**DEPARTMENT OF AGRICULTURE**

**Food Safety and Inspection Service**

**9 CFR Parts 304, 308, 310, 320, 327, 381, 416, and 417**

**[Docket No. 93–016F]**

**RIN 0583–AB69**

# Pathogen Reduction; Hazard Analysis and Critical Control Point (HACCP) Systems

**AGENCY:** Food Safety and Inspection Service, USDA.

**ACTION:** Final rule with request for comments.

**SUMMARY:** The Food Safety and Inspection Service (FSIS) is establishing requirements applicable to meat and poultry establishments designed to reduce the occurrence and numbers of pathogenic microorganisms on meat and poultry products, reduce the incidence of foodborne illness associated with the consumption of those products and provide a new framework for modernization of the current system of meat and poultry inspection. The new regulations (1) require that each establishment develop and implement written sanitation standard operating procedures (Sanitation SOP's); (2) require regular microbial testing by slaughter establishments to verify the adequacy of the establishments' process controls for the prevention and removal of fecal contamination and associated bacteria; (3) establish pathogen reduction performance standards for *Salmonella* that slaughter establishments and establishments producing raw ground products must meet; and (4) require that all meat and poultry establishments develop and implement a system of preventive controls designed to improve the safety of their products, known as HACCP (Hazard Analysis and Critical Control Points).

**DATES:** *Effective Date:* July 25, 1996, however these rules are not applicable until the dates listed below.

Applicability dates: (1) The HACCP regulations set forth in 9 CFR Part 417 and related provisions set forth in 9 CFR 304, 327, and 381 parts will be applicable as follows:

- In large establishments, defined as all establishments with 500 or more employees, on January 26, 1998.
- In smaller establishments, defined as all establishments with 10 or more employees but fewer than 500, on January 25, 1999.
- In very small establishments, defined as all establishments with fewer than 10 employees *or* annual sales of less than $2.5 million, on January 25, 2000.

(2) The Sanitation SOP's regulations set forth in 9 CFR 416 will be applicable on January 27, 1997.

(3) The *E. coli* process control testing regulations set forth in 9 CFR 310.25(a) and 381.94(a) will be applicable on January 27, 1997.

(4) The *Salmonella* pathogen reduction performance standards regulations set forth in 9 CFR 310.25(b) and 9 CFR 381.94(b) will be applicable simultaneously with applicability dates for implementation of HACCP.

*Comments:* Comments on specified technical aspects of the final regulations must be received on or before September 23, 1996. With respect to the HACCP final regulations, FSIS requests comments by November 22, 1996.

**ADDRESSES:** Submit one original and two copies of written comments to: FSIS Docket Clerk, DOCKET #93–016F, U.S. Department of Agriculture, Food Safety and Inspection Service, Room 4352, 1400 Independence Avenue, S.W., Washington, DC 20250–3700. All comments submitted on this rule will be available for public inspection in the Docket Clerk's Office between 8:30 a.m. and 1:00 p.m., and 2:00 p.m. and 4:30 p.m., Monday through Friday. The references and baseline surveys cited in this document are available for inspection in the FSIS Docket Room.

**FOR FURTHER INFORMATION CONTACT:** (1) GENERAL: Dr. Judith A. Segal, Director, Policy, Evaluation, and Planning Staff, (202) 720–7773; (2) MICROBIAL TESTING: Patricia F. Stolfa, Acting Deputy Administrator, Science and Technology, (202) 205–0699.

**SUPPLEMENTARY INFORMATION:**

Obtaining Copies of This Document:

An electronic version of this document is available on the Internet from the Federal Register at www.access.gpo.gov/su__docs/aces/aces140.html. Paper or diskette copies of this document may be ordered from the National Technical Information Service (NTIS), U.S. Department of Commerce, 5285 Port Royal Road, Springfield, VA 22161. For a complete copy of this document orders must reference NTIS accession number PB96–177613 (paper copy) and PB96–502166 (disk copy). For a copy of the preamble and rule, the individual appendices, and the impact assessment reference the following NTIS accession numbers: PB96–177621 (preamble and rule only), PB96–177639 (Appendix A), PB96–177647 (Appendix B), PB96–177654 (Appendix C), PB96–177662 (Appendix D), PB96–177670 (Appendix E), PB96–177688 (Appendix F), PB96–177696 (Appendix G), and PB96–177704 (impact assessment). For telephone orders or more information on placing an order, call NTIS at (703) 487–4650 for regular service or (800) 553–NTIS for rush service. Dial (703) 321–8020 with a modem or Telnet fedworld.gov to access this document electronically for ordering and downloading via FedWorld. For technical assistance to access FedWorld, call (703) 487–4608.

Table of Contents

I. Background
- Overview of FSIS Food Safety Goal and Strategy
- FSIS Regulatory Proposals
- FSIS Regulatory and Inspection Reform Plans
- Change Within FSIS
- The FSIS Pathogen Reduction/HACCP Rulemaking Process
- Seven Information Briefings
- Three Scientific and Technical Conferences
- Public Hearing
- Federal-State Relations Conference
- Scoping Session and Six Issue-Focused Meetings
- Food Safety Forum
- Farm-to-Table Strategy
- General Overview of the Comments and the Final Rule
- HACCP and Performance Standards
- Sanitation SOP's, Antimicrobial Treatments, and Cooling Requirements for Raw Meat and Poultry Products
- Timetable for Implementation
- Federally Inspected Establishments
- State-inspected Establishments
- Foreign-inspected Establishments
- Implementation Conferences
- Request for Comments

II. Hazard Analysis and Critical Control Point Systems
- Overview of Final Rule
- History and Background of HACCP
- The Seven HACCP Principles
- HACCP and the FSIS Food Safety Strategy
- Preparing for HACCP Implementation
- Inspection under HACCP
- Implementation Schedule
- Small Business Issues
- Training Considerations
- Mandatory versus Voluntary HACCP
- HACCP from Farm-to-Table
- Total Quality Control (TQC) Establishments and HACCP
- Freedom of Information Act Concerns
- FSIS Enforcement Authority and Whistleblower Protection
- Enforcement and Due Process
- The Final Rule
- Reorganization of HACCP Regulatory Text
- HACCP Systems as a Condition of Receiving Inspection
- Definitions
- Hazard Analysis and HACCP Plan
- Corrective Actions
- Validation, Verification, and Reassessment
- Reassessment
- FSIS Verification
- Records

Training
Adequacy of HACCP Plans
III. Sanitation Standard Operating Procedures
The Proposed Rule
The Final Rule
Comments and Responses
General
Development of Sanitation SOP's
Maintaining Sanitation SOP's
Recordkeeping
''Layering''
Role of Inspectors
Relation to HACCP
Training
Pre-operation Sanitation Inspection
Implementation Date
IV. Microbiological Performance Criteria and Standards
Summary of Proposal
Role of Microbiological Performance Criteria and Standards in FSIS Food Safety Strategy
Overview of Final Rule
Process Control Verification Performance Criteria
Pathogen Reduction Performance Standards
Process Control Verification: *E. coli* Performance Criteria and Testing
Rationale for Using *E. coli* Tests to Verify Process Control
Use of Baseline Values to Establish *E. coli* Performance Criteria
Establishment of *E. coli* Performance Criteria to Verify Process Control
Sampling Frequency for *E. coli* Testing
Sampling and Analytical Methodology
Recordkeeping
Use of *E. coli* Test Results by Establishments
Use of *E. coli* Test Results by FSIS
Implementation Timetable
Request for Comments
Pathogen Reduction Performance Standards
Rationale for Selecting *Salmonella*
Basis for Performance Standards and Plans for Future Adjustments
Determining Compliance with the Standard
FSIS Testing Strategy
FSIS Testing Methods
FSIS Enforcement Strategy
Implementation Timetable for Pathogen Reduction Performance Standards
Response to Comments
The Indicator Organism
Frequency and Cost of Testing
Legal Authority for Testing Requirement
Performance Standards for Process Control
Basis for Target Levels
Methodology for Meeting Targets
Sample Size
Testing Methodology
Role of Inspectors
Laboratories
Alternative Sampling under HACCP
Relationship to HACCP
V. Other Issues and Initiatives
Antimicrobial Treatments
Cooling and Chilling Requirements for Raw Meat and Poultry
International Trade
Recordkeeping and Record Retention
Finished Product Standards for Poultry Carcasses
VI. Economic Impact Analysis and Executive Orders
Executive Order 12866
HACCP-based Regulatory Program Produces Net Benefit to Society
Market Failure Justifies Regulation of Pathogens
Regulatory Alternatives
Unfunded Mandates Reform Act
Regulatory Flexibility Act
Executive Order 12778
Paperwork Requirements
Sanitation Standard Operating Procedures (Sanitation SOP's)
Time and Temperature
Microbiological Testing
HACCP
VII. Final Rules
VIII. Appendix A—Guidelines for Developing a Standard Operating Procedure for Sanitation (Sanitation SOP's) in Federally Inspected Meat and Poultry Establishments
IX. Appendix B—Model of a Standard Operating Procedure for Sanitation
X. Appendix C—Guidebook for the Preparation of HACCP Plans
XI. Appendix D—Hazards and Preventive Measures Guide
XII. Appendix E—FSIS Sample Collection Guidelines and Procedure for Isolation and Identification of *Salmonella* from Raw Meat and Poultry Products
XIII. Appendix F—Guidelines for *Escherichia coli* Testing for Process Control Verification in Cattle and Swine Slaughter Establishments
XIV. Appendix G—Guidelines for *Escherichia coli* Testing for Process Control Verification in Poultry Slaughter Establishments
XV. Supplement—Final Regulatory Impact Assessment

## I. Background

### *Overview of FSIS Food Safety Goal and Strategy*

The mission of the FSIS is to ensure that meat, poultry, and egg products are safe, wholesome, and properly marked, labeled, and packaged. Regarding meat and poultry, FSIS currently carries out its food safety responsibility primarily by managing an inspection program within meat and poultry slaughter and processing establishments. This program relies heavily on FSIS inspectors to detect and correct establishment sanitation and food safety problems.

Recent outbreaks of foodborne illness and studies conducted over the past decade by the National Academy of Sciences (NAS), the U.S. General Accounting Office (GAO), and FSIS itself have established the need for fundamental change in the FSIS meat and poultry inspection program to improve food safety, reduce the risk of foodborne illness in the United States, and make better use of the Agency's resources.

FSIS has embarked on a broad effort to bring about the necessary changes in its program. In the preamble to the ''Pathogen Reduction; Hazard Analysis Critical Control Point (HACCP) Systems'' proposed rule, published in the Federal Register of February 3, 1995 (Docket #93–016P, 60 FR 6774; hereafter ''Pathogen Reduction/HACCP proposal''), FSIS traced the origins of its current program, described today's food safety challenges, and outlined a new food safety strategy for meat and poultry products. In that document, FSIS proposed new regulations to mandate adoption within meat and poultry establishments of HACCP, a science-based process control system for food safety.

The HACCP requirement and other food safety measures proposed by FSIS in the Pathogen Reduction/HACCP proposal were motivated by the critical need to fill a gap in the current regulation and inspection system and the lack of adequate measures to address the problem of pathogenic microorganisms on raw meat and poultry products.

Such bacteria, including *Salmonella, E. coli* O157:H7, *Campylobacter* and *Listeria monocytogenes,* are significant food safety hazards associated with meat and poultry products. FSIS estimates that the contamination of meat and poultry products with these bacteria results annually in as many as 4,000 deaths and 5,000,000 illnesses.

FSIS stated the goal of its food safety strategy and proposed Pathogen Reduction/HACCP regulations as follows: FSIS believes its food safety goal should be to reduce the risk of foodborne illness associated with the consumption of meat and poultry products to the maximum extent possible by ensuring that appropriate and feasible measures are taken at each step in the food production process where hazards can enter and where procedures and technologies exist or can be developed to prevent the hazard or reduce the likelihood it will occur (60 FR 6785).

In establishing this goal, FSIS recognized that no single technological or procedural solution exists for the problem of foodborne illness and that the Agency's food safety goal would be achieved only through continuous efforts to improve hazard identification and prevention.

The food safety strategy FSIS outlined in the Pathogen Reduction/HACCP proposal included the following major elements: (1) provisions for systematic prevention of biological, chemical, and physical hazards through adoption by meat and poultry establishments of science-based process control systems;

(2) targeted efforts to control and reduce harmful bacteria on raw meat and poultry products; (3) adoption of food safety performance standards that provide incentives for innovation to improve food safety and to provide a measure of accountability for achieving acceptable food safety results; (4) removal of unnecessary regulatory obstacles to innovation; and (5) efforts to address hazards that arise throughout the food safety continuum from farm to table.

FSIS also stressed, as a central theme of its strategy, a need to clarify and strengthen the responsibilities of establishments for maintaining effective sanitation, following sound food safety procedures, and achieving acceptable food safety results.

*FSIS Regulatory Proposals*

FSIS proposed HACCP as the organizing structure for its food safety program because HACCP is the optimal framework for building science-based process control to prevent food safety hazards into food production systems. HACCP also focuses FSIS inspection on the most significant hazards and controls.

To complement HACCP, FSIS proposed to establish, for the first time, food safety performance standards for pathogenic microorganisms on raw meat and poultry products, initially as ''interim'' targets for the reduction of *Salmonella* contamination of raw carcasses and raw ground meat and poultry products. These performance standards would measure whether HACCP systems are working effectively to address food safety hazards. FSIS proposed to require that establishments conduct daily microbial testing for *Salmonella* to verify achievement of the ''targets.''

FSIS also proposed three near-term measures to speed progress on controlling and reducing pathogenic microorganisms on raw products during the proposed three year phase-in of HACCP. These proposed measures were: (1) a requirement that all establishments adopt and implement sanitation standard operating procedures (Sanitation SOP's); (2) a requirement that all slaughter establishments use at least one effective antimicrobial treatment to reduce harmful bacteria; and, (3) standards for cooling red meat carcasses to prevent the growth of harmful bacteria.

*FSIS Regulatory and Inspection Reform Plans*

In the Pathogen Reduction/HACCP proposal, FSIS acknowledged that it must do more than mandate HACCP and other new regulatory requirements in order to achieve its food safety goals. FSIS must also reform its existing regulations, policies, and directives to be consistent with HACCP principles and with the Agency's intention to rely more heavily on performance standards. Current FSIS regulatory requirements and procedures are generally highly detailed and prescriptive. They specify, for example, precise cooking time-and-temperature combinations for many products. Current regulations often assign to FSIS responsibility for the means used by establishments to produce safe food in a sanitary environment (e.g., FSIS requires that facility blueprints and equipment receive Agency approval before use).

As part of its regulatory reform initiative, FSIS has undertaken the conversion of current command-and-control regulations to performance standards. Command-and-control regulations, and the Inspection System Guide that FSIS inspectors use to enforce those regulations, resulted from the perceived need to achieve uniformity among federally inspected meat and poultry establishments. Technological advances introduce a new imperative, however. If establishments are to innovate, using new technologies to improve food safety, they cannot be impeded by a one-size-fits-all regulatory system. Under contemporary conditions, affording establishments the flexibility to make establishment-specific decisions outweighs the advantages of uniformly applicable rules. Recognizing this, FSIS is changing inspection to meet the needs of the new regulatory system.

Under the command-and-control-based system, the inspector assumed responsibility for ''approving'' production-associated decisions. Under the new system, industry assumes full responsibility for production decisions and execution. FSIS, having set food safety standards, monitors establishments' compliance with those standards and related requirements and under HACCP, verifies process control and pathogen reduction and control. The number of inspection tasks will be reduced, so that inspectors can focus more attention on areas of greatest risk in the meat or poultry production system within each establishment.

With the shift to HACCP and greater reliance on performance standards, establishments will be afforded greater autonomy in decision-making affecting their own operations and, in return, be expected to take responsibility for setting up site- and product appropriate process control measures to achieve FSIS-established performance standards. This approach, which is intended to increase both the incentives and the flexibility establishments need to innovate and improve food safety, requires a complete review and overhaul of the ''command-and-control'' requirements and procedures in current FSIS regulations, policies, and directives.

HACCP-based food safety strategies and performance standards also require important changes in FSIS's approach to inspection. FSIS intends to clarify the respective responsibilities of FSIS inspectors and establishment management.

In the Federal Register of December 29, 1995 (60 FR 67469), FSIS published an advance notice of proposed rulemaking (ANPR) and additional rulemaking proposals describing the Agency's strategy for the regulatory and inspectional reform required to achieve the changes required for consistency with HACCP. These changes will be accomplished before establishments are required to implement HACCP.

*Change Within FSIS*

Finally, achieving the Agency's food safety goals will require substantial change within FSIS itself, as the roles of establishments and Federal inspectors are realigned to accord with the HACCP philosophy. The scope of FSIS's food safety activities will also extend beyond slaughter and processing establishments to include new preventive approaches to hazards that occur during transportation, distribution, and retail, restaurant or food service sale of meat and poultry products.

This expansion of the Agency's roles will require substantial training and redeployment of employees, and will place an enormous strain on agency resources. To meet these challenges, FSIS has conducted a top-to-bottom review of its regulatory roles, resource allocation and organizational structure. Reports prepared by FSIS employees containing analysis and recommendations on these topics were described and made available for public comment in the Federal Register of September 12, 1995 (60 FR 47346). FSIS will be making the fundamental internal changes required to successfully carry out its HACCP-based farm-to-table food safety strategy. These changes within FSIS, which include a major reorganization of the Agency, will ensure that FSIS is using its resources to improve food safety consistent with its new regulatory framework.

*The FSIS Pathogen Reduction/HACCP Rulemaking Process*

Recognizing that HACCP and other regulatory requirements contained in the Pathogen Reduction/HACCP proposal are part of a broad overhaul of the FSIS regulatory program, and involve important changes in the responsibilities of meat and poultry establishments, FSIS has conducted a thorough and interactive rulemaking process. The Agency's goal has been to provide many opportunities for submission by the public of both written and oral comments and for interchange between FSIS and interested parties on the many major policy and technical issues involved in the reform of meat and poultry inspection.

The initial comment period was 120 days, which FSIS subsequently extended for an additional 30 days and later reopened for another 95 days. During this period, FSIS held seven informational briefings, three scientific and technical conferences, a two-day public hearing, a scoping session and six issue-focused public meetings, a Federal-State conference, and a Food Safety Forum. Extensive oral comments were transcribed and included with written comments in the record of this rulemaking. A brief summary of the various public meetings follows.

*Seven Information Briefings*

Initially, FSIS held informational briefings in seven cities across the country to explain the Pathogen Reduction/HACCP proposal to the public and to answer questions. A panel of FSIS officials and scientists provided information on the proposed regulations and answered questions. These briefings were not intended to solicit comments, but to help interested parties prepare themselves to comment on the Pathogen Reduction/HACCP proposal. These briefings were held:

March 7, 1995; Oakland, California
March 14, 1995; Dallas, Texas
March 16, 1995; Chicago, Illinois
March 21, 1995; Atlanta, Georgia
March 23, 1995; New York, New York
March 30, 1995; Washington, D.C.
May 22, 1995; Kansas City, Kansas

The Kansas City session included an informational briefing and public meeting for owners and representatives of small meat and poultry establishments and other affected small businesses to discuss the Pathogen Reduction/HACCP proposal. At the meeting, many small business owners said that the Pathogen Reduction/HACCP proposal might eventually inhibit small businesses from competing with larger entities because the resulting additional costs could be borne more easily by larger companies. Three Directors of State Meat and Poultry Inspection Programs stated their views that the Pathogen Reduction/HACCP proposal might have a negative impact upon the small businesses for which they provide inspection. Consumers requested that FSIS base its decisions on the Pathogen Reduction/HACCP proposal not on industry impacts, but on what will best protect the public.

*Three Scientific and Technical Conferences*

FSIS held three scientific and technical conferences to foster the development of beneficial new food safety technologies, to fill gaps in scientific knowledge, and to ensure that the Agency had the best scientific information available for the rulemaking. Concerned that the typical rulemaking process would not elicit this information, the Agency invited experts on relevant subjects to the meetings, which were open to all interested parties.

The first conference, titled ''New Technology to Improve Food Safety,'' was held April 12–13, 1995, in Chicago, Illinois. This conference explored the available technology that might be introduced into the production and manufacturing of meat and poultry products to control *E. coli* O157:H7 and other harmful pathogens in the food supply. Participants included members of industry, academia, research organizations, and consumers. Additionally, Government representatives from non-food Federal regulatory agencies discussed technology development and transfer in other industries. FSIS discussed how it emphasized and encourages the approval and introduction of new technologies.

The second conference, titled ''The Role of Microbiological Testing in Verifying Food Safety,'' was held May 1–2, 1995, in Philadelphia, Pennsylvania. This meeting explored scientific issues related to the use of microbiological testing for verifying meat and poultry safety. Six persons were invited to present discussions relating to the use and limitations of microbiological testing in ensuring food safety. Twelve representatives from academia, consumer groups, industry, and exporting countries also presented talks on the concepts and methods for microbiological testing that appeared in the proposed regulation. During the comment period following the presentations, 15 people commented on the subjects covered at the meeting and in the proposed regulation.

The third conference, titled ''An Evaluation of the Role of Microbiological Criteria in Establishing Food Safety Performance Standards in Meat and Poultry Products,'' was held May 18–19, 1995, in Washington, D.C. It explored the use of microbiological criteria to establish food safety performance standards for meat and poultry products. Participants generally agreed that HACCP is an effective approach to controlling microbiological hazards in foods, and that government and industry must work together to establish microbiological criteria, sampling plans and training for food safety performance standards. Most commenters agreed that the use of an indicator organism is effective to facilitate and monitor the reduction of microbiological contamination in meat and poultry products. Diverse opinions were expressed on which indicator organisms should be chosen for each type of product.

*Public Hearing*

On May 30 and 31, 1995, FSIS held a public hearing in Washington, D.C., on the proposed rule.

Thirty-seven persons presented comments at the 2-day hearing. Issues and viewpoints varied greatly. For instance, requests were made to keep carcass-by-carcass inspection, but it was suggested that organoleptic inspection is outdated. While there was support for a HACCP system, many suggestions were made for changes in specific parts of the proposal, particularly microbial testing and antimicrobial treatments. Several commenters described their personal experiences with foodborne illness. Small business owners and their representatives commented on the potential financial burdens that might result from the Pathogen Reduction/HACCP proposal.

*Federal-State Relations Conference*

As part of the annual meeting of Directors of State Meat and Poultry Inspection Programs, FSIS held a ''Federal-State Relations Conference,'' August 21–23, 1995, in Washington, D.C. This meeting, in which the National Association of State Departments of Agriculture participated, provided an opportunity for representatives from State government to engage in an open exchange with senior USDA officials on the Pathogen Reduction/HACCP proposal. In addition to State Directors, the meeting included representatives from State Departments of Agriculture, State Health Departments and local food safety enforcement agencies; additionally, the Food and Drug Administration (FDA)

and the Association of Food and Drug Officials were participants. These parties recognized a need to better protect the public by optimizing the use of available resources. State agency representatives discussed the need for better coordination within their own States and with the Federal Government to prevent foodborne illness outbreaks. Improved food handling education for industry and consumers was seen as one of the primary ways to improve farm-to-table food safety.

*Scoping Session and Six Issue-Focused Meetings*

By late August, FSIS had received more than 6,800 comments on the Federal Register notice, in addition to the input obtained at the meetings and the hearing. All this information raised new issues and modified Agency thinking in some areas. In order to share new information and current thinking with its constituencies, FSIS held six issue-focused public meetings on the proposed rule and accepted written comments from those unable to attend. The meetings were announced in the Federal Register (60 FR 45380; Thursday, August 31, 1995) and held at USDA, Washington, D.C., on September 13, 14, 15, 27, 28, and 29, 1995.

FSIS framed an agenda for the meetings and provided issue papers describing current Agency thinking on the proposed rule. Before the issue-focused public meetings, FSIS held a public scoping session on August 23, 1995, to ensure that all parties had an opportunity to suggest issues for the agenda.

The issue papers provided at the six issue-focused public meetings were published in the Federal Register (60 FR 54450; Tuesday, October 24, 1995).

*Food Safety Forum*

A Food Safety Forum chaired by Secretary Glickman was held on November 8, 1995 to discuss food safety reform issues beyond the specific issues raised by the proposed Pathogen Reduction/HACCP proposal. The forum agenda included topics such as: (1) whether legislative changes to the Federal Meat Inspection Act (FMIA) and the Poultry Products Inspection Act (PPIA) were needed; (2) how FSIS could improve food safety by organizational change, regulatory reform, reliance on user fees, effective resource allocation and other means; (3) cooperation between USDA and State inspection programs; and (4) government and private sector roles in consumer education regarding safe food handling practices. A transcript of the forum has been included in the record for this rulemaking.

*Farm-to-Table Strategy*

In the preamble to its Pathogen Reduction/HACCP proposal, FSIS presented a strategy for the control of food safety hazards throughout the continuum of animal production and slaughter, and the processing, distribution, and sale of meat and poultry products. FSIS has historically focused on the manufacturing of meat and poultry products through its inspection program, but the Agency's public health mandate requires that the Agency also consider pre- and post-processing hazards as part of a comprehensive strategy to prevent foodborne illness.

This farm-to-table food safety strategy is founded on three principles:

- Hazards that could result in foodborne illness arise at each stage in the farm-to-table continuum: animal production and slaughter, and the processing, transportation, storage and retail, restaurant or food service sale of meat and poultry products. Each stage presents hazards of pathogen and other contamination and each provides opportunities for minimizing the effect of those hazards.
- Those in control of each segment of the farm-to-table continuum bear responsibility for identifying and preventing or reducing food safety hazards that are under their operational control.
- The Agency's public health mandate requires that it address foodborne illness hazards within each segment of the food production chain and implement or encourage preventative strategies that improve the whole system.

FSIS remains committed to a farm-to-table food safety strategy based on these principles. To address hazards arising within slaughter and processing establishments, FSIS proposed and is adopting in this rule significant new regulatory measures. Improving food safety before the animals reach slaughter establishments will require a different approach. The preamble to the Pathogen Reduction/HACCP proposal stated that FSIS will be cooperating with animal producers, scientists in academia, the Animal and Plant Health Inspection Service and other government agencies to develop and foster food safety measures that can be taken on the farm and through marketing channels to decrease public health hazards in animals presented for slaughter. Within this context, the voluntary application of food safety assurance programs based on HACCP principles can be useful in establishing risk reduction practices on the farm and through intermediate marketing stages to control and reduce pathogen hazards at slaughter.

FSIS expects, within the limits of available resources, to serve as a facilitator and coordinator of research and other activities designed to encourage development and implementation of animal production technologies and practices that can improve food safety. FSIS also intends to offer its expertise to assist State health and agricultural officials, when requested, during outbreak investigations of foodborne illnesses to learn more about potential risk factors. FSIS does not intend nor is FSIS authorized, to mandate production practices on the farm, but does expect that continued public concern about foodborne pathogens and adoption of HACCP and food safety performance standards within slaughter and processing establishments will increase incentives for improving food safety practices at the animal production level.

The post-processing transportation, storage, and retail, restaurant or food service sectors are also important links in the chain of responsibility for food safety. In these areas, FDA and State and local governments share authority and responsibility for oversight of meat and poultry products outside of official establishments. FSIS and FDA are collaborating in the development of standards governing the safety of potentially hazardous foods, including meat and poultry, eggs, and seafood, during transportation and storage, with particular emphasis on proper cooling to minimize the growth of pathogenic microorganisms, and on disclosure of prior cargoes in transport vehicles. This effort will be discussed in a forthcoming advance notice of proposed rulemaking.

In the retail, restaurant and food service areas, FSIS and FDA are working in concert with State and local food regulatory officials to foster adoption of updated, uniform, science-based standards, including mandates for HACCP process controls for high-risk processing and packaging operations. State and local authorities have assumed primary responsibility for food safety oversight of retail, restaurant and food service operations, but FSIS and FDA, working through the Conference on Food Protection and other collaborative mechanisms, provide expertise and leadership to support local authorities and foster development of sound food safety standards and practices nationwide. FSIS is cooperating with FDA to update the Food Code, a set of model ordinances recommended for adoption by the

States, to ensure meat and poultry safety is adequately addressed in retail, restaurant and food service settings.

Even as progress is made in reducing contamination of food by harmful bacteria and other safety hazards at the production, processing and subsequent commercial stages of the farm-to-table continuum, it will remain critically important that individual consumers follow safe food handling practices. Proper storage, preparation, and cooking of meat and poultry products are essential to achieving the goal of reducing the risk of foodborne illness to the maximum extent possible. FSIS intends to augment its food handler and consumer education efforts by expanding its collaboration with the meat and poultry industry, other government agencies, consumer and public interest groups, educators, and the media to effectively develop and deliver food safety education and information to the public.

The HACCP requirements and other regulations FSIS is adopting in this final rule will ensure that inspected establishments are taking appropriate measures to reduce hazards at critical stages where the risk of initial contamination is greatest. The public health benefits of these measures, however, are only a part of a comprehensive food safety strategy that seeks to minimize hazards throughout the farm-to-table continuum.

*General Overview of the Comments and the Final Rule*

HACCP and Performance Standards

The FSIS proposal to require adoption of HACCP in meat and poultry establishments was widely endorsed by comments from large and small businesses, the scientific and public health communities, consumers, and public interest organizations. Commenters strongly supported the concept that meat and poultry establishments should systematically build science-based food safety measures into their production processes following the seven HACCP principles developed by the National Advisory Committee on Microbiological Criteria for Food (NACMCF). Although many commenters requested clarification of how FSIS intends to implement HACCP and conduct inspection under HACCP, the principal critical comments concerned costs and the practicality of using HACCP in very small establishments. FSIS is adopting the HACCP requirements, based on the NACMCF principles, essentially as proposed.

From a food safety standpoint, the most important objective of this rulemaking is to build into food production processes, and into the system of FSIS regulation and oversight, effective measures to reduce and control harmful bacteria on raw meat and poultry products. This will not by itself solve the problem of foodborne illness associated with meat and poultry products. Effective measures are needed throughout the farm-to-table continuum, but this rulemaking will fill the most critical gap in the current system of meat and poultry inspection. While products sold in cooked or otherwise ready-to-eat forms are currently subject to controls and regulatory standards designed to eliminate harmful bacteria, products sold raw are not currently subject, as a general matter, to any such controls or standards.

FSIS has concluded that HACCP-based process control, combined with appropriate food safety performance standards, is the most effective means available for controlling and reducing harmful bacteria on raw meat and poultry products. HACCP provides the framework for industry to set up science-based process controls that establishments can validate as effective for controlling and reducing harmful bacteria. Performance standards tell establishments what degree of effectiveness their HACCP plans will be expected to achieve and provide a necessary tool of accountability for achieving acceptable food safety performance. Science-based process control, as embodied in HACCP, and appropriate performance standards are inextricably intertwined in the Agency's regulatory strategy for improving food safety. Neither is sufficient by itself, but, when combined, they are the basis upon which FSIS expects significant reductions in the incidence and levels of harmful bacteria on raw meat and poultry products and, in turn, significant reductions in foodborne illness.

The proposed interim targets for pathogen reduction based on *Salmonella* generated widely diverse comments. Commenters supported the goal of pathogen reduction, and many recognized some role for microbial testing and the need for a microbial reduction target or performance standard. Some commenters argued that the proposed testing regimen (a single sample per species per day) was inadequate for its purpose in large establishments, while others argued it was too burdensome in small establishments. Some commenters specifically supported the proposed *Salmonella* reduction targets and the daily testing requirements. Many, however, criticized the proposed testing requirements and considered *Salmonella* testing less useful than generic *E. coli* testing as an indicator of whether process controls in slaughter establishments are effectively preventing fecal contamination, the primary pathway for pathogen contamination. At the scientific conference on the role of microbial testing held in Philadelphia, broad support also was expressed for using generic *E. coli* rather than *Salmonella* as a process control indicator.

Based on public comments, FSIS has modified its approach to establishing microbial performance standards. FSIS believes that testing for generic *E. coli* is the appropriate and necessary means by which meat and poultry slaughter establishments must verify their process controls. FSIS reviewed written comments received on the original proposal and comments made at the scientific conferences and public meetings, as well as available scientific data, and has decided to require slaughter establishments to conduct testing for generic *E. coli* to verify process controls. Establishments will be required to test for *E. coli* at a frequency that takes into account their volume of production. FSIS is seeking additional scientific and economic data that may help to further improve the *E. coli* testing protocols.

FSIS is also establishing performance criteria based on national microbiological baseline surveys. The criteria are not regulatory standards but rather provide a benchmark for use by slaughter establishments in evaluating *E. coli* test results. Test results that do not meet the performance criteria will be an indication that the slaughter establishment may not be maintaining adequate process control for fecal contamination and associated bacteria. Such results will be used in conjunction with other information to evaluate and make appropriate adjustments to ensure adequate process control for fecal contamination and associated bacteria.

FSIS is also establishing pathogen reduction performance standards for *Salmonella* that will require all slaughter establishments to reduce the incidence of *Salmonella* contamination of finished meat and poultry carcasses below the national baseline prevalence as established by the most recent FSIS national microbiological baseline data for each major species. FSIS will conduct *Salmonella* testing in slaughter establishments to detect whether they are meeting the pathogen reduction performance standards, and will require corrective action or take regulatory

action, as appropriate, to ensure establishments are meeting the pathogen reduction standards.

Pathogen-specific performance standards for raw products are an essential component of the FSIS food safety strategy because they provide a direct measure of progress in controlling and reducing the most significant hazards associated with raw meat and poultry products. The *Salmonella* standards being established in this final rule, which are based on the current national baseline prevalence of *Salmonella* (expressed as a percentage of contaminated carcasses), are a first step in what FSIS expects to be a broader reliance in the future on pathogen-specific performance standards. FSIS plans to repeat its baseline surveys and collect substantial additional data through other means and, on that basis, adjust the *Salmonella* performance standards and possibly set standards for additional pathogens, as appropriate. Also, FSIS will continue to explore establishing pathogen-specific performance standards based on the levels of contamination (i.e., the number of organisms) on a carcass. Future FSIS efforts on such performance standards will reflect the fact that achieving the food safety goal of reducing foodborne illness to the maximum extent possible will require continuous efforts and improvement over a substantial period.

Sanitation SOP's, Antimicrobial Treatments, and Cooling Requirements for Raw Meat and Poultry Products

Comments generally supported the objectives of the three near-term measures for raw meat and poultry products proposed by FSIS, Sanitation SOP's, antimicrobial treatments, and carcass cooling standards, and most commenters agreed that Sanitation SOP's should be a required element of any meat and poultry establishment's food safety program. Many commenters objected, however, to FSIS mandated antimicrobial treatments in slaughter establishments and carcass cooling standards for red meat prior to the implementation of HACCP. Although most comments generally agreed that antimicrobial treatments would play an important role in many slaughter establishments' HACCP plans, and that proper carcass cooling would be an essential part of any HACCP plan for raw meat and poultry products, these commenters argued that mandating a particular approach to antimicrobial treatments or carcass cooling would be inconsistent with the HACCP concept that establishment management is responsible for designing a system of controls appropriate for each establishment. They also argued that mandating antimicrobial treatments was unnecessary if establishments were required to meet pathogen reduction performance standards. Similarly, with respect to the proposed requirement that establishments cool red meat carcasses following specific cooling rate standards prescribed by FSIS, commenters argued that HACCP, reinforced by performance standards, would ensure proper carcass cooling. Many commenters said that the specific time-and-temperature requirements proposed by FSIS were often not feasible, posed worker safety concerns, and would divert effort and resources that could be used more productively in preparing for implementation of HACCP.

Based on the comments, FSIS has reconsidered its approach to the proposed near-term measures. FSIS believes that its regulatory program and the food safety efforts of the meat and poultry industry should be focused on making a transition to HACCP as rapidly and effectively as possible and that FSIS should not mandate any near-term measures that would not be expected to continue as mandatory elements of a HACCP-based system.

FSIS has decided to adopt final rules that mandate Sanitation SOP's. Good sanitation is a critical foundation for HACCP, and Sanitation SOP's are an essential element of the FSIS effort to more clearly define establishment and inspector responsibilities, and better focus both the establishment management and FSIS on those elements of daily sanitation that relate most directly to the risk of product contamination. Near-term implementation of Sanitation SOP's will facilitate the transition to HACCP.

FSIS has decided not to mandate antimicrobial treatments in slaughter establishments. The Agency expects that antimicrobial treatments will play an important role in the design of slaughter HACCP plans as establishments institute controls that are effective in reducing pathogens and meeting FSIS performance standards. As a general matter, however, FSIS does not intend to mandate the specific controls that establishments must adopt in their HACCP plans. In the case of antimicrobial treatments, FSIS believes that improvement in food safety would be better served by providing establishments the incentive and flexibility to incorporate antimicrobial treatments in any manner they judge most effective for their operations to meet FSIS-established performance standards for reducing bacterial contamination.

With respect to carcass cooling, FSIS continues to believe that, in a HACCP environment, appropriate performance standards are needed for the cooling of carcasses and raw meat and poultry products to prevent the growth of harmful bacteria. After consideration of the comments, FSIS has concluded, however, that the specific time-and-temperature combinations proposed by FSIS were too restrictive and that a scientifically sound and effective strategy for preventing the growth of pathogens through proper cooling must apply not only within, but also beyond, FSIS-inspected establishments. Thus, instead of including requirements for carcass cooling in this final rule, FSIS intends to extend this rulemaking to consider alternative approaches to performance standards for cooling within establishments. Concurrently, FSIS also intends to develop rulemaking covering the adoption of standards for cooling of raw products during transportation, storage, and retail, restaurant or food service sale. FSIS anticipates adopting performance standards designed to minimize the growth of harmful bacteria on raw products that establishments will be required to meet through their HACCP plans. FSIS will announce in a future issue of the Federal Register a three-day public conference to gather further scientific information and public comment on these subjects.

*Timetable for Implementation*

Federally Inspected Establishments

FSIS proposed an implementation timetable that would have phased in the near-term measures and HACCP over a period of time beginning 90 days and ending three years after publication of the final rule. Sanitation SOP's and the other near-term measures, as well as the proposed microbial sampling by establishments for *Salmonella*, were to begin 90 days after publication. Slaughter establishments were to be held accountable for meeting the *Salmonella* targets two years after publication.

FSIS proposed to phase in HACCP over a one to three-year period, primarily on a process-by-process basis. For example, raw ground products would be subject to the HACCP requirements one year after publication of the final rule, while all slaughter establishments would be required to start HACCP thirty months (2½ years) after publication of the final rule. However, FSIS proposed that establishments with annual sales of less than $2.5 million be given three years to

comply with the HACCP requirement, regardless of the processes they run.

Some commenters said the proposed implementation timetable was too slow, considering the seriousness of the food safety issues involved and the familiarity with HACCP that already exists among many in the industry. Other commenters pointed out that many larger establishments have already adopted HACCP. Some said the Pathogen Reduction/HACCP proposal placed excessive burdens on smaller establishments, which were said to be less prepared technically and financially to carry out HACCP. Wide support was voiced for implementing HACCP as promptly as practicable, taking into account the diversity of businesses involved and the different levels of readiness for HACCP.

FSIS has considered these comments and has also re-evaluated the proposed timetable for implementation of all requirements discussed above in light of preparations FSIS will itself have to make to implement HACCP, including the training of inspection and other agency employees. FSIS believes it is important to bring the meat and poultry supply under HACCP-based process control and to implement other elements of its food safety strategy as rapidly as possible. It is also important to have a timetable that is realistic for implementing this fundamental transformation in how FSIS regulates meat and poultry establishments. FSIS is modifying the timetable for implementation in a way that achieves both goals.

The Sanitation SOP's requirements will take effect 6 months after publication of these final rules, rather than 90 days as originally proposed.

Establishments slaughtering livestock or poultry will be required to begin process control verification testing for generic *E. coli* 6 months after publication of this final rule.

FSIS will begin holding slaughter establishments and establishments producing raw ground products accountable for achieving *Salmonella* pathogen reduction performance standards at the time they will be required to implement HACCP under the phase-in schedule described below, rather than the single, two-year delayed effective date originally proposed. Beginning approximately three months after publication of this final rule, FSIS will initiate its pre-enforcement *Salmonella* testing program. This establishment-by-establishment *Salmonella* prevalence survey will provide critical data on the performance of establishments; it will inform establishments of their performance, and guide FSIS enforcement testing and compliance strategies after establishments are required to meet the *Salmonella* performance standards.

In response to comments, FSIS is modifying the proposed timetable for implementing HACCP from one based primarily on production process in an establishment to one based on establishment size. Under this approach, the pace at which most of the Nation's meat and poultry supply comes under HACCP-based process control will be accelerated. Most important, slaughter establishments that account for 75% of the annual meat and poultry production in the United States will be required to implement HACCP 18 months after publication of these final rules, rather than 30 months after publication as originally proposed. At the same time, very small establishments (those with fewer than 10 employees *or* with annual sales of less than $2.5 million, together accounting for less than 2% of meat and poultry production) will be provided an additional six months beyond the proposed three years to implement HACCP.

Under this timetable, FSIS gains needed time to develop and sequence inspector training and other preparatory activities. Also, establishments that carry out multiple processes (such as the so-called ''combo'' establishments that both slaughter animals and grind raw products) will be able to implement HACCP on a more coherent establishment-wide basis, rather than on a process-by-process basis. A detailed description of the implementation timetable and its rationale is provided in section II of this preamble.

State-Inspected Establishments

Both the FMIA and PPIA direct Federal cooperation with States in developing and administering intrastate inspection programs that include mandatory antemortem and postmortem inspection, reinspection, and sanitation requirements which are ''at least equal to'' Federal requirements. Consequently, each State receiving matching Federal funds for the administration of its intrastate meat and poultry inspection program must implement Pathogen Reduction/HACCP programs that are at least equal to provisions set forth in this final rule. FSIS will coordinate closely with States that maintain federally supported meat and poultry inspection programs to ensure that Pathogen Reduction/HACCP is implemented in all intrastate establishments.

Foreign-Inspected Establishments

In order to export meat or poultry to the United States, foreign countries must establish a system of inspection that is equivalent to the system in this country. Determinations of equivalency made by U.S. reviewers of foreign meat and poultry inspection systems are currently based upon (1) the presence or lack of specific regulatory requirements and (2) how those requirements are enforced. As Pathogen Reduction/HACCP regulatory provisions are implemented in the U.S. domestic market, foreign countries will concurrently be evaluated to ascertain whether their inspection systems provide equivalent regulatory provisions with adequate levels of enforcement.

*Implementation Conferences*

FSIS plans to convene a three-day HACCP implementation conference in Washington, DC, about 60 days after publication of this final rule. Similar sessions will follow in various cities around the country.

The purpose of the implementation conferences is to continue, and build upon, the dialogue among interested parties that occurred during the six days of public meetings FSIS conducted in September 1995 on the proposed rule. FSIS anticipates that the following topics will be discussed at the implementation conferences: (1) status of FSIS efforts to develop generic model HACCP plans and conduct small establishment HACCP demonstration projects; (2) the draft guidance materials published as Appendices; (3) the revised HACCP implementation schedule and certain technical aspects of the regulations being promulgated in this final rule; (4) other implementation issues identified by the public; (5) methods to achieve the goal of consistent training for FSIS and industry employees; and (6) due process and enforcement issues.

In addition, FSIS plans to conduct two public conferences on technical issues related to *E. coli* testing. The first conference is planned to be held approximately 45 days into the 60-day comment period following publication of this rule. The public conference will be led by a panel of scientists from FSIS and other government agencies who will listen to testimony and review comments received on these technical issues and share their observations and opinions. FSIS will consider their input as well as all comments received as the basis for any necessary technical amendments which will be completed at least 30 days before the

implementation date. The second conference is tentatively planned for approximately 9 months following publication of this rule. This conference would be an opportunity for the industry and others to discuss with FSIS new information based on about 3 months of testing experience that may bear on these same issues and might allow for further adjustments of protocols before FSIS inspectors are tasked, about three months later, with comparing test results to the national criteria as part of their inspection routine. FSIS will publish further, more detailed notice of these conferences in future issues of the Federal Register.

*Request for Comments*

These final rules have benefitted from substantial public comment and the dialogue that took place during extensive public meetings with interested groups and individuals. Following the close of the comment period on November 13, 1995, several industry associations requested that these regulations be issued as ''interim'' final rules with a 30-day opportunity for further public comment prior to the rules becoming final. FSIS is denying this request because the HACCP principles and other major elements of these final regulations have already been the subject of unusually extensive public comment and dialogue, and it is important to proceed toward implementation of these new food safety measures as promptly as possible.

FSIS seeks comments, however, on certain technical aspects of these final regulations and on the guidelines (published here as Appendices) that will play a role in implementation of sanitation SOP's, microbial testing, and HACCP. FSIS requests comments no later than September 23, 1996 on (1) technical issues that are associated with *E. coli* testing; (2) the *E. coli* performance criteria, and (3) the Sanitation SOP's Guideline and Model Sanitation SOP's, published at Appendices A and B, respectively.

Based on comments it receives, FSIS will make any necessary revisions in the draft guidelines and technical aspects of the *E. coli* testing regulation prior to the effective date of the affected regulatory requirements.

With respect to the HACCP final regulations, FSIS requests comments by November 22, 1996 on (1) the revised HACCP implementation timetable, including any factual information that commenters believe would justify any adjustments in the announced effective dates; (2) the Hazards and Preventive Measures Guide (published at Appendix D) and (3) the Guidebook for the Preparation of HACCP Plans (published at Appendix C).

## II. Hazard Analysis and Critical Control Point Systems

*Overview of Final Rule*

This final rule requires that federally inspected establishments implement HACCP systems to address hazards that are reasonably likely to occur in their operations. The HACCP systems mandated by this final rule focus on attributes affecting product safety, not those affecting economic adulteration or quality. On the effective dates of this final rule, FSIS will begin verifying HACCP system operations as part of its inspection program. Establishments will be required to maintain a HACCP plan covering every meat or poultry product produced for human food. Processes for which HACCP plans must be developed include slaughter for all species; raw ground meat or poultry products; raw product, not ground (e.g., meat cuts or whole or cut-up birds); shelf-stable nonheat-treated products (e.g., jerky); shelf-stable heat-treated products (e.g., edible fats); thermally processed/commercially sterile products (e.g., canned soup); fully cooked nonshelf-stable products (e.g., canned hams that must be refrigerated); not fully cooked/heat-treated products (e.g., char-marked beef patties); and nonshelf-stable products with secondary inhibitors (e.g., fermented sausage). It should be noted that the category of raw, not ground product can include products with certain additional processing steps beyond carcass dressing, such as cutting up whole carcasses or marinating meat or poultry products.

*History and Background of HACCP*

HACCP is a conceptually simple system whereby meat and poultry establishments can identify and evaluate the food safety hazards that can affect the safety of their products, institute controls necessary to prevent those hazards from occurring or keeping them within acceptable limits, monitor the performance of controls, and maintain records routinely. HACCP is the best system currently available for maximizing the safety of the nation's food supply.

HACCP systems have been recommended for use in the food industry for more than a quarter century. The HACCP concept has been promoted by government and scientific groups and incorporated for many years in FSIS's and FDA's regulations on canned foods. Committees of the NAS have recommended that government agencies with responsibility for controlling microbiological hazards in foods, including FSIS, promulgate regulations requiring industry to utilize the HACCP system for food protection purposes.

The NACMCF, which was established in accordance with a NAS committee recommendation, endorsed the HACCP system as an effective and rational approach to the assurance of food safety. In its March 20, 1992, publication ''Hazard Analysis and Critical Control Point System,'' NACMCF advocated the standardization of the HACCP principles and their application by industry and regulatory authorities, with each food-producing establishment developing a HACCP system tailored to its individual product, processing, and distribution conditions.

The U.S. General Accounting Office, in a series of reports between 1992 and 1994, endorsed HACCP as an effective, scientific, risk-based system for protecting the public from foodborne illness. On December 18, 1995, the FDA published final rules requiring the adoption of HACCP systems in seafood processing plants (60 FR 65096).

International and foreign government bodies have also advocated the adoption of HACCP systems. The International Commission on Microbiological Specifications for Foods (ICMSF), in its 1988 report, ''HACCP in Microbiological Safety and Quality,'' endorsed the use of HACCP systems in food production, processing, and handling. In 1993, the Food and Agriculture Organization/World Health Organization Codex Alimentarius Commission adopted a HACCP document that now serves as a guide for countries to incorporate HACCP principles into their food industries. The seven HACCP principles adopted by the Codex Alimentarius Commission are identical to those adopted by the NACMCF and on which this final rule is based. HACCP principles have been embodied in recent European Union regulatory directives and in food protection programs conducted by the governments of Canada, New Zealand, and Australia.

*The Seven HACCP Principles*

The seven HACCP principles recommended by NACMCF in 1992 provide the framework for this final rule. While the seven principles are not explicitly listed as such in the codified regulatory text, they are embodied in the regulatory requirements for a hazard analysis in § 417.2(a); the elements of a HACCP plan in § 417.2 (b) and (c); the corrective action requirements in § 417.3; the validation, verification, and reassessment requirements in § 417.4; and the record review and maintenance

requirements in § 417.5. The seven HACCP principles are discussed below.

*Principle No. 1:* A hazard analysis of each process must be carried out. The purpose of the analysis is to identify and list the food safety hazards reasonably likely to occur in the production process for a particular product and the preventive measures necessary to control the hazards. A food safety hazard is any biological, chemical, or physical property that may cause a food to be adulterated or otherwise unsafe for human consumption. A listed hazard must be of such a nature that its prevention, elimination, or reduction to acceptable levels is essential to the production of a safe food.

Examples of questions to be considered in a hazard analysis include: (1) What potential hazards may be present in the animals to be slaughtered or the raw materials to be processed? (2) What are the avenues that might lead to contamination of finished product with pathogenic microorganisms, hazardous chemicals, or other potentially hazardous contaminants? (3) What is the likelihood of such contamination and what are the means for preventing it? (4) Does the food contain any ingredient historically associated with a known microbiological hazard? (5) Does the food permit survival or multiplication of pathogens or toxin formation during processing? (6) Does the process include a controllable processing step that destroys pathogens? (7) Is it likely that the food will contain pathogens and are they likely to increase during the times and conditions under which the food is normally stored before being consumed? (8) What product safety devices are used to enhance consumer safety (e.g., metal detectors, filters, thermocouples)? (9) Does the method of packaging affect the multiplication of pathogenic microorganisms and/or the formation of toxins? (10) Is the product epidemiologically linked to a foodborne disease?

*Principle No. 2:* The critical control points (CCP) of each process must be identified. A CCP is a point, step, or procedure at which control can be applied and a food safety hazard can be prevented, eliminated, or reduced to an acceptable level. All hazards identified during the hazard analysis must be addressed. The information developed during the hazard analysis should enable the establishment to identify which steps in their processes are CCP's.

Identification of CCP's for controlling microbial hazards throughout the production process is particularly important because these hazards are the primary cause of foodborne illness. The establishment may find the CCP decision tree developed by the NACMCF useful in the CCP identification process (see Figure 1). However, the use of this technique in identifying CCP's is not required by this final rule.

*Principle No. 3:* The critical limits for preventive measures associated with each identified CCP must be established.

BILLING CODE 3410–DM–P

**Figure 1. CCP Decision Tree (Apply at each step of process with an identified hazard.)**

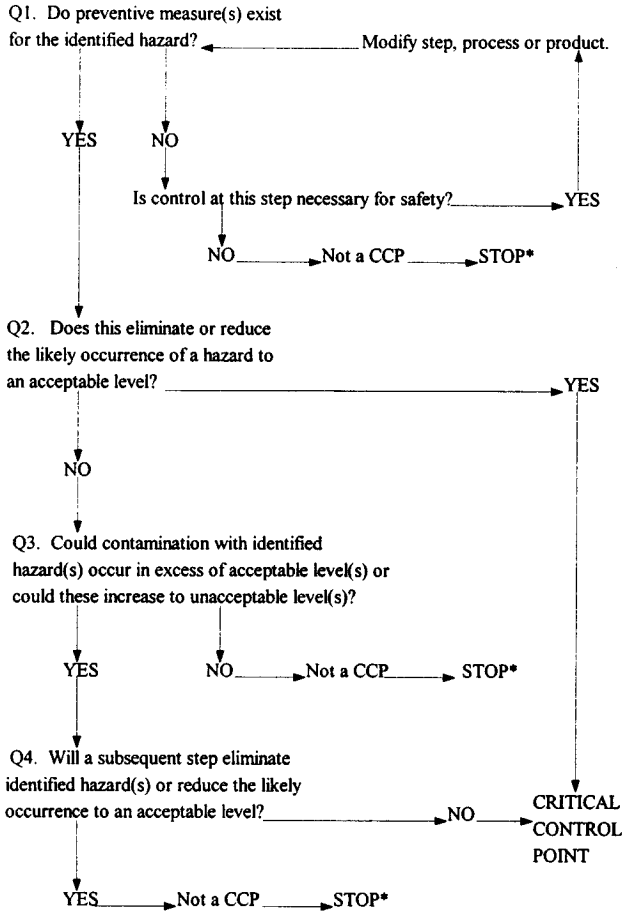


*Proceed to next step in the described process.

BILLING CODE 3410–DM–C

A critical limit is the maximum or minimum value to which a process parameter must be controlled at a CCP to prevent, eliminate, or reduce to an acceptable level the identified physical, biological, or chemical food safety hazard. Critical limits are most often based on process parameters such as temperature, time, physical dimensions, humidity, moisture level, water activity, pH, titratable acidity, salt concentration, available chlorine, viscosity, preservatives, or survival of target pathogens. Critical limits should be based on applicable FSIS regulations or guidelines, FDA tolerances and action levels, scientific and technical literature, surveys, experimental studies, or the recommendations of recognized experts in the industry, academia, or trade associations.

Establishments are encouraged to establish critical limits more stringent than those now required by FSIS regulations or suggested by scientific data to ensure that regulatory requirements are routinely met, even when minor deviations occur.

*Principle No. 4:* The monitoring requirements for CCP's must be established. Monitoring is an integral part of HACCP and consists of observations or measurements taken to assess whether a CCP is within the established critical limit. Continuous monitoring is preferred, but when it is not feasible, monitoring frequencies must be sufficient to ensure that the CCP is under control.

Assignment of the responsibility for monitoring is an important consideration for each CCP. Personnel assigned the monitoring activities should be properly trained to accurately record all results, including any deviations, so that immediate corrective actions may be taken.

*Principle No. 5:* The HACCP plan must include corrective action to be taken when monitoring indicates that there is a deviation from a critical limit at a critical control point. Although the process of developing a HACCP plan emphasizes organized and preventive thinking about what is occurring as the meat or poultry product is being manufactured, the existence of a HACCP plan does not guarantee that problems will not arise. For this reason, the identification of a planned set of activities to address deviations is an important part of a HACCP plan. In such instances, corrective action plans must be in place to determine the disposition of the potentially unsafe or noncompliant product and to identify and correct the cause of the deviation. The HACCP plan itself might require modification, perhaps in the form of a new critical limit, or of an additional CCP.

*Principle No. 6:* Effective recordkeeping procedures that document the entire HACCP system must be developed and maintained. A HACCP system will not work unless consistent, reliable records are generated during the operation of the plan, and those records are maintained and available for review. One of the principal benefits of a HACCP process control system to both industry and regulatory officials is the availability of objective, relevant data.

*Principle No. 7:* HACCP systems must be systematically verified. After initial validation that the HACCP system can work correctly and effectively with respect to the hazards, the system must be verified periodically. Periodic verification involves the use of methods, procedures, or tests in addition to those used for monitoring, to determine whether the HACCP system is in compliance with the HACCP plan and/or whether the HACCP plan needs modification and revalidation to achieve its food safety objective.

In the NACMCF explanation of the verification principle, which FSIS is following, four processes are involved in the verification of the establishment's HACCP system. The establishment is responsible for the first three; FSIS is responsible for the fourth. The first is the scientific and technical process, known as ''validation,'' for determining that the CCP's and associated critical limits are adequate and sufficient to control likely hazards. The second process is to ensure, initially and on an ongoing basis, that the entire HACCP system functions properly. The third consists of documented, periodic, reassessment of the HACCP plan. The fourth process defines FSIS's responsibility for certain actions (Government verification) to ensure that the establishment's HACCP system is functioning adequately.

*HACCP and the FSIS Food Safety Strategy*

The food safety goal of FSIS's Pathogen Reduction/HACCP rulemaking proposal is to reduce the risk of foodborne illness from meat and poultry products to the maximum extent possible by ensuring that appropriate and feasible preventive and corrective measures are taken at each stage of the food production process where food safety hazards occur. There is no single technological or regulatory solution to the problem of foodborne illness. Continuous efforts are required by industry and government to improve methods for identifying and preventing hazards and to minimize the risk of illness.

FSIS proposed HACCP as the framework for carrying out its comprehensive strategy to improve food safety. HACCP, combined with the other measures required by this rulemaking, will substantially improve the ability of meat and poultry establishments and FSIS to target and systematically prevent and reduce food safety hazards and, working together, to continuously improve food safety as science and technology improve. These measures fill a critical gap in the current system with respect to the control and reduction of harmful bacteria on raw meat and poultry products and will, over time, significantly reduce the risk of foodborne illness.

FSIS's meat and poultry inspection program currently addresses and will continue to address many matters of importance to the safety and quality of the food supply, including supervision of industry compliance with sanitation standards, exclusion of diseased animals from the food supply, examination of carcasses for other visible defects that can affect safety and quality, and inspecting for economic adulteration. These activities respond to some of the public's most basic expectations regarding the safety and quality of the food supply and reflect the standards and requirements established by Congress in the laws FSIS administers. FSIS is strongly committed to the most effective and efficient implementation of these statutory requirements.

This final rule initiates a fundamental change in the inspection program to better meet FSIS's paramount obligation to protect the public health. Specifically, it addresses in a substantive way the public health problem of foodborne illness associated with the consumption of meat and poultry products. It does so in large part by better delineating and clarifying the respective roles of industry and FSIS to ensure that meat and poultry products are produced in accordance with sanitation and safety standards and are not adulterated or misbranded within the meaning of the FMIA and PPIA. This rule makes clear that the industry is responsible for producing and marketing products that are safe, unadulterated, and properly labeled and packaged. FSIS is responsible for inspecting products and facilities to verify that the statutory requirements are being met and for taking appropriate compliance and enforcement actions when the requirements are not being met.

The line between the responsibilities of FSIS and those of the industry has often been blurred. This is because of the prescriptive nature of the current FSIS inspection program and the tendency for some establishments to rely on FSIS inspectors to do what is necessary to direct the correction of deficiencies and to ensure that outgoing products are safe, and not adulterated or misbranded. Some establishments operate on the assumption that if the inspector identifies no problem, their meat or poultry products may be entered into commerce. This is even more problematic because the current inspection system is based primarily on organoleptic methods that cannot detect the hazards of pathogenic microorganisms. The line has also been blurred because of the excessive reliance of the FSIS inspection program on the detection and correction of problems after the fact, rather than assurance that problems will be prevented, systematically by design, in the first place.

The changes FSIS will effect with this final rule will eliminate this confusion and delineate clearly the respective responsibilities of FSIS and industry. The changes constitute a fundamental shift in the FSIS regulatory program, which FSIS is convinced will significantly enhance the effectiveness of the program and substantially reduce the risk of foodborne illness.

*Preparing for HACCP Implementation*

For the new FSIS food safety strategy, particularly HACCP, to be successful, FSIS must reconsider its current reliance on prescriptive command-and-control regulations and instead rely more on performance standards. Not only do command-and-control regulations prescribe the means by which establishments are to achieve a particular food safety objective, but they are susceptible of being enforced in a manner that leads to the inspector's substantial involvement in management decisionmaking. Performance standards, on the other hand, prescribe the objectives or levels of performance (such as pathogen reduction standards for raw product) establishments must achieve, but afford establishments flexibility in determining how to achieve those performance objectives. The shift to performance standards and the concomitant increase in flexibility for meat and poultry establishments reflect FSIS's commitment to stimulating the innovative capacity of the meat and poultry and allied industries to improve the safety of their products.

Command-and-control regulations are generally incompatible with HACCP and the FSIS food safety strategy, and conflict with the goal of reducing the

risk of foodborne illness on a continuing basis. They deprive establishments of the flexibility to innovate, one of the primary advantages of HACCP, and undercut the clear delineation of food safety responsibilities between industry and FSIS, on which the FSIS strategy is based. Therefore, to prepare for HACCP implementation, FSIS is conducting a thorough review of its current regulations and will, to the maximum extent possible, convert its command-and-control regulations to performance standards. (For a discussion of this regulatory reform initiative, see advance notice of proposed rulemaking published on December 29, 1995; Docket No. 95–008A; 60 FR 67469).

*Inspection Under HACCP*

HACCP-oriented food safety inspection changes FSIS's approach to overseeing the safety of meat and poultry products. Under this new approach, FSIS will rely less on after-the-fact detection of product and process defects and more on verifying the effectiveness of processes and process controls designed to ensure food safety. FSIS will restructure its inspection tasks and rely on review techniques aimed at systems designed for preventing problems that could lead to the production of unsafe meat or poultry products. FSIS will carry out various activities to ensure that industry HACCP systems meet the requirements of this rule, and are functioning as designed.

Beginning on the effective date of the regulation for a particular establishment, FSIS personnel will carry out a general review of an establishment's HACCP plan to determine its conformance with the seven HACCP principles. This evaluation will take place at the time of start-up or initial implementation of the HACCP plan for new establishments. Subsequently, special teams of FSIS personnel will work in conjunction with assigned inspectors to conduct in-depth reviews, on a regular basis, of the establishment's current HACCP plan to verify their scientific validity and ongoing adequacy for preventing food safety hazards. Further, at any time that the HACCP plan is revised or amended, FSIS personnel assigned to the establishment will review the plan to determine if it is in conformance with regulatory requirements.

FSIS will also carry out its verification activities by focusing on an establishment's ongoing compliance with HACCP-related requirements. Inspectors will be assigned to carry out the verification activities under HACCP-oriented inspection in much the same way as they receive their assignment schedules under the current system. A verification activity might include reviewing all establishment monitoring records for a process, reviewing establishment records for a production lot, direct observation of CCP controls as conducted by establishment employees, collecting samples for FSIS laboratory analysis, or verifying establishment verification activities for a process.

As HACCP-based process control is established in meat and poultry establishments, with its continuous monitoring by the establishment and oversight by FSIS, opportunities to incorporate new technologies and continuously improve food safety will be more readily identified. The continuous monitoring and verification of production processes and controls by the establishment and FSIS, which is an essential feature of the HACCP system, will set the stage for further food safety improvements.

Many commenters on the proposal expressed concern that the number of inspectors would decline and the quality of Federal inspection would diminish with HACCP implementation. FSIS expects HACCP to enhance the effectiveness of its meat and poultry inspection, not diminish it. Implementation of this final rule will clarify that the meat and poultry industries and FSIS have separate responsibilities for safety of the food supply. Industry will be required to establish process control systems for all forms of meat and poultry slaughter and processing and meet appropriate regulatory performance standards. By vigorous inspectional oversight of HACCP and reliance on objective test results and other observations to verify compliance with performance standards, FSIS inspectors will be better able to ensure that products leaving FSIS establishments are safe. Also, FSIS will be better able to allocate its resources to areas of greatest risk. HACCP implementation will move both industry and FSIS toward a more preventive approach to ensuring the safety of meat and poultry.

A cross-section of consumer groups, FSIS employees, and meat and poultry establishments stated that each livestock and bird carcass must continue to be examined by trained, experienced FSIS inspectors and veterinarians, even under a HACCP system. They stated that carcass-by-carcass inspection is essential to identifying animals with diseases that are transmissible to humans and other disease conditions causing animals to be unacceptable for human food. About 2,000 commenters maintained that HACCP is not, nor should it be, a substitute for carcass-by-carcass inspection by Federal inspectors.

Carcass-by-carcass inspection is a legal requirement that binds both FSIS and the industry. It also addresses nonsafety considerations that are not addressed by HACCP. Therefore, HACCP cannot substitute for carcass-by-carcass examination. However, in light of HACCP, which will improve process control in slaughter establishments, FSIS plans to examine current tasks related to carcass-by-carcass inspection and determine what changes, if any, could improve the effectiveness of inspection or result in a more productive use of resources.

Many commenters representing the meat and poultry industries argued that proposed pathogen reduction and HACCP system requirements layer an additional set of regulations and an additional program of inspection onto the current meat and poultry inspection system. These commenters recommended that FSIS review and revise or eliminate current regulations, directives and other FSIS guidance prior to finalizing the proposal as a means for ensuring they are compatible with pathogen reduction and HACCP requirements. Commenters stated that this review would not only mitigate inspection burdens imposed on industry by the proposal, but would facilitate the smooth implementation of pathogen reduction and HACCP requirements, as well.

FSIS agrees that regulations, directives, and guidelines should be consistent with HACCP and is currently reviewing regulations, directives, and other guidance materials governing meat and poultry inspection. Those regulations, directives, and guidance documents that are inconsistent or incompatible with HACCP principles and procedures will be amended or revoked. This task will not only ensure consistency throughout the regulations, directives, and other documents, but will reduce duplication and help focus inspection on the most serious risks to food safety.

*Implementation Schedule*

FSIS proposed to phase in implementation of HACCP during a 12 to 36-month period primarily on a process-by-process basis, except that all ''small'' establishments (defined as establishments with annual sales of less than $2.5 million) would be allowed the full 36 months to implement their HACCP plans.

FSIS received numerous comments on the proposed implementation schedule. Many commenters from meat and

poultry establishments said the proposed period for implementing HACCP was too short. These commenters requested more time to develop HACCP plans, train employees, and purchase or upgrade equipment. Many commenters requested that small businesses be granted more time to implement HACCP so they could amortize the costs of hazard analysis and plan development, equipment purchases, personnel training and records maintenance. A number of commenters suggested alternative timetables for implementation, ranging from three to fifteen years.

Several consumer groups argued that the proposed implementation schedule was too slow and would compromise public health because serious outbreaks of foodborne illness would continue to occur while establishments prepare for HACCP implementation. Some industry commenters said they were ready to implement HACCP immediately and expressed concern about whether and when the FSIS inspection force would be prepared to oversee HACCP implementation.

Also, several commenters requested a tiered implementation based on product risk. These commenters suggested that establishments which produce high-risk products, such as slaughter establishments or ground beef processors, be required to implement HACCP first and that establishments which produce low-risk products, such as canning establishments, be required to implement HACCP last.

Also, some commenters were concerned about the proposed phase-in period based on different types of product categories and processes because contaminated meat and poultry are known to come from a variety of sources. Commenters said that requiring establishments to implement HACCP at different times for different processes within an establishment would confuse establishment employees, inspection personnel and consumers. Consequently, these commenters suggested that HACCP be implemented simultaneously by all establishments.

Other commenters disputed the definition of small business used in the proposal. Recommendations for defining a small business included using fewer-than-500-employees definition developed by the Small Business Administration (SBA), using a definition reflecting volume of product or number of animals slaughtered, or using a definition based on the level of sales.

In response to concerns expressed by commenters, FSIS is modifying the implementation schedule for HACCP. The revised implementation schedule is based on the size of an establishment, that is, a business entity producing meat or poultry products at a location. Each establishment is required to implement HACCP simultaneously for all processes, rather than on a process-by-process basis. Large establishments (those having 500 or more employees) are required to implement HACCP 18 months after publication of this final rule. ''Small'' establishments are required to implement HACCP 30 months after publication. The definition of ''small'' establishment has been changed to correspond with SBA's size standards for business entities, and is now an establishment having 10 or more but fewer than 500 employees. A new category of ''very small'' establishments (those having fewer than 10 employees or less than $2.5 million in annual sales) will have 42 months to implement HACCP. All individuals employed on a full-time, part-time, temporary, or other basis at a given establishment must be counted as employees. This requirement corresponds with the SBA definition of employee set forth in 13 CFR 121.404.

FSIS is committed to bringing the Nation's meat and poultry supply under HACCP systems as rapidly as possible. Phasing in HACCP implementation is essential due to the logistical effort required to manage a fundamental change in work processes, roles, and responsibilities for both establishments and FSIS. The revised implementation schedule reflects the readiness of establishments of varying sizes to implement HACCP, the time needed by industry to develop HACCP plans and train employees, and the time needed by FSIS to train its employees.

The principal advantages of the revised implementation schedule are as follows:

1. Large slaughter establishments account for 75 percent of slaughter production and thus, most of the Nation's meat and poultry supply will come under HACCP-based process control one year earlier than originally proposed. Because the greatest risk of contamination with pathogenic microorganisms occurs during this initial stage of production, FSIS considers this a significant improvement over the original schedule in terms of expediting progress on improving the safety of meat and poultry products. The revised implementation schedule also ensures that approximately 45 percent of processed products will be produced under a HACCP system within 18 months. In comparison, only 25 percent of processed products would have been produced under HACCP systems at the 18-month mark based on the proposed implementation schedule.

2. By shifting initial implementation of HACCP from 12 months to 18 months after publication of the final rule, FSIS will have sufficient time to manage the transition to sanitation SOP's in all establishments, which will begin six months after publication of this final rule, and to train FSIS employees to implement HACCP. FSIS does not believe it could manage this transition and successfully implement HACCP in 12 months.

3. Eighteen months will provide ample time for the large establishments to comply. In fact, it is reasonable to assume that many of these establishments may implement HACCP before the deadline.

4. Implementing HACCP on the basis of establishment size will be simpler for both FSIS and establishments and much less disruptive for establishments with multiple processes. Under the proposal, these establishments would have faced multiple implementation dates (e.g., establishments that both slaughter cattle and grind beef).

5. The ''very small'' establishments will have an additional six months to implement HACCP. This will enable FSIS to complete the demonstration projects planned for ''small'' and ''very small'' establishments. The extra time will also ensure the availability of ''off-the-shelf'' HACCP training programs prepared by private or industry-sponsored consultants. Other FSIS implementation aids, such as model HACCP plans, audio, video, or computer training aids, and various publications such as guidelines, notices and pamphlets will have undergone extensive development as well.

*Small Business Issues*

FSIS recognizes that many smaller establishments lack the familiarity with HACCP that exists already in many larger establishments. Therefore, FSIS is planning an array of assistance activities that will facilitate implementation of HACCP in ''small'' and ''very small'' establishments.

FSIS is developing 13 generic HACCP models for the major process categories, which will be available in draft form for public comment, and in final form, at least six months before HACCP implementation. The generic models are being developed especially to assist ''small'' and ''very small'' establishments in preparing their HACCP plans. Because each HACCP system is developed by an individual establishment for its specific process and practices, the generic models will serve only as illustrations, rather than as

prescriptive blueprints for a specific HACCP plan. They should, however, remove much of the guesswork and reduce the costs associated with developing HACCP plans.

FSIS will also conduct HACCP demonstration projects for ''small'' and ''very small'' establishments during the two-year period following promulgation of this final rule. These projects will be conducted at various sites to show how HACCP systems can work for various products under actual operating conditions. Some of these demonstrations will involve ''very small'' establishments and will address issues unique to those establishments. For instance, how does a HACCP system function in an establishment with only a single employee? Through these demonstration projects, FSIS, State inspection authorities, participating establishments, and the industry at large will gain added understanding of the problems and techniques of HACCP implementation and operation in ''small'' and ''very small'' establishments.

FSIS is making available to ''small'' and ''very small'' establishments various HACCP materials that should assist these establishments in conducting their hazard analyses and developing their HACCP plans. These guidance materials include a ''Guidebook for the Preparation of HACCP Plans'' (Appendix C) and a ''Hazards and Preventive Measures Guide'' (Appendix D). These materials should be particularly useful to ''small'' and ''very small'' establishments that may lack the expertise for conducting hazard analyses and designing establishment-specific HACCP plans.

The ''Guidebook for the Preparation of HACCP Plans'' has been designed to provide ''small'' and ''very small'' establishments with a step-by-step approach for developing a HACCP plan and includes examples and sample forms at each step. The Guidebook can be used alone or in combination with the ''Hazards and Preventive Measures Guide.''

Because the development of an adequate HACCP plan depends on a good hazard analysis, the ''Hazards and Preventive Measures Guide'' develops HACCP Principle No. 1 in much greater detail than does the ''Guidebook for the Preparation of HACCP Plans.'' The hazards guide identifies potential biological, chemical, and physical hazards associated with a variety of raw materials and common ingredients, as well as major processes used in the meat and poultry industry. In addition, the hazards guide contains examples of preventive measures for common hazards and associated critical limits for those measures. Also provided are examples to illustrate approaches to implementing the remaining HACCP principles (e.g., monitoring, corrective actions, records, and verification procedures) for various hazards and critical control points.

FSIS invites comments and suggestions on how it may further ease the transition of ''small'' and ''very small'' establishments to HACCP-based operations.

*Training Considerations*

Many commenters, including consumer groups, FSIS employees, meat and poultry establishments, and State governments, agreed that proper training in HACCP procedures and plan development is vital for successful HACCP implementation. A number of commenters suggested that joint training sessions be held for FSIS and establishment employees to ensure uniform understanding between inspection personnel and industry. Others suggested that FSIS certify acceptable training sites and courses of study for establishment employees to coincide with government employee training. However, some commenters argued that FSIS should not accredit training programs because to do so would limit the development of training programs.

FSIS agrees that effective training of both FSIS and industry employees is critical to HACCP's success. FSIS also agrees that alternatives are needed to make training practical for various kinds of establishments. With these objectives in mind, FSIS is cooperating with the private sector to ensure that a wide variety of training options are available to industry and FSIS employees. For instance, FSIS is encouraging the International Meat and Poultry HACCP Alliance, national and local trade associations, State and local officials, the State agricultural extension services, and local colleges and universities to help establishments incorporate HACCP into their operations. The implementation conferences, discussed elsewhere in this preamble, will address how to achieve the goal of consistent training for FSIS and industry employees.

Other plans include offering HACCP briefings to industry at many locations nationwide. Each session will be led by FSIS HACCP trainers, will be held during the evening, be open to industry and other interested persons, and include a question-and-answer period. FSIS training sessions will be limited to FSIS and State employees because of complex logistical and cost considerations.

USDA's National Agricultural Library has developed and maintains the HACCP Training Programs and Resources Database. It is accessible via the Internet at ''http://www.nalusda.gov/fnic/foodborne/foodborn.htm'' or ''gopher://gopher.nalusda.gov/11/infocntr/fnic/foodborne/haccp'' and provides listings of available training programs (workshops, satellite conferences, etc.), resources (videotapes, software, manuals, textbooks, etc.), and consultants (individuals and companies). Other Internet servers with HACCP-related information are operated by various firms, governments, organizations, and academic institutions.

Several meat and poultry establishments also commented on funding for HACCP training, suggesting that FSIS or State inspection programs fund establishment employee HACCP training. FSIS is making every effort to assist establishments in making the transition to HACCP. However, each establishment will be responsible for training its employees.

*Mandatory Versus Voluntary HACCP*

Most commenters supported the FSIS proposal to make HACCP mandatory in all meat and poultry establishments. However, some commenters requested that HACCP be voluntary rather than mandatory to alleviate economic burdens, especially on small businesses. Commenters further suggested that, at such time as a voluntary HACCP program proved successful, FSIS could mandate HACCP or, alternatively, market forces and advancing technology could be relied on to ensure its broad acceptance in all parts of the meat and poultry industry.

FSIS has determined that a mandatory HACCP program is the only viable option that will effect adequate processing improvements in all establishments throughout the meat and poultry industries. Mandatory HACCP systems are supported by several prominent organizations, including the International Meat and Poultry HACCP Alliance and the American Meat Institute, which petitioned FSIS to initiate rulemaking to mandate HACCP. HACCP is now and has been voluntary; some establishments have it, most do not. The preamble to the proposed rule explained FSIS's conclusion, affirmed by most commenters, that HACCP is the optimal framework for targeting and reducing the many potential, but largely preventable, hazards associated with meat and poultry products. The risks of

foodborne illness associated with meat and poultry products will be minimized to the greatest extent possible only if HACCP systems are implemented in every establishment.

*HACCP From Farm-to-Table*

A large number of commenters requested that HACCP be required throughout all phases of food production, from the farm to the consumer. These commenters asserted that HACCP plans could be developed by producers, slaughterers, processors, retailers, food service operators, and restaurants to assess and mitigate food safety risks. Furthermore, many commenters claimed that the majority of foodborne illness cases can be attributed to mishandling at the consumer level and FSIS should therefore strengthen consumer education as well as require HACCP.

There is widespread agreement that ensuring food safety requires taking steps throughout the farm-to-consumer continuum to prevent hazards and reduce the risk of foodborne illness. FSIS is encouraging the active development of food safety measures to minimize public health hazards in animals presented for slaughter. A description of these farm-to-table efforts is discussed earlier in this document.

*Total Quality Control (TQC) Establishments and HACCP*

One commenter requested that establishments currently operating under the TQC provisions (9 CFR 318.4(c) and, 381.145(c)) be allowed to continue to operate under modified hours. If this is not the case, establishments currently under TQC will incur considerable overtime costs. The commenter asked why, if HACCP represents an improvement over TQC, the establishment operating under HACCP should require more inspection coverage than one operating under current TQC provisions.

This final rule does not alter current policies and practices regarding inspectional coverage and overtime charges in establishments operating under FSIS-approved TQC systems. HACCP is a safety-oriented system of process control that addresses food safety hazards differently than any current FSIS inspection systems, including TQC. Because TQC systems address considerations unrelated to safety, inspection practices developed by FSIS in connection with TQC may or may not be applicable to the implementation of HACCP.

*Freedom of Information Act Concerns*

Most commenters stated that HACCP records should not be available to requestors through the Freedom of Information Act (FOIA). Some said HACCP records should be used for verification only and should not be included in government files. Others also suggested that access to records by FSIS inspection personnel be restricted to records that are necessary for HACCP compliance monitoring, such as hazard analyses, HACCP plans, CCP monitoring records and corrective action documentation. Other commenters wanted to prohibit FSIS personnel from copying or removing any records from the establishment. Some commenters requested that HACCP records be generally available to the public.

In the preamble to the proposed regulation, FSIS stated that, as a preliminary matter, at least some elements of HACCP plans and monitoring records could be classified as trade secrets or commercial confidential information and may be protected from public disclosure under exemptions provided by FOIA and USDA and FSIS regulations promulgated pursuant to FOIA. FSIS specifically invited comment on the issue of public disclosure of HACCP records and on whether FSIS has any discretion about the releasability of HACCP records that it has in its possession.

Recordkeeping is critical to the successful functioning of HACCP systems in meat and poultry establishments. FSIS will have access to HACCP records and any other records FSIS regulations require. While the records required by this final rule are clearly within the establishment's domain and ownership, FSIS will have access to them. These records, and FSIS access to them, are necessary to effectuate a mandatory system of preventive controls to achieve food safety.

FSIS will continue to make use of documentation to which it has access when necessary to evaluate the operations of official establishments. Inspection personnel will normally review the records at establishments as part of routine HACCP oversight activities. When inspection personnel suspect that an establishment's HACCP system is not operating correctly, they will copy appropriate portions of establishment records, as needed, for further evaluation and possible enforcement action.

An establishment will not ordinarily be required to submit copies of HACCP plans, verification documents, or day-to-day operating records to FSIS. Consequently, FSIS will not normally possess establishment records that may be of a proprietary nature and the issue of whether they are releasable under FOIA should not arise.

Copies of establishment HACCP records may, however, be acquired by inspection personnel to document enforcement actions or otherwise assist FSIS in carrying out its responsibilities. The release by FSIS of information about establishments and their operations is governed by the FOIA. This statute requires Federal agencies to make available to the public agency rules, opinions, orders, records, proceedings, and information concerning agency organization and operations. FOIA provides exemptions from public disclosure for various kinds of information, including information concerning trade secrets and confidential commercial or financial information, and information compiled for law enforcement purposes, the release of which would be prejudicial or harmful to law enforcement or to the privacy rights or safety of individuals.

The FOIA disclosure exemption that is most likely to be relevant is that covering trade secret and confidential, commercially valuable information. FSIS's experience in meat and poultry inspection, its experience with HACCP, and its understanding from the cost-benefit modeling and other studies undertaken in the preparation of these regulations is that HACCP plans will take each establishment some time and money to develop, and will be considered by the establishment to be confidential. It follows that some HACCP plans will include confidential, commercially valuable information, meeting the definition of ''trade secret.'' Plans that incorporate unique time-and-temperature regimens to achieve product safety, or other parameters that are processor-specific and that are the result of considerable research and effort, will ordinarily meet this definition.

Moreover, a plan is valuable to the establishment that produces it for no other reason than that it took work to write. The equity in such a product is not readily given away to competitors. FSIS also knows from its own experience that establishment configurations tend to be unique to individual establishments, or at least have unique features. While generic plans will have great utility in many circumstances, they serve primarily as models for establishments to develop their own plans. Establishments will still have to expend time and money to tailor HACCP to their individual

circumstances. Thus, at least some HACCP plans or other records will include information to which FSIS has access but which FSIS will not be required to disclose publicly under FOIA.

It should be noted, in this regard, that FOIA is not a confidentiality statute, but has as its primary purpose the assurance of the public's right of access to Government information. Agencies must grant requests that ''reasonably describe'' information sought in agency files that is not exempt from mandatory disclosure. For this reason, FSIS understands that it cannot make promises of confidentiality that exceed the permissible boundaries established under FOIA.

*FSIS Enforcement Authority and Whistleblower Protection*

A large number of commenters requested that FSIS endorse enforcement tools contained in the proposed Family Food Protection Act (H.R. 1423, S. 515), including strengthened authority to refuse or withdraw inspection from official establishments, assessment by the Secretary of civil penalties for violations of the inspection laws, and protection of ''whistleblowers'' from harassment, discrimination, prosecution, and liability. Within the meaning of the proposed legislation, whistleblowers are employees or other persons who assist or demonstrate an intent to assist USDA in achieving compliance with the laws and regulations, refuse to violate or assist in violating the law, or are involved in commencing or testifying in a legal proceeding conducted by USDA.

FSIS has determined that, while additional legislative authority would be helpful in certain areas, it is not needed to implement HACCP and the other requirements established in this final rule.

As to whistleblower protection, many comments urged that these regulations include such protection for employees of meat and poultry slaughtering or processing establishments. Whistleblower protection is designed to protect workers from being fired or otherwise discriminated against for revealing wrongdoing by their employers. The wrongdoing in this case would presumably involve the forced falsification of HACCP records or other interference with proper operation of the HACCP system.

One concern raised by these commenters and others about the credibility of a HACCP system is that important records can be falsified. It is alleged that, without whistleblower protection, it is much less likely that FSIS will know about falsifications. It was also suggested that there is a need to encourage and protect employees who report food safety problems or other violations of the inspection laws.

While FSIS is confident that it can detect falsification in the course of its routine reviews of establishment records, coupled with in-plant observations, FSIS also expects that, as is now the case, it will be alerted by establishment employees to possible wrongdoing even in the absence of whistleblower protection. FSIS has relied on information provided by employees of the regulated industries for many years. From time to time, information is provided with an expectation that the identity of the informant will be kept confidential. FSIS provides this protection, to the extent possible. This policy has been effective.

As a legal matter, FSIS is not empowered by the FMIA and PPIA to build explicit whistleblower protection into the regulations. In contrast to the explicit statutory whistleblower protection accorded Government employees, the FMIA and PPIA do not provide for whistleblower protection for industry employees of the kind suggested by some commenters, and no such explicit protection is included in the final rule.

FSIS believes, however, that certain features of the HACCP regulations being adopted and the manner in which FSIS will inspect meat and poultry establishments compensate for the lack of formal whistleblower protection, for purposes of ensuring food safety. Most importantly, each establishment will be required to document, through records kept by establishment employees, that the critical limits required to ensure food safety are being met and when a failure occurs, proper corrective action is taken. The failure to document safety-related failures and to take necessary corrective action violates HACCP regulations and the establishment will be subject to appropriate regulatory action. Moreover, the falsification of required HACCP records is a serious violation of Federal criminal law and will be investigated and pursued aggressively by FSIS.

Establishments that conscientiously implement HACCP will, in the course of normal operations, support employee reports of HACCP deviations or other potential hazardous processing conditions and take immediate corrective action. HACCP systems in which employees with HACCP responsibilities are prevented or deterred from carrying out their responsibilities will be considered inadequate, and FSIS will pursue appropriate enforcement action.

By virtue of the extensive presence of FSIS inspectors in meat and poultry establishments and the daily access of FSIS inspectors to HACCP records, FSIS will be able to verify whether problems are being properly documented and addressed and will be able to observe potential food safety problems that establishments have not found or are not confronting in an appropriate manner. FSIS emphasizes that undetected or uncorrected conditions which are likely to cause foodborne illness or injury should be reported immediately to FSIS by any person with knowledge of their existence.

*Enforcement and Due Process*

A significant number of commenters raised concerns about the level of discretion inspection personnel will have in suspending establishment operations due to alleged deficiencies in either the design or the operation of a HACCP plan. Some urged FSIS to make clear to inspection personnel that such extreme actions are to be reserved only for situations in which continued operation of the establishment presents an imminent public health risk. Others strongly argued that operations should be suspended or inspection withdrawn when an establishment fails to comply with any HACCP requirements. Clarification was requested regarding the imposition of penalties and, specifically, what circumstances would warrant suspension of operations or withdrawal of inspection.

Generally, the nature of the enforcement action taken will vary, depending on the seriousness of the alleged violation. Minor violations of the HACCP requirements may be recorded by Agency personnel to determine establishment compliance trends. Minor violations may also result in intensified inspection to ensure that there is no pattern of noncompliance and that there is no underlying food safety concern.

Conversely, serious, repeated, or flagrant violations will result in immediate regulatory action, such as stopping production lines; applying ''U.S. Rejected'' tags to involved equipment, lines, or facilities; retention of product, and suspension or withdrawal of inspection. Because of the importance of recordkeeping to the functioning of HACCP systems and the production of foods that are safe for human consumption, FSIS views recordkeeping as a serious matter with potentially grave implications if records are not properly maintained or are falsified.

Many commenters were troubled by what they perceived to be limited procedural due process afforded to establishments when faced with the suspension of inspection due to a finding that the HACCP plan is inadequate. FSIS agrees that all findings of inadequacy should be sound scientifically and legally, and that suspensions should not be invoked in an arbitrary manner. The optimal system would provide an appropriate level of protection to establishments without unnecessary delay, especially where no factual dispute is likely.

Based on the comments received on this issue, FSIS has decided not to finalize the proposed Rules of Practice at this time. FSIS is interested in receiving comments and suggestions on enforcement, alternative dispute resolution, and due process issues, and has included these topics for discussion at the implementation conferences. On the basis of the conference discussions, FSIS will complete any required rulemaking covering these issues prior to the first implementation date for HACCP.

*The Final Rule*

Reorganization of HACCP Regulatory Text

FSIS has reorganized the codified regulatory text proposed in the Pathogen Reduction/HACCP proposal and reworded a number of the provisions. These changes have been made in response to comments received on the proposal, for the sake of greater clarity and ease of use, and to conform with FSIS's planned reorganization and consolidation of all its meat and poultry inspection regulations. In general, the final HACCP regulations are more streamlined than the proposed provisions, organized in a more logical form, and less prescriptive than the proposed regulations. Also, as part of the FSIS and FDA effort to adopt a common approach to food safety (described in the January 1996 National Performance Review document ''Reinventing Food Regulations''), FSIS has made changes to the proposed regulatory text, where applicable, to be consistent with FDA's final rule on HACCP systems for seafood (60 FR 65096; December 18, 1995).

To the extent possible, the HACCP requirements for both meat and poultry products have been consolidated in a new part 417.

Requirements affecting grants or refusals of inspection have been moved to a new § 304.3 and a new § 381.22.

FSIS received approximately 7,500 written and many oral comments on the proposed rule from meat and poultry slaughter operations, processors, retailers, trade and other associations, consumer advocates, the scientific and public health community, Federal and State government agencies and foreign governments, employees, and other interested parties. While a majority of these commenters supported the proposal to require adoption of HACCP by meat and poultry establishments, they differed widely regarding plan development, implementation, and related issues. Comments on the specific proposed regulatory requirements and FSIS's responses, follow.

HACCP Systems as a Condition of Receiving Inspection

Proposed § 326.7(a)(2) and § 381.602(a)(2) would have permitted the issuance of a grant of inspection concurrent with a new establishment's development and validation of its HACCP plan. This provision is confusing because it is unclear how an establishment can develop and validate its HACCP plan ''concurrent'' with the granting of inspection when the HACCP plan can only be validated on the basis of commercial operations and the establishment can operate commercially only under inspection. Therefore, it would be impossible for an establishment to validate a HACCP plan prior to receiving a grant of inspection, as proposed. A number of commenters noticed this difficulty and requested that establishments be allowed a reasonable amount of time under commercial production to validate their HACCP plans.

Commenters also disagreed with the proposed HACCP plan development timetable for new establishments or establishments producing new products or those conducting product test production runs. Some said that new establishments and establishments producing new products or conducting test runs subsequent to the applicable HACCP effective date should have at least six months or up to two years to finalize HACCP plans. Others said that all HACCP plans should be developed before start-up with revisions allowed within a reasonable period.

FSIS is in basic agreement with these comments and is revising the basic procedures for granting inspection to allow establishments time to validate their HACCP plans. The provisions in §§ 304.3(b) and 381.22(b) require that any new establishment conduct a hazard analysis and develop a HACCP plan prior to being issued a conditional grant of inspection. The establishment must validate its HACCP plan within 90 days after the conditional grant of inspection is issued. After FSIS has determined that the establishment has validated its HACCP plan, a permanent grant of inspection will be issued. An establishment already receiving inspection may produce a new product for distribution only if it has developed a HACCP plan applicable to the product and validates the plan within 90 days after beginning production of the product.

FSIS is requiring that new facilities and products be covered by a HACCP plan at the time commercial production begins. Establishment management is expected to consider development of HACCP systems as part of essential pre-production decisions for new operations. Establishments are also expected to modify their HACCP plans as needed based upon experience and reported results. FSIS has determined that no start-up time is needed in these instances since the establishment will not be experiencing any transition from an old system to a new processing system.

FSIS is considering what further changes may be necessary in the procedures for granting and inaugurating inspection at official establishments to better accommodate HACCP-oriented inspection. FSIS plans to publish a notice of proposed rulemaking on this matter in the near future.

Definitions

Proposed §§ 326.1 and 381.601 have been combined, streamlined, and redesignated as § 417.1. Thirteen proposed definitions were determined to be commonly understood or unnecessary and have been removed. Of the seven definitions remaining, the definitions for ''critical control point,'' ''critical limit,'' ''HACCP system,'' and ''responsible establishment official'' have been clarified. For example, the definition of ''critical control point'' includes the phrase ''as a result'' to indicate that the prevention, reduction, or elimination of a food safety hazard occurs because of action taken at the critical control point. The definition of ''responsible establishment official'' has been expanded to include the individual with overall authority or a higher level official of the establishment.

The revised definitions are consistent with those promulgated in FDA's final rule on HACCP systems for seafood. For example, FSIS has added a new definition to § 417.1 for the term ''process-monitoring instrument.'' This term is defined as ''an instrument or device used to indicate conditions during processing at a critical control

point.'' FSIS determined that this definition would be helpful to establishments developing HACCP plans.

Hazard Analysis and HACCP Plan

The proposal required each establishment to develop and implement a HACCP plan which incorporated the seven HACCP principles. A hazard analysis was to be conducted to identify biological, chemical and physical hazards and a list of steps in the process where potentially significant hazards could occur and the preventive measures to be taken were to be identified.

Provisions relating to the hazard analysis and development of the HACCP plan were proposed as §§ 326.2 and 381.602, ''Development of HACCP Plan,'' §§ 326.3 and 381.603, ''HACCP Principles,'' and §§ 326.4 and 381.604, ''Implementation of the HACCP Plan.'' These provisions have been modified and incorporated into § 417.2.

Several commenters argued that in the event the hazard analysis identified no significant hazards, the establishment should be exempt from developing HACCP plans and operating under a HACCP system. Commenters identified lard and meat flavoring manufacturers and canning operations as examples of establishments that may identify no hazards.

To clarify the concept of potentially significant hazards, and to be consistent with the FDA final rule on HACCP systems for seafood, the final rule requires each establishment to conduct, or have conducted for it, a hazard analysis to determine the food safety hazards reasonably likely to occur in the production process. A food safety hazard that is reasonably likely to occur is defined as one for which a prudent establishment would establish controls because it historically has occurred, or because there is a reasonable possibility that it will occur in the particular type of product being processed, in the absence of those controls.

FSIS agrees that if an establishment's hazard analysis reveals no hazards, then no HACCP plan would be required. However, FSIS is currently unaware of any meat or poultry production process that can be deemed categorically to pose no likely hazards. With regard to the lard and meat flavoring examples, FSIS believes that reasonably likely biological and physical hazards requiring control measures exist in establishments manufacturing these products and that, therefore, HACCP plans are required.

FSIS agrees that the microbial hazards associated with canned meat and poultry products are eliminated by complying with the regulations in 9 CFR §§ 318.300–311 and 381.300–311. These regulations are based on HACCP concepts and provide for the analysis of thermal processing systems and controls to exclude microbial hazards. Accordingly, the final rule provides that HACCP plans for thermally processed/commercially sterile products do not have to address the food safety hazards associated with microbiological contamination if the product is produced in accordance with the canning regulations. However, because the current regulations exclusively address microbial hazards, processors of canned meat, meat food and poultry products must develop and implement HACCP plans to address chemical and physical hazards that are reasonably likely to occur.

The current canning regulations contain numerous prescriptive features, including extensive FSIS involvement in the decisionmaking process, that are inconsistent with the philosophy underlying HACCP. In the advance notice of proposed rulemaking ''FSIS Agenda for Change: Regulatory Review'' (60 FR 67469; December 29, 1995), FSIS stated its intention to convert the canning regulations to performance standards, which are more consistent with HACCP. Until changes in the canning regulations are finalized, canning establishments do not have to address microbial hazards in their HACCP plans.

The provisions of proposed § 326.3(a), (a)(1), and (a)(2), and § 381.603(a), (a)(1), and (a)(2) relating to process flow charting and the identification of intended uses and consumers of the product have been combined in the final rule into § 417.2(a)(2).

Proposed §§ 326.2(b) and 381.602(b) would have required that any HACCP plan be developed with assistance of a HACCP-trained individual employed by the establishment, that the individual's name and resume be on file, and that the individual meet other prescriptive requirements. These requirements have been removed in response to criticism expressed in comments received and for reasons given below in the discussion of § 417.7. The new § 417.2(a)(1) permits someone other than an establishment employee to conduct the hazard analysis.

Proposed §§ 326.3(a) and 381.603(a) would have required a hazard analysis to identify any biological (including microbiological), physical, or chemical hazards. In § 417.2(a)(3), FSIS lists ten areas that should be considered by an establishment when performing its hazard analysis. These ten areas are: natural toxins; microbiological contamination; chemical contamination; pesticides; drug residues; zoonotic diseases; decomposition; parasites; unapproved use of direct or indirect food or color additives; and physical hazards. This list of possible hazards provides more complete guidance to establishments conducting a hazard analysis; it responds to industry comments criticizing as ''vague'' the proposed definition of hazard; and it is also consistent with the list of hazards in FDA's final rule on HACCP systems for seafood.

Proposed §§ 326.2(a) and 381.602(a) would have required that establishments develop, implement, and operate a HACCP plan for each process conducted by the establishment, and provided a list of process categories subject to this requirement. Section 417.2(b) provides that each establishment develop and implement a HACCP plan covering each product produced, whenever its hazard analysis reveals one or more food safety hazards that are likely to occur. This requirement is substantively the same as the proposal.

Section 417.2(b)(1) provides a revised list of process categories, while § 417.2(b)(2) states that a single HACCP plan may encompass multiple products within a single processing category, if the hazards, CCP's, and critical limits are essentially the same, and as long as any plan features that are unique to a specific product be clearly set out in the HACCP plan and observed in practice. For example, an establishment's HACCP plan for the processing of cooked sausage might cover bologna, knockwurst, and frankfurters that the establishment produces.

Proposed §§ 326.2(d) and 381.602(d) would have required that the HACCP plan be developed in two stages, both to be completed six months prior to the phase-in date of the applicable process category or upon application for inspection or when a new process is ready for implementation. FSIS has eliminated these requirements because they are impractical.

Proposed §§ 326.2(d)(1) and 381.602(d)(1) would have required that every HACCP plan be in a format similar to the NACMCF and FSIS generic models. FSIS agrees with those commenters who found this proposed requirement to be unnecessary and too prescriptive, and has not included this requirement in the final rule.

Proposed §§ 326.3 and 381.603 set forth the seven HACCP principles accompanied by the corresponding requirements establishments must meet when developing HACCP plans. In response to comments that the detailed

provisions were unnecessary, FSIS has set forth in § 417.2(c) a simplified list of requirements, based on the seven HACCP principles, to be met by establishments when developing HACCP plans. The proposed requirements remain, except for the following additions, unchanged.

Two subparagraphs have been added to new § 417.2(c)(2), clarifying the requirements for the identification of CCP's within a HACCP plan. This new section requires that establishments list in their HACCP plan the CCP's for each of the identified food safety hazards, including, as appropriate: (1) CCP's designed to control food safety hazards that could be introduced in the establishment, and, (2) CCP's designed to control food safety hazards that may have been introduced into the product before, during and after its entry into the establishment. In response to comments objecting to the proposed requirement for establishments to use a decision tree in identifying CCP's (proposed § 326.3(b) and 381.603(b)), this requirement has been removed from the final rule.

Proposed §§ 326.4 and 381.604 would have required that a responsible establishment official, formerly defined as ''the management official located on-site at the establishment who is responsible for the establishment's compliance with this part,'' review, approve, and sign the HACCP plan. Section 417.2(d)(1) requires that the HACCP plan be signed by the responsible establishment official, defined as the individual with overall authority on-site or a higher level official of the establishment, possibly off-site. Further, in § 417.2(d)(2), FSIS is correcting an oversight in the proposal by requiring that the HACCP plan must be signed and dated upon initial acceptance by the establishment and at any time the plan is modified. The proposal required that the responsible establishment official sign the plan upon completion of the hazard analysis and the development of the HACCP plan. The HACCP plan must also be signed and dated at least once each year after the required reassessment.

Finally, FSIS explicitly states its statutory authority to enforce the HACCP regulations under § 417.2(e), providing that if an establishment fails to develop and implement a HACCP plan or to operate in accordance with the requirements of this part, the products produced by the establishment may be deemed adulterated.

Corrective Actions

Proposed §§ 326.3(e) and 381.603(e) would have required that each establishment develop corrective actions to be taken when there is a deviation from an established critical limit. Under the proposed provisions, if a deviation were found, the establishment would describe the steps taken to identify and correct the deviation, determine how noncompliant product would be handled, ensure that no safety hazards exist after the corrective actions are taken, and define measures to prevent recurrence. Further, this section required that the establishment determine whether its HACCP plan required modification and, if so, to modify the plan.

Many commenters stated that establishments should be empowered to make decisions on product safety. Commenters generally maintained that the establishment should have primary responsibility for setting the CCP's and critical limits and for taking corrective action when there is a deviation. Inspectors should verify the overall effectiveness of the HACCP plans, including the corrective actions taken by establishments. A number of commenters were concerned about the possibility that FSIS might take action on a product if a critical limit in the establishment's HACCP plan was not met, even if the establishment were taking corrective action under the plan. Commenters felt that this action by FSIS would be unwarranted. An additional concern was that the potential for this type of problem would be compounded if the establishment set a critical limit more restrictive than necessary for food safety to meet quality standards, for example, a higher cooking temperature than necessary to produce a pathogen-free product.

The establishment must take corrective action for any deviation from a set critical limit. FSIS will verify that the establishment has taken appropriate corrective action as specified in their HACCP plan. If an establishment fails to take corrective action as specified in its HACCP plan, FSIS may find that the HACCP system is inadequate pursuant to § 417.6(c). FSIS agrees that establishments should be empowered to make decisions regarding product disposition in accordance with corrective actions specified in their HACCP plans. FSIS is requiring (§§ 417.2(c)(5) and 417.3) that establishments describe in their HACCP plans the corrective actions that will be taken if a critical limit is not met and assign responsibility for taking corrective action. Corrective actions must ensure that no product that is injurious to health or is otherwise adulterated as a result of the deviation enters commerce, that the cause of the deviation is identified and eliminated, that the CCP will be under control after the corrective action is taken, and that measures to prevent recurrence are established.

FSIS recognizes that preestablished corrective actions may not cover every contingency and that unforeseen hazards or deviations may occur. Thus, § 417.3 of the regulations provides a series of steps to be taken in such situations. These steps include segregating and holding affected product and conducting a review to determine the acceptability of the product for distribution, ensuring that any adulterated product or product otherwise injurious to health does not enter commerce, and reassessing HACCP plans to determine if any modification is needed.

Validation, Verification, and Reassessment

Proposed §§ 326.3(g) and 381.602(g) would have required that establishments develop procedures for HACCP plan validation by an adequately trained individual, and set forth the related requirements. Proposed §§ 326.4 and 381.604 further detailed the validation requirements, stating that during the validation period, establishments shall conduct repeated verifications of the plan, hold frequent meetings with Program employees, and review records generated by the HACCP system. Under the proposal, establishments were to modify their HACCP plan following any ingredient change, product reformulation, manufacturing process or procedure modification, equipment change, or any other such change. Revalidation of an establishment's HACCP plan would have been required whenever significant product, process, deviations, or packaging changes required modification of the plan.

Many commenters expressed confusion about the meaning of the terms ''validation'' and ''verification'' as used in the proposed rule. The question of who will be responsible for validating HACCP plans was raised by a number of commenters. Some requested a clearer definition of the term ''validation'' as well as clarification of who will approve and verify a HACCP program. Particular concern was expressed about what role local inspection personnel will have in the HACCP plan development and approval process. Some said that FSIS should assume more responsibility for approving HACCP plans through a prior approval system; others argued that no formal acceptance or prior approval of

HACCP plans by FSIS should be required.

In the final rule, FSIS has clarified the concepts of ''validation'' and ''verification'' by delineating the responsibilities of FSIS and establishments in separate codified sections. The initial validation, ongoing verification, and reassessment procedures to be followed by establishments are presented in § 417.4 and FSIS's verification procedures are presented in § 417.8.

Because prior approval of HACCP plans by FSIS would be contrary to redefined roles and responsibilities inherent in the HACCP philosophy, FSIS will not approve or validate HACCP plans before an establishment implements its HACCP system. Each establishment will be responsible for developing its HACCP plan and ensuring its adequacy.

Commenters opposed to FSIS involvement in plan validation offered two suggestions: (1) establishments could use an independent third party, such as a processing authority or consultant with HACCP expertise to validate HACCP plans or (2) HACCP-trained establishment employees could validate plans.

FSIS concurs. Establishments will be required to have validated plans and may use independent consultants, process authorities, or establishment employees trained in accordance with § 417.7 for plan development and validation. FSIS is not prescribing that any particular validation method be used.

Some establishments may choose to use the services of laboratories or processing authorities to validate their CCP's, especially if there are questions about the effectiveness of traditional controls, or if they are considering use of controls which have not been previously validated, such as cooking time/temperature combinations. However, many establishments will choose to rely on CCP's that have been scientifically validated and reported in the literature. In either case, FSIS believes that requiring individual establishments to validate their HACCP plan ensures that the CCP's and the overall HACCP plan work as intended in the establishment to reduce or eliminate hazards and prevent the production of unsafe food.

One industry member observed that his company defines validation as documenting that a critical control point eliminates or effectively addresses microbiological hazards.

FSIS agrees that validation includes documenting that critical control points effectively address relevant hazards, including such microbiological hazards as *E. coli* O157:H7, *Salmonella,* and *Campylobacter,* but emphasizes that validation is more than just the accumulation of microbiological data verifying each CCP. It involves scientifically demonstrating that a HACCP system as designed is effective in controlling the food safety hazards identified through the hazard analysis.

One academic commenter advocated inoculation studies using pathogens as the best way to assure that a HACCP plan will effectively control microbiological hazards. Such studies would be conducted before HACCP implementation and should be aimed at demonstrating that selected CCP's are appropriately monitored to control specific pathogens. The studies would be performed under controlled conditions in off-site laboratories or pilot establishments. One advantage of this approach, according to the commenter, would be to permit validation studies to be conducted by trade associations and other industry groups on a collective basis in a way that could benefit both large and small establishments.

FSIS agrees that validation of CCP's is an important part of HACCP plan validation, and that laboratory inoculation studies as suggested by the commenter can make an important contribution in appropriate cases. Inoculation studies can demonstrate the effectiveness of particular controls in addressing particular hazards under experimental conditions, and can produce data that can be relied upon by many establishments to support plan validation. In no case, however, would a laboratory inoculation study or any laboratory study be sufficient by itself to validate a HACCP plan. An important element of validation is the identification or development of data which show that the establishment can apply the process or control to get the anticipated effect under actual in-plant operational conditions. For some well-established, widely used processes or technologies, in-plant validation can be accomplished by combining existing scientific data from laboratory studies, the scientific literature, or other sources, with the results of commercial trials using recognized protocols. Where processes are well-documented in the scientific literature, it is not necessary to require inoculation studies or any other research effort as part of the validation process. However, an establishment introducing a new technology, applying standard technology in an unusual way, or lacking experience with a technology, would have to undertake more extensive scientific and in-plant validation of its HACCP plan under commercial operating conditions.

Data assembled to validate a HACCP plan are usually of two types: (1) theoretical principles, expert advice from processing authorities, scientific data, or other information demonstrating that particular process control measures can adequately address specified hazards, such as studies establishing the temperatures necessary to kill organisms of concern; and (2) in-plant observations, measurements, test results, or other information demonstrating that the control measures, as written into a HACCP plan, can be operated within a particular establishment to achieve the intended food safety objective. This means that the data used to validate a HACCP plan may be derived from various sources, including the scientific literature, product testing results, experimental research results, scientifically based regulatory requirements, FSIS guidelines, computer-modeling programs, and data developed by process authorities. The nature and quantity of information required to validate a HACCP plan will vary depending on factors such as the nature of the hazard and the control measures chosen to address it.

FSIS believes that validation data for any HACCP plan must include some practical data or information reflecting an establishment's actual early experience in implementing the HACCP plan. This is because validation must demonstrate not only that the HACCP plan is theoretically sound, but also that this establishment can implement it and make it work. For example, steam vacuuming has been scientifically demonstrated to be effective in removing visible contamination and associated bacteria from carcass surfaces. A slaughtering establishment using the technology as a control measure at a CCP, however, would still have to demonstrate its ability to use the technology effectively at the CCP.

Establishment verification is intended to show that the HACCP system is actually working effectively on a day-to-day basis. Verification also includes repeatedly reviewing and evaluating the various components of the system. Verification activities include checking the adequacy of the critical limits; reviewing monitoring and recordkeeping procedures (as distinguished from monitoring the CCP's), and evaluating the adequacy of corrective actions.

One consumer group stated that FSIS should require that establishments identify the specific microbiological hazards that their HACCP plans are

designed to address, and validate and verify the plans using pathogen-specific testing to ensure that establishments control these hazards.

FSIS agrees that establishments must identify the specific microbiological hazards their HACCP plans are designed to address and that the plan must be initially validated and continually verified as effective in addressing those hazards. FSIS also agrees that pathogen-specific testing can play an important role in both initial validation and verification.

For example, in validating the adequacy of a beef slaughter HACCP plan addressing the hazard posed by *E. coli* O157:H7, laboratory inoculation studies involving pathogen-specific testing could be used to validate the effectiveness of the specific control measures that an establishment is considering for incorporation in its HACCP plan. As discussed above, to complete the validation of the control measures for *E. coli* O157:H7, the establishment would also be required to demonstrate that the experimentally validated measures can be successfully carried out under actual operating conditions, but, for *E. coli* O157:H7 on going verification is unlikely to include in-plant testing for the pathogen due to its relatively infrequent occurrence.

In-plant testing to verify a control measure may be appropriate with other pathogens, however. For example, a poultry slaughter establishments would be required to validate and verify the effectiveness of its HACCP plan in addressing the hazards posed by *Salmonella* and *Camplylobactor.* Depending on the nature of the control measures the establishment selects, in-plant pathogen testing could be a necessary and practical component of an on-going verification for these pathogens as they are present in sufficient numbers to make in-plant testing feasible and informative. FSIS intends to work closely with industry at large and with specific establishments in particular to ensure that HACCP plans are adequately validated and verified for microbial pathogens of public health concern.

Verification of HACCP plans by establishments is designed to demonstrate that the HACCP plan is accomplishing process control and resulting in the production of safe food on a continuing basis. Verification is distinct from ongoing establishment monitoring, which is designed to provide a record showing that the written HACCP plan is being followed. Establishment verification activities should provide practical results specific to the operation of its HACCP plan, and can include review of CCP-monitoring records; review of corrective action records; calibration of process-monitoring instruments; collection of either in-line or finished product samples for microbiological, chemical, or physical analysis; and direct observations of monitoring activities and corrective actions. Frequencies for conducting verification activities will vary, depending on various factors, such as the type of process and volume of products, the results of prior verification activities, consistency of conformance with the HACCP plan, how deviations are handled, and the results of any sampling activities.

The record-verification could include determining whether the critical limit for the CCP, as called for in the HACCP plan, matches the critical limit indicated in the records. The verification could also involve checking to assure that the critical limit as set in the establishment's HACCP plan is adequate to prevent a hazard. For example, this check might involve determining whether the random variations inherent in any process are within the limits (temperature ranges, physical contamination) set for the process, and that the critical limit is never exceeded or, further, that the probability that the critical limit might ever be exceeded is extremely low.

The visual observations and records verification could include, in addition to seeing that the records are being properly maintained, assuring that corrective actions have been taken whenever any deviations have occurred and that, when taken, the corrective actions were sufficient to solve the problem.

FSIS has made two minor changes from the proposed validation and verification requirements. First, FSIS has removed the proposed requirement that during validation an establishment hold frequent meetings with Program employees. FSIS recognizes that frequent meetings may not be necessary or appropriate. Also, § 417.4(a)(2) provides that the establishment's ongoing verification activities include direct observation of monitoring activities and corrective actions, review of records, and calibration of process-monitoring instruments. An establishment calibrates its monitoring instruments to determine whether they are functioning properly.

Reassessment

The proposed rule would have required that establishments revalidate the HACCP plan whenever significant product, process, deviations, or packaging changes required modification of the plan.

A consumer group stated that establishments should be required to examine their plans on a regular basis, whenever any new equipment is introduced, new employee training is implemented, or for any other significant change in the processing environment. The commenter further stated that revalidation should be required of establishments every three years even if there has been no significant change in operations. Most commenters generally agreed that the industry has the primary responsibility to review and modify HACCP plans when necessary and that the review and modification process should be flexible.

FSIS agrees that HACCP plans should be reexamined periodically and that the review and modification process should be flexible. The final rule requires that each establishment reassess the adequacy of its HACCP plan at least annually, and whenever any changes occur that could affect the hazard analysis or alter the HACCP plan (§ 417.4(a)(3)). These changes may include, but are not limited to, changes in: raw materials or source of raw materials; product formulation; slaughter or processing methods or systems; production volume; personnel; packaging; finished product distribution systems; or the intended use or consumers of the finished product. The reassessment must be completed by an individual trained in accordance with § 417.7. Immediate modification of the plan is required if the reassessment reveals that the plan is no longer adequate to meet the requirements of part 417. FSIS is also requiring that an establishment that does not have a HACCP plan reassess its hazard analysis whenever a change occurs that could reasonably affect whether a food safety hazard exists.

FSIS considers annual reassessment appropriate because, as commenters have noted, HACCP plans are dynamic and evolving. HACCP plans may be modified several times during the months after they are first implemented. Further, repeating the entire validation process may not be necessary to ensure that the HACCP system is functioning correctly after modification.

The intent of this provision is to provide for periodic modification of the HACCP plan to ensure that it is continuously effective in controlling and preventing food safety hazards. This intent is supported by comments received from various sectors of the public. The commenters tended to see periodic review and modification of HACCP plans as both desirable and

expected and that periodic review and modification would allow the establishment to apply its experience to continually improve process controls.

FSIS believes that ''reassessment'' encompasses the different types of evaluation, from reanalyzing the verification procedures for an updated CCP to repeating the validation procedures set forth in § 417.4, that may be necessary.

FSIS Verification

Verification of HACCP plans is also a regulatory responsibility. FSIS will verify that HACCP plans comply with the requirements of Part 417 and have been validated by the establishment. Potential verification activities by FSIS may include, but are not limited to, sampling activities (targeted and non-targeted, marketplace, rapid screening tests for chemical residues); hands-on verification (organoleptic inspection, use of temperature or other monitoring devices); and review of establishment monitoring records. The frequency of FSIS verification activities will vary, depending on a number of factors such as the establishment's past performance, risk inherent in the processes or products, quantity of product, and likely uses.

A consumer group stated that as part of its verification activities, FSIS should review all pathogen data generated by the establishment to determine the adequacy of the establishment's conclusions regarding pathogen control. FSIS plans to undertake extensive and varied activities to verify that a HACCP plan is working as intended, including review of data generated or relied on by the establishment to validate its HACCP plan.

Proposed §§ 326.7(b) and 381.607(b) set forth FSIS's responsibilities with respect to verification activities. These provisions have been slightly revised for clarity and are consolidated in § 417.8.

Records

Proposed §§ 326.6(b) and 381.606(b) listed the types of records every establishment would have been required to maintain regarding their operations under HACCP. The list included the written HACCP plan, hazard analysis, records associated with CCP monitoring, corrective actions, verification procedures and results, product codes, identity, and slaughter production lot, the dates of the records, and supporting documentation for the various features of the HACCP plan. FSIS also proposed to require a preshipment review of processing and production records associated with the HACCP plan to ensure that the records were complete, that all critical limits were met, and, if applicable, that corrective actions were taken. The review was to be performed by someone other than the person who created the records, preferably by a HACCP-trained individual, or by the responsible establishment official. FSIS considers the preshipment record review a routine verification function under HACCP principle No. 7.

FSIS also proposed that establishments retain all required records on site at all times, except those records concerning monitoring CCP's, corrective actions, and verification procedures were to be retained at the establishment for no less than one year, and for an additional two years at the establishment or other location from which the records could be made available to Program employees.

Regarding the preshipment review of records, several small establishments commented that there may not be a person other than the person who created the record available to conduct the preshipment review. Several large establishments were concerned that a HACCP-trained individual may not be available to conduct the preshipment review. FSIS has modified this requirement by stating that the preshipment review shall be conducted by someone other than the person who produced the records where practicable. Also, FSIS has retained the provision that the review be conducted preferably by an individual trained in accordance with § 417.7 or the responsible establishment official.

Some commenters recommended that FSIS allow the use of electronic or computerized recordkeeping systems to ease the burden of the proposed recordkeeping requirements. In response to these comments, FSIS has added a new § 417.5(d) which provides for the maintenance of data and information on computers, as long as controls are implemented by the establishment to ensure the integrity of the data and signatures.

Commenters also raised concerns regarding proposed record retention requirements, maintaining that keeping HACCP records for a minimum of three years would be excessive. Commenters requested flexibility in deciding how long to retain records; many stated that retention should be based on product shelf-life. In response to these commenters, FSIS has modified this requirement to provide that records required by § 417.5(a)(3) be retained at the establishment for one year if they pertain to slaughter activities or refrigerated products, and for two years if they pertain to frozen, preserved, or shelf-stable products.

To further ease the recordkeeping provisions for establishments, FSIS will permit the off-site storage of records required by § 417.5(a)(3) that are over 6 months old if the records can be made available to Program employees within 24 hours of the request. The records required by § 417.5 (a)(1) and (a)(2), however, are not eligible for off-site storage.

Proposed §§ 326.6 and 381.606 would have provided that records be made available to Program employees. Section 417.5(f) clarifies that all records required by part 417 be available to Program employees for review and copying.

For clarity, FSIS has reworded the recordkeeping provisions to require that the establishment maintain the written hazard analysis and all supporting documentation, the written HACCP and all decisionmaking documents associated with the selection and development of CCP's and critical limits, and documents supporting both the monitoring and verification procedures selected and the frequency of those procedures. Records documenting the monitoring of CCP's and critical limits, corrective actions, verification procedures and results, product code(s), product name or identity, or slaughter production lot must also be maintained. Each record must include the date the record was made. To be consistent with FDA's final rule on HACCP systems for seafood, FSIS has also added a requirement that records relating to the calibration of process-monitoring instruments be maintained.

Training

FSIS proposed two definitions related to training: ''HACCP-trained individual'' and ''recognized HACCP course.'' ''HACCP-trained individual'' was defined as ''a person who has successfully completed a recognized HACCP course in the application of HACCP principles to meat or poultry processing operations, and who is employed by the establishment. A HACCP-trained individual must have sufficient experience and training in the technical aspects of food processing and the principles of HACCP to determine whether a specific HACCP plan is appropriate to the process in question.'' A ''recognized HACCP course'' was defined as ''a HACCP course available to meat and poultry industry employees which satisfies the following: consists of at least 3 days, 1 day devoted to understanding the seven principles of HACCP, 1 day devoted to applying these concepts to this and other regulatory requirements of FSIS, and 1 day devoted

to beginning development of a HACCP plan for a specific process.''

Some commenters thought that defining a HACCP-trained individual was unnecessary, that the role of such a person in operating HACCP systems should be analogous to the role of the processing authority in canning operations.

A few commenters questioned the effectiveness of the proposed three-day training requirement stating it would not sufficiently qualify a person to implement or operate a HACCP system. Some commenters asserted that the detailed course composition with no FSIS certification of courses was inadequate and too rigid. Others insisted that what is needed is a common understanding of the basic principles of HACCP and of how HACCP can be applied to specific processes and establishments, with no FSIS certification of courses.

FSIS has revised the regulations, which are now codified in § 417.7, to simplify the proposed training requirements. The proposed definition and requirements for a HACCP-trained individual have been removed. Section 417.7 requires that individuals performing certain functions must have successfully completed a course in the application of the seven HACCP principles to meat and poultry product processing, including a segment on the development of a HACCP plan for a specific product. Only those individuals who meet the training requirements may perform the following functions:

- Development of the HACCP plan as required by § 417.2(b);
- Reassessment and modification of the HACCP plan as required by § 417.3 and/or § 417.4(a)(3).

The rule has been modified to set a basic standard for HACCP training while preserving the flexibility needed by industry to implement HACCP systems effectively. The provisions of § 417.7 are consistent with FSIS's view that training is central to the success of HACCP, that there are many avenues for HACCP training needs, and that responsible establishment officials are in the best position to determine the training needs for each establishment.

Adequacy of HACCP Plans

The proposed rule stated that a HACCP plan could be found invalid if it does not meet the regulatory requirements, if HACCP records are not being maintained to validate the plan or verify process control under the plan, or if a processing failure results in production of adulterated product.

The provisions of the final rule relating to the criteria for finding a HACCP plan inadequate are essentially the same as in the proposal, except that the term ''invalid'' has been replaced with ''inadequate'' for clarity. Also, the final rule states that a HACCP plan may be found to be inadequate if establishment personnel are not performing tasks specified in the HACCP plan. One change from the proposal concerns the correction of HACCP systems found inadequate because of product adulteration. Under the proposed §§ 326.7(c)(3)(ii) and 381.607(c)(3)(ii), the establishment would have been required to submit to FSIS, among other things, a written plan for chemical or microbiological testing by an external laboratory of finished product produced under the modified HACCP plan to show that the modified plan corrected the problem. The final rule is more flexible because decisions regarding the appropriateness of the HACCP system modifications are made by the establishment.

FSIS will verify that HACCP plans are adequate. The procedure for determining the adequacy of the HACCP plan will not be a one-step process. Instead, FSIS will take a variety of actions including reviewing the HACCP plan and associated records, directly observing the HACCP system in operation, and assessing the adequacy of corrective actions. After a thorough review is conducted, FSIS will determine whether a HACCP plan is adequate. If a plan is found to be inadequate, FSIS will take appropriate regulatory action.

III. Sanitation Standard Operating Procedures

*The Proposed Rule*

FSIS proposed that all meat and poultry establishments be required to develop, maintain, and adhere to written sanitation standard operating procedures (Sanitation SOP's). The proposal was based on FSIS's belief that effective establishment sanitation is essential for food safety and to successful implementation of HACCP. Insanitary facilities or equipment, poor food handling practices, improper personal hygiene, and similar insanitary practices create an environment conducive to contamination of products. There are direct and substantial links between inadequate sanitation and the contamination of meat and poultry products by pathogenic bacteria. FSIS tentatively concluded that Sanitation SOP's were necessary because they would clearly define each establishment's responsibility to consistently follow effective sanitation procedures and would substantially minimize the risk of direct product contamination and adulteration.

FSIS also had determined that Sanitation SOP's would improve the utilization of FSIS Inspection Program resources by refocusing FSIS sanitation inspection on the oversight of establishment prevention and correction of conditions that cause direct product contamination or adulteration. After Sanitation SOP's were in place, Agency inspection personnel would spend less time enforcing detailed sanitation requirements and directing the correction of problems after they occur. Instead, FSIS inspectors would focus on oversight of an establishment's implementation of Sanitation SOP's and on taking appropriate regulatory action when an establishment's Sanitation SOP's were not properly executed or when product contamination or adulteration was imminent, directly observed, or probably had occurred.

The concepts underlying the proposed requirements for Sanitation SOP's are important and new. In the past, FSIS has not clearly articulated the responsibility every establishment has to ensure that sanitation requirements are met every day, both before and during operations. Although the majority of meat and poultry establishments maintain adequate sanitary conditions, some establishments have significant sanitation problems that can be resolved only through more clearly defining establishment responsibility and accountability for the daily observance of sound sanitation practices.

The proposed requirements for Sanitation SOP's were the result of many years of observations by FSIS of establishment sanitation and management practices. The persistence of insanitary conditions within some meat and poultry establishments was documented in the ''1,000 Plant Review,'' conducted by FSIS between September 1993 and February 1995. This project involved unannounced visits to 1,014 inspected establishments during which operations were observed and deficiencies noted. More than 60 percent of all deficiencies documented by the review involved establishment sanitation. The distribution of sanitation problems was not, however, uniform in the establishments sampled. Fewer than half those establishments visited accounted for 90 percent of the sanitation deficiencies. Data collected through FSIS's Performance Based Inspection System similarly documents that sanitation is the most frequent deficiency noted by inspection personnel in routine establishment visits.

Through analysis of this information, FSIS determined that the difference between establishments with consistently sanitary conditions and those with chronic sanitation deficiencies is often that the better performing establishments have effective quality control and sanitation programs, including written Sanitation SOP's, while the marginal establishments do not. As a means of bringing all establishments to a consistently acceptable level of sanitation, as well as to clarify the respective roles of establishments and FSIS in achieving that goal in each establishment, FSIS proposed that every meat and poultry establishment develop, maintain, and adhere to written Sanitation SOP's.

FSIS proposed that Sanitation SOP's cover the daily preoperational and operational sanitation procedures that the establishment would implement to prevent direct product contamination or adulteration. Additionally, establishments would be required to identify the establishment officials who would monitor daily sanitation activities, evaluate whether the Sanitation SOP's are effective, and take appropriate corrective action when needed. Also, each establishment would be required to make daily records showing completion of the procedures in the Sanitation SOP's, any deviations and corrective actions taken, and maintain those records for a minimum of six months. Further, an establishment's Sanitation SOP's and records were to be made available to FSIS for verification and monitoring. Finally, the proposal provided that any equipment, utensil, room or compartment found by an inspection program official to be not in compliance with the Sanitation SOP's or insanitary would be tagged ''U.S. Rejected,'' and could not be used until it had been reinspected and passed.

FSIS solicited comments on the proposed regulatory requirements for Sanitation SOP's. FSIS also requested comments on how Sanitation SOP's should clarify the responsibilities of establishments and what role inspection personnel should play in authorizing daily startup of operations. Comments also were requested on whether certain Good Manufacturing Practices (GMP's) or other sanitation practices should be mandatory elements of the Sanitation SOP's.

The majority of the comments addressing the proposed Sanitation SOP's provisions expressed support. Many commenters, however, expressed concern about the lack of detail in the proposal regarding the required contents of an establishment's Sanitation SOP's and about how Sanitation SOP's would be enforced by inspectors. The comments, both written and oral, and FSIS's responses are discussed in the ''Comments'' section, which follows the description of the final rule.

*The Final Rule*

After careful consideration of the comments, FSIS is promulgating requirements for Sanitation SOP's, essentially the same as proposed, though with several changes and additions for both clarity and to grant establishments greater flexibility in meeting the Sanitation SOP's requirements.

As proposed, all inspected establishments shall develop, implement, and maintain written Sanitation SOP's. The Sanitation SOP's shall describe all procedures and establishment conducts daily to prevent direct contamination or adulteration of product(s). FSIS has clarified that Sanitation SOP's also shall specify the frequency with which each procedure in the Sanitation SOP's is to be conducted and identify the establishment employee(s) responsible for the implementation and maintenance of such procedure(s). While the employee responsible for implementation and maintenance of procedures in the Sanitation SOP's may be the employee who actually performs such activities, he or she instead may be the employee in charge of ensuring that the sanitation procedures are carried out. All that is required is that the Sanitation SOP's identify the employee(s) responsible for implementation and maintenance of the procedures in the Sanitation SOP's. The establishment does not need to necessarily identify the employee(s) who will actually perform the sanitation procedures. Also, an establishment's Sanitation SOP's may have more than one employee responsible for implementation and maintenance of sanitation procedures. For example, one employee may be responsible for pre-operational procedures and another may be responsible for operational procedures. The rule provides such flexibility.

Further, FSIS is clarifying in this final rule that establishments must explicitly identify pre-operational sanitation procedures in their written Sanitation SOP's, distinguishing them from sanitation activities to be carried out during operations. This will assist both the establishment and FSIS in identifying which sanitation procedures are to be carried out each day prior to start-up of operations.

FSIS is also requiring that Sanitation SOP's be signed and dated by ''the individual with overall authority on-site or a higher level official of the establishment,'' and that the signature shall signify that the establishment will implement the Sanitation SOP's. This new language grants establishments greater flexibility than did the proposed requirement that ''the establishment owner or operator'' be responsible for implementation of Sanitation SOP's. Additionally, this final rule specifies that Sanitation SOP's must be signed upon initiation and upon any modification.

As in the proposal, the format and content of Sanitation SOP's are not specified in the final regulations. Because there are many types of inspected establishments that will achieve the required sanitary conditions in different ways, this rule gives establishments flexibility to customize their sanitation plans. Each meat and poultry establishment must analyze its own operations and identify possible sources of direct contamination that must be addressed in its Sanitation SOP's.

As proposed, each establishment is required to conduct the pre-operational and operational procedures as specified in the Sanitation SOP's, monitor the conduct of the procedures, and routinely evaluate the content and effectiveness of the SOP's and modify the Sanitation SOP's accordingly. The Sanitation SOP's must be kept current. The establishment must evaluate and modify Sanitation SOP's as needed in light of changes to establishment facilities, personnel, or operations to ensure they remain effective in preventing direct product contamination and adulteration. As upon initial implementation, Sanitation SOP's must be dated and signed by the individual with overall authority on-site or a higher level official of the establishment following any modification.

Also as in the proposal, FSIS is requiring that each establishment initiate corrective action when either the establishment or FSIS determines that Sanitation SOP's or their implementation may have failed to prevent direct product contamination or adulteration. The requirements regarding corrective actions have been more thoroughly explained, however, and now specify that corrective actions shall include ''procedures to ensure appropriate disposition of product(s) that may be contaminated, restore sanitary conditions, and prevent the recurrence of direct contamination or adulteration of product(s), including

appropriate reevaluation and modification of the Sanitation SOP's and the procedures specified therein.''

This final rule also adopts the provision in the proposal requiring establishments to keep daily records documenting that sanitation and monitoring procedures listed in the Sanitation SOP's are performed. Establishments also must maintain records documenting any corrective actions taken to prevent direct contamination or adulteration of products, or when the establishment determines or FSIS notifies the establishment that its Sanitation SOP's are inadequate. FSIS has clarified that such records must be initialed and dated by the designated establishment employee(s) responsible for the implementation and monitoring of the Sanitation SOP's procedures.

In response to comments, FSIS has revised the recordkeeping requirements to allow for computer maintenance of records, as long as establishments implement controls to ensure the integrity of the electronic data. FSIS recognizes that many establishments currently use computers for maintaining a variety of types of information, including sanitation data. It would be impractical and burdensome to prohibit these establishments, or others wishing to use computers, from using computers to record and store required sanitation data.

FSIS proposed that establishments must maintain sanitation records for a minimum of six months, but did not specify whether these records had to be stored on-site. Several commenters expressed concern about the physical location of establishment sanitation records and questioned whether sanitation records must be maintained in the establishment.

FSIS requires unimpeded access to all establishment sanitation records for oversight and enforcement purposes; these records are to be an integral part of the Agency's inspection activities. FSIS anticipates that, for most establishments, these records will not be voluminous and will not create a significant storage problem. However, the Agency recognizes that space may be limited at certain inspected facilities and has revised this requirement to allow establishments to retain records off-site, provided they are not removed from the establishment for at least 48 hours following completion and they can be provided to FSIS personnel within 24 hours of being requested.

In this final rule, FSIS is clarifying that it will verify that the Sanitation SOP's are being implemented and maintained, and that they are effective. FSIS inspectors will ensure not only that an establishment is complying with the requirement to develop, implement, and maintain Sanitation SOP's, and to maintain daily records for them, but also that the Sanitation SOP's are in fact working. Inspectors will review the Sanitation SOP's, the daily records, the conduct of procedures specified in the Sanitation SOP's, and the sanitary conditions themselves.

The failure by an establishment to comply with the Sanitation SOP's regulations may initiate regulatory action. The full array of compliance tools includes process deficiency reports, tagging of equipment or areas, retention of product, letters of warning, and suspension and withdrawal of inspection. The nature of FSIS's response will depend on the circumstances. Minor omissions or errors in Sanitation SOP's documentation, not symptomatic of larger ''system'' problems, will result in regulatory action commensurate with the severity of the violation. For example, process deficiency reports might be issued to direct corrective action. However, a pattern of violations of the Sanitation SOP's provisions would lead to additional responses, with persistent and serious failures resulting in suspension or withdrawal of inspection from the establishment. Suspensions and withdrawals would be made in accordance with applicable rules of practice for those proceedings.

If FSIS determines that an establishment's Sanitation SOP's fail to include procedures to prevent direct product contamination or adulteration or that required records are not being kept, the Agency may tag affected facilities and equipment and suspend inspection until the failure is remedied. Because the tagging of insanitary facilities and equipment is based on current statutory authority, the specific regulatory provisions for tagging in the proposal are not retained in this final rule.

Verification and compliance activities under the Sanitation SOP's provisions are distinguishable from actions taken as a consequence of a finding of product adulteration under the sanitation requirements elsewhere in the regulations. As a practical matter, however, such findings are likely to be connected. A finding of deficient Sanitation SOP's or Sanitation SOP's records may prompt additional inspection activity directed at determining whether or not product contamination or adulteration has occurred. If it has, FSIS will take appropriate action to prevent adulterated product from entering commerce and, where necessary, seek recall of product that has already entered commerce.

Finally, the Sanitation SOP's requirements of this final rule are set out in a new Part 416, Sanitation. These provisions are formatted differently from the proposal to comport with FSIS's announced project to reform, reorganize, and recodify the meat and poultry regulations. This regulatory reform project is well underway, and will, among other things, eliminate unneeded regulations by combining, to the extent possible, the currently separate meat and poultry regulations. New Part 416, like new part 417 on HACCP, covers both meat and poultry products. Part 416 will be expanded and supplemented as the Agency proceeds with its initiative to review, reform, and reorganize existing FSIS regulations concerning sanitation.

*Comments and Responses*

General

Support for the proposed requirements for Sanitation SOP's was expressed by a wide range of commenters. Most supporters agreed that establishment sanitation is essential to product safety and that every meat and poultry establishment should be required to have a written sanitation plan. Those who opposed mandatory Sanitation SOP's argued that current sanitation regulations would be adequate if they were better enforced, that Sanitation SOP's would be no more than a paperwork exercise, and that they would be an additional burden on establishments. FSIS strongly disagrees with the notion that Sanitation SOP's will be a mere ''paperwork exercise,'' and believes this regulation will, in fact, result in improved sanitation and provide for more effective enforcement of the sanitation requirements.

Substantial evidence exists that insanitary facilities or equipment, poor food handling, improper personal hygiene, and similar insanitary conditions create an environment in which products become contaminated with microorganisms, including pathogens. While sanitation has improved greatly throughout the industry over the years, some individual establishments still have difficulty getting their facilities and equipment ready to start operations each day and keeping conditions sanitary during establishment operations. FSIS affirms that proper sanitation is an important and integral part of every food process and a fundamental requirement of the inspection laws that the Agency enforces.

In the past, FSIS has enforced the sanitation requirements primarily through a combination of prescriptive sanitation regulations, detailed guidance materials, and direct, hands-on involvement by inspectors in day-to-day pre-operational and operational sanitation procedures in inspected establishments. This system achieved sanitation goals on a daily basis in individual establishments, but at a relatively large public cost because it encouraged establishments to shift accountability for sanitation to the FSIS inspector. For example, in the past, FSIS inspectors have taken responsibility for checking sanitation in every slaughter establishment before it begins daily processing. In extreme cases, inspectors have led daily ''bucket brigades'' of slaughter establishment employees through pre-operational establishment cleanup. In these circumstances, FSIS has, in effect, taken responsibility for establishment sanitation conditions. The Sanitation SOP's requirement is intended to end this practice. Sanitation SOP's make it clear that responsibility for identifying and conducting procedures needed to maintain sanitary conditions rests with the establishment, not with FSIS.

Sanitation SOP's are an inspection tool. They will help individual inspectors focus their oversight in an establishment on those conditions that pose a risk of direct product contamination or adulteration, that is, on conditions which pose the greatest adulteration hazards to products subject to inspection in that establishment. The effectiveness of each establishment's Sanitation SOP's in achieving acceptable sanitation will be subject to continuing verification by FSIS inspectors through direct observation of conditions in the establishment. It is expected that, over time, inspectors in most establishments will increasingly be able to rely on a review of daily Sanitation SOP's records to determine whether establishments are complying with sanitation requirements. However, FSIS inspectors will continue to have a full array of regulatory tools to ensure the maintenance of sanitary conditions. For instance, FSIS inspectors will continue tagging equipment, utensils, rooms, or compartments in instances where there is physical evidence of insanitary conditions in the production areas of the establishment.

FSIS anticipates that the development, implementation, and maintenance of Sanitation SOP's, as well as the recordkeeping provisions, will impose a minimal burden on establishments. Some establishments already utilize written Sanitation SOP's. For other establishments, compliance with the Sanitation SOP's requirements will consist of recording their current sanitation practices. A complete discussion of the anticipated costs of implementing the SOP's requirements is contained in the Final Regulatory Impact Analysis.

Sanitation SOP's are an integral part of the Agency's strategy for making inspection more effective and more risk-based in its focus. For these reasons, FSIS is adopting the proposed requirements for Sanitation SOP's and is clarifying that developing, implementing, and maintaining Sanitation SOP's and keeping daily Sanitation SOP's records, is a condition of inspection.

Development of Sanitation SOP's

As noted previously, a number of commenters raised concerns about the content of the Sanitation SOP's and asked for more specificity. Some commenters recommended that FSIS be more specific about what procedures must be in the Sanitation SOP's. Other commenters suggested that such procedures be fully described and be made mandatory. The Agency recognizes these commenters' concerns and therefore is providing guidance on how individual establishments may develop their Sanitation SOP's in Appendix A and Appendix B to this final rule. Appendix A is a guideline on Sanitation SOP's that establishments can use in developing their own Sanitation SOP's; Appendix B is a model of an establishment's Sanitation SOP's that demonstrates what a completed Sanitation SOP's might include. Together, these guidance documents will assist establishments to develop Sanitation SOP's that address conditions unique to individual establishments and processes and that prevent direct product contamination or adulteration. As with all FSIS guidance materials, the Agency welcomes comments on how these two documents might be improved.

However, the final rule itself remains nonprescriptive in that it requires each establishment to determine for itself what procedures are necessary to prevent insanitary conditions that will cause direct product contamination or adulteration. Overall, the comments confirmed that, while proper sanitation is a common need in every food production facility, the means to achieve it are diverse and establishment-specific. Establishments that now have good sanitation and effective process controls are expected to continue using techniques that work in their establishment. Other establishments will need to analyze and select effective abatement procedures among various alternatives for attaining a sanitary processing environment. What works in one establishment may or may not work in another.

The proposed rule also solicited comments as to whether FSIS should mandate Good Manufacturing Practices (GMP's) for all or certain Sanitation SOP's. FSIS listed illustrations in the proposal of elements that might be mandatory elements of Sanitation SOP's. Although some commenters expressed support for making GMP's or other practices mandatory, many objected to such specific requirements on the basis that they would be infeasible. FSIS agrees with those commenters who stated that detailed GMP regulations are infeasible because of the difficulty in making them specific enough to be useful. FSIS also was concerned that such specificity could result in lost flexibility.

For these reasons, this final rule will not prescribe a single format for individual establishment Sanitation SOP's or mandate specific GMP's. It will be the responsibility of each establishment to consider existing FSIS regulations and guidelines; evaluate its facilities, processes, and sanitation conditions; determine what sanitation procedures must be implemented to prevent direct product contamination or adulteration; and describe these procedures in Sanitation SOP's.

Maintaining Sanitation SOP's

FSIS received several comments regarding the maintenance of Sanitation SOP's. Some commenters wanted to know whether if an establishment will be able to update its Sanitation SOP's to incorporate new technologies. Other commenters wanted to know what type of system, if any, FSIS will use to review changes to Sanitation SOP's and if a formal request for FSIS review or approval would be required.

As has been discussed previously, the final rule requires that each establishment develop, implement, and maintain its Sanitation SOP's and incorporate new sanitation technologies as appropriate. FSIS encourages the adoption of new technologies that can improve sanitation and food safety. This is an establishment responsibility. Although FSIS will not approve Sanitation SOP's, it will provide advice and guidance to establishments as they develop and begin to implement Sanitation SOP's.

Recordkeeping

Commenters also expressed concerns about what was to be in daily sanitation

records and how long and where such records were to be retained. As the proposal explained, and this final rule requires, Sanitation SOP's records must document the implementation and maintenance of Sanitation SOP's, as well as any deviations from Sanitation SOP's procedures, and corrective actions taken. As with the development of Sanitation SOP's themselves, FSIS will allow each establishment to determine the form and format of its daily sanitation records. In many establishments, a simple, daily checklist, showing that specific Sanitation SOP's procedures were implemented, initialed by the responsible establishment employee, is likely to suffice. Other establishments may find a more detailed format for its records is more useful. Some establishments may wish to use a computer-based system. This final rule provides such flexibility.

Some commenters stated that the proposed six-month retention of daily sanitation records was too long. FSIS disagrees and is adopting the proposed requirement that establishments retain Sanitation SOP's records for six months. Increased product shelf-life and the potential need for FSIS personnel to review Sanitation SOP's records many months after production make it necessary that establishments retain records for six months. Furthermore, sanitation records provide both FSIS and establishment management near-term trend data to evaluate how establishment sanitation is being carried out under the Sanitation SOP's. This feedback should be very useful to establishments in determining whether and how their Sanitation SOP's need revision. Inspectors will benefit, too, from knowing how the establishment has complied with these requirements. Establishment sanitation records will also need to be reviewed by the Agency as part of any compliance investigation.

In a related matter, several commenters expressed concern about the physical location of establishment sanitation records and questioned whether sanitation records must be maintained in the establishment. As explained above, FSIS requires unimpeded access to all establishment sanitation records for oversight and enforcement purposes. FSIS anticipates that, for most establishments, these records will not be voluminous and will not create a significant storage problem. However, in response to these comments, this final rule will allow establishments to retain Sanitation SOP's records off-site provided they are not removed from the establishment for at least 48 hours following completion and they can be provided to FSIS personnel within 24 hours of request.

Some commenters also expressed concern about public accessibility to an establishment's Sanitation SOP's records. Like establishment HACCP records, these records are kept and maintained by the establishment and generally are not Agency records. Occasionally, however, such records will be copied and incorporated into Agency records for some official purpose. These records will be disclosed to third parties only to the extent disclosure is required by the Freedom of Information Act and the Privacy Act or other applicable law. Proprietary information, personal information, and other information exempt from disclosure would be protected.

''Layering''

Many commenters were concerned that FSIS was layering requirements for Sanitation SOP's over existing regulations governing establishment sanitation practices, thereby increasing rather than decreasing intrusive, command-and-control oversight of all inspected establishments. Concern was also expressed that the new requirements might conflict with current sanitation regulations.

FSIS does not consider the Sanitation SOP's requirement to be layered over or in conflict with existing regulations. Existing regulations establish substantive sanitation-related requirements, while the new Sanitation SOP's provisions establish a means by which establishments will take responsibility for achieving sanitary conditions and preventing direct product contamination or adulteration. Sanitation SOP's also will better focus inspection oversight by FSIS inspectors on those sanitation measures required to prevent direct product contamination or adulteration. As discussed, one of the Agency's goals is to reduce inspectors' personal involvement in the conduct of routine, day-to-day sanitation procedures.

FSIS emphasizes that it does not intend or require that an establishment's Sanitation SOP's incorporate all elements of the existing FSIS sanitation regulations. These regulations contain many detailed provisions that do not relate to the prevention of direct product contamination. As the text of the Sanitation SOP's regulations and the guidance materials at Appendices A and B makes clear, FSIS intends and requires only that the Sanitation SOP contain a description of the procedures an establishment will follow to address the elements of pre-operational and operational sanitation that relate to the prevention of direct product contamination.

For example, under paragraph (a) of § 308.4 of the regulations, FSIS requires that ''Dressing rooms, toilet rooms, and urinals shall be sufficient in number, ample in size, and conveniently located.'' Although compliance with this requirement is important for the maintenance of establishment sanitation, and employee hygiene must be part of Sanitation SOP's, § 308.4(a) does not concern direct product contamination and would not need to be addressed in an establishment's Sanitation SOP's. On the other hand, the rule requires that Sanitation SOP's specifically address the pre-operational ''cleaning of food contact surfaces of facilities, equipment, and utensils'' because these procedures are necessary to prevent the direct contamination of product. Additionally, the guidance materials in Appendices A and B give examples of other procedures necessary to prevent direct product contamination that Sanitation SOP's should include, such as ''Descriptions of equipment disassembly, reassembly after cleaning, use of acceptable chemicals according to label directions, and cleaning techniques.'' FSIS emphasizes, however, that an establishment does not need to reproduce in its written Sanitation SOP's the existing regulatory requirements concerning the prevention of direct contamination or adulteration of product.

FSIS also realizes that its existing sanitation regulations contain some detailed and prescriptive provisions and that some of those regulations may be outmoded and no longer needed in light of the Agency's effort to clarify that good sanitation is the responsibility of each establishment. FSIS will continue to review, reevaluate, and revise, as necessary, all current sanitation regulations, along with related issuances and sanitation inspection procedures, to simplify and streamline them and make them more compatible with Sanitation SOP's requirements. This process was announced and initiated in the advance notice of proposed rulemaking published on December 29, 1995 (60 FR 67469). The review of sanitation regulations is a high priority for the Agency. The elements of sanitation that are required to be addressed in the Sanitation SOP's will remain as central elements of the FSIS sanitation regulations. Establishments will not need to revise their Sanitation SOP's because of the simplification and streamlining of existing FSIS sanitation regulations.

Role of Inspectors

A related concern of many commenters was the role FSIS inspectors will play in the development and enforcement of Sanitation SOP's. Some commenters expressed concern that during inspection inspectors would rely solely on record reviews instead of actually observing establishment conditions. Other commenters expressed concerns that Sanitation SOP's would merely provide FSIS inspectors with more latitude to make intrusive and arbitrary decisions.

FSIS strongly disagrees with this characterization of Sanitation SOP's and the role of the Agency's inspection personnel. Industry's responsibility for producing safe meat and poultry and FSIS's responsibility for regulatory oversight are fundamentally different. Sanitation SOP's are the establishment's commitment to FSIS that they will consistently provide a sanitary environment for food production. FSIS inspectors will not be tasked with directing an establishment's sanitation procedures, nor with ''approving'' the establishment's Sanitation SOP's. They will, however, verify that the Sanitation SOP's are being implemented and that they are effective in preventing direct product contamination and adulteration.

Oversight of Sanitation SOP's will become an increasingly important part of daily inspection activity, while the directing of sanitation activities will occur less frequently. Periodic inspection tasks will include verifying that Sanitation SOP's meet the regulation's requirements, are being implemented and maintained, and are effective in producing sanitary conditions. FSIS inspectors' oversight will include review of the Sanitation SOP's and required records, direct observation of the implementation and monitoring of the Sanitation SOP's, and visual observation of sanitary conditions in the production areas of the establishment.

FSIS expects that establishments will rely less on inspectors to direct them in maintaining sanitary conditions as establishments rely more on adherence to their own Sanitation SOP's. The mix of inspector tasks that comprise sanitation inspection also will change. As establishments adopt and successfully implement Sanitation SOP's, and consistently achieve good sanitation results, FSIS inspectors can spend less time ensuring that basic sanitation requirements are being met. Conversely, to the extent some establishments do not implement effective Sanitation SOP's and consistently achieve good sanitation, FSIS inspectors will be obliged to intensify their focus on actual establishment conditions and initiate appropriate enforcement actions.

Ensuring establishments operate under sanitary conditions should be made easier for inspectors, and ultimately permit inspectors to spend more time on other tasks. One purpose of the Sanitation SOP's regulations is to help inspectors, as well as establishments, focus their attention on those aspects of establishment sanitation that pose the most risk of causing product contamination or adulteration. Under the current inspection system, inspectors look at all aspects of establishment sanitation, including many that have a relatively low probability of causing product contamination. In the future, normal oversight activities will focus more on whether an establishment is following its Sanitation SOP's and thereby consistently preventing, or as appropriate, correcting, conditions that cause direct product contamination or adulteration. Some commenters were concerned about the effect on establishment operations if inspection personnel, when enforcing the Sanitation SOP's requirements, reject one piece of equipment, utensil, room or compartment as insanitary. As previously stated, inspectors will take prompt action in cases where there is a finding of insanitation or the likelihood of product contamination or adulteration. The type and intensity of this response will vary. For example, establishment operations may be allowed to continue if inspection personnel determine that a rejected item, compartment or room is not related to other processes or products being produced. However, inspection would be withheld in rooms, departments, or facilities associated with the production of contaminated or adulterated products where the establishment can not show FSIS that they have isolated the cause of the contamination or adulteration and have taken appropriate action to prevent further contamination or adulteration. In a similar vein, commenters also stated that establishments should not be penalized for the occurrence of a sanitation problem that is effectively abated. These commenters suggested that ''U.S. Rejected'' tags should be used only if an establishment fails to identify and correct insanitary conditions. If the establishment takes proper corrective action, they argued, it should be viewed as evidence that the Sanitation SOP's is being adequately implemented. FSIS agrees. Establishments that identify and correct insanitary conditions in a timely manner and make proper disposition of any affected product will be considered to be in compliance with the Sanitation SOP's regulations.

Although FSIS fully expects that the clarification of establishments' sanitation responsibilities will lead to better and more consistent compliance with sanitation requirements, the Agency recognizes that this will not be the case in all establishments. Establishments that fail to comply with the requirements in this final rule for Sanitation SOP's will be subject to appropriate compliance and regulatory action that will, when necessary, include suspension or withdrawal of inspection. Further, as noted in the proposal, anyone who intentionally falsifies records will be subject to criminal prosecution.

FSIS also recognizes commenters' concerns about its rules of practice and due process procedures. FSIS expects that these concerns will be addressed through changes to these procedural requirements initiated as a result of the Agency's regulatory reform project. These subjects are also on the agenda for discussion at FSIS's upcoming implementation conferences.

Relation to HACCP

Another important topic raised by commenters was the link between an establishment's Sanitation SOP's and its HACCP plan. This link was unclear to some who stated the two were redundant. HACCP plans aim at ensuring safety at specific critical control points within specific processes, while Sanitation SOP's typically transcend specific processes. Sanitation SOP's are important tools for meeting existing statutory sanitation responsibilities and preventing direct product contamination or adulteration. As such, it is appropriate that they be developed and implemented in the near-term prior to implementation of HACCP. In a sense, the Sanitation SOP's are a prerequisite for HACCP. It is anticipated that some procedures addressed in an establishment's Sanitation SOP's might eventually be incorporated into an establishment's HACCP plan. Other procedures in an establishment's Sanitation SOP's, including those addressing pre-operational sanitation procedures for cleaning facilities, equipment, and utensils, will most likely remain in the Sanitation SOP's. A sanitation procedure that is incorporated into a validated HACCP plan need not be duplicated in the Sanitation SOP's.

Training

A number of comments expressed concern about the content of inspector training, suggesting that inadequate training would result in inconsistent enforcement of the rule. Assurance was requested that inspectors would be trained to consistently monitor Sanitation SOP's. FSIS recognizes that inspectors must be trained to react as regulators rather than as quality control consultants or establishment sanitarians when a sanitation or other health and safety problem is discovered in an establishment. A primary focus of agency training sessions will be to attain this goal.

Also, some commenters asked whether joint FSIS and industry training would be offered. FSIS does not plan to allow industry to attend Agency training sessions. However, FSIS does plan to hold informational briefings for industry personnel. These will be the subject of future notices in the Federal Register.

Pre-Operation Sanitation Inspection

Some commenters asserted that establishments with good Sanitation SOP's should be permitted to start daily operations on their own, instead of having to wait for an inspector to conduct a pre-operational sanitation inspection and allow operations to start. FSIS agrees with these commenters. Accordingly, upon the effective date of this rule and implementation of Sanitation SOP's, establishments not otherwise notified by FSIS may begin daily processing upon completion of pre-operational sanitation activities without the prior approval of an inspector.

Extending the implementation date for Sanitation SOP's will also give FSIS additional time to provide needed training, instruction and management support to FSIS inspection personnel tasked with enforcing the Sanitation SOP's requirements.

Implementation Date

Finally, many commenters expressed concern about the amount of time they said it would take to prepare and implement effective Sanitation SOP's. These commenters requested more lead time to implement these requirements. FSIS agrees that some establishments may need more time than the 90 days the proposed rule provided for implementing Sanitation SOP's requirements. Consequently, FSIS is modifying this aspect of the proposal. This final rule will provide establishments six months from the effective date of this regulation to develop and implement written Sanitation SOP's. This additional time will allow these establishments to initially develop and refine their Sanitation SOP's to best meet operational needs before the effective date of the Sanitation SOP's requirements. Extending the implementation date for Sanitation SOP's will also give FSIS additional time to provide needed training, instruction, and management support to personnel tasked with enforcing the Sanitation requirements.

IV. Microbiological Performance Criteria and Standards

*Summary of Proposal*

As part of the Pathogen Reduction/HACCP proposal, FSIS proposed interim targets for the reduction of *Salmonella* for the major species and for ground meat and poultry. Further, FSIS proposed to require daily testing by slaughter establishments and establishments producing raw ground product in order to verify achievement of the *Salmonella* targets on an ongoing basis. The proposal reflected a central tenet of the FSIS food safety strategy: to be effective in improving food safety and reducing the risk of foodborne illness, HACCP-based process control must be combined with objective means of verifying that meat and poultry establishments are achieving acceptable levels of food safety performance.

FSIS explained in the preamble to the proposal that food safety performance standards, in the form of tolerances or other limits, have been an important feature of the food safety regulatory system for chemical residues (such as those resulting from the use of animal drugs and pesticides) and for pathogenic microorganisms in ready-to-eat meat and poultry products (such as *Listeria monocytogenes* in ready-to-eat products and *Salmonella* in cooked beef). However, performance standards have not in the past been incorporated into the regulatory system for pathogens on raw meat and poultry products.

FSIS recognizes that establishing performance standards for pathogens on raw products raises different and difficult issues. The microbiological safety of a meat or poultry product at the point of final sale or consumption is affected by many factors. Most significantly, unlike other kinds of contaminants, microbiological pathogens can be introduced at many points on the farm-to-table continuum, and once in the product, under certain conditions, the bacteria can multiply. Some pathogens, such as *E. coli* O157:H7, are so virulent that a small number of organisms can pose a significant hazard. Indeed, on that basis the Agency has determined that any amount of *E. coli* O157:H7 will adulterate a meat or poultry product. On the other hand, some pathogens, such as *Salmonella*, ordinarily must multiply to relatively large numbers to cause illness, although the susceptibility of individuals to illness varies widely. Certain segments of the population, such as the very young, the elderly, and persons with compromised immune systems, are particularly vulnerable to illnesses caused by *Salmonella* and other foodborne pathogens.

Therefore, FSIS has not taken the position in this rulemaking that some amount of a pathogen necessarily renders a raw meat or poultry product unsafe and legally adulterated; the proposed targets for pathogen reduction would not have served as a standard for determining whether any particular lot of raw product could be released into commerce. The proposed targets were intended instead as an initial step toward defining levels of food safety performance that establishments would be required to achieve consistently over time. The interim targets and the required testing by establishments were also intended as a first step toward the eventual incorporation of microbial testing as an integral part of process-control validation and verification in facilities operating under HACCP.

*Salmonella* was selected as the target organism because it is the most common cause of foodborne illness associated with meat and poultry products. It is present to varying degrees in all major species. And, interventions targeted at reducing *Salmonella* may be beneficial in reducing contamination by other enteric pathogens.

As interim targets for pathogen reduction, FSIS proposed that the prevalence of *Salmonella* contamination in each of the major species and in raw ground products be reduced by each establishment to a level below the current national baseline prevalence as measured by the FSIS Nationwide Microbiological Baseline Data Collection Programs and Nationwide Microbiological surveys (collectively referred to below as the FSIS baseline surveys) or other available data.

*Role of Microbiological Performance Criteria and Standards in FSIS Food Safety Strategy*

As explained in the ''*Background*'' section of this preamble, the most important objective of this rulemaking is to build into food production processes and the FSIS system of regulation and oversight, effective measures to reduce and control pathogenic microorganisms

on raw meat and poultry products. FSIS has concluded that HACCP-based process control combined with appropriate microbiological performance criteria and standards will achieve this objective.

Because the current regulatory system lacks any performance criteria or standards for harmful bacteria on raw products (other than with respect to *E. coli* O157:H7 on raw ground beef), FSIS inspectors have no adequate basis for judging whether establishments producing raw meat and poultry products are dealing effectively with the food safety hazard posed by harmful bacteria.

The HACCP requirements discussed in the preceding section of this preamble will ensure that all meat and poultry establishments implement science-based process controls designed to prevent and reduce the significant food safety hazards that arise in their particular production processes and products. For slaughter establishments and other establishments producing raw meat and poultry products, this will mean developing controls that address the hazards posed by pathogenic microorganisms as well as other biological, chemical and physical hazards. HACCP principles provide the framework by which establishments target and reduce harmful bacteria on raw meat and poultry products.

To be successful in ensuring food safety, however, HACCP must be coupled with appropriate performance criteria and standards against which the effectiveness of the controls developed by each establishment can be validated and verified. For example, controls designed to prevent the contamination of processed, ready-to-eat meat and poultry products with harmful bacteria would have to be validated as effective in meeting the already-existing requirement that such products be free of harmful bacteria. Without such performance criteria and standards, there would be no objective basis for determining whether a particular HACCP plan is adequate for its food safety purpose. Additionally, there would be no way to determine whether industry or FSIS had met their respective food safety responsibilities.

In this rulemaking, FSIS for the first time proposed microbiological performance standards for raw products. The need for some measure of performance in the area of microbiological contamination was generally supported by the comments FSIS received on its proposal. In response to the comments, FSIS has refined and improved its proposed approach, and is establishing microbiological performance standards for reduction of *Salmonella* in raw products, coupled with performance criteria for use with *E. coli* testing to verify the effectiveness of process controls in slaughter establishments.

These new provisions are the first steps in what FSIS expects to be a long-term effort to ensure that appropriate microbial testing is conducted, and appropriate criteria and standards exist, to reduce the food safety hazards posed by harmful bacteria on raw meat and poultry products. The numerical targets for both the performance criteria and the pathogen reduction performance standards are likely to be changed as new data become available. The targets currently are set at the national baseline prevalence of contamination and reflect what is achievable using available technology. FSIS intends to repeat periodically its baseline surveys, on which the criteria and standards are based. FSIS will collect additional data on *Salmonella* by testing products in establishments pursuant to the performance standards and on *E. coli* through close monitoring of establishments' experience and test results associated with that mode of process control verification. These new data, together with relevant epidemiologic data, scientific research, and new technologies, will be considered by FSIS when proposing future revisions to the performance criteria and testing requirements for *E. coli* and the pathogen reduction performance standards for *Salmonella*. New information and data also may support different standards and different approaches to microbial testing.

FSIS is committed to the development and implementation of future performance standards, as needed, to achieve the FSIS's public health goal of reducing the incidence of foodborne illness associated with harmful bacteria on raw meat and poultry products. FSIS is also concerned that standards achieve this public health goal in a manner that encourages industry innovation and minimizes regulatory burdens on the regulated industry. The pathogen reduction performance standards promulgated in this regulation will be implemented on the basis of a statistical evaluation of the prevalence of bacteria in each establishment's products, measured against the nationwide prevalence of the bacteria in the same products. These standards will not be used to judge whether specific lots of product are adulterated under the law. As more research is done and more data become available, and as more sophisticated techniques are developed for quantitative risk assessment for microbiological agents, it may be possible and appropriate to develop performance standards that use a different approach. Consideration may also be given to the possibility of establishing similar standards for other pathogenic microorganisms. FSIS will continue to work with the scientific community in this area.

The microbiological performance standards set out in this rulemaking are part of a fundamental shift in FSIS regulatory philosophy and strategy. The current inspection system relies heavily on intensive ''command-and-control'' prescription of the means by which meat and poultry establishments must achieve statutory objectives concerning food safety, sanitation, product wholesomeness, and prevention of economic adulteration and misbranding. As explained in the ''*Background*'' section of this preamble, in FSIS's ANPR ''FSIS Agenda for Change: Regulatory Review,'' and in the January, 1996, National Performance Review report ''Reinvention of Food Regulations,'' FSIS plans to shift from this reliance on command and control regulations to much greater reliance on performance standards. FSIS believes that public health and consumer protection goals can be achieved more effectively, in most cases, by converting command-and-control regulations to performance standards, which provide industry with the flexibility to devise the optimal means of achieving food safety objectives. FSIS would verify compliance with such performance standards through inspection and other forms of oversight.

*Overview of Final Rule*

Comments on the proposed rule's microbial testing provisions have resulted in a number of changes to those provisions. As discussed in the ''Response to Comments'' section, below, FSIS received numerous comments supporting the concept of microbiological performance criteria or standards, but also received many comments urging alternatives to the specific approach proposed by FSIS, including testing for organisms other than *Salmonella*.

The Agency actively sought out comment and information on the issue of target organism(s) to be selected for process control verification and pathogen reduction purposes in this regulation. In the proposal, FSIS stated that ''the Agency recognizes that there are other foodborne human pathogens of public health concern that can be isolated from raw meat and poultry product. The Agency would welcome

comments on the targeting of other pathogens in addition to or in lieu of *Salmonella*'' (60 FR 6800). As noted earlier in this preamble, during the comment period FSIS held many meetings to solicit comment on various issues, including microbiological criteria and standards. Microbiological criteria and standards were discussed in detail at the FSIS-sponsored scientific conference held in Philadelphia, Pennsylvania, on May 1 and 2, 1995, titled ''The Role of Microbiological Testing in Verifying Food Safety.'' This conference was open to the public and was announced in the Federal Register on March 24, 1995 (60 FR 15533). An expert panel at that conference endorsed the role of microbiological testing in accordance with appropriate criteria or standards, but suggested that mandatory establishment testing focus on a quantitative assay for generic *E. coli* rather than the proposed qualitative assay for *Salmonella*. The panel stated that a quantitative assay for the more commonly occurring generic *E. coli* is a more effective process control indicator with respect to the prevention of contamination of meat and poultry by feces and associated bacteria.

FSIS also held a series of six issue-focused public meetings in September, 1995. During a preliminary public meeting on August 23, 1995, at which issues were identified and the meeting agenda was established, participants decided that a full day should be devoted to further public discussion of pathogen reduction standards and microbial testing. The agenda for the six meetings appeared in the Federal Register on August 31, 1995 (60 FR 45381). The issues discussed on September 27 included: (1) the scientific and policy basis for establishing targets; (2) whether *Salmonella* is the appropriate organism for some or all species; (3) whether other pathogens would be preferable for some or all animal species; (4) the utility of targets for *E. coli* or other non-pathogenic indicator organisms as a means of controlling and reducing pathogenic microorganisms; (5) the advantages and disadvantages of targets based on the prevalence of detectable contamination vs. targets based on the number of organisms present; and (6) the need for pathogen reduction targets for raw ground products in general and in establishments that both slaughter animals and produce ground product.

At the September 27, 1995, issue-focused meeting, there was additional comment in favor of testing for an organism other than *Salmonella*, such as generic *E. coli*, that has a strong track record in the industry as a good organism to use for process control verification testing. There was, however, continued strong support for raw product testing targeted at pathogens, such as *Salmonella*, and support for pathogen reduction as the primary goal of such testing.

At the meetings, FSIS distributed issue papers on the various issues being addressed, based in large part on comments already received. The issue paper on Pathogen Reduction Performance Standards and Microbial Testing stated that the two most common concerns in the comments received to that date were the proposed selection of *Salmonella* as the indicator organism and the frequency of proposed testing. It stated that although some commenters recommended finalizing *Salmonella* testing, others recommended using *E. coli* instead of or in addition to *Salmonella*. The issue paper stated the Agency's current thinking on the organism to be selected, the need for daily testing at every establishment, and the necessity of testing each species slaughtered and each ground product produced. In the issue paper FSIS stated, among other things, that it was ''seriously considering generic *E. coli* as the process control indicator organism and the adoption of a quantitative *E. coli* standard as a measure of process control with respect to the prevention and reduction of fecal contamination in slaughter plants.'' FSIS also stated that it was considering setting forth pathogen-specific performance standards as a direct measure of accountability for controlling and reducing harmful bacteria in raw meat and poultry products and that *Salmonella* targets might be adopted as performance standards and enforced by FSIS through its own compliance monitoring. The Agency published the issue papers in the Federal Register on October 24, 1995 (60 FR 54450).

Based on the large body of written and oral comments FSIS has received on this issue, the Agency has decided not to use *Salmonella* both as a target for pathogen reduction and as an indicator of process control. FSIS has decided to adopt pathogen reduction performance standards targeting *Salmonella*, as proposed, except that FSIS, not the establishments, will conduct testing for the pathogen to verify compliance. FSIS also has decided to require establishments slaughtering livestock and poultry to conduct routine testing for generic *E. coli* (instead of the proposed use of *Salmonella* tests) as an ongoing, objective process control indicator for fecal contamination, and to establish performance criteria by which results can be evaluated.

Process Control Verification Performance Criteria

Under the FMIA and the PPIA, meat and poultry establishments inspected by FSIS are required to maintain sanitary conditions sufficient to prevent contamination of products with filth and to prevent meat and poultry products from being rendered injurious to health (21 U.S.C. 601(m) and 608 (FMIA); 21 U.S.C. 453 (g) and 456 (PPIA)). A grant of inspection by FSIS is contingent upon an establishment meeting this responsibility. FSIS is authorized by law to issue regulations establishing appropriate sanitation requirements. Meat and poultry products are deemed legally adulterated, whether or not they are shown to be contaminated, if prepared, packed, or held under insanitary conditions whereby they may have become contaminated with filth or may have been rendered injurious to health.

In slaughter establishments, fecal contamination of carcasses is the primary avenue for contamination by pathogens. Pathogens may reside in fecal material and ingesta, both within the gastrointestinal tract and on the exterior surfaces of animals going to slaughter. Therefore, without care being taken in handling and dressing procedures during slaughter and processing, the edible portions of the carcass can become contaminated with bacteria capable of causing illness in humans. Additionally, once introduced into the establishment environment, the organisms may be spread from carcass to carcass.

Because the microbial pathogens associated with fecal contamination are the single most likely source of potential food safety hazard in slaughter establishments, preventing and removing fecal contamination and associated bacteria are vital responsibilities of slaughter establishments. Further, because such contamination is largely preventable, controls to address it will be a critical part of any slaughter establishment's HACCP plan. Most slaughter establishments already have in place procedures designed to prevent and remove visible fecal contamination.

There is general agreement within the scientific community that generic *E. coli* is the best single microbial indicator for fecal contamination. FSIS, therefore, is requiring that establishments slaughtering livestock or poultry begin testing for *E. coli* (*E. coli*, biotype I, nonspecific as to species, hereinafter referred to simply as *E. coli*) at the

frequency and following the procedures described in ''*Process Control Verification; E. coli Performance Criteria and Testing*'' section, below, 6 months after publication of the final rule. FSIS considers the required testing to be essential for meeting current statutory requirements for sanitation and the prevention of adulteration. This testing also will play an integral role in the successful implementation of HACCP in slaughter establishments. In addition, FSIS is establishing process control performance criteria for fecal contamination based on the frequency and levels of contamination of carcasses with *E. coli*.

As explained below, FSIS is establishing performance criteria to reflect the prevalence and levels of contamination of *E. coli* on carcasses produced nationwide, as determined by FSIS baseline surveys. The performance criteria and required testing will provide each slaughter establishment and FSIS with an objective means of verifying that the establishment is achieving this level of performance and maintaining it consistently over time. Test results that show an establishment is meeting or exceeding the criteria provide evidence that the establishment is maintaining adequate process control for fecal contamination.

FSIS is purposely using the term performance ''criteria'' rather than performance ''standard'' in this context because no single set of test results can demonstrate conclusively that adequate process control for fecal contamination is or is not being maintained. As explained below, if test results do not meet the applicable criterion, it raises questions about the adequacy of the process control. FSIS intends to consider the establishment's results and corrective actions, together with other information and inspectional observations, in evaluating whether a problem exists that requires regulatory action or other measures to protect consumers and ensure compliance with the law.

Also, as discussed below, although FSIS is proceeding with the final rule at this time, it is inviting comment on technical aspects of the process control performance criteria and the required testing. FSIS requests that comments on the *E. coli* performance criteria and testing requirement be focused on the technical aspects of the rule, i.e., the manner in which the criteria are articulated, the sampling frequency, and the sampling and testing methodologies.

FSIS intends to update the criteria periodically to ensure that the criteria adequately reflect an appropriate level of performance with respect to prevention and removal of fecal contamination and associated bacteria from livestock and poultry carcasses.

Pathogen Reduction Performance Standards

As proposed, FSIS is adopting pathogen reduction performance standards using *Salmonella* as the target organism. The most significant difference between the proposal and this final rule is that, as explained above, FSIS is not relying on *Salmonella* to be a process control indicator, as well as the target organism for the pathogen reduction performance standard. Establishments will not be required by this final rule to test for *Salmonella*, as had been proposed. Instead, FSIS will obtain samples from slaughter establishments and establishments producing raw ground product or fresh pork sausage and test those samples for *Salmonella* to ensure that the pathogen reduction performance standards are being met.

As proposed, FSIS will require that no establishment can have a prevalence of *Salmonella* contamination, as a percentage of positive samples from carcasses and percentage of positive samples from raw ground product, greater than the baseline prevalence for each raw product as reflected in the FSIS baseline survey for each species or other category of raw product. These targets constitute performance ''standards'' rather than performance ''criteria'' because, following an establishment's implementation of HACCP, FSIS will require that the establishment meet the standard consistently over time as a condition of maintaining inspection.

The *Salmonella* pathogen reduction performance standards are not, however, lot release standards, and the detection of *Salmonella* in a specific lot of raw product will not by itself result in the condemnation of that lot. The performance standards and FSIS's enforcement approach, as discussed below, are intended to ensure that each establishment is consistently achieving an acceptable level of performance with regard to controlling and reducing harmful bacteria on raw meat and poultry products.

FSIS considers systematic reduction of pathogenic microorganisms in raw product to be an essential responsibility of meat and poultry establishments under the current statutes. As a condition of inspection and to avoid the production of product that would be deemed legally adulterated, establishments must utilize available process control methods and technologies as necessary to achieve applicable pathogen reduction standards.

*Process Control Verification; E. coli Performance Criteria and Testing*

Establishments that slaughter livestock and poultry currently have an obligation to control the slaughter and sanitary dressing process so that contamination with fecal material and other intestinal contents is prevented. This means that establishments must maintain sanitary conditions and use good manufacturing practices to avoid contamination with visible feces and ingesta and associated bacteria. When such visible contamination occurs, establishments are expected to detect it and physically remove it through knife trimming or other approved removal procedures. The present FSIS verification activity to demonstrate that this has been accomplished is organoleptic inspection. FSIS inspectors apply a zero tolerance performance standard for visible feces and ingesta on dressed carcasses. As a practical matter, however, additional measures must be taken if inspectors are to assess the extent to which the invisible bacteria associated with feces and ingesta may be present on the carcass.

FSIS has concluded, based on its proposal and the comments received, that the current practice of organoleptic examination by inspectors and the physical removal of visible contamination by establishments needs to be supplemented with an establishment-conducted microbial verification activity. This microbial testing is designed to verify, for the establishment and FSIS, that the establishment has controlled its slaughter process with respect to prevention and removal of fecal material and ingesta and associated bacteria.

Rationale for Using E. coli Tests to Verify Process Control

*E. coli* testing is more useful than the originally proposed *Salmonella* testing in verifying that a slaughter process is under control. This was expressed in numerous comments on the proposal, comments generated in FSIS public hearings, and the results of the scientific and technical conference on the Role of Microbiological Testing in Verifying Food Safety. The expert panel at that conference stated:

> Microbial testing is an essential element for verifying process control of raw meat and poultry. A variety of indicators exists, but the panel concluded that quantitative measurement of *Escherichia coli* would be more effective than qualitative *Salmonella* testing. When processes are under control for

*E. coli,* the potential presence of enteric pathogens will be minimized.[1]

The panel compared selection criteria for the choice of an indicator organism and considered alternative microbial targets such as *E. coli, Enterobacteriaceae,* and aerobic plate count, to be used alone or in combination with *Salmonella* testing. In reaching its conclusion that *E. coli* would be the most effective measure of process control for enteric pathogens, the panel considered the ideal characteristics of microbial indicators for the stated purpose. Important characteristics of *E. coli* are:

- There is a strong association of *E. coli* with the presence of enteric pathogens and, in the case of slaughtering, the presence of fecal contamination.
- *E. coli* occurs at a higher frequency than *Salmonella,* and quantitative *E. coli* testing permits more rapid and more frequent adjustment of process control.
- *E. coli* has survival and growth characteristics similar to enteric pathogens, such as *E. coli* O157:H7 and *Salmonella.*
- Analysis for *E. coli* poses fewer laboratory safety issues and testing at the establishment site is more feasible than such testing with *Salmonella.*
- There is wide acceptance in the international scientific community of its use as an indicator of the potential presence of enteric pathogens.

In the panel's view, microbial testing should be used to demonstrate process control; they concluded that a proximate indicator for enteric pathogens is needed for demonstrating process control with respect to fecal contamination. The panel concluded that *E. coli* would be the single most effective indicator for this purpose. The panel's conclusion reinforces previous statements by the NAS that ''at present, *E. coli* testing is the best indicator of fecal contamination among the commonly used fecal-indicator organisms.'' [2] FSIS agrees with these conclusions.

If future scientific research identifies another organism or group of organisms which would prove as effective in measuring process control for fecal contamination, FSIS would consider appropriate revisions to the regulations.

Use of Baseline Values to Establish E. coli Performance Criteria

The presence of some microorganisms on raw meat and poultry is unavoidable and highly variable. The goal of process control in a slaughter establishment is to minimize initial microbial contamination of the carcasses, remove harmful microorganisms that nonetheless may be present, control the proliferation of any remaining microorganisms, and prevent re-contamination. Process control criteria based on data from FSIS's nationwide baseline surveys will aid establishments in achieving this goal and complement the transition to HACCP.

FSIS collects data to develop and maintain a general, ongoing microbiological profile of carcasses for selected microorganisms of varying degrees of public health concern, and organisms or groups of organisms of value as indicators of general hygiene or process control, and to document changes in the profiles over time. FSIS's Nationwide Microbiological Baseline Data Collection Programs provide for sampling over a year's time to account for possible seasonal variations. This was the approach taken in collecting data from carcasses for all slaughter classes: steer/heifer, cow/bull, broilers, market hogs, and turkey. Sampling is designed to represent the vast majority of raw meat and poultry products produced, in most cases approximately 99% of the product produced. These programs are nationwide in scope. Enough samples are taken to enable the Agency to describe the annual distribution of test results. The number of samples collected also allows for control of sampling variation and non-sampling errors (such as missing samples, incomplete data, and inconsistent data). By contrast, FSIS's Nationwide Surveys provide a snapshot over a specified period of time less than a year. They involve a large enough number of samples to ensure a reasonable level of precision for estimates, given the prevalence of the microorganisms included in the surveys. This was the approach taken in developing baseline data for other raw meat and poultry products: ground beef (at inspected establishments and at retail), ground chicken, ground turkey, and fresh pork sausage.

For the current baselines, carcass samples were taken from fresh, whole chilled carcasses after slaughter and dressing but before any further processing took place. Samples were analyzed fresh, not frozen, to gather more accurate data on numbers of microorganisms, especially those that are more susceptible to freezing, such as *Campylobacter jejuni/coli.* FSIS personnel collected the samples tested in the surveys using standard Agency procedures for taking aseptic samples from animal tissues and for ensuring random sample selection.[3,4]

Reports of FSIS baseline programs and surveys are issued after testing results have been compiled and analyzed. Reports have been completed for cattle, broiler chickens, hogs, ground beef, ground chicken, and ground turkey. The collection and analysis of samples for the turkey baseline program and the fresh pork sausage survey will be underway soon; criteria for turkeys and fresh pork sausage will be determined upon completion of the sampling and analysis of results.

Establishment of E. coli Performance Criteria to Verify Process Control

Using data from the baseline surveys described in the preceding section, FSIS has developed animal species-specific, minimum performance benchmarks, or performance criteria, for *E. coli* on carcasses.

As explained above, these criteria are not enforceable regulatory standards. The *E. coli* performance criteria are intended to assist slaughter establishments and FSIS in ensuring that establishments are meeting their current statutory obligation to prevent and reduce contamination of carcasses by fecal material, ingesta, and associated bacteria. The criteria are flexible and are subject to amendment as FSIS and the industry gain experience with them and accumulate more data on establishment performance. The criteria are intended specifically to provide an initial basis upon which slaughter establishments and FSIS can begin to use microbial testing to evaluate the adequacy of establishment process controls to prevent feces, ingesta, and other animal-derived contaminants from contaminating the tissues intended for use as food.

FSIS has designed the criteria so that establishments meeting them are achieving results, in terms of *E. coli* levels, consistent with those being achieved by a large majority of the slaughter production in the United States, as reflected in the FSIS baseline

[1] Expert Panel's Summary Report and Recommendations, Scientific and Technical Conference on Role of Microbiological Testing in Verifying Food Safety, May 1–2, 1995.

[2] Subcommittee on Microbiological Criteria, Committee on Food Protection, Food and Nutrition Board, National Research Council. 1985. ''An Evaluation of the Role of Microbiological Criteria for Foods and Food Ingredients.'' National Academy Press, Washington, D.C.

[3] Food Safety and Inspection Service. 1994. Nationwide Broiler Chickens Microbiological Baseline Data Collection Program: Broiler Chicken Sample Collection Procedures, 2/18/94. U.S. Department of Agriculture, Washington, D.C.

[4] Food Safety and Inspection Service. 1993. Nationwide Beef Microbiological Baseline Data Collection Program: Cow/Bull Sample Collection Procedures, 8/1/93. U.S. Department of Agriculture, Washington, D.C.

surveys for each species of livestock and poultry.

The *E. coli* performance criteria are expressed in terms of a statistical procedure known as a ''3-class attributes sampling plan'' applied in a moving window. This procedure specifies cutoffs (denoted m and M, with m<M) for quantitative *E. coli* levels so as to define three classes of results: acceptable, marginal, and unacceptable. The definitions are:

Acceptable—result ≤ m
Marginal—result > m and ≤ M
Unacceptable—result > M

Under this approach, m and M are defined in relation to the distribution of *E. coli* results for each slaughter class. The Agency has used as the starting point for establishing the cutoff for m the 80th percentile of current industry wide performance, in terms of *E. coli* levels, for each slaughter class. The starting point for establishing M is the 98th percentile of industry performance. Thus, if the criterion for any species were set precisely at those percentiles, a set of test results indicating performance in the 80th to 98th percentile range, according to FSIS's Nationwide Microbiological Baseline Data Collection Program results, would be deemed ''marginal,'' and, as discussed below, would raise a question about the adequacy of the establishment's process control. Expressed in another way, ''marginal'' results would be within the worst 20% of overall industry performance in terms of *E. coli* counts. Similarly, results worse than the 98th percentile (M) are within the worst 2% of overall industry performance. Any single result exceeding M is, therefore, deemed ''unacceptable.''

TABLE 1.—DISTRIBUTION OF E. COLI BY SLAUGHTER CLASS

| Percentile | Steer/heifer | Cow/bull | Broilers | Hogs |
|---|---|---|---|---|
| 50th (median) | Negative* | Negative* | 29 cfu/ml | Negative* |
| 80th (m) | Negative* | Negative* | 80 | 10 cfu/cm$^2$ |
| 90th | Negative* | 10 cfu/cm$^2$ | 180 | 150 |
| 95th | 10 cfu/cm$^2$ | 40 | 360 | 880 |
| 98th (M) | 80 | 300 | 1100 | 6,800 |
| 99th | 290 | 2200 | 3300 | 33,000 |

*Negative by the method used in the baselines which had a minimum detectable level of 5 cfu/cm$^2$ of carcass surface area.

Table 1 shows the level at which *E. coli* has been found on carcasses, by slaughter class as a percent of all such product. For example, the data show that 80% of broilers tested at or below 80 colony forming units per milliliter (cfu/ml), while 90% tested at or below 180 cfu/ml. More detailed descriptions of the distribution of numbers of *E. coli* found per carcass species are provided in FSIS's baseline reports.

To make the criteria as simple and easy to use as possible, consistent with the accepted laboratory practice of diluting samples successively by factors of 10 to obtain bacteria counts, FSIS has elected to express the criteria in terms of powers of 10 (i.e., 10, 100, 1000, etc.). As shown in Table 2, this results in m and M being the closest power of 10 to the actual numbers estimated for the 80th and 98th percentiles from the baseline data.

Because the Agency's baseline survey work on turkeys is still underway, no *E. coli* criterion is being established at this time for that slaughter class.

TABLE 2.—M AND M VALUES FOR E. COLI PERFORMANCE CRITERIA

| Slaughter class | m | M |
|---|---|---|
| Steer/Heifer | (1) | 100 |
| Cow/Bull | (1) | 100 |
| Broiler | 100 | 1000 |
| Hogs | 10 | 10,000 |

[1] Negative.

It should be noted that ''negative,'' in this context, is defined by the sensitivity of the method used in the Baseline Surveys, which was 5 cfu/cm$^2$ of carcass surface area for cattle and hogs.

FSIS is requiring the use of an analytic method approved by the Association of Official Analytic Chemists or any method validated by a scientific body in collaborative trials against the three tube Most Probable Number (MPN) method and agreeing with the 95 percent upper and lower confidence limit of the appropriate MPN index.

FSIS has concluded that, at some point, the number of samples testing in the marginal range raises a significant question about the adequacy of an establishment's process control, and has defined that point for purposes of these criteria as more than 3 results above m within any consecutive 13 samples tested. This point was established based on the following analysis.

There occasionally will be test results that exceed the acceptable level, m, because of variations or aberrations in establishment performance, sampling, etc., that do not reflect the state of overall process control. FSIS believes that the performance criteria and approach to evaluating test results should avoid raising a significant process control question on the basis of chance results, but should be sensitive enough to provide a reasonably high likelihood of detecting performance that falls significantly short of the national baseline levels. FSIS has decided that it is appropriate to evaluate test results in a manner that ensures that there is an 80% probability that establishments actually operating at the acceptable performance level will achieve results that are deemed to satisfy the criteria. This is the same statistical approach FSIS took in its proposed approach to evaluating an establishment's *Salmonella* test results, using the moving window approach to evaluating process control verification tests (see pages 6798–6805 of the Pathogen Reduction/HACCP proposal).

Using this approach, it can be predicted statistically that slaughter establishments that are operating at the acceptable performance level reflected by m will, with an 80% probability, have three or fewer results above m (denoted as c) within every 13 samples tested (denoted as n). FSIS will require slaughter establishments to record and evaluate *E. coli* results in a ''moving window'' of 13 consecutive results. A moving window provides a continuous picture of establishment performance and is the preferred statistical approach for assessing ongoing processes (as opposed to sampling specific lots of product for contaminants). Thus, the presence of more than three marginal results within any 13 consecutive samples, or the ''window,'' will be indicative of an operation failing to meet the criteria.

Use of a different probability level, such as a 70% or 90% probability of getting acceptable test results if establishments are operating at the specified level would result in different values for c and n (namely, c=3 and

n=15 using the 70% probability level, and c=3 and n=10 using the 90% probability level). Using 70% as the statistical criterion for setting c and n would result in too many chance failures of the criteria, while using 90% would make it too difficult to detect potential process control problems. It is the judgment of the Agency that use of the 80% probability level strikes a reasonable balance.

In summary, if the results of one test are above M, or if more than 3 of 13 test results are above m, a significant question is raised as to whether the establishment is maintaining adequate process control and will trigger further review of establishment process control. FSIS stresses again that these *E. coli* criteria are guidelines, not regulatory standards. Ideally, each establishment will develop its own equally or more effective criteria for process control based on its own data and/or industry-developed benchmarks. FSIS encourages establishments, in the context of their HACCP plans, to apply their own, establishment-specific criteria to ensure process control.

FSIS also is inviting comment on the approach it has taken to expressing its *E. coli* performance criteria for verifying process control. FSIS recognizes that there is more than one possible approach and welcomes comments and suggestions.

Sampling Frequency for E. coli Testing

FSIS has chosen to use production volume as the basis for determining the frequency at which establishments will conduct testing for *E. coli*. In the proposed rule, FSIS proposed to require all slaughter establishments and establishments producing ground meat and poultry, regardless of size or volume, to conduct one test for *Salmonella* each day. This was based on the premise that verifying that a process is ''in control'' is more a function of specific establishment characteristics than the amount of product being produced. However, commenters suggested and FSIS recognizes that there may be striking differences in the ways in which high and low volume establishments operate, which can influence the ability of the establishment to keep processes in control. High volume establishments may receive animals for slaughter from a number of different sources for each day's production; there may be several shifts, and production personnel are often more transient; there may be multiple supervisors; and there may be much greater complexity in the overall slaughter process. In contrast, a low volume establishment will have a smaller and possibly more stable work-force, often supervised by an owner-operator, and may employ relatively simple procedures that are performed consistently over time. This does not negate the need in low volume establishments for microbial verification of a HACCP plan; however, under these circumstances it may not be as essential for very low volume establishments to undertake daily microbial testing, as initially proposed. By adopting a volume-based system, the testing frequency will, by definition, be highest in large establishments producing the most product, while the number of tests will be minimized in smaller establishments.

The majority of commenters who opposed daily testing stated that such a testing requirement would place an unfair cost burden and have a negative financial impact on small establishments, as it would require the same expenditure for testing by establishments that slaughtered one or two animals per day as those slaughtering several thousand daily. It was also noted that there is a public health consequence to the proposed approach. If a process control problem detectable by microbial testing existed in a high volume establishment that tested only once a day, a great deal more potentially contaminated product would be produced and distributed before enough microbial tests were performed to show the problem existed than would be the case in a small volume establishment. These issues are addressed by the switch to a volume-based testing system.

There is no single method for determining the frequency of microbial testing within a volume-based testing system that will be equally effective in all establishments. Testing frequencies are ideally determined on an establishment-by-establishment basis, taking into account a number of variables, including differences in sources of raw materials, the type and nature of the process, and the consistency of microbial test results over time. Nonetheless, for both public health and process control verification reasons, FSIS considers it necessary and reasonable to require a minimum frequency of testing sufficient to result in completion of at least one *E. coli* test window (13 samples) per day in the highest volume establishments for each species. This will provide a daily set of results adequate to verify process control in the highest volume establishments. Accumulation of results over a longer period of time will be an acceptable basis for verifying process control in lower volume establishments.

Based on these principles and conclusions, the required minimum frequencies for *E. coli* testing for each slaughter species are as shown in Table 3.

TABLE 3.—E. COLI TESTING FREQUENCIES

| | |
|---|---|
| Cattle ..... | 1 test per 300 carcasses. |
| Swine ..... | 1 test per 1,000 carcasses. |
| Chicken ... | 1 test per 22,000 carcasses. |
| Turkey ..... | 1 test per 3,000 carcasses. |

The frequencies were derived by first rank-ordering all slaughter establishments by species based on total annual production. This ranking, which was based on data from FY 1993 and FY 1994, revealed that establishment production volumes vary widely and that there are appreciable differences in the concentration of business among the industries. In cattle slaughter, 12 of 912 establishments accounted for over 42% of production, with the smallest of these slaughtering about one million head annually. On the small volume end, 620 establishments slaughtered fewer than 1000 head annually and together accounted for about one-half of one percent (0.5%) of national slaughter production. By contrast, there are ten or fewer very low volume establishments slaughtering chickens, and production is spread more evenly over the 240 establishments on the FSIS FY 1994 inventory of establishments. 42 of 240 slaughter establishments accounted for 40% of production.

FSIS has selected sampling frequencies so that in the subgroup of establishments accounting for 99% of total production for each species, the 5% of establishments with the highest production volume would each have to conduct a minimum of 13 *E. coli* tests, or at least one complete test window, each day. In addition, with these frequencies, 90% of all cattle, 94% of all swine, 99% of all chicken, and 99% of all turkeys will be slaughtered in establishments conducting a minimum of one *E. coli* test per day.

The above frequencies notwithstanding, FSIS has concluded that all establishments must conduct sampling at a frequency of at least once per week to provide a minimum, adequate basis for process control verification using *E. coli* testing. However, establishments with very low volumes, annually slaughtering no more than 6,000 cattle, 20,000 swine, or a combination of such livestock not to exceed a total of 20,000 with a maximum of 6,000 cattle, or 440,000 chickens or 60,000 turkeys (or a combination of such poultry not to

exceed a total of 440,000, with a maximum of 60,000 turkeys), will be required to sample once per week only until a sampling window that verifies process control has been completed and the results indicate that the slaughter process is under control. Establishments slaughtering more than one species would sample the species slaughtered in greater number. Once these criteria have been met, these establishments will be required to complete a new sampling window that verifies process control only once each year, in the 3-month period of June through August, or when a change has been made in the slaughter process or personnel.

The Agency is permitting these very low volume establishments to conduct as few as 13 tests per year, in part because of their relatively simple and stable production environments. The slaughtering equipment in many cases may consist merely of a skinning bed, hoist, bonesaw (for poultry establishments, a small scalding tank, small defeathering device), and/or several types of knives. There are fewer personnel and there is less turnover in general. Of course, these establishments do change. Should there be any substantial changes in installed equipment or personnel, a new sampling window must be completed. These establishments must also complete a successful sampling window annually, regardless of whether there have been any substantial changes, in order to verify that the performance criteria continue to be met. Many small, nonsubstantial changes, in aggregate, may have an impact on process control. This annual testing must be conducted during the summer months of June through August, when there is a seasonal peak in the occurrence of foodborne diseases attributable to the major bacteria pathogens. Published and summary reports of Centers for Disease Control and Prevention (CDC) outbreak and sporadic disease surveillance have documented this seasonal trend for *Salmonella spp*.[5,6] and for *Campylobacter jejuni/coli*.[7] Although national surveillance for *E. coli* O157:H7 is relatively new and data are not available, Washington State surveillance has documented a similar seasonal trend for that pathogen.[8] The proposed requirement of one *Salmonella* sample per day would have assured testing during this period.

Therefore, the regulation specifies that when sampling and testing is done annually, instead of continually, it be conducted within a 13-sample window between June and August each year. This annual sampling must occur during this period, regardless of when other sampling windows may have occurred. Completing a successful sampling window annually will verify that the slaughter process continues to meet the performance criteria or will point to the need to reassess and revise the HACCP plan.

Another reason for this approach to very low volume establishment testing is that the total risk of exposure to enteric pathogens from product produced at such establishments is assumed to be small and roughly proportional to the amount of product produced. Eighty-one percent of establishments slaughtering cattle would meet this low volume criteria; however, these establishments together supply only 1.5% of the total national production. Further, establishments meeting these low volume criteria constitute 86% of all swine establishments, accounting for 1.3% of overall production. Thirteen percent of all establishments slaughtering chicken would meet this low volume requirement; however, these establishments together supply only 0.05% of total national production. Similarly, 42% of all turkey establishments are low volume establishments accounting for only 0.1% of production.

FSIS intends that establishments operating under a validated HACCP system use microbial testing in their process control verification activities, and is requiring that slaughter establishments under HACCP use *E. coli* testing for that purpose. As noted above, however, the Agency acknowledges that there may be other, perhaps equally effective alternative approaches for determining sampling frequencies for *E. coli* testing for process control verification in slaughter establishments with a carefully designed HACCP system. The Agency is aware that comparable models have been developed in the context of quality assurance programs. These models, however, are part of programs that, like HACCP, involve more than mere statistical sampling, and usually are much more oriented to specific establishment/process/product combinations. Such models cannot easily be transferred to a nationwide collection of producers of a product, each with unique characteristics. The frequency rule established in this regulation recognizes the relevance of establishment characteristics in the area of verification, as in other facets of the HACCP plan, and therefore allows slaughter establishments to alter frequencies as appropriate for their circumstances when they institute HACCP. That is, slaughter establishments under HACCP may use a sampling frequency other than that provided for in the regulation, if the alternative sampling frequency is an integral part of the establishment's HACCP verification procedures and if FSIS does not determine, and notify the establishment in writing, that the alternative frequency is inadequate to verify the effectiveness of the establishment's processing controls. Establishments electing to institute HACCP prior to the dates required may use an alternative sampling frequency upon presentation to FSIS of data demonstrating the adequacy of that sampling frequency for verification of process controls to prevent fecal contamination.

Establishments currently using an alternative *E. coli* sampling frequency for process control purposes, but not yet under a HACCP plan, will have to test at the frequencies specified in the regulation unless they have been granted an exemption by FSIS. However, after consideration of comments received on this rule that may result in protocol changes affecting all establishments, and publication of a Federal Register document addressing the comments, FSIS will consider requests for such exemptions on a case-by-case basis, upon the timely submission to FSIS of data demonstrating the adequacy of the alternative frequency for verification of process controls to prevent fecal contamination.

Sampling and Analytical Methodology

Carcasses within the same establishment and in different establishments must be sampled and analyzed in the same manner if the results are to provide a useful measure of process control. Such consistency also will facilitate FSIS verification activities. As discussed below, the performance criteria are applicable to each type of carcass, industry-wide, based on FSIS's national baseline survey data. Because each establishment's performance is measured against the

[5] Bean, N.H. and P.M. Griffin. 1990. Foodborne Disease Outbreaks in the United States, 1973–1987. J. Food Protection. 53:804–817.

[6] Centers for Disease Control and Prevention. 1995. Salmonella Surveillance, Annual Tabulation Summary, 1993–1994. U.S. Department of Health and Human Services, Public Health Service, Atlanta, GA.

[7] Tauxe, R.V., N. Hargrett-Bean, C.M. Patton, and I.K. Wachsmuth. 1988. *Campylobacter* Isolates in the United States, 1982–1986. MMWR. 37 (SS–2):1–13.

[8] Ostroff, S.M., J.M. Kobayshi, and J.H. Lewis. 1989. Infections with *Escherichia coli* O157:H7 in Washington State. JAMA 262(3):355–359.

performance of all surveyed establishments producing the same kind of product, it is essential that all like establishments adhere to the same basic sampling and analysis requirements.

Each establishment is responsible for having written sampling procedures that are to be followed by a designated employee or agent. Samples are to be taken randomly at the required frequency. If an establishment runs more than one line, the lines from which samples are to be taken also are to be selected randomly. Samples from livestock carcasses are to be collected by a nondestructive method that requires a commercially available sampling sponge to be rubbed on the carcass surface after the carcass has been chilled in the cooler for 12 hours or more after slaughter. Establishments are required to take samples from three sites on each carcass. These three sites are the same ones that were used by FSIS when conducting the baseline studies for cattle and swine. On cattle carcasses, establishments will take samples from the flank, brisket, and rump areas; on swine carcasses, samples will be taken from the ham, ''belly,'' and jowl areas. The sponge is to be placed afterwards in an amount of buffer to transfer any *E. coli* to a solution, which then is analyzed for *E. coli.* Samples from poultry carcasses will be collected by taking whole birds from the end of the chilling process, after the drip line, and rinsing them in an amount of buffer appropriate for the type of bird being tested.

The sponge sampling technique to be used on swine and cattle carcasses has been subject to many studies. A sponge technique has been reported by Dorsa *et al.*[9] and others, including Gill *et al.*[10], as an acceptable means of in-plant sampling to detect fecal contamination.

The excision method for sample collection would not be acceptable for routine sampling to verify process control because this defaces the carcass, and some establishments would be required to sample 13 carcasses per day. Instead, for both cattle and swine carcasses, the sponge method requires that 100 $cm^2$ at each of the three sites be sampled by swabbing, for a total area of 300 $cm^2$ compared to the 60 $cm^2$ area of excised tissue analyzed in the baseline studies for cattle and swine. The results would still be reported on a square centimeter basis. The larger sampling area for the swabbing method is expected to provide results comparable to the excision technique.

The exact correlation between the sponging technique and the excision technique used during the baseline surveys is being assessed by ARS. Currently available results indicate a high degree of correlation between the two. These studies and any other new microbial sampling data will be made available to the public. This sponging technique will also be used in the FSIS *Salmonella* program. FSIS is continuing to improve the sponging technique and welcomes comments.

FSIS considered providing that samples be taken from only one site on livestock carcasses: from the brisket on cattle and the belly area on swine. Sampling from one site has advantages. It would be less labor intensive. Further, sampling from one site might pose fewer worker safety problems than sampling from three sites because, for the latter option, a ladder generally is needed to reach the rumps of the suspended carcasses. Nonetheless, FSIS has determined that slaughter establishments must take samples from the three sites from which samples were drawn during the baseline studies or programs in the absence of data demonstrating that one-site sampling also will provide results comparable to the baseline survey data. The Agency invites comments on its requirement that establishments collect samples from the specified three sites on swine and cattle carcasses and the adequacy of alternative sampling approaches.

Samples may be analyzed in either the establishment's own laboratory or a commercial laboratory. Samples must be analyzed by a quantitative method of analysis for *E. coli.* The method must be approved by the Association of Official Analytic Chemists or validated by a scientific body in collaborative trials against the three tube most probable number (MPN) method and agreeing with the 95 percent upper and lower confidence limit of the appropriate MPN index.

FSIS has developed and is publishing as an appendix to the document guidelines that provide additional, detailed information on how best to sample, test, record, and interpret results for *E. coli* under this regulation. FSIS invites comment on these guidelines.

Recordkeeping

Results of each test must be recorded, in terms of colony forming units per milliliter (cfu/ml) for poultry carcasses or per square centimeter (cfu/$cm^2$) for livestock carcasses, on a process control chart or table that permits evaluation of the test results in relation to preceding tests in accordance with the applicable criteria. These records must be maintained at the establishment for 12 months and must be made available to Inspection Program employees on request. Inspectors will monitor results over time, to verify effective and consistent process control.

Use of E. Coli Test Results by Establishments

As discussed in preceding sections, establishments slaughtering livestock or poultry are required to use *E. coli* testing and evaluation of the results to verify the adequacy of their process controls for fecal contamination. Any test result in the marginal range (above m) indicates to the establishment that there is a potential problem in its processing control that may require attention. If the number of test results above m exceeds the specific number allowed, c (3, for all species), in the specific number of consecutive tests in the moving window, n (13 for all species), the establishment has failed to meet the performance criteria, and a significant question has been raised about the adequacy of the establishment's process controls for fecal contamination. Review of the process by the establishment and necessary corrective actions are strongly suggested.

Results above the upper value M are unacceptable and should trigger immediate establishment review of slaughter process controls to discover the cause of the failure and to prevent recurrence, and, if a product has been affected, to consider the status and proper disposition of the product as the circumstances dictate.

Use of E. coli Test Results by FSIS

FSIS personnel, like establishment personnel, will use the *E. coli* test results to help assess how well the establishment is controlling its slaughter and dressing processes. FSIS will compare establishment test results to the applicable *E. coli* performance criterion. A single failure to meet the criterion does not by itself demonstrate a lack of process control or product adulteration, but it will trigger greater inspection activity to establish that all applicable sanitation and process control requirements are being met and product is not being adulterated. Inspectors may make additional visual inspections of products and/or equipment and facilities, collect samples for FSIS laboratory analysis, and retain or condemn product, as appropriate. In addition, Sanitation

[9] Dorsa, W.J., C.N. Cutter, G.R. Siragusa. 1996. Evaluation of Six Sampling Methods for Recovery of Bacteria from Beef Carcass Surfaces. Letters in Applied Microbial. 22:39–41.

[10] Gill, C.O. J.C. McGinnis, M. Badoni. 1996. Assessment of the Hygienic Characteristics of a Beef Carcass Dressing Process. J. Food Protection 59(2):136–140.

SOP's and HACCP records will be reviewed, as appropriate. Failure to meet the criterion may also result in the establishment being selected for intensified Agency testing for *Salmonella* under the pathogen reduction performance standard sampling program; and, if the establishment produced ground beef, its product could be targeted in the *E. coli.* O157:H7 ground beef testing program.

The *E. coli* test results will be used by FSIS, along with all other relevant data and observations, including past establishment performance, to determine whether a slaughter establishment is meeting its process control responsibilities. Repeated failures to meet the criterion would lend support to a finding that the establishment's process controls are inadequate. Failure to maintain adequate process control will result in suspension and withdrawal of inspection, as appropriate. Such actions will be made in accordance with rules of practice that will be adopted for those proceedings.

After a slaughter establishment implements HACCP, the *E. coli* testing program will continue as a HACCP verification activity. Isolated or occasional failures to meet the *E. coli* performance criterion may indicate that establishment personnel need to take corrective actions spelled out in their HACCP plan. Repeated failures to meet the criterion will result in FSIS focusing its verification oversight on relevant CCP's, which could lead to the need for HACCP plan reassessment by the establishment, as well as other inspection and compliance related activities that may be appropriate, as discussed above.

Implementation Timetable

Six months from this publication date, establishments that slaughter livestock or poultry will be required to begin sampling and testing for *E. coli* at the volume-based rates described above. From that time, those establishments that do not test or fail to keep records of results as prescribed by the regulation will be subject to withdrawal of inspection in accord with the procedures set forth in 9 CFR 335.13 or 381.234. After another six months, i.e., 12 months after publication of this final rule, after establishments have had an opportunity to gain experience in conducting this testing, recording the results, and using the data to verify and improve process control, FSIS personnel will incorporate the review of establishment *E. coli* test results into its inspection routine.

In considering the timeframe for implementing the *E. coli* testing requirement, FSIS has taken into account the practicality of initiating such testing in a large number of establishments, the potential utility of the resulting data to establishments as they prepare for HACCP implementation, and the added consumer protection of having establishments, particularly those scheduled to implement HACCP towards the end of the implementation timetable, initiating testing and evaluating results against the process control performance criteria. FSIS is aware that many establishments, especially large ones, already use microbial testing as a means of verifying their process control systems; many may already be testing for generic *E. coli.* Some of those establishments may already have HACCP plans in place as well. Establishments performing microbiological testing and already working under HACCP plans have found that such testing is an important element in conducting a hazard analysis, validating HACCP plans, and verifying the ongoing effectiveness of HACCP systems.

For establishments that are not already performing microbiological testing and not operating under HACCP plans, the data will be valuable in revealing how well or poorly their slaughter process is performing in microbiological terms, when compared against the microbial characteristics of a large portion of national production, and will provide an indication of whether immediate actions are required to prevent product adulteration and protect food safety. In addition, such data, when accumulated over a period of time, will contribute to the conduct of hazard analyses and selection of process control measures. Collection of these data will provide benchmarks for each establishment as it begins to understand the food safety implications of its processes and how to improve them.

In the meantime, FSIS personnel, using the performance criteria as benchmarks for overall industry performance in terms of the number of *E. coli* organisms found on carcasses at a specific point in the slaughter process, will be able to review establishment data and other evidence to determine if each establishment is achieving an acceptable level of performance.

Request for Comments

The Agency is soliciting additional comment and information on a number of technical issues concerning the protocols for *E. coli* testing, and on that basis will consider adjusting those protocols prior to the effective date. In particular, two concerns have been raised on the issue of the rule's statistical framework: 1) the representativeness of the proposed sample collection, and 2) the levels and distribution of *E. coli* on carcasses and the ways in which these levels affect the utility of the proposed testing protocol.

Because poultry slaughter establishments must collect samples with a whole bird rinse, the representativeness of the sampling site is not an issue; the entire bird is being sampled. FSIS used this technique when collecting baseline data and therefore, establishment data should be comparable to baseline survey data. Further, greater than 99 percent of broiler carcasses in the national baseline survey had detectable *E. coli.* Generic *E. coli* testing data therefore clearly will be useful to poultry slaughter establishments as they initiate HACCP and begin to verify the associated process control procedures. *E. coli* testing procedures for poultry required by this rule comport well with the available scientific data and discussions held as part of the public comment process.

More difficult issues arose in developing *E. coli* sampling procedures for cattle and swine carcasses. Part of the concern, as discussed, stems from the fact that a whole carcass rinse is impossible with a large carcass, and thus it is necessary to select specific sampling sites. Selections of sites, in turn, may influence results, particularly if generic *E. coli* is not randomly distributed on the carcass. Site selection may also influence the usefulness of resultant data. For example, the appropriate response to an elevated generic *E. coli* level on the rump of a beef carcass may be different from the appropriate response to an elevated generic *E. coli* level at the site of the midline incision. The Agency wants comments on the relative merits of a one-site versus three-site sampling approach.

Another concern revolves around the correlation between non-destructive and destructive sampling. The baseline surveys used destructive sampling, that is, culturing of tissue excised from the carcass. FSIS agrees with commenters that reasonable results can be obtained with a non-destructive swabbing technique for sampling. Preliminary data indicate that results obtained with a destructive and non-destructive sampling are comparable, although studies continue.

Another concern arises from the statistical basis for *E. coli* testing. In

particular, the levels of generic *E. coli* on cattle carcasses in the national baseline survey were low, with the majority of carcasses having no detectable *E. coli*. This could raise questions about the utility of the *E. coli* test results in evaluating process controls in establishments slaughtering cattle.

The principal utility of process control testing stems from the availability to a establishment of results over time from that establishment. The tracking of trends and identification of anomalous results permits isolation and correction of problem areas that might otherwise go unnoticed. FSIS has concluded that testing for generic *E. coli* is the appropriate and necessary means by which meat and poultry slaughter establishments must evaluate and verify the adequacy of their process controls. FSIS considers systematic measures to prevent and remove fecal contamination and associated bacteria, coupled with microbial testing to verify effectiveness, to be the state of the art in slaughter establishment sanitation. Microbial testing for bacteria that are good indicators of fecal contamination and the regular availability of test results will help to focus establishments on the effectiveness of their measures for preventing and removing fecal contamination and will provide information establishments can use in maintaining adequate process control. FSIS reached this conclusion upon its review of written comments received on the proposal and comments made at the scientific conferences and public meetings, as well as available scientific data, and has retabulated and reassessed its baseline data as it applies to the *E. coli* testing in the rule.

In the first reassessment, it was determined that the lower levels and more frequent negative test results of *E. coli* found on livestock, particularly steers and heifers, as compared to poultry in the baseline survey data does not undercut the utility of the *E. coli* criteria which are also based on the baseline survey data. FSIS tested the performance criteria in this rule by applying it to plant-specific test results obtained during the baseline surveys. FSIS looked at data from establishments for which at least 20 test results were available, and listed the results by collection date much as would be done by the establishments under the rule. The Agency found that about half of the establishments in each of the livestock slaughter categories fully met the criteria, which suggests that those establishments have good process controls for prevention of fecal contamination. The Agency also found that many establishments failed to meet the applicable *E. coli* criterion (any result above M, or more than 3 results above m out of the most recent 13 test results): 2 out of 30 steer/heifer establishments, 10 out of 34 cow/bull establishments, and 11 out of 31 market hog establishments failed to meet the criterion at least 20% of the time, suggesting that a significant number of livestock slaughter establishments should review and make adjustments to their process controls.

The Agency also made an assessment of whether the baselines show true differences in *E. coli* results among establishments that slaughter the same categories of livestock. The Agency did a statistical analysis of a hypothesis: percents positive are equal among establishments slaughtering the same category of livestock. The analysis involved comparing *E. coli* test results of pairs of establishments. This comparison showed wide ranges in the percents positive between establishments albeit smaller differences among steer/heifer establishments. The percents positive ranged between 0.0 to 27.1 for steer/heifer establishments, 0.0 to 45.2 for cow/bull establishments, and 2.2 to 97.1 for market hog establishments. The hypothesis, therefore, was rejected because the data showed significant differences in the prevalence of *E. coli* on carcasses of animals found in establishments slaughtering the same categories of livestock.

The retabulated data developed for these two analyses are available for viewing in the FSIS Docket Room (See **ADDRESSES**) as part of the administrative record of this rulemaking.

FSIS invites comments on the statistical frameworks it has used for *E. coli* testing and performance criteria. The Agency is open to the possibility that it might further improve its testing protocols prior to the implementation date, and is seeking additional relevant scientific and economic data. In particular, in light of the concerns noted above, FSIS is seeking additional data relating to the distribution of generic *E. coli* on cattle and swine carcasses, differences in *E. coli* levels within and between establishments, and the appropriateness of various data sets for establishing the proposed 80th and 98th percentile national criteria for generic *E. coli* levels on cattle and swine carcasses.

FSIS also requests comments and information addressing the following questions:

Are there alternative, equally or more effective risk based microbial sampling protocols that could be used for process control verification by establishments that slaughter cattle or swine?

Are there more appropriate anatomical sites for microbial testing than those adopted?

Are there alternative sampling frequencies that would elicit results more indicative of process control performance?

How could the proposed testing protocol be revised to better account for differing establishment characteristics and how can FSIS minimize the cost to establishments of *E. coli* testing without sacrificing testing effectiveness?

Are there worker safety concerns regarding sampling from difficult to reach carcass sites and, if so, how might they be mitigated?

Given that testing is based on production volume, are there effective approaches other than requiring very small establishments to conduct a minimal amount of testing during certain months of the year?

FSIS is aware that some individuals, companies, and trade groups have conducted research and have data on the various carcass sampling sites and associated levels of bacteria at these sites (carcass mapping). FSIS welcomes any information concerning *E. coli* and other microorganisms at various sites on carcasses.

FSIS has opted to establish performance criteria based on the levels and distribution of *E. coli* for the various slaughter classes. Some individuals and companies may have established their own criteria for process control verification. FSIS welcomes information on the rationales, sampling plans and protocols on which any such criteria are based, as well as data (or data summaries) collected under such protocols.

FSIS welcomes any new or unpublished research results or information that exists concerning the relationship between the presence of generic *E. coli* and the presence of other pathogenic microorganisms on cattle and swine carcasses.

FSIS specifically invites establishments currently conducting generic *E. coli* testing for process control verification to submit data regarding their costs, including labor and training costs, as well as testing costs per unit. FSIS will use this data to assess the merits of alternative testing protocols.

FSIS invites comments on how, and the extent to which, it should summarize and make available to the industry and public *E. coli* testing data made available to it under these regulations. Reports on the collective experiences of establishments with various characteristics could be useful to the industry, the Agency, and the public at large.

In light of these issues, in particular those reflecting continuing concerns

about the applicability of the national criteria to all affected establishments, the frequency and other parts of the testing protocols, and the statistical utility of the establishment's test results as a measure of process control, FSIS plans to conduct two public conferences. The first conference is planned to be held approximately 45 days into the 60 day comment period following publication of this rule. This public conference will be led by a panel of scientists from FSIS and other government agencies who will listen to testimony and review comments received on these technical issues and share their observations and opinions. FSIS will consider their input along with all comments received as the basis for any necessary technical amendments, which will be completed at least 30 days before the implementation date. The second public conference is tentatively planned for approximately 9 months following publication of this final rule. This conference would be an opportunity for the industry and others to discuss with FSIS new information based on about 3 months of testing experience that may bear on these same issues and might allow for further adjustments of protocols before FSIS inspectors are tasked, about three months later, with comparing test results to the national criteria as part of their inspection routine. FSIS will publish further, more detailed notice of these conferences in future issues of the Federal Register.

Pathogen Reduction Performance Standards

The pathogen reduction performance standards for *Salmonella* FSIS is establishing in this final rule complement the process control performance criteria for fecal contamination and *E. coli* testing.

The likelihood of product contamination by *Salmonella* is affected by factors in addition to the incidence or degree of fecal contamination, including the condition of incoming animals and cross contamination among carcasses during the slaughter process and further processing. Under HACCP, establishments will be expected to establish controls wherever practicable to address and reduce the risk of contamination with harmful bacteria. The pathogen reduction performance standards FSIS is establishing for *Salmonella* are an important step toward enabling FSIS and the establishment to verify the aggregate effectiveness of an establishment's HACCP controls in reducing harmful bacteria.

Rationale for Selecting Salmonella

In the future, FSIS may develop pathogen reduction performance standards targeting a number of pathogens. Initially, however, FSIS has developed pathogen reduction performance standards only for one—*Salmonella. Salmonella* is an enteric pathogen, which as a group cause most preventable illnesses associated with meat and poultry.

FSIS has selected *Salmonella* because: (1) it is the most common bacterial cause of foodborne illness; (2) FSIS baseline data show that *Salmonella* colonizes a variety of mammals and birds, and occurs at frequencies which permit changes to be detected and monitored; (3) current methodologies can recover *Salmonella* from a variety of meat and poultry products; and (4) intervention strategies aimed at reducing fecal contamination and other sources of *Salmonella* on raw product should be effective against other pathogens.

Basis for Performance Standards and Plans for Future Adjustments

The pathogen reduction performance standards for *Salmonella* are based on the current prevalence of *Salmonella*, as determined from FSIS's baseline surveys. Current prevalence percentages based on the data from these surveys are listed in Table 4 and in the regulations (new §§ 310.25(c)(3)(ii) and 381.94(c)(3)(ii)) under the column headed ''Performance Standard.'' This is the performance standard that establishments must achieve, not on a lot-by-lot basis, but consistently over a period of time through appropriate and well-executed process control.

This is the same approach to setting the ''interim targets for pathogen reduction'' that FSIS proposed in its Pathogen Reduction/HACCP proposal. As explained in the preamble to that proposal, basing the performance standard on the national baseline prevalence means that some establishments are already meeting or exceeding the standard, while other establishments are not. FSIS believes that it is feasible for all establishments to meet or exceed the current baseline prevalence of contamination with *Salmonella,* through careful process control to prevent contamination and incorporation of readily available food safety technologies and procedures to remove contamination. The feasibility of achieving this standard is demonstrated by the fact that many establishments are already doing so.

The Agency believes that most establishments maintaining sanitary conditions under their Sanitation SOP's and operating under validated HACCP plans, as provided for elsewhere in this regulation, will be able to meet the pathogen reduction performance standards without major new costs. For example, HACCP plans for slaughter establishments are expected to address the condition of incoming animals, and may provide for more systematic control of relevant processes or interventions, such as the cleaning of animals or carcasses before evisceration. HACCP systems should, therefore, result in many establishments improving the microbial profile of their finished raw products.

Slaughter establishments concerned that they might not meet the pathogen reduction performance standard have available a wide range of technologies shown to reduce the levels of pathogens that may be on the surface of carcasses. As discussed in some detail in the proposed rule, antimicrobial treatments normally include washes or sprays that use either hot water or a solution of water and a substance approved by FSIS for that use. Such substances include acids (lactic, acetic, and citric), trisodium phosphate (TSP), and chlorine. In addition, FSIS has recently established that spray-vacuum devices that apply pressurized steam or hot water to beef carcasses and immediately vacuum it up also are effective in reducing bacteria on carcasses.

Establishments producing raw ground product from raw meat or poultry supplied by other establishments cannot use technologies for reducing pathogens that are designed for use on the surfaces of whole carcasses at the time of slaughter. Such establishments may require more control over incoming raw product, including contractual specifications to ensure that they begin their process with product that meets the standard, as well as careful adherence to their Sanitation SOP's and HACCP plan.

By basing its *Salmonella* performance standards on the current national baseline prevalence for each major species and product class, FSIS is applying a uniform policy principle: all establishments must achieve at least the current baseline level of performance with respect to *Salmonella* for the product classes they produce. This policy is based on the public health judgment that reducing the percentage of carcasses with *Salmonella* will reduce the risk of foodborne illness, and on the regulatory policy judgment that establishing for the first time a clear standard for Salmonella, in conjunction with the implementation of HACCP, will lead to significant reductions in

contamination rates. This policy is not based on a quantitative assessment of the risk posed by any particular incidence of *Salmonella* contamination or the determination of a ''safe'' incidence or level. There is not currently a scientific basis for making such assessments or determinations.

FSIS recognizes that this approach results in a range of performance standards among the various product classes (see Table 4). For example, the current *Salmonella* prevalence for broilers is 20 percent, while the current prevalence for steers and heifers is 1 percent. This range reflects the current level of performance for each class of product, as reflected in the FSIS baseline surveys.

FSIS intends to revise its *Salmonella* performance standards periodically as new baseline prevalence data become available and in furtherance of the Agency's goal of reducing the risk of foodborne illness. FSIS will periodically repeat its baseline studies to assess the overall progress of the pathogen reduction effort. Also, as indicated below in the discussion of the FSIS testing strategy, FSIS will be conducting extensive *Salmonella* testing to ensure compliance with the pathogen reduction performance standards. If the data from this testing or future baseline surveys justify revision of the performance standards, FSIS will promptly publish such revisions for public comment in the Federal Register. FSIS anticipates revision of these performance standards downward as justified by progress in pathogen reduction and demonstrated reductions in the national baseline prevalence of *Salmonella.* In making such adjustments, FSIS will take into account the state of scientific knowledge, available technology, feasibility, and public health benefits to be achieved. FSIS will also consider the current level of industry performance with respect to *Salmonella* prevalence in particular classes of livestock and poultry. It is anticipated that such adjustments would more likely occur in classes with the highest prevalence. FSIS originally proposed to call these performance ''interim'' standards or targets. The final rule removes that language.

Approximately 15 months after the publication of this final rule, FSIS will convene a public conference to review available *Salmonella* data and discuss whether they warrant refining the *Salmonella* performance standards. Prior to the conference, FSIS will make available the data resulting from the pre-implementation phase of the FSIS *Salmonella* testing program. FSIS also will take advantage of this conference to receive public input on the *E. coli* testing program. FSIS will extend an invitation to all interested parties.

Additionally, FSIS intends to work closely with other Federal agencies and the scientific community to improve the scientific basis for establishing food safety performance standards for microbial pathogens. In particular, the Executive Office of the President, Office of Science and Technology Policy, will oversee a task force to determine what research and data collection are needed to develop a workable approach to quantitative risk assessment for foodborne pathogens and determine the most cost-effective way of conducting the necessary research. FSIS and other USDA agencies will participate in this government-wide task force.

Determining Compliance With the Standard

The pathogen reduction performance standards specify for each species and category of raw product a maximum number of positive test results (c) permitted to be found in a specified number of samples (n) for each class of raw product before the establishment will be deemed to be exceeding the performance standard. The standards were determined by first calculating for each category of product tested in the FSIS national baseline programs and surveys the percentage of *Salmonella* positives nationwide. This is, in effect, the performance standard that must be achieved consistently by each establishment over time. Then the number of samples to test (n) and the number of positives to allow from among those samples (c) were calculated to provide approximately an 80% probability of passing when the establishment is operating at the national baseline prevalence of *Salmonella* positive results, i.e., just within the performance standard. As discussed in the preamble to the Pathogen Reduction/HACCP proposal and above with respect to *E. coli* testing, the statistical criteria for evaluating *Salmonella* test results balance the need to prevent establishments from failing to meet the standard, based on chance results, and the need to ensure both that violations are readily detected and that establishments have an incentive to improve their performance beyond what is minimally required by the standard. The resulting values for the pathogen reduction performance standards are shown in Table 4.

TABLE 4.—PATHOGEN REDUCTION PERFORMANCE STANDARDS

| Class of product | Performance standard (percent positive for *Salmonella*) (%) | Number of samples tested (n) | Maximum number of positives to achieve standard (c) |
|---|---|---|---|
| Steers/Heifers | 1.0 | 82 | 1 |
| Cows/Bulls | 2.7 | 58 | 2 |
| Ground Beef | 7.5 | 53 | 5 |
| Fresh Pork Sausage | *NA | *NA | *NA |
| Broilers | 20.0 | 51 | 12 |
| Hogs | 8.7 | 55 | 6 |
| Ground Turkey | 49.9 | 53 | 29 |
| Ground Chicken | 44.6 | 53 | 26 |
| Turkeys | *NA | *NA | *NA |

* Not available at this time.

FSIS has concluded that, for purposes of this rulemaking, it should rely only on FSIS baseline data for determinations of the prevalence of bacteria on which it is establishing standards. The proposal discussed the possibility of relying on other data sources, such as industry surveys or other reports in the scientific literature. No such data were

submitted to FSIS in response to the proposal, and FSIS has concluded that those alternative data sources are not likely to provide the nationwide, objective data that are needed for the Agency's regulatory purpose of establishing performance standards. FSIS will consider modifications of the scope and approach to these surveys and additional data sources, as the needs of public health dictate, but will continue to rely only on data that are gathered with appropriate scientific rigor.

FSIS has completed its baseline survey work and has issued reports on its findings for Steers/Heifers, Cows/Bulls, Broiler Chickens, Market Hogs, Ground Beef, Ground Chicken, and Ground Turkey. Copies of these reports are available for inspection in the FSIS Docket Room (see **ADDRESSES**).

FSIS is currently conducting the fresh pork sausage survey and will begin the Baseline Program for turkeys soon. Therefore, performance standards for fresh pork sausage and turkeys cannot be established at this time. The performance standards for these two classes of products will be published for public comment once FSIS's reports on the data are available.

FSIS will determine an establishment's compliance with the applicable pathogen reduction performance standard by taking the indicated number of samples, generally at the rate of one or more per day, testing each sample for *Salmonella,* and determining whether the number of positive results is above the maximum permitted for that product in the regulation.

FSIS has established performance standards for *Salmonella* on carcasses and on raw products derived from meat and poultry. Because *Salmonella* is more likely to be present on raw, ground, or comminuted products than on the carcasses from which they are derived, raw, ground, or comminuted product ordinarily will be the focus of FSIS compliance testing in those establishments that both slaughter and produce raw ground product.

The pathogen reduction performance standard applies to establishments, not to individual products. As discussed, microbiological testing of raw products for purposes of routinely separating adulterated from unadulterated products is impractical at this time. The pathogen reduction standard for *Salmonella* requires testing of products not for purposes of determining product disposition (although in some circumstances it may contribute to additional inspection or compliance activities that do), but rather as a measure of the effectiveness of the process in limiting contamination with this particular pathogen. If an establishment fails to meet the standard, it must institute corrective actions to lower the incidence of *Salmonella* on all such product it produces as measured by subsequent testing, or, ultimately, it must cease producing that product. The FSIS enforcement strategy is further discussed below.

FSIS Testing Strategy

FSIS's *Salmonella* testing program will be implemented in two phases, a pre-implementation phase and a compliance phase. The pre-implementation phase will begin approximately three months after publication of the final rule and initially will consist of an establishment-by-establishment survey of the slaughter establishments represented in the National Microbiological Baseline Data Collection Programs. These establishments account for approximately 99 percent of the total production volume for each of the major species slaughtered nationwide. The testing in each slaughter establishment will be conducted in a manner designed to provide a reliable picture of the establishment's performance throughout a 12-month period, in relation to the pathogen performance standard applicable to the species being slaughtered. It is anticipated that initially FSIS will take approximately 250 samples per establishment over a one-year period, with testing to be completed before the implementation date for the standard in each establishment.

FSIS will also conduct pre-implementation testing in ground product establishments and in establishments that account for the remaining one percent of production and that were not included in the FSIS baseline surveys. This testing will be conducted in a manner and at a level that takes into account the size and nature of the establishments involved. FSIS will provide more detail on this testing soon in a separate notice.

This pre-implementation testing will inform both the establishments and FSIS, prior to the actual enforcement of the performance standards, whether each establishment is already meeting the standard, is close to meeting the standard, or requires substantial improvement to meet the standard. As with all FSIS testing done to check compliance with the pathogen reduction standards, the testing results will be provided to the establishment by FSIS. These testing results will assist establishments in designing and validating their HACCP plans as needed to ensure that products meet pathogen reduction performance standards. This information also will assist FSIS to more effectively target its compliance testing after the standards go into effect, as discussed below. This FSIS-generated data on the prevalence of *Salmonella* on inspected products will be available to the public.

Upon the implementation of HACCP, and upon publication of Federal Register documents concerning the pathogen reduction performance standards for which baseline survey reports have not yet been published, FSIS will initiate phase 2, the compliance phase, of its *Salmonella* testing program in affected establishments. As an integral part of its overall responsibility for food safety, FSIS will conduct an ongoing testing program to determine compliance with the *Salmonella* performance standard for all classes of livestock and poultry. In addition, FSIS will conduct a program of targeted testing where warranted. The frequency and intensity of this testing will be determined based on past establishment performance, the establishment's own generic *E. coli* test results, FSIS inspectional observations, reports of illness associated with product produced at an establishment, the results of *Salmonella* testing during the pre-implementation phase, previous failures to meet the performance standards, and other factors.

The costs to FSIS of this testing for *Salmonella,* estimated to be approximately 2 million dollars annually, are addressed in the Final Regulatory Impact Analysis of this rule.

FSIS Testing Methods

Details of the sample collection and testing procedures the Agency will be using are in Appendix E, ''FSIS Sample Collection Guidelines and Procedure for Isolation and Identification of *Salmonella* from Raw Meat and Poultry Products.''

*FSIS Enforcement Strategy*

The objective of FSIS's enforcement policy with respect to microbial testing is to achieve compliance with the regulations. With respect to *Salmonella,* the Agency's goal is to achieve pathogen reduction by ensuring that all slaughter and ground product establishments meet the performance standards established by FSIS. FSIS intends to achieve this goal through an enforcement strategy based on the two-part testing program mentioned above: the ongoing testing, which will include all establishments at some fixed interval, irrespective of performance;

and targeted testing focusing on establishments unable to meet the *Salmonella* performance standard when tested by FSIS or for the other reasons discussed above.

The *Salmonella* enforcement strategy will embody an objective, uniform systems approach to ensure that it is administered and applied in a fair, equitable, and common-sense manner. The Agency will carefully monitor and adjust its enforcement program on an ongoing basis to ensure that its enforcement activities reflect these principles while ensuring food safety.

If ongoing or targeted testing in an establishment indicates the performance standard is not being met, FSIS will decide whether to conduct follow-up testing on the basis of several factors. If an establishment with *Salmonella* test results marginally above the limit takes corrective action, FSIS could judge, based on the establishment's actions and other factors relevant to ensuring food safety, that immediate follow-up testing is not necessary. If, however, that establishment were to take inadequate corrective action after failing to meet the *Salmonella* performance standard, or if it simply ignored that failure, FSIS will conduct a second series of tests. FSIS will invariably conduct further testing at all establishments whose test results significantly exceed the standard.

If an establishment fails the second, targeted series of FSIS-conducted tests, the establishment will be required to reassess its HACCP plan for the tested product, modifying the plan as necessary to achieve the *Salmonella* performance standard. If the establishment fails to modify its HACCP plan as necessary, or if it fails the third series of targeted tests, FSIS will suspend inspection services. The suspension will remain in effect until the establishment demonstrates its ability to meet the performance standard.

The probability of an establishment failing the Agency's pathogen reduction standard three consecutive times is less than 1% when the establishment prevalence is at the limit of the standard.

Implementation Timetable for Pathogen Reduction Performance Standards

Slaughter establishments and establishments producing raw, ground, and comminuted product subject to these pathogen reduction performance standards must meet the *Salmonella* standard at the time the establishment is required to implement HACCP. As explained in section II above, HACCP implementation will be phased in based on establishment size over a period of 18 to 42 months following the date of publication of this final rule. FSIS originally proposed a single two-year delayed effective date for its *Salmonella* performance standards. Many commenters argued that it was not reasonable to hold all establishments to the same effective date, and, furthermore, that it was more logical to hold establishments to compliance with the standard after, rather than before, HACCP was in place. This proposition also was strongly endorsed by many people who attended an information briefing and public meeting held by FSIS in Kansas City, Missouri, on May 22, 1995, expressly for small meat and poultry establishments and small businesses (60 FR 25869, May 15, 1995). They questioned, among other things, the need for and wisdom of a common implementation date for large and small establishments.

Harmonizing the effective dates with implementation of HACCP is more consistent with the nature of the pathogen reduction standards as measures of what establishments can and should achieve through HACCP-based process control. It will bring 74% of the nation's slaughter production of meat and poultry (by weight) under the performance standard 18 months following publication of this final rule. It will also facilitate the transition to HACCP, for both the FSIS workforce and affected establishments, by requiring all establishments to meet the performance standards as they implement HACCP.

Response to Comments

FSIS proposed to require that all meat and poultry slaughtering establishments and establishments producing raw ground product conduct daily microbial testing to determine compliance with interim targets for the reduction of *Salmonella.* FSIS proposed to require a single qualitative test per day, with daily results to be accumulated over time to provide information regarding the performance of an establishment's process and to collect data sufficient for process control verification. Daily testing was considered the minimal sampling necessary to detect process deviations within a realistic time frame.

The three issues most commonly raised by commenters concerning the proposed microbial testing requirements were the proposed selection of *Salmonella* as the indicator organism, the frequency of proposed testing, and the disproportionate costs to small establishments. Some commenters also argued that the regulatory approach was not justified and exceeded FSIS's legal authority.

The Indicator Organism

Many commenters opposed the use of *Salmonella* as the indicator organism, arguing that its low incidence in beef makes it a poor indicator of pathogen reduction in the species, the positive/negative test result is a weak measure of process control, and, compared to some nonpathogenic alternatives such as generic *E. coli, Salmonella* tests are more difficult, time-consuming, and costly. Others commented that testing for *Salmonella* alone is unacceptable, as there is no direct correlation between the presence of this organism and other pathogens such as *E. coli* O157:H7, *Listeria,* and *Campylobacter.*

Various alternative indicator organisms were suggested, including generic *E. coli* (biotype I), total plate counts, Enterobacteriaceae, Total Viable Counts (TVC), and Aerobic Plate Counts (APC). Commenters who recommended alternatives stated that tests for these organisms would be better indicators for process control and fecal contamination levels than tests for *Salmonella.* Still others requested that more studies be conducted to determine which type of indicator organism would be most useful for verifying process control.

Some commenters recommended retaining *Salmonella* as the target for pathogen reduction, but suggested adding a requirement for generic *E. coli* testing because it serves effectively as an indicator of fecal contamination in all species. A minority of commenters supported the proposed use of *Salmonella* as the indicator organism because of its significance as a cause of foodborne illness and because there are relatively simple tests available for detecting *Salmonella.* Some commenters recommended requiring testing for *Salmonella* and additional pathogens in selected species or products based on the degree of public health risk posed by the pathogen. A number of consumer groups requested a pathogen goal of zero for *E. coli* O157:H7.

These comments are generally addressed by the FSIS decisions to require slaughter establishments to test for generic *E. coli* as a means to verify process control for fecal contamination, and to have FSIS conduct testing for *Salmonella* for pathogen reduction.

FSIS considers systematic measures to prevent and remove fecal contamination and associated bacteria, coupled with microbial testing to verify effectiveness, to be the state of the art in slaughter establishment sanitation. Further, FSIS believes that testing for generic *E. coli* is the appropriate and necessary means by which meat and poultry slaughter

establishments must verify their process controls. FSIS reviewed written comments received on the original proposal and comments made at the scientific conferences and public meetings, as well as available scientific data, and has decided to require slaughter establishments to conduct testing for generic *E. coli* to verify process controls.

The Agency has concluded that each kind of testing serves an important function. Both play a major part in the Agency's pathogen reduction efforts, and working in unison will permit the Agency to use its inspection resources more effectively, and efficiently, thereby enhancing inspection.

*E. coli* testing for process control verification and *Salmonella* testing to enforce the pathogen reduction performance standard both are aimed at FSIS's objective to reduce the incidence of disease caused by foodborne pathogens. However, *E. coli* testing and *Salmonella* testing aim at the objective from different directions.

An ongoing screen for generic *E. coli* serves both the establishment and FSIS as a means of verifying that a slaughter facility's process is ''in control'' with regard to prevention of fecal contamination of the carcasses being produced. In other words, it becomes a marker for verifying a slaughter establishment's adherence to the zero tolerance for fecal contamination. Such testing provides a standard measure for verification of process control at the critical slaughter stage of production. Without such a standard measure, there is no objective basis upon which either the establishment or FSIS can determine the adequacy of process controls, from one establishment to another, in preventing fecal contamination. It will permit establishments to make ongoing adjustments or changes to their slaughter process when necessary to meet the performance criteria. The test results will also guide FSIS's ongoing inspection, permitting adjustments in intensity and focus as appropriate.

Generic *E. coli* testing to verify process control alone, however, does not adequately address legitimate public health concerns about pathogenic bacteria in and on raw product. *E. coli* (except for certain pathogenic subgroups) is not itself a cause of foodborne disease. It is a ''surrogate marker'' or ''indicator'' for fecal contamination, which in turn is a source of many pathogens that may contaminate products. Fecal contamination, however, does not always correlate with the presence of pathogens; high levels of *E. coli* may be present without pathogens, and pathogens may be present without high *E. coli* levels. Because testing for *E. coli* cannot serve as a surrogate for the presence of *Salmonella*, FSIS's specific public health objective of reducing nationwide *Salmonella* levels on raw meat and poultry products, including raw ground products, requires a standard and a testing regime that are directed at that pathogen.

The pathogen reduction performance standard for *Salmonella* must be met by all inspected establishments producing raw meat and poultry products. Agency testing for *Salmonella* is necessary for enforcement of that requirement. Slaughter establishments' *E. coli* testing, a means for verifying process control for fecal contamination, should promote improved process controls which should, in turn, result in reductions of *Salmonella* and other pathogens. But, *E. coli* testing cannot measure actual reductions and control of *Salmonella* nor be the basis for Agency enforcement of the pathogen reduction standards.

The test results from both kinds of testing are valuable to the Agency in the shift to a HACCP-based regulatory regime, but their value comes from the way they work together to verify the effectiveness of an overall system of preventive process control. The Agency continues to believe that pathogen reduction in inspected establishments requires that establishments build into their operations preventive measures and systems to reduce the potential for pathogens to be on products to begin with, and that such systems must be establishment-produced and establishment-specific. The Agency's HACCP and Sanitation SOP's regulations are intended to do that. However, these regulations are not self-enforcing. The Agency's inspection mandate does not permit it to simply assume that an establishment's systems are in fact producing uniformly safe and unadulterated products. Pathogen reduction will be achieved instead by the combination of HACCP plans validated as effective for pathogens of concern, *E. coli* testing by the establishment to provide on-going verification of process control for fecal contamination, and *Salmonella* testing by FSIS to enforce compliance with the pathogen reduction performance standards.

Frequency and Cost of Testing

Many commenters questioned the proposed frequency of daily testing for each species and for raw, ground products. The majority of commenters who opposed daily testing stated that this testing requirement would place an unfair cost burden and have a negative economic impact on some establishments, especially small volume establishments and establishments producing multiple species and multiple ground products that would require multiple tests. These commenters stated that under the proposed sampling methodology, a small establishment could conceivably conduct more tests per day than a very large establishment with a much higher production volume. Also mentioned was the fact that many of these establishments do not have on-site testing facilities and would have an additional cost of shipping samples for testing.

To minimize the economic impact on establishments, especially small establishments, some commenters suggested that FSIS should pay for microbial testing. Others recommended less than daily testing or other changes to the proposed sampling frequency. Various alternatives to the proposed sampling protocol were mentioned, but the sampling scheme recommended most often as the most equitable, and the one FSIS is requiring, is one based on production volume.

Although many commenters requested less frequent testing than that proposed, others supported the one sample per day testing requirement as an efficient means of verifying process control. Still others recommended testing even more frequently than once per day. These commenters asserted that testing once a day is inadequate to verify process control or to screen out product with pathogens. Their main concern was that the proposed sampling frequency and moving sum statistical procedure would allow inadequate process control to go undetected, resulting in large quantities of suspect product being produced; recommendations were made for a testing frequency more proportional to an establishment's production volume.

Some commenters requested that exemptions from the proposed daily microbial testing be made for small establishments and establishments that have consistently complied with their HACCP programs. Others requested exemptions for specific products including: raw ground meat products; cured products; thermally processed canned foods; frozen foods; boxed meat and beef and pork carcasses from other inspected establishments; minor species (i.e., sheep, lamb, goats, equines, guineas); and raw ground products to be further processed as fully cooked, ready-to-eat items, while others stated that exemptions for these items would be inappropriate.

FSIS has modified the proposal in response to these comments. As explained above, FSIS is requiring *E. coli* testing in slaughter establishments where the initial and primary opportunity for fecal contamination occurs. FSIS is not requiring *E. coli* testing of processed products. A more limited testing requirement is possible because oversight of slaughter establishment verification testing for *E. coli* is not the sole means relied upon by FSIS to detect or prevent lack of process control. It is only one of many aspects of establishment operations FSIS will inspect in assessing the adequacy of an establishment's process controls. In particular, FSIS will increasingly rely on its verification that HACCP systems are working as intended. HACCP principles require establishments to identify CCP's, monitor them to see that they are in control, and take appropriate corrective action when monitoring detects a deviation. This is where control must be exercised by the establishment and where any lack of control will be detected in a establishment operating under a validated HACCP system.

FSIS has reconsidered the proposed requirement of daily testing in all slaughter establishments, in part because of the unnecessary and disproportionate economic impact that would occur for some small establishments. Instead, FSIS is requiring slaughter establishments to test carcasses for generic *E. coli* at frequencies corresponding to production volume. In addition, slaughter establishments will have 6 months, not just 3 months as proposed, after publication of the final rule to begin testing carcasses for generic *E. coli*. Further, very low volume establishments may not need to do more than one set of 13 *E. coli* tests annually, and such establishments slaughtering more than one species need not test both. These changes will significantly reduce the cost impact of mandatory testing for small establishments, while providing adequate and useful information to verify process control.

In addition to requiring testing for generic *E. coli* by slaughter establishments at a frequency relative to the establishment's production volume, *Salmonella* testing will be conducted by FSIS.

''Minor species,'' such as sheep, goats, equines, ducks, geese, and guineas, are not being addressed at this time because the Agency is addressing first the most commonly consumed foods under its jurisdiction. FSIS intends to address how best to gather data on and develop testing requirements and performance criteria and standards for these other food animals at a future date.

Legal Authority for Testing Requirement

Several commenters have questioned FSIS's legal authority for the proposed microbiological testing program. These comments are still relevant despite the differences between the proposed and final rules for microbiological testing.

The major change in the final rule is that FSIS is not adopting the proposed *Salmonella* testing regimen. As proposed, results of a series of establishment-conducted *Salmonella* tests would have been used to accomplish two goals: to verify process control and to enforce the prevalence targets for pathogens in raw products. Instead, FSIS is promulgating separate provisions to address these two regulatory goals. The first provision requires that slaughter establishments test carcasses for *E. coli* so that the effectiveness of the establishment's sanitation and process control measures can be assessed in an objective, uniform manner. The second provision sets a pathogen reduction performance standard to bring about reductions in the prevalence of *Salmonella* on raw meat and poultry products. This standard will be enforced by an FSIS-conducted testing program, and will require establishments with prevalence of *Salmonella* above the standard to change their operations to meet that standard. Failure by an establishment to achieve the standard could result in Agency sanctions, as discussed above. This standard will also encourage innovation to reduce pathogens throughout the industry.

One commenter argues that, because this regulatory strategy is precedent-setting, FSIS has a greater than usual burden of articulating the legal basis for it. This commenter notes that the testing regulation does not rely on a finding that the presence of the targeted organisms causes specific lots of product to become adulterated, as is the case with *E. coli* O157:H7 in ground beef. This commenter then argues that FSIS is relying upon a vague ''sanitation theory'' as its legal basis, and that the Agency has a greater duty to articulate its legal basis when new regulations impose new kinds of costs, like mandatory *E. coli* testing, or when the Agency is establishing a new regulatory policy.

This commenter believes that FSIS reliance on a ''sanitation theory'' is legally flawed because, if the Agency is unable to tell establishments how to correct a failure to meet the established targets, it cannot legally require microorganism testing, or impose sanctions for failure to meet established standards.

FSIS has ample statutory authority under the FMIA and PPIA to promulgate these microbiological testing provisions. The meat and poultry inspection statutes mandate Federal regulatory oversight of unusual intensity and comprehensiveness, and they provide the Secretary broad rulemaking authorities to implement them. The primary goal of the statutes is to prevent adulterated or misbranded meat and poultry products from entering into commerce by inspecting meat and poultry products and the establishments that produce them before the products are introduced into commerce. Such inspections are supplemented by compliance actions to remove adulterated or misbranded products from commerce and to apply appropriate sanctions against violators of the law. FSIS regulations under the FMIA and PPIA may be divided into two categories: (1) regulations prescribing the conditions under which, and the manner in which, mandatory inspections are conducted; and (2) regulations directed more broadly at preventing adulteration or misbranding of products, preparation of products in violation of the law, and sale of such products in commerce.

These two regulatory categories are interrelated. The broader category is similar to regulations imposed on foods generally by the FDA under the Federal Food, Drug, and Cosmetic Act. However, FSIS authorities also require compliance with the inspection provisions of the acts and regulations by anyone slaughtering poultry or livestock, or preparing poultry products, or meat or meat food products for use as human food. Thus, the requirements that establishments must meet to obtain inspection and to have products marked ''inspected and passed'' comprise a unique statutory scheme which provides the Secretary with broad rulemaking authorities.

From their inception, the meat and poultry inspection laws have recognized that sanitary conditions in establishments are critical to the safety and wholesomeness of the products being produced. Any product found to have been ''prepared, packed, or held under insanitary conditions whereby it may have become contaminated with filth, or whereby it may have been rendered injurious to health'' is adulterated. No product will be granted inspection or marked ''inspected and passed'' unless the sanitary conditions and practices required by the Secretary are maintained.

It is important to distinguish the statutorily required finding that a product is not adulterated from the absence of a finding that it is adulterated. Only products found not to be adulterated may be marked ''inspected and passed.'' Even if the evidence does not compel an inspector to find that a product is adulterated, it, nonetheless, may be enough to prevent him from finding that it is not adulterated. This means that products may not be distributed for food use without the affirmative determination that they are not adulterated. Products as to which such an affirmative determination has not been made must be retained at the establishment pending such determination. They are being detained because they have not been inspected and passed, not because they have been found to be adulterated.

Thus, FSIS clearly has the authority to require that establishments slaughtering livestock or poultry conduct and record tests for *E. coli* on carcasses to measure how well contamination is being avoided. These tests provide information by which establishments may evaluate and ensure the effectiveness of their sanitary procedures and related process controls in preventing product contamination during slaughter and dressing.

Although *E. coli* testing will not be used to determine the disposition of inspected products, it will be an effective indicator of the presence of fecal contamination that is not visible and therefore not detectable by traditional inspection methods. It will also provide FSIS with information necessary to determine how best to conduct inspection to ensure that product is not being adulterated.

Similarly, FSIS has clear authority to establish a *Salmonella* standard for producers of raw meat and poultry to reduce the public's exposure to *Salmonella* and associated pathogens from inspected meat and poultry products. The *Salmonella* standard, like the criteria for *E. coli* on carcasses, is based on the national baseline prevalence of the bacteria for the product of concern. However, unlike the *E. coli* criteria, which are, in essence, guidelines, the *Salmonella* standard must be met. Compliance will be determined by Agency testing.

FSIS is continuing its policy of permitting raw meat and poultry products to be marked and labeled ''inspected and passed,'' despite the known or suspected presence of some pathogenic bacteria. FSIS recognizes that currently there is no available technology (with the possible exception of irradiation) to ensure that raw product bears no pathogenic microorganisms.

However, there is overwhelming evidence that raw meat and poultry products are frequently contaminated with pathogens and expose consumers to avoidable and unacceptable risks of foodborne illness. FSIS's statutory mandate to protect consumers from adulterated product is not limited to actions associated with inspection. The Secretary may also regulate how meat and poultry products are stored and handled by anyone who buys, sells, freezes, stores, transports, or imports them, to ensure they are not misbranded or adulterated when delivered to the consumer.

The new pathogen reduction standards for *Salmonella* are necessary to establish that raw product is being produced under sanitary conditions, has not been prepared, packed or held under insanitary conditions, and is not for any other reason unsound, unhealthful, unwholesome, or otherwise unfit for human food.

The fact that the new performance standards and guidelines do not specify how the *E. coli* process control verification performance criteria or the *Salmonella* pathogen reduction standard must be met does not undercut the reasonableness or the legal basis of either testing program. Process control and the production of product that is not adulterated is the responsibility of the establishment, not the government. The Agency is responsible for establishing and enforcing reasonable standards; it intends to give the industry the maximum flexibility to decide how best to meet such standards. It does not intend to regulate or prescribe how the standards are to be met. FSIS will provide guidance and assistance to the industry, especially small businesses. But it is not legally obliged to provide technical services to establishments in finding the most efficient and effective way to operate within the *E. coli* criteria and to meet the *Salmonella* reduction standard.

In summary, FSIS has concluded that the *E. coli* testing program and the *Salmonella* reduction standard are fully supported by the FMIA and PPIA.

Performance Standards for Process Control

A related comment asserted that FSIS's proposed *Salmonella* standard was not a standard at all, but instead was merely an unenforceable criterion because its violation would not alone support seizure or condemnation of products. FSIS agrees with the principle that a regulatory standard should be enforceable, but does not agree that a regulatory ''standard'' must be limited to product-specific requirements, or to enforcement by seizure or condemnation of products. The Agency acknowledges that historically it has used the term ''standard'' normally to refer to regulations concerning particular products, e.g., standards of identity regulations, but notes that current government-wide regulatory reform efforts stress the use of ''performance standards'' to describe the desired focus of government regulations generally. FSIS intends now to issue regulations consistent with the notion behind ''performance standards,'' that to the extent possible regulations should tell regulated entities what they must achieve to comply with the law, while providing maximum flexibility regarding how to achieve the standard. Thus, FSIS agrees that one test of a ''standard'' might be that violation of that requirement alone supports some sort of regulatory sanction, but does not agree that ''standards'' should be limited to product-specific regulations or to enforcement actions directed at specific products. The FMIA and PPIA do not limit the Agency to product-specific regulations and enforcement activities, and for reasons fully discussed earlier in this preamble, the Agency has concluded that standards directed at processes are, at this time, the only practical way in which to effectively address the hazard presented by microbiological pathogens on raw meat and poultry products.

Basis for Target Levels

Some commenters questioned the validity of microbial target levels established by FSIS, while others supported FSIS national baseline studies as an effective way to evaluate industry performance. After careful review, the Agency considers it reasonable and appropriate to use the distribution of results observed for each animal species in the FSIS baseline surveys as the basis for both the *E. coli* criteria and the pathogen reduction performance standard for *Salmonella*. These are currently the best available data on the nationwide prevalence and level of microbial contamination of raw meat and poultry products. The data demonstrate that the *E. coli* process control verification criteria and the *Salmonella* pathogen reduction standard are being achieved by many establishments with today's technology and therefore are achievable by all establishments.

FSIS Nationwide Microbiological Baseline Data Collection Programs and its Nationwide Microbiological Surveys provide similar data, but the

''Programs'' generally involve more extensive sampling over a longer period, generally 12 months, than the ''Surveys'', which are generally limited to 6 months of data collection. They both have provided data for an ongoing microbial profile of carcasses and other raw meat and poultry products for selected microorganisms or groups of microorganisms of various degrees of public health concern of value as indicators of general hygiene or process control.

As explained above, FSIS plans to revise the performance criteria and standards as more current baseline data become available from future baseline surveys, through establishment *E. coli* testing, through FSIS *Salmonella* testing, or from other FSIS testing that may be appropriate for establishing criteria and standards.

Although the majority of commenters focused on the issues mentioned above, a number of others addressed various aspects of the proposed rule such as microbial testing methodology, the concept of end product testing, the role of FSIS personnel in test verification, enforcement actions for non-compliance, and laboratory qualifications.

Methodology for Meeting Targets

Some commenters raised objections to use of the ''moving sum'' statistical procedure for determining when microbial testing results are within the process control. Moving sum procedures are recognized in the field of statistical quality control. The American National Standard ''Guide for Quality Control Charts'' [11] identifies two principal uses of such charts: assisting judgment as to whether a state of control exists and attaining and maintaining control. In order to judge whether a state of control exists, operators must analyze ''collectively an accumulation of quality data.'' In the proposed regulation FSIS took this view of the purpose of the moving sum procedure: establishments would need to verify that a state of control exists with respect to the interim target set by the Agency. FSIS did not claim, however, that the procedure would be useful for the second purpose, attaining and maintaining control. That requires more timely and probably more intense monitoring of process parameters at CCP's.

The proposed approach to use testing to measure process control was designed to inform establishments how they are currently operating with respect to the relevant target, and to help them track progress toward meeting that target. A simple plot of the moving sum chart would give them sufficient feedback for this purpose.

Some commenters recommended that the moving window verification program should use a 90% probability criteria, rather than 80%, to reduce the possibility of the testing procedure erroneously identifying an establishment as not meeting the pathogen target. The Agency notes that the moving sum procedure was designed to measure effectiveness of process control with respect to an interim performance standard (called a target in the proposal) based on current industry performance (as determined by a baseline study). This measure was intended to be the first step in holding establishments accountable for meeting acceptable levels of performance. As such, the Agency wanted to be able to readily identify establishments operating above the target and wanted to provide an incentive for establishments to produce at levels better than (below) the target. Giving establishments producing at the target only an 80% chance of passing was expected to promote this. Giving establishments producing at the target a higher chance of passing (e.g., 95%) would reduce both the incentive to do better and the ability to detect establishments above the target.

Sample Size

Others specifically addressed the proposed sample size, recommending that the same number of samples be used for all species. Not all species have the same risks of failure, in part because of the varied incidence of pathogens, as was determined in FSIS's baseline surveys. The proposed sampling rate was the same for all establishments, one per day. Thus the sampling was the same for all establishments, only the rules for interpreting results were different. The number of results included in the window differed by product class because the target percents positive differed by product class. It was necessary to employ different-sized windows to maintain a fixed probability of passing (80%) at the target for all product classes while choosing as short a window as possible and allowing at least one positive in the window.

Testing Methodology

Other commenters asked for clarification on testing methodology. Some remarked that using a sponge or swab method to sample carcasses is preferable to the proposed excision method because the proposed method is time consuming, cumbersome, and expensive, and it may mutilate and contaminate the carcass. The Agency agrees and has elected to use non-destructive sampling methods.

Others asked for clarification of enforcement actions that would result from an establishment not meeting its microbial targets. How the rule will be enforced is addressed above.

Role of Inspectors

Still others asked about the role of inspection personnel in verification testing and expressed concern about the amount and type of training inspection personnel would receive to analyze test results.

The final rule makes slaughter process control verification testing (*E. coli*) the responsibility of establishments slaughtering livestock or poultry, although FSIS inspectors may also collect samples for *E. coli* testing as needed to carry out their oversight responsibilities. FSIS personnel sampling carcasses for *Salmonella* to ensure that establishments are meeting the pathogen reduction performance standard will send the samples to an Agency laboratory for analysis. FSIS personnel have been involved in collection of samples for FSIS's baseline surveys, and have been trained and are highly qualified to collect samples for this regulatory program. Inspectors will work with other program officials, including scientifically trained experts, in analyzing test results and making appropriate regulatory decisions. Inspectors will receive training to prepare them for their role in this process.

Laboratories

Some commenters asked for clarification regarding qualifications for in-house and outside laboratories. They stated that laboratories should be required to use standardized techniques for analyzing test results.

The microbiological test method used by the establishments must be AOAC validated techniques, or other methods validated by a scientific body in collaborated trials against the three tube most probable number (MPN) method and agreeing with the 95 percent upper and lower confidence interval, as discussed in the *E. coli* Methods Section. Establishments are responsible for the accuracy of the tests of their samples. If the samples are not analyzed by the establishment, the establishment, perhaps in concert with a trade association, should ensure that the laboratory it chooses is reputable and

[11] American National Standard ANSI Z1.1–1985. ''Guide for Quality Control Charts.'' American Society for Quality Control. Milwaukee, WI.

adheres to a Quality Control/Quality Assurance Program.

Alternative Sampling Under HACCP

Other commenters stated that the proposed microbial testing system does not reward very clean establishments by granting reasonable reductions in testing when significant periods are pathogen free. They recommended that once a facility has implemented its HACCP program, the required frequency for mandatory microbial testing should be reduced or eliminated altogether.

In this final rule, a slaughter establishment successfully operating under a validated HACCP plan may reduce the specified sampling frequency as long as the alternative sampling plan is an integral part of the establishment's verification procedures for its HACCP system. FSIS does, however, reserve the right to determine that the alternative frequency is inadequate to verify the effectiveness of the establishment's process controls. In that case, FSIS would notify the establishment in writing of its finding, advise that the frequency specified in the regulation must be maintained, and specify any conditions an acceptable alternative frequency would have to meet to be found acceptable to the Agency.

Relationship to HACCP

Finally, some commenters stated that the proposed end-product testing is inconsistent with HACCP principles and that establishments should decide for themselves through hazard analysis whether testing is needed and at what frequency. Others objected to the concept of end-product testing because it only measures effectiveness over a small percentage of a production lot and has limited value in measuring the overall success of a HACCP plan. Still others concluded that placing an emphasis on end-product testing gives consumers a false sense of confidence about the safety of meat and poultry products. A few commenters were concerned about product liability due to product recalls stemming from test results.

The objective of the generic *E. coli* testing is to verify that process control has been maintained by the establishment throughout the slaughter and dressing process and that resultant carcasses are produced hygienically. If processes are under control for *E. coli*, the potential presence of enteric pathogens will be reduced. End-product verification testing of this kind is a well recognized component of HACCP-based process control.[12] The goal of FSIS's *Salmonella* testing program is to verify that pathogen reduction performance meets current standards in each establishment and thereby effect a nationwide reduction in the incidence of that organism and other enteric pathogens on raw meat and poultry products. The end of production is the only point that reflects all steps in the production process and, ultimately, all elements of the HACCP system. The seventh HACCP principle is verification that the HACCP system is working; one cannot verify that HACCP is working in slaughter establishments (controlling fecal contamination/pathogens) without some end-product testing, so end-product testing is not inconsistent with HACCP principles. The two different kinds of testing programs: (1) *E. coli* testing by establishments to verify control of fecal contamination; and (2) *Salmonella* testing by FSIS to hold establishments accountable for meeting pathogen performance standards, are both forms of end-product testing that FSIS considers consistent with HACCP.

End-product testing as part of an overall system of HACCP-based process control and performance standards should not give consumers a false sense of confidence about the safety of meat and poultry products. FSIS recognizes that limited end-product testing alone provides little assurance of safety, but, as part of a process control system, appropriate end-product testing brings rigor and accountability to the system and should appropriately increase consumer confidence in the safety of products. By requiring HACCP, FSIS is in fact moving away from sole reliance on end-product assessments for lot acceptance, an approach that is the opposite of the HACCP system approach to food safety. FSIS recognizes that producing safe food requires preventing hazards throughout the process rather than relying solely on end-product testing to ensure safety. Establishments' liability to civil lawsuits should not be adversely affected by this rule precisely because it is an establishment's process, not individual lots of product, that is being assessed, for inspection purposes, on the basis of this testing.

V. Other Issues and Initiatives

*Antimicrobial Treatments*

FSIS proposed that all slaughter establishments apply at least one antimicrobial treatment or other approved intervention to livestock and poultry carcasses prior to the chilling or cooling operation. Proposed treatment methods included chlorine compounds, hot water, and any antimicrobial compound previously approved by FSIS and listed in the meat or poultry regulations. Product prepared for export to countries that restrict or prohibit the use of antimicrobial treatments would have been exempted from this requirement upon application to the Administrator.

While most commenters generally agreed that antimicrobial treatments could play an important role in reducing contamination with pathogenic microorganisms in slaughter establishments, many commenters opposed mandating such treatments. The commenters argued that mandating the use of antimicrobial treatments in slaughter operations would not be consistent with the HACCP philosophy and the overall shift by FSIS to greater reliance on performance standards.

FSIS agrees with these commenters and has decided not to mandate the use of antimicrobial treatments in slaughter establishments. FSIS continues to believe that slaughter establishments will find that these treatments can play a useful role in reducing pathogens and improving the safety of meat and poultry products. Rather than mandating specific antimicrobial treatments, FSIS will rely on other requirements in this final rule to ensure that slaughter establishments are achieving an acceptable level of performance in controlling and reducing harmful bacteria on raw product.

The principle of using antimicrobial treatments as an intervention to control pathogens on meat and poultry carcasses was strongly endorsed by most commenters. However, few agreed that the treatments should be mandatory. A majority of commenters recommended that antimicrobial treatments be voluntary interventions. Establishments would decide if antimicrobial interventions were needed to control specific hazards at one or more critical control points in the slaughter process.

Similarly, a number of commenters tied antimicrobial treatments to microbial testing. They argued that carcass treatments should not be required in establishments that consistently meet or exceed performance standards for microbial contamination.

Commenters said FSIS should focus its regulatory efforts on measurable, attainable goals and not on prescriptive requirements for particular processing steps. Several commenters emphasized the need for ''whole system'' interventions instead of single

[12] National Advisory Committee on Microbiological Criteria for Foods. 1994. ''Hazard Analysis and Critical Control Point Systems.'' FSIS, USDA.

techniques such as antimicrobial treatments. They said these interventions work best when they are tailored to species and product hazards, individual establishment configurations, and processing methods. Furthermore, some commenters cited a danger that establishments and inspection personnel would focus on the treatment function itself instead of broader food safety goals.

FSIS generally agrees with these comments. FSIS has concluded that its food safety goals can be achieved more effectively and more efficiently by requiring HACCP-based process control combined with appropriate performance criteria and standards than by mandating specific interventions, such as antimicrobial treatments. New technological interventions will play a significant role in reducing the risk of foodborne illness and should be adopted as part of an overall system of HACCP-based process control. FSIS expects that such treatments may be used by establishments to meet the process control performance criteria and pathogen reduction performance standards FSIS is adopting in this final rule.

A few commenters opposed mandating antimicrobial treatments because they believed their use would allow for correction of sloppy carcass dressing procedures. These commenters argued that antimicrobial treatments, whether mandatory or voluntary, emphasize post-contamination clean-up rather than prevention.

FSIS also received many comments which addressed the four proposed antimicrobial treatment methods. Many commenters stated that FSIS should not restrict establishments to these particular antimicrobial interventions.

A variety of commenters addressed technology issues concerning the proposed treatment methods themselves. Many said that too few studies have been conducted to show which interventions are most effective and efficient for specific pathogens associated with particular species in individual slaughter establishment configurations. Some argued that the studies FSIS cited in its proposal were too narrow and did not adequately demonstrate effectiveness. They said additional studies were needed to determine the practicality, efficacy, and expense of various antimicrobial treatments in commercial settings. In addition, some commenters were concerned that insufficient research was available on whether the elimination of competitive micro flora would allow uninhibited growth of pathogenic bacteria.

Individual antimicrobial techniques were also criticized. For example, hot water sprays were said to pose dangers to establishment personnel applying the treatments at temperatures necessary for effectiveness. Hot water sprays raise carcass temperatures with consequent melting of surface fat in some species, contribute to quality defects such as change in product color and partial cooking, and result in higher energy costs. Commenters recognized, however, that hot water was the only currently available nonchemical intervention that could be implemented at comparatively low cost. Other commenters criticized lactic, acetic, and citric acid solution sprays because they have low effectiveness as a treatment against *E. coli* O157:H7. The possible carcinogenic effects of chlorine were also mentioned, as were concerns about water reuse and possible environmental effects from spray effluents.

Commenters also suggested a variety of alternative antimicrobial interventions that could be used by establishments. These interventions included irradiation and radiation-emitting electronic devices such as x-rays and linear accelerators; high-energy ultraviolet light; pulsed light, sonic, infrasonic, and ultrasonic emitters; chemicals such as copper sulfate in the pentahydrate form, chlorine dioxide, and hydrogen peroxide; procedures such as pre-evisceration washes, water curtains, counter current or counter flow scalders, the *Peroxi bicarb* process, automatic warm fresh water rinses, ozonated water, steam pasteurization, steam vacuuming, hot wax dipping, and singeing.

A number of commenters also suggested that FSIS establish protocols to evaluate various forms of antimicrobial procedures and treatments. FSIS could then publish a regularly updated list of acceptable treatments and provide guidelines for their use in a commercial setting. It was argued that this process would give establishments the flexibility to implement any interventions they deem necessary. Others said FSIS should set up a predetermined protocol for antimicrobial agents or an expedited review process for new technologies.

FSIS agrees that issues of effectiveness, product and worker safety, product quality, interference with inspection, and environmental impact can be raised about most food safety interventions, including antimicrobial treatments. Therefore, to facilitate industry development of new technologies, FSIS has established a process that will facilitate this development.

On May 25, 1995, FSIS published a notice in the Federal Register (60 FR 27714) that presented guidelines for preparing and submitting experimental protocols to FSIS for use by establishments wishing to conduct trials of new technologies and procedures. In that notice, FSIS confirmed its long-standing commitment to foster innovative technologies and procedures that more effectively protect meat and poultry products from microbiological and other hazards. Specifically, FSIS encouraged the development of efficacious, practical and manageable technologies and procedures by establishments.

FSIS also published guidelines (FSIS Directive 10,700.1) for establishments to use for submitting written proposals and protocols to FSIS for approval to conduct experiments. Agency approval is required in cases where the intended technology, procedure or process may affect (1) product safety or lead to economic adulteration, (2) worker safety, (3) environmental safety, or (4) inspection procedures.

Similarly, FSIS published a proposed rule in the Federal Register (60 FR 67459; December 29, 1995) that will facilitate the review and approval of substances intended for use in or on meat and poultry products. Under the proposed procedures, FSIS would no longer issue its own regulations listing substances it finds suitable for use in meat and poultry products. Instead, FDA's regulations would specify whether a substance approved for use in foods under the Federal Food, Drug, and Cosmetic Act may be used in or on meat or poultry products.

Many commenters stated that antimicrobial interventions should be permitted at any stage in the slaughter process: live animal, pre-hide removal, pre- or post-carcass wash, pre- or post-chill, or just prior to fabrication.

Some commenters argued that the proposed treatments would seriously compromise the Kosher ritual salting process, while others said the interventions would conflict with Confucian and Buddhist-style poultry prepared for religious rites.

A number of commenters questioned the relationship between FSIS's policy on zero tolerance for fecal contamination and its antimicrobial treatment proposal. In particular, they were concerned about where in the process zero tolerance would be measured.

Finally, several commenters requested a practical definition of ''feces'' as a means to resolve disagreements between inspectors and establishment personnel about trimming contamination.

*Cooling and Chilling Requirements for Raw Meat and Poultry*

FSIS proposed that establishments slaughtering livestock be required to chill carcass surfaces and hot-boned meat to 50°F (10°C) within 5 hours and then to 40°F (4.4°C) within 24 hours of slaughter or meat and bone separation. Chilling of meat products such as liver and cheek meat would have been required to begin within one hour of removal from a carcass. The proposed rule also would have changed existing poultry chilling requirements (§ 381.66) to be comparable with those proposed for meat. Chilling would have been required unless the raw product was going directly from slaughter to heat processing.

The proposal also would have required that establishments maintain raw meat and poultry products at an internal temperature of 40°F or below while in the establishment and before release into commerce. Raw products not chilled in accordance with the requirements would have required further processing to kill pathogens or would be condemned.

Lastly, the proposal would have required each establishment handling raw product to have a written plan for temperature controls and monitoring and make monitoring records available to FSIS upon request.

The proposed rule was based on good manufacturing practices generally prevalent in the industry. FSIS's position was that temperature controls, which are known to prevent bacterial growth, are an accepted part of current industry practices, are already required by regulation for poultry carcasses, and should be mandated for all raw product to minimize the possibility that raw products leaving official establishments bear significant levels of pathogenic microorganisms.

Commenters generally supported the concept that establishments should be required to chill raw product as a means of minimizing the growth of harmful bacteria. Some commenters supported the time and temperature requirements as proposed. Others argued that the specific time and temperature combinations in the proposed rule were unduly restrictive and unworkable. A number of commenters advocated ''more realistic'' cooling requirements that take into consideration establishment and product variety, different processing operations, and diverse shipping and receiving operations. These commenters supported the use of independent ''process authorities'' to advise establishments on cooling carcasses and other raw products. Some suggested that the proposed chilling requirements should be recast as guidelines.

Many commenters questioned the need for any regulatory requirements for chilling and asserted that it was conceptually at odds with the proposed HACCP provisions. They recommended that FSIS defer any regulation on chilling because establishments would have to address chilling as part of their HACCP plans.

Some commenters raised concerns about the scientific basis of the proposed time and temperature requirements. They asserted that the cooling requirements would not result in any demonstrable improvement in food safety because they were not based on scientifically valid data. A number of commenters said that the proposed time and temperature requirements were simply not achievable by the beef industry due to the large size of beef carcasses. Also, they said that these carcass cooling requirements might change meat quality attributes such as product texture and palatability.

Many commenters asserted that FSIS's regulatory focus and the economic burdens are placed entirely on establishments when, these commenters argue, a large proportion of foodborne illnesses are caused by temperature abuse and other mishandling of raw products after they leave the establishment.

Many commenters expressed concern about risks to employees' health that could result from employees working continuously in a colder environment. They cited worker safety studies showing many human physical ailments are created or aggravated by cold ambient temperatures. Worker safety was also cited as an issue on the grounds that the difficulty of handling and cutting meat at such cold temperatures increases the potential for accidents and injuries.

Some commenters noted that FSIS did not specify how the equivalence of alternative procedures could be established. In addition, some suggested specific alternative methodologies they thought would provide equivalent procedures, such as cooling with dry ice, $CO_2$, or nitrogen. Others either did not approve of using any alternative chilling process or wanted them to be included in the final rule.

Some commenters questioned the rationale for proposing identical requirements for meat and poultry. They said that using the same set of requirements for all species fails to take into account the variation in carcass size.

Commenters from small businesses said they did not have the cooling capacity to comply with the proposed requirements, and that the cost of expanding facilities, obtaining the necessary refrigeration equipment, and retaining quantities of carcasses long enough to chill them to 40°F before shipping was prohibitive.

Other commenters said the time and temperature requirements conflicted with religious, cultural, and ethnic practices. For example, there are ethnic markets for ''hot pork,'' whereby hogs are slaughtered and delivered directly to customers for preparation and consumption with little or no intervening chilling. A similar process is used with lamb, goat, and beef for Moslem customers. Some commenters asserted that the proposed requirements also conflict with and preclude the Kosher process of ritual salting of poultry.

Commenters also were concerned that carcasses that are processed in one establishment and shipped to another establishment for immediate further processing or directly to an off-site cooling facility would have to meet carcass cooling requirements.

Questions were raised about the disposition of products that did not meet temperature requirements. Concern was expressed about the possible condemnation of large quantities of product based on slight deviations from temperature requirements that would not by themselves jeopardize food safety.

A number of commenters addressed the proposed shipping temperature requirements. Many asserted that temperature variation during shipping is a significant problem. Several commenters asked about their liability for product after it has left their custody and is found later, e.g., at a warehouse or retail establishment, to have been subjected to temperature abuse or other mishandling. Related comments stated that time and temperature controls were important at all stages of food production, especially at retail, and should be more of a focus of FSIS's regulatory oversight.

A few commenters expressed concern about the burden of preparing a written plan and the proposed recordkeeping requirements.

After reviewing the comments, FSIS agrees that the proposed regulations on this issue should not be promulgated at this time. FSIS is persuaded that the complexity and variety of acceptable chilling practices now in use make the proposed prescriptive time and temperature requirements unduly burdensome and impractical. FSIS

intends to seek an alternative that will not conflict with Kosher or other religious, cultural, or ethnic practices that do not present food safety hazards to consumers. FSIS has concluded that its food safety objectives may be achieved more effectively by regulatory means other than those proposed.

Nevertheless, FSIS continues to believe that prompt, thorough chilling of carcasses and raw meat and poultry products by slaughtering establishments is necessary to minimize consumers' exposure to pathogenic microorganisms. Cooling of carcasses is generally acknowledged to be an essential component of any establishment's processing controls for safe food production.

FSIS agrees with those commenters who stated that keeping raw products cooled after they leave the establishment, during transportation, storage, distribution, and sale to consumers, is essential if growth of pathogenic microorganisms on raw products is to be prevented. This is consistent with FSIS's farm-to-table food safety strategy.

Instead, FSIS believes that the best way to regulate in this area would be by having as a performance standard a maximum temperature for products being shipped into commerce, and at which raw products in commerce must be maintained. This standard would be applicable to all persons who handle such product before the product reaches the consumer. FSIS believes that there are at least two possible temperatures for this purpose.

A mandatory temperature of 41°F would provide a large margin of safety against the multiplication of pathogenic bacteria, which generally will not multiply at temperatures below 50°F. It is similar to the maximum temperature of 40°F originally proposed by FSIS and recommended in Agriculture Handbook No. 412. It is also the same temperature as that specified in the Food and Drug Administration's current model Food Code which is offered for adoption by States and other government entities with jurisdiction over food service, retail food stores and food vending machine operations.

Alternatively, a temperature of 45°F would still provide a margin of safety and also is that required in FDA's current Good Manufacturing Regulations for refrigerated foods generally. It also would comport with the temperature established for raw product in commerce by the European Union. That temperature is increasingly accepted as a standard for raw product storage and transportation by other countries and appears to be an emerging standard for international trade.

FSIS could supplement the shipping/storage temperature regulations with guidelines, including recommended criteria for microorganisms, that would provide purchasers and vendors in commerce additional means by which to determine whether products bear a level of bacteria indicative of temperature abuse and, therefore, are likely to bear levels of pathogenic microorganisms that could be associated with foodborne illnesses.

FSIS has concluded that development of such a performance standard requires that it obtain additional information and engage in further rulemaking. Therefore, FSIS will extend and expand this rulemaking proceeding on the issue of cooling raw meat and poultry products. FSIS will consider alternatives to the specific time and temperature requirements it proposed, including performance standards governing cooling during transportation and storage of raw meat and poultry, probably in the form of a maximum temperature for transporting and holding such product.

As the next step in its proceedings on this topic, FSIS plans to hold a public conference to gather further information on the many technical and practical issues raised in the comments as well as on possible alternatives to the proposal which will be outlined in the Agency's announcement of the conference.

*International Trade*

The inspection statutes require that meat and poultry products imported into the United States be produced under an inspection system equivalent to the U.S. inspection system.

A large number of commenters requested that FSIS clarify how it will determine the ''equivalence'' of foreign inspection systems following HACCP implementation. Commenters questioned exactly how FSIS will determine foreign system equivalency regarding HACCP systems. Further, some commenters asserted that requiring foreign equivalency with the U.S. HACCP system could create problems in foreign trade if HACCP implementation in the United States causes some foreign inspection programs previously designated ''equivalent'' to lose that designation.

Foreign countries with establishments exporting to the United States must establish inspection system requirements ''equivalent to'' U.S. requirements. This means that all foreign meat and poultry establishments that export meat to the United States must operate HACCP systems or process control systems ''equivalent to'' HACCP. They must also adopt equivalent performance standards.

The components of FSIS's current import inspection system will not change. As part of the evaluation of the laws, policies, and administration of the inspection system of any foreign country eligible to export meat or poultry products into the United States, FSIS will assess the status of HACCP—or equivalent process control system-implementation in that country. This assessment will include on-site reviews of individual establishments, laboratories, and other facilities within the foreign system. The ''equivalency'' of foreign inspection will be determined at this stage.

Further, when these regulations are implemented, the import inspection system will continue to include port-of-entry inspection by FSIS inspectors to verify the effectiveness of foreign inspection systems. All countries exporting raw products to the United States must develop and implement performance standards that are equivalent to the pathogen reduction performance standards for *Salmonella*. They must also be able to demonstrate that they have systems in place to assure compliance with the standards.

As of January 1, 1995, 1,395 establishments in 36 countries were certified to export meat or poultry products to the United States. Canada, with 599 establishments; Denmark, with 125; Australia, with 111 establishments; and New Zealand, with 94 establishments, accounted for two-thirds of those, which were collectively the source of 85 percent of the 2.6 billion pounds of product imported into the United States during 1994. Canada, Denmark, Australia, and New Zealand are currently developing HACCP systems.

Most of the comments concerning the impact on exports dealt with the proposed requirement for antimicrobial treatment of U.S. product and the proposed exemption for exported product. That proposed requirement raised particular concerns because the European Union member states and Canada restrict the use of certain antimicrobials on meat and poultry carcasses.

A number of commenters cited the fact that a proposed exemption would be ineffective because establishments cannot segregate treated product from untreated product. Commenters said this occurs because antimicrobial treatments are performed on whole carcasses, while most meat and poultry is exported in parts. This condition, the commenters argued, would cause

significant operational difficulty to establishments that were required to separate product that had and had not been treated, as well as inventory management problems. This requirement might also result in an artificial trade barrier with countries such as Canada, which restrict use of certain antimicrobial treatments. Suggestions were made that FSIS should obtain Codex support and acceptance for the proposed antimicrobial interventions as a means to overcome international objections to their use. The Agency's decision not to mandate antimicrobial treatments largely negates these concerns. FSIS will continue to work within Codex and in its bilateral relations with major trading partners to ensure that the scientific basis for food safety practices in the U.S. are understood and accepted.

The final rule will affect U.S. exports only if an establishment has difficulty meeting the new microbial performance standards without using an antimicrobial treatment. FSIS is aware that alternative technologies now available can facilitate international trade. For example, public comments indicated that trisodium phosphate is approved for use in Canada and the United Kingdom, and is being considered by the European Union, Australia, and New Zealand. Steam vacuum systems constitute an improved technology for establishments exporting beef and pork products.

*Recordkeeping and Record Retention*

FSIS notes that recordkeeping requirements and record retention periods for sanitation SOP's, microbiological testing, and HACCP are found in 416.12, 310.25(b)(4), and 381.94(b)(4), and 417.5, respectively. The proposed amendments to sections 320.1, 320.3, 381.175, and 381.177 were intended to continue FSIS' practice of cross-referencing recordkeeping requirements in §§ 320.1, 320.3, 381.175, and 381.177. FSIS has determined that it is unnecessary to amend these sections at this time, especially in view of its ongoing efforts to simplify, consolidate, and streamline the meat and poultry inspection regulations.

*Finished Product Standards for Poultry Carcasses*

FSIS proposed to remove the feces nonconformance specification from the poultry finished product standards regulations (§ 381.76, Table 1). That change in the poultry products inspection regulations is being effected not in this final rule but in the forthcoming final rule, ''Enhanced Poultry Inspection; Revision of Finished Product Standards with Respect to Fecal Contamination,'' Docket No. 94–016F.

VI. Economic Impact Analysis and Executive Orders

*Executive Order 12866*

This rule has been determined to be economically significant and was reviewed by OMB under Executive Order 12866.

HACCP-based Regulatory Program Produces Net Benefit to Society

FSIS has prepared a Final Regulatory Impact Assessment (FRIA) that evaluates the costs and benefits of a mandatory HACCP-based program for all meat and poultry establishments under inspection. The FRIA concludes that mandating HACCP systems will lead to potential benefits that far exceed industry implementation and operating costs.

The 20-year industry costs of implementing the HACCP-based regulatory program are estimated to be $968 to $1,156 million. The 20-year costs to the government are estimated at $56.5 million. FSIS estimated that the proposed rule would have 20-year costs of $2.2 billion dollars. The costs from the Preliminary Regulatory Impact Analysis (PRIA) are not directly comparable to costs estimated for the final rule. The proposed rule had a larger number of explicit regulatory requirements. The PRIA focused on estimating the predictable costs of meeting those requirements and included an implicit assumption that compliance with the proposed requirements would assure compliance with pathogen reduction objectives. In contrast, the final rule allows for greater flexibility in meeting the pathogen reduction standards, but also outlines a more rigorous enforcement strategy. Thus for the FRIA, it was necessary to develop separate cost estimates for the potential costs of meeting the new pathogen reduction performance standards for *Salmonella*. Modifications incorporated into the final rule have both reduced the total estimated costs and redistributed costs in a way that reduces the relative burden on smaller establishments.

Both the preliminary and final analysis identify a potential public health benefit of $7.13 to $26.59 billion, tied to eliminating the contamination by four pathogens that now occurs in meat and poultry establishments. These four pathogens include the three most common enteric pathogens of animal origin: *Campylobacter jejuni/coli, E. coli* O157:H7, *Salmonella* and one environmental pathogen *Listeria monocytogenes*. The potential benefit estimate is tied to the minimization of risk from the 90 percent of these pathogens that are estimated to contaminate meat and poultry during slaughter and dressing procedures. The remaining 10 percent of contamination is estimated to occur after the product leaves the manufacturing sector. The link between regulatory effectiveness, where effectiveness refers to the percentage of pathogens eliminated at the manufacturing stage, and health benefits is the assumption that a reduction in pathogens leads to a proportional reduction in foodborne illness. The high and low range for potential benefits occurs because of the current uncertainty in the estimates of the number of cases of foodborne illness and death attributable to pathogens that enter the meat and poultry supply at the manufacturing stage.

The benefits analysis in the FRIA concludes that there is insufficient knowledge to predict with certainty the effectiveness of the rule, where effectiveness refers to the percentage of pathogens eliminated at the manufacturing stage. Without specific predictions of effectiveness, FSIS has calculated projected health benefits for a range of effectiveness levels. For example, if the HACCP-based program can reduce the four pathogens by 50 percent and that reduction leads to a proportionate reduction in foodborne illness, the projected benefits range from $3.6 to $13.3 billion, which is half the potential benefit estimate of $7.13 to $26.59 billion.

If the low potential benefit estimate is correct, the analysis shows that the new HACCP-based program must reduce pathogens by 15 to 17 percent before benefits outweigh projected costs. If the high estimate is the correct estimate, the new program needs to reduce pathogens by only 4 to 5 percent to generate net societal benefits. While there were a large number of comments relating to the effectiveness estimates in the PRIA, there were no comments that claimed or implied that HACCP would not reduce pathogens at levels necessary to produce net societal benefits. The requirements of the final rule are organized around the following three components:

- The requirement that all inspected establishments develop and implement HACCP programs based on the seven recognized principles of HACCP.
- The requirement that all inspected establishments develop and implement Sanitation SOP's.
- The requirements that all establishments that slaughter cattle, swine, chickens or turkeys implement a microbial sampling

program using *E. coli* (generic) as a measure of control of slaughter and sanitary dressing procedures and that all establishments that slaughter cattle, swine, chickens or turkeys or produce raw ground product from these animals or birds meet new pathogen reduction performance standards for *Salmonella*.

The proposal and final rule can be viewed as two scenarios for implementing a mandatory HACCP-based regulatory program. While it's not possible to compare the benefits of these two options, the FRIA does present a comparison of the costs.

Table 5 summarizes the estimated costs for both the proposal and final rule by individual regulatory component. As mentioned above, the costs are not directly comparable because the regulatory components have changed. Table 5 shows that all costs have been eliminated for the components of time-and-temperature requirements and antimicrobial treatments. However, the discussion of potential costs in the FRIA recognizes that some establishments may use antimicrobial treatments to help meet the pathogen reduction performance standards for *Salmonella*. Other establishments may impose temperature limits to help control *Salmonella* growth.

Table 5 includes the final cost estimate for generic *E. coli* sampling in slaughter establishments under the regulatory component for microbial testing. The costs for required microbial sampling have decreased substantially from the proposal.

In the FRIA, FSIS increased or added a cost estimate for four regulatory components. First, based on comments, FSIS added costs for recurring training to account for the fact that employee turnover will sometimes require establishments to train additional employees. Second, FSIS also added a minimal cost for annual reassessment of HACCP plans, although the Agency believes that reassessment will be negligible for establishments successfully operating HACCP systems. Third, FSIS has increased the estimated cost for HACCP plan development. The estimate for this cost was increased after reviewing public comments and assessing the overall impact on plan development costs of decisions to eliminate time-and-temperature and antimicrobial treatment requirements prior to HACCP implementation. Finally, the Agency recognizes that some establishments will have difficulty meeting the new performance standards for *Salmonella* and that implementing sanitation SOP's and HACCP plans will not always assure sufficient pathogen reduction. The FRIA has developed two scenarios that lead to low and high cost estimates related to potential actions that establishments might undertake. Such actions include both process modifications to reduce pathogens and the implementation of *Salmonella* testing programs to assure compliance with the new performance standards.

As shown in Table 5, the two scenarios developed in the FRIA lead to a range in cost estimates of $55.5 to $243.5 million to comply with the new pathogen reduction standards for *Salmonella*. The FRIA recognizes that the performance criteria for generic *E. coli* also create a set of potential costs for slaughter establishments. A line for these costs is shown in Table 5 along with the entry that these costs were not separately quantified.

As discussed in the FRIA, the anticipated actions to comply with the generic *E. coli* criteria are the same as the anticipated actions to comply with the standards for *Salmonella*. FSIS has concluded that if the low cost scenario for *Salmonella* compliance proves to be more accurate, than the Agency would expect to see some compliance costs for the generic *E. coli* performance criteria. If the high cost scenario is correct, then the compliance actions taken to assure compliance with the *Salmonella* standards should also assure compliance with the generic *E. coli* criteria.

TABLE 5.—COMPARISON OF COSTS—PROPOSAL TO FINAL

[$ Millions—Present value of 20-year costs]

| Regulatory component | Proposal | Final |
|---|---|---|
| I. Sanitation SOP's | 175.9[a] | 171.9 |
| II. Time/Temperature Requirements | 45.5 | 0.0 |
| III. Antimicrobial Treatments | 51.7 | 0.0 |
| IV. Micro Testing | 1,396.3[b] | 174.1 |
| V. Compliance With *Salmonella* Standards | Not Separately Estimated[c] | 55.5–243.5 |
| Compliance with generic *E. coli* criteria | Not Applicable | Not Separately Estimated |
| VI. HACCP | | |
| Plan Development | 35.7 | 54.8 |
| Annual Plan Reassessment | 0.0 | 8.9 |
| Recordkeeping (Recording, Reviewing and Storing Data) | 456.4 | 440.5[d] |
| Initial Training | 24.2 | 22.7[d] |
| Recurring Training | 0.0 | 22.1[e] |
| VII. Additional Overtime | 20.9 | 17.5[d] |
| Subtotal—Industry Costs | 2,206.6 | 968.0–1,156.0 |
| VIII. FSIS Costs | 28.6[f] | 56.5 |
| Total | 2,235.2 | 1,024.5–1,212.5 |

[a] The preliminary analysis included a higher cost estimate for sanitation SOP's ($267.8 million) that resulted because of a programming error. The cost estimate of $175.9 million is based on an effective date of 90 days after publication.

[b] The preliminary analysis was based on the premise that microbial testing would be expanded to cover all meat and poultry processing after HACCP implementation. The proposed rule only required sampling for carcasses and raw ground product. Thus, the cost estimate of $1,396.3 million was higher than the actual cost of the proposed sampling requirements.

[c] The preliminary analysis accounted for some of the cost of complying with the new standards under the regulatory components of micro testing, antimicrobial treatments, and time and temperature requirements.

[d] These costs are slightly different from the proposal because of changes in the implementation schedule.

[e] FSIS added costs for recurring training based on the review of public comments.

[f] Based on current estimates for the cost of training, inspector upgrades, and $0.5 million for annual HACCP verification testing.

Market Failure Justifies Regulation of Pathogens

Since all raw meat and poultry products contain microorganisms that may be pathogens, raw food unavoidably entails some risk to consumers of pathogen-exposure and foodborne illness. The presence and level of this risk cannot be determined by a consumer since pathogens are not visible to the naked eye. The societal impact of this food safety information deficit is a lack of accountability for foodborne illnesses caused by pathogenic microorganisms. Consumers often cannot trace a transitory illness to any particular food or even be certain it was caused by food. Thus, food retailers and restaurateurs are generally not held accountable by their customers for selling pathogen-contaminated products and they, in turn, do not hold their wholesale suppliers accountable either.

This lack of marketplace accountability for foodborne illness means that meat and poultry producers and processors have little incentive to incur extra costs for more than minimal pathogen controls. The widespread lack of information about pathogen sources means that business at every level from farm to final sale can market unsafe products and not suffer legal consequences or a reduced demand for their product.

The science and technology required to reduce meat and poultry pathogens is well established, readily available, and commercially practical. FSIS has concluded that the lack of consumer information about meat and poultry product safety and the absence of adequate incentives for industry to provide more than minimal levels of processing safety represents a market failure requiring Federal regulatory intervention. The present combination of market regulation and industry self-policing has not resolved increasingly apparent problems with meat and poultry pathogens. Documented cases of foodborne illness each year, some of which have resulted in death, represent a public health risk that FSIS has determined to be unacceptable. A comprehensive Federal regulatory program is the only means available to society for lowering foodborne pathogen risks to an acceptable level. FSIS further concludes that a mandatory HACCP regulatory program is the only means to attain this goal.

Regulatory Alternatives

After considering broader regulatory approaches including market incentives and voluntary industry standards, FSIS has determined that effective process control is needed throughout the meat and poultry industry in order to minimize pathogen contamination of food products and lower the risk of subsequent foodborne illness.

FSIS examined the following seven process control approaches before determining that mandatory HACCP was the most effective means for industry to eliminate pathogens in meat and poultry:

- Status quo
- Intensify present inspection
- Voluntary HACCP regulatory program
- Mandatory HACCP regulation with exemption for small businesses
- Mandatory HACCP regulation only for ready-to-eat products
- Modified HACCP—negative records only
- Mandatory HACCP for all establishments

Each of these seven alternatives was assessed using the following five effectiveness factors for process control:

- Controls production safety hazards
- Reduces foodborne illness
- Makes inspection more effective
- Increases consumer confidence
- Provides the opportunity for increased productivity

Only mandatory HACCP for all establishments was determined to meet all five criteria; all of the others were found to be flawed in meeting one or more of the target factors.

The full text of the Final Regulatory Impact Analysis is published as a supplement to this document.

*Unfunded Mandates Reform Act*

The Unfunded Mandates Reform Act (P.L. 104–4) requires (in Section 202) that agencies prepare an assessment of anticipated costs and benefits before proposing any rule that may result in annual expenditures by State, local, and tribal governments, in the aggregate, or by the private sector, of $100,000,000, (adjusted annually for inflation). The preliminary and final RIA's fulfill this requirement of the Unfunded Mandates Reform Act. FSIS has treated both the proposed rule and this final rule as an economically significant regulatory action, i.e., annual cost to the private sector of more than $100,000,000, under Executive Order 12866 and has prepared a final Regulatory Impact Analysis (RIA) in compliance with the provisions of Executive Order 12866. The final RIA identifies annual recurring private sector costs of from $99.6 to $119.8 million and potential annual public health benefits of $.99 to $3.69 billion.

The Act also requires (in Section 205) that the Agency identify and consider a reasonable number of regulatory alternatives and, from these alternatives, select the least costly, most cost-effective, or least burdensome alternative that achieves the objective of the rule. In the final RIA, FSIS considered several broad regulatory alternatives and selected the one that is both cost-effective and also the least burdensome alternative that achieves the food safety objectives of the rule. FSIS concluded that market incentives will not address the public health risk resulting from microbial pathogens in meat and poultry, primarily because there is rarely feedback to consumers that allows more informed purchase decisions nor is there feedback which would permit consumers who experience a foodborne illness to routinely, and at low cost, seek compensation from responsible parties for losses arising from their foodborne illness. Thus, market solutions would not adequately address the food safety objectives on the rule. FSIS concluded that an industry administered system of voluntary standards is likely to be more expensive and less effective than a governmental one. Finally, FSIS has recognized that public education is essential for assuring food safety, but experience has shown that education alone has limited effectiveness in reducing foodborne illness. Thus, while consumer education may be cost-effective it would not meet the objective of substantially reducing foodborne illness.

Based on a qualitative analysis of broad regulatory strategies, the final RIA concluded that mandatory government standards were needed to achieve a solution that is both cost-effective and meets the objective of reducing the risk of foodborne illness from meat and poultry. Within the framework of a mandatory regulatory program, the final RIA discusses several alternatives to a mandatory HACCP-based program for all inspected establishments including intensified inspection, mandatory HACCP with a small business exemption and mandatory HACCP for only ready-to-eat products. These alternatives were evaluated using several criteria incorporating the goals of effectiveness, efficiency and increased consumer confidence. Using these criteria FSIS concluded that HACCP systems designed to meet microbial performance standards will be both cost-effective and the least burdensome alternative for meeting the foodborne illness reduction objectives of the rule. As the final RIA points out, requiring mandatory process control without microbial performance

standards could lead to processes that are well controlled at unacceptable pathogen levels. FSIS believes that microbial performance standards are necessary to achieve substantial pathogen reduction, encourage industry innovation, and provide the impetus for continuing improvement and increasing effectiveness.

Consistent with the requirements in Section 204 to provide opportunity for input from State, local and tribal government officials, FSIS held a ''Federal-State-Relations Conference,'' August 21–23, 1995, in Washington, D.C. This meeting, in which the National Association of State Departments of Agriculture participated, provided an opportunity for representatives from State government to engage in an open exchange with senior USDA officials on the Pathogen Reduction/HACCP proposal. In addition to Directors of State meat and poultry inspection programs, the meeting included representatives from State Departments of Agriculture, State Health Departments and local food safety enforcement agencies.

Also related to the Section 204 requirements, on May 22, 1995 the Agency held a public meeting for owners and representatives of small meat and poultry establishments and other affected small businesses to discuss the pathogen Reduction/HACCP proposal. Three Directors of State meat and poultry inspection programs provided comments at the meeting.

Section 202 of the Act also requires a summary and evaluation of comments received from State, local, or tribal governments. There were a large number of comments from State and local governments, elected members of State legislatures and associations representing State programs or businesses within States. Collectively, these comments covered most, if not all, of the issues addressed as part of this final rule. This preamble and the final RIA represent a summary and evaluation of these comments.

Most of the comments from State, local, or tribal governments addressed the potential economic impact on small businesses. The Kansas City meeting was intentionally focused on the small business issues. Comments from the State program Directors included recommendations for various forms of exemptions, voluntary programs or financial assistance for small State inspected establishments. The Federal-State-Relations-Conference included a more focused discussion on the cost to the State programs. Attendees stated that FSIS failed to adequately consider the cost of the changes to State programs and that FSIS was increasing the resource demands for State programs without providing adequate funding.

There were also written comments stating that the proposed rule was an unfunded Federal mandate because of the cost to small establishments and the potential impact on State inspection programs. The preliminary RIA did not address the impact on State programs. However, FSIS recognizes that the 27 States operating their own meat and poultry inspection programs will likely have to substantially modify their programs after the HACCP/Pathogen Reduction regulation is finalized to remain ''at least equal to'' Federal inspection programs as required by the FMIA and PPIA. During the regulation's implementation period, FSIS will be using the Agency's State-Federal Program resources to assist the States in bringing the necessary changes to the State inspection programs. Although FSIS has requested some additional funds to implement this rule, FSIS has also acknowledged that implementation of this rule will require eliminating some tasks, conducting other tasks differently and streamlining the organization in order to free up resources to fully address the new requirements. FSIS believes that the same type of restructuring or reprogramming will take place within the State programs. This does guarantee, however, that all States with inspection programs will be able to implement the necessary program changes without additional funds. FSIS believes, however, that with FSIS assistance and with the flexibility provided under the ''equal to'' provisions, most of the States should be able to modify their programs with minimal additional costs. To the extent that there are any additional costs, the State inspection programs are eligible to receive up to 50 percent Federal matching funds.

*Regulatory Flexibility Act*

The Administrator, FSIS, has determined that this rule will have a significant economic impact on a substantial number of small entities. This final rule uses two size criteria for providing regulatory flexibility for small entities. For livestock and poultry slaughter facilities, the microbial sampling requirements vary depending on the number of animals or birds slaughtered annually. This will significantly reduce the microbial testing costs for smaller establishments which, under the proposed rule, would have been required to test each species they slaughter every day on which slaughter of that species occurred. Under the final rule, establishments that annually slaughter fewer than 6,000 cattle, 20,000 swine (or a combination of such livestock not to exceed a total of 20,000, with a maximum of 6,000 cattle), 60,000 turkeys or 440,000 chickens (or a combination of chickens and turkeys not to exceed 60,000 turkeys or 440,000 birds total) will not be required to operate microbial sampling programs on a continuous basis. Over 78 percent (2,098) of the total 2,682 slaughter establishments meet these criteria. These establishments will be required to annually verify that their slaughter and sanitary dressing processes are under control. However, after an initial period of sampling in each year, these establishments will be required to conduct further sampling in that year only if they make major changes to facilities, equipment, and personnel whereby the slaughter and dressing process is significantly changed.

These low-volume establishments will be required to analyze one sample per week until they have demonstrated compliance with established criteria. At a minimum, low-volume slaughter establishments will be required to collect and analyze one sample per week until they complete a sampling window (13 samples) annually in order to assess whether the performance criteria continue to be met.

Small slaughter establishments that process only minor species (e.g., goats, sheep, ducks, pheasants, etc.) will not be required to conduct any sampling. Small slaughter establishments will also face less burden because the final rule no longer requires that both cattle and swine or chickens and turkeys be sampled in the same establishment, i.e., if a low-volume establishment slaughters both cattle and swine or turkeys and chickens, it will be required to analyze one sample per week from the predominant species until it has demonstrated compliance with established criteria. The costs of small slaughter establishments are also reduced because the carcass cooling and antimicrobial near-term requirements have been eliminated from the final rule. Sampling frequencies for even the larger slaughter establishments will be based on production-volume, thus spreading the cost per pound relatively equally among establishments.

For the purpose of sequencing HACCP implementation FSIS has defined a small entity using the Small Business Administration size standard for a small meat or poultry manufacturing establishment. That is, all establishments with fewer than 500 employees will have additional time to implement HACCP. In addition, in

response to comments that there are hundreds of ''very small'' or ''micro'' establishments, the Agency will classify an establishment as ''very small'' if it has either fewer than 10 employees or annual sales of less than $2.5 million. This sequencing of HACCP responds to a large number of comments requesting that small businesses be given a longer period of time to implement HACCP requirements. Many small businesses stated they did not want to be exempt, but asked for more flexibility in implementing HACCP.

The FRIA is based on 353 large firms implementing HACCP at 18 months, 2,941 small firms implementing HACCP at 30 months and 5,785 very small (2,892 Federal plus 2,893 State) firms implementing HACCP at 42 months.

Table 6 illustrates the costs for a small, single-shift, processing establishment (no TQC or sanitation PQC program) with two distinct production operations other than raw ground product (overall average estimated at 2.29 operations per establishment).

TABLE 6.—COSTS FOR TYPICAL SINGLE-SHIFT PROCESSING ESTABLISHMENT

[Dollars]

| Requirement | Development and implementation costs | Recurring annual costs |
|---|---|---|
| Sanitation SOP's | 190 | 1,242 |
| HACCP Plan Development | 6,958 | 0 |
| Annual Plan Reassessment ... | 0 | 102 |
| Training ..... | 2,514 | 251 |
| Recordkeeping | 0 | 6,480 |
| Total ..... | 9,662 | 8,075 |

If one of the two production operations produced a raw ground product, the establishment would have to meet the pathogen reduction performance standard for that product. The FRIA points out that raw ground operations do not have the same opportunities to reduce *Salmonella* levels as do slaughter establishments. They can control growth by avoiding temperature abuse and can limit cross-contamination, but basically they must depend on the *Salmonella* levels of their incoming product in order to meet the performance standards. These establishments may choose to test incoming product in order to eliminate suppliers whose product is found to be positive. The FRIA has assumed that the low volume producers would not test incoming ingredients.

Table 7 illustrates the costs for a small, single-shift, combination (slaughter and further processing) establishment that slaughters cattle or swine, but not both, and has a single further processing operation other than ground product. The establishment is not under TQC inspection.

The cost of meeting the pathogen reduction performance standards assumes that the establishment will use a hot water antimicrobial rinse and have one sample per month analyzed at an outside laboratory ($33.35 per sample-$400 per year). The average number of head slaughtered in a low volume establishment is approximately 5,000 annually. The annual cost for the rinse is $400.

TABLE 7.—COSTS FOR TYPICAL SINGLE-SHIFT COMBINATION ESTABLISHMENT

[Dollars]

| Requirement | Development and implementation costs | Recurring annual costs |
|---|---|---|
| Sanitation SOP's | 190 | 1,242 |
| Compliance with *Salmonella* Standards ..... | 0 | 800 |
| *E. coli* Sampling | 1,043 | 653 |
| HACCP Plan Development | 6,958 | 0 |
| Annual Plan Reassessment ... | 0 | 102 |
| Training ..... | 5,028 | 503 |
| Recordkeeping | 0 | 5,434 |
| Total ..... | 13,219 | 8,734 |

The development costs for *E. coli* sampling in the small establishment includes $640 for developing a sampling plan and $403 to train an individual to conduct aseptic sampling. The recurring costs are based on the assumption that an average low volume slaughter establishment will have to complete two sampling windows (26 samples) before they demonstrate compliance with established criteria.

The cost of HACCP training has doubled for the combination establishment because the FRIA assumed that slaughter and processing operations are significantly different, so that the establishment must either train two employees or send one employee to two separate training courses.

The HACCP recordkeeping costs (monitoring CCPs and recording findings, reviewing records and storing records) in the above two examples assume that the establishments are operating each process continuously over a standard 52-week, 260-day, 2,080-hour work year. Data collected during the preliminary analysis indicates that many low-volume establishments frequently have only a single production line operating at a given time. The final analysis estimates an average annual cost for HACCP monitoring and recording of $4,030 for low-volume establishments.

*Executive Order 12778*

This rule has been reviewed pursuant to Executive Order 12778, Civil Justice Reform. States and local jurisdictions are preempted under the FMIA and PPIA from imposing any requirements with respect to federally inspected premises and facilities, and operations of such establishments, that are in addition to, or different from, those imposed under the FMIA and PPIA. States and local jurisdictions may, however, exercise concurrent jurisdiction over meat and poultry products that are outside official establishments for the purpose of preventing the distribution of meat or poultry products that are misbranded or adulterated under the FMIA or PPIA, or, in the case of imported articles, which are not at such an establishment, after their entry into the United States. Under the FMIA and PPIA, States that maintain meat and poultry inspection programs must impose requirements on State-inspected products and establishments that are at least equal to those required under the FMIA and the PPIA. These States may, however, impose more stringent requirements on such State-inspected products and establishments.

*Paperwork Requirements*

The paperwork and recordkeeping for this rule are approved under OMB number 0583–0103, ''Pathogen Reduction, Hazard Analysis and Critical Control Points (HACCP) Systems.'' OMB approved 14,371,901 annual reporting hours. Overall, the burden hours associated with the rule decreased. FSIS determined that the new burden is 8,053,319 hours, a 6,318,582-hour reduction. This reduction resulted from the elimination of proposed requirements and the adjustment of certain burden hour estimations. The following discusses the finalized paperwork and recordkeeping requirements and the changes in the burden estimations.

Sanitation Standard Operating Procedures (Sanitation SOP's)

As part of establishments' sanitation requirements, each establishment must develop and maintain Sanitation SOP's that must, at a minimum, address core

sanitation procedures. As part of the Sanitation SOP's, establishment employees(s) must record results of daily sanitation checks on a checklist at the frequencies stated in the Sanitation SOP's. The checklist must include both preoperational sanitation checks and operational sanitation checks. This checklist must be made available to FSIS upon request.

Agency subject matter experts and private consultants estimate that it will take an average of 5, 10, and 25 hours to develop a sanitation program for low, medium, and high volume establishments, respectively. The burden of documenting the adherence to Sanitation SOP's is based on three factors; recording, reviewing, and storage. Recording encompasses conducting and inscribing the finding from an observation and filing of the document produced. This action is assumed to take 15, 25, and 45 minutes per day in a low-, medium-, and high-volume establishment, respectively. Review of the records generated is estimated to take 5, 10, and 20 minutes per day for a low-, medium-, and high-volume establishment, respectively.

OMB approved 1,243,622 burden hours for Sanitation SOP's plan development, recording and filing, and record review. FSIS determined that the burden estimate for these activities was too high. Based on more accurate data, FSIS reevaluated the burden estimate and calculated the new burden hours to be 1,231,986 hours. This is a 11,636 burden hour decrease.

Time and Temperature

As discussed earlier, the proposed time-and-temperature requirements are eliminated. OMB approved 869,156 burden hours for time-and-temperature requirements. Therefore, elimination of the time-and-temperature requirements, results in a 869,156 burden hour decrease.

Microbiological Testing

As part of microbiological testing, each slaughter establishment must develop written procedures outlining specimen collection and handling. The slaughter establishments will be responsible for entering the results into a statistical process control chart or table. The data and chart will be available for review by FSIS upon request.

Agency subject matter experts estimate that it will take 25 hours for establishments to develop a microbial sampling and analysis plan. It will take an estimated 17.5 minutes to collect samples and 5 minutes per sample to enter data into the chart, review, and file the information.

OMB has approved 1,177,924 burden hours for microbial testing plan development, sample collection, and data entry by meat and poultry establishments. As discussed earlier, the number of meat and poultry establishments required by the Pathogen Reduction/HACCP proposal to perform microbial testing and the number of tests required decreased. FSIS reevaluated this burden estimate and concluded that the burden for microbial testing by meat and poultry establishments is 468,061 burden hours. Therefore, the burden hour decrease associated with microbial testing is 709,863 hours.

HACCP

Establishments will develop written HACCP plans that include: identification of the food safety hazards reasonably likely to occur; identification and description of the critical control point for each identified hazard; specification of the critical limit that may not be exceeded at the CCP; description of the monitoring procedure or device to be used; description of the corrective action to be taken if the limit is exceeded; description of the records that will be generated and maintained regarding this CCP; and description of the establishment verification activities and the frequency at which they are to be conducted. Performance standards or limits specified in related FSIS regulations must be accounted for in the critical limits.

Establishments will keep records of measurements taken during slaughter and processing, corrective actions, verification check results, and related activities that contain the identity of the product, the product code or slaughter production lot, and the date the record was made. The record will be signed by the operator or observer.

The HACCP records will be reviewed by an establishment employee other than the one who produced the record, if practicable, before the product is distributed in commerce. If a HACCP-trained individual is on-site, that person should be the second reviewer. The reviewer will sign the records.

Although the amount of time to develop a plan for each process varies based on its difficulty, Agency subject matter experts estimate that low, medium, high volume and state establishments will need an average of 136, 126, 113, and 78 hours to develop each plan. There are an estimated 7.4 CCP's for each processing plan in Federal establishments, 5 CCP's for each slaughter plan in Federal establishments, and 5 CCP's for both types of plans in State slaughter establishments. The recording and filing is assessed to take 5 minutes per CCP and the review should take 2 minutes per CCP.

OMB approved 11,081,199 burden hours for the maintenance of the HACCP-trained individual's resume, plan development, recording, and record review. As discussed earlier, FSIS will not require personnel resumes to be maintained, thus the burden reported for this activity is eliminated. Also, FSIS determined that the burden estimate for plan development, recording, and record review was too high. Based on more accurate data, FSIS reevaluated the burden estimate and calculated the new burden hours to be 6,353,272. This is a 4,727,927 burden hour decrease.

To better illuminate the burden hour changes, the following table is provided.

TABLE 8.—CHANGES IN BURDEN HOURS

| Requirement | Burden hours approved by OMB | New burden hours | Reduction in burden hours |
|---|---|---|---|
| SOP's for Sanitation | 1,243,622 | 1,231,986 | 11,636 |
| Time and Temperature | 869,156 | 0.00 | 869,156 |
| Microbiological Testing | 1,177,924 | 468,061 | 709,863 |
| HACCP | 11,081,199 | 6,353,272 | 4,727,927 |
| Total (Hours) | 14,371,901 | 8,053,319 | 6,318,582 |

The changes in the paperwork and recordkeeping requirements contained in this rule have been submitted to the Office of Management and Budget for approval under the Paperwork Reduction Act (44 U.S.C. 3501 *et seq.*).

VII. Final Rules

List of Subjects

*9 CFR Part 304*

Meat inspection.

*9 CFR Part 308*

Meat inspection.

*9 CFR Part 310*

Meat inspection, Microbial testing.

*9 CFR Part 320*

Meat inspection, Reporting and recordkeeping requirements.

*9 CFR Part 327*

Imports.

*9 CFR Part 381*

Poultry and Poultry products, Microbial testing.

*9 CFR Part 416*

Sanitation.

*9 CFR Part 417*

Hazard Analysis and Critical Control Point (HACCP) Systems.

For reasons set forth in the preamble, 9 CFR chapter III is amended as follows:

## PART 304—APPLICATION FOR INSPECTION; GRANT OR REFUSAL OF INSPECTION

1. The authority citation for part 304 is revised to read as follows:

Authority: 21 U.S.C. 601–695; 7 CFR 2.18, 2.53.

2. Section 304.3 is added to read as follows:

### § 304.3 Conditions for receiving inspection.

(a) Before being granted Federal inspection, an establishment shall have developed written sanitation Standard Operating Procedures, as required by part 416 of this chapter.

(b) Before being granted Federal inspection, an establishment shall have conducted a hazard analysis and developed and validated a HACCP plan, as required by §§ 417.2 and 417.4 of this chapter. A conditional grant of inspection shall be issued for a period not to exceed 90 days, during which period the establishment must validate its HACCP plan.

(c) Before producing new product for distribution in commerce, an establishment shall have conducted a hazard analysis and developed a HACCP plan applicable to that product in accordance with § 417.2 of this chapter. During a period not to exceed 90 days after the date the new product is produced for distribution in commerce, the establishment shall validate its HACCP plan, in accordance with § 417.4 of this chapter.

## PART 308—SANITATION

3. The authority citation for part 308 is revised to read as follows:

Authority: 21 U.S.C. 601–695; 7 CFR 2.18, 2.53.

4. Section 308.3 is amended by adding a sentence to the end of paragraph (a) to read as follows:

### § 308.3 Establishments; sanitary condition; requirements.

(a) * * *. The provisions of part 416 of this chapter also apply.

* * * * *

## PART 310—POST MORTEM INSPECTION

5. The authority citation for part 310 is revised to read as follows:

Authority: 21 U.S.C. 601–695; 7 CFR 2.18, 2.53.

6. Part 310 is amended by adding a new § 310.25 to read as follows:

### § 310.25 Contamination with microorganisms; pathogen reduction performance standards for Salmonella.

(a) Criteria for verifying process control; *E. coli* testing.

(1) Each official establishment that slaughters cattle and/or hogs shall test for *Escherichia coli* Biotype I (*E. coli*) and shall:

(i) Collect samples in accordance with the sampling techniques, methodology, and frequency requirements in paragraph (a)(2) of this section;

(ii) Obtain analytic results in accordance with paragraph (a)(3) of this section; and

(iii) Maintain records of such analytic results in accordance with paragraph (a)(4) of this section.

(2) Sampling requirements.

(i) *Written procedures.* Each establishment shall prepare written specimen collection procedures which shall identify employees designated to collect samples, and shall address location(s) of sampling, how sampling randomness is achieved, and handling of the sample to ensure sample integrity. The written procedure shall be made available to FSIS upon request.

(ii) *Sample collection.* The establishment shall collect random samples from carcasses in the cooler. Samples shall be collected by sponging three sites on the selected carcass. On cattle carcasses, establishments shall take samples from the flank, brisket, and rump; on swine carcasses, establishments shall take samples from the ham, belly, and jowl areas. [1]

(iii) *Sampling frequency.* Samples shall be taken at a frequency proportional to a slaughter establishment's volume of production, at the following rates:

Bovines: 1 test per 300 carcasses
Swine: 1 test per 1,000 carcasses

(iv) *Sampling frequency alternatives.* An establishment operating under a validated HACCP plan in accordance with § 417.2(b) of this chapter may substitute an alternative frequency for the frequency of sampling required under paragraph (a)(2)(iii) of this section if,

(A) The alternative is an integral part of the establishment's verification procedures for its HACCP plan and,

(B) FSIS does not determine, and notify the establishment in writing, that the alternative frequency is inadequate to verify the effectiveness of the establishment's processing controls.

(v) *Sampling in very low volume establishments.*

(A) An establishment annually slaughtering no more than 6,000 bovines, 20,000 swine, or a combination of bovines and swine not exceeding 6,000 bovines and 20,000 animals total, shall collect one sample per week starting the first full week of June and continuing through August of each year. An establishment slaughtering both species shall collect samples from the species it slaughters in larger numbers. Weekly samples shall be collected and tested until the establishment has completed and recorded one series of 13 tests that meets the criteria shown in Table 1 of paragraph (a)(5) of this section.

(B) Upon the establishment's meeting requirements of paragraph (a)(2)(v)(A) of this section, weekly sampling and testing is optional, unless changes are made in establishment facilities, equipment, personnel or procedures that may affect the adequacy of existing process control measures, as determined by the establishment or FSIS. FSIS determinations that changes have been made requiring resumption of weekly testing shall be provided to the establishment in writing.

(3) *Analysis of samples.* Laboratories may use any quantitative method for

[1] A copy of FSIS's ''Guidelines for *E. coli* Testing for Process Control verification in Cattle and Swine Slaughter Establishments'' is available for inspection in the FSIS Docket Room.

analysis of *E. coli* that is approved by the Association of Official Analytic Chemists International [2] or approved by a scientific body in collaborative trials against the three tube Most Probable Number (MPN) method and agreeing with the 95 percent upper and lower confidence limit of the appropriate MPN index.

(4) *Recording of test results.* The establishment shall maintain accurate records of all test results, in terms of cfu/cm$^2$ of surface area sponged. Results shall be recorded onto a process control chart or table showing at least the most recent 13 test results, by class of livestock slaughtered, permitting evaluation of the laboratory results in accordance with the criteria set forth in paragraph (a)(5) of this section. Records shall be retained at the establishment for a period of 12 months and shall be made available to FSIS upon request.

(5) *Criteria for Evaluation of test results.* An establishment is operating within the criteria when the most recent *E. coli* test result does not exceed the upper limit (M), and the number of samples, if any, testing positive at levels above (m) is three or fewer out of the most recent 13 samples (n) taken, as follows:

TABLE 1.—EVALUATION OF E. COLI TEST RESULTS

| Slaughter class | Lower limit of marginal range (m) | Upper limit of marginal range (M) | Number of samples tested (n) | Maximum number permitted in marginal range (c) |
|---|---|---|---|---|
| Steers/heifers | Negative [a] | 100 cfu/cm$^2$ | 13 | 3 |
| Cows/bulls | Negative [a] | 100 cfu/cm$^2$ | 13 | 3 |
| Market hogs | 10 cfu/cm$^2$ | 10,000 cfu/cm$^2$ | 13 | 3 |

[a] Negative is defined by the sensitivity of the method used in the baseline study with a limit of sensitivity of at least 5 cfu/cm$^2$ carcass surface area.

(6) *Failure to meet criteria.* Test results that do not meet the criteria described in paragraph (a)(5) of this section are an indication that the establishment may not be maintaining process controls sufficient to prevent fecal contamination. FSIS shall take further action as appropriate to ensure that all applicable provisions of the law are being met.

(7) *Failure to test and record.* Inspection shall be suspended in accordance with rules of practice that will be adopted for such proceedings upon a finding by FSIS that one or more provisions of paragraphs (a) (1)–(4) of this section have not been complied with and written notice of same has been provided to the establishment.

(b) Pathogen reduction performance standard; *Salmonella.*

(1) *Raw meat product performance standards for Salmonella.* An establishment's raw meat products, when sampled and tested by FSIS for *Salmonella*, as set forth in this section, may not test positive for *Salmonella* at a rate exceeding the applicable national pathogen reduction performance standard, as provided in Table 2:

TABLE 2.—SALMONELLA PERFORMANCE STANDARDS

| Class of product | Performance Standard (percent positive for *Salmonella*) [a] | Number of samples tested (n) | Maximum number of positives to achieve Standard (c) |
|---|---|---|---|
| Steers/heifers | 1.0% | 82 | 1 |
| Cows/bulls | 2.7% | 58 | 2 |
| Ground beef | 7.5% | 53 | 5 |
| Hogs | 8.7% | 55 | 6 |
| Fresh pork sausages | [b] N.A. | N.A. | N.A. |

[a] Performance Standards are FSIS's calculation of the national prevalence of *Salmonella* on the indicated raw product based on data developed by FSIS in its nationwide microbiological data collection programs and surveys. Copies of Reports on FSIS's Nationwide Microbiological Data Collection Programs and Nationwide Microbiological Surveys used in determining the prevalence of *Salmonella* on raw products are available in the FSIS Docket Room.

[b] Not available; values for fresh pork sausage will be added upon completion data collection programs for those products.

(2) *Enforcement.* FSIS will sample and test raw meat products in an individual establishment on an unannounced basis to determine prevalence of *Salmonella* in such products to determine compliance with the standard. The frequency and timing of such testing will be based on the establishment's previous test results and other information concerning the establishment's performance. In an establishment producing more than one class of product subject to the pathogen reduction standard, FSIS may sample any or all such classes of products.[3]

(3) *Noncompliance and establishment response.* When FSIS determines that an

[2] A copy of the ''Official Methods of Analysis of the Association of Official Analytical Chemists International,'' 16th edition, 1995, is on file with the Director, Office of the Federal Register, and may be purchased from the Association of Official Analytical Chemists International, Inc., 481 North Frederick Ave., Suite 500, Gaithersburg, MD 20877–2417.

[3] A copy of FSIS's ''Sample Collection Guidelines and Procedure for Isolation and Identification of *Salmonella* from Meat and Poultry Products'' is available for inspection in the FSIS Docket Room.

establishment has not met the performance standard:

(i) The establishment shall take immediate action to meet the standard.

(ii) If the establishment fails to meet the standard on the next series of compliance tests for that product, the establishment shall reassess its HACCP plan for that product and take appropriate corrective actions.

(iii) Failure by the establishment to act in accordance with paragraph (b)(3)(ii) of this section, or failure to meet the standard on the third consecutive series of FSIS-conducted tests for that product, constitutes failure to maintain sanitary conditions and failure to maintain an adequate HACCP plan, in accordance with part 417 of this chapter, for that product, and will cause FSIS to suspend inspection services. Such suspension will remain in effect until the establishment submits to the FSIS Administrator or his/her designee satisfactory written assurances detailing the action taken to correct the HACCP system and, as appropriate, other measures taken by the establishment to reduce the prevalence of pathogens.

7. The authority citation for part 320 continues to read as follows:

Authority: 21 U.S.C. 601–695; 7 CFR 2.18, 2.53.

8. Section 320.6 is amended by revising paragraph (a) to read as follows:

**§ 320.6 Information and reports required from official establishment operators.**

(a) The operator of each official establishment shall furnish to Program employees accurate information as to all matters needed by them for making their daily reports of the amount of products prepared or handled in the departments of the establishment to which they are assigned and such reports concerning sanitation, mandatory microbiological testing, and other aspects of the operations of the establishment and the conduct of inspection, as may be required by the Administrator in special cases.

* * * * *

## PART 327—IMPORTED PRODUCTS

9. The authority citation for Part 327 continues to read as follows:

Authority: 21 U.S.C. 601–695; 7 CFR 2.18, 2.53.

10. Section 327.2 is amended by redesignating paragraphs (a)(2)(i) (*a*)–(*g*) as (a)(2)(i) (A)–(G), redesignating paragraphs (a)(2)(ii) (*a*)–(*g*) to (a)(2)(ii) (A)–(G), redesignating paragraph (a)(2)(ii)(*h*) as (a)(2)(ii)(I), and by adding a new paragraph (a)(2)(ii)(H) to read as set forth below, and by redesignating paragraphs (a)(2)(iv) (*a*)–(*c*) as (a)(2)(iv) (A)–(C).

**§ 327.2 Eligibility of foreign countries for importation of products into the United States.**

* * * * *

(a) * * *

(2) * * *

(ii) * * *

(H) A Hazard Analysis and Critical Control Point (HACCP) system, as set forth in part 417 of this chapter.

* * * * *

## PART 381—POULTRY PRODUCTS INSPECTION REGULATIONS

11. The authority citation for part 381 is revised to read as follows:

Authority: 7 U.S.C. 138f, 450; 21 U.S.C. 451–470; 7 CFR 2.18, 2.53.

### Subpart D—Application for Inspection; Grant or Refusal of Inspection

12. A new § 381.22 is added to subpart D to read as follows:

**§ 381.22 Conditions for receiving inspection.**

(a) Before being granted Federal inspection, an establishment shall have developed written sanitation Standard Operating Procedures, in accordance with Part 416 of this chapter.

(b) Before being granted Federal inspection, an establishment shall have conducted a hazard analysis and developed and validated a HACCP plan, in accordance with §§ 417.2 and 417.4 of this chapter. A conditional grant of inspection shall be issued for a period not to exceed 90 days, during which period the establishment must validate its HACCP plan.

(c) Before producing new product for distribution in commerce, an establishment shall have conducted a hazard analysis and developed a HACCP plan applicable to that product in accordance with § 417.2 of this chapter. During a period not to exceed 90 days after the date the new product is produced for distribution in commerce, the establishment shall validate its HACCP plan, in accordance with § 417.4 of this chapter.

### Subpart H—Sanitation

13. Section 381.45 is amended to read as follows:

**§ 381.45 Minimum standards for sanitation, facilities, and operating procedures in official establishments.**

The provisions of §§ 381.46 and 381.61, inclusive, and part 416 of this chapter shall apply with respect to all official establishments.

### Subpart K—Post Mortem Inspection: Disposition of Carcasses and Parts

14. Section 381.94 is added to subpart K to read as follows:

**§ 381.94 Contamination with Microorganisms; process control verification criteria and testing; pathogen reduction standards.**

(a) Criteria for verifying process control; *E. coli* testing.

(1) Each official establishment that slaughters poultry shall test for *Escherichia coli* Biotype I (*E. coli*) and shall:

(i) Collect samples in accordance with the sampling techniques, methodology, and frequency requirements in paragraph (a)(2) of this section;

(ii) Obtain analytic results in accordance with paragraph (a)(3) of this section; and

(iii) Maintain records of such analytic results in accordance with paragraph (a)(4) of this section.

(2) Sampling requirements.

(i) *Written procedures.* Each establishment shall prepare written specimen collection procedures which shall identify employees designated to collect samples, and shall address location(s) of sampling, how sampling randomness is achieved, and handling of the sample to ensure sample integrity. The written procedure shall be made available to FSIS upon request.

(ii) *Sample collection.* The establishment shall collect random samples from carcasses. Carcasses to be sampled will be selected randomly. Samples shall be collected by taking a whole bird from the end of the chilling process, after the drip line, and rinsing it in an amount of buffer appropriate for the type of bird being tested.[1]

(iii) *Sampling frequency.* Samples will be taken at a frequency proportional to a slaughter establishment's volume of production, at the following rates:

Chickens: 1 sample per 22,000 carcasses
Turkeys: 1 sample per 3,000 carcasses

(iv) *Sampling frequency alternatives.* An establishment operating under a validated HACCP plan in accordance with § 417.2(b) of this chapter may substitute an alternative frequency for the frequency of sampling required under paragraph (a)(2)(iii) of this section if,

(A) The alternative is an integral part of the establishment's verification procedures for its HACCP plan and,

(B) FSIS does not determine, and notify the establishment in writing, that

[1] A copy of FSIS's guideline, ''Sampling Technique for *E. coli* in Raw Meat and Poultry for Process Control Verification,'' is available in the FSIS Docket Room for inspection.

the alternative frequency is inadequate to verify the effectiveness of the establishment's processing controls.

(v) *Sampling in very low volume establishments.*

(A) An establishment annually slaughtering no more than 440,000 chickens, 60,000 turkeys, or a combination of chickens and turkeys not exceeding 60,000 turkeys and 440,000 birds total, shall collect one sample per week starting the first full week of June through August of each year. An establishment slaughtering both chickens and turkeys shall collect samples from the species it slaughters in larger numbers. Weekly samples shall be collected and tested until the establishment has completed and recorded one series of 13 tests that meets the criteria shown in Table 1 of paragraph (a)(5) of this section.

(B) Upon the establishment's meeting the requirements of paragraph (a)(2)(v)(A) of this section, weekly sampling and testing is optional, unless changes are made in establishment facilities, equipment, personnel or procedures that may affect the adequacy of existing process control measures, as determined by the establishment or by FSIS. FSIS determinations that changes have been made requiring resumption of weekly testing shall be provided to the establishment in writing.

(3) *Analysis of samples.* Laboratories may use any quantitative method for analysis of *E. coli* that is sensitive to 5 or fewer cfu/ml of rinse fluid and is approved by the Association of Official Analytic Chemists International [2] or approved by a scientific body in collaborative trials against the three tube Most Probable Number (MPN) method and agreeing with the 95 percent upper and lower confidence limit of the appropriate MPN index.

(4) *Recording of test results.* The establishment shall maintain accurate records of all test results, in terms of cfu/ml of rinse fluid. Results shall be recorded onto a process control chart or table showing at least the most recent 13 test results, by kind of poultry slaughtered, permitting evaluation of the laboratory results in accordance with the criteria set forth in paragraph (a)(5) of this section. Records shall be retained at the establishment for a period of 12 months and shall be made available to FSIS upon request.

(5) *Criteria for Evaluation of test results.* An establishment is operating within the criteria when the most recent *E. coli* test result does not exceed the upper limit (M), and the number of samples, if any, testing positive at levels above (m) is three or fewer out of the most recent 13 samples (n) taken, as follows:

TABLE 1.—EVALUATION OF E. COLI TEST RESULTS

| Slaughter class | Lower limit of marginal range (m) | Upper limit of marginal range (M) | Number of sample tested (n) | Maximum number permitted in marginal range (c) |
|---|---|---|---|---|
| Broilers | 100 cfu/ml | 1,000 cfu/ml | 13 | 3 |
| Turkeys | [a] N.A. | N.A. | N.A. | N.A. |

[a] Not available; values for turkeys will be added upon completion of data collection program for turkeys.

(6) *Failure to meet criteria.* Test results that do not meet the criteria described in paragraph (a)(5) of this section are an indication that the establishment may not be maintaining process controls sufficient to prevent fecal contamination. FSIS shall take further action as appropriate to ensure that all applicable provisions of the law are being met.

(7) *Failure to test and record.* Inspection will be suspended in accordance with rules of practice that will be adopted for such proceeding, upon a finding by FSIS that one or more provisions of paragraphs (a) (1)–(4) of this section have not been complied with and written notice of same has been provided to the establishment.

(b) Pathogen reduction performance standards; *Salmonella.*

(1) *Raw poultry product performance standards for Salmonella.* (i) An establishment's raw poultry products, when sampled and tested by FSIS for *Salmonella* as set forth in this section, may not test positive for *Salmonella* at a rate exceeding the applicable national pathogen reduction performance standard, as provided in Table 2:

TABLE 2.—SALMONELLA PERFORMANCE STANDARDS

| Class of product | Performance Standard (percent positive for *Salmonella*) [a] | Number of samples tested (n) | Maximum number of positives to achieve Standard (c) |
|---|---|---|---|
| Broilers | [b] 20.0% | 51 | 12 |
| Ground chicken | 44.6 | 53 | 26 |
| Ground turkey | 49.9 | 53 | 29 |
| Turkeys | [b] N.A. | N.A. | N.A. |

[a] Performance Standards are FSIS's calculation of the national prevalence of *Salmonella* on the indicated raw products based on data developed by FSIS in its nationwide microbiological baseline data collection programs and surveys. (Copies of Reports on FSIS's Nationwide Microbiological Data Collection Programs and Nationwide Microbiological Surveys used in determining the prevalence of *Salmonella* on raw products are avialable in the FSIS Docket Room.)

[b] Standard is based on partial analysis of baseline survey data; subject to confirmation upon publication of baseline survey report.

[d] Not available; baseline targets for turkeys will be added upon completion of the data collection programs for that product.

[2] A copy of the ''Official Methods of Analysis of the Association of Official Analytical Chemists International,'' 16th edition, 1995, is on file with the Director, Office of the Federal Register, and may be purchased from the Association of Official Analytical Chemists International, Inc., 481 North Frederick Ave., Suite 500, Gaithersburg, MD 20877–2417.

(2) *Enforcement.* FSIS will sample and test raw poultry products in an individual establishment on an unannounced basis to determine prevalence of *Salmonella* in such products to determine compliance with the standard. The frequency and timing of such testing will be based on the establishment's previous test results and other information concerning the establishment's performance. In an establishment producing more than one class of product subject to the pathogen reduction standard, FSIS may sample any or all such classes of products.[3]

(3) *Noncompliance and establishment response.* When FSIS determines that an establishment has not met the performance standard:

(i) The establishment shall take immediate action to meet the standard.

(ii) If the establishment fails to meet the standard on the next series of compliance tests for that product, the establishment shall reassess its HACCP plan for that product.

(iii) Failure by the establishment to act in accordance with paragraph (b)(3)(ii) of this section, or failure to meet the standard on the third consecutive series of FSIS-conducted tests for that product, constitutes failure to maintain sanitary conditions and failure to maintain an adequate HACCP plan, in accordance with part 417 of this chapter, for that product, and will cause FSIS to suspend inspection services. Such suspension will remain in effect until the establishment submits to the FSIS Administrator or his/her designee satisfactory written assurances detailing the action taken to correct the HACCP system and, as appropriate, other measures taken by the establishment to reduce the prevalence of pathogens.

## Subpart Q—Records, Registration, and Reports

15. Section 381.180 is amended by revising paragraph (a) to read as follows:

### § 381.180 Information and reports required from official establishment operators.

(a) The operator of each official establishment shall furnish to Program employees accurate information as to all matters needed by them for making their daily reports of the amount of products prepared or handled in the departments of the establishment to which they are assigned and such reports concerning sanitation, mandatory microbiological testing, and other aspects of the operations of the establishment and the conduct of inspection thereat, as may be required by the Administrator in special cases.

* * * * *

## Subpart T—Imported Poultry Products

16. Section 381.196 is amended by redesignating paragraphs (a)(2)(i) (*a*)–(*g*) as paragraphs (a)(2)(i) (A)–(G), redesignating paragraphs (a)(2)(ii) (*a*)–(*g*) to (a)(2)(ii) (A)–(G), redesignating paragraph (a)(2)(ii)(*h*) as (a)(2)(ii)(I), and by adding a new paragraph (a)(2)(ii)(H) to read as set forth below, and redesignating paragraphs (a)(2)(iv) (*a*)–(*c*) as (a)(2)(iv)(A)–(c).

### § 381.196 Eligibility of foreign countries for importation of products into the United States.

* * * * *

(a) * * *

(2) * * *

(ii) * * *

(H) A Hazard Analysis and Critical Control Point (HACCP) system, as set forth in part 417 of this chapter.

* * * * *

17. A new subchapter E, consisting of Parts 416 and 417 is added to chapter III—Food Safety and Inspection Service, Meat and Poultry Inspection, Department of Agriculture to read as follows:

## SUBCHAPTER E—REGULATORY REQUIREMENTS UNDER THE FEDERAL MEAT INSPECTION ACT AND THE POULTRY PRODUCTS INSPECTION ACT

Part

416 Sanitation
417 Hazard Analysis and Critical Control Point (HACCP) Systems

## SUBCHAPTER E—REGULATORY REQUIREMENTS UNDER THE FEDERAL MEAT INSPECTION ACT AND THE POULTRY PRODUCTS INSPECTION ACT

## PART 416—SANITATION

Sec.

416.11 General rules.
416.12 Development of sanitation SOP's.
416.13 Implementation of SOP's.
416.14 Maintenance of Sanitation SOP's.
416.15 Corrective Actions.
416.16 Recordkeeping Requirements.
416.17 Agency verification.

Authority: 21 U.S.C. 451–470, 601–695; 7 U.S.C. 450, 1901–1906; 7 CFR 2.18, 2.53.

### § 416.11 General rules.

Each official establishment shall develop, implement, and maintain written standard operating procedures for sanitation (Sanitation SOP's) in accordance with the requirements of this part.

### § 416.12 Development of Sanitation SOP's.

(a) The Sanitation SOP's shall describe all procedures an official establishment will conduct daily, before and during operations, sufficient to prevent direct contamination or adulteration of product(s).

(b) The Sanitation SOP's shall be signed and dated by the individual with overall authority on-site or a higher level official of the establishment. This signature shall signify that the establishment will implement the Sanitation SOP's as specified and will maintain the Sanitation SOP's in accordance with the requirements of this part. The Sanitation SOP's shall be signed and dated upon initially implementing the Sanitation SOP's and upon any modification to the Sanitation SOP's.

(c) Procedures in the Sanitation SOP's that are to be conducted prior to operations shall be identified as such, and shall address, at a minimum, the cleaning of food contact surfaces of facilities, equipment, and utensils.

(d) The Sanitation SOP's shall specify the frequency with which each procedure in the Sanitation SOP's is to be conducted and identify the establishment employee(s) responsible for the implementation and maintenance of such procedure(s).

### § 416.13 Implementation of SOP's.

(a) Each official establishment shall conduct the pre-operational procedures in the Sanitation SOP's before the start of operations.

(b) Each official establishment shall conduct all other procedures in the Sanitation SOP's at the frequencies specified.

(c) Each official establishment shall monitor daily the implementation of the procedures in the Sanitation SOP's.

### § 416.14 Maintenance of Sanitation SOP's.

Each official establishment shall routinely evaluate the effectiveness of the Sanitation SOP's and the procedures therein in preventing direct contamination or adulteration of product(s) and shall revise both as necessary to keep them effective and current with respect to changes in facilities, equipment, utensils, operations, or personnel.

### § 416.15 Corrective Actions.

(a) Each official establishment shall take appropriate corrective action(s) when either the establishment or FSIS determines that the establishment's Sanitation SOP's or the procedures specified therein, or the implementation or maintenance of the Sanitation SOP's, may have failed to prevent direct

[3] A copy of FSIS's ''Sample Collection Guidelines and Procedure for Isolation and Identification of *Salmonella* from Raw Meat and Poultry Products'' is available for inspection in the FSIS Docket Room.

contamination or adulteration of product(s).

(b) Corrective actions include procedures to ensure appropriate disposition of product(s) that may be contaminated, restore sanitary conditions, and prevent the recurrence of direct contamination or adulteration of product(s), including appropriate reevaluation and modification of the Sanitation SOP's and the procedures specified therein.

### § 416.16 Recordkeeping requirements.

(a) Each official establishment shall maintain daily records sufficient to document the implementation and monitoring of the Sanitation SOP's and any corrective actions taken. The establishment employee(s) specified in the Sanitation SOP's as being responsible for the implementation and monitoring of the procedure(s) specified in the Sanitation SOP's shall authenticate these records with his or her initials and the date.

(b) Records required by this part may be maintained on computers provided the establishment implements appropriate controls to ensure the integrity of the electronic data.

(c) Records required by this part shall be maintained for at least 6 months and made accesable available to FSIS. All such records shall be maintained at the official establishment for 48 hours following completion, after which they may be maintained off-site provided such records can be made available to FSIS within 24 hours of request.

### § 416.17 Agency verification.

FSIS shall verify the adequacy and effectiveness of the Sanitation SOP's and the procedures specified therein by determining that they meet the requirements of this part. Such verification may include:

(a) Reviewing the Sanitation SOP's;

(b) Reviewing the daily records documenting the implementation of the Sanitation SOP's and the procedures specified therein and any corrective actions taken or required to be taken;

(c) Direct observation of the implementation of the Sanitation SOP's and the procedures specified therein and any corrective actions taken or required to be taken; and

(d) Direct observation or testing to assess the sanitary conditions in the establishment.

## PART 417—HAZARD ANALYSIS AND CRITICAL CONTROL POINT (HACCP) SYSTEMS

Sec.

417.1 Definitions.
417.2 Hazard analysis and HACCP plan.
417.3 Corrective actions.
417.4 Validation, verification, reassessment.
417.5 Records.
417.6 Inadequate HACCP Systems.
417.7 Training.
417.8 Agency verification.

Authority: 7 U.S.C. 450; 21 U.S.C. 451–470, 601–695; 7 U.S.C. 1901–1906; 7 CFR 2.18, 2.53.

### § 417.1 Definitions.

For purposes of this part, the following definitions shall apply:

*Corrective action.* Procedures to be followed when a deviation occurs.

*Critical control point.* A point, step, or procedure in a food process at which control can be applied and, as a result, a food safety hazard can be prevented, eliminated, or reduced to acceptable levels.

*Critical limit.* The maximum or minimum value to which a physical, biological, or chemical hazard must be controlled at a critical control point to prevent, eliminate, or reduce to an acceptable level the occurrence of the identified food safety hazard.

*Food safety hazard.* Any biological, chemical, or physical property that may cause a food to be unsafe for human consumption.

*HACCP System.* The HACCP plan in operation, including the HACCP plan itself.

*Hazard.* SEE *Food Safety Hazard.*

*Preventive measure.* Physical, chemical, or other means that can be used to control an identified food safety hazard.

*Process-monitoring instrument.* An instrument or device used to indicate conditions during processing at a critical control point.

*Responsible establishment official.* The individual with overall authority on-site or a higher level official of the establishment.

### § 417.2 Hazard Analysis and HACCP Plan.

(a) *Hazard analysis.* (1) Every official establishment shall conduct, or have conducted for it, a hazard analysis to determine the food safety hazards reasonably likely to occur in the production process and identify the preventive measures the establishment can apply to control those hazards. The hazard analysis shall include food safety hazards that can occur before, during, and after entry into the establishment. A food safety hazard that is reasonably likely to occur is one for which a prudent establishment would establish controls because it historically has occurred, or because there is a reasonable possibility that it will occur in the particular type of product being processed, in the absence of those controls.

(2) A flow chart describing the steps of each process and product flow in the establishment shall be prepared, and the intended use or consumers of the finished product shall be identified.

(3) Food safety hazards might be expected to arise from the following:

(i) Natural toxins;

(ii) Microbiological contamination;

(iii) Chemical contamination;

(iv) Pesticides;

(v) Drug residues;

(vi) Zoonotic diseases;

(vii) Decomposition;

(viii) Parasites;

(ix) Unapproved use of direct or indirect food or color additives; and

(x) Physical hazards.

(b) *The HACCP plan.* (1) Every establishment shall develop and implement a written HACCP plan covering each product produced by that establishment whenever a hazard analysis reveals one or more food safety hazards that are reasonably likely to occur, based on the hazard analysis conducted in accordance with paragraph (a) of this section, including products in the following processing categories:

(i) Slaughter—all species.

(ii) Raw product—ground.

(iii) Raw product—not ground.

(iv) Thermally processed—commercially sterile.

(v) Not heat treated—shelf stable.

(vi) Heat treated—shelf stable.

(vii) Fully cooked—not shelf stable.

(viii) Heat treated but not fully cooked—not shelf stable.

(ix) Product with secondary inhibitors—not shelf stable.

(2) A single HACCP plan may encompass multiple products within a single processing category identified in this paragraph, if the food safety hazards, critical control points, critical limits, and procedures required to be identified and performed in paragraph (c) of this section are essentially the same, provided that any required features of the plan that are unique to a specific product are clearly delineated in the plan and are observed in practice.

(3) HACCP plans for thermally processed/commercially sterile products do not have to address the food safety hazards associated with microbiological contamination if the product is produced in accordance with the requirements of part 318, subpart G, or part 381, subpart X, of this chapter.

(c) *The contents of the HACCP plan.* The HACCP plan shall, at a minimum:

(1) List the food safety hazards identified in accordance with paragraph (a) of this section, which must be controlled for each process.

(2) List the critical control points for each of the identified food safety hazards, including, as appropriate:

(i) Critical control points designed to control food safety hazards that could be introduced in the establishment, and

(ii) Critical control points designed to control food safety hazards introduced outside the establishment, including food safety hazards that occur before, during, and after entry into the establishment;

(3) List the critical limits that must be met at each of the critical control points. Critical limits shall, at a minimum, be designed to ensure that applicable targets or performance standards established by FSIS, and any other requirement set forth in this chapter pertaining to the specific process or product, are met;

(4) List the procedures, and the frequency with which those procedures will be performed, that will be used to monitor each of the critical control points to ensure compliance with the critical limits;

(5) Include all corrective actions that have been developed in accordance with § 417.3(a) of this part, to be followed in response to any deviation from a critical limit at a critical control point; and

(6) Provide for a recordkeeping system that documents the monitoring of the critical control points. The records shall contain the actual values and observations obtained during monitoring.

(7) List the verification procedures, and the frequency with which those procedures will be performed, that the establishment will use in accordance with § 417.4 of this part.

(d) *Signing and dating the HACCP plan.* (1) The HACCP plan shall be signed and dated by the responsible establishment individual. This signature shall signify that the establishment accepts and will implement the HACCP plan.

(2) The HACCP plan shall be dated and signed:

(i) Upon initial acceptance;

(ii) Upon any modification; and

(iii) At least annually, upon reassessment, as required under § 417.4(a)(3) of this part.

(e) Pursuant to 21 U.S.C. 608 and 621, the failure of an establishment to develop and implement a HACCP plan that complies with this section, or to operate in accordance with the requirements of this part, may render the products produced under those conditions adulterated.

**§ 417.3 Corrective actions.**

(a) The written HACCP plan shall identify the corrective action to be followed in response to a deviation from a critical limit. The HACCP plan shall describe the corrective action to be taken, and assign responsibility for taking corrective action, to ensure:

(1) The cause of the deviation is identified and eliminated;

(2) The CCP will be under control after the corrective action is taken;

(3) Measures to prevent recurrence are established; and

(4) No product that is injurious to health or otherwise adulterated as a result of the deviation enters commerce.

(b) If a deviation not covered by a specified corrective action occurs, or if another unforeseen hazard arises, the establishment shall:

(1) Segregate and hold the affected product, at least until the requirements of paragraphs (b)(2) and (b)(3) of this section are met;

(2) Perform a review to determine the acceptability of the affected product for distribution;

(3) Take action, when necessary, with respect to the affected product to ensure that no product that is injurious to health or otherwise adulterated, as a result of the deviation, enters commerce;

(4) Perform or obtain reassessment by an individual trained in accordance with § 417.7 of this part, to determine whether the newly identified deviation or other unforeseen hazard should be incorporated into the HACCP plan.

(c) All corrective actions taken in accordance with this section shall be documented in records that are subject to verification in accordance with § 417.4(a)(2)(iii) and the recordkeeping requirements of § 417.5 of this part.

**§ 417.4 Validation, Verification, Reassessment.**

(a) Every establishment shall validate the HACCP plan's adequacy in controlling the food safety hazards identified during the hazard analysis, and shall verify that the plan is being effectively implemented.

(1) *Initial validation.* Upon completion of the hazard analysis and development of the HACCP plan, the establishment shall conduct activities designed to determine that the HACCP plan is functioning as intended. During this HACCP plan validation period, the establishment shall repeatedly test the adequacy of the CCP's, critical limits, monitoring and recordkeeping procedures, and corrective actions set forth in the HACCP plan. Validation also encompasses reviews of the records themselves, routinely generated by the HACCP system, in the context of other validation activities.

(2) *Ongoing verification activities.* Ongoing verification activities include, but are not limited to:

(i) The calibration of process-monitoring instruments;

(ii) Direct observations of monitoring activities and corrective actions; and

(iii) The review of records generated and maintained in accordance with § 417.5(a)(3) of this part.

(3) *Reassessment of the HACCP plan.* Every establishment shall reassess the adequacy of the HACCP plan at least annually and whenever any changes occur that could affect the hazard analysis or alter the HACCP plan. Such changes may include, but are not limited to, changes in: raw materials or source of raw materials; product formulation; slaughter or processing methods or systems; production volume; personnel; packaging; finished product distribution systems; or, the intended use or consumers of the finished product. The reassessment shall be performed by an individual trained in accordance with § 417.7 of this part. The HACCP plan shall be modified immediately whenever a reassessment reveals that the plan no longer meets the requirements of § 417.2(c) of this part.

(b) *Reassessment of the hazard analysis.* Any establishment that does not have a HACCP plan because a hazard analysis has revealed no food safety hazards that are reasonably likely to occur shall reassess the adequacy of the hazard analysis whenever a change occurs that could reasonably affect whether a food safety hazard exists. Such changes may include, but are not limited to, changes in: raw materials or source of raw materials; product formulation; slaughter or processing methods or systems; production volume; packaging; finished product distribution systems; or, the intended use or consumers of the finished product.

**§ 417.5 Records.**

(a) The establishment shall maintain the following records documenting the establishment's HACCP plan:

(1) The written hazard analysis prescribed in § 417.2(a) of this part, including all supporting documentation;

(2) The written HACCP plan, including decisionmaking documents associated with the selection and development of CCP's and critical limits, and documents supporting both the monitoring and verification procedures selected and the frequency of those procedures.

(3) Records documenting the monitoring of CCP's and their critical limits, including the recording of actual

times, temperatures, or other quantifiable values, as prescribed in the establishment's HACCP plan; the calibration of process-monitoring instruments; corrective actions, including all actions taken in response to a deviation; verification procedures and results; product code(s), product name or identity, or slaughter production lot. Each of these records shall include the date the record was made.

(b) Each entry on a record maintained under the HACCP plan shall be made at the time the specific event occurs and include the date and time recorded, and shall be signed or initialed by the establishment employee making the entry.

(c) Prior to shipping product, the establishment shall review the records associated with the production of that product, documented in accordance with this section, to ensure completeness, including the determination that all critical limits were met and, if appropriate, corrective actions were taken, including the proper disposition of product. Where practicable, this review shall be conducted, dated, and signed by an individual who did not produce the record(s), preferably by someone trained in accordance with § 417.7 of this part, or the responsible establishment official.

(d) *Records maintained on computers*. The use of records maintained on computers is acceptable, provided that appropriate controls are implemented to ensure the integrity of the electronic data and signatures.

(e) *Record retention*. (1) Establishments shall retain all records required by paragraph (a)(3) of this section as follows: for slaughter activities for at least one year; for refrigerated product, for at least one year; for frozen, preserved, or shelf-stable products, for at least two years.

(2) Off-site storage of records required by paragraph (a)(3) of this section is permitted after six months, if such records can be retrieved and provided, on-site, within 24 hours of an FSIS employee's request.

(f) *Official review*. All records required by this part and all plans and procedures required by this part shall be available for official review and copying.

**§ 417.6 Inadequate HACCP Systems.**

A HACCP system may be found to be inadequate if:

(a) The HACCP plan in operation does not meet the requirements set forth in this part;

(b) Establishment personnel are not performing tasks specified in the HACCP plan;

(c) The establishment fails to take corrective actions, as required by § 417.3 of this part;

(d) HACCP records are not being maintained as required in § 417.5 of this part; or

(e) Adulterated product is produced or shipped.

**§ 417.7 Training.**

(a) Only an individual who has met the requirements of paragraph (b) of this section, but who need not be an employee of the establishment, shall be permitted to perform the following functions:

(1) Development of the HACCP plan, in accordance with § 417.2(b) of this part, which could include adapting a generic model that is appropriate for the specific product; and

(2) Reassessment and modification of the HACCP plan, in accordance with § 417.3 of this part.

(b) The individual performing the functions listed in paragraph (a) of this section shall have successfully completed a course of instruction in the application of the seven HACCP principles to meat or poultry product processing, including a segment on the development of a HACCP plan for a specific product and on record review.

**§ 417.8 Agency verification.**

FSIS will verify the adequacy of the HACCP plan(s) by determining that each HACCP plan meets the requirements of this part and all other applicable regulations. Such verification may include:

(a) Reviewing the HACCP plan;

(b) Reviewing the CCP records;

(c) Reviewing and determining the adequacy of corrective actions taken when a deviation occurs;

(d) Reviewing the critical limits;

(e) Reviewing other records pertaining to the HACCP plan or system;

(f) Direct observation or measurement at a CCP;

(g) Sample collection and analysis to determine the product meets all safety standards; and

(h) On-site observations and record review.

Done at Washington, DC, on: July 5, 1996.

Michael R. Taylor,

*Acting Under Secretary for Food Safety.*

The following are appendices to the preamble of the Final Rule.

Note: The following appendices will not appear in the Code of Federal Regulations.

Appendix A—Guidelines for Developing a Standard Operating Procedure for Sanitation (Sanitation SOP's) in Federally Inspected Meat and Poultry Establishments

I. Introduction

Foodborne illness is a significant public health problem in the United States. While data on illness associated with meat and poultry products are limited, data from various sources suggest that foodborne microbial pathogens may cause up to 7 million cases of illness each year, and 7,000 deaths. Of these, nearly 5 million cases of illness and more than 4,000 deaths may be associated with meat and poultry products.

FSIS is pursuing a broad and long-term science-based strategy to improve the safety of meat and poultry products to better protect public health. FSIS is undertaking steps to improve the safety of meat and poultry throughout the food production, processing, distribution, and marketing chain. The Agency's goal is to reduce the risk to public health of consuming meat and poultry products by reducing pathogenic microbial contamination. The FSIS strategy relies heavily on building the principle of prevention into production processes.

Sections 308.7, 381.57 and 381.58 of the Meat and Poultry Inspection Regulations require that rooms, compartments, equipment, and utensils used for processing or handling meat or poultry in a federally inspected establishment must be kept clean and in a sanitary condition. Establishments are responsible for sanitation of facilities, equipment and utensils.

Sanitation maintains or restores a state of cleanliness, and promotes hygiene for the prevention of foodborne illness. Sanitation encompasses many areas and functions of an establishment, even when not in production. However, there are certain sanitary procedures that must be addressed and maintained on a daily basis to prevent direct product contamination or adulteration. Good sanitation is essential in these areas to maintaining a safe food production process.

FSIS is requiring meat and poultry establishments to develop and implement a written Standard Operating Procedure for sanitation (Sanitation SOP's) which addresses these areas. An establishment's adherence to its written Sanitation SOP will demonstrate knowledge of and commitment to sanitation and production of safe meat and poultry products.

New part 416 to the Meat and Poultry Inspection Regulations requires that a written Sanitation SOP contain

established procedures to be followed routinely to maintain a sanitary environment for producing safe and unadulterated food products. Plant management must develop a Sanitation SOP that describes daily sanitation procedures to be performed by the establishment. A designated establishment employee(s) must monitor the Sanitation SOP and document adherence to the SOP and any corrective actions taken to prevent direct product contamination or adulteration. This written documentation must be available to FSIS program employees.

These FSIS guidelines should help federally inspected meat or poultry establishments develop, implement and monitor written Sanitation SOPs.

The Sanitation SOP developed by the establishment must detail daily sanitation procedures it will use before (pre-operational sanitation) and during (operational sanitation) operation to prevent direct product contamination or adulteration. FSIS program employees will verify an establishment's adherence to its Sanitation SOP and will take appropriate action when there is noncompliance.

These guidelines, where applicable, are for:

- Livestock Slaughter and/or Processing Establishments
- Poultry Slaughter and/or Processing Establishments
- Import Inspection Establishments
- Identification Warehouses

The establishment should update the Sanitation SOP to reflect changes in equipment and facilities, processes, new technology, or designated establishment employees.

II. Pre-operational Sanitation

Established procedures of pre-operational sanitation must result in clean facilities, equipment and utensils prior to starting production. Clean facilities, equipment, and utensils are free of any soil, tissue debris, chemical or other injurious substance that could contaminate a meat or poultry food product. Pre-operational sanitation established procedures shall describe the daily, routine sanitary procedures to prevent direct product contamination or adulteration. The sanitary procedures must include the cleaning of product contact surfaces of facilities, equipment and utensils to prevent direct product contamination or adulteration. The following additional sanitary procedures for pre-operational sanitation might include:

- Descriptions of equipment disassembly, reassembly after cleaning, use of acceptable chemicals according to label directions, and cleaning techniques.
- The application of sanitizers to product contact surfaces after cleaning. Sanitizers are used to reduce or destroy bacteria that may have survived the cleaning process.

III. Operational Sanitation

All federally inspected establishments must describe daily, routine sanitary procedures that the establishment will conduct during operations to prevent direct product contamination or adulteration. Established procedures for operational sanitation must result in a sanitary environment for preparing, storing, or handling any meat or poultry food product in accordance with sections 308/381 of the Meat and Poultry Inspection Regulations. Established procedures during operations might include, where applicable:

- Equipment and utensil cleaning—sanitizing—disinfecting during production, as appropriate, at breaks, between shifts, and at midshift cleanup.
- Employee hygiene: includes personal hygiene, cleanliness of outer garments and gloves, hair restraints, hand washing, health, etc.
- Product handling in raw and in cooked product areas.

The established sanitary procedures for operational sanitation will vary with the establishment. Establishments with complex processing need additional sanitary procedures to ensure a sanitary environment and to prevent cross contamination. Establishments that do not slaughter or process (such as an Import Inspection facility) should develop established sanitary procedures specific to that facility.

IV. Implementing and Monitoring of the Sanitation SOP

The Sanitation SOP shall identify establishment employee(s) (positions rather than specific names of employees) responsible for the implementation and maintenance of the Sanitation SOP. Employee(s) are to be identified to monitor and evaluate the effectiveness of the Sanitation SOP and make corrections when needed. The evaluation can be performed by using one or more of the following methods: (1) organoleptic (sensory—e.g., sight, feel, smell); (2) chemical (e.g., checking the chlorine level); (3) microbiological (e.g., microbial swabbing and culturing of product contact surfaces of equipment or utensils).

Establishments might specify the method, frequency, and recordkeeping processes associated with monitoring. Pre-operational sanitation monitoring should, at a minimum, evaluate and document the effective cleaning of all direct product contact facilities, equipment, and/or utensils that are to be used at the start of production. Operational sanitation monitoring should, at a minimum, document adherence to the SOP, including actions that identify and correct instances or circumstances of direct product contamination which occur from environmental sources (facilities, equipment, pests, etc.) or employee practices (personal hygiene, product handling, etc.). All establishment records of pre-operational and operational sanitation monitoring, including corrective actions to prevent direct product contamination or adulteration, must be maintained by the establishment for at least six months, and be made available to FSIS program employees. After 48 hours, they may be maintained off-site.

V. Corrective Actions

When deviations occur from the established sanitary procedures within the Sanitation SOP, the establishment must take corrective actions to prevent direct product contamination or adulteration. Instructions should be provided to employees and management officials for documenting corrective actions. The actions must be recorded.

Appendix B—Model of a Standard Operating Procedure for Sanitation

Hill-Top Meats has prepared a written Standard Operating Procedure (SOP) for Sanitation. Let's look at the Sanitation SOP and discuss its attributes (guidance and advice are inside the boxes).

Hill-Top Meats, Est. 38, Anytown, U.S.A. is a slaughter and medium processing establishment. This plant receives live cattle for slaughter and dressing and processes the carcasses into chubs of ground beef, roast beef, and ready to eat beef products.

> This introductory information is not a regulatory requirement but identifies the type of establishment and its production. The information will help FSIS personnel, who are not familiar with the establishment, review the Sanitation SOP.

Management structure is as follows:

President—Joe Doe
Slaughter Manager—Ken Smith
Processing Manager—Susan Jones
Quality Control (QC) Manager—Gwen Summers
Sanitation Manager—Carl Anderson

The QC Manager is responsible for implementing and daily monitoring of the Sanitation SOP and recording the findings and any corrective actions. The

Slaughter, Processing and Sanitation Managers are responsible for training and assigning specific duties to other employees and monitoring their performance within the Sanitation SOP.

All records, data, checklists and other information pertaining to the Sanitation SOP will be maintained on file and made available to FSIS program employees.

> The identification of establishment personnel (positions rather than specific names of employees) responsible for implementing, maintaining, monitoring and records associated with the Sanitation SOP is a regulatory requirement. All records pertaining to the Sanitation SOP must be kept on file and made available to FSIS personnel, but it is not necessary to make that statement.

Sanitation SOP for EST. 38

*I. Preoperational Sanitation—Equipment and Facility Cleaning Objective*

All equipment will be cleaned and sanitized prior to starting production.

A. General Equipment Cleaning. (Simple equipment and hand tools are cleaned and sanitized in the same manner but they do not require disassembly and reassembly.)

1. Established Sanitary Procedures for Cleaning and Sanitizing Equipment:

a. The equipment is disassembled. Parts are placed in the designated tubs, racks, etc.

b. Product debris is removed.

c. Equipment parts are rinsed with water to remove remaining debris.

d. An approved cleaner is applied to parts and they are cleaned according to manufacturers' directions.

e. Equipment parts are rinsed with potable water.

f. Equipment is sanitized with an approved sanitizer, and rinsed with potable water if required.

g. The equipment is reassembled.

h. The equipment is resanitized with an approved sanitizer, and rinsed with potable water if required.

> The established sanitary procedures are daily routine sanitary procedures to prevent direct product contamination or adulteration. Daily routine sanitary procedures to prevent direct product contamination or adulteration are required in the Sanitation SOP; FSIS personnel use them to verify compliance with the Sanitation SOP. The procedures shall be specific for each establishment; however, they can be as detailed as the establishment wants to make them.

2. Implementing, Monitoring and Recordkeeping. The QC Manager performs daily organoleptic sanitation inspection after preoperational equipment cleaning and sanitizing. The results of the inspection are recorded on Establishment Form E–1. If everything is acceptable, the appropriate box is initialed. If corrective actions are needed, such actions are to be documented (see below).

The QC Manager performs daily microbial monitoring for Total Plate Counts (TPCs) after preoperational equipment cleaning and sanitizing. The QC Manager swabs one square inch of a food contact surface on a piece of equipment or hand tool within one hour prior to production. The samples are plated and incubated at 35° C. for 48 hours. Colonies are counted and recorded as number of colony forming units (CFU) per square inch of surface swabbed. Daily microbial counts are documented on Establishment Form M–1.

3. Corrective Actions.

a. When the QC Manager determines that the equipment or hand tools do not pass organoleptic examination, the cleaning procedure and reinspection are repeated. The Sanitation Manager monitors the cleaning of the equipment or hand tools and retrains sanitation crew employees, if necessary. Corrective actions are recorded on Establishment Form E–1.

b. If microbial counts exceed ____ CFUs/sq. in., the QC Manager notifies the Sanitation Manager and attempts to determine the cause of the high count (for example, cleaning procedures varied, new people cleaned the equipment, sanitizer not applied). If microbial counts remain high for several days, the QC Manager will confer with the Sanitation Manager. The Sanitation Manager notifies sanitation crew employees and reviews all cleaning and sanitizing procedures and personal hygiene. Microbial counts are recorded on Establishment Form M–1. Corrective actions to prevent direct product contamination or adulteration are documented on Establishment Form E–1.

> The establishment is required to monitor daily routine sanitation activities as described in the Sanitation SOP, the establishment determines the methods and frequency of monitoring. Microbiological sampling is not required, but Hill-Top Meats wants to monitor the effectiveness of the cleaning by daily microbial sampling, in addition to organoleptic monitoring, and has set limits to enable them to take appropriate action when those limits are exceeded. Establishment Forms E–1 and M–1 are used only as examples; no specific forms or form numbers are required. However, establishments must record the daily completion or adherence to the established procedures in the Sanitation SOP, any deviations from regulatory requirements, and corrective actions.

B. Cleaning of Facilities—including floors, walls and ceilings.

1. Cleaning Procedures.

a. Debris is swept up and discarded.

b. Facilities are rinsed with potable water.

c. Facilities are cleaned with an approved cleaner, according to manufacturer's directions.

d. Facilities are rinsed with potable water.

2. Cleaning Frequency.

Floors and walls are cleaned at the end of each production day. Ceilings are cleaned as needed, but at least once a week.

> There is no specific requirement to include facility cleaning in the Sanitation SOP, unless part of the facility could directly contaminate or adulterate product.

3. Establishment Monitoring.

The QC Manager performs daily organoleptic inspection prior to the start of operations. Results are recorded on Establishment Form E–1.

4. Corrective Actions.

When the QC Manager determines that the facilities do not pass organoleptic inspection, the cleaning procedure and reinspection are repeated. The Sanitation Manager monitors the cleaning of facilities and retrains sanitation crew employees if necessary. Corrective actions to prevent direct product contamination or adulteration are recorded on Establishment Form E–1.

*II. Operational Sanitation*

*Objective:* Carcass dressing will be performed under sanitary conditions and in a manner to prevent contamination of the carcass.

A. Slaughter Operations.

1. Established Methods for Carcass Dressing—

a. Employees will clean hands, arms, gloves, aprons, boots, etc., as often as

necessary during the dressing procedures.

b. Employees will clean and then sanitize with 180° F. water, knives and other hand tools, saws and other equipment, as often as necessary during the dressing procedures to prevent contamination of the skinned carcass.

c. The brisket saw is sanitized between carcasses using 180° F. water.

d. Eviscerating employees will maintain clean hands, arms, clothes, aprons, boots and knives during the evisceration process. If contamination occurs, the employee is required to step away from the evisceration table onto a side platform to clean and sanitize apron, boots and knives. It may be necessary to clean hands and arms with soap and water. In cases of contamination from an abscess or other extensive contamination, the employee may need to shower and change clothes before resuming work.

e. The carcass splitting saw is sanitized with 180° F. water after each carcass.

The above methods for carcass dressing are specific for Hill-Top Meats. The establishment considers them to be Good Manufacturing Practices for their type of operation, to prevent direct contamination or adulteration of carcasses. Each establishment determines the sanitary procedures and any requirements they want to detail in their Sanitation SOP.

2. Monitoring and Recordkeeping.

a. The Slaughter Manager is responsible for ensuring that employee hygiene practices, sanitary conditions and cleaning procedures are maintained during a production shift. The QC Manager monitors the sanitation procedures twice during a production shift. Results are recorded on Establishment Form E–1.

b. A Microbiological Control and Monitoring Program is used to determine the level of bacteria on product contact surfaces of equipment (e.g., knives, hand tools, evisceration table, etc.) and outer garments (such as aprons and gloves) during production. The QC Manager performs daily microbial monitoring for Total Plate Counts (TPCs). The samples are plated and incubated at 35°C. for 48 hours. Colonies are counted and recorded as number of colony forming units (CFU) per square inch of surface swabbed. Daily microbial counts are documented on Establishment Form M–1.

3. Corrective Actions.

a. When equipment is visibly contaminated, contaminants are removed by cleaning and sanitizing equipment prior to resuming production. The Slaughter Manager attempts to determine the cause of the contamination and takes corrective action. This may require adjusting equipment, retraining employees, temporarily stopping or slowing the line speed, etc. Corrective actions are recorded on Establishment Form E–1.

b. If microbial counts from equipment swabbing exceed the action level set, the QC Manager notifies the Slaughter Manager. The Slaughter Manager attempts to determine the cause (for example, new people not adequately trained, equipment not adjusted properly) and takes corrective action. If microbial counts remain above established limits for several days, the QC Manager confers with the Slaughter Manager and all slaughter operations are reviewed. The Slaughter Manager notifies the slaughter employees and reviews personal hygiene, equipment adjustment, and sanitary handling procedures. Corrective actions to prevent direct product contamination or adulteration are recorded on Establishment Form E–1.

The establishment is required to monitor the regulatory daily sanitation activities as described in its Sanitation SOP, but each establishment determines its own methods for monitoring, the frequency of monitoring, and the corrective actions to include in the Sanitation SOP. Records must be kept on daily completion of the established procedures, deviations, and corrective actions.

B. Processing Operations.

*Objective:* Processing is performed under sanitary conditions to prevent direct and cross contamination of food products.

1. Established Sanitary Procedures for Processing—

a. Employees clean and sanitize hands, gloves, knives, wizard knives, other hand tools, cutting boards, etc., as necessary during processing to prevent contamination of food products.

b. All equipment, belt conveyors, tables, and other product contact surfaces are cleaned and sanitized throughout the day as needed.

c. Employees take appropriate precautions when going from a raw product area to a cooked product area, to prevent cross contamination of cooked products. Employees change outer garments, wash hands and sanitize hands with an approved hand sanitizer (sanitizer is equivalent to 50 ppm chlorine), put on clean gloves for that room and step into a boot sanitizing bath on leaving and entering the respective rooms.

d. Raw and cooked processing areas are separate. There is no cross utilization of equipment between raw and cooked products.

e. Outer garments, such as aprons, smocks and gloves, are identified and designated specifically for either the raw processing rooms or the cooked processing rooms. Blue is designated for raw processing rooms and orange for cooked processing rooms. The outer garments are hung in designated locations when an employee leaves each room. Outer garments are maintained in a clean and sanitary manner and are changed at least daily and, if necessary, more often.

Establishments with processing will determine their own established sanitary procedures in the Sanitation SOP and any establishment requirements. Hill-Top Meats considers its established procedures for processing to be Good Manufacturing Practices.

2. Monitoring and Recordkeeping.

a. The Processing Manager is responsible for ensuring that employee hygiene practices, employee and product traffic patterns, sanitary product handling procedures, and cleaning procedures are maintained during a production shift. The QC Manager monitors the sanitation procedures twice during a production shift. Results are recorded on Establishment Form P–1.

b. A Microbiological Control and Monitoring Program is used to determine and control the level of bacteria on both raw and cooked product contact surfaces during production. Once a day, the QC Manager performs Microbial Monitoring for Total Plate Counts (TPCs). The QC Manager swabs one square inch on a product contact surface from each of three randomly selected pieces of equipment in each raw product room and cooked product room.

Note: The samples are taken from the *cooked product rooms first* and then from the raw product rooms. The samples are plated and incubated at 35° C. for 48 hours. Colonies are counted and recorded as number of colony forming units (CFU) per square inch of surface swabbed. Microbial counts are documented on Establishment Form M–1.

3. Corrective Actions.

a. When the QC Manager identifies sanitation problems, the QC Manager notifies the Processing Manager. The Processing Manager stops production, if necessary, and notifies processing employees to take appropriate action to correct the sanitation problems. If necessary, processing employees are retrained. Corrective actions are recorded on Establishment Form P–1.

If microbial counts exceed the action level set for each piece of equipment for the specific product in that production line, the QC Manager notifies the Processing Manager. The Processing Manager attempts to determine the cause (for example, new people going back and forth between the raw and cooked rooms, gloves not being changed regularly) and takes corrective action. Additional daily microbial sampling is done on any equipment that showed high microbial counts, until the counts fall below the action level. If microbial counts remain high for several days, the QC Manager confers with the Processing Manager and Sanitation Manager to review all operations that impact that equipment. The Processing Manager notifies the processing employees and reviews personal hygiene and sanitary product handling procedures. Corrective actions are recorded on Establishment Form P–1.

The monitoring and corrective actions are specific for Hill-Top Meats only. Microbial sampling and monitoring are not required for product contact surfaces. Each establishment determines its own procedures for monitoring and the frequency of monitoring to include in its Sanitation SOP.

## Appendix C—Guidebook for the Preparation of HACCP Plans

### *Preface*

The Hazard Analysis Critical Control Points (HACCP) system is a logical, scientific system that can control safety problems in food production. HACCP is now being adopted worldwide. It works with any type of food production system and with any food. It works by controlling food safety hazards throughout the process. The hazards can be biological, chemical, or physical.

This guidebook was developed to help meat and poultry establishments prepare HACCP plans. The steps to developing a HACCP plan can be used by all establishments, large or small, complex or simple. The guidebook identifies additional sources of information, so that small operators won't have to ''go it alone.''

The forms shown in this guidebook are examples only. Think of this as a self-help guide or a do-it-yourself manual. There are many ways to get to the final product—a good HACCP plan. So, choose the examples that work best in your establishment.

The guidebook can be used to complement HACCP training. You may also wish to use it in conjunction with a video about HACCP. The guidebook will provide the basics. When you are ready to move on, there are more specialized documents. FSIS is also publishing the *Meat and Poultry Products Hazards and Controls Guide*. It explains in detail the biological, chemical, and physical hazards that can occur at different steps of meat and poultry slaughter and processing and provides some examples of controls for those hazards. In addition, there will be a series of Generic Models for different meat and poultry processes, to be used as examples. You will probably want to look at the models for processes that you use in your establishment. There will be model plans for the following 13 processes:

*Raw, Ground*
*Raw, Other*
*All Other Shelf-Stable, Heat Treated*
*Fully Cooked, Non-Shelf Stable*
*All Other Shelf-Stable, Not Heat Treated*
*All Non-Shelf Stable, Heat Treated, Not Fully Cooked*
*Non-Shelf Stable with Secondary Inhibitors*
*Thermally Processed/Commercially Sterile*
*Swine Slaughter*
*Poultry Slaughter*
*Beef Slaughter*
*Irradiation*
*Mechanically Separated Species*

### *Developing a HACCP Plan*

The Hazard Analysis and Critical Control Points (HACCP) System is a logical, scientific approach to controlling safety problems in food production. When a company adopts HACCP, it puts controls in place at each point in the production system where safety problems could occur from biological, chemical, or physical hazards. To start a HACCP system, a company must first write a HACCP plan. This guidebook explains how to write a HACCP plan in five preparatory steps and then the seven HACCP principles.

The five ''pre-HACCP'' steps in this guidebook are:

1. Bring together your HACCP resources.
2. Describe the product and its method of distribution.
3. Develop a complete list of ingredients and raw materials used in the product.
4. Develop a process flow diagram.
5. Meet the regulatory requirements for Sanitation Standard Operating Procedures (SOPs).

Applying the seven HACCP principles makes up the major steps to writing a HACCP plan. They are:

1. Conduct a hazard analysis.
2. Identify critical control points.
3. Establish critical limits for each critical control point.
4. Establish monitoring procedures.
5. Establish corrective actions.
6. Establish recordkeeping procedures.
7. Establish verification procedures.

As you read this guidebook and look at the examples, the process for writing a HACCP plan should become clearer. This first section of the guidebook explains the five ''pre-HACCP'' steps. The next seven sections cover each of the HACCP principles that you will need to follow to develop a HACCP plan.

### *Pre-HACCP Step 1—Bring Together Your HACCP Resources*

The first step is to assemble your HACCP resources. When a company develops a HACCP plan, it is important to bring as much knowledge to the table as possible. Actually, you probably have access to more HACCP resources than you think! With a small establishment, this might mean bringing together one or two employees, one of whom has had HACCP training. Your HACCP resources may include outside expertise. You can get this expertise through your local Extension Office, a trade or professional association, or a contractor of your choice. A larger plant may wish to bring in employees from a number of departments, such as production, sanitation, quality control, and engineering, as well as employees directly involved in daily processing activities. There is no magic number of employees needed to write a HACCP plan. It could be one employee or, in a very large company, it could be seven or eight people.

Your employee or employees writing the HACCP plan should understand some basic things about your establishment: The technology and equipment used in your processing lines; the practical aspects of food operations; and the flow of the process in your plant. It will be a bonus for your HACCP plan if those employees have some knowledge of the applied aspects of food microbiology and of HACCP principles and techniques, although this knowledge can be supplemented by outside experts.

### *Pre-HACCP Step 2—Describe the Product and Its Method of Distribution*

The second step is to describe completely each food product that your plant makes. This will help identify hazards that may exist either in the ingredients or in the packaging materials.

To describe your product, you might ask the following questions about the product:

1. Common name?

For example, a cooked sausage could be called franks/hot dogs/wieners.

2. How is it to be used?

Categories might include: Ready-to-eat, to be heated prior to consumption, or for further processing.

3. The type of package?

For example, is it modified atmosphere packaging?

4. Length of shelf life?

In the cooked sausage example, the length of shelf life might be 30 to 50 days for modified atmospheric packaging.

5. Where will it be sold?

For example, will it be sold to wholesale, retail or institutions?

6. Labeling instructions?

''Keep Refrigerated'' would be a common labeling instruction for meat and poultry products.

7. Is special distribution control needed?

For instance, should the product be kept refrigerated at or below 40°F? Below is a blank Product Description Form. It is an example. You may take it and tailor it to your own establishment.

Below is an example of a Product Description Form filled in for cooked sausage. The HACCP Generic Models developed for 13 different processes will give you more samples of product descriptions.

*Pre-HACCP Step 3—Develop a Complete List of Ingredients and Raw Materials*

The third step is to develop a written list of ingredients and raw materials for each process/product. You can write this on a very simple form, as shown below. You may wish to divide the ingredients into just two categories: Meat (meat such as boneless beef or chicken parts with skin) and Other Ingredients (such as spices and preservatives). Below is a sample Product and Ingredients Form for chunked and formed, breaded chicken patties. Again, these forms are only examples to get you started. You may wish to have more elaborate forms for your establishment. The important thing is to list all ingredients that go into each product!

*Pre-HACCP Step 4—Develop a Process Flow Diagram*

The next step is to construct a process flow diagram that identifies all the steps used to prepare the product, from receiving through final shipment. The diagram should not be so complex that it is difficult to follow and understand, but must be complete from the beginning of your process to the end.

You will want to verify the process flow diagram. You do this by actually walking through the plant to make sure that the steps listed on the diagram describe what really occurs in producing the product.

A blank process flow diagram is shown below. It is a very simple form on which you may want to draw the flow freehand. If you have a computer, you can make a fancier form, with arrows leading from step to step.

BILLING CODE 3410–DM–P

**PRODUCT(S) DESCRIPTION**

**PRODUCT:**

**THE FOLLOWING QUESTIONS NEED TO BE ANSWERED WHEN DEVELOPING THE PRODUCT DESCRIPTION:**

1. **COMMON NAME?**

2. **HOW IS IT TO BE USED?**

3. **TYPE OF PACKAGE?**

4. **LENGTH OF SHELF LIFE, AT WHAT TEMPERATURE?**

5. **WHERE WILL IT BE SOLD?**

6. **LABELING INSTRUCTIONS?**

7. **IS SPECIAL DISTRIBUTION CONTROL NEEDED?**

**DATE:**_____ **APPROVED BY:**_____

**PRODUCT(S) DESCRIPTION**

**PRODUCT:** Cooked sausage

**THE FOLLOWING QUESTIONS NEED TO BE ANSWERED WHEN DEVELOPING THE PRODUCT DESCRIPTION:**

| | | |
|---|---|---|
| 1. | COMMON NAME? | Franks, Hot dogs, Wieners |
| 2. | HOW IS IT TO BE USED? | Heat and eat, Ready-to-eat |
| 3. | TYPE OF PACKAGE? | Atmospheric packed, Vacuum packed; Modified Atmospheric packed |
| 4. | LENGTH OF SHELF LIFE, AT WHAT TEMPERATURE? | Atmospheric - 12 to 20 days, Vacuum - 30-60 days, Modified atmosphere - 30-50 days |
| 5. | WHERE WILL IT BE SOLD? | Retail; HRI |
| 6. | LABELING INSTRUCTIONS? | Keep Refrigered, Fully Cooked Code Date |
| 7. | IS SPECIAL DISTRIBUTION CONTROL NEEDED? | Keep Refrigerated at or below 40°F. |

**DATE:** April 15, 1996 **APPROVED BY:** J. M. MacIntosh

**PRODUCT AND INGREDIENTS**

**PRODUCT:**

DATE: _____ APPROVED BY: _____

**PRODUCT AND INGREDIENTS**

**PRODUCT:** CHUNKED AND FORMED, BREADED CHICKEN PATTIE

MEAT

CHICKEN

OTHER INGREDIENTS

SPICES
PHOSPHATES
BROTH
SALT
BREADING

**DATE:** June 21, 1996 **APPROVED BY:** Jean Dumouchel

An example of a Process Flow Diagram for cooked sausage is shown below. The employees in this case chose to construct a flow diagram for the meat and poultry ingredients, another one for the non-meat ingredients, and a third flow diagram for supplies such as packaging materials. You will find more examples of process flow diagrams for specific products in the HACCP Generic Models.

Remember, the purpose of this diagram is to find any places in your specific establishment where hazards could occur. As with all HACCP planning forms, the approving employee should sign and date the form, for your records.

*Pre-HACCP Step 5—Meet the Regulatory Requirements for Sanitation Standard Operating Procedures*

Good sanitation is one of the most basic ways to ensure that you produce safe products. Maintaining good sanitation serves as an excellent and necessary foundation for building your HACCP plan. It also demonstrates that you have the commitment and resources to successfully implement your HACCP plan. Because it is so important, meeting the regulatory requirements for Sanitation Standard Operating Procedures (SOPs) is a pre-HACCP requirement that must be carried out in all establishments. A separate guide and a model Sanitation SOP have been prepared and are available to help you with this activity.

Now you are ready to apply the seven principles that will produce a HACCP plan suited to your plant and your products. Those principles and how to carry them out will be discussed in detail in the next seven sections of this guidebook.

**PROCESS FLOW DIAGRAM**

**PRODUCT(S):**

**DATE:**_____ **APPROVED BY:**_____

**PROCESS FLOW DIAGRAM**

PRODUCT(S): Cooked sausage

| Meat/Poultry | Non-meat Ingredients | Supplies |
|---|---|---|
| ↓ | ↓ | ↓ |
| Storage | Storage | Storage |
| ↓ | ↓ | |
| Meat prep (Tempering, Grinding, Flaking, Dumping, etc.) | Non-meat ingredient compounding | |
| | ↓ | |
| | Pre-blend formulation, staging (rework) | |
| | ↓ | |
| | Chop and/or blend Emulsify | |
| | ↓ | |
| | Stuff | |
| | ↓ | |
| | Shower | |
| | ↓ | |
| | Cook/Smoke | |
| | ↓ | |
| | Chill/Storage | |
| | ↓ | |
| | Peel | |
| | ↓ | |
| | Package | |
| | ↓ | |
| | Storage | |
| | ↓ | |
| | Shipping/Distribution | |

DATE: April 17, 1996 APPROVED BY: J. D. MacIntosh

BILLING CODE 3410–DM–C

*Principle 1—Conduct a Hazard Analysis*

HACCP Principle No. 1 states:

*''Conduct a hazard analysis. Prepare a list of steps in the process where significant hazards occur and describe the preventive measures.''*

The regulation defines a food safety hazard as ''Any biological, chemical, or physical property that may cause a food to be unsafe for human consumption.''

This section will define the hazards and discuss in general where they may occur in meat and poultry production. It will then talk about identifying hazards in your establishment.

Finally, this section will explain how you can apply preventive measures to the hazards you have identified, to ensure that the products are safe for consumers. A preventive measure is defined, in the regulation, as ''Physical, chemical, or other means that can be used to control an identified food safety hazard.''

You will find a far more detailed listing of and discussion of hazards in the *Meat and Poultry Products Hazards and Controls Guide*. The generic HACCP models discuss the hazards specific to various meat and poultry processes, such as raw, ground product or swine slaughter. In addition, the References section of this guidebook lists publications which can help you identify hazards.

To identify biological, chemical, or physical hazards likely to occur, you need to know about the chemical, physical, and microbiological characteristics of meat, poultry, and other ingredients, as well as how various processes affect those characteristics. You also need to understand the interactions among ingredients.

You need to evaluate each step in the process flow diagram to determine whether a biological, chemical and/or physical hazard may be introduced at that step and whether preventive measures are available.

*Biological Hazards*

Biological hazards are living organisms, including microorganisms, that can put human health at risk. Biological hazards include bacteria, parasites, protozoa, viruses, and the like.

Agricultural products and food animals carry a wide range of bacteria. From a public health standpoint, most bacteria are harmless. Others—the pathogenic microorganisms—can cause illness or even death in humans. The numbers and types of bacteria vary from one food or animal species to another, from one geographic region to another, and with production and slaughter or harvesting methods. During production, processing, packaging, transportation, preparation, storage and service, any food may be exposed to bacterial contamination. The most common biological hazards in meat and poultry are microbiological.

Some of the major pathogenic bacterial organisms that can cause foodborne illness from eating meat or poultry are: *Salmonella, Clostridium perfringens, Listeria monocytogenes, Staphylococcus aureus, Campylobacter jejuni, Yersinia enterocolitica, Bacillus cereus, Clostridium botulinum,* and *Escherichia coli* O157:H7.

In the *Meat and Poultry Products Hazards and Controls Guide*, you will find a brief description of the major microorganisms of concern in meat and poultry. Table 1 in that guide describes the temperature and pH ranges and the minimum water activity needed for each organism to grow. Table 4 lists some preventive measures for biological hazards. To thoroughly identify significant biological hazards in your establishment, you need to evaluate each specific ingredient and processing step in your operation.

*Chemical Hazards*

Chemical hazards may also cause foodborne illnesses.

Chemical hazards fall into two categories:

1. Naturally occurring poisons or deleterious substances are those that are natural constituents of foods and are not the result of environmental, agricultural, industrial, or other contamination. Examples include aflatoxins, mycotoxins, and shellfish toxins.

2. Added poisonous or deleterious substances are those which are intentionally or unintentionally added to foods at some point in growing, harvesting, storage, processing, packing, or distribution. This group of chemicals can include pesticides, fungicides, insecticides, fertilizers, and antibiotics, as well as direct and indirect food additives. This group can also include chemicals such as lubricants, cleaners, paints, and coatings.

To identify any chemical hazards, you first need to identify any chemical residues that might be in the animal. To do this, think about the following:

- The types of drugs and pesticides routinely used in raising the animals which are the source of your meat and poultry ingredients.
- Feeds and supplements fed to the animals.
- Environmental contaminants the animals may have come into contact with. This includes both naturally occurring contaminants and added contaminants.
- Pesticides used on plants that may end up as residues in the animal.
- The source of the water the animals were allowed to drink. You can use the following preventive measures to help ensure that animals entering your establishment are free of harmful residues:
- Require that the animals have been raised in conjunction with the January 1994 FDA Compliance Policy Guidelines.
- Require written assurances from suppliers for each lot of animals, stating that the animals are free of illegal residues.
- Set your own maximum allowable residue limits for specific drugs, pesticides, and environmental contaminants in animal urine or tissues as targets to ensure that FDA and EPA tolerances are met.
- Ensure that trucks used to ship the animals do not have chemical hazards that could contaminate the animals.

Most establishments use chemicals during processing and to keep their operations sanitary. Yet you need to be aware that chemical hazards can occur at any of the following points:

- Prior to receiving chemicals at your establishment.
- Upon receiving chemicals.
- At any point where a chemical is used during processing.
- During storage of chemicals.
- During the use of any cleaning agents, sanitizers, lubricants, or other maintenance chemicals.
- Prior to shipment of the finished product.
- In trucks used to ship finished product.

Some of the measures you can use to prevent chemical hazards are:

- Use only approved chemicals.
- Have detailed product specifications for chemicals entering your plant.
- Maintain letters of guarantee from suppliers.
- Inspect trucks used to ship finished product.
- Properly label and store all chemicals.
- Properly train employees who handle chemicals.

In the *Meat and Poultry Products Hazards and Controls Guide*, Table 5 lists some preventive measures for chemical hazards. For still more information, see the publication *HACCP—Establishing Hazard Analysis Critical Control Point Program*, Food Processors Institute, 1993.

*Physical Hazards*

A physical hazard is any physical material not normally found in a food which causes illness or injury to the individual using the product. Physical hazards include a variety of foreign materials or objects, such as glass, metal, and plastic. However, foreign objects which cannot cause illness or injury are not hazards, even though they may not be aesthetically pleasing to your customers.

A number of situations can result in physical hazards in finished products. They include, but are not limited to:

- Contaminated raw materials.
- Poorly designed or poorly maintained facilities and equipment. An example would be rust particles and paint chips falling from overhead structures onto exposed product.
- Improper procedures or improper employee training and practices. For example, by using the wrong cutting technique during the cut-up/prefabrication process, employees could cut off and leave pieces of their rubber gloves in the product.

Measures you can take to prevent physical hazards include, but are not limited to:

- Make sure your plant specifications for building design and operation are accurate and updated regularly.
- Make sure your letters of guarantee for ingredients and product supplies are accurate and updated regularly.
- Perform random visual examinations of incoming product and materials.
- Use magnets and metal detectors to help find metal fragments that would be a physical hazard.
- Use stone traps and bone separators to remove these potential physical hazards.
- Keep equipment well maintained.
- Train employees to identify potential problems.

To identify some preventive measures for physical hazards, see Table 6 in the *Meat and Poultry Products Hazards and Controls Guide*.

*Conducting a Hazard Analysis*

Now that you have some understanding of the types of hazards that can occur and how to identify and prevent them, you are ready to conduct a hazard analysis for each process or product covered in your HACCP plan.

A hazard analysis is the identification of any hazardous biological, chemical, or physical properties in raw materials and processing steps, and an assessment of their likely occurrence and potential to cause food to be unsafe for consumption.

Your hazard analysis needs to be very specific to your establishment and how you make your product, since hazards may vary greatly from one establishment to another. This is due to differences in: sources of ingredients, product formulations, processing equipment, processing methods, duration of the processes and storage, and employee experiences, knowledge, and attitudes.

You also need to review—and perhaps revise—your hazard analysis whenever you make any changes in: raw materials suppliers, product formulation, preparation procedures, processing steps, packaging materials or procedures, distribution or intended use of the product.

Below is a blank Hazard Identification/Preventive Measures form that you may wish to use for your hazard analysis. Below is an example of that form filled in for hazards that might exist in a specific establishment's ground beef process. The form contains space for the process step in which the hazards could occur, the specific hazards, and preventive measures to keep that hazard from occurring. Remember, HACCP is a preventive system.

*Steps in Conducting a Hazard Analysis*

To conduct a hazard analysis, you need to do the following:

First—Evaluate Your Operation for Hazards

1. Review the product description developed in Pre-HACCP Step 2 and determine how this information could influence your hazard analysis.

2. Look at all product ingredients and incoming materials for the product. You developed this list in Pre-HACCP Step 3.

3. For each processing step identified in the process flow diagram, determine if a biological, chemical or physical hazard(s) could exist at that step.

BILLING CODE 3410–DM–P

**HAZARD IDENTIFICATION/PREVENTIVE MEASURES**

**PRODUCT/PROCESS:**

| PROCESS STEP | HAZARD | PREVENTIVE MEASURE(S) |
|---|---|---|
| | | |

**DATE:** _____ **APPROVED BY:** _____

Biological - B
Chemical - C
Physical - P
Hazard Description

**HAZARD IDENTIFICATION/PREVENTIVE MEASURES**

**PRODUCT/PROCESS:** Ground Beef

| PROCESS STEP | HAZARD | PREVENTIVE MEASURE(S) |
|---|---|---|
| Receiving - Meat | B (Microbial Growth) Insufficient temp. control will result in unacceptable microbial proliferation | Maintain product temperature within specified limits. |
| | B (Mishandling) Integrity of immediate container compromised such that microbial growth could occur. | Visual inspection to ensure immediate container is not compromised. |
| | P (Foreign Material) Visible foreign material could compromise product | Visual inspection to ensure no foreign material. |
| Receiving - Non-meat | C (Deleterious Chemicals) Chemicals/non-meat ingredients/packaging materials are acceptable for this use. Food grade for intended use. | Verify letter of guarantee is on file and appropriate for product use. |
| | P (Foreign Material) Visible foreign material that could compromise product safety; insects, etc. | Visual inspection to ensure no foreign material is present. |

**DATE:** July 10, 1996 **APPROVED BY:** Jerry Flores

Biological - B
Chemical - C
Physical - P
Hazard Description

[Note: This page represents only the first two process steps; there are several more.]

BILLING CODE 3410–DM–C

4. To help identify hazards, you can ask the following questions at each processing step:

Could contaminants reach the product during this processing step? Possibilities include: worker handling, contaminated equipment or materials, cross-contamination from raw materials, leaking valves or pipes, dead ends, splashing, etc.

Could any pathogens multiply during this process step to the point where they became a hazard? Consider product temperature, hold time, etc.

Could this step create a situation where an ingredient, work in process, or finished product became contaminated with pathogens?

Could this step introduce a chemical hazard into the product?

Could this step introduce a physical hazard into the product?

5. Fully describe the hazards identified for each step.

6. For each incoming ingredient and material, indicate if a biological, chemical and/or physical hazard exists.

7. To help identify hazards, you can ask the following questions about each ingredient:

Could this ingredient contain any pathogenic microorganisms, toxins, chemicals or physical objects?

If it became contaminated or were mishandled, could this ingredient support the growth of pathogenic microorganisms?

Are any hazardous chemicals used in growing, harvesting, processing or packaging the ingredient?

Is this ingredient hazardous if used in excessive amounts?

If this ingredient were left out or used in amounts lower than recommended, could it result in microbial growth?

Are any chemical or physical hazards associated with this ingredient?

8. You can ask the following questions about the product in general:

Have any livestock entering the slaughter establishment been subjected to hazardous chemicals?

Are any returned/reworked products used as ingredients?

If so, could they cause a hazard?

Are preservatives or additives used in the product formulation to kill or inhibit the growth of microorganisms?

Do the amount and type of acid ingredients, and the resulting product pH, affect the growth/survival of microorganisms?

Does the water activity of the finished product affect microbial growth?

Should refrigeration be maintained for products during transit or in storage?

Are any chemical or physical hazards associated with any packaging materials?

9. Fully describe the hazards identified.

Second—Observe the Actual Operating Practices in Your Operation

After describing the hazards you've identified with each step, you should:

1. Observe the actual operation in your establishment and be sure that it is the usual process or practice.

2. Observe employee practices where raw or contaminated product could cross-contaminate workers' hands, gloves or equipment used for finished/post-process products.

3. Observe product handling past any kill step for potential cross-contamination.

For additional information about potential biological, chemical, and physical hazards, you may wish to consult tables 8 through 12 in the *Meat and Poultry Products Hazards and Controls Guide*. They can serve as a guide for identifying potential hazards in ingredients and at various steps in slaughter and processing. However, they do not address every ingredient and every processing step used in the meat and poultry industry.

*Preventive Measures*

You have identified all significant biological, chemical and physical hazards for each processing step and each ingredient. Now, it is time to identify measures to prevent hazards from compromising the safety of your finished product. Remember, you may not be able to identify a preventive measure for every hazard that you identified. You are ready to fill in the preventive measure(s) column of the Hazard Identification/Preventive Measures Form.

Remember, HACCP defines a preventive measure as ''Physical, chemical, or other means that can be used to control an identified food safety hazard.''

Some examples of preventive measures are:

In beef slaughter, a chemical hazard could result from animals having high levels of drug residues. As a preventive measure, you could test the animals or require letters of guarantee from producers that the animals are free of harmful residues.

In poultry slaughter, the venting, opening and evisceration process could result in a biological hazard from cross contamination by pathogenic microorganisms. Preventive measures for this hazard would be: use Good Manufacturing Practices (GMP's) at all times; properly maintain and operate equipment used to perform these tasks; and rinse food contact surfaces on equipment with chlorinated water between each carcass.

In the grinding step for cooked sausage, a physical hazard could be metal fragments from the grinding equipment. There could be three different preventive measures for this hazard. You could inspect the grinding equipment daily to ensure that it is assembled and operated correctly, is functioning properly, and is not worn or damaged. You could have an employee visually examine the product at the packaging step. Or you could use a metal detector at the packaging step.

In many operations, the packaging step could pose chemical hazards from the packaging materials. A preventive measure could be a letter of guarantee from the supplier that the packaging materials are all food grade.

Once you have identified your preventive measures and written them on your form, you are ready to go on to the next step in developing your HACCP plan. See blank and filled-in forms for preventive measures below.

*Principle 2—Identify Critical Control Points*

HACCP Principle No. 2 states:

*''Identify the Critical Control Points (CCPs) in the process.''*

A critical control point (CCP) is defined as ''A point, step, or procedure in a food process at which control can be applied and, as a result, a food safety hazard can be prevented, eliminated, or reduced to acceptable levels.''

So far, in developing your HACCP plan, you have identified biological, chemical, and physical hazards in the raw materials and ingredients you use and in the steps of your process. You've also identified preventive measures, if they exist, for each hazard that you identified. With this information, your next step is to identify the points in the process at which the preventive measures can be applied to prevent, eliminate, or reduce the hazard. Then you can use the CCP Decision Tree to assess each step in the process to determine whether it is a *critical* control point. (Many control points may not be *critical*; often, companies starting out in HACCP identify too many control points.)

Fortunately, a great deal of work has already been done for you in identifying CCPs. Many CCPs are already recognized in various food processing and production systems. Some common CCPs are:

- Chilling.
- Cooking that must occur for a specific time and temperature in order to destroy microbiological pathogens.

- Product formulation controls, such as mixing ground beef and spices to form a meatball.
- Certain processing procedures, such as filling and sealing cans.
- Prevention of cross contamination between raw and cooked product.
- Certain slaughter procedures, such as evisceration.

These are just a few examples of measures that may be CCPs.

There are many more possibilities. Different facilities, preparing the same food, can differ in the number and location of hazards and the points, steps or procedures which are critical control points. This is due, in part, to differences in plant layouts, equipment used, selection and sources of raw materials and ingredients, or the process that is used.

*Steps in Identifying Critical Control Points*

A good tool for identifying Critical Control Points is the CCP Decision Tree, shown below. The CCP Decision Tree was developed to help companies separate CCPs from other controls. You will get the best results if you use the Decision Tree very methodically and use simple, descriptive, and familiar wording. You should apply the Decision Tree at each step in the process where you have identified a hazard.

You can use the blank Critical Control Point Determination Form, to record the results from your CCP Decision Tree work. Or, you may wish to design your own form. An example of a filled-in Critical Control Point Determination Form for poultry slaughter at one establishment is shown below.

Determining whether a process step is a CCP is really a basic exercise of answering four questions. To use the form and the Decision Tree, follow the next six steps:

1. In Column 1 of the Critical Control Point Determination Form, write in each step in the process where you have identified a hazard.

2. In Column 2, write in the identified hazard(s), indicating whether it is biological, chemical or physical. Then take the information you wrote on your Hazard Identification/Preventive Measures form and answer the following questions for each hazard you identified.

3. Question #1—Do preventive measures exist for the identified hazard?

Note: From a regulatory standpoint, no further action is necessary if the hazard is *not* reasonably likely to occur.

If the answer is yes, write YES and proceed to the next question.

If the answer is no, ask the question ''Is control at this step necessary for safety?''

If control is not necessary at this step in the process, this process step is not a CCP. Write NO in Column 3 and write how and where this hazard will be controlled. Proceed to the next process step and identified hazard you have entered in Columns 1 and 2.

If control is necessary, in Column 3 explain how the step, process or product will be modified to ensure safety.

BILLING CODE 3410–DM–P

## CCP DECISION TREE

(Apply at each step of the process with an identified hazard.)

```
Q1.  DO PREVENTIVE MEASURE(S) EXIST FOR THE IDENTIFIED HAZARD?
      ↓            ↓                          ↑
     YES          NO                 MODIFY STEP, PROCESS OR PRODUCT
      ↓            ↓                                                ↑
      ↓           IS CONTROL AT THIS STEP NECESSARY FOR SAFETY?→ YES
      ↓            ↓
      ↓           NO→ NOT A CCP → STOP*

Q2.  DOES THIS STEP ELIMINATE OR REDUCE
     THE LIKELY OCCURRENCE OF A HAZARD
     TO AN ACCEPTABLE LEVEL? → → → → → → → → → → → → → → → → → →
      ↓                                                ↓
     NO                                               YES
      ↓                                                ↓
                                                        ↓
Q3.  COULD CONTAMINATION WITH IDENTIFIED                ↓
     HAZARD (S) OCCUR IN EXCESS OF ACCEPTABLE           ↓
     LEVEL(S) OR COULD THESE INCREASE TO                ↓
     UNACCEPTABLE LEVEL(S)?                             ↓
      ↓            ↓                                   ↓
     YES          NO → NOT A CCP → STOP*               ↓
      ↓                                                 ↓
                                                        ↓
Q4.  WILL A SUBSEQUENT STEP ELIMINATE                   ↓
     IDENTIFIED HAZARD(S) OR REDUCE THE                 ↓
     LIKELY OCCURENCE TO AN ACCEPTABLE                  ↓
     LEVEL?                          ↓                  ↓
      ↓                              ↓                  ↓
     YES → NOT A CCP → STOP*         NO → → → → → → → → CCP
```

* Proceed to the next step in the described process

**CCP DETERMINATION**

**(A CRITICAL CONTROL POINT IS DEFINED AS A POINT, STEP OR PROCEDURE AT WHICH CONTROL CAN BE APPLIED AND A FOOD SAFETY HAZARD CAN BE PREVENTED, ELIMINATED, OR REDUCED TO ACCEPTABLE LEVELS)**

| PROCESS STEP | HAZARD(S)<br>Biological - B<br>Chemical - C<br>Physical - P<br>Hazard Description | Q1. DO PREVENTIVE MEASURES EXIST FOR THE IDENTIFIED HAZARD(S)?<br>*If no=not a CCP-Identify how and where this hazard will be controlled.<br>* If yes= move to next question. | Q2. DOES THIS STEP ELIMINATE OR REDUCE THE LIKELY OCCURRENCE OF A HAZARD(S) TO AN ACCEPTABLE LEVEL?<br>*If no=move to the next question.<br>*If yes=CCP | Q3. COULD CONTAMINATION WITH IDENTIFIED HAZARD(S) OCCUR IN EXCESS OF ACCEPTABLE LEVELS OR COULD THESE INCREASE TO UNACCEPTABLE LEVELS?<br>*If no=not a CCP.<br>*If yes=move to the next question. | Q4. WILL A SUBSEQUENT STEP ELIMINATE HAZARD(S) OR REDUCE THE LIKELY OCCURRENCE TO AN ACCEPTABLE LEVEL?<br>*If no=CCP.<br>*If yes=not a CCP. | #CCP |
|---|---|---|---|---|---|---|
| | | | | | | |
| | | | | | | |
| | | | | | | |
| | | | | | | |
| | | | | | | |
| | | | | | | |
| | | | | | | |
| | | | | | | |
| | | | | | | |
| | | | | | | |
| | | | | | | |
| | | | | | | |
| | | | | | | |
| | | | | | | |

**DATE:** _____ **APPROVED BY:** _____

## CCP DETERMINATION

**(A CRITICAL CONTROL POINT IS DEFINED AS A POINT, STEP OR PROCEDURE AT WHICH CONTROL CAN BE APPLIED AND A FOOD SAFETY HAZARD CAN BE PREVENTED, ELIMINATED, OR REDUCED TO ACCEPTABLE LEVELS)**

| PROCESS STEP | HAZARD(S)<br>Biological - B<br>Chemical - C<br>Physical - P<br>Hazard Description | Q1. DO PREVENTIVE MEASURES EXIST FOR THE IDENTIFIED HAZARD(S)?<br>*If no=not a CCP-Identify how and where this hazard will be controlled.<br>* If yes= move to next question. | Q2. DOES THIS STEP ELIMINATE OR REDUCE THE LIKELY OCCURRENCE OF A HAZARD(S) TO AN ACCEPTABLE LEVEL?<br>*If no=move to the next question.<br>*If yes=CCP | Q3. COULD CONTAMINATION WITH IDENTIFIED HAZARD(S) OCCUR IN EXCESS OF ACCEPTABLE LEVELS OR COULD THESE INCREASE TO UNACCEPTABLE LEVELS?<br>*If no=not a CCP.<br>*If yes=move to the next question. | Q4. WILL A SUBSEQUENT STEP ELIMINATE HAZARD(S) OR REDUCE THE LIKELY OCCURRENCE TO AN ACCEPTABLE LEVEL?<br>*If no=CCP.<br>*If yes=not a CCP. | #CCP |
|---|---|---|---|---|---|---|
| Scalding | B-Cross Contamination | Yes | Yes | | | CCP #3B |
| | C-None | | | | | |
| | B-None | | | | | |
| Venting Opening Evisceration | B-Cross Contamination. Exposure of opened carcass to enteric pathogens. | Yes | Yes | | | CCP#4B |
| | C-None | | | | | |
| | P-None | | | | | |
| Presentation | B-Cross Contamination | Addressed in SOP's | | | | |
| | C-None | | | | | |
| | P-None | | | | | |
| Off Line Procedures | B-Cross Contamination | Yes | Yes | | | CCP#5B |
| | C-None | | | | | |
| | P-None | | | | | |
| Gizzard Harvest | B-Cross Contamination | No - Controlled at giblet rework/chilling | | | | |
| | C-None | | | | | |
| | B-None | | | | | |

DATE: June 10, 1996 APPROVED BY: Chen Lu

[Note: This page shows 5 intermediate process steps in a poultry slaughter establishment; this establishment has 16 process steps, from receiving through shipment.]

Once the step, process, or product has been modified, return to Question #1.

4. Question #2—Does this step eliminate or reduce the likely occurrence of the hazard(s) to an acceptable level?

If the answer is yes, write YES in Column 4 and identify the step as a CCP in Column 7.

If the answer is no, write NO in Column 4 and proceed to the next question.

5. Question #3—Could contamination with identified hazard(s) occur in excess of acceptable levels or could these increase to unacceptable levels?

If the answer is yes, write YES in Column 5 and proceed to the next question.

If the answer is no, write NO in Column 5, indicating that the step is not a CCP. Then proceed to the next process step and hazard.

6. Question #4—Will a subsequent step eliminate identified hazard(s) or reduce the likely occurrence to an acceptable level?

If the answer is yes, write YES in Column 6, indicating that the step is not a CCP. Then write down which processing step, which occurs later, will reduce the hazard to acceptable levels. Then proceed to the next process step and hazard.

If the answer is no, write NO in Column 6 and identify the step as a CCP in Column 7.

*Principle 3—Establish Critical Limits for Each Critical Control Point*

HACCP Principle No. 3 states:

*''Establish critical limits for preventive measures associated with each identified CCP.''*

The regulation defines critical limit as ''The maximum or minimum value to which a physical, biological, or chemical hazard must be controlled at a critical control point to prevent, eliminate, or reduce to an acceptable level the occurrence of the identified food safety hazard.''

- Critical limits are expressed as numbers, such as:
- Time/temperature
- Humidity
- Water activity
- pH
- Salt concentration
- Chlorine level

You will find that many critical limits for your identified CCPs have already been established. You can find these limits in sources such as regulatory requirements, scientific literature, experimental studies, and through consultation with experts. Some examples of regulatory critical limits for CCPs in meat and poultry production are shown in Table 7 of the *Meat and Poultry Products Hazards and Controls Guide.*

You may wish to establish critical limits that are stricter than regulatory requirements. However, your critical limits must never be less stringent than the requirements.

In some cases, you will need more than one critical limit to control a particular hazard. For example, the critical limits for cooked beef patties are time/temperature, pattie thickness, and conveyor speed.

Below you will find an example of a Critical Limits, Monitoring and Corrective Actions Form. You can use that form, or develop your own, to use in this and the following two sections. You will find an example of that form filled in for swine slaughter in one establishment below. You can find examples of critical limits for specific processes in the HACCP Generic Models.

*Steps in Establishing Critical Limits*

1. For each identified CCP, determine if there is a regulatory critical limit. If so, write that critical limit—or a more stringent one—into the critical limit column of your form.

For example, the regulatory critical limit for chilled poultry is 40 degrees F. So, for the chilling CCP in poultry slaughter, you would write, in the Critical Limit column of your form: ''Deep breast muscle temperature of ≤40 degrees F. as the carcasses exit the chiller.''

2. If there are no regulatory critical limits for a CCP, you need to establish critical limits for the CCP that are adequate to maintain control and prevent a food safety hazard. That is the responsibility of each establishment. You may wish to obtain the assistance of outside HACCP experts to help you determine critical limits for your CCPs. Once you have identified critical limits, enter them into the critical limit column of your form.

3. You should also file, for future reference, any documentation such as letters from outside HACCP experts or scientific reports supporting the critical limits you have identified. This documentation will help validate that the limits have been properly established. In addition, you should keep on file any test results that show your early experience in implementing the HACCP plan, to demonstrate you can implement what is written and make it work.

BILLING CODE 3410–DM–P

## CRITICAL LIMITS, MONITORING AND CORRECTIVE ACTIONS

**PRODUCT:**

| PROCESS STEP/CCP | CRITICAL LIMITS | MONITORING PROCEDURES (WHO/WHAT/WHEN/HOW) | CORRECTIVE ACTIONS |
|---|---|---|---|
| | | | |
| | | | |
| | | | |
| | | | |
| | | | |
| | | | |

**DATE:**_____ **APPROVED BY:**_____

## CRITICAL LIMITS, MONITORING AND CORRECTIVE ACTIONS

**PRODUCT:** SWINE SLAUGHTER

| PROCESS STEP/CCP | CRITICAL LIMITS | MONITORING PROCEDURES (WHO/WHAT/WHEN/HOW) | CORRECTIVE ACTIONS |
|---|---|---|---|
| SCALDING | USE APPROVED CHEMICAL PER 9CFR318.7 NOT TO EXCEED 2%. SCALD TEMPERATURE RANGE 138°-140°F. CARCASS DWELL TIME SUFFICIENT TO LOOSEN HAIR. | OBSERVE LEVELS OF SUBSTANCES AT TIME OF MIX/ VERIFY TYPE AND SPECIFIC AMOUNT OF CHEMICAL UPON ADDITION TO SCALDER AT DESIGNATED TIME/ PLANT-SPECIFIC PROCEDURE FOR SCALDER (TIME/TEMP) QC SUPERVISOR | AT TIME OF MIX: IDENTIFY/CONTROL PROBLEM WITH FORMULATION/ REFORMULATE, ADJUST AS NECESSARY; AT TIME OF ADDITION TO SCALDER: DRAIN, CLEAN, REFILL SCALDER, ADD PROPER MIX OF CHEMICALS/ CORRECT OR ADJUST PROCEDURE/RECONDITION AFFECTED PRODUCT/ DOCUMENT ACTIONS TAKEN, SIGN RECORD |
| DEHAIRING/ GAMBRELLING/ SINGEING/ POLISHING/ WASH/ SHAVING | TIME IN DEHAIRER AND EXPOSURE TO SINGEING DETERMINED BY PLANT-SPECIFIC TESTING RESULTS TO REMOVE VISIBLE HAIR TO AN ACCEPTABLE LEVEL WITHOUT BREAKING SKIN. | RANDOM TIME SAMPLING OF EXPOSURE TO DEHAIRER AND SINGEING FLAME UNITS/ MONITORING OF PLANT-SPECIFIC PROCEDURES FLOOR SUPERVISOR | IDENTIFY/CONTROL AFFECTED PRODUCT OR ADJUST PROCEDURE/ RECONDITION PRODUCT/ DOCUMENT ACTIONS TAKEN AND SIGN RECORD. |

DATE: May 17, 1996 APPROVED BY: [signature]

[Note: This page represents only two steps in this establishment's swine slaughter process.]



BILLING CODE 3410–DM–C

*Principle 4—Establish Monitoring Procedures*

HACCP Principle No. 4 states:

*''Establish CCP monitoring requirements. Establish procedures for using the results of monitoring to adjust the process and maintain control.''*

Monitoring is a planned sequence of observations or measurements to assess whether a CCP is under control and to produce an accurate record for future use in verification.

Monitoring is essential to a HACCP system. Monitoring can warn you if there is a trend towards loss of control, so that you can take action to bring your process back into control before a critical limit is exceeded. For example, say that an establishment tests the pH of a batch of product at 6 a.m., 7 a.m., and 8 a.m. Each time, the pH is within acceptable limits, but it is steadily climbing towards the high end of the range. This information is showing a trend and the establishment should take action to prevent the pH from exceeding the critical limits.

The monitoring procedures you will establish at CCPs will generally relate to on-line processes. Monitoring may be continuous or non-continuous. Continuous monitoring at a CCP usually is done with measuring equipment, such as automatic time-temperature equipment used at a cooking step. Continuous monitoring is better because it results in a permanent record that you can review and evaluate to ensure that the CCP is under control. However, you should regularly check continuous monitoring equipment for accuracy.

You should use non-continuous monitoring procedures when continuous monitoring is not feasible. Non-continuous monitoring can include: visual examinations; monitoring of ingredient specifications; measurements of pH, water activity (Aw), and product temperatures; attribute sampling; and the like. When you use non-continuous monitoring, you need to ensure that the frequency of monitoring is enough to ensure that the hazard is under control and that the monitoring is performed at random times. For instance, each plant needs to set its own times and frequency for checking the cooking time/temperature of products. This may vary from one establishment to another because of differences in plant size, plant layout, the type of product, the length of time for processing, and the product flow.

Each establishment has the responsibility to establish a frequency that ensures that the CCP is under control. In some cases, you may have to perform tests at a CCP or use statistically based sampling.

Monitoring will go much more smoothly if you:

- Clearly identify the employee(s) responsible for monitoring.
- Train the employee(s) monitoring the CCPs in the testing procedures, the critical limits established, the methods of recording test results, and actions to be taken when critical limits are exceeded.
- Ensure that the employee(s) understand the purpose and importance of monitoring.

You can use the Critical Limits, Monitoring and Corrective Actions Form shown below, or you can develop your own form. Below is an example of a form filled in for swine slaughter in one establishment.

*Steps in Establishing Monitoring Procedures*

You can identify monitoring procedures for your HACCP plan by doing the following:

1. For each CCP, identify the best monitoring procedure.
2. Determine the frequency of monitoring for each CCP.
3. Determine if the monitoring activity needs to be done randomly to get a good representation of the product throughout the day's production. If it does, decide how the random monitoring will be done.
4. Determine what testing procedures need to be done for each monitoring function. For example, will you need to do a chlorine check or a temperature measurement?
5. Identify and train the employee(s) responsible for monitoring.
6. Make sure that the employee doing the monitoring signs all records and documents associated with CCP monitoring. Also make sure that the monitoring results are documented or recorded at the time the monitoring takes place.
7. Enter the above information in the monitoring column of your form.

*Principle 5—Establish Corrective Actions*

HACCP Principle No. 5 states:

*''Establish corrective action to be taken when monitoring indicates that there is a deviation from an established critical limit.''*

The regulation defines corrective action as ''Procedures to be followed when a deviation occurs.''

A deviation is a failure to meet a critical limit.

Since HACCP is a preventive system to correct problems before they affect the safety of the food, you have to plan in advance to correct potential deviations from established critical limits. Once your HACCP plan is in place, any time a critical limit is not met, you will need to take corrective actions. Those corrective actions should include:

1. Determining the disposition of non-complying product;
2. Correcting the cause of the non-compliance to prevent a recurrence;
3. Demonstrating that the CCP is once again under control (this means examining the process or product again at that CCP and getting results that are within the critical limits);
4. Maintaining records of the corrective actions.

Under HACCP, you determine in advance what you will do when a critical limit is not met at a CCP. The employee(s) monitoring CCPs should understand this process and be trained to perform the appropriate corrective actions. It is important that an establishment record all corrective actions and that the employee responsible for taking the corrective actions sign all the documentation.

In some cases, the product in question will be held for further investigation of the deviation. This investigation may require a thorough record review, product testing, or consultation with a processing authority.

Some examples of corrective actions are:

- Immediately adjust the process and hold product for further evaluation and disposition.
- Empower employees to stop the line when a deviation occurs, hold all product not in compliance, and call in the plant's quality control manager.
- Rely on an approved alternate process that can be substituted for the one that is out of control at the specific critical control point. For example, if the in-line eviscerators in a poultry slaughter plant are malfunctioning, evisceration can be done by hand as long as Good Manufacturing Practices (GMPs) are followed.

Regardless of the corrective actions you take, you need to keep records that include:

- The deviation that was identified.
- The reason for holding the product; the time and date of the hold; the amount of product involved; the disposition and/or release of product; and the individual who made the disposition decision.
- Actions to prevent the deviation from recurring.

You can use the Critical Limits, Monitoring and Corrective Actions form below or you can develop your own

form. A sample form, filled in for swine slaughter, appears below.

*Steps in Establishing Corrective Actions*

1. For each CCP, determine the corrective action to take if the critical limits are exceeded. Determine what should be done with the product if a deviation occurs at this step. You may need more than one corrective action for a CCP.

2. Develop the record form to capture all the necessary information on the deviation, and identify the employee responsible for maintaining and signing the record.

3. Ensure that employees conducting the monitoring at each CCP are fully trained and know the corrective actions to take if a deviation occurs.

4. Enter the appropriate corrective action(s) for each CCP in the corrective action column of the Critical Limits, Monitoring and Corrective Actions form and identify the record that will be maintained.

*Principle 6—Establish Recordkeeping Procedures*

HACCP Principle No. 6 states:

*''Establish effective recordkeeping procedures that document the HACCP system.''*

Maintaining proper HACCP records is an essential part of the HACCP system. Good HACCP records—meaning that they are accurate and complete—can be very helpful to you for the following reasons:

- Records serve as written documentation of your establishment's compliance with its HACCP plan.
- Records allow you to trace the history of an ingredient, in-process operations, or a finished product, should problems arise.
- Records help you identify trends in a particular operation that could result in a deviation if not corrected.
- If you were ever faced with a product recall, HACCP records could help you identify and narrow the scope of such a recall.
- Well-maintained records are good evidence in potential legal actions against an establishment.

In accordance with the HACCP principles, your HACCP system should include records for CCPs, establishment of critical limits, handling of deviations, and your HACCP plan. Examples of these and other HACCP forms that may be useful in assembling the HACCP plan are located in the appropriate sections of this guidebook. For your review, these forms are:

Product(s) Description Form
Product and Ingredients Form
Process Flow Diagram Form
Hazard Identification/Preventive Measures Form
CCP Determination Form
Critical Limits, Monitoring and Corrective Actions Form
Recordkeeping and Verification Form (Verification will be explained in the next section of this guidebook)
HACCP Plan Form

In many cases, the records you currently maintain may be sufficient to document your HACCP system. Records must contain at least the following information: title and date of record; product identification; critical criteria or limits; a line for the monitor's signature; a place for the reviewer's signature; and, an orderly manner for entering the required data.

An example of a blank Recordkeeping and Verification Form is found below. Also below is an example of the form filled in for cooked sausage in one establishment.

*Steps in Establishing Recordkeeping Procedures*

1. Review the records you currently maintain and determine which ones adequately address the monitoring of the CCPs you have identified, or develop forms for this information.

2. Develop any forms necessary to fully record corrective actions taken when deviations occur.

3. Develop forms to document your HACCP system. (This will be explained in the next section, on verification).

4. Identify the monitoring employees responsible for entering data into the records and ensure that they understand their roles and responsibilities.

5. Enter the record form name(s) on the Recordkeeping and Verification Form under the records column adjacent to the appropriate CCP. (Verification will be explained in the next section).

6. Enter the appropriate record form name(s) on the Recordkeeping and Verification Form under the verification procedures column adjacent to the appropriate CCP. (Verification will be explained in the next section).

*Principle 7—Establish Verification Procedures*

HACCP Principle No. 7 states:

*''Establish procedures to verify that the HACCP system is working correctly.''*

After a HACCP plan has been put into place, verification activities occur on an ongoing basis. Verification entails the use of methods, procedures, or tests in addition to those used in monitoring, to determine whether the HACCP system is operating as intended.

Simply stated, you need to verify that your HACCP system is working the way you expected it to work. There are several areas that warrant checking. You will probably first want to review your HACCP plan to determine whether the CCPs and critical limits that you established are really the right ones and that you are controlling and monitoring them adequately. You should also make sure that employees are following your procedures for taking corrective actions when a critical limit is exceeded. Finally, you should check to see that your employees are keeping good HACCP records.

By doing these things, you will evaluate the day-to-day operation of your HACCP system. Don't be surprised if you find that you need to fine-tune your HACCP plan.

Some things you can do to verify your HACCP system are:

- Analytically test or audit your monitoring procedures;
- Calibrate your temperature equipment;
- Sample your product, including microbiological sampling;
- Review your monitoring records;
- Review your records of deviations and product dispositions;
- Inspect and audit your establishment's operations;
- Sample for environmental and other concerns.

BILLING CODE 3410–DM–P

**RECORDKEEPING AND VERIFICATION**

**PRODUCT:**

| PROCESS STEP/CCP | RECORDS | VERIFICATION PROCEDURES |
|---|---|---|
| | | |

**DATE:**_____ **APPROVED BY:**_____

**RECORDKEEPING AND VERIFICATION**

**PRODUCT:** Cooked sausage

| PROCESS STEP/CCP | RECORDS | VERIFICATION PROCEDURES |
|---|---|---|
| Receiving Non-meat ingredients | Receiving Record | Review Daily Receiving Record against approved supplies Quarterly collect audit sample for lab analysis |
| Cook/Smoke CCP | Handwritten smokehouse log and smokehouse temperature recording chart | Review daily smokehouse logs & charts. Calibrate temperature measuring devices weekly & temperature recording charts quarterly Quarterly, collect samples for micro. analysis. |
| Packaging CCP | Metal Detection Log | Review log daily & corrective action records. Calibrate equipment daily against known standard. Conduct spot checks of equipment weekly. |

**DATE:** April 23, 1996 **APPROVED BY:** J. D. MacIntosh

BILLING CODE 3410–DM–C

You can use the Recordkeeping and Verification Form to record your verification procedures. A sample blank form appears below. An example filled in for cooked sausage in one establishment appears below.

*Steps in Establishing Verification Procedures*

1. Determine the appropriate verification procedure to ensure that each CCP and critical limit is adequately controlled and monitored.
2. For each CCP, determine procedures to ensure that employees are following your established procedures for handling product deviations and for recordkeeping.
3. Identify the frequencies for conducting any verification checks and the records where the results will be recorded.
4. Enter the appropriate details on the Recordkeeping and Verification Form for future reference.

*Validate Your HACCP Plan*

It is very important to validate your HACCP plan. The regulation defines validation as ''the scientific and technical process for determining that the CCPs and associated critical limits are adequate and sufficient to control likely hazards.''

Simply put, when you validate your HACCP plan, you demonstrate that what you have written and put into place can actually prevent, eliminate, or reduce the levels of hazards that you have identified.

To validate your HACCP plan, you need to assemble information to show that your HACCP plan will work to control the process and to prevent food safety hazards. There are two types of information that you will probably collect. First, you will likely gather supporting scientific information, such as studies that establish the time and temperatures necessary to kill certain harmful bacteria. Second, you may wish to gather practical information, such as test results from products produced under your HACCP plan. An example of a test might be microbiological analysis of your finished, ready-to-eat products. There are many sources of information to validate your HACCP plan, including: the scientific literature, product testing results, experimental research results, scientifically-based regulatory requirements, official FSIS guidelines, or information developed by process authorities.

You have a great deal of flexibility in assembling the information to validate your plan, in terms of both source and quantity of information. For example, a slaughter plant should validate that its plan ensures residue control, to prevent violative levels of chemicals, animal drugs or pesticides in carcasses. A slaughter plant might choose to purchase animals only from suppliers who provide veterinary certifications that the animals have been raised under a program that assures that all animal drugs, pesticides, and other chemicals are properly used. In this situation, the establishment could validate this critical control point with the following information: a copy of the residue prevention program under which the producer is certified; a report of an on-site visit to the feedlot; and results of analyses of carcasses for compounds of concern.

Validation is simpler for HACCP plans for products such as cooked beef, roast beef, or cooked corned beef. Current regulatory requirements for these products include scientifically-based processing times, temperatures, and handling requirements. Your HACCP plan would need only to reflect these regulatory requirements; additional information would be unnecessary. In this case, you could do a minimal number of product analyses to demonstrate that hazards of concern, such as *Salmonella*, were not found in the products produced under the HACCP plan.

It is important that you reassess your HACCP plan at least once a year and whenever any of the following occurs:

1. Potential new hazards are identified that may be introduced into the process for the product.
2. You add new ingredients.
3. You change the process steps or procedures.
4. You introduce new or different processing equipment.

*Finishing Your HACCP Plan*

Now you are ready to assemble all your information into one HACCP Plan. A sample HACCP Plan blank form is provided below. An example of a form filled in for one establishment's canned beef stew process is shown below. It is important for your records that you assemble all your information into a final HACCP plan. To make sure that your HACCP Plan is complete, you may want to check it against the checklist provided in the next section of this guidebook.

Now you are ready to put your HACCP Plan into action and make HACCP a reality in your establishment.

BILLING CODE 3410–DM–P

## HACCP PLAN

**PRODUCT:**

| PROCESS STEP | BIOLOGICAL - B<br>CHEMICAL - C<br>PHYSICAL - P<br>HAZARD DESCRIPTION | CCP | CRITICAL LIMITS | MONITORING PROCEDURES/FREQUENCY/ PERSON RESPONSIBLE | CORRECTIVE/PREVENTIVE ACTION/PERSON RESPONSIBLE | HACCP RECORDS | VERIFICATION PROCEDURES/PERSON RESPONSIBLE |
|---|---|---|---|---|---|---|---|
| | | | | | | | |
| | | | | | | | |
| | | | | | | | |

**DATE:**_____ **APPROVED BY:**_____

## HACCP PLAN

**PRODUCT:** Canned Beef Stew

| PROCESS STEP | BIOLOGICAL - B<br>CHEMICAL - C<br>PHYSICAL - P<br>HAZARD DESCRIPTION | CCP | CRITICAL LIMITS | MONITORING PROCEDURES/FREQUENCY/ PERSON RESPONSIBLE | CORRECTIVE/PREVENTIVE ACTION/PERSON RESPONSIBLE | HACCP RECORDS | VERIFICATION PROCEDURES/PERSON RESPONSIBLE |
|---|---|---|---|---|---|---|---|
| Formulation | B - Microbial Growth (C. botulinum) | 6B | Product formulated using quantities of ingredients specified in the formula | Monitor formulation of product as each component is added. Record all findings in HACCP record log and sign record/ Formulation supervisor | Identify and control affected product, correct procedure; evaluate operation for cause of deficiency take corrective action; document action in HACCP records logs and sign. Formulation supervisor | Record all results and corrective actions in specific record and sign | Audit to verify accuracy of records; Check if Critical Limit is correct and adequate for hazard; assure corrective actions are adequate; document findings. QC Manager |
| Filling | B- Microbial Growth | 7B | Container filled to required fill weight as specified in recommended process schedule | Monitor operational filling procedures. Recorded all findings in HACCP records log and sign. / Filling Machine operator | Identify and control affected product; empty all rejected containers and rework contents; correct or adjust procedure; evaluate operator for cause of deficiency; take corrective | Record all results and corrective actions in HACCP records | Audit to verify calibration of metering devices and accuracy of records; review records to assure accuracy; check to see if Critical Limit is adequate for hazard and comparable to |
| | | | | | action; document actions in HACCP records log and sign/ Filling Machine Operator | log and sign. | plant records; assure corrective actions are adequate; document findings / QC manager |

**DATE:** August 5, 1996 **APPROVED BY:** R. S. Winston-Jones

[Note: This page represents only two steps in this establishment's process for canned beef stew]

*HACCP Plan Checklist*

You can use the HACCP Plan Checklist provided in this section to ensure that your HACCP plan adequately addresses all seven HACCP principles.

When completing the checklist, if you answer ''NO'' to any question, you reevaluate that section of the HACCP plan and make whatever modifications are necessary. Some modifications may require the assistance of recognized HACCP experts.

Any time you make major changes to the HACCP plan based upon product or process modifications, it would be advisable to review the checklist to ensure that the revisions are acceptable.

You can keep the HACCP Plan Checklist as part of your HACCP plan for future reference and to provide documented evidence that your HACCP plan addresses all seven HACCP principles.

ESTABLISHMENT NO. _____
PRODUCT/PROCESS _____
DATE _____

## HACCP PLAN CHECKLIST

| | | |
|---|---|---|
| A. DESCRIBE THE PRODUCT | YES | NO |
| 1. Does the HACCP plan include: | | |
| a. The producer/establishment and the product name? | | |
| b. The ingredients and raw materials used along with the product receipt or formulation? | | |
| c. The packaging used? | | |
| d. The temperature at which the product is intended to be held, distributed and sold? | | |
| e. The manner in which the product will be prepared for consumption? | | |
| 2. Has a flow diagram for the production of the product been developed that is clear, simple, and descriptive of the steps in the process? | | |
| 3. Has the flow diagram been verified for accuracy and completeness against the actual operating process? | | |
| B. CONDUCT A HAZARD ANALYSIS | YES | NO |
| 1. Have all steps in the process been identified and listed where hazards of potential significance occur? | | |
| 2. Have all hazards associated with each identified step been listed? | | |
| 3. Have safety concerns been differentiated from quality concerns? | | |
| 4. Have preventive measures to control the identified hazard been identified, if they exist, and listed? | | |
| C. IDENTIFY CRITICAL CONTROL POINTS | YES | NO |
| 1. Has the CCP Decision Tree been used to help determine if a particular step is a CCP for a previously identified hazard? | | |
| 2. Have the CCPs been entered on the forms? | | |
| 3. Have all significant hazards identified during the hazard analysis been addressed? | | |
| D. ESTABLISH CRITICAL LIMITS | YES | NO |
| 1. Have critical limits been established for each preventive measure at each CCP? | | |
| 2. Has the validity of the critical limits to control the identified hazard been established? | | |
| 3. Were critical limits obtained from the regulations, processing authority, etc? | | |
| 4. Is documentation attesting to the adequacy of the critical limits maintained on file at the establishment? | | |
| E. ESTABLISH MONITORING PROCEDURES | YES | NO |
| 1. Have monitoring procedures been developed to assure that preventive measures necessary for control at each CCP are maintained within the established critical limits? | | |
| 2. Are the monitoring procedures continuous or, where continuous monitoring is not possible, is the frequency of monitoring sufficiently reliable to indicate that the hazard is under control? | | |
| 3. Have procedures been developed for systematically recording the monitoring data? | | |
| 4. Have employees responsible for monitoring been identified and trained? | | |
| 5. Have employees responsible for reviewing monitoring records been identified and trained? | | |
| 6. Have signatures of responsible individuals been required on the monitoring records? | | |
| 7. Have procedures been developed for using the results of monitoring to adjust the process and maintain control? | | |
| F. ESTABLISH CORRECTIVE ACTIONS | YES | NO |
| 1. Have specific corrective actions been developed for each CCP? | | |
| 2. Do the corrective actions address: | | |
| a. Reestablishment of process control? | | |
| b. Disposition of affected product? | | |
| c. Procedures to correct the cause of non-compliance and to prevent the deviation from recurring? | | |
| 3. Have procedures been established to record the corrective actions? | | |
| 4. Have procedures been established for reviewing the corrective action records? | | |
| G. ESTABLISH RECORDKEEPING PROCEDURES | YES | NO |
| 1. Have procedures been established to maintain the HACCP plan on file at the establishment? | | |
| 2. Do the HACCP records include: | | |
| Description of the product and its intended use? | | |
| Flow diagram for the process, indicating CCPs? | | |
| Preventive measures? | | |
| Critical limits? | | |
| Monitoring system: | | |
| Corrective action plans for deviations from critical limits? | | |
| Recordkeeping procedures for monitoring? | | |
| Procedures for verification of the HACCP system? | | |
| H. ESTABLISH VERIFICATION PROCEDURES | YES | NO |
| 1. Have procedures been included to verify that all significant hazards were identified in the HACCP plan when it was developed? | | |
| 2. Have procedures been included to verify that the critical limits are adequate to control the identified hazards? | | |
| 3. Are procedures in place to verify that the HACCP system is functioning properly? | | |

HACCP PLAN CHECKLIST—Continued

| | | |
|---|---|---|
| 4. Are procedures in place to reassess the HACCP plan and system on a regular basis or whenever significant product, process or packaging changes occur? | | |

References

Agriculture Canada. *Food Safety Enhancement Program—Implementation Manual.* Camelot Drive, Nepean, Ontario, Canada. American Meat Institute Foundation. *HACCP: The Hazard Analysis and Critical Control Point System in the Meat and Poultry Industry.* 1994. Washington, D.C.

Bean, N. H. and Griffin, P. M. 1990. ''Foodborne disease outbreaks in the United States, 1973–1987: Pathogens, vehicles, and trends.'' J. Food Protect. 53: 804–817.

Bean, N. H. and Griffin, P. M. 1990. ''Foodborne disease outbreaks, 5-year summary, 1983–1987.'' J. Food Protect. 53: 711.

Corlett, D.A., Jr. and R.F. Steir. 1991. ''Risk assessment within the HACCP system.'' Food Control 2:71–72.

Council for Agricultural Science and Technology. *Risks Associated with Foodborne Pathogens.* February 1993.

Environmental Protection Agency. 1992. *Tolerances for Pesticides in Foods.* Title 40, Code of Federal Regulations, Part 185. U.S. Government Printing Office, Washington, DC.

FDA. 1989. *The Food Defect Action Levels.* FDA/CFSAN. Washington, DC.

FDA. 1994. *Fish and Fishery Products Hazards and Control Guide—Get Hooked on Seafood Safety.* Office of Seafood. Washington, DC.

International Commission on Microbiological Specification for Foods. 1989. *Microorganisms in Foods 4. Application of hazard analysis and critical control point (HACCP) system to ensure microbiological safety and quality.* Blackwell Scientific Publications, Boston.

National Advisory Committee on Microbiological Criteria for Foods (NACMCF). March 20, 1992—Hazard Analysis and Critical Control Point System. Int. J. Food Micr. 16: 1–23.

National Advisory Committee on Microbiological Criteria for Foods (NACMCF). June 1993—Report on Generic HACCP for Raw Beef. Food Micr. 10: 449–488.

Oblinger, J. L., ed. 1988. ''Bacteria Associated with Foodborne Illnesses, A Scientific Status Summary by the Institute of Food Technologists Expert Panel on Food Safety and Nutrition.'' Food Technol. 42(4).

Padhye, N. V.; Doyle, M. P. 1992. ''E. Coli 0157:H7 Epidemiology, pathogenesis, and methods for detection in food.'' J. Food Prot. 55:55–565.

Pierson, M. D. and Corlett, D. A., Jr. ed. 1992. *HACCP/ Principles and Applications. Van Nostrand Reinhold.*

Schuchat, A., Swaminathan, B. And Broome, C.V. 1991. ''Epidemiology of human listeriosis.'' Clin. Microbiol. Rev. 4: 169–183.

Stevenson, K. E. ed. 1993. *HACCP-Establishing Hazard analysis Critical Control Point Programs.* A Workshop Manual. The Food Processors Institute. Washington, D.C.

Tauxe, R.V., Hargett-Bean, N., Patton, C.M. and Wachsmuth. I.K. 1988. ''Campylobacter isolates in the United States, 1982–1986.'' In, CDC Surveillance Summaries, June 1988. MMWR 37 (No. SS- 2) : 1–13.

Tauxe, R. V., *Epidemiology of Camplyobacter jejuni infections in the United States and other Industrialized Nations.* In Nachamkin, Blaser, Tompkins, ed. Camplyobacter jejuni: Current Status and Future Trends, 1994, chapter 2, pages 9–19.

Todd, E. 1990. ''Epidemiology of Foodborne Illness: North America.'' The Lancet 336:788.

Tompkin, R. B. 1990. ''The Use of HACCP in the Production of Meat and Poultry Products. J. of Food Protect.'' 53(9): 795–803.

Tompkin, R. B. 1995. *The Use of HACCP for Producing and Distributing Processed Meat and Poultry Products.* In Advances in Meat Research. Volume 10. Hazard Analysis Critical Control Point (HACCP) in Meat, Poultry and Seafoods. Chapman & Hall (In Press).

USDA, 1994. *List of Propriety Substances and Nonfood Compounds Authorized for Use under USDA Inspection and Grading Programs.* USDA, FSIS, Washington, DC.

Internet Home Pages

Agriculture Canada
http://aceis.agr.ca

Center for Disease Control
http://fftp.cdc.gov/pub/mmwr/MMWRweekly

Food Law Sites
http://www.fsci.umn.edu/FoodLaw/foodlaw.html

HACCP95
http://www.cvm.uiuc.edu/announcements/haccp95/haccp95.html

International Meat and Poultry HACCP Alliance
http://ifse.tamv.edu./haccpall.html

Material Safety Data Sheets
http://listeria.nwfsc.noaa.gov/msds.html

U.S. Department of Agriculture
http://www.usda.gov

U.S. Food and Drug Administration/Bad Bug Book
http://vm.cfsan.fda.gov/list.html

## Appendix D—Hazards and Preventive Measures Guide

*Preface*

This Guide is designed to help a plant's HACCP team conduct a hazard analysis (HACCP Principle 1) by providing both general and detailed information on hazards associated with meat and poultry products and by listing some of the controls that can be used to prevent or manage those hazards. When using this Guide it is very important to remember that it is not all-inclusive: There may be other hazards associated with ingredients or processes; there may be other control measures. The examples assembled here are to help plant HACCP teams think through all the hazards that could affect their product and know about various controls that can be used.

Section I describes some of the biological (including microbiological), chemical, and physical hazards generally recognized and associated with meat and poultry products. This section can serve as a resource when the HACCP team begins the hazard analysis. It is probably useful to read through this general information early in the process of developing the HACCP plan. This will help the team form an idea of what is meant by a given hazard.

Section II provides information on generally recognized preventive measures used in the meat and poultry industry to control biological, chemical, and physical hazards. This section also has examples of regulatory critical limits associated with some preventive measures.

Sections III, IV, and V list processing steps, hazards, and controls for beef, poultry, and swine slaughter. This section should be used with the process flow diagram developed by the HACCP team.

Section VI presents hazards and controls organized according to ingredients, including both meat and poultry ingredients and other ingredients used in meat and poultry production. This section should be used with the list of ingredients developed by the HACCP team.

Section VII contains a set of tables identifying potential hazards at various processing steps used to produce meat and poultry products. This section should be used with the process flow diagram developed by the plant's HACCP team.

Section VIII contains a list of valuable references that will help the plant's HACCP team further develop the HACCP plan.

*Section I*

Overview of Biological, Chemical, and Physical Hazards

In a HACCP system, a hazard is defined as a biological, chemical, or physical property that may cause a food

to be unsafe for human consumption. This guide is a reference for plant HACCP teams to use in their hazard identification and analysis. It is not intended to be totally inclusive; the team may have other information or may rely on additional references.

Biological Hazards

Biological hazards, which are mainly bacterial, can cause either foodborne infections or intoxications. A foodborne infection is caused by a person ingesting a number of pathogenic microorganisms sufficient to cause infection as a result of their multiplication, e.g., salmonellosis. A foodborne intoxication is caused by the ingestion of already formed toxins produced by some bacteria when they multiply in food, e.g., staphylococcal enterotoxin.

When assessing bacterial hazards to human health in meat and poultry products, nine pathogenic bacteria must be considered. The following identifies and discusses the nine pathogenic microorganisms of concern.

*Bacillus cereus*

*B. cereus* foodborne intoxication includes two recognized types of illness—diarrheal and emetic (vomiting).

Foods associated with illness include: Boiled and fried rice, custards, cecal products meats, vegetables, and fish; food mixtures such as sauces, puddings, soups, casseroles, pastries, and salads.

*Campylobacter jejuni*

Campylobacteriosis is the illness caused by *C. jejuni*. It is also often known as campylobacter enteritis or gastroenteritis.

Food associated with illness include: raw and undercooked chicken, raw milk, non-chlorinated water.

*Clostridium botulinum*

Foodborne botulism (as distinct from wound botulism and infant botulism) is a severe foodborne disease caused by the ingestion of foods containing the potent neurotoxin formed during growth of the organism. Botulism has a high mortality rate if not treated immediately and properly.

Foods associated with disease include: sausages, meat products, and seafood products, improperly canned foods, vegetable products.

*Clostridium perfringens*

Perfringens foodborne illness is the term used to describe the common foodborne disease caused by the release of enterotoxin during sporulation of *C. perfringens* in the gut.

Foods associated with illness include: meat and poultry products and gravy.

*Escherichia coli O157:H7*

Hemorrhagic colitis is the name of the acute disease caused by *E. coli* O157:H7.

Foods associated with illness: undercooked or raw hamburger (ground beef) has been implicated in many documented outbreaks and in other sporadic cases; other meat products, raw milk, untreated water.

*Listeria monocytogenes*

Listeriosis is the name of the general group of disorders caused by *L. monocytogenes*.

Foods associated with illness: cole slaw, cooked poultry, cooked meat, and raw milk, supposedly pasteurized fluid milk, cheeses (particularly soft-ripened varieties). Its ability to grow at temperatures as low as 3 °C permits multiplication in refrigerated foods.

*Salmonella spp*

*S. typhi* and the paratyphoid bacteria are normally septicemic and produce typhoid or typhoid-like fever in humans and are pathogenic only for humans. Other forms of salmonellosis generally produce milder symptoms. The organism is found in the intestinal tracts of warm blooded animals.

Foods associated with illness: raw and cooked meats, poultry, eggs (and exterior of egg shells), untreated water, raw milk and dairy products, fish, shrimp, frog legs, yeast, sauces and salad dressing, etc.

*Staphylococcus aureus*

Staphylococcal food poisoning (staphylococcal enterotoxicosis; staphylococcal enterotoxemia) is the name of the condition caused by the enterotoxins that some strains of *S. aureus* produce.

Foods associated with illness: meat and meat products; poultry and egg products; egg, tuna, ham, chicken, potato, and macaroni salads; sandwich fillings; milk and dairy products; etc.

*Yersinia enterocolitica*

Yersiniosis is the name of the disease caused by pathogenic species in the genus *Yersinia*. The disease is a gastroenteritis with diarrhea and/or vomiting, and fever and abdominal pain.

Foods associated with illness: meats, oysters, fish, milk, and chitterlings.

TABLE 1.—CHARACTERISTICS OF GROWTH FOR NINE PATHOGENS ASSOCIATED WITH MEAT AND POULTRY PRODUCTS

| Pathogens | Temperature of growth | pH | Minimum $A_w$ |
|---|---|---|---|
| *Bacillus cereus* | 10–48 °C | 4.9–9.3 | 0.95 |
| *Campylobacter jejuni* | 30–47 °C | 6.5–7.5 | ..... |
| *Clostridium botulinum* | 3.3–46 °C | >4.6 | 0.94 |
| (Types A,B,E) | ..... | ..... | ..... |
| *Clostridium perfringens* | 15–50 °C | 5.5–8.0 | 0.95 |
| *Escherichia coli O157:H7* | 10–42 °C | 4.5–9.0 | ..... |
| *Listeria monocytogenes* | 2.5–44 °C | 5.2–9.6 | ..... |
| *Salmonella* | 5–46 °C | ..... | 4–9 0.94 |
| *Staphylococcus aureus* | 6.5–46 °C | 5.2–9 | 0.86 |
| *Yersinis enterocolitica* | 2–45 °C | 4.6–9.6 | ..... |

Zoonotic agents are biological hazards that cause disease in animals and can be transmitted and cause disease in humans. The following lists some zoonotic hazards:

*Trichinella spiralis* is a nematode parasite whose larval from encysts primarily in the striated muscle of pigs, horses, rats, bears and other mammals. Infection in humans results in ''flu-like symptoms'' (diarrhea, fever, stiffness, muscle pain, respiratory distress, etc.) And heavy infection may lead to death.

Foods associated with illness include: raw and undercooked pork, bear and equine meat.

*Taenia saginata* is a human tapeworm whose larval form (*Cysticercus bovis*) encysts in the tissues of cattle.

Foods associated with illness include: raw or undercooked beef.

*Taenia solium* is a human tapeworm whose larval form (*Cystricercus cellulosae*) encysts in the tissues of pigs,

dogs, and humans. Cysts in humans are most common in the subcutaneous tissues, eye and the brain.

Foods associated with illness include: raw or undercooked pork.

*Toxoplasma gondii* is a protozoan parasite that encysts in the tissues of a variety of mammalian hosts including pigs. Human infection may result in ''flu like'' symptoms in adults, late term abortions in pregnant women or serious congenial infections in children.

Foods associated with illness include: raw or undercooked pork.

*Balantidium coli* is a protozoal organism.

Foods associated with illness include: raw, undercooked pork (fecal contamination)

*Cryptosporidium spp.*

Foods associated with illness include: inadequately treated water, raw or undercooked veal or beef.

*Chemical Hazards*

While biological hazards are of great concern because contaminated foods can cause widespread illness outbreaks, chemical hazards may also cause foodborne illnesses, although generally affecting fewer people.

Chemical hazards can originate from four general sources:

(1) Agriculture chemicals: pesticides, herbicides, animal drugs, fertilizers, etc.

(2) Plant chemicals: cleaners, sanitizers, oils, lubricants, paints, pesticides, etc.

(3) Naturally-occurring toxicants: products of plant, animal, or microbial metabolisms such as aflatoxins, etc.

(4) Food chemicals: preservatives, acids, food additives, sulfiting agents, processing aids, etc.

(5) Environmental contaminants: lead, cadmium, mercury, arsenic, PCBs.

For many years the Food Safety and Inspection Service has conducted a National Residue Program to monitor the occurrence of residues from hazardous chemicals in meat and poultry products. Under a HACCP regime, frontline responsibility for control of residues from animal drugs or environmental contaminants will move from the government to the industry, although the agency will continue to verify that these controls and preventive measures are effective. Companies that slaughter livestock and poultry will probably find the FSIS National Residue Program Plan to be a useful document. The plan contains lists of compounds that might leave residues in the tissues of animals or birds, and provides some information on their relative risk through the rankings in the Compound Evaluation System. It provides information on which compounds FSIS has included in its annual testing program. It also provides information on the methods that are used to test for the compounds. Another FSIS document, the Domestic Residue Data Book, presents the results of FSIS testing. These data can help a HACCP team understand the overall hazard presented by various residues, although each company should gather information about the residue control performance of its own suppliers.

Another useful reference about hazardous chemicals is the FSIS List of Proprietary Substances and Nonfood Compounds. This publication lists substances used in the preparation of product and nonfood compounds used in the plant environment that have been authorized by FSIS.

Table 2 identifies some additional sources of chemical hazards. References listed in Section VIII can be used by the HACCP team in evaluating the potential chemical hazards associated with their product or process.

TABLE 2.—TYPES OF CHEMICAL HAZARDS

| Location | Hazard |
|---|---|
| Raw Materials | Pesticides, antibiotics, hormones, toxins, fertilizers, fungicides, heavy metals, PCBs. Color additives, inks, indirect additives, packaging materials. |
| Processing | Direct food additives—preservatives (nitrite), flavor enhancers, color additives. Indirect food additives—boiler water additives, peeling aids, defoaming agents. |
| Building and Equipment Maintenance | Lubricants, paints, coatings. |
| Sanitation | Pesticides, cleaners, sanitizers. |
| Storage and Shipping | All types of chemicals, cross contamination. |

*Physical Hazards*

Physical hazards include a variety of materials referred to as extraneous materials or foreign particles or objects. A physical hazard can be defined as any physical material not normally found in a food that can cause illness or injury to a person consuming the product.

Physical hazards in finished products can arise from several sources, such as contaminated raw materials, poorly designed or maintained facilities and equipment, faulty procedures during processing, and improper employee training and practices. Table 3 identifies some common physical hazards and their causes or sources.

TABLE 3.—TYPES OF PHYSICAL HAZARDS

| Hazard | Source or cause |
|---|---|
| Glass | Bottles, jars, light fixtures, utensils, gauge covers, thermometers. |
| Metal | Nuts, bolts, screws, steel wool, wire, meat hooks. |
| Stones | Raw materials. |
| Plastics | Packaging materials, raw materials. |
| Bone | Raw material, improper plant processing. |
| Bullet/BB Shot/Needles | Animals shot in field, hypodermic needles used for infections. |
| Jewelry | Pens/pencils, buttons, careless employee practices. |

*Section II*

Controls and Critical Limits for Biological, Chemical, and Physical Hazards

When all significant biological, chemical, and physical hazards are identified along with their points of occurrence, the next task is to identify measures to prevent the hazards from compromising the safety of the finished product.

Preventive measures or controls can be defined as physical, chemical, or other factors that can be used to remove or limit an identified hazard. When considering preventive measures or controls, a limit must be established—this is the criterion that must be met to ensure safety. For example, proper heat treatment will control some pathogenic bacteria, and it is thus crucial to know what time/temperature combinations constitute proper heat treatment for various products; these time/temperature combinations are the critical limits. Another example of a preventive measure for a biological hazard is the chlorination of poultry chiller water to prevent cross contamination of carcasses with *Salmonella*.

With identified physical hazards, the most common preventive measures may be visual examinations of product or the use of a metal detector. Chemical hazards associated with raw materials may be controlled through detailed product specifications, letters of guarantee, or purchase specifications.

Tables 4, 5, and 6 identify preventive measures that may be considered by the HACCP team. Table 7 gives some examples of regulatory limits.

TABLE 4.—EXAMPLES OF PREVENTIVE MEASURES FOR BIOLOGICAL HAZARDS

| Pathogen | Preventive measure or control |
|---|---|
| *Bacillus cereus* | Proper holding and cooling temperatures of foods; thermal processing of shelf-stable canned food. |
| *Campylobacter jejuni* | Proper pasteurization or cooking; avoiding cross-contamination of utensils, equipment; freezing; atmospheric packaging. |
| *Clostridium botulinum* | Thermal processing of shelf-stable canned food; addition of nitrite and salt to cured processed meats; refrigeration of perishable vacuum packaged meats; acidification below pH 4.6; reduction of moisture below water activity of 0.93. |
| *Clostridium perfringens* | Proper holding and cooling temperatures of foods; proper cooking times and temperatures; adequate cooking and avoidance of cross-contamination by unsanitary equipment or infected food handlers. |
| *Listeria monocytogenes* | Proper heat treatments; rigid environmental sanitation program; separation of raw and ready-to-eat production areas and product. |
| *Salmonella* spp | Proper heat treatment; separation of raw and cooked product; proper employee hygiene; fermentation controls; decreased water activity; withdrawing feed from animals before slaughter; avoiding exterior of hide from contacting carcass during skinning; antimicrobial rinses; scalding procedures; disinfecting knives. |
| *Staphylococcus aureus* | Employee hygiene; proper fermentation and pH control; proper heat treatment and post-process product handling practices; reduced water activity. |
| *Yersinia enterocolitica* | Proper refrigeration; heat treatments; control of salt and acidity; prevention of cross-contamination. |

TABLE 5.—EXAMPLES OF PREVENTIVE MEASURES FOR CHEMICAL HAZARDS

| Hazard | Preventive measure |
|---|---|
| Naturally-Occurring Substances | Supplier warranty or guarantee; verification program to test each supplier's compliance with the warranty or guarantee. |
| Added Hazardous Chemicals | Detailed specifications for each raw material and ingredient; warranty or letter of guarantee from the supplier; visiting suppliers; requirement that supplier operates with a HACCP plan; testing program to verify that carcasses do not have residues. |
| In-Process Chemicals | Identify and list all direct and indirect food additives and color additives; check that each chemical is approved; check that each chemical is properly used; record the use of any restricted ingredients. |

TABLE 6.—EXAMPLES OF PREVENTIVE MEASURES FOR PHYSICAL HAZARDS

| Hazard | Preventive measure |
|---|---|
| Foreign objects in raw materials | Supplier's HACCP plan; use of specifications, letters of guarantee; vendor inspections and certification; in-line magnets; screens, traps, and filters; in-house inspections of raw materials. |
| Foreign objects in packaging materials, cleaning compounds, etc | Supplier's HACCP plan; use of specifications, letters of guarantee; vendor inspections and certification; in-house inspections of materials. |
| Foreign objects introduced by processing operations or employee practices. | In-line metal detectors; visual product examinations; proper maintenance of equipment; frequent equipment inspections. |

TABLE 7.—SOME EXAMPLES OF REGULATORY LIMITS

| Hazard | Regulatory limit | Regulatory citation |
|---|---|---|
| *biological:* Microbial growth due to temperature abuse-Poultry Chilling. | All poultry must be chilled immediately after processing to a temperature of 40 °F or less. | § 381.66 |
| *chemical:* Excess chemicals contact product | Chemicals used are approved for the intended use and at appropriate amounts. | § 318.7 |
| *chemical:* Chemical hazard from packaging materials | Edible products must be packaged in container that will not adulterate product or be injurious to health. Packaging materials must be covered by a letter of guaranty. | § 317.24 |
| *biological:* Trichinae in pork | Products containing pork muscle tissue must be effectively heated, refrigerated, or cured to destroy any possible live trichinae. | § 318.10 |
| *biological:* Pathogens in ready to eat products | For destruction of pathogens that may survive a dry heat process. One of the time/temperature combinations for *cooked* beef, *roast* beef, and *cooked* corned beef; e.g., 143 °F\61.7 °C minimum temperature at minimum time of 6 minutes. | § 318.17 |
| *physical:* Extraneous material found on post chill examination of poultry carcasses. | Sampled carcasses observed for conformance with post chill criteria, including unidentified foreign material. | § 381.76 |

*Section III*

Table 8.—Red Meat (Beef) Slaughter Hazards and Controls Use of Information

This section contains examples of common process steps in beef slaughter. With each processing step, shown in the first column, you will find an ''X'' in the next three columns to tell you if there is a Biological hazard in column 2, a Chemical hazard in column 3, or a Physical hazard in column 4. Column 5 describes the hazard(s), and the last column lists some relevant controls or preventive measures. This table should be used in conjunction with the process flow diagram developed by your HACCP team for your plant's beef slaughter process.

TABLE 8.—RED MEAT SLAUGHTER: BEEF

| Red meat slaughter-beef: examples of processing steps | B | C | P | Description of biological, chemical, or physical hazards for the process steps | Controls or preventive measures |
|---|---|---|---|---|---|
| Receiving & Holding | | X | | —Residues present in edible tissues above tolerances. | —Residue certification presented for live animal(s). |
| Skinning | X | | | —Micro contamination of carcass surface due to contaminated outside hide surface—contamination of carcass from floor—cross-contamination. | —Skinning procedures are accomplished without hair or visible fecal contamination of the carcass.—Careful employee practices.—Udder and puzzle removal are accomplished without contamination of edible product. |
| Evisceration | X | | | —cross-contamination from broken viscera. | —Esophagus is tied to prevent escape of stomach contents—Bung is dropped with sanitized knife and bagged to prevent escape of feces—Viscera are removed intact. |
| Final Wash | X | | | —growth of pathogens through insufficient wash. | —Final wash: Temperature: 90–100°F Pressure: 345–2070 kpa (50–300 psi)—Steam Pasteurization: Temperature: 195°F or greater at surface Dwell time: 5–15 seconds in cabinet. |
| Chilling | X | | | —growth of pathogens | —Surface temperature ≤40°F as soon as possible—Carcasses spaced a minimum of 1 inch apart. |
| Receiving-Packaging Materials and Non Beef Supplies. | | X | | —contamination from deletious chemicals present in the packaging materials. | Letters of guarantee on file for all packaging materials/non-poultry supplies used by the establishment. |
| Storage-Non Beef Supplies | | | X | —contamination of stored packing materials/supplies from foreign material. | Examine to ensure no visible foreign material on/in non-poultry supplies or packaging materials. |

*Section IV*

Table 9.—Poultry Slaughter Hazards and Controls

Use of Information

This section contains examples of common process steps in poultry slaughter. With each processing step, shown in the first column, you will find an ''X'' in the next three columns to tell you if there is a Biological hazard in column 2, a Chemical hazard in column 3, or a Physical hazard in column 4. Column 5 describes the hazard(s), and the last column lists some relevant controls or preventive measures. This table should be used in conjunction with the process flow diagram developed by your HACCP team for your plant's poultry slaughter process.

TABLE 9.—POULTRY SLAUGHTER

| Poultry slaughter: examples of processing steps | B | C | P | Description of biological, chemical, or physical hazards for the process steps | Controls or preventive measures |
|---|---|---|---|---|---|
| Scalding | X | | | —contamination from scalding medium | —Fresh water input to achieve a minimum of 1 quart per bird<br>—Temperature of the scald water maintained at appropriate levels (e.g., ≥126°F)<br>—Maintain counterflow scalding unit function<br>—Post scald wash has sufficient pressure and volume to cover carcass with fresh (potable) water spray<br>—Overflow volumes are at required amounts |
| Offline Procedures | X | | | —cross contamination from intestinal contents/exudate. | Follow approved offline plant procedures for handling airsacculitis salvage and reprocessing for contamination (e.g., an airsac salvage program that transfers the carcasses to another station where the thigh, drumstick, wing tip, and first wing section are salvaged and washed with chlorinated water). |
| Final Wash | X | | | —growth of pathogens | —A final water wash with appropriate levels of chlorinated water (e.g. 20–50 ppm residual chlorine in the water).<br>—Sufficient water volume and pressure for equipment operation and sufficient dwell time in the final washer to remove visible contamination on internal and external surfaces of the carcass. |
| Chilling-Carcass | X | | | —growth of pathogens | Deep breast muscle temperature of carcass is ≤ 40°F within the specified time from slaughter for the class of poultry.<br>—Maintain an adequate chlorine level in the overflow water of in-line immersion chillers (e.g., 20–50 ppm residual chlorine in the incoming water).<br>—Maintain proper water flow rates (input/overflow) for continuous chillers per USDA requirements (not less than ½ gallon of fresh water per frying chicken with continuous overflow). |
| | | | X | —contamination from foreign material | Product entering (prechill) and exiting (postchill) the chiller system meets the criteria for defects per USDA requirements (e.g. the limits are not exceed for the number and size of extraneous materials found during the postchill examination-9 CFR § 381.76). |
| Chilling-Giblet/Neck | X | | | —growth of pathogens | —Temperature and fresh water input sufficient to meet USDA requirements for giblets and necks.<br>—Chlorination of giblet chiller water at appropriate levels for giblets and necks [e.g., giblets must be chilled to 40°F within 2 hours from removal from other viscera/fresh water intake not less than 1 gallon per 40 frying chickens processed-9 CFR § 381.66 (c)(5)]. |
| | | | X | —contamination from foreign material | —Visually free of hazardous foreign material.<br>—Defects on poultry giblet and necks meet USDA requirements (e.g., each carcass must be observed for conformance against pre and post chill criteria, including unidentified foreign materials-MPI Regulations 381.76). |

TABLE 9.—POULTRY SLAUGHTER—Continued

| Poultry slaughter: examples of processing steps | B | C | P | Description of biological, chemical, or physical hazards for the process steps | Controls or preventive measures |
|---|---|---|---|---|---|
| Cut-Up/Boning/Packaging/ Labeling | X | | | —growth of pathogens | Temperature of product does not exceed 55°F during further or second processing.<br>—Movement of product through these areas and into the cooler is timely and efficient.<br>—A mid-shift cleanup of the area(s) is performed if the room temperature is not maintained at or below 50°F.<br>—Packaging/labeling materials that come into direct contact with product are intact. |
| Receiving-Packaging Materials and Non Poultry Supplies. | | X | | —contamination from deleterious chemicals present in the packaging materials. | Letters of guarantee are on file for all packaging materials/non-poultry supplies used by the establishment. |
| Storage-Non Poultry Supplies | | | X | —contamination of stored packing materials/supplies from foreign material. | Examine to ensure no visible foreign material on/in non- poultry supplies or packaging materials. |

*Section V*

Table 10.—Red Meat (Swine) Slaughter Hazards and Controls

Use of Information

This section contains examples of common process steps in swine slaughter. With each processing step, shown in the first column, you will find an ''X'' in the next three columns to tell you if there is a Biological hazard in column 2, a Chemical hazard in column 3, or a Physical hazard in column 4. Column 5 describes the hazard(s), and the last column lists some relevant controls or preventive measures. This table should be used in conjunction with the process flow diagram developed by your HACCP team for your plant's swine slaughter process.

TABLE 10.—RED MEAT SLAUGHTER: SWINE

| Red meat slaughter-swine: Examples of processing steps | B | C | P | Description of biological, chemical, or physical hazards for the process steps | Controls or preventive measures |
|---|---|---|---|---|---|
| Scalding | X | | X | —contamination from scalding medium | Plant time/temperature limits for scalding (e.g., although it may vary with facilities, a temperature of 138 to 140°F is usually satisfactory).<br>—Carcasses should remain in scalding tanks long enough to loosen hair (excessive time or temperature results in carcass cooking). |
| | | X | .... | —contamination with chemicals. | —USDA-FDA approved chemical concentration not to exceed manufacturer's recommendations. |
| Dehairing | X | .... | .... | —contamination and growth of microorganisms due to breaking of the skin from overexposure to the dehairer. | —Time/temperature determined by plant-specific testing results to remove visible hair to an acceptable level without breaking skin. |
| Evisceration | X | .... | .... | —cross contamination from equipment/utensils.<br>—contamination from stomach, intestines, and/or bladder contents.<br>—contamination from employee handling | —Remove all viscera intact.<br>—Contaminated equipment will be clean and sanitized before being used again.<br>—Training program for all employees, to include personal hygiene, product handling procedures, and sanitary dressing procedures. |
| Trimming | X | .... | .... | Stick wound has not been removed. | Remove all visible stick-wound related defects. |
| Chilling | X | .... | .... | —growth of pathogens | —Cool surface temperature to 40° as soon as possible. |
| Receiving-Packaging Materials and Non Swine Supplies. | .... | X | .... | —contamination from deleterious chemicals present in the packaging materials. | Letters of guarantee are on file for all packaging materials/non-poultry supplies used by the establishment. |
| Storage-Non Swine Supplies | .... | | X | —contamination of stored packing materials/supplies from foreign material. | Examine to ensure no visible foreign material on/in non-poultry supplies or packaging materials. |

*Section VI*

Table 11.—Ingredient Hazards and Ingredient-Related Hazards

Use of Information

This section contains an alphabetical list of ingredients commonly used in making meat and poultry products. For each entry you will find the name of the ingredient in the first column, and an ''X'' in the next three columns to tell you if there is a Biological hazard in column 2, Chemical hazard in column 3, or Physical hazard in column 4. Column 5 describes the hazard(s), and the last column lists some relevant controls or preventive measures. This table should be used in conjunction with the list of ingredients developed by your HACCP team for the products produced by the process under consideration.

The HACCP team may find that a particular ingredient does not present the hazard identified in these tables. The presence or absence of a hazard can be influenced by the ingredient source and company. Also, *Ingredient Specifications,* provided by the supplier to the establishment, may give details on the material/ingredient being sold, including statements that the materials/ingredients are food grade and are free of harmful components. For example, the ingredient specifications for dried legumes might state that there will be fewer than 5 small rocks or stones per 10 pound bag and that no harmful pesticides were used in the growing process.

TABLE 11.—INGREDIENT HAZARDS

| Examples of ingredient | B | C | P | Description of biological, chemical, or physical hazard for the ingredient | Controls or preventive measures |
|---|---|---|---|---|---|
| Acidifiers | .... | X | .... | —toxicological effects if limits are exceeded. | —Ingredients purchased under a Letter of Guarantee.<br>—Ingredients purchased based on producer/provider ingredient specifications. |
| Anticoagulants | .... | X | .... | —toxicological effect if limits are exceeded. | —Ingredients purchased under a Letter of Guarantee.<br>—Ingredients purchased based on producer/provider ingredient specifications. |
| Antifoaming agents | .... | X | .... | —toxicological effect if limits are exceeded. | —Ingredients purchased under a Letter of Guarantee.<br>—Ingredients purchased based on producer/ provider ingredient specifications. |
| Antioxidants | .... | X | .... | —toxicological effect if limits are exceeded. | —Ingredients purchased under a Letter of Guarantee.<br>—Ingredients purchased based on producer/provider ingredient specifications. |
| Batter/Breading | X | .... | X | —growth of pathogens due to improper storage and handling.<br>—foreign material | —Temperature controls for use<br>—Ingredient specification sheet identifying the required parameters the ingredient must meet.<br>—Where applicable, ingredients must be pathogen-free. |
| Beef (fresh, frozen) | X | .... | .... | —growth of pathogens due to improper storage and handling. | —Product temperature must be 40 degrees F or less at receiving.<br>—Product must meet establishment purchase specifications.<br>—Product must be produced under a HACCP plan. |
| Binders/Extenders | .... | X | X | —foreign material | —Ingredients purchased under a Letter of Guarantee.<br>—Ingredients purchased based on producer/ provider ingredient specifications. |
| Bleaching agents | .... | X | .... | —toxicological effect if limits exceeded | —Ingredients purchased under a Letter of Guarantee.<br>—Ingredients purchased based on producer/ provider ingredient specifications. |
| Blood | X | .... | .... | —growth of pathogens from improper handling and storage. | —Ingredient specification sheet identifying the required parameters the ingredient must meet.<br>—Where applicable, ingredients must be pathogen-free.<br>—Meet appropriate temp. |
| Boneless beef | X | .... | X | —growth of pathogens due to improper handling and storage.<br>—foreign particle contamination, e.g., metal fragments or bone. | —Product temperature must be 40 degrees F or less at receiving.<br>—Product must meet establishment purchase specifications.<br>—Product must be produced under a HACCP plan.<br>—Visual examination of product for foreign materials. |

TABLE 11.—INGREDIENT HAZARDS—Continued

| Examples of ingredient | B | C | P | Description of biological, chemical, or physical hazard for the ingredient | Controls or preventive measures |
|---|---|---|---|---|---|
| Cooked beef | X | .... | X | —growth of pathogens due to improper handling and storage.<br>—foreign particle contamination, e.g., metal fragments or bone particles in boneless beef. | —Receiving temperature of product must be frozen or refrigerated at 40 degrees F or below.<br>—Product must be received from an approved supplier who produces the product under a HACCP plan.<br>—Visual examination of product for foreign materials upon receipt. |
| Cooked poultry | X | .... | X | —growth of pathogens due to improper handling and storage.<br>—foreign particle contamination, e.g., bone particles in boneless poultry. | —Receiving temperature of product must be frozen or refrigerated at 40 degrees F or below.<br>—Product must be received from an approved supplier who produces the product under a HACCP plan.<br>—Product must be organoleptically acceptable at receipt. |
| Cooked pork | X | .... | X | —growth of pathogens due to improper handling and storage.<br>—foreign particle contamination, e.g., bone particles in boneless pork. | —Receiving temperature of product must be frozen or refrigerated at 40 degrees F or below.<br>—Product must be received from an approved supplier who produces the product under a HACCP plan.<br>—Product must be organoleptically acceptable at receipt. |
| Coloring agents (natural) | .... | X | .... | —Toxicological effect if limits exceeded | —Ingredients purchased under a Letter of Guarantee.<br>—Ingredients purchased based on producer/provider ingredient specifications. |
| Coloring agents (artificial) | .... | X | .... | —Toxicological effect if limits exceeded | —Ingredients purchased under a Letter of Guarantee.<br>—Ingredients purchased based on producer/provider ingredient specifications. |
| Curing agents | .... | X | .... | —Toxico logical effect if limits exceeded | —Ingredients purchased under a Letter of Guarantee.<br>—Ingredients purchased based on producer/provider ingredient specifications. |
| Curing accelerators | .... | X | .... | —-toxicological effect if limits are exceeded. | —Ingredients purchased under a Letter of Guarantee.<br>—Ingredients purchased based on producer/provider ingredient specifications. |
| Dairy products | X | .... | X | —growth of pathogens due to improper handling and storage.<br>—foreign material | —Temperature control.<br>—Ingredient specification sheet identifying the required parameters the ingredient must meet.<br>—Where applicable, ingredients must be pathogen-free. |
| Eggs or egg products | X | .... | X | —growth of pathogens due to improper handling and storage.<br>—foreign particle contamination, e.g., shell particles in broken eggs. | —Temperature control.<br>—Ingredient specification sheet identifying the required parameters the ingredient must meet.<br>—Where applicable, ingredients must be pathogen-free. |
| Emulsifying agents | .... | X | .... | —toxicological effects if limits exceeded | —Ingredients purchased under a Letter of Guarantee.<br>—Ingredients purchased based on producer/provider ingredient specifications. |
| Flavoring agents | .... | X | .... | —toxicological effects if limits exceeded | —Ingredients purchased under a Letter of Guarantee.<br>—Ingredients purchased based on producer/provider ingredient specifications. |
| Fruits | .... | X | X | —contamination from agricultural chemicals.<br>—foreign material | —Ingredient specification sheet identifying the required parameters the ingredient must meet. |
| Honey | X | .... | X | —contamination from inherent microorganisms.<br>—foreign particle contamination, e.g., dirt, insect parts. | —Ingredient specification sheet identifying the required parameters the ingredient must meet. |
| Legumes (dry) | .... | .... | X | —foreign particle contamination, e.g., rocks. | —Ingredient specification sheet identifying the required parameters the ingredient must meet. |

TABLE 11.—INGREDIENT HAZARDS—Continued

| Examples of ingredient | B | C | P | Description of biological, chemical, or physical hazard for the ingredient | Controls or preventive measures |
|---|---|---|---|---|---|
| Mechanically deboned product | X | .... | X | —growth of pathogens due to improper handling and storage.<br>—foreign particle contamination, e.g., bone particles. | —Product temperature must be 40 degrees F or less at receiving.<br>—Product must meet establishment purchase specifications.<br>—Product must be produced under a HACCP plan. |
| Mold inhibitors | .... | X | .... | —toxicological effect if improper amounts used. | —Ingredient specification sheet identifying the required parameters the ingredient must meet. |
| Mushrooms | X | X | X | —contamination from inherent microorganisms.<br>—contamination from agricultural chemicals.<br>—foreign material | —Ingredient specification sheet identifying the required parameters the ingredient must meet.<br>—Where applicable, ingredients must be pathogen-free. |
| Nuts | X | X | X | —contamination from inherent microorganisms.<br>—contamination from agricultural chemicals.<br>—foreign particle contamination, e.g., broken shells. | —Ingredient specification sheet identifying the required parameters the ingredient must meet. |
| Packaging materials | .... | .... | X | —toxicological effects | —Use only FDA approved packaging materials.<br>— Each lot of packaging material must be accompanied by a Letter of Guarantee in which the manufacturer attests to compliance with FDA requirements. |
| Phosphates | .... | X | .... | —toxicological effect if limits are exceeded. | —Ingredients purchased under a Letter of Guarantee.<br>—Ingredients purchased based on producer/provider ingredient specifications. |
| Poultry (fresh, frozen) | X | .... | .... | —growth of pathogens due to improper handling and storage. | —Product temperature must be 40 degrees F or less at receiving.<br>—Product must meet establishment purchase specifications.<br>—Product must be produced under a HACCP plan. |
| Pork (fresh, frozen) | X | .... | .... | —growth of pathogens due to improper handling and storage. | —Product temperature must be 40 degrees F or less at receiving.<br>—Product must meet establishment purchase specifications.<br>—Product must be produced under a HACCP plan. |
| Proteolytic enzymes—Aspergillus oryzae, Aspergillus, Flavusoryzae group, Bromelin, Ficin, Papain. | .... | .... | .... | —toxicological effects if limits exceeded | —Ingredients purchased under a Letter of Guarantee.<br>—Ingredients purchased based on producer/provider ingredient specifications. |
| Partially defatted products | X | .... | X | —growth of pathogens due to improper handling and storage.<br>—foreign particle contamination, e.g., metal, plastic. | —Product temperature must be 40 degrees F or less at receiving.<br>—Product must meet establishment purchase specifications.<br>—Product must be produced under a HACCP plan. |
| Seafood (fresh, frozen) | X | X | .... | —growth of pathogens due to improper handling and storage.<br>—environmental contamination | —Product temperature must be 40 degrees F or less at receiving.<br>—Product must meet establishment purchase specifications.<br>—Product must be produced under a HACCP plan. |
| Spices/herbs—Sterilized, Unsterilized | X | .... | .... | —contamination from microorganisms inherent to the ingredient.<br>—contamination from agricultural chemicals.<br>—foreign material | —Ingredient specification sheet identifying the required parameters the ingredient must meet. |
| Sweeteners—Saccharin, Citric acid, Malic acid, Monoisopropyl citrate, Phosphoric acid, Monoglyceride citrate. | .... | .... | .... | —toxicological effects if limits exceeded | —Ingredients purchased under a Letter of Guarantee.<br>—Ingredients purchased based on producer/provider ingredient specifications. |

TABLE 11.—INGREDIENT HAZARDS—Continued

| Examples of ingredient | B | C | P | Description of biological, chemical, or physical hazard for the ingredient | Controls or preventive measures |
|---|---|---|---|---|---|
| Tenderizing agents | .... | X | .... | —toxicological effects if limits exceeded | —Ingredients purchased under a Letter of Guarantee.<br>—Ingredients purchased based on producer/provider ingredient specifications. |
| Variety meats | X | .... | .... | —growth of pathogens due to improper handling, storage, or cleaning. | —Product temperature must be 40 degrees F or less at receiving.<br>—Product must meet establishment purchase specifications.<br>—Product must be produced under a HACCP plan. |
| Vegetables | X | X | X | —growth of pathogens due to improper handling and storage.<br>—contamination from agricultural chemicals.<br>—foreign material | —Ingredient specification sheet identifying the required parameters the ingredient must meet. |

*Section VII*

Table 12.—Processing Hazards and Controls

Use of Information

This section contains a list of processing hazards and controls commonly used in making meat and poultry products. They are listed in alphabetical order. For each processing step, shown in the 1st column, you will find an ''X'' in the next three columns to tell you if there is a Biological hazard in column 2, Chemical hazard in column 3, or Physical hazard in column 4. Column 5 describes the hazard(s), and the last column lists some relevant controls or preventive measures. This table should be used in conjunction with the process flow diagram developed by your HACCP team for the products produced during the process under consideration.

TABLE 12.—PROCESSING STEP HAZARDS

| Processing steps | B | C | P | Description of biological, chemical, or physical hazards for the process steps | Controls or preventive measures |
|---|---|---|---|---|---|
| Acidifying (also see Pickling, Brining) | X | .... | .... | —survival of pathogens due to final pH>4.6. | —Shelf-stable non-heat treated acidified product must obtain a pH of 4.6 or lower. |
| Aging (Meats) | X | .... | .... | —growth/survival of pathogens from inappropriate storage temperatures and humidity (inadequate product water activity ($a_w$)).<br>—growth of pathogens due to rise in the pH due to development of surface molds. | —The temperature of the aging room will not exceed 40 degrees Fahrenheit.<br>—Product temperature does not exceed 40 degrees Fahrenheit throughout the aging process.<br>—The aging process will not exceed seven days. |
| Boning | X | .... | .... | —contamination by pathogens in product accumulations (e.g., cutting boards, conveyor belts, utensils and other equipment).<br>—cross-contamination of product by equipment/utensils contaminated with pathogens when cutting through a non-apparent lesion (e.g., abscesses).<br>—contamination from bones, cartilage/extraneous material. | —Careful employee practices to make sure that there is no contamination of the product.<br>—Equipment and utensils are washed and sanitized immediately when contaminated and each time the employee leaves the working station.<br>—All hot water sanitizers are maintained at 180 degrees Fahrenheit.<br>—Processing room temperature is maintained at 50 degrees Fahrenheit, or a midshift cleanup is performed within five hours after operations begin.<br>—A boneless beef re-inspection procedure will be established using specifications outlined by FSIS. |
| Cooling | X | .... | .... | —growth of pathogens due to improper temperatures.<br>—germination of spore-forming pathogens due to slow chilling (e.g., *C. perfringens*). | Cooked product will be cooled according to established procedures. |
| Cooking | X | .... | .... | —survival of pathogens due to improper procedures. | —Time/Temperature combinations are adequate to destroy the pathogens of concern. |

TABLE 12.—PROCESSING STEP HAZARDS—Continued

| Processing steps | B | C | P | Description of biological, chemical, or physical hazards for the process steps | Controls or preventive measures |
|---|---|---|---|---|---|
| Drying (Meat) | X | .... | .... | —bacterial growth due to inadequate control over time, temperature and humidity. | —A water activity will be specified that in conjunction with other barriers will inhibit growth of pathogenic microorganisms (e.g., for shelf stable sausage $A_w$ of 0.91 and a pH of 4.6). |
| Filling | X | .... | .... | —recontamination by pathogens in product accumulations.<br>—growth of pathogens due to temperature abuse. | —Product will be protected from contamination during the filling process, and product temperature/ time will be maintained at or below the maximum determined to inhibit growth of pathogenic microorganisms. |
| | .... | X | .... | —contamination from lubricants | —No lubricants or other chemical contaminants will be allowed in or on the product. |
| Formulation | X | .... | .... | —contamination by employee handling<br>—incorrect formulation<br>—contamination through damaged packages. | —Careful employee practices used at all times to make sure that there is no contamination of product.<br>—Ingredient packages will be clean and intact.<br>—Ingredients will be added to product according to requirements outlined 9CR § 318.7. |
| | .... | X | .... | —excessive addition of restricted ingredients/ additives could be toxic to the consumer. | —Restricted ingredients will be added to product according to requirements outlined in the 9CFR § 317.8. |
| Freezing (Meats) | X | .... | .... | —survival of parasites due to improper time/temperature application.<br>—growth of pathogens due to temperature abuse. | —Rapid cooling and freezing. |
| Grinding | X | .... | .... | —contamination by employee handling<br>—recontamination by pathogens in product accumulations. | —Careful employee practices to make sure that there is no contamination of product.<br>—Product will not be allowed to accumulate at the end of the grinder.<br>—The temperature of the grinding room will be maintained at 50 degrees Fahrenheit. |
| Grinding | .... | X | .... | —contamination from lubricants | —Food grade lubricants will be used on areas of the machinery where a potential for product contamination exists. |
| | .... | .... | X | —contamination from extraneous material | —All boneless product will be re-inspected before being loaded into the grinder. |
| Handling and Inspecting of Empty Containers and Packaging Materials. | X | X | X | —recontamination through damaged or soiled containers/packaging material. | —Packaging materials and empty containers will be protected from contamination during their storage and handling.<br>—No materials or containers that appear to be contaminated with hazardous foreign material will be used. |
| Mechanical Separating | X | .... | .... | —growth of pathogens | —Product holding and cooling requirements outlined in 9CFR 318.18 will be followed. |
| | | | X | —contamination from bone, cartilage fragments.<br>—contamination from extraneous material | —The finished product will meet the standards outlined in 9CFR 319.5 for bone particles and calcium. |
| Packaging (also see Modified Atmosphere Packaging, Vacuum Packaging Seaming, Sealing). | X | X | X | —contamination from packaging material<br>—contamination through damaged containers. | —Closure and/or machine specifications sufficient to ensure adequate barrier formation. |
| | .... | .... | X | | —No detectable foreign material will be allowed in or on the product or immediate product containers. |
| Peeling | X | .... | .... | —contamination by pathogens in product accumulations.<br>—contamination from employee handling | —Careful employee practices to make sure that there is no contamination of product.<br>—Product will not be allowed to accumulate in/on peeling equipment. |
| | .... | .... | X | —contamination from harmful extraneous material. | —Peeling equipment will be maintained in a proper operating condition. No foreign material in the finished product. |

TABLE 12.—PROCESSING STEP HAZARDS—Continued

| Processing steps | B | C | P | Description of biological, chemical, or physical hazards for the process steps | Controls or preventive measures |
|---|---|---|---|---|---|
| Receiving | X | .... | .... | —contamination through damaged containers.<br>—growth of pathogens due to inappropriate storage conditions (temperature, humidity).<br>—growth of pathogens due to temperature abuse.<br>—contamination from receiving equipment (pumps, hoses). | —Product must be received in sound containers and at temperatures appropriate for the type of product. |
| | .... | X | .... | —cross-contamination from non-food chemicals. | —Product must be received in sound containers and be accompanied by a letter of guarantee from the supplier if such letter is not on file. |
| | .... | X | .... | —contamination from hazardous extraneous material (wood, nails from pallets, plastic pieces). | —Product must be received in sound containers and be accompanied by a letter of guarantee from the supplier if such letter is not on file. |
| Retorting | X | .... | .... | —inadequate application of scheduled process. | —A thermal process specific to the product, container type and size, and retorting system must be in use. The initial product temperature and any critical factors specified for the thermal process must also be controlled. Specified retort come up procedures will be followed. |
| Reworking | X | .... | .... | —contamination by employee handling ...<br>—contamination by pathogens in product accumulations. | —Careful employee practices to make sure that there is no contamination of product.<br>—Room temperature of storage coolers will not exceed 40 degrees Fahrenheit. |
| | .... | .... | X | —contamination foreign material ..... | —Careful employee practices to make sure that there is no contamination of product. |
| Shipping | X | .... | .... | —growth due to improper temperatures | —Product will not be shipped unless it is 40 degrees Fahrenheit or less.<br>—Product will not be loaded into transport vehicles if the trailer temperature exceeds 40 degrees Fahrenheit. |
| | .... | .... | X | —contamination from hazardous extraneous material through damaged packages. | —All product packages will be intact before shipping.<br>—All transport vehicles will be cleaned after each use and before loading of product. |
| Thawing | X | .... | .... | —growth of pathogens due to improper temperatures. | —Thawing Room temperature will not exceed 50 degrees Fahrenheit. |

*Section VIII*

REFERENCES


Hazard Analysis Critical Control Point Systems

Agriculture Canada. Food Safety Enhancement Program—Implementation Manual. Nepean, Ontario, Canada.

HACCP: The Hazard Analysis and Critical Control Point System in the Meat and Poultry Industry. 1994. American Meat Institute Foundation. Washington, D.C.

International Commission on Microbiological Specification for Foods. 1989. ''Microorganisms in Foods 4. Application of hazard analysis and critical control point (HACCP) system to ensure microbiological safety and quality.'' Blackwell Scientific Publications, Boston.

National Advisory Committee on Microbiological Criteria for Foods (NACMCF).

March 20, 1992—Hazard Analysis and Critical Control Point System.

Int. J. Food Micr. 16: 1–23.

National Advisory Committee on Microbiological Criteria for Foods (NACMCF). June 1993—Report on Generic HACCP for Raw Beef. Food Micr. 10: 449–488.

Pierson, M.D. and Corlett, D.A., Jr. ed. 1992. ''HACCP/Principles and Applications.'' Van Nostrand Reinhold.

Stevenson, K.E. ed. 1993. ''HACCP-Establishing Hazard Analysis Critical Control Point Programs.'' A Workshop Manual. The Food Processors Institute. Washington, D.C.

Tompkin, R.B. 1990. The Use of HACCP in the Production of Meat and Poultry Products. J. of Food Protect. 53(9): 795–803.

Tompkin, R.B. 1995. The use of HACCP for producing and distributing processed meat and poultry products. In Advances in Meat Research. Volume 10. Hazard Analysis Critical Control Point (HACCP) in Meat, Poultry and Seafoods. Chapman & Hall (In Press).

*Foodborne Illnesses*

Bean, N.H. and Griffin, P.M. 1990. Foodborne disease outbreaks in the United States, 1973–1987: Pathogens, vehicles, and trends. J. Food Protect. 53: 804–817.

Bean, N.H. and Griffin, P.M. 1990. Foodborne disease outbreaks, 5-year summary, 1983–1987. J. Food Protect. 53: 711.

Council for Agricultural Science and Technology. ''Risks Associated with Foodborne Pathogens.'' February 1993.

Oblinger, J.L., ed. 1988. Bacteria Associated with Foodborne Illnesses, A Scientific Status Summary by the Institute of Food Technologists Expert Panel on Food Safety and Nutrition. Food Technol. 42(4).

Padhye, N.V.; Doyle, M.P. 1992. E. Coli O157:H7 Epidemiology, pathogenesis, and methods for detection in food. J. Food Prot. 55:55–565.

Schuchat, A., Swaminathan, B. and Broome, C.V. 1991. Epidemiology of human listeriosis. Clin. Microbiol. Rev. 4: 169–183.

Tauxe, R.V., ''Epidemiology of *Camplyobacter jejuni* infections in the United States and other Industrialized Nations,'' In Nachamkin, Blaser, Tompkins, ed. *Camplyobacter jejuni:* Current Status and Future Trends, 1994, chapter 2, pages 9–19.

Tauxe, R.V., Hargett-Bean, N., Patton, C.M. and Wachsmuth, I.K. 1988. Campylobacter isolates in the United States, 1982–1986. In, CDC Surveillance Summaries, June 1988. MMWR 37 (No. SS–2) : 1–13.

Todd, E. 1990. Epidemiology of Foodborne Illness: North America. The Lancet 336:788.

*Microbiological, Chemical, and Physical Hazards*

Corlett, D.A., Jr. and R.F. Steir. 1991. Risk assessment within the HACCP system. Food Control 2:71–72.

Environmental Protection Agency. 1992. Tolerances for Pesticides in Foods. Title 40, Code of Federal Regulations, Part 185. U.S. Government Printing Office, Washington, DC.

FDA. 1989. The Food Defect Action Levels. FDA/CFSAN. Washington, DC.

FDA. 1994. Fish and Fishery Products Hazards and Control Guide—Get Hooked on Seafood Safety. Office of Seafood, Washington, DC.

HACCP: The Hazard Analysis and Critical Control Point System in the Meat and Poultry Industry. 1994. American Meat Institute Foundation, Washington, DC.

International Commission on Microbiological Specification for Foods. 1989. ''Microorganisms in Foods 4. Application of hazard analysis and critical control point (HACCP) system to ensure microbiological safety and quality.'' Blackwell Scientific Publications, Boston.

Pierson, M.D. and Corlett, D.A., Jr. ed. 1992. ''HACCP/Principles and Applications.'' Van Nostrand Reinhold.

Stevenson, K.E. ed. 1993. ''HACCP-Establishing Hazard Analysis Critical Control Point Programs.'' A Workshop Manual. The Food Processors Institute. Washington, DC.

USDA, 1994. Domestic Residue Data Book: 1993. USDA, FSIS, Washington, DC.

USDA, 1994. List of Propriety Substances and Nonfood Compounds Authorized for Use under USDA Inspection and Grading Programs. USDA, FSIS, Washington, DC.

USDA, 1995. National Residue Program Plan: 1995. USDA, FSIS, Washington, DC.

*Internet Home Pages*

Agriculture Canada/http://aceis.agr.ca

Food Law Sites/http://www.fsci.umn.edu/FoodLaw/foodlaw.html

HACCP95/http://www.cvm.uiuc.edu/announcements/haccp95/haccp95.html

Center for Disease Control/http://fftp.cdc.gov/pub/mmwr/MMWRweekly

Material Safety Data Sheets/http://listeria.nwfsc.noaa.gov/msds.html

U.S. Food and Drug Administration/http://vm.cfsan.fda.gov/list.html Bad Bug Book

U.S. Department of Agriculture/http://www.usda.gov

## Appendix E—FSIS Sample Collection Guidelines and Procedure for Isolation and Identification of Salmonella from Raw Meat and Poultry Products

### *Introduction*

This sampling protocol has been prepared to support the Pathogen Reduction/HACCP Regulation. FSIS will be conducting a *Salmonella* testing program in support of this regulation. The regulation does not require establishments to conduct their own testing for *Salmonella*. However, for those who choose to conduct their own *Salmonella* testing program, the protocol outlined in this document provides detailed instruction for sample collection and analysis that are the same as those used in the FSIS *Salmonella* testing program for raw meat and poultry products.

This protocol incorporates the use of a non-destructive sampling technique for sample collection of raw beef and swine carcasses. These techniques have been evaluated by the Agricultural Research Service and have been designed to give comparable results to the FSIS Nationwide Microbiological Baseline Data Collection Programs' excised tissue samples. We are continuing to improve the sponging techniques and welcome comments. This technique will be closely monitored during the first year of prevalence phase *Salmonella* testing. Carcass sampling for broiler and turkey carcasses remain the nondestructive whole bird rinse which was used in the Baseline Programs. Ground product sampling involves collecting approximately ½ pound of the product.

The analytical methods section of this protocol details the cultural procedures currently in use by FSIS/USDA for the examination of raw meat and poultry products for *Salmonella*. Any screening method under consideration for *Salmonella* testing must meet or exceed the following performance characteristics: sensitivity = ≥97%, specificity ≥96%, false-negative rate = 3%, false-positive rate ≤4%.

### *Guidelines for Sample Collectors/Microbiologists*

#### Pre-Sampling Preparation

Prior to collecting samples, the individual designated for sample collection should compile a written establishment-specific sample collection protocol for microbiological analysis. This protocol should include a check list for tasks to be performed prior to sample collection, materials needed for sample collection, random selection procedures, where the samples will be analyzed (on-site versus off-site), and other information that will aid the sample collector. Sampling supplies, such as sterile gloves, sterile sampling solutions, hand soap, sanitizing solution, etc., as well as specific materials needed for sampling different carcass types (i.e., specimen sponges in bags, if sampling cattle or swine carcasses), will need to be assembled.

For cattle and hog carcass sampling, a template will be needed to mark off the area to sample (Figure 1). The template can be made of metal or aluminum foil, brown paper, etc. From a sheet larger than the area to be sampled, cut out a 10 cm (3.94 inches) x 10 cm square for sampling cattle or a 6 cm x 10 cm rectangle for swine carcass sampling. If a reusable metal template is used, it will need to be sanitized with an approved sanitizing solution (e.g. hypochlorite (bleach) solution or alcohol). However, the template needs to be dry before placing it on the carcass. Aluminum foil or paper templates can be used once and discarded. The foil for the template should be stored in a manner to prevent contamination. Since the area enclosed by the template will be sampled, take care not to touch this area with anything other than the sampling sponge. Using dirty or contaminated material may lead to erroneous results. If an autoclave is available, paper or aluminum foil templates can be wrapped in autoclavable paper and sterilized.

The sterile sampling solution, Buffered Peptone Water (BPW), can be stored at room temperature. However, at least one day prior to sample collection, check solutions for absence of cloudiness and/or turbidity and place the number of containers of sampling solution (BPW) that will be needed for the next day's sampling in the refrigerator. DO NOT use solutions that are cloudy, turbid, or contain particulate matter.

To obtain the most accurate results, samples should be analyzed as soon after collection as possible. However, if samples must be transported to an off-site laboratory, the samples need to be

maintained at refrigeration temperatures until transport, then shipped refrigerated via an overnight delivery service to the laboratory performing the analysis. Samples analyzed off-site must be picked up by the overnight courier the SAME calendar day the sample is collected. The sample must arrive at the laboratory no later than the day after the sample is collected. Samples shipped to an outside laboratory must be analyzed no later than the day after collection. The following section gives information on shipping containers and transporting samples to off-site facilities.

*Shipping Containers and Coolant Packs*

It is important that samples fit easily into the shipping so that the sample bags do not break.

Correct use of the refrigerant gel-ice packs and proper packing of the shipping container are necessary so that samples arrive at the laboratory at an acceptable temperature. Frozen samples or samples which are too warm are not considered valid and must not be analyzed. Some bacteria may be damaged by temperatures that are too cold. Temperatures that are too warm can allow bacteria to reproduce. Maintaining samples at improper temperatures may cause inaccurate sample results.

The sample should be kept refrigerated, NOT FROZEN, in the shipping container prior to pickup by the courier. The shipping container, itself, should not be used as a refrigerator. However, multiple samples (if needed) for that day may be stored in the open shipping container in the cooler or refrigerator.

Random Selection of Carcasses or Ground Product for Sampling

Samples are to be taken randomly. There are different methods of selecting the specific carcass for sampling that could be used but all require the use of random numbers. Methods could include: using random number tables, drawing cards, using calculator- or computer-generated random numbers, etc. When selecting the random numbers, use the method(s) currently in use at the establishment for other sampling programs, if other programs are currently underway.

The carcass or ground product for sampling must be selected at random from all eligible carcasses. If multiple lines exist, randomly select the line for sample collection for that interval. Repeat the random selection process for the next sampling interval. Each line should have an equal chance of being selected at each sampling interval.

*Cattle Carcass Selection*

The half-carcasses eligible for sampling should be selected from those in the cooler 12 or more hours after slaughter. Both the ''leading'' and ''trailing'' sides of a carcass should have an equal chance of being selected. NOTE: If more than one shift is operating at the plant, the sample can be taken on any shift, provided the following requirements are met:

Selection of TIME: Determine the times that carcasses chilled for 12 or more hours will be on hand. Then randomly select a time for collecting samples. If samples are shipped off-site, then take into account that the delivery service may have limitations on pickup times.

Selection of COOLER SITE: Select a safe and accessible site in the cooler for random selection of the half-carcass. This site may be located at the transfer chain, grading chain, or a rail that contains carcasses that have been chilled 12 hours or more.

Selection of HALF–CARCASS: At the random time selected, identify a half-carcass (selected by your random number method) from the predetermined point along the chain (selected cooler site) and then count back five (5) half-carcasses and select the next half-carcass (carcass) for sampling. The reason for counting back five half-carcasses is to avoid any possible bias during selection.

*Swine Carcass Selection*

The carcasses eligible for sampling should be selected from those in the cooler 12 or more hours after slaughter. Every carcass should have an equal chance of being selected.

Note: If more than one shift is operating at the plant, the sample can be taken on any shift, provided the following requirements are met:

Selection of TIME: Determine the times that carcasses chilled for 12 or more hours will be on hand. Then randomly select a time for collecting samples. If samples are shipped off-site, then take into account that the delivery service may have limitations on pickup times.

Selection of COOLER SITE: Select a safe and accessible site in the cooler for random selection of the carcass. This site may be located at the transfer chain, or a rail that contains carcasses that have been chilled 12 hours or more. If there are multiple sites of the same kind, select one at random.

Selection of CARCASS: At the random time selected, identify a carcass (selected by your random number method) from the predetermined point along the chain and then count back five (5) carcasses and select the next carcass for sampling. The reason for counting back five carcasses is to avoid any possible bias during selection.

*Poultry Carcass Selection*

The poultry carcasses will be selected at random after chilling, at the end of the drip line or last readily accessible point prior to packing/cut-up. A WHOLE carcass is required, that is, one that has not been trimmed.

Note: If more than one shift is operating at the plant, the sample can be taken on any shift, provided the following requirements are met:

Selection of TIME: Determine the times that chilled carcasses will be on hand, then randomly select a time for collecting samples. If samples are shipped off-site, then take into account that the delivery service may have limitations on pickup times.

Selection of CHILLER: If more than one chiller system is in operation at the time of sample collection, the chill tank from which the sample is selected must be randomly selected.

Selection of POULTRY CARCASS: At the random time, identify a carcass (selected by your random number method) from the predetermined point, and then count back five (5) carcasses and select the next carcass for sampling. Exception: If the fifth carcass is not a WHOLE (untrimmed) bird, count back an additional five carcasses for sample selection. Remember: Each carcass must have an equal chance of being selected. The reason for counting back five carcasses is to avoid any possible bias during selection.

*Raw Ground Product Selection (Beef, Pork, Chicken, Turkey)*

Raw ground product samples will be randomly selected and collected after the grinding process and, if possible before any addition of spices or seasonings, but prior to final packaging.

Note: If more than one shift is operating at the plant, the sample can be taken on any shift, provided the following requirements are met:

Selection of TIME: Determine the times that raw ground product will be produced, then randomly select a time for collecting samples. Take into account that the overnight delivery service may have limitations on pickup times, for determining sample collection time.

Selection of GRINDER: If more than one grinder is in operation at the time of sample collection, the grinder from which the sample is selected must be randomly selected.

Aseptic Techniques/Sampling

Extraneous organisms from the environment, hands, clothing, sample containers, sampling devices, etc., may lead to erroneous analytical results. Stringent requirements for microbiological analysis are necessary, therefore, use of aseptic sampling techniques and clean sanitized equipment and supplies are of utmost importance. The following information gives general techniques for aseptic techniques that are routinely used during sample collection for microbiological analysis.

There should be an area designated for preparing samples, etc. A stainless steel, wheeled cart or table would be useful during sampling. A small tote or caddy could be could be easily transported to the location of sampling and used for carrying supplies, supporting sample bags when adding sterile solutions to sample bags, etc.

Sterile gloves should be used for collecting samples. The only items which may contact the external surface of the glove are the exposed sample being collected and/or the sterile sample utensil (specimen sponge). Keep in mind that the outside surfaces of the sample container are not sterile. Do not handle the inside surface of the sterile sample containers. Do not touch anything else. The following procedure for putting on sterile gloves can be followed when collecting samples:

(a) Peel open the package of sterile gloves from the top without contaminating (touching, breathing on, contacting, etc.) the exterior of the gloves.

(b) Remove a glove by grasping it from the wrist-side opening inner surface which is folded. Avoid any contact with the outer surface of the glove. Insert the washed and sanitized hand into the glove, taking care not to puncture the glove or touch the outside surface of the glove.

(c) Next, follow the same procedure for the hand you will use to physically handle the sample, using care not to contaminate the outer surface of the glove.

(d) If at any time you are concerned that a glove may be contaminated, discard it and begin again with Step (a) above.

Preparation for Sample Collection

Prior to collecting samples, review steps for sample collection, random selection procedure, etc.

At least one or more days prior to sample collection, check sampling solution (BPW) for cloudiness/turbidity and refrigerate if not cloudy or turbid. If shipping samples to off-site facility, place coolant packs in freezer then pre-chill open shipping in cooler/refrigerator.

On the day of sampling, gather all sample collection bags, sterile gloves, sanitizer, hand soap, sterile solutions for sampling, and specific materials listed under the *Materials* section of the sample collection section for the type of carcass to be sampled.

Label the sample bags before starting sampling procedure. Use permanent ink. If you are using paper labels, it is important that the label be applied to the bag at normal room temperature; it will not stick if applied in the cooler.

Outer clothing (frocks, gloves, head gear, etc.) worn in other areas of the plant should be removed before entering the sampling area or preparing to collect samples. Replace outer clothing removed earlier with clean garments (i.e. laboratory coat) that have not been directly exposed to areas of the plant outside of the sampling area.

Sanitize the sample work area surfaces by wiping with a clean disposable cloth or paper towel dipped in a freshly prepared 500 ppm sodium hypochlorite solution (0.05% sodium hypochlorite) or other approved sanitizer which provides an equivalent available chlorine concentration. The sample work area surfaces must be free of standing liquid before sample supplies and/or product containers are placed on them.

Before sampling, thoroughly wash and scrub hands to the mid-forearm. Use antibacterial hand soap. If available, this should include a sanitizer at 50 ppm equivalence available chlorine. Dry the hands using disposable paper towels.

Specific Sample Collection Procedures

Raw Ground Product

*Materials*

1. 2 sterile ziplock-type or stomacher bags or equivalent.
2. Sterile gloves.
3. Plastic cable-tie-wrap or thick rubber band for securing bag.

*Collection*

Ensure that all supplies are on hand and readily available. Use the predetermined random selection procedure to select sample. Samples of raw ground product will be collected after the grinding process, and, if possible, before the addition of any spices or seasonings, but prior to final packaging.

1. Put on sterile gloves.
2. Aseptically collect approximately ½ pound of ground product, if possible, before the addition of any spices or seasonings, but just prior to final packaging. (Sample will be about the size of an orange.) Use the sterile sampling bag, taking care not to contaminate the inside of the bag with your gloved hand.
3. Close the bag tightly by twisting the top and securing it with the plastic cable-tie-wrap or rubber band or securely closing the ziplock-type bag.
4. Place bagged sample inside a second bag and close the outer bag tightly.
5. (a) If samples are to be analyzed at an ON–SITE LABORATORY, begin sample preparation for analysis.

(b) If samples are to be analyzed at an OUTSIDE (OFF–SITE) LABORATORY, follow the procedure in the Sample Shipment section.

Cattle Surface Sample Collection Procedure

*Materials*

1. Sterile specimen sponge in sterile Whirl-Pak® bag or equivalent
2. 10 ml sterile Buffered Peptone Water (BPW)
3. Sterile ziplock-type or stomacher bag
4. Template for a 100 $cm^2$ sampling area
5. Sterile gloves
6. Wheeled ladder, sampling platform, or step ladder
7. Sanitizing solution
8. Small tote or caddy for carrying supplies

*Collection*

A sterile, moistened sampling sponge (which usually come pre-packaged in a sterile bag) will be used to sample all three sites on the swine carcass (ham, belly, and jowls—see Figure 3). It is important to swab the sampling areas in the order of least to most contaminated to avoid spreading any contamination on the carcass. Therefore, swab sampling areas in the sequence indicated in this protocol. Use predetermined random selection procedures for selecting carcass to be sampled. Remember: samples will be collected from carcasses in the cooler 12 hours or more after slaughter. Nondestructive surface sampling will be conducted as follows:

1. Ensure that all bags have been pre-labeled and all supplies are on hand, including the sampling template. (An assistant may be helpful during the sampling process.)
2. Position the wheeled ladder, sampling platform, or step ladder near the carcass so the rump sample area (Figure 2) is within easy reach from the ladder.
3. IF a reusable template is used, have the assistant immerse the sampling

template in a sanitizing solution for at least 1–2 minutes. Just prior to taking the first sample on the carcass, have the assistant put on a pair of gloves (taking care not to contaminate the outer surface of the glove with fingers) and retrieve the sampling template from the sanitizing solution. Shake excess solution from utensil, then protect the portion of the template that will contact the carcass from contamination.

4. Locate the flank, rump, and brisket sampling sites using illustrations and directions in Figure 2 (cattle carcass sampling locations).

5. To hydrate the sponge, open the sponge bag. Remove cap from sterile BPW bottle, being careful not to touch the bottle opening. Carefully pour the contents of the sterile BPW bottle (10 ml) into the sponge bag to moisten the sponge.

6. Close the top of the bag. Use hand pressure from the outside of the bag and carefully massage the sponge until it is FULLY HYDRATED (moistened).

7. With the bag still closed, carefully push the moistened sponge to the upper portion of the bag orienting one narrow end of the sponge up toward the opening of the bag. Do NOT open the bag or touch the sponge with your fingers.

8. Open the bag containing the sponge, being careful not to touch the inner surface of the bag with your fingers. The wire closure at the top of the bag should keep the bag open. Set bag aside.

9. Put on sterile gloves.

10. Carefully remove the moistened sponge from the bag with your sampling hand. Take care to avoid touching the surfaces of the sampling sponge.

11. With the other hand, retrieve the template by the outer edge taking care to avoid contaminating the inner edges of the sampling area of the template.

12. Locate the flank sampling area (Figure 2) and place template over this location.

13. Hold the template in place with one gloved hand. Take care not to contaminate the enclosed sampling area with your hands.

14. With the other hand, wipe the sponge over the entire enclosed area (10 cm×10 cm) for the sample for a total of approximately 10 times in the vertical and 10 times in the horizontal directions. The pressure for swabbing would be as if you were removing dried blood from the carcass. However, the pressure should not be too hard as to crumble or destroy the sponge. (Note: The template may need to be ''rolled'' from side to side during swabbing since the surface of the carcass is not flat. This ensures that the 100 $cm^2$ area is enclosed while swabbing.)

15. Repeat steps 13–15 for the brisket area, using the SAME side or surface of the sponge used to swab the flank sampling area.

16. After swabbing the brisket area, transfer the template to the same hand holding the sponge. Do not contaminate the inner edges of the sampling area of the template.

17. Climb the ladder or platform, holding onto the handrail with the hand NOT used to perform swabbing. Once at a convenient and safe height for sampling the rump, transfer template back to ''climbing'' hand (hand used to hold onto the rail while climbing the ladder), taking care not to contaminate the inner edges of the sampling area of the template. Avoid contaminating your sampling hand.

18. Repeat steps 13–15 for the rump area, using the ''clean'' surface or side (the side that was NOT previously used to swab the flank/brisket areas).

19. After swabbing the rump area, carefully place the sponge back in the sample bag, taking care not to touch the outside of the sponge to the outside of the sample bag.

20. While holding the handrail, climb down from the ladder.

21. Expel excess air and fold the top edge of the bag containing the sponge 3 or 4 times to close. Secure the bag by folding the attached wire tie back against the bag.

22. (a) If samples are to be analyzed at an ON-SITE LABORATORY, begin sample preparation (ANALYTICAL METHODS section)

(b) If samples are to be analyzed at an OUTSIDE (OFF-SITE) LABORATORY, follow procedure in the Sample Shipment section.

Swine Surface Sample Collection Procedure

*Materials*

1. Sterile specimen sponge in sterile Whirl-Pak® bag or equivalent
2. 10 ml sterile Buffered Peptone Water (BPW)
3. Sterile Ziplock-type or stomacher bag
4. Template for a 100 $cm^2$ sampling area
5. Sterile gloves
6. Wheeled ladder, sampling platform, or step ladder
7. Sanitizing solution
8. Small tote or caddy for carrying supplies

*Collection*

Read the sections under Pre-sampling Preparation and Preparation for Sample Collection before beginning the sampling procedure. A sterile, moistened sampling sponge (which usually come pre-packaged in a sterile bag) will be used to sample all three sites on the swine carcass (ham, belly, and jowls—see Figure 3). It is important to swab the sampling areas in the order of least to most contaminated to avoid spreading any contamination on the carcass. Therefore, swab sampling areas in the sequence indicated in this protocol. Use predetermined random selection procedures for selecting carcass to be sampled. Remember: samples will be collected from carcasses in the cooler 12 hours or more after slaughter.

Nondestructive surface sampling will be conducted as follows:

1. Ensure that all supplies are on hand. (An assistant may be helpful during the sampling process.)

2. Position the wheeled ladder, sampling platform, or step ladder near the carcass so the ham sample area (Figure 3) is within easy reach from the ladder.

3. Immerse the sampling template in a sanitizing solution for at least 1–2 minutes. Just prior to swabbing the first sampling site on the carcass (step 1), retrieve the sampling template from the hypochlorite sanitizing solution. Shake excess solution from utensil, then protect the portion of the template (especially the inner edges of the sampling area) that will contact the carcass from contamination.

4. Locate the ''belly'', ham, and jowl sampling sites using illustrations and directions in Figure 3 (swine carcass sampling locations).

5. Open the sponge bag by holding the bag at one corner by the wire closure (which is usually colored yellow) then tear off the clear, perforated strip at the top of the bag. (Do not remove or tear off the wire closures). Next, pull apart the two small white tabs on either side of the bag to open the mouth of the bag.

6. Remove cap from sterile BPW tube, being careful not to touch the bottle opening. Carefully pour the entire contents of the BPW bottle (10 ml) into the sponge bag to moisten the sponge.

7. Close the top of the bag by pressing the wire closures together. Use hand pressure from the outside of the bag and carefully massage the sponge until it is FULLY HYDRATED (moistened).

8. With the bag still closed, carefully push the moistened sponge to the upper portion of the bag positioning one narrow end of the sponge up toward the opening of the bag. The whole sponge should still be inside the bag.

9. Open the top of the bag containing the sponge, being careful not to touch the inner surface of the bag with your fingers. The wire closure at the top of

the bag should keep the bag open. Set bag aside.

10. Put on a pair of sterile gloves.

11. Carefully remove the moistened sponge from the bag with your sampling hand. Take care not to touch the surfaces of the sampling sponge intended for sampling with sterile glove.

12. With the other hand, retrieve the template by the outer edge, taking care not to contaminate the inner edges of the sampling area of the template.

13. Locate the ''belly'' sampling area (Figure 2) and place the template over this location.

14. Hold the template in place with one gloved hand (Remember, only the sponge should touch the sampling area. Take care not to contaminate this area with your hands).

15. With the other hand, wipe the sponge over the entire enclosed area (10 cm × 10 cm) for the sample for a total of approximately 10 times in the vertical and 10 times in the horizontal directions. The pressure for swabbing would be as if you were removing dried blood from the carcass. However, the pressure should not be too hard as to crumble or destroy the sponge. (Note: The template may need to be ''rolled'' from side to side during swabbing since the surface of the carcass is not flat. This ensures that the 100 $cm^2$ area is enclosed while swabbing.)

16. After swabbing the ''belly'' area, transfer the template to the same hand that is holding the sponge. Do not contaminate the inner edges of the sampling area of the template.

17. Climb the ladder or platform, holding onto the handrail with the hand not used for sampling. Once at a convenient and safe height for sampling the ham, transfer template back to the ''climbing'' hand (hand used to hold onto the rail while climbing the ladder), taking care not to contaminate the inner edges of the template. Avoid contaminating your sampling hand.

18. Repeat steps 13–15 for the ham sampling area, using the SAME surface of the sponge used to swab the ''belly'' area.

19. After swabbing the ham area, carefully place the template back to the same hand that is holding the sponge. Do not contaminate the inner edges of the sampling area of the template.

20. While holding the handrail with the hand not used for sampling, climb down from the ladder.

21. Transfer the template back to the ''climbing'' hand (hand used to hold onto the rail while descending the ladder), taking care not to contaminate the inner edges of the template.

22. Repeat steps 13–15 for the the jowl area, using the ''clean'' surface or side (the side that was NOT previously used to swab the ''belly''/ham areas).

23. After swabbing the jowl area, carefully place the sponge back into the sponge bag. Do not touch the surface of the sponge to the outside of the sponge bag.

24. Press wire closures on the sponge bag together, expel the excess air, then fold over the top of the bag 3 or 4 times. Close the bag with attached wire by bending the wire tie back against the bag to secure it.

25. (a) If samples are to be analyzed at an ON-SITE LABORATORY, begin sample preparation (ANALYTICAL METHODS section).

(b) If samples are to be analyzed at an OUTSIDE (OFF-SITE) LABORATORY, follow procedure in the Sample Shipment section.

Whole Chicken Carcass Rinse Sampling Procedure

*Materials*

1. 2 Sterile 3500 ml stomacher-type bags or equivalent
2. 400 ml sterile Buffered Peptone Water (BPW)
3. Plastic cable-tie wraps or thick rubber bands or equivalent
4. Sterile gloves

*Collection*

Read the sections under Pre-sampling Preparation and Preparation for Sample Collection before beginning the sampling procedure. Ensure all sampling supplies are present and have been properly labeled. Use predetermined random selection procedure to select a carcass. Birds will be collected after the chiller, at the end of the drip line as follows:

1. Gather all supplies for sampling. An assistant may be helpful during the sampling process when pouring the rinse solution (BPW) into the bag containing the carcass.

2. Put on sterile gloves. Open a stomacher-type 3500 bag without touching the sterile interior of the bag. Rubbing the top edges between the thumb and forefinger will cause the opening to gap for easy opening.

3. With one hand, push up through the bottom of the sampling bag to form a 'glove' over one hand with which to grab the bird, while using your other hand to pull the bag back over the hand that will grab the bird. This should be done aseptically without touching the exposed interior of the bag.

4. Using the hand with the bag reversed over it, pick up the bird by the legs (hocks) through the stomacher bag. (The bag functions as a ''glove'' for grabbing the bird's legs.) Take care not to contaminate the exposed interior of the bag. Allow any excess fluid to drain before reversing the bag back over the bird. (Alternately, have an assistant hold open the bag. Using your gloved hand, pick up the bird by the legs, allow any fluid to drain, and place the bird vent side up into the sampling bag.)

5. Rest the bottom of the bag on a flat surface. While still holding the top of the bag slightly open, add the 400 ml of sterile BPW to the sterile plastic bag. (Alternately, with the aid of an assistant holding the bag open, add the 400 ml of sterile BPW to the bag, pouring the solution into the carcass cavity.)

6. Close the bag and while securely holding the bag, rinse bird inside and out using a rocking motion for 30 shakes (approximately one minute). This is done by holding the bird through the bottom of the bag with one hand and the closed top of the bag with the other hand. Hold the bird securely and rock it in an arcing motion, alternating the weight of the bird from one hand to the other (motion like drawing an invisible rainbow or arch), assuring that all surfaces (interior and exterior of the carcass) are rinsed.

7. Put the bird in the bag on a flat surface. Open the bag.

8. With a gloved hand, remove the carcass from the bag. Since the carcass was rinsed with a sterile solution, it should be returned to the chill tank. Be sure not to touch the interior of the bag with your gloved hand.

9. Twist the top of the bag several times (about 4 or 5 turns). Fold the twisted portion of the bag to form a loop. Secure the twisted loop with the supplied plastic tie-wrap. The tie-wrap should be very tight so that the rinse fluid will not spill out. Place the sample bag into another bag and secure the opening of the outer bag. [Alternately, at least 30 ml of the rinse fluid can be poured into a sterile, leak-proof sampling container and the container then can be placed in a sampling bag for transport to the lab. NOTE: It is important to send at least the minimum volume of rinse fluid, since 30 ml of rinse fluid will be used for sample analysis. The solution remaining after decanting the 30 ml can be poured down the drain]

10. (a) If samples are to be analyzed at an ON-SITE LABORATORY, begin sample preparation for the selected method of analysis.

(b) If samples are to be analyzed at an OUTSIDE (OFF-SITE) LABORATORY, follow the procedure in the Sample Shipment section.

Turkey Carcass Rinse Sampling Procedure

*Materials*

1. 1 large sterile 3500 ml stomacher-type or ziplock-type bags or equivalent, at least 8″ × 24″
2. 600 ml sterile, Buffered Peptone Water (BPW)
3. Plastic cable-tie wraps or thick rubber bands or equivalent
4. Sterile gloves

*Collection*

Read the sections under Pre-sampling Preparation and Preparation for Sample Collection before beginning the sampling procedure. Ensure that all supplies are on hand, labeled, and readily available. An assistant will be needed to hold the bag for collecting the bird. Use the predetermined random selection procedure to select the turkey carcass to be sampled. The randomly selected birds will be collected after the chiller, at the end of the drip line as follows:

1. Have an assistant open the large stomacher-type bag (18″ × 24″). (Rubbing the top edges of the stomacher-type bag between the thumb and index finger will cause the opening to gap.) The assistant should be ready to receive the turkey carcass.
2. Put on sterile gloves.
3. Remove the selected turkey from the drip line by grasping it by the legs and allowing any fluid to drain from the cavity.
4. Place the turkey carcass, vent side up, into a sterile Stomacher-type 3500 bag (or equivalent). Large turkeys should be placed in a plain, clear polypropylene autoclave bag (ca. 24″ × 30–36″). Only the carcass should come in contact with the inside of the bag.
5. While still supporting the carcass with one hand on the bottom of the bag, have the assistant open the bag with the other hand. Alternately, the assistant can rest the bottom of the bag on a sanitized table and while still supporting the carcass, open the bag with the other hand.
6. Add the 600 ml of sterile BPW to the sterile plastic bag, pouring the solution into the carcass cavity of the BPW over the exterior of the carcass. Close the bag.
7. Manipulate the loose neck skin on the carcass through the bag and position it over the neck bone area to act as a cushion and prevent puncturing of the bag. The assistant will need to support the carcass with one hand on the bottom of the bag. Close bag.
8. Squeeze air from the bag and close top. Take the bag from the assistant. Close the bag and while securely holding the bag, rinse bird inside and out using a rocking motion for 30 shakes (approximately one minute). This is done by holding the carcass through the bag with one hand and the closed top of the bag with the other hand. Holding the bird securely with both hands, rock in an arcing motion alternating the weight of the bird from one hand to the other (motion like drawing an invisible rainbow or arch), assuring that all surfaces (interior and exterior of the carcass) are rinsed.
9. Hand the bag back to the assistant.
10. With a gloved hand, remove the carcass from the bag first letting any excess fluid drain back into the bag. Since the carcass was rinsed with a sterile solution, it should returned to the chill tank. Be sure not to touch the interior of the bag with your gloved hand.
11. Expel excess air, taking care not to expel any rinse fluid. Twist the top of the bag several times (about 4 or 5 turns). Fold the twisted portion of the bag to form a loop. Secure the twisted loop with the supplied plastic tie-wrap. The tie-wrap should be very tight so that the rinse fluid will not spill out.
12. Place the sample bag into another bag and secure the opening of the outer bag. [Alternately, no less than 30 ml of the rinse fluid can be poured into a sterile, leak-proof sampling container and placed in a sampling bag for transport to the lab. Thirty ml of rinse fluid will be used for sample analysis. The solution remaining after decanting the 30 ml can be poured down the drain]
13. (a) If samples are to be analyzed at an ON-SITE LABORATORY, begin sample preparation for the selected method of analysis. (See Analytical Methods section.)

(b) If samples are to be analyzed at an OUTSIDE (OFF-SITE) LABORATORY, follow the procedure in the Sample Shipment section.

Sample Shipment

It is recommended that samples be analyzed on-site (not in the plant itself, but in a suitable laboratory). Those samples analyzed on-site must be analyzed as soon after collection as possible. If no on-site facilities are available, the samples must be shipped the same calendar day as collected, to an outside laboratory. The samples must be analyzed the day after collection.

1. Prechill shipping container by placing the open shipping container in the refrigerator at least the day before sampling.
2. Place the appropriately-labeled double-bagged sample in the prechilled shipper in an upright position to prevent spillage. Newspaper may be used for cushioning the sample and holding it in the upright position. Ensure that the sample is maintained at refrigeration temperature to prevent multiplication of any microorganisms present and to provide the most accurate results.
3. Place a corrugated cardboard pad on top of the sample. Next, place the frozen gel pack(s) on top of the corrugated pad to prevent direct contact of frozen gel packs with the sample. Use sufficient frozen coolant to keep the sample refrigerated during shipment to the designated laboratory. Insert a foam plug and press it down to minimize shipper head space.
4. Ship sample (via overnight delivery or courier) to the assigned laboratory.

*Analytical Methods*

Equipment, Reagents, and Media

Equipment

1. Sterile scalpels, scissors, forceps, knives, spatulas, spoons, ruler or template, pipettes, petri dishes, test tubes
2. Sterile Stomacher 3500 bags (or equivalent) or plain, clear polypropylene autoclave bags (ca. 24″ × 30–36″)
3. Incubator, 36 ± 1°C
4. Incubator/Water bath, 42 ± 0.5°C
5. A mechanical homogenization device. A Stomacher, used with sterile plastic bags, is acceptable. Some laboratories prefer to use a sterile Osterizer-type blender with sterilized cutting assemblies and adapters for use with sterile Mason jars.
6. Water bath, 48–50°C
7. Glass slides, glass plate marked off in one-inch squares or agglutination ring slides
8. Balance, 2000 gram capacity, sensitivity of 0.1 gram
9. Inoculating needles and loops
10. Vortex mixer
11. Sterile sampling sponge and sponge bag

Reagents

1. Iodine solution for TT broth (Hajna)
2. Buffered Peptone Water (BPW) diluent
3. Methyl red reagent
4. O'Meara's V–P reagent, modified
5. Kovac's reagent
6. Ferric chloride, 10% aqueous solution
7. Sterile mineral oil
8. Saline, 0.85%
9. Saline, 0.85% with 0.6% formalin
10. *Salmonella* polyvalent O antiserum
11. *Salmonella* polyvalent H antiserum
12. *Salmonella* individual O grouping sera for groups A–I

Media

1. Buffered peptone water (BPW)
2. Tetrathionate broth (TT-Hajna)
3. Rappaport-Vassiliadis (RV) broth (4)—Merck Chemical Co., Cat. #7700 or equivalent
4. Brilliant green sulfa agar (BGS; contains 0.1% sodium sulfapyridine)
5. Double modified lysine iron agar (DMLIA; 2)
6. Triple sugar iron agar (TSI)
7. Lysine iron agar (LIA)
8. MR–VP Medium
9. Tryptone broth
10. Simmons citrate agar
11. Phenol red tartrate agar
12. Motility Medium
13. Christensen's urea agar
14. Carbohydrate fermentation media with Andrade's indicator
15. Decarboxylase test media (Moeller)
16. Malonate broth
17. KCN broth
18. Phenylalanine agar
19. Nutrient gelatin
20. Trypticase soy broth
21. Tryptose broth

Analytical Procedures

Sample Preparation for Analysis

The diverse nature of the samples which may require analysis (e.g., ground product versus a poultry carcass rinse sample) requires separate preparation procedures for each sample type.

*Raw Ground Product Sample Preparation*

a. Use a sterile spoon or spatula to take portions of product from several areas of the sample to prepare a 25 g composite sample in a sterile plastic stomacher-type bag or blender jar. Use of a stomacher filter bag may facilitate pipetting after pre-enrichment.

b. Add 225 ml BPW. Homogenize for two minutes in a Stomacher or blender.

*Beef or Pork Carcass Sponge Sample Preparation*

a. Add 50 ml of BPW to the sample bag containing the sponge to bring the total volume to 50 ml. Mix well.

*Whole Chicken Carcass Rinse-Fluid Sample Preparation*

a. Remove 30 ml of carcass-rinse fluid and place it in a sterile plastic bag or other sterile container.

b. Add 30 ml of BPW to the sample. Mix well.

*Turkey Carcass Rinse-Fluid Sample Preparation*

a. Remove 30 ml of carcass-rinse fluid and place it in a sterile plastic bag or other sterile container.

b. Add 30 ml of BPW to the sample. Mix well.

Detection Procedure

Sample/BPW suspensions prepared as directed in Sample preparation for analysis section (above) are the starting point for this step in the protocol. From this point on, sample suspensions of various types (e.g., whole bird rinse sample vs. raw ground product) can be treated in the same manner.

Note: If using a screening test, follow manufacturer's instruction for enrichment procedures. If an alternate enrichment scheme is to be used, verification of the effectiveness of this alternate enrichment protocol with the screening test should be received from the manufacturer of the screening test or by in-laboratory testing.

1. Incubate sample/BPW suspension at 36 ± 1°C for 20–24 hours.

2. a. Transfer 0.5 ml of the BPW sample pre-enrichment culture into 10 ml TT broth.

b. Transfer 0.1 ml of the BPW sample pre-enrichment culture into 10 ml RV broth.

3. a. Incubate the TT enrichment culture at 42 ± 0.5°C for 22–24 hours.

b. Incubate the RV enrichment culture at 42 ± 0.5°C for 22–24 hours.

4. Streak each enrichment culture onto both DMLIA and BGS agar plates. Do not subdivide plates for streaking multiple samples; streak the entire agar plate with a single sample enrichment.

5. Incubate plates at 36 ± 1°C.

6. Examine plates after 22–24 hours of incubation. Reincubate negative plates and reexamine them the following day.

7. Select and confirm suspect colonies as described in the sections for Isolation procedure through Biochemical testing procedures (below).

Isolation Procedure

1. Pick typical well-isolated colonies.

a. BGS. Select colonies that are pink and opaque with a smooth appearance and an entire edge surrounded by a red color in the medium. On very crowded plates, look for colonies that appear tan against a green background.

b. DMLIA. Select purple colonies with or without black centers. Since salmonellae typically decarboxylate lysine and ferment neither lactose nor sucrose, the color of the medium reverts to purple.

2. Select three suspect colonies from each plate. Pick only from the surface and center of the colony. Avoid touching the agar because these selective media may suppress growth of organisms which are viable but not visible; such ''sleeper'' organisms can be picked up from the agar surface and carried forward onto media used for confirmation tests. If a plate is crowded and there are no well-isolated colonies available, restreak from this plate *directly* onto fresh selective agar plates.

Initial Isolate Screening Procedure

1. Inoculate TSI and LIA slants consecutively with a single pick from a colony by stabbing the butts and streaking the slants in one operation. If screw-cap tubes are used, the caps must be loosened before incubation. Incubate at 36 ± 1°C for 24±2 hours.

2. Examine TSI and LIA slants as sets. Note the colors of butts and slants, blackening of the media and presence of gas as indicated by gas pockets or cracking of the agar. Note also the appearance of the growth on the slants along the line of streak. Discard sets that show ''swarming'' from the original site of inoculation. Discard sets that show a reddish slant in LIA. Isolates giving typical *Salmonella* spp. reactions should be confirmed by serological tests. Examine isolates which are suggestive, but not typical of *Salmonella* spp. by a combination of biochemical and serological procedures. Confirm by biochemical tests ONLY those isolates that appear typical of *salmonellae,* but do not react serologically. Refer to the following chart for assistance in making these determinations.

| Triple sugar iron agar | | | Lysine iron agar | | Polyvalent sera | | Disposition |
|---|---|---|---|---|---|---|---|
| Butt | Slant | $H_2S$ | Butt | $H_2S$ | O | H | |
| Y | R | + | P | + | + | + | Salmonella spp. |
| Y | R | + | P | + | + | - | B. & M. T. |
| Y | R | - | P | - | ..... | ..... | B. & M. T. |
| Y | R | - | Y | - | + | + | B. & M. T.[1] |
| Y | R | - | Y | - | - | ..... | Discard. |
| Y | R | + | Y | ± | ..... | ..... | Discard. |
| Y | Y | - | Y/P | - | ..... | ..... | Discard. |

| Triple sugar iron agar | | | Lysine iron agar | | Polyvalent sera | | Disposition |
|---|---|---|---|---|---|---|---|
| Butt | Slant | $H_2S$ | Butt | $H_2S$ | O | H | |
| Y | Y | + | P | + | ..... | ..... | B. & M. T.[2] |
| NC | NC | ..... | ..... | ..... | ..... | ..... | Discard. |

Y = Yellow; R = Red; P = Purple; B. & M. T. = Biochemical and motility tests; NC = No change in color from uninoculated medium.
[1] *Salmonella choleraesuis* (rarely found in swine in U.S.).
[2] *Salmonella arizonae.*

Serological Tests

All isolates giving TSI and LIA reactions which could be considered suggestive of *Salmonella* should be tested serologically. If the TSI and LIA reactions, together with the serological reactions, are indicative of *Salmonella*, confirmation may cease at this point. If, however, atypical TSI or LIA results and/or negative serological tests are encountered, biochemical testing is mandatory (see Biochemical testing procedure, below).

1. O Agglutination Tests

At a minimum, isolates should be tested with polyvalent O antiserum reactive with serogroups A through I. Following a positive reaction with polyvalent O antiserum, it is necessary to type the isolate using individual *Salmonella* antisera for O groups A through I. Testing for O groups A through I should encompass the majority of the *Salmonella* serotypes commonly recovered from meat and poultry products. Occasionally, however, an isolate which is typical of *Salmonella* (biochemically and Poly H serologically) but non-reactive with antisera to groups A through I will be recovered; such an isolate should be reported as ''*Salmonella* non A–I'' or ''*Salmonella* O group beyond I''.

Follow the manufacturer's instructions enclosed with the antisera. Use growth from either the TSI or LIA slant. Test the isolate first using polyvalent O antiserum. Do not read agglutination tests with a hand lens. If there is agglutination with the saline control alone (autoagglutination), identify such an isolate by biochemical reactions. If the saline control does not agglutinate and the polyvalent serum does, identify the individual O group using the individual Salmonella O grouping antisera for groups A through I. Record positive results and proceed to H agglutination tests.

2. H Agglutination Tests

Inoculate Trypticase soy broth or Tryptose broth. Incubate at 36 ± 1 °C overnight or until growth has an approximate density of three on McFarland's scale. Add an equal amount of saline containing 0.6% formalin and let set one hour. Remove one ml to each of two 13 × 100 mm test tubes. To one of the tubes, add *Salmonella* polyvalent H serum in an amount indicated by the serum titer or according to the manufacturer's instructions. The other tube serves as an autoagglutination control. Incubate both tubes at 48–50 °C in a water bath for up to one hour. Record presence or absence of agglutination. Alternatively, any other poly H agglutination test may be used as long as it gives results equivalent to the conventional tube agglutination procedure described above.

Biochemical Testing Procedures

Biochemical confirmation is only necessary with those isolates giving atypical TSI or LIA results and/or negative serological tests. Do the minimum number of tests needed to establish that an isolate can be discarded or that it is a member of the genus *Salmonella*. Exhaustive testing of any isolate from a sample that has already yielded a typical, easily identifiable *Salmonella* is unnecessary.

If further testing is necessary, inoculate the following media first: Tryptone broth, MR–VP medium, Simmons citrate agar, Christensen's urea agar, motility test medium, phenol red tartrate agar, and glucose, lactose, sucrose, salicin and dulcitol fermentation broths. Incubate at 36 ± 1 °C and record reactions the following day. Test Tryptone broth with Kovac's reagent for indole production in 24 hours and, if negative, again in 48 hours. Do not perform the MR–VP test until 48 hours have elapsed. If results are ambiguous, repeat MR test after five days of incubation. Hold negative carbohydrate fermentation tests for 14 days.

Refer to ''Edwards and Ewing's Identification of Enterobacteriaceae'', 4th Edition (3), for biochemical reactions of Enterobacteriaceae and for fermentation media and test procedures.

Discard all isolates that give positive urea or VP reactions. Discard any isolate that has the following combination of characteristics: produces gas in glucose, produces indole but not $H_2S$, is MR positive, VP negative and citrate negative; such organisms are E. coli regardless of ability to ferment lactose in 48 hours.

Inoculate additional biochemical tests as necessary to eliminate other Enterobacteriaceae. Refer to Edwards and Ewing for details. Eliminate Providencia spp. by a positive phenylalanine reaction. Eliminate Hafnia alvei on the basis of the following biochemical pattern: indole negative; MR negative, and VP and citrate positive based on four days of incubation at 25 °C; fermentation of arabinose and rhamnose; failure to ferment adonitol, inositol, sorbitol, and raffinose.

Alternatively, any other biochemical test system may be used as long as it gives results equivalent to the conventional tests.

Quality Control Procedures

It is recommended that a minimum of three method controls be analyzed whenever meat or poultry products are being examined for the presence of salmonellae. These controls should include a S. typhimurium ($H_2S$ positive), S. senftenberg ($H_2S$ negative), and an uninoculated media control. The inoculum level for the positive controls should approximate 30–300 CFU per container of enrichment medium. Inoculate positive controls at the end of each day's run. Incubate the three controls along with the samples, and analyze them in the same manner as the samples. Confirm at least one isolate recovered from each positive control sample.

Storage of Isolates

Do not store isolates on TSI agar because this tends to cause roughness of O antigens. For short-term (2–3 months) storage, inoculate a nutrient agar slant, incubate at 36 ± 1 °C overnight, and then store at 4–8 °C.

For long-term storage of isolates, subculture Salmonella isolates by stabbing nutrient agar (0.75% agar). Incubate at 36 ± 1 °C overnight, and then seal with hot paraffin-soaked corks. Household wax is better than embedding paraffin because it stays relatively soft at room temperature making the corks easy to remove. Store isolates *in the dark at room*

*temperature*. Such isolates will remain viable for several years.

Store ''working'' Salmonella stock cultures on nutrient agar slants. Transfer stocks monthly, incubate overnight at 36 ± 1 °C, and then store them at 4–8 °C.

References

1. AOAC International. 1995. Official Methods of Analysis of AOAC International. P.A. Cunniff, ed. 16th Edition. Gaithersburg, MD.

2. Bailey, J. S., J. Y. Chiu, N.A. Cox, and R.W. Johnston. 1988. Improved selective procedure for detection of salmonellae from poultry and sausage products. J. Food Protect. 51(5):391–396.

3. Ewing, W. H. 1986. ''Edwards and Ewing's Identification of Enterobacteriaceae'', 4th Edition. Elsevier Science Publishing Co., Inc., New York, NY.

4. Vassiliadis, P. 1983. The Rappaport-Vassiliadis (RV) enrichment medium for the isolation of salmonellas: An overview. J. Appl. Bacteriol. 54:69–76.

BILLING CODE 3410–DM–P

Figure 1. Example of sampling template (not drawn to scale)

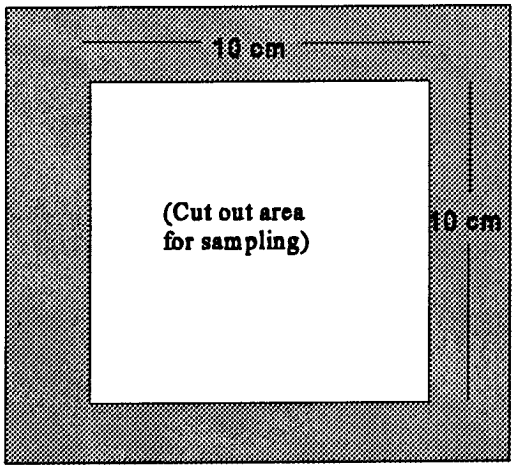

Figure 2. Sampling locations for *Salmonella* testing of cattle carcasses

*Rump* Locate the posterior aspect of the aitch bone. Draw an imaginary line toward the achilles tendon. At the point where the line intersects the cut surface of the round is the starting point for the rump sample. Measure 10 cm up the line leading to the achilles tendon, then 10 cm over (laterally), then 10 cm back to the cut surface of the round, then 10 cm along the cut surface to form the 10 cm by 10 cm square area.

**Note:** This upper illustration has been purposely altered somewhat. A true lateral view of the carcass would not show the aitch bone. From a medial view, the whole 10 cm x 10 cm sampling area could not be seen. Therefore, a lateral view with a portion of the round removed so the location of the aitch bone is shown is illustrated.

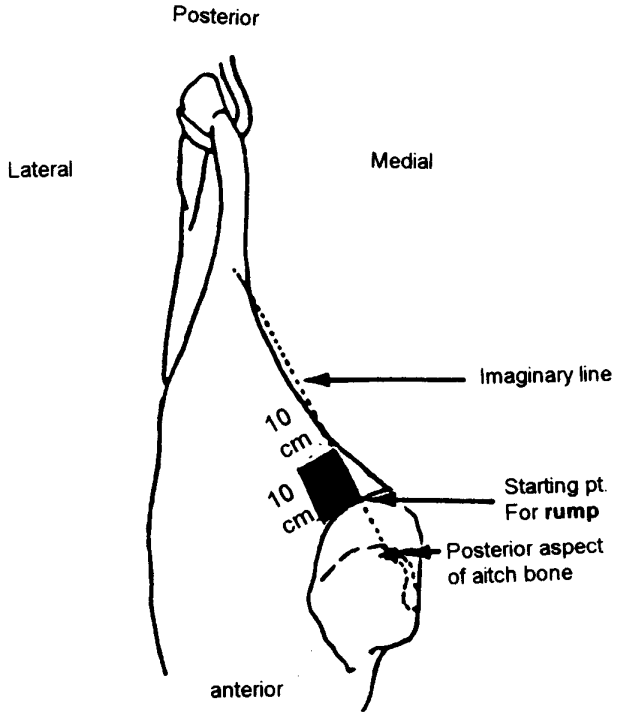


*Flank* Locate the cutaneous flank muscle (external abdominal oblique) and follow the medial border of the muscle anteriorly until it comes with approximately 3" of the midline. This will be the starting point. Measure up (posteriorly) 10 cm (approximately 4 inches) along a line approximately 3" from the midline (measure up or parallel to the midline), then over (laterally) 10 cm (approximately 4 inches) to form a 10 cm wide by 10 cm long square sample.

*Brisket* Locate the elbow of the carcass. Draw an imaginary line straight across (medially) to the midline cut. This will be the starting point. Measure up along the midline 10 cm (approximately 4 inches), then over 10 cm (approximately 4 inches) to form a 10 cm wide by 10 cm long square sample.

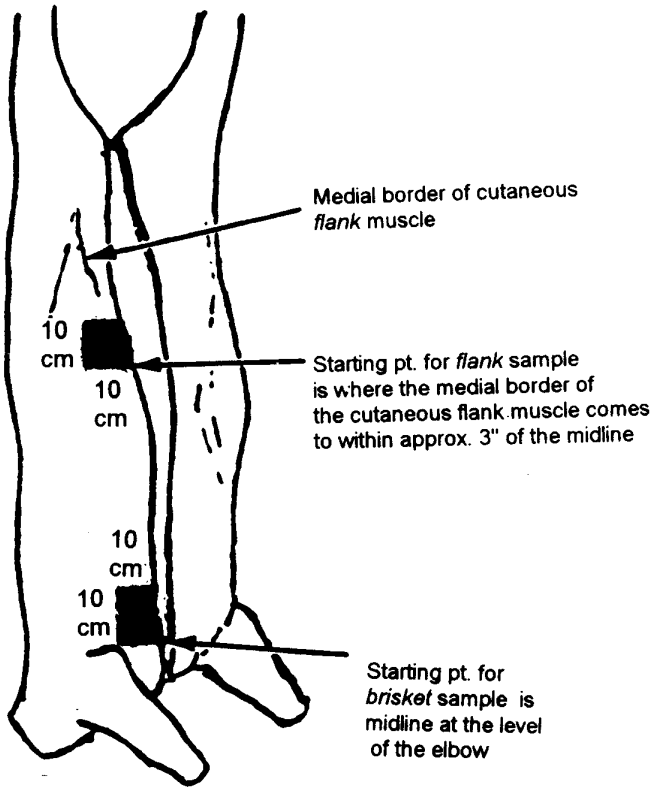

Figure 3. Sampling locations for *Salmonella* testing of swine carcasses

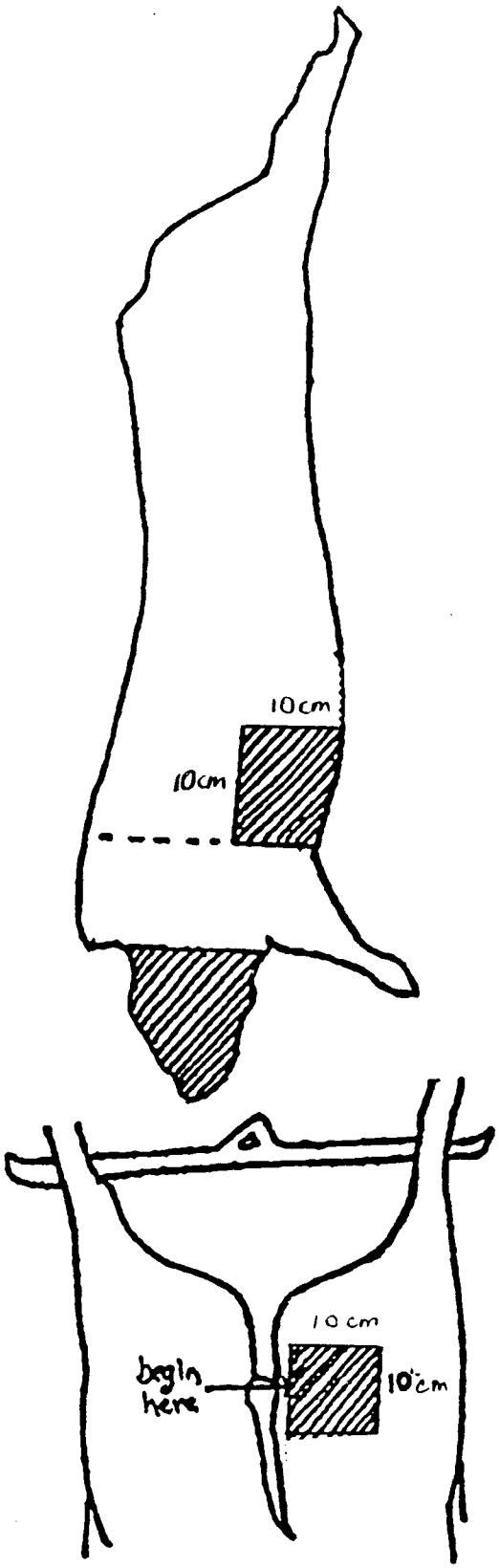


*belly* Locate the elbow of the carcass. Draw an imaginary line straight across (medially) to the midline cut. This will be the starting point. Measure up along the midline 10 cm (approximately 4 inches), then over 10 cm (approximately 4 inches) to complete the 10 cm long by 10 cm wide square sample area to swab for swine "belly" sample.

*jowls* Draw an imaginary line from the atlas/axis joint to the ventral midline; all skin below that point will be considered the jowl.

*ham* From the dorsal position, locate the lateral surface of the base of the tail, and measure up (caudal) 5 cm along the lateral edge of the exposed fat margin, then 10 cm laterally. Now measure 10 cm down (cranial), then 10 cm medially, then 5 cm up (posteriorly) to complete a 10 cm long by 10 cm wide square sampling area.

BILLING CODE 3410–DM–C

## Appendix F—Guidelines for Escherichia coli Testing for Process Control Verification in Cattle and Swine Slaughter Establishments

### *Introduction*

Under the Pathogen Reduction/HACCP Regulation, all slaughter establishments will be required to test carcasses for generic *E. coli* as a tool to verify process control. This document outlines the sampling and microbial testing that should be followed to meet this requirement. It also gives guidance to interpreting your results. This document is a supplement to the Regulation, but not a substitute for it. Further in-depth details of the program may be found in the Regulation. Please provide these guidelines to your company microbiologist or testing laboratory in order to help you meet the regulatory requirements for generic *E. coli* testing.

### *Guidelines for Sample Collectors/Microbiologists*

#### Background

This sampling protocol has been prepared to support the Pathogen Reduction/HACCP Regulation. This protocol incorporates the use of a nondestructive sampling technique for sample collection from raw beef and swine carcasses. These techniques have been evaluated by the Agricultural Research Service and have been designed to give comparable results to the FSIS Nationwide Microbiological Baseline Data Collection Programs' excised tissue samples. We are continuing to improve the sponging techniques and welcome comments. This technique will also be used in the FSIS *Salmonella* testing programs and will be closely monitored during the first year of prevalence phase testing.

Carcasses within the same establishment and in different establishments must be sampled and analyzed in the same manner if the results are to provide a useful measure of process control across the nation. It is imperative that all like establishments adhere to the same sampling and analysis requirements detailed here, without deviation. These sampling and analytical procedures may be directly written into your establishment's individual HACCP plan.

Cattle and swine carcasses must be sampled at the end of the slaughter process in the cooler. These sample collection locations are the same as those in the FSIS baseline studies, making samples taken here comparable to the nationwide baseline performance criteria.

#### Pre-sampling Preparation

Sample collection will be carried out by the individual designated in the establishment's written protocol for microbiological sampling. This protocol should include a check list of tasks to be performed prior to sample collection, materials needed for sample collection, random selection procedures, where the samples will be analyzed (on-site versus off-site), and other information that will aid the sample collector. As stated previously, this guideline can be a part of the plant's sample collection guidelines, but plant specific details and procedures will need to be included. Sampling supplies, such as sterile gloves, sterile sampling solutions, hand soap, sanitizing solution, etc., as well as specific materials needed for sampling different carcass types (i.e., specimen sponges in bags and template for sampling cattle or swine carcasses), will need to be assembled prior to beginning sample collection.

For cattle and swine carcass sampling, a template will be needed to mark off the area to sample. The template can be made of metal or aluminum foil, brown paper, flexible plastic, etc. Some disposable templates may come sterilized and individually prepackaged. To make a reusable template, cut out a 10 centimeters (cm) x 10 cm (3.94 inches x 3.94 inches) square from a sheet larger than the area to be sampled. (See Figure 1). If a reusable template is used, it will need to be sanitized with an approved sanitizing solution [e.g., hypochlorite (bleach) solution or alcohol]. However, the template needs to be dry before placing it on the carcass. Aluminum foil or paper templates can be used once and discarded. The foil for the template should be stored in a manner to prevent contamination. Since the area enclosed by the template will be sampled, take care not to touch this area with anything other than the sampling sponge. Using dirty or contaminated material may lead to erroneous results. If an autoclave is available, paper or aluminum foil templates can be wrapped in autoclavable paper and sterilized.

Sterile sampling solutions, Butterfield's phosphate diluent (BPD), can be stored at room temperature. However, at least on the day prior to sample collection, check solutions for cloudiness. DO NOT use solutions that are cloudy, turbid or contain particulate matter. Place the number of containers of sampling solution (BPD) that will be needed for the next day's sampling in the refrigerator.

To obtain the most accurate results, samples should be analyzed as soon after collection as possible. However, if samples must be transported to an off-site laboratory, the samples need to be maintained at refrigeration temperatures until transport, then shipped refrigerated via an overnight delivery service to the laboratory performing the analysis. Samples analyzed off-site must be picked up by the overnight courier the SAME calendar day the sample is collected. The sample must arrive at the laboratory the day after the sample is collected. Samples shipped to an outside laboratory must be analyzed no later than the day after collection. The following section gives information on shipping containers and transporting samples to off-site facilities.

#### *Shipping Containers and Coolant Packs*

It is important that samples fit easily into the shipping containers so that the sample bags do not break. Correct use of the refrigerant gel-ice packs and proper packing of the shipping container are necessary so that samples arrive at the laboratory at an acceptable temperature. Frozen samples or samples which are too warm are not considered valid and must not be analyzed. Some bacteria may be damaged by temperatures that are too cold, while temperatures that are too warm can allow bacteria to reproduce. Maintaining samples at improper temperatures may cause inaccurate sample results. The sample should be kept refrigerated, NOT FROZEN, in the shipping container prior to pickup by the courier service. The shipping container, itself, should not be used as a refrigerator. However, multiple samples (if needed) for that day may be stored in the open shipping container in the cooler or refrigerator.

#### Sampling frequency

Sampling frequency for *E. coli* testing is determined by production volume. The required minimum testing frequencies for all but very low production volume establishments are shown in Table 1 by slaughter species.

TABLE 1.—E. COLI TESTING FREQUENCIES [a]

| | |
|---|---|
| Cattle | 1 test per 300 carcasses. |
| Swine | 1 test per 1,000 carcasses. |

[a] Note: These testing frequencies do not apply to very low volume establishments. See Table 2.

#### *Very Low Volume Establishments*

Some establishments may be classified as very low volume establishments. The maximum yearly

slaughter volumes for very low volume establishments are described in Table 2.

TABLE 2.—MAXIMUM YEARLY LIVESTOCK SLAUGHTER VOLUMES FOR VERY LOW VOLUME ESTABLISHMENTS

| Slaughter species | Criteria (yearly slaughter volume) |
|---|---|
| Cattle | Not more than 6,000 head. |
| Swine | Not more than 20,000 head. |
| Cattle and Swine. | Not more than 20,000 total, with not more than 6,000 cattle. |

Establishments with very low volumes are to sample the predominant species at an initial rate of once per week until at least 13 test results have been obtained. Once the initial criteria have been met for very low volume establishments (see APPLYING PERFORMANCE CRITERIA TO TEST RESULTS), the establishment will repeat the same sampling regime once per year, in the 3 month period of June through August, or whenever a change is made in the slaughter process or personnel.

Random Selection of Carcasses

Samples are to be taken randomly at the required frequency (See section on Sampling Frequency). For example, given the frequency of testing for cattle is 1 (one) test per every 300 cattle slaughtered, then if a plant slaughters 150 head of cattle an hour, 1 (one) sample will be taken every 2 hours.

Different methods of selecting the specific carcass for sampling could be used, but all require the use of random numbers. Methods could include: using random number tables, using calculator- or computer-generated random numbers, drawing cards, etc. When selecting the random numbers, use the method(s) currently in use at the establishment for other sampling programs, if other programs are currently underway.

The carcass for sampling must be selected at random from all eligible carcasses. If multiple lines exist, randomly select the line for sample collection for that interval. Repeat the random selection process for the next sampling interval. Each line should have an equal chance of being selected at each sampling interval.

*Cattle Carcass Selection*

The half-carcasses eligible for sampling should be selected from those in the cooler 12 or more hours after slaughter. Both the ''leading'' and ''trailing'' sides of a carcass should have an equal chance of being selected within the designated time frame (based on the sampling frequency for the plant). NOTE: If more than one shift is operating at the plant, the sample can be taken on any shift, provided the following requirements are met:

*Selection of TIME:* Select the time, based on the appropriate sampling frequency, for collecting the sample.

*Selection of COOLER SITE:* Select a safe and accessible site in the cooler for random selection of the half-carcass. This site may be located at the transfer chain, grading chain, or a rail that contains carcasses that have been chilled 12 hours or more. If there are multiple sites of the same kind, select one at random.

*Selection of HALF-CARCASS:* Based on the sampling frequency for the plant, identify a half-carcass (selected by your random number method) from the predetermined point along the chain (cooler site) and then count back five (5) half-carcasses and select the next half-carcass (carcass) for sampling. The reason for counting back five half-carcasses is to avoid any possible bias during selection. (See Sampling Frequency section to determine the rate of sampling.)

*Swine Carcass Selection*

The carcasses eligible for sampling should be selected from those in the cooler 12 or more hours after slaughter. Every carcass should have an equal chance of being selected within the designated time frame (based on the sampling frequency for the plant). NOTE: If more than one shift is operating at the plant, the sample can be taken on any shift, provided the following requirements are met:

*Selection of TIME:* Select the time, based on the appropriate sampling frequency, for collecting the sample.

*Selection of COOLER SITE:* Select a safe and accessible site in the cooler for random selection of the carcass. This site may be located at the transfer chain, grading chain, or a rail that contains carcasses that have been chilled 12 hours or more. If there are multiple sites of the same kind, select one at random.

*Selection of CARCASS:* Based on the sampling frequency for the plant, identify a whole carcass from the predetermined point along the chain and then count back five (5) carcasses and select the next carcass for sampling. The reason for counting back five carcasses is to avoid any possible bias during selection. (See Sampling Frequency section to determine the rate of sampling.)

Aseptic Techniques/Sampling

Extraneous organisms from the environment, hands, clothing, sample containers, sampling devices, etc., may lead to erroneous analytical results. More stringent requirements for microbiological analysis are necessary, therefore, use of aseptic sampling techniques and clean, sanitized equipment and supplies are of utmost importance.

There should be an area designated for preparing sampling supplies, etc. A stainless steel, wheeled cart or table would be useful during sampling. A small tote or caddy could be moved to the location of sampling and could be used for carrying supplies, supporting sample bags when adding sterile solutions to sample bags, etc.

Sterile gloves should be used for collecting samples. The only items which may contact the external surface of the glove are the exposed sample being collected and/or the sterile sample utensil (specimen sponge). Keep in mind that the outside surfaces of the sample container are not sterile. Do not handle the inside surface of the sterile sample containers. Do not touch anything else. The following procedure for putting on sterile gloves can be followed when collecting samples:

(a) Peel open the package of sterile gloves from the top without contaminating (touching, breathing on, contacting, etc.) the exterior of the gloves.

(b) Remove a glove by holding it from the wrist-side opening inner surface. Avoid any contact with the outer surface of the glove. Insert the washed and sanitized hand into the glove, taking care not to puncture the glove.

(c) Taking care not to contaminate the exterior surface of the glove, repeat the above step for the hand you will use to physically handle the sample.

(d) If at any time you are concerned that a glove may be

Preparation for Sample Collection

Prior to collecting samples, review appropriate sampling steps, random selection procedures, and other information that will aid in sample collection.

On the day prior to sample collection, after checking for cloudiness/turbidity, place the number of BPD containers that will be needed for the next day's sampling in the refrigerator/cooler. If samples are to be shipped to an off-site facility, pre-chill shipping container and refrigerator packs.

On the day of sampling, gather all sample collection bags, sterile gloves, sanitizer, hand soap, sterile solutions for

sampling, and specific materials listed under the Materials section of the sample collection section for the type of carcass to be sampled. Ensure that all sampling supplies are on hand and readily available before beginning sample collection.

Label the sample bags before starting the sampling procedure. Use permanent ink. If you are using paper labels, it is important that the label be applied to the bag at normal room temperature; it will not stick if applied in the cooler.

Outer clothing (frocks, gloves, head gear, etc.) worn in other areas of the plant should be removed before entering the sampling area or preparing to collect samples. Replace outer clothing removed earlier with clean garments (i.e., laboratory coat) that have not been directly exposed to areas of the plant outside of the sampling area.

Sanitize the sample work area surfaces by wiping with a clean disposable cloth or paper towel dipped in a freshly prepared 500 ppm (parts per million) sodium hypochlorite solution (0.05% sodium hypochlorite) or other approved sanitizer which provides an equivalent available chlorine concentration. The sample work area surfaces must be free of standing liquid before sample supplies and/or product containers are placed on them.

Before sampling, thoroughly wash and scrub hands to the mid-forearm. Use antibacterial hand soap. If available, this should include a sanitizer at 50 ppm equivalence available chlorine. Dry the hands using disposable paper towels.

Specific Sample Collection Procedures

Cattle Sample Collection Procedure

*Materials*

1. Sterile specimen sponge in sterile Whirl-pack®-type bag or equivalent
2. 25 ml sterile Butterfield's phosphate diluent (BPD)
3. Sterile ziplock-type or stomacher bag
4. Template for 100 $cm^2$ sampling area
5. Sterile gloves
6. Wheeled ladder, sampling platform, or step ladder
7. Sanitizing solution
8. Small tote or caddy for carrying supplies

*Collection*

Read the sections under Pre-sampling Preparation and Preparation for Sample Collection before beginning the sampling procedure. Use predetermined random selection procedures for selecting the half-carcass to be sampled. Remember, samples will be collected from half-carcasses in the cooler 12 hours or more after slaughter.

A sampling sponge (which usually comes dehydrated and prepackaged in a sterile bag) will be used to sample all three sites on the carcass (flank, brisket, and rump—see Figure 2). It is important to swab the areas in the order of least to most contamination in order to avoid spreading any contamination.

Therefore, swab the areas in the sequence indicated in this sampling protocol. Nondestructive surface sampling will be conducted as follows:

1. Ensure that all bags have been pre-labeled and all supplies are on hand, including the sampling template. (An assistant may be helpful during the sampling process.)
2. IF a reusable template is used, immerse the sampling template in an approved sanitizing solution for at least 1–2 minutes. Just prior to swabbing the first sample site on the carcass (step 13), retrieve the sampling template from the sanitizing solution. Shake excess solution from the utensil, then protect the portion of the template that will contact the carcass from contamination.
3. Locate the flank, brisket, and rump sampling sites using illustrations and directions in Figure 2 (cattle carcass sampling locations).
4. Position the wheeled ladder, sampling platform, or step ladder near the carcass so the rump sample area (Figure 2) is within easy reach from the ladder.
5. While holding the sponge bag at the top corner by the wire closure, tear off the clear, perforated strip at the top of the bag.
6. Remove the cap from sterile BPD bottle, being careful not to touch the bottle opening.
7. Carefully pour about half the contents of the sterile BPD bottle (approximately 10 ml) into the sponge bag to moisten the sponge.
8. Close the top of the bag by pressing the wire closures together. Use hand pressure from the outside of the bag and carefully massage the sponge until it is FULLY HYDRATED (moistened).
9. With the bag still closed, carefully push the moistened sponge to the upper portion of the bag orienting one narrow end of the sponge up toward the opening of the bag. Do NOT open the bag or touch the sponge with your fingers. While holding the bag, gently squeeze any excess fluid from the sponge using hand pressure from the outside. The whole sponge should still be in the bag.
10. Open the bag containing the sponge, being careful not to touch the inner surface of the bag with your fingers. The wire closure at the top of the bag should keep the bag open. Set bag aside.
11. Put on a pair of sterile gloves.
12. Carefully remove the moistened sponge from the bag with the thumb and fingers (index and middle) of your sampling hand.
13. With the other hand, retrieve the template by the outer edge, taking care not to contaminate the inner edges of the sampling area of the template.
14. Locate the flank sampling area (Figure 2). Place the template over this location.
15. Hold the template in place with one gloved hand (Remember, only the sponge should touch the sampling area. Take care not to contaminate this area with your hands)
16. With the other hand, wipe the sponge over the enclosed sampling area (10 cm x 10 cm) for a total of approximately 10 times in the vertical and 10 times in the horizontal directions. The pressure for swabbing would be as if you were removing dried blood from the carcass. However, the pressure should not be too hard as to crumble or destroy the sponge. (Note: The template may need to be ''rolled'' from side to side during swabbing since the surface of the carcass is not flat. This ensures that the 100 $cm^2$ area is enclosed while swabbing.)
17. Repeat steps 14–16 for the brisket area, using the SAME side or surface of the sponge used to swab the flank area.
18. After swabbing the brisket area, transfer the template to the same hand holding the sponge. Do not contaminate the sponge or inner edges of the sampling area of the template.
19. Climb the ladder or platform, holding onto the handrail with the hand used to hold the template. Once at a convenient and safe height for sampling the rump, transfer template back to ''climbing'' hand (hand used to hold onto the rail while climbing the ladder), taking care not to contaminate the inner edges of the template.
20. Repeat steps 14–16 for the rump area, using the ''clean'' surface or side (the side that was NOT previously used to swab the flank/brisket areas) of the sponge.
21. After swabbing the rump area, carefully place the sponge back in the sponge sample bag, taking care not to touch the sponge to the outside of the sample bag.
22. While holding the handrail, climb down from the ladder.
23. Add the additional BPD (about 15 ml) to the sample bag to bring the total volume to approximately 25 ml.
24. Expel excess air from the bag containing the sponge and fold down the top edge of the bag 3 or 4 times to close. Secure the bag by folding the attached wire tie back against the bag.

Place closed sponge bag into second bag and close the second bag securely.

25. (a) If samples are to be analyzed at an ON-SITE LABORATORY, begin sample preparation (ANALYTICAL METHODS section)

(b) If samples are to be analyzed at an OUTSIDE (OFF-SITE) LABORATORY, follow procedure in the Sample Shipment section.

Swine surface sample collection procedure:

*Materials*

1. Sterile specimen sponge in sterile Whirl-Pak®-type bag or equivalent
2. 25 ml sterile Butterfield's phosphate diluent (BPD)
3. Sterile ziplock-type or stomacher-type bag
4. Template for a 100 $cm^2$ sampling area
5. Sterile gloves
6. Wheeled ladder, sampling platform, or step ladder
7. Sanitizing solution
8. Small tote or caddy for carrying supplies

*Collection*

Read the sections under Pre-sampling Preparation and Preparation for Sample Collection before beginning the sampling procedure. Use predetermined random selection procedures for selecting carcass to be sampled. Remember: samples will be collected from carcasses in the cooler 12 hours or more after slaughter. A sampling sponge (which usually comes dehydrated and prepackaged in a sterile bag) will be used to sample all three sites on the swine carcass (belly, ham, and jowl—see Figure 3). It is important to swab the areas in the order of least to most contamination in order to avoid spreading any contamination. Therefore, swab the areas in the sequence indicated in this sampling protocol. Nondestructive surface sampling will be conducted as follows:

1. Ensure that all supplies are on hand. (An assistant may be helpful during the sampling process.)

2. If a reusable template is used, immerse the sampling template in a sanitizing solution for at least 1–2 minutes. Just prior to swabbing the first sample site on the swine carcass (step 12), retrieve the sampling template from the sanitizing solution. Shake excess solution from the utensil, then protect the portion of the template that will contact the carcass from contamination.

3. Locate the belly, ham, and jowl sampling sites using illustrations and directions in Figure 3 (swine carcass sampling locations).

4. Position the wheeled ladder, sampling platform, or step ladder near the carcass so the ham sample area (Figure 3) is within easy reach from the ladder.

5. Hold the sponge bag at the top corner by the wire closure, then tear off the clear perforated strip at the top of the bag. Open the bag.

6. Remove the cap from sterile BPD bottle, being careful not to touch the bottle opening. Do not contaminate the lid.

7. Carefully pour about half of the contents of the sterile BPD bottle (10 ml) into the sponge bag to moisten the sponge. Put the lid back on the BPD bottle.

8. Close the top of the bag by pressing the wire closures together. Use hand pressure from the outside of the bag and carefully massage the sponge until it is FULLY HYDRATED (moistened).

9. With the bag still closed, carefully push the moistened sponge to the upper portion of the bag orienting one narrow end of the sponge up toward the opening of the bag. Do NOT open the bag or touch the sponge with your fingers. While holding the bag, gently squeeze any excess fluid from the sponge using hand pressure from outside. The whole sponge should still be inside the bag.

10. Open the bag containing the sponge, being careful not to touch the inner surface of the bag with your fingers. The wire closure at the top of the bag should keep the bag open.

11. Put on a pair of sterile gloves.

12. Carefully remove the moistened sponge from the bag with the thumb and fingers (index and middle) of your sampling hand.

13. With the other hand, retrieve the template by the outer edge, taking care not to contaminate the inner edges of the sampling area of the template.

14. Locate the belly sampling area (Figure 2). Place the template over this location.

15. Hold the template in place with one gloved hand. Remember, only the sponge should touch the sampling area. Take care not to contaminate this area with your hands.

16. With the other hand, wipe the sponge over the enclosed sampling area (10 cm × 10 cm) for a total of approximately 10 times in the vertical and 10 times in the horizontal directions. The pressure for swabbing would be as if you were removing dried blood from the carcass. However, the pressure should not be too hard as to crumble or destroy the sponge.

Note: The template may need to be ''rolled'' from side to side during swabbing since the surface of the carcass is not flat. This ensures that the 100 $cm^2$ area is enclosed while swabbing.

17. After swabbing the belly area, transfer the template to the same hand that is holding the sponge. Do not contaminate the sponge or the inner edges of the sampling area of the template.

18. Climb the ladder or platform, holding onto the handrail with the hand used to hold the sampling template in place. Once at a convenient and safe height for sampling the ham, transfer template back to the ''climbing'' hand (hand used to hold onto the rail while climbing the ladder), taking care not to contaminate the sponge or the inner edges of the template.

19. Repeat steps 14–16 for the ham sampling area, using the SAME surface of the sponge used to swab the belly area.

20. After swabbing the ham area, carefully place the template back to the same hand that is holding the sponge. Do not contaminate the sponge or the inner edges of the sampling area of the template.

21. While holding the handrail, climb down from the ladder.

22. Transfer the template back to the ''climbing'' hand (hand used to hold onto the rail while descending the ladder), taking care not to contaminate the sponge or the inner edges of the template.

23. Repeat steps 14–16 for the jowl area, using the ''clean'' surface or side (the side that was not previously used to swab the belly/ham areas).

24. After swabbing the jowl area, carefully place the sponge back into the sponge bag. Do not touch the surface of the sponge to the outside of the sponge bag.

25. Add the additional BPD (about 15 ml) to the bag to bring the total volume to approximately 25 ml.

26. Press wire closures of the sponge bag together, expel excess air, then fold down the top edge of the bag 3 or 4 times. Secure the bag by folding the attached wire tie back against the bag. Place the closed sponge bag into the second bag and close the second bag securely.

27. (a) If samples are to be analyzed at an ON-SITE LABORATORY, begin sample preparation (ANALYTICAL METHODS section).

(b) If samples are to be analyzed at an OUTSIDE (OFF-SITE) LABORATORY, follow procedure in the Sample Shipment section.

Sample Shipment

Samples analyzed on-site must be analyzed as soon after collection as possible. If no on-site facilities are available, the samples must be shipped the same calendar day as collected, to

an outside laboratory. The samples must be analyzed no later than the day after collection.

1. Prechill shipping container by placing the open shipping container in the refrigerator at least the day before sampling.

2. Place the appropriately-labeled, double-bagged sample(s) in the prechilled shipping container in an upright position to prevent spillage. Newspaper may be used for cushioning the sample and holding it in the upright position. If more than one sample is collected during the day, take steps to ensure that samples are maintained at refrigeration temperature. Refrigeration temperatures help limit multiplication of any microorganisms present which ensures the most accurate results.

3. Place a corrugated cardboard pad on top of samples. This corrugated cardboard pad prevents direct contact of frozen gel packs with the samples. Next place the frozen gel pack(s) on top of the corrugated pad. Use sufficient frozen coolant to keep the sample refrigerated during shipment to the designated laboratory. Insert foam plug and press it down to minimize shipper head space.

4. Ship samples (via overnight delivery or courier) to the assigned laboratory.

Analytical Methods

Samples must be analyzed using one of the *E. coli* (Biotype I) quantitation methods found in the Official Methods of Analysis of the Association of Official Analytical Chemists (AOAC), International, 16th edition, or by any method which is validated by a scientific body in collaborative trials against the three tube Most Probable Number (MPN) method and agreeing with the 95% upper and lower confidence limits of the appropriate MPN index.

Suggested Quantitation Schemes

If a generic one ml plating technique is used for *E. coli* quantitation for cattle or swine carcass sponging sample analysis, the plate count would be divided by 12 to equal the count per $cm^2$. To cover the marginal and unacceptable range for *E. coli* levels (described in later section), the undiluted sample extract, a 1:10, a 1:100, a 1:1,000 and a 1:10,000 dilution should be plated, preferably in duplicate. Higher or lower dilutions may need to be plated based on the specific product.

If a hydrophobic grid membrane filtration method were used, the only difference would be filtration of one ml of the undiluted sample extract, 1:10, 1:100, 1:1,000 and 1:10,000 dilutions.

Additional dilutions of the original extract may need to be used if a three tube MPN protocol is used. The three highest dilutions that were positive for *E. coli* are used to calculate the MPN. MPN values from the appropriate MPN Table represent the count per ml of original extract and therefore must be divided by 12 to obtain the count per $cm^2$ of carcass surface area.

Record Keeping

Each test result must by recorded in terms of colony forming units per square centimeter (cfu/$cm^2$). A process control table or chart can be used to record the results and facilitate evaluation. Results should be recorded in the order of sample collection and include information useful for determining appropriate corrective actions when problems occur. The information needed for each sample includes date and time of sample collection, and, if more than one slaughter line exists, the slaughter line from which the sample was collected. These records are to be maintained at the establishment for twelve months and must be made available to Inspection Program employees on request. Inspection personnel review results over time, to verify effective and consistent process control.

For *E. coli* testing to be the most useful for verifying process control, timeliness is important and the record should be updated with the receipt of each new result. Detailed records should also be kept of any corrective actions taken if process control deviations are detected through microbiological testing.

*Applying Performance Criteria to Test Results*

Categorizing Test Results

*E. coli* test levels have been separated into 3 categories for the purpose of process control verification: acceptable, marginal, and unacceptable. (In the Pathogen Reduction/HACCP Regulation, the upper limits for the acceptable and marginal ranges were denoted by m and M.) These categories are described by slaughter species in Table 3.

TABLE 3.—VALUES FOR MARGINAL AND UNACCEPTABLE RESULTS FOR E. COLI PERFORMANCE CRITERIA

| Slaughter class | Acceptable range | Marginal range | Unacceptable range |
|---|---|---|---|
| Cattle | Negative* | Positive but not above 100 cfu/$cm^2$ | Above 100 cfu/$cm^2$. |
| Swine | 10 cfu/$cm^2$ | Above 10 cfu/$cm^2$ but not above 10,000 cfu/$cm^2$. | Above 10,000 cfu/$cm^2$. |

* It should be noted that negative here is defined by the sensitivity of the sampling and test method used in the Baseline survey (5 cfu/$cm^2$ carcass surface area).

To illustrate the use of Table 3, consider a steer/heifer slaughter establishment. E. *coli* test results for this establishment will be acceptable if negative, marginal if positive but not above 100 cfu/$cm^2$, and unacceptable if above 100 cfu/$cm^2$.

Verification Criteria

The verification criteria are applied to test results in the order that samples are collected. The criteria consist of limits on occurrences of marginal and unacceptable results.

As each new test result is obtained, the verification criteria are applied anew to evaluate the status of process control with respect to fecal contamination.

1. An unacceptable result should trigger immediate action to review process controls, discover the cause if possible, and prevent recurrence.

2. A total of more than three marginal or unacceptable results in the last 13 consecutive results also signals a need to review process controls.

This way of looking at the number of marginal and unacceptable results is described as a ''moving window'' approach in the regulation. With this approach, results are accumulated until 13 have been accrued. After this, only the most recent 13 results—those in the ''moving window''—are considered.

An example of a record of results for Steer/Heifer testing is shown (in table form) below for an establishment performing two tests per day.

| Test # | Date | Time collected | Test result (cfu/cm$^2$) | Result unacceptable? | Result marginal? | Number marginal or unacceptable in last 13 | Pass/fail? |
|---|---|---|---|---|---|---|---|
| 1 | 10–07 | 08:50 | 10 | No | Yes | 1 | Pass |
| 2 | ..... | 14:00 | Negative | No | No | 1 | Pass |
| 3 | 10–08 | 07:10 | 50 | No | Yes | 2 | Pass |
| 4 | ..... | 13:00 | Negative | No | No | 2 | Pass |
| 5 | 10–09 | 10:00 | Negative | No | No | 2 | Pass |
| 6 | ..... | 12:20 | Negative | No | No | 2 | Pass |
| 7 | 10–10 | 09:20 | 80 | No | Yes | 3 | Pass |
| 8 | ..... | 13:30 | Negative | No | No | 3 | Pass |
| 9 | 10–11 | 10:50 | Negative | No | No | 3 | Pass |
| 10 | ..... | 14:50 | Negative | No | No | 3 | Pass |
| 11 | 10–14 | 08:40 | 50 | No | Yes | 4 | Fail |
| 12 | ..... | 12:00 | Nonegative | No | No | 4 | Fail |
| 13 | 10–15 | 09:30 | Negative | No | No | 4 | Fail |
| 14 | ..... | 15:20 | Negative | No | No | 3 | Pass |
| 15 | 10–16 | 07:30 | Negative | No | No | 3 | Pass |
| 16 | ..... | 11:40 | Negative | No | No | 2 | Pass |
| 17 | 10–17 | 10:20 | 120 | Yes | No | 3 | Fail |

The following observations can be made on this example:

1. As of 10–14 at 08:40, there are four marginal or unacceptable results in the last 11 results, which exceeds the limit of 3 in 13 consecutive tests.

2. The limit of 3 in 13 also is exceeded for the next two tests, but since no new marginal or unacceptable result has occurred, these failures should not be treated as evidence of a new problem. The log or documentation of corrective action taken for the first failure should be adequate to verify that the deviation or problem was addressed.

3. On 10–15 at 15:20 the number of marginal or unacceptable results in the last 13 tests goes down to 3 because the marginal result for 10–07 at 08:50 is dropped and replaced by an acceptable result as the 13-test window moves ahead 1 test.

4. The result for 10–17 at 10:20 exceeds 100 and is unacceptable.

Figure 4 shows the same results as the above example but the results are displayed in chart form. The numbers along the horizontal axis of the graph (x-axis), refers to the test number in the chart above. The information for each test result, such as the time and date the sample was collected could also be recorded on the chart.

BILLING CODE 3410–DM–P

Figure 1. Example of sampling template (not drawn to scale)

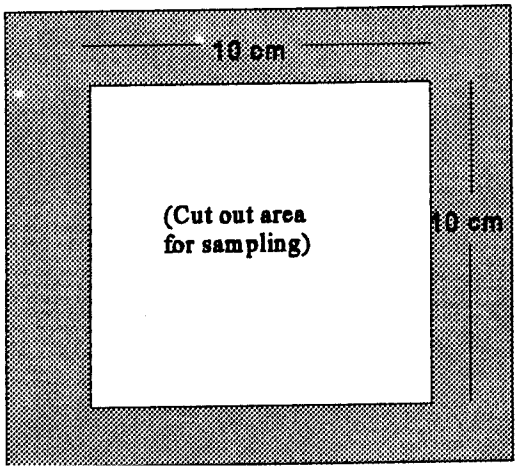

Figure 2. Sampling locations for *E. coli* testing of cattle carcasses

*Rump* Locate the posterior aspect of the aitch bone. Draw an imaginary line toward the achilles tendon. At the point where the line intersects the cut surface of the round is the starting point for the rump sample. Measure 10 cm up the line leading to the achilles tendon, then 10 cm over (laterally), then 10 cm back to the cut surface of the round, then 10 cm along the cut surface to form the 10 cm by 10 cm square area.

**Note:** The upper illustration has been purposely altered somewhat. A true lateral view of the carcass would not show the aitch bone. From a medial view, the whole 10 cm x 10 cm sampling area could not be seen. Therefore, a lateral view with a portion of the round removed so the location of the aitch bone is shown is illustrated.

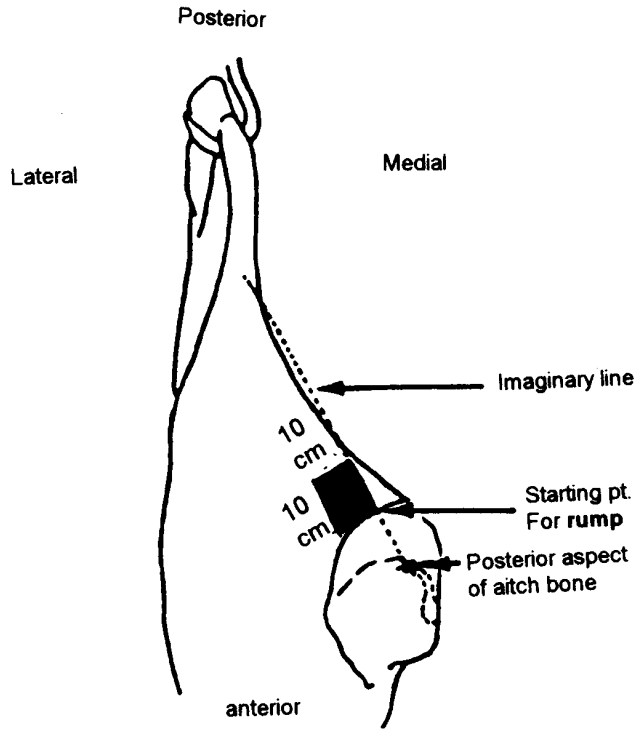


*Flank* Locate the cutaneous flank muscle (external abdominal oblique) and follow the medial border of the muscle anteriorly until it comes with approximately 3" of the midline. This will be the starting point. Measure up (posteriorly) 10 cm (approximately 4 inches) along a line approximately 3" from the midline (measure up or parallel to the midline), then over (laterally) 10 cm (approximately 4 inches) to form a 10 cm wide by 10 cm long square sample.

*Brisket* Locate the elbow of the carcass. Draw an imaginary line straight across (medially) to the midline cut. This will be the starting point. Measure up along the midline 10 cm (approximately 4 inches), then over 10 cm (approximately 4 inches) to form a 10 cm wide by 10 cm long square sample.

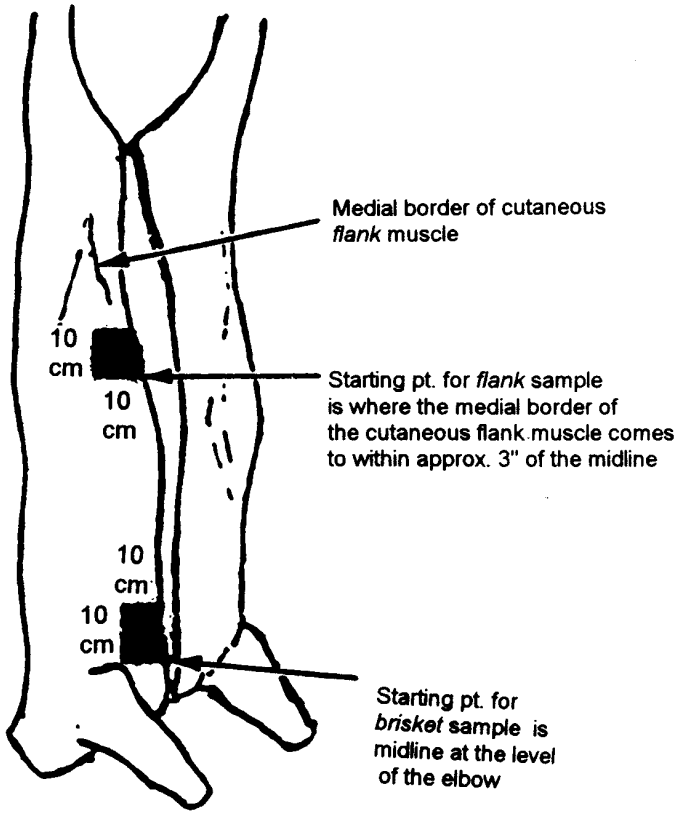

Figure 3. Sampling locations for *E. coli* testing of swine carcasses

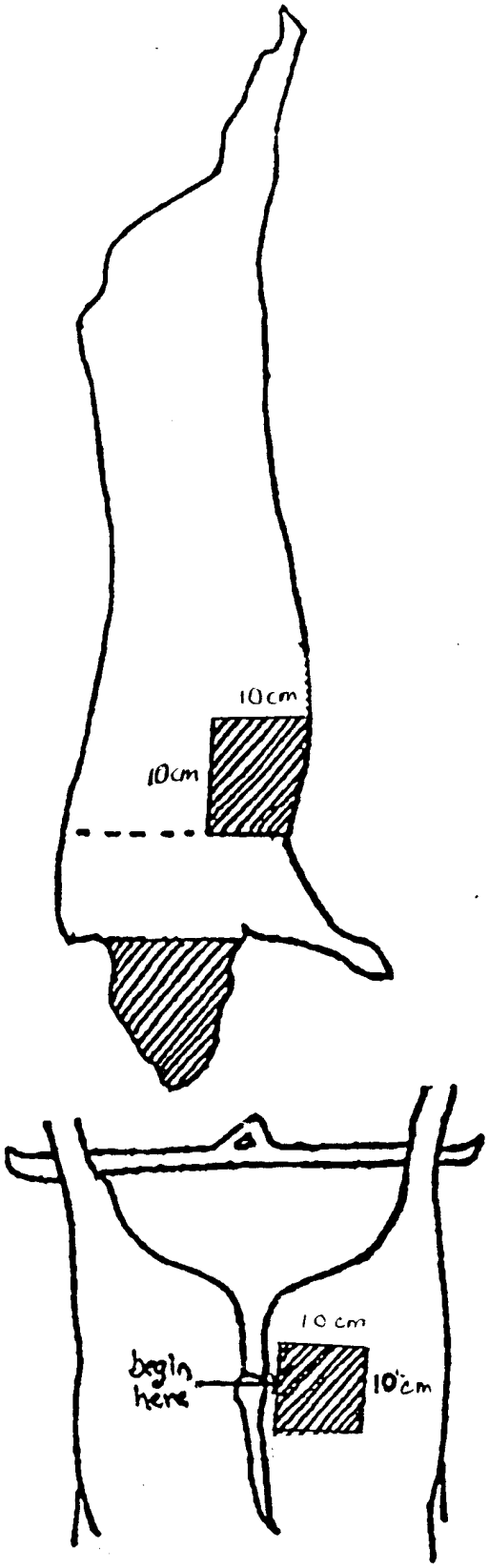


*belly* Locate the elbow of the carcass. Draw an imaginary line straight across (medially) to the midline cut. This will be the starting point. Measure up along the midline 10 cm (approximately 4 inches), then over 10 cm (approximately 4 inches) to complete the 10 cm long by 10 cm wide square sample. This square area will be the 100 $cm^2$ area to swab for the belly sample.

*jowls* Draw an imaginary line from the atlas/axis joint to the ventral midline; all skin below that point will be considered the jowl.

ham From the dorsal position, locate the lateral surface of the base of the tail, and measure up (caudal) 5 cm along the lateral edge of the exposed fat margin, then 10 cm laterally. Now measure 10 cm down (cranial), then 10 cm medially, then 5 cm up (posteriorly) to complete a 10 cm long by 6 cm wide rectangular sampling area.

Figure 4. Example of *E. coli* results using a control chart

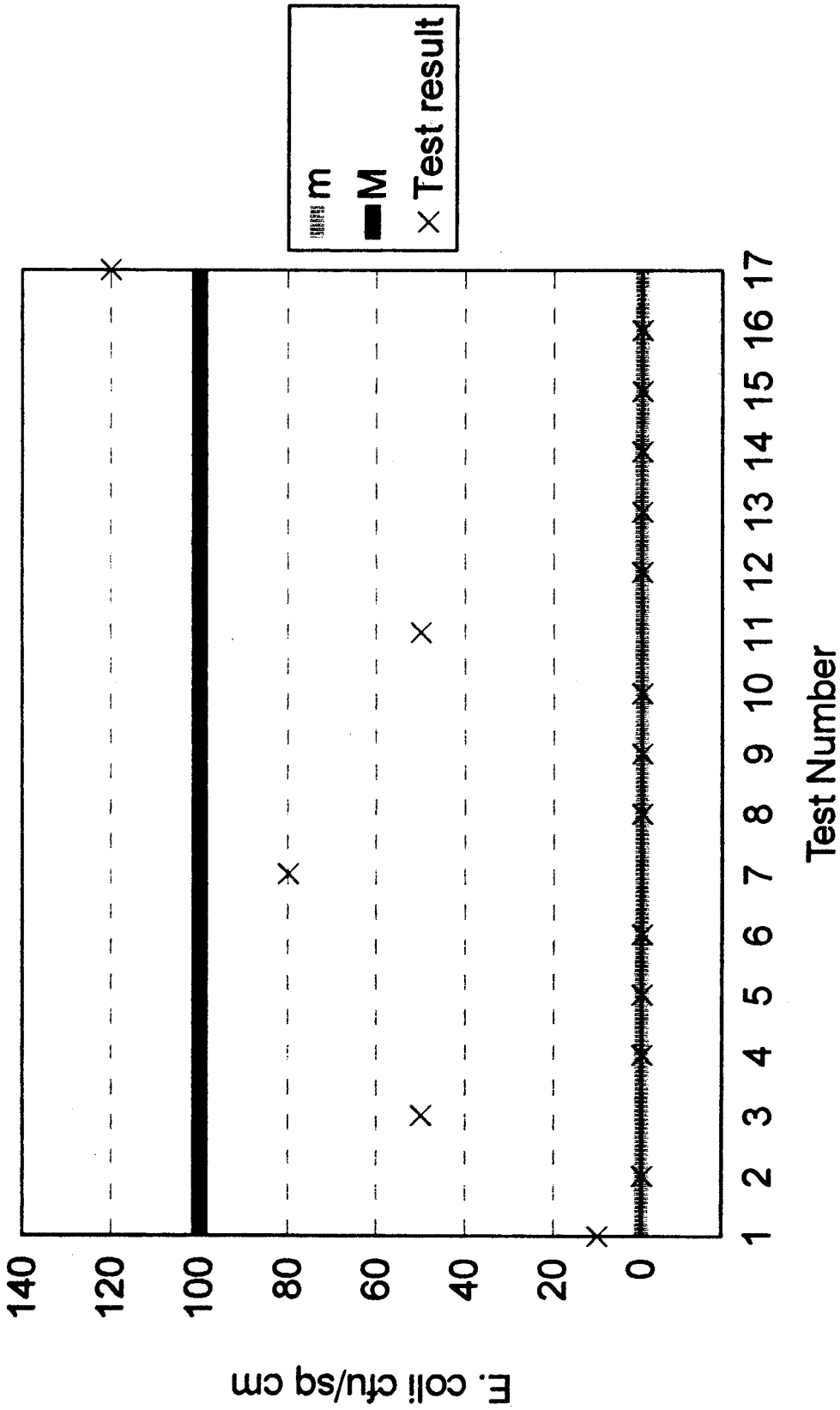


BILLING CODE 3410–DM–C

## Appendix G—Guidelines for Escherichia coli Testing for Process Control Verification in Poultry Slaughter Establishments

### *Introduction*

Under the Pathogen Reduction/HACCP Regulation, all poultry slaughter establishments will be required to test carcasses for generic *E. coli* as a tool to verify process control. This document outlines the sampling and microbial testing that should be followed to meet this requirement. It also gives guidance to interpreting your results. This document is a supplement to the Regulation, but not a substitute for it. Further in-depth details of the program may be found in the Regulation. Please provide these guidelines to your company microbiologist or testing laboratory in order to help you meet the regulatory requirements for generic *E. coli* testing.

### *Guidelines for Sample Collectors/Microbiologists*

#### Background

This sampling protocol has been prepared to support the Pathogen Reduction/HACCP Regulation. Carcass sampling for broiler and turkey carcasses remain the nondestructive whole bird rinse which was used in the FSIS Nationwide Microbiological Baseline Data Collection Programs.

Carcasses within the same establishment and in different establishments must be sampled and analyzed in the same manner if the results are to provide a useful measure of process control across the nation. It is imperative that all like establishments adhere to the same sampling and analysis requirements detailed here, without deviation. These sampling and analytical procedures may be directly written into your establishment's individual HACCP plan.

Poultry carcasses must be sampled after the chill tank at the end of the drip line or last readily accessible point prior to packing/cut-up. This sample collection location is the same as that in the FSIS baseline studies, making samples taken here comparable to the nationwide baseline performance criteria.

#### Pre-sampling Preparation

Sample collection will be carried out by the individual designated in the establishment's written protocol for microbiological sampling. The protocol should include a check list of tasks to be performed prior to sample collection, materials needed for sample collection, random selection procedures, where the samples will be analyzed (on-site versus off-site), and other information that will aid the sample collector. As stated previously, this guideline can be a part of the plant's sample collection guidelines, but plant specific details and procedures will need to be included. Sampling supplies, such as sterile gloves, sterile sampling solutions, hand soap, sanitizing solution, etc., need to be assembled prior to beginning sample collection.

Sterile sampling solutions, Butterfield's phosphate diluent (BPD), can be stored at room temperature. However, at least on the day prior to sample collection, check solutions for cloudiness (DO NOT use solutions that are cloudy, turbid or contain particulate matter) and place the number of containers of sampling solution (BPD) that will be needed for the next day's sampling in the refrigerator.

To obtain the most accurate results, samples should be analyzed as soon after collection as possible. However, if samples must be transported to an off-site laboratory, the samples need to be maintained at refrigeration temperatures until transport, then shipped refrigerated via an overnight delivery service to the laboratory performing the analysis. Samples analyzed off-site must be picked up by the overnight courier the SAME calendar day the sample is collected. The sample must arrive at the laboratory no later than the day after the sample is collected. Samples shipped to an outside laboratory must be analyzed no later than the day after collection. The following section gives information on shipping containers and transporting samples to off-site facilities.

### *Shipping Containers and Coolant Packs*

It is important that samples fit easily into the shipping containers so that the sample bags do not break.

Correct use of the refrigerant gel-ice packs and proper packing of the shipping container are necessary so that samples arrive at the laboratory at an acceptable temperature. Frozen samples or samples which are too warm are not considered valid and must not be analyzed. Some bacteria may be damaged by temperatures that are too cold, while temperatures that are too warm can allow bacteria to reproduce. Maintaining samples at improper temperatures may cause inaccurate sample results.

The sample should be kept refrigerated, NOT FROZEN, in the shipping container prior to pickup by the courier service. The shipping container, itself, should not be used as a refrigerator. However, multiple samples (if needed) for that day may be stored in the open shipping container in the cooler or refrigerator.

#### Sampling Frequency

Sampling frequency for *E. coli* testing is determined by production volume. The required minimum testing frequencies for all but very low production volume establishments are shown in Table 1 by slaughter species.

TABLE 1.—E. COLI TESTING FREQUENCIES [a]

| | |
|---|---|
| Chickens ..... | 1 test per 22,000 carcasses. |
| Turkeys ..... | 1 test per 3,000 carcasses. |

[a] **Note:** These testing frequencies do not apply to very low volume establishments. See Table 2.

### *Very Low Volume Establishments*

Some establishments may be classified as very low volume establishments based on their annual production volume. The maximum yearly slaughter volumes for very low volume establishments are described in Table 2.

TABLE 2.—MAXIMUM YEARLY POULTRY SLAUGHTER VOLUMES FOR VERY LOW VOLUME ESTABLISHMENTS

| Slaughter species | Criteria (yearly slaughter volume) |
|---|---|
| Chickens ... | Not more than 440,000 birds. |
| Turkeys ..... | Not more than 60,000 birds. |
| Chickens and turkeys. | Not more than 440,000 total, with not more than 60,000 turkeys. |

Establishments with very low volumes are to sample the predominant species once per week, initially, until at least 13 test results have been obtained.

Once the initial criteria have been met for very low volume establishments (see APPLYING PERFORMANCE CRITERIA TO TEST RESULTS), the establishment will repeat the same sampling regime once per year, in the 3 month period of June through August, or whenever a change is made in the slaughter process or personnel.

#### Random Selection of Carcasses

Samples are to be taken randomly at the required frequency (See section on Sampling Frequency). For example, given the frequency of testing for turkeys is 1 (one) test per every 3,000 turkeys slaughtered, then if a plant slaughters 1,500 turkeys an hour, 1 (one) sample will be taken every 2 hours.

Different methods of selecting the specific carcass for sampling could be used, but all require the use of random

numbers. Methods could include: using random number tables, using calculator- or computer-generated random numbers, drawing cards, etc. When selecting the random numbers, use the method(s) currently in use at the establishment for other sampling programs, if other programs are currently underway.

The carcass for sampling must be selected at random from all eligible carcasses. If multiple lines exist, randomly select the line for sample collection for that interval. Repeat the random selection process for the next sampling interval. Each line should have an equal chance of being selected at each sampling interval.

*Poultry Carcass Selection*

The poultry carcasses will be selected at random after chilling, at the end of the drip line or last readily accessible point prior to packing/cut-up. A WHOLE carcass is required, that is, one that has not been trimmed.

Note: If more than one shift is operating at the plant, the sample can be taken on any shift, provided the following requirements are met:

Selection of TIME: Select the time, based on the appropriate sampling frequency, for collecting the sample.

Selection of CHILLER: If more than one chiller system is in operation at the time of sample collection, the chill tank from which the sample is selected must be randomly selected.

Selection of POULTRY CARCASS: Based on the frequency of sampling for your establishment, identify a carcass (selected by your random number method) from the predetermined point, and then count back five (5) carcasses and select the next carcass for sampling. Exception: If the fifth carcass is not a WHOLE (untrimmed) bird, count back an additional five carcasses for sample selection. Each carcass must have an equal chance of being selected. The reason for counting back five carcasses is to avoid any possible bias during selection.

Aseptic Techniques/Sampling

Extraneous organisms from the environment, hands, clothing, sample containers, sampling devices, etc., may lead to erroneous analytical results. Stringent requirements for microbiological analysis are necessary, therefore, use of aseptic sampling techniques and clean sanitized equipment and supplies are of utmost importance.

There should be an area designated for preparing sampling supplies, etc. A stainless steel, wheeled cart or table would be useful during sampling. A small tote or caddy could be easily moved to the location of sampling and could be used for carrying supplies, supporting sample bags when adding sterile solutions to sample bags, etc.

Sterile gloves should be used for collecting samples. The only item which may contact the external surface of the glove is the exposed sample being collected. Keep in mind that the outside surfaces of the sample container are not sterile. Do not handle the inside surface of the sterile sample containers. Do not touch anything else. The following procedure for putting on sterile gloves can be followed when collecting samples:

(a) Peel open the package of sterile gloves from the top without contaminating (touching, breathing on, contacting, etc.) the exterior of the gloves.

(b) Remove a glove by holding it from the wrist-side opening inner surface. Avoid any contact with the outer surface of the glove. Insert the washed and sanitized hand into the glove, taking care not to puncture the glove.

(c) Next, taking care not to contaminate the outer surface of the glove, repeat the step above for the hand you will use to physically handle the sample.

(d) If at any time you are concerned that a glove may be contaminated, discard it and begin again with Step (a) above.

Preparation for Sample Collection

Prior to collecting samples, review appropriate sampling steps, random selection procedures, and other information that will aid in sample collection.

On the day prior to sample collection, after checking for cloudiness/turbidity, place the number of Butterfield's phosphate diluent (BPD) containers that will be needed for the next day's sampling in the refrigerator/cooler. If samples will be shipped to an off-site facility, pre-chill shipping container and refrigerator packs (follow manufacturer's directions for gel-packs).

On the day of sampling, gather all sample collection bags, sterile gloves, sanitizer, hand soap, sterile solutions for sampling (BPD), and specific materials listed under the *Materials* section of the sample collection section for the type of carcass to be sampled. Ensure that all sampling supplies are on hand and readily available before beginning sample collection.

Label the sample bags before starting the sampling procedure. Use permanent ink. If you are using paper labels, it is important that the label be applied to the bag at normal room temperature; it will not stick if applied in the cooler.

Outer clothing (frocks, gloves, head gear, etc.) worn in other areas of the plant should be removed before entering the sampling area or preparing to collect samples. Replace outer clothing removed earlier with clean garments (i.e., laboratory coat) that have not been directly exposed to areas of the plant outside of the sampling area.

Sanitize the sample work area surfaces by wiping with a clean disposable cloth or paper towel dipped in a freshly prepared 500 ppm sodium hypochlorite solution (0.05% sodium hypochlorite) or other approved sanitizer which provides an equivalent available chlorine concentration. The sample work area surfaces must be free of standing liquid before sample supplies and/or product containers are placed on them.

Before sampling, thoroughly wash and scrub hands to the mid-forearm. Use antibacterial hand soap. If available, this should include a sanitizer at 50 ppm equivalence available chlorine. Dry the hands using disposable paper towels.

Specific Sample Collection Procedures

Chicken Carcass Rinse Sampling Procedure

*Materials*

1. 2 Sterile 3500 milliliter (ml) stomacher-type or ziplock-type bags or equivalent. (The bag must be sterile and should be large enough to hold the carcass while rinsing.)
2. 400 ml sterile, Butterfield's phosphate diluent (BPD).
3. Plastic tie wraps or equivalent (if needed to secure the bag).
4. Sterile gloves.
5. Optional—(See alternate sampling—step 10)—Sterile leak-proof container.

*Collection*

Read the sections under Pre-sampling Preparation and Preparation for Sample Collection before beginning the sampling procedure. Use the predetermined random selection procedure to select the carcass to sample. The randomly selected bird will be collected after the chiller, at the end of the drip line as follows:

1. Ensure all sampling supplies are present and have been properly labeled. An assistant may be helpful during sampling.
2. Open a large stomacher-type bag without touching the sterile interior of the bag. (Rubbing the top edges of the bag between the thumb and forefinger will cause the opening to gap for easy opening.)
3. Put on sterile gloves.
4. With one hand, push up through the bottom of the sampling bag to form

a ''glove'' over one hand with which to grab the bird, while using your other hand to pull the bag back over the hand that will grab the bird. This should be done aseptically without touching the exposed interior of the bag.

5. Using the hand with the bag reversed over it, pick up the bird by the legs (hocks) through the stomacher bag. (The bag functions as a 'glove' for grabbing the bird's legs.) Take care not to contaminate the exposed interior of the bag. Allow any excess fluid to drain before reversing the bag back over the bird. (Alternately, have an assistant hold open the bag. Using your gloved hand, pick up the bird by the legs, allow any fluid to drain, and place the bird in the sampling bag.)

6. Rest the bottom of the bag on a flat surface. While still holding the top of the bag slightly open, add the sterile BPD (400 ml) to the bag containing the carcass, pouring the solution over the carcass.

(Alternately, with the aid of an assistant holding the bag open, add the sterile BPD (400 ml) to the bag containing the carcass, pouring the solution over the carcass.)

7. Expel most of the air from the bag, then close the top of the bag. While securely holding the bag, rinse the bird inside and out using a rocking motion for 30 shakes (approximately one minute). This is done by holding the bird through the bottom of the bag with one hand and the closed top of the bag with the other hand. Hold the bird securely and rock it in an arcing motion, alternating the weight of the bird from one hand to the other (motion like drawing an invisible rainbow or arch), assuring that all surfaces (interior and exterior of the carcass) are rinsed.

8. Rest the bag with the bird on a flat surface and, while still supporting the bird, open the bag.

9. With a gloved hand, remove the carcass from the bag. Since the carcass was rinsed with a sterile solution, it can be returned to the chill tank. Be sure not to touch the interior of the bag with your gloved hand.

10. Secure the top of the bag so that the rinse fluid will not spill out or become contaminated.

(Alternately, at least 30 milliliters of rinse fluid can be poured into a sterile leak-proof container to be sent to the lab for analysis.)

11. Place the sample bag (or leak-proof container) into another bag and secure the opening of the outer bag.

12. (a) If samples are to be analyzed at an ON-SITE LABORATORY, begin sample preparation for the selected method of analysis.

(b) If samples are to be analyzed at an OUTSIDE (OFF-SITE) LABORATORY, follow the procedure in the Sample Shipment section.

Turkey Carcass Rinse Sampling Procedure

*Materials*

1. 2 Sterile 3500 ml stomacher-type or ziplock-type bags or equivalent. (The bag must be sterile and should be large enough to hold the carcass while rinsing, the bags FSIS will be using for the Salmonella sampling program measure approximately 18″ × 24″. Large turkeys should be placed in a plain, clear polypropylene autoclave bag , about 24″ × 30″ to 36″).

2. 600 ml sterile, Butterfield's phosphate diluent (BPD)

3. Plastic tie wraps or thick rubber bands or equivalent, if needed to secure sample bag

4. Sterile gloves

5. Optional—sterile, leak-proof container (see step 12 Alternate procedure)

*Collection*

Read the sections under Pre-sampling Preparation and Preparation for Sample Collection before beginning the sampling procedure. Use a predetermined random selection procedure to select the carcass to be sampled. The randomly selected bird will be collected after the chiller, at the end of the drip line as follows:

1. Ensure that all supplies are on hand and readily available. An assistant will be needed to hold the bag for collecting the bird.

2. Have an assistant open the large sterile stomacher-type bag (designated for rinsing the carcass) and be ready to receive the turkey carcass. (Rubbing the top edges of the bag between the thumb and index finger will cause the opening to gap open).

(Alternately: If no assistant is available, place the closed large sampling bag into a bucket or pail (e.g., use the bag to ''line'' a bucket like a trash-can liner), then open the bag. The bucket will be used as a holder or stand to support the bag. Do not contaminate the inner surfaces of the sampling bag.)

3. Put on sterile gloves.

4. Remove the selected turkey from the drip line by grasping it by the legs and allowing any fluid to drain from the cavity.

5. Place the turkey carcass, vent side up, into a sterile sampling bag. Only the carcass should come in contact with the inside of the bag.

6. Manipulate the loose neck skin on the carcass through the bag and position it over the neck bone area to act as a cushion and prevent puncturing of the bag. The assistant will need to support the carcass with one hand on the bottom of the bag.

7. While still supporting the bottom of the bag, have the assistant open the bag with the other hand. Alternately, rest the bottom of the bag on a pre-sanitized surface (i.e. a table), and while still supporting the carcass in the bag, open the bag with the other hand.

8. Add the sterile BPD (600 ml) to the bag containing the carcass, pouring the diluent over the carcass.

9. Take the bag from the assistant and expel excess air from the bag and close the top. While securely holding the bag, rinse the bird inside and out using a rocking motion for 30 shakes (approximately one minute). This is done by holding the carcass through the bag with one hand and the closed top of the bag with the other hand. Holding the bird securely with both hands, rock in an arcing motion alternating the weight of the bird from one hand to the other (motion like drawing an invisible rainbow or arch), assuring that all surfaces (interior and exterior of the carcass) are rinsed.

10. Hand the bag back to the assistant.

11. With a gloved hand, remove the carcass from the bag letting excess fluid drain back into the bag. Since the carcass was rinsed with a sterile solution, it can be returned to the chill tank. Be sure not to touch the interior of the bag with your gloved hand.

12. Expel excess air, taking care not to expel any rinse fluid. Secure the top of the bag so that the rinse fluid will not spill out or become contaminated.

(Alternately, *at least* 30 milliliters of rinse fluid can be poured into a sterile, leak-proof container and sent to the lab for analysis.)

13. Place the sample bag (or container) into another bag and secure the opening of the outer bag.

14. (a) If samples are to be analyzed at an ON-SITE LABORATORY, begin sample preparation for the selected method of analysis. (See Analytical Methods section.)

(b) If samples are to be analyzed at an OUTSIDE (OFF-SITE) LABORATORY, follow the procedure in the Sample Shipment section.

Sample Shipment

Samples analyzed on-site must be analyzed as soon after collection as possible. If no on-site facilities are available, the samples must be shipped the same calendar day as collected, to an outside laboratory. The samples must be analyzed no later than the day after collection.

1. Prechill shipping container by placing the open shipping container in the refrigerator at least the day before sampling.

2. Place the appropriately-labeled, double-bagged sample in the prechilled shipping container in an upright position to prevent spillage. Newspaper may be used for cushioning the sample and holding it in the upright position. Ensure that samples are maintained at refrigeration temperature. Refrigeration temperatures limit multiplication of any microorganisms present.

3. Place a corrugated cardboard pad on top of samples. The corrugated pad prevents direct contact of frozen gel packs with the samples. Next, place the frozen gel pack(s) on top of the corrugated pad. Use sufficient frozen coolant to keep the sample refrigerated during shipment to the designated laboratory. Insert foam plug and press it down to minimize shipper head space.

4. Ship samples (via overnight delivery or courier) to the assigned laboratory.

Analytical Methods

Samples must be analyzed using one of the *E. coli* (Biotype I) quantitation methods found in the Official Methods of Analysis of the Association of Official Analytical Chemists (AOAC), International, 16th edition, or by any method which is validated by a scientific body in collaborative trials against the three tube Most Probable Number (MPN) method and agreeing with the 95% upper and lower confidence limits of the appropriate MPN index.

Suggested Quantitation Schemes

For poultry rinse fluid samples, if a generic one ml plating technique is used for *E. coli* quantitation, the plate count would not have to be divided to get the count per ml of rinse fluid. To cover the marginal and unacceptable range for *E. coli* levels (described in later section), the undiluted extract (optional), a 1:10, a 1:100, a 1:1,000 and a 1:10,000 dilution should be plated, preferably in duplicate. Higher or lower dilutions may need to be plated based on the specific product.

If a hydrophobic grid membrane filtration method were used, the only difference would be filtration of one ml of the undiluted extract (optional), 1:10, 1:100, 1:1,000 and 1:10,000 dilutions.

Additional dilutions of the original extract may need to be used if a three tube MPN protocol is used. The three highest dilutions that were positive for *E. coli* are used to calculate the MPN.

Record Keeping

Results of each test must by recorded, in terms of colony forming units per milliliter rinse fluid (cfu/ml) for chicken and turkeys. A process control table or chart can be used to record the results and facilitate evaluation. Results should be recorded in the order of sample collection and include information useful for determining appropriate corrective actions when problems occur. The information needed for each sample includes date and time of sample collection, and, if more than one slaughter line exists, the slaughter line from which the sample was collected. These records are to be maintained at the establishment for twelve months and must be made available to Inspection Program employees on request. Inspection personnel review results over time, to verify effective and consistent process control.

For *E. coli* testing to be the most useful for verifying process control, timeliness is important and the record should be updated with the receipt of each new result. Detailed records should also be kept of any corrective actions taken if process control deviations are detected through microbiological testing.

*Applying Performance Criteria to Test Results*

Categorizing Test Results

*E. coli* test levels have been separated into 3 categories for the purpose of process control verification: acceptable, marginal, and unacceptable. (In the Pathogen Reduction/HACCP Regulation, the upper limits for the acceptable and marginal ranges were denoted by m and M.) These categories are described by slaughter species in Table 3.

TABLE 3.—VALUES FOR MARGINAL AND UNACCEPTABLE RESULTS FOR E. COLI PERFORMANCE CRITERIA

| Slaughter class | Acceptable range | Marginal range | Unacceptable range |
|---|---|---|---|
| Chicken | 100 cfu/ml or less | Over 100 cfu/ml but not over 1,000 cfu/ml | Above 1,000 cfu/ml. |
| Turkey | NA* | NA* | NA*. |

*The FSIS Baseline study has not been completed for this slaughter class. Levels will be set upon completion of this baseline.

To illustrate the use of Table 3, consider a chicken slaughter establishment. *E. coli* test results for this establishment will be acceptable if not above 100 cfu/ml, marginal if above 100 cfu/ml but not above 1,000 cfu/ml, and unacceptable if above 1,000 cfu/ml.

Verification Criteria

The verification criteria are applied to test results in the order that samples are collected. The criteria consist of limits on occurrences of marginal and unacceptable results.

As each new test result is obtained, the verification criteria are applied anew to evaluate the status of process control with respect to fecal contamination.

1. An unacceptable result should trigger immediate action to review process controls, discover the cause if possible, and prevent recurrence.

2. A total of more than three marginal or unacceptable results in the last 13 consecutive results also signals a need to review process controls.

This way of looking at the number of marginal and unacceptable results is described as a ''moving window'' approach in the regulation. With this approach, results are accumulated until 13 have been accrued. After this, only the most recent 13 results—those in the ''moving window''—are considered.

An example of a record of results for Chicken testing is shown (in table form) below for an establishment performing two tests per day.

| Test No. | Date | Time collected | Test result (cfu/ml) | Result unacceptable? | Result marginal? | Number marginal or unacceptable in last 13 | Pass/Fail? |
|---|---|---|---|---|---|---|---|
| 1 | 10–07 | 08:50 | 120 | No | Yes | 1 | Pass. |
| 2 | | 14:00 | 10 | No | No | 1 | Pass. |
| 3 | 10–08 | 07:10 | 150 | No | Yes | 2 | Pass. |
| 4 | | 13:00 | 50 | No | No | 2 | Pass. |
| 5 | 10–09 | 10:00 | ([1]) | No | No | 2 | Pass. |
| 6 | | 12:20 | 10 | No | No | 2 | Pass. |
| 7 | 10–10 | 09:20 | 800 | No | Yes | 3 | Pass. |
| 8 | | 13:30 | 10 | No | No | 3 | Pass. |
| 9 | 10–11 | 10:50 | 10 | No | No | 3 | Pass. |
| 10 | | 14:50 | 10 | No | No | 3 | Pass. |
| 11 | 10–14 | 08:40 | 500 | No | Yes | 4 | Fail. |
| 12 | | 12:00 | 30 | No | No | 4 | Fail. |
| 13 | 10–15 | 09:30 | 10 | No | No | 4 | Fail. |
| 14 | | 15:20 | 10 | No | No | 3 | Pass. |
| 15 | 10–16 | 07:30 | 10 | No | No | 3 | Pass. |
| 16 | | 11:40 | 10 | No | No | 3 | Pass. |
| 17 | 10–17 | 10:20 | 1,200 | Yes | No | 3 | Fail. |

[1] Negative.

The following observations can be made on this example:

1. As of 10–14 at 08:40, there are four marginal or unacceptable results in the last 11 results, which exceeds the limit of 3 in 13 consecutive tests.

2. The limit of 3 in 13 also is exceeded for the next two tests, but since no new marginal or unacceptable result has occurred, these failures should not be treated as evidence of a new problem. The log or documentation of corrective action taken for the first failure should be adequate to verify that the deviation or problem, if any, was addressed.

3. On 10–15 at 15:20 the number of marginal or unacceptable results in the last 13 tests goes down to 3 because the marginal result for 10–07 at 08:50 is dropped replaced by an acceptable result as the 13-test window moves ahead 1 test.

4. The result for 10–17 at 10:20 exceeds 1,000 and is unacceptable.

The Figure 1 shows the same results as above displayed in chart form. The numbers along the horizontal axis of the graph (x-axis) refer to the test number in the chart above. The information for each test result, such as the time and date the sample was collected could also be recorded on the chart.

BILLING CODE 3410–DM–P

Figure 1. Example of *E. coli* results using a control chart

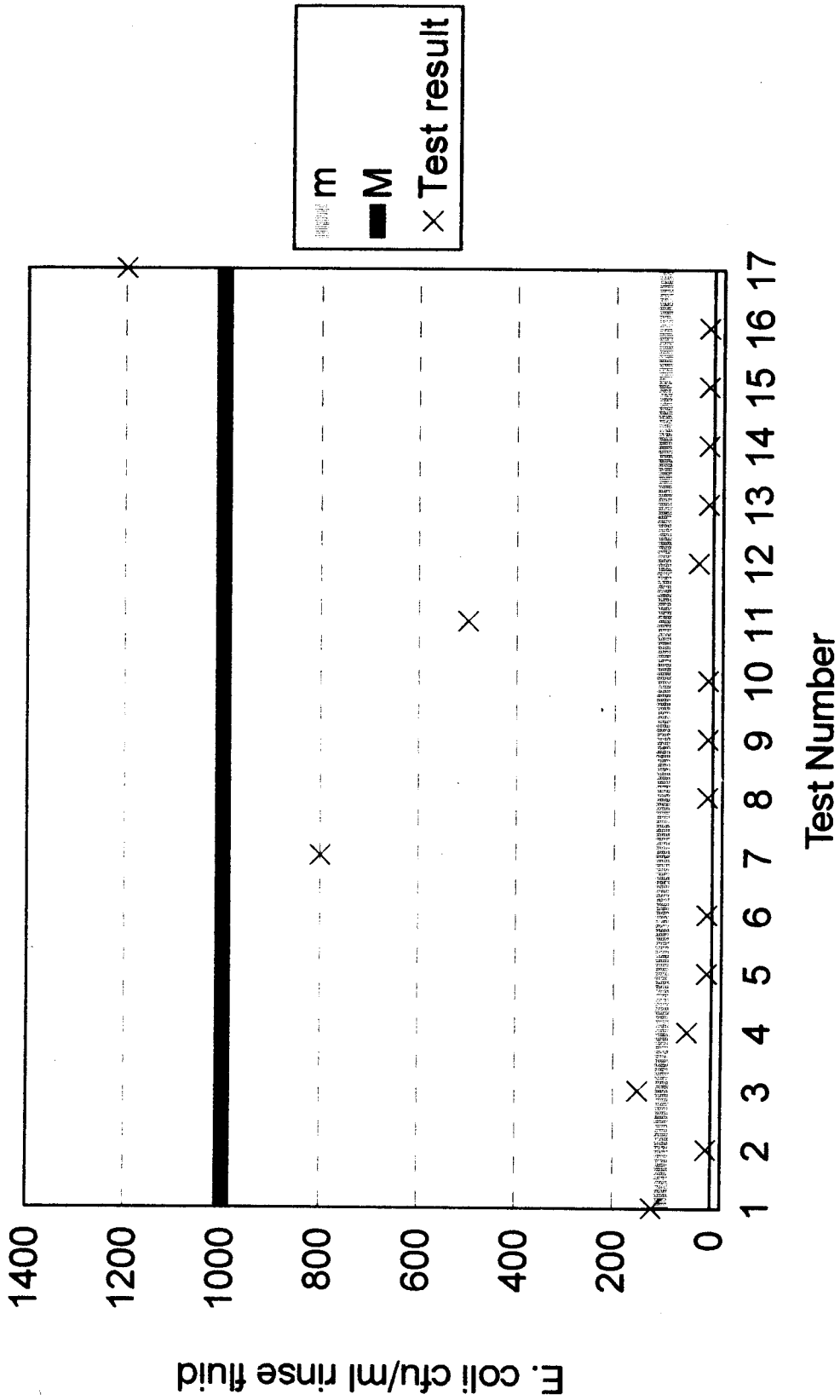


BILLING CODE 3410–DM–C

Note: The following Supplement will not appear in the Code of Federal Regulations.

Supplement—Final Regulatory Impact Assessment for Docket No. 93–016F, ''Pathogen Reduction; Hazard Analysis and Critical Control Point (HACCP) Systems.''

Table of Contents

I. Introduction
A. Purpose
B. Methodology
C. Summary Comparison of Costs and Benefits—Proposal to Final
II. Regulatory Alternatives
A. Market Failure
B. General Regulatory Approaches
C. Need For Improved Process Control
D. Regulatory Alternatives for Process Control
1. Mandatory HACCP
2. Alternatives to Mandatory HACCP
E. Comments on Analysis of Regulatory Alternatives
III. Summary of Impacts
A. Introduction
B. Net Benefit Analysis
C. Impact on ''Smaller'' Businesses
D. Effect on Retail Price
E. Impact on International Trade
F. Impact on Agency Costs
G. Impact on State Programs
H. Consumer Welfare Analysis
IV. Analysis of Public Health Benefits
A. Introduction
B. FSIS Risk Assessment
C. Risk Assessment Framework
D. FSIS Data Initiatives
E. ARS Food Safety Research Program
F. Analysis of Comments on Public Health Benefits
1. Incidence of Foodborne Illness
2. Cost of Foodborne Illness
3. Percentage of Foodborne Illness and Cost of Foodborne Illness Attributable to Meat and Poultry
4. Pathogens Addressed by the Rule
5. Effectiveness of the Rule in Reducing Pathogens
6. Estimated Reduction in Cost of Foodborne Illness
G. Summary
V. Cost Analysis
A. Introduction
B. Methodology for Cost Analysis
C. Regulatory Flexibility
D. Final Cost Estimates
1. Sanitation Standard Operating Procedures
2. Costs of Meeting Pathogen Reduction and Microbial Sampling
3. HACCP Programs—Plan Development and Annual Reassessment Costs
4. HACCP Programs—Recordkeeping Costs
5. HACCP Programs—Training Costs
6. HACCP Programs—Impact on Total Quality Control/Overtime Issues
E. Summary of Costs for Low Volume Producers

Appendix A to Final Regulatory Impact Assessment

## I. Introduction

### *A. Purpose*

In docket No. 93–016F, the Food Safety and Inspection Service (FSIS) is promulgating new regulations that require an estimated 9,079 inspected meat and poultry establishments to adopt a Hazard Analysis and Critical Control Points (HACCP) processing control system covering all production operations within 3½ years of final rule publication. The regulation also requires that all 9,079 establishments adopt and implement standard operating procedures (SOP's) for sanitation and establishes, for the first time, food safety performance standards for microorganisms on raw meat and poultry products. This final rule establishes pathogen reduction performance standards for *Salmonella* that are established using the current pathogen prevalence as determined by the national baseline studies. These standards are not directed at judging whether specific lots of a product are adulterated under the law. Rather, compliance with the standards will be determined by a statistical evaluation of the prevalence of bacteria in each establishment's products. FSIS will implement sampling programs to determine compliance with the *Salmonella* standard. The rule does not require inspected establishments to test for *Salmonella*. The pathogen reduction performance standards apply to 2,682 slaughter establishments and another estimated 2,840 establishments that produce raw ground product but do not have slaughter operations.

The final rule also requires that all slaughter establishments test for generic *E. coli* to verify process control for fecal contamination during slaughter and sanitary dressing. Results will be measured against performance criteria established from the national baseline surveys. Under this final rule, the 2,682 inspected slaughter establishments will be required to verify by microbial testing that they are controlling their slaughter and sanitary dressing processes in accordance with the performance criteria. The rule establishes testing frequencies based on production levels, but does not establish the performance criteria as enforceable regulatory standards. As the preamble points out, the criteria will be flexible and subject to change as FSIS and the industry gain experience with them and accumulate more data on establishment performance. The criteria are intended specifically to provide an initial basis upon which slaughter establishments and FSIS can begin to use microbial testing to evaluate the adequacy of establishment controls for slaughter and sanitary dressing procedures.

The objective of this regulation is to reduce the risk of foodborne illness from meat and poultry. The focus is on reducing and eventually minimizing the risk from the following four pathogens:

- *Campylobacter jejuni/coli.*
- *Escherichia coli O157:H7.*
- *Listeria monocytogenes.*
- *Salmonella.*

This document is the final Regulatory Impact Analysis (RIA) prepared in compliance with the provisions of Executive Order 12866 and analyses requirements of the Regulatory Flexibility Act (P.L. 96–354) and the Unfunded Mandates Reform Act (P.L. 104–4). The purpose of this final RIA is to evaluate alternatives to and costs and benefits associated with a mandatory HACCP-based regulatory program for all meat and poultry establishments under inspection.

### *B. Methodology*

The methodology used to develop cost estimates for this final RIA is relatively straightforward. The costs estimates are based on data for average wages, the cost of specific processing equipment or the cost of conducting specific laboratory analyses.

The benefits analysis is less straightforward. The analysis has defined regulatory effectiveness as the percentage of pathogens eliminated at the manufacturing stage. The benefits analysis concludes that there is insufficient knowledge to predict with certainty the effectiveness of the proposed rule. Without specific predictions of effectiveness, FSIS has calculated projected health benefits for a range of effectiveness levels.

The link between regulatory effectiveness and health benefits is the assumption that a reduction in pathogens leads to a proportional reduction in foodborne illness. FSIS has presented the proportional reduction calculation as a mathematical expression that facilitates the calculation of a quantified benefit estimate for the purposes of this final RIA. FSIS has not viewed proportional reduction as a risk model that would have important underlying assumptions that merit discussion or explanation. For a mathematical expression to be a risk model, it must have some basis or credence in the scientific community. That is not the case here. FSIS has acknowledged that very little is known about the relationship between pathogen levels at the manufacturing

stage and dose, i.e., the level of pathogens consumed.

There are many factors that play important roles in the actual link between pathogen levels at the manufacturing stage and frequency of foodborne illness. First, the effectiveness definition of ''percentage of pathogens reduced'' can refer to the percentage of packages that contain pathogens or the level of pathogens within packages. The pathogens-to-illness relationship is further complicated because cross-contamination in kitchens is believed to play a major role. It can not be assumed that a reduction in the number of pathogens present in a package of meat or poultry will prevent a cross-contamination related illness. On the other hand, given that the number of consumed pathogens necessary to cause illness (threshold) can be different for every possible pathogen or individual combination, a reduction in pathogen levels at the time of packaging may prevent illness for many cross-contamination scenarios.

These types of unknowns illustrate why the relationship between pathogen levels and foodborne illness levels remains unknown. As stated above, without a known relationship, FSIS has used the proportional reduction assumption to provide a quantified estimate, recognizing that the real relationship is probably different for each pathogen and category of meat and poultry product.

Risk minimization as the objective of this rule means the elimination of most foodborne illness caused by the contamination of meat and poultry products in inspected establishments by any of the four pathogens listed above. The reduction in pathogens needed to do this is unknown and would vary for individual pathogens and products.

This final RIA includes a discussion of the status of risk assessment for foodborne pathogens that responds to the new Departmental guidelines for preparing risk assessments contained in Departmental Regulation 1521–1, December 21, 1995. Although the statutory requirements for risk analysis included in the Federal Crop Insurance Reform and Department of Agriculture Reorganization Act of 1994 (P.L. 103–354) do not apply to this final rule, there were public comments on the need for additional risk assessment or risk analysis. This final RIA includes the Agency's response to those comments.

On February 3, 1995, FSIS published a preliminary RIA as part of the proposed Pathogen Reduction HACCP rule (60 F.R. 6871). The preliminary RIA announced the availability of a detailed supplemental cost analysis, titled ''Costs of Controlling Pathogenic Organisms on Meat and Poultry,'' which was available from the FSIS Docket Clerk during the comment period. This final RIA will refer to the analysis published with the proposed rule and the supplemental cost analysis collectively as the ''preliminary analysis.''

During the public comment period the Department conducted a number of public hearings, technical conferences and information briefings. On May 22, 1995, the Agency conducted a special hearing in Kansas City dealing with the impacts of the proposed rule on small businesses. In July 1995, FSIS conducted a survey of the State inspection programs to collect additional information to assess the impact on State establishments.

This final RIA is based on the preliminary RIA, the supplemental cost analysis, all written public comments, the records from public hearings including the meeting on small business impacts, the survey of State programs, and any new information or data that have become available during the comment period. The analysis also refers specifically to cost estimates developed by the Research Triangle Institute (RTI) during personal interviews with nine establishments that previously participated in the FSIS HACCP Pilot Program. The RTI report, *HACCP Pilot Program Cost Findings,* August 31, 1994, which was referred to in both written and public hearing comments were developed under contract to FSIS in 1994.

### *C. Summary Comparison of Costs and Benefits—Proposal to Final*

FSIS estimated that the proposed rule would have 20-year industry costs of $2.2 billion. Those costs are presented in Table 1, organized by the regulatory components identified in the proposal.

The estimated costs for the final rule are also presented in Table 1. For some of the regulatory components, it is easy to track the costs from the proposal to the final rule. For example, the costs for Sanitation SOP's remain essentially the same. The reduction from $175.9 to $171.9 million reflects the change in implementation period from 90 days to six months.

The costs for developing and implementing HACCP plans are also directly comparable. The estimated cost has increased for the HACCP component of plan development. FSIS has increased its estimate for this cost after reviewing the public comments and assessing the overall impact on plan development costs of the decisions to eliminate the requirements for implementing time/temperature and antimicrobial treatment requirements prior to HACCP implementation. In the preliminary analysis, the cost for developing HACCP plans was reduced because of the experience that establishments would have gained in developing their plans for implementing time/temperature and antimicrobial treatment requirements.

TABLE 1.—COMPARISON OF COSTS—PROPOSAL TO FINAL

[$ Millions—Present Value of 20-year Costs]

| Regulatory component | Proposal | Final |
|---|---|---|
| I. Sanitation SOP's | 175.9[a] | 171.9 |
| II. Time/Temperature Requirements | 45.5 | 0.0 |
| III. Antimicrobial Treatments | 51.7 | 0.0 |
| IV. Micro Testing | 1,396.3[b] | 174.1 |
| V. | | |
| Compliance with *Salmonella* standards | Not Separately Estimated[c] | 55.5–243.5 |
| Compliance with generic *E. coli* criteria | Not Applicable | Not Separately Estimated |
| VI. HACCP: | | |
| Plan Development | 35.7 | 54.8 |
| Annual Plan Reassessment | 0.0 | 8.9 |
| Recordkeeping (Recording, Reviewing and Storing Data) | 456.4 | 440.5[d] |
| Initial Training | 24.2 | 22.7[d] |
| Recurring Training | 0.0 | 22.1[e] |
| VII. Additional Overtime | 20.9 | 17.5[d] |

TABLE 1.—COMPARISON OF COSTS—PROPOSAL TO FINAL—Continued

[$ Millions—Present Value of 20-year Costs]

| Regulatory component | Proposal | Final |
|---|---|---|
| Subtotal—Industry Costs | 2,206.6 | 968.0–1,156.0 |
| VIII. FSIS Costs | 28.6[f] | 56.5 |
| Total | 2,235.2 | 1,024.5–1,212.5 |

[a] The preliminary analysis included a higher cost estimate for sanitation SOP's ($267.8 million) that resulted because of a programming error. The cost estimate of $175.9 million is based on an effective date of 90 days after publication.

[b] The preliminary analysis was based on the premise that microbial testing would be expanded to cover all meat and poultry processing after HACCP implementation. The proposed rule only required sampling for carcasses and raw ground product. Thus, the cost estimate of $1,396.3 million was higher than the actual cost of the proposed sampling requirements.

[c] The preliminary analysis accounted for some of the cost of complying with the new standards under the regulatory components of micro testing, antimicrobial treatments, and time and temperature requirements.

[d] These costs are slightly different from the proposal because of changes in the implementation schedule.

[e] FSIS added costs for recurring training based on the review of public comments.

[f] Based on current estimates for the cost of training, inspector upgrades, and $0.5 million for annual HACCP verification testing.

Table 1 shows that FSIS has added two categories of HACCP costs that were not included in the preliminary cost analysis. A cost for recurring annual HACCP training was added in response to comments that there would be recurring costs because of employee turnover. FSIS also added a minimal cost for annual reassessment of HACCP plans, although the Agency believes that reassessment will be negligible for establishments successfully operating under a HACCP plan.

Table 1 shows that the proposed requirements for time and temperature specifications and antimicrobial treatments have not been included in the final rule. The preliminary analysis treated these items as interim costs that were incurred prior to HACCP implementation. For the time and temperature requirements, the preliminary analysis identified both one-time capital equipment costs and recurring recordkeeping costs. The time and temperature recordkeeping costs were assumed to become part of the HACCP recordkeeping costs. The recurring costs for antimicrobials were assumed to end with HACCP implementation. The preliminary analysis indicated that at the time of HACCP implementation, the slaughter establishments would make a decision on whether to continue the antimicrobial treatments and employ other methods to reduce the microbial load on carcasses. The preliminary analysis did not, however, include a cost component for either continuing the antimicrobial treatments or adding alternative pathogen reduction methods.

Under the micro testing component, the final rule requires that all 2,682 slaughter establishments implement microbial sampling programs using generic *E. coli*. The 20-year cost of this requirement is $174.1 million. After HACCP implementation including validation that the *E. coli* performance criteria are being met, establishments may use alternate testing programs unless FSIS specifically objects. In addition, in the period prior to mandatory HACCP, FSIS will consider exemptions on a case-by-case basis for establishments that are currently using an alternative *E. coli* sampling frequency if the establishment can provide data demonstrating the adequacy of its existing program. The cost estimate of $174.1 million assumes that all slaughter establishments continue to test at the frequencies outlined in the final rule.

Up to this point, all the costs discussed have been predictable in the sense that they refer to a specific requirement directing all establishments or a specific category of establishments to take a well-defined action. FSIS has developed point estimates for all predictable costs. In contrast, the pathogen reduction performance standards for *Salmonella* do not prescribe a set of actions that establishments must take. Because the standards are set using the national prevalence estimates from the baseline studies, the Agency is also not able to predict how many establishments are already meeting the standards or how many will have to modify their current operations to comply.

The cost analysis in Section V recognizes that the performance standards create a set of potential costs for 5,522 establishments, 2,682 slaughter establishments and another estimated 2,840 establishments that produce raw ground product but do not have slaughter operations. The analysis estimates potential costs by developing two scenarios that lead to a range of possible costs depending on how the different industry sectors will respond to the new standards and depending on how many establishments will need to modify their production processes in order to comply.

Reducing pathogens for slaughter establishments involves either modifying the incoming animals or birds, improving the dressing procedures so as to reduce contamination during procedures such as hide removal and evisceration, or using interventions such as antimicrobial treatments to kill or remove the pathogens following contamination. For many establishments, the process of implementing HACCP programs may, by itself, improve the dressing procedures sufficiently to meet the new standards. Other establishments may have to choose between slowing production lines, modifying some attribute of their incoming live animals or birds, or adding post-dressing interventions such as the new steam vacuum process or antimicrobial rinses.

The 2,840 raw ground processing operations will have to control their incoming ingredients either by conducting their own testing or by requiring that suppliers meet purchase specifications. The cost analysis also recognizes that even though the rule does not require the 2,682 slaughter establishments to test for *Salmonella*, some establishments may conduct their own *Salmonella* testing programs to avoid failing a series of tests conducted by the Agency. Thus, it can be argued that the Agency's intent to implement establishment specific testing for *Salmonella* is indirectly requiring the industry to routinely monitor their *Salmonella* levels to assure they will be in compliance.

As shown in Table 1, the two scenarios developed in the cost analysis lead to a range in cost estimates of $55.5 to $243.5 million to comply with the new pathogen reduction standards. Some of these costs are contained in the

Table 1 proposal costs of $51.7 for antimicrobial treatments and the $1,396.3 for micro testing that included the cost of having 5,522 establishments conduct daily *Salmonella* testing for each species slaughtered and each variety of raw ground product produced.

The two cost scenarios were developed to illustrate potential costs for compliance with standards established using the current pathogen prevalence as determined by the national baseline studies. These standards move the Agency's regulatory program in the direction of meeting the food safety objective of minimizing the risk of foodborne illness from pathogens that contaminate meat and poultry products. The Agency has stated its intent to establish tighter standards over time. The Agency recognizes that future tighter standards could impose a new set of compliance costs. To illustrate, where the use of hot water rinses may be adequate to assure compliance with the *Salmonella* standards as established for this rule, such rinses may not be adequate to assure compliance with future standards. Any change in the standards will, however, be implemented through additional rulemaking. At that time the Agency will have extensive data on the distribution of pathogens by establishment and better data on the cost and effectiveness of different interventions. These data enhancements will allow for improved cost analysis of future standard setting activities. Inspected establishments need to consider the Agency's overall food safety objectives when making decisions on capital investments designed to assure compliance with the food safety standards established by this rulemaking.

The cost analysis in Section V also recognizes that the performance criteria for generic *E. coli* create a set of potential costs for 2,682 slaughter establishments. A line for these costs is shown in Table 1 along with the entry that these costs were not separately quantified.

As discussed in Section V, the anticipated actions to comply with the generic *E. coli* criteria are the same as the anticipated actions to comply with the standards for *Salmonella*. FSIS has concluded that if the low cost scenario for *Salmonella* compliance proves to be more accurate, then the Agency would expect to see some compliance costs for the generic *E. coli* performance criteria. If the high cost scenario is correct, then the compliance actions taken to assure compliance with the *Salmonella* standards should also assure compliance with the generic *E. coli* criteria.

Finally, Table 1 includes a cost of $17.5 million associated with additional overtime charges for inspection. While it is recognized that final decisions on the future of the Agency's Total Quality Control (TQC) program have not been made, this analysis includes a conservative impact assumption that the existing TQC regulations will be withdrawn.

Both the preliminary and final analysis identify a maximum potential 20-year public health benefit from $7.13 to $26.59 billion that is tied to eliminating establishment-related contamination from four pathogens on meat and poultry. The contamination from these four pathogens at the manufacturing stage leads to an estimated annual cost of foodborne illness ranging from $0.99 billion to $3.69 billion. The maximum 20-year benefit results from eliminating this annual cost of foodborne illness beginning in the fifth year after publication. Although there is reason to believe significant benefits will be generated during the first four years, for analytical purposes FSIS used the conservative estimate that benefits do not begin until all establishments have HACCP systems in place and pathogen reduction standards for *Salmonella* apply to all establishments that slaughter or produce raw ground product.

There are two principle reasons why benefits will begin to accrue before the fifth year. First, the HACCP requirements and *Salmonella* standards apply to large establishments at 18 months and small establishments at 30 months. The large slaughter establishments account for over 74 percent of total carcass weight. Second, the generic *E. coli* testing requirements are effective six months after publication. The generic *E. coli* results will provide both establishment management and inspection program personnel a tool by which to assess establishments' control over slaughter and sanitary dressing procedures. Although the generic *E. coli* criteria are not being established as regulatory standards, FSIS believes their use will lead to improved control over slaughter and sanitary dressing procedures which will, in turn, lead to reductions in fecal contamination and corresponding reductions in contamination by enteric pathogens. Rather than attempt to estimate the benefits associated with reduced contamination resulting from use of generic *E. coli* testing, this analysis has assumed public health benefits begin in the fifth year. By that time all establishments have had an opportunity to adjust their *E. coli* sampling programs based on their HACCP programs.

The low and high estimates for potential benefits are due to the current uncertainty in estimates for incidence of foodborne illness and death. If the low potential benefit estimate is correct, the analysis shows that the new HACCP-based program must reduce pathogens by 15 to 17 percent for benefits to outweigh projected costs. If the high estimate is the correct estimate, the new program needs to reduce pathogens by only 4 to 5 percent to generate net societal benefits.

As discussed in Section III, there are other benefits to this rule that have not been quantified. Examples include increased public protection from physical hazards and the increased production efficiency that accompanies improved process control.

In the preliminary analysis FSIS took the position that quantified pathogen reduction benefits were related to the overall proposed HACCP-based regulatory program and that there was no way to distribute benefits among the five different components that made up the proposed rule. Under the proposed rule it was essentially impossible to determine the proportion of pathogen reduction benefits that could be attributable to the proposed pathogen reduction standards versus the proposed antimicrobial treatments or time-temperature requirements or the proposed mandatory HACCP programs. Given the revised structure of the final rule, this analysis attributes pathogen reduction benefits to the requirements that all establishments implement HACCP systems and that if those systems are implemented in slaughter establishments or establishments shipping raw ground product, they must have critical limits set to assure compliance with the new pathogen reduction standards for *Salmonella*. However, as discussed above, FSIS believes that pathogen reduction benefits will begin to occur when establishments start using the generic *E. coli* results to assess their control over slaughter and sanitary dressing procedures.

FSIS believes that the Sanitation SOP's component of this final rule has significant benefits in terms of increased productivity for inspection resources. The HACCP component also has productivity benefits in addition to public health benefits. One of the reasons FSIS has not yet achieved a program that can focus appropriate resources on the risks of microbial pathogens is that in recent years

national budget problems have provided limited increases in Agency resources compared to the increase in its responsibilities generated by industry growth, the Federal takeover of more State programs, and new food production technologies and products. For most of its history, the inspection program was able to obtain additional resources when it took on new responsibilities. Now FSIS is faced with taking on new responsibilities with the same resources.

The final rule is a necessary component of an FSIS management strategy that will raise the productivity of current resources so that the program can maintain all its consumer protection objectives. Raising productivity requires raising outputs, reducing inputs or any combination of the two that gets more done for less. Productivity can be increased in today's inspection program by: (1) focusing resource use on the basis of risk, giving the highest priority to safety objectives; (2) clarifying the respective responsibilities of government and industry to assure the best use of government resources; and (3) designing new methods of inspection that are more efficient than existing inspection but which maintain or improve consumer protection.

The Sanitation SOP's and HACCP requirements are designed to accomplish objectives in all three of the above areas. With SOP's FSIS can monitor sanitation plans with fewer resources than it takes to conduct comprehensive sanitation reviews. The benefit of the SOP's is, therefore, the capacity to reallocate inspection resources to other activities where the payoff in terms of reducing the risk of foodborne illness may be greater. With SOP's there is less likelihood that establishments will be able to substitute the inspector's sanitation review for their own sanitation program. Similarly, with HACCP there is less likelihood that firms can use inspection as a substitute for their own control programs. In both cases productivity is enhanced by clarifying responsibilities. The benefits associated with increased productivity are difficult to quantify because the precise reallocation of inspection resources is not yet clear.

Finally, with the implementation of this rule, FSIS intends to introduce new methods of inspection that are more efficient than those currently in place. As noted above, more efficient methods is the third way in which productivity can be increased in the inspection system.

## II. Regulatory Alternatives

### *A. Market Failure*

Consumers make choices about the food they purchase based upon factors such as price, appearance, convenience, texture, smell, and perceived quality. In an ideal world, people would be able to make these decisions with full information about product attributes and choose those foods which maximize their satisfaction. In the real world, however, information deficits about food safety complicate consumer buying decisions.

Since all raw meat and poultry products contain microorganisms that may include pathogens, raw food unavoidably entails some risk of pathogen exposure and foodborne illness to consumers. However, the presence and level of this risk cannot be determined by a consumer, since pathogens are not visible to the naked eye. Although they may detect unwholesomeness from obvious indications such as unpleasant odor or discoloration caused by spoilage microorganisms, consumers cannot assume products are safe in the absence of spoilage. They simply have no clear-cut way to determine whether the food they buy is safe to handle and eat.

When foodborne illness does occur, consumers often cannot correlate the symptoms they experience with a specific food because some pathogens do not cause illness until several days, weeks or even months after exposure. Thus, food safety attributes are often not apparent to consumers either before purchase or immediately after consumption of the food. This information deficit also applies to wholesalers and retailers who generally use the same sensory tests—sight and smell—to determine whether a food is safe to sell or serve.

The societal impact of this food safety information deficit is a lack of accountability for foodborne illnesses caused by preventable pathogenic microorganisms. Consumers often cannot trace a transitory illness to any particular food or even be certain it was caused by food. Thus, food retailers and restaurateurs are generally not held accountable by their customers for selling pathogen-contaminated products and they, in turn, do not hold their wholesale suppliers accountable.

This lack of information applies equally to small businesses. Some small businesses have argued for exemption from the rule because they sell most of their product to family, friends and neighbors, but they are overlooking the fact that perhaps the majority of foodborne illness victims may believe they had some type of flu virus or other illness and have no idea that their illness was foodborne and, if they do, they have no idea as to the source. Without feedback, (i.e., without a connection of product to illness), there is no market where buyers and sellers have sufficient information upon which to judge purchase decisions. Without feedback there is insufficient incentive to make substantial improvements in process control.

This lack of marketplace accountability for foodborne illness means that meat and poultry producers and processors have little incentive to incur extra costs for more than minimal pathogen controls. The widespread lack of information about pathogen sources means that businesses at every level from farm to final sale can market unsafe products and not suffer legal consequences or a reduced demand for their product. An additional complication is that raw product is often fungible at early stages of the marketing chain. For example, beef from several slaughterhouses may be combined in a batch of hamburger delivered to a fast food chain. Painstaking investigation by public health officials in cases of widespread disease often fails to identity foodborne illness causes; in half the outbreaks the etiology is unknown.

Most markets in industrialized economies operate without close regulation of production processes in spite of consumers having limited technical or scientific knowledge about goods in commerce. Branded products and producer reputations often substitute for technical or scientific information and result in repeat purchases. Thus, brand names and product reputations become valuable capital for producers.

In the U.S. food industry, nationally recognized brand names have historically provided significant motivation for manufacturers to ensure safe products. In recent years, more and more raw meat and poultry have come to be marketed under brand names. Nevertheless, not even all brand name producers produce their products under the best available safety controls. Further, a significant part of meat and poultry, particularly raw products, are not brand name products and are not produced under conditions that assure the lowest practical risk of pathogens.

The failure of meat and poultry industry manufacturers to produce products with the lowest risk of pathogens and other hazards cannot be attributed to a lack of knowledge or appropriate technologies. The science and technology required to significantly

reduce meat and poultry pathogens and other hazards is well established, readily available and commercially practical.

Explanations for why a large portion of the meat and poultry industry has not taken full advantage of available science and technology to effectively control manufacturing processes include the following:

1. Meat and poultry processing businesses are relatively easy to enter; there are no training or certification requirements for establishment operators. Consequently, the level of scientific and technical knowledge of management in many establishments is minimal.

2. The industry is very competitive and largely composed of small and medium-sized firms that have limited capital and small profits.

3. Management in many of these establishments has little incentive to make capital improvements for product safety because results from that investment are not distinguishable by customers and therefore yield no income.

In spite of these barriers, many industry establishments do produce meat or poultry products using process controls that assure the lowest practical risk of pathogens and other hazards.

FSIS has concluded that the lack of consumer information about meat and poultry product safety and the absence of adequate incentives for industry to provide more than minimal levels of processing safety represents a market failure requiring Federal regulatory intervention to protect public health.

*B. General Regulatory Approaches*

The problem of microbial pathogens in meat and poultry has become increasingly apparent. Documented cases of foodborne illness each year, some of which have resulted in death, represent a public health risk that FSIS judges to be unacceptable. Within existing authorities there are four broad regulatory approaches the Department could use to address this unacceptable public health risk.

- Market Incentives.
- Information and Education.
- Voluntary Industry Standards.
- Government Standards.

The final rule represents the fourth approach.

The above discussion on market failure summarizes why FSIS has concluded that the market will not address the public health risk resulting from microbial pathogens in meat and poultry.

The role and effectiveness of consumer and food service worker education in assuring food safety was raised in public comments. For example, comments suggested that since most foodborne illness involves temperature abuse or consumer/food handler mishandling, consumer education offers the most cost-effective approach. FSIS sees a clear role for education and agrees that education is essential for assuring food safety. However, experience has shown that education alone has limited effectiveness in reducing foodborne illness. The effectiveness of education for food safety, and, indeed, for improving diets and other food related behavior, has not been demonstrated. FSIS views education as a valuable adjunct to other regulatory approaches, but it has no evidence that a major increase in education expenditures will produce the behaviors required to reduce foodborne illness.

A voluntary industry standard would call for the formation of a standards setting group, such as the American National Standards Institute (ANSI) to develop and publish a voluntary standard. Compliance with such a voluntary standard would be determined by third-party testing and certification. For example, Underwriter's Laboratory (UL) tests and certifies electronic components for industry-wide standards. FSIS has not seen any evidence that the industry is prepared to undertake, or even desires a voluntary standards approach. This is understandable. Because the principles underlying the safe production of meat and poultry are the same regardless of who administers the standards, an industry administered system is likely to be more expensive and less effective than a government one. The lack of power to mandate participation reduces the value of standard setting to participants, since foodborne illness episodes attributable to non-participants tend to raise suspicion of all similar products. Further, the industry would be called upon to pay the enforcement cost which under the present rule would be paid by the government.

For these reasons, the Department concludes that mandatory process control regulations offer the best approach for addressing this unacceptable public health risk.

*C. Need For Improved Process Control*

FSIS has determined that effective process control is needed throughout the meat and poultry industry in order to minimize pathogen contamination and control other health hazards. Accordingly, a regulatory strategy has been formulated to mandate process control improvements to achieve immediate reductions and an eventual minimization of the risk of meat and poultry pathogens, chemical, and physical hazards in the nation's food supply. This strategy is supported by consumers, scientists, and the majority of meat and poultry industry processors who already recognize the benefits of good process control.

Process control is a proactive strategy that all segments of industry can undertake to anticipate manufacturing problems in advance and prevent unsafe foods from being produced. In practice, process control is a systematic means to:

- Identify and control production hazards.
- Determine control points in the processing system.
- Establish standard measures for each control point.
- Set procedures for establishment workers to monitor requirements.
- Provide clear instructions for appropriate corrective actions when a control point goes out of control.
- Establish record-keeping to document control point measurements.
- Provide procedures for verification tests to ensure that the system continues to operate as planned.

The process control strategy summarized in this paper is founded on three principles:

1. USDA regulatory policy should be focused on providing a solution to meat and poultry biological, chemical, and physical hazards that present the highest public health risks.

2. It is essential that the Nation's food safety system address pathogenic microorganisms which present the greatest foodborne risk to human health.

3. These pathogens and resulting risks of foodborne illness can be largely avoided by uniform meat and poultry industry efforts to attain and maintain more effective methods of control during the manufacturing process.

The focus of this strategy is explicitly on prevention; it is designed to prevent the production of defective product as opposed to more costly and less effective detect-and-condemn methods.

Process control is not a substitute for inspection any more than inspection could be a substitute for process control. This distinction is important because Federal inspection was never intended to be—and cannot be—the front-line control for food safety in meat and poultry processing establishments. Safety controls must be built into the manufacturing process and be administered continuously by industry. The objective of inspection in a process control environment is to assure that those controls are present, adequate, and properly used.

To summarize, the process control regulatory strategy promulgated by this rule will among its other well established attributes, correct two important deficiencies in the nation's current food safety effort. It will: (1) provide industry the tools and incentive to reduce meat and poultry pathogens as a means to improve food safety, and (2) help focus Federal inspection on the highest product, process and establishment risks, and, at the same time, clarify that the industry is responsible for producing safe meat and poultry, while the Government's role is oversight.

Factors Considered in Evaluating a Process Control Strategy

The process control regulatory strategy was evaluated using five factors for effectiveness. A processing control program is effective if it:

1. Controls production safety hazards.
2. Reduces foodborne illness.
3. Makes inspection more effective.
4. Increases consumer confidence.
5. Provides the opportunity for increased productivity.

The following sections discuss these five effectiveness factors that have been applied to evaluate process control alternatives.

Controls Production Safety Hazards

Process control is a system for identifying food hazards and reducing or eliminating the risks they present. In operation, control points are established in a food production line where potential health hazards exist; management of these points has proven to be effective in reducing the probability that unsafe product will be produced. Ongoing records of each process control will enable establishment managers and quality control personnel to spot trends that could lead to problems and devise a strategy that prevents them before they occur.

Detection by end product testing is not a viable alternative to process control because it only sorts good product from bad and does not address the root cause of unacceptable foods. Additionally, keeping ''bad'' foods out of commerce through sorting end product is possible only when tests and standards for sampling are well established and it is practical only where the ''test'' is not expensive because sorting requires a huge number of samples for reliability.

Reduces Foodborne Illness

As industry improves its control over the safety aspects of meat and poultry production, foodborne illness will begin to decline. This is the principal non-negotiable goal for both USDA and industry.

The precise occurrence of human health problems attributed to pathogenic microorganisms or other potential foodborne hazards, such as chemical contaminants, animal drug residues, pesticides, extraneous materials, or other physical contaminants is not known. Foodborne illness is nevertheless recognized by both domestic and international scientists as a significant public health problem and there is wide agreement that pathogenic microorganisms are the major cause of food-related disease. The estimated annual (not discounted) cost of foodborne illness attributable to meat and poultry products from the four pathogens that are the focus of this regulation is from $1.1 to $4.1 billion. FSIS estimates that 90 percent of this annual cost, $0.99 to $3.69 billion, is attributable to contamination that occurs in establishments.

Makes Inspection More Effective

Currently, the FSIS inspectors in meat and poultry establishments that are not assigned to slaughter line positions perform selected inspection tasks that generate independent data about an establishment's production processes and environment. This activity produces ''snapshots'' of establishment operations at a particular moment. In contrast, process control generates records of establishment performance over time. These records and periodic verification inspections will enable FSIS inspectors to see how an establishment operates at all times, i.e., whether and where processing problems have occurred, and how problems were addressed.

The availability of more and better processing data will establish trends that set benchmarks from which deviations can be more quickly and accurately assessed. USDA inspectors will be trained to spot these deviations and take action when needed to ensure establishments bring a faulty process back into control. This type of Federal oversight is substantially more effective than a regulatory program that merely detects and condemns faulty end products. In the words of the National Advisory Committee on Microbiological Criteria for Foods, ''Controlling, monitoring, and verifying processing systems are more effective than relying upon end-product testing to assure a safe product.''

Increases Consumer Confidence

The number of foodborne illness outbreaks and incidents attributable to pathogens in meat or poultry raise questions about whether Federal inspection is as effective as it should be. Highly visible public controversies about meat and poultry inspection indicate an erosion of public confidence in the safety of meat and poultry products. There are growing demands that USDA improve its regulation of pathogens. The process control regulatory strategy described in this paper is USDA's response to those demands.

Many outbreaks of foodborne illness have been determined to be caused by mishandling of meat and poultry products after federally inspected processing. USDA believes that additional efforts to reduce pathogens during manufacturing will reduce these risks as well. This coupled with the improved retail regulatory controls from state adoption and enforcement of the Food Code should reduce this cause of illness. The Food Code is an FDA publication, a reference that provides guidance to retail outlets such as restaurants and grocery stores and institutions such as nursing homes on how to prepare food to prevent foodborne illness. State and local regulatory bodies use the FDA Food Code as a model to help develop or update their food safety rules and to be consistent with national food regulatory policy.

A significant portion of the meat and poultry industry do not take advantage of readily available methods to control their manufacturing processes. The Department has concluded that further regulation will bring industry standards up to what can practically be achieved in the manufacture of meat and poultry products through current scientific knowledge and available process control techniques. Raising the safety floor through regulations that mandate better process control will demonstrate to the public that USDA and industry are making a concerted effort to reduce the risk of foodborne illness from meat and poultry.

The economic benefits of increased consumer confidence can be conceptually realized as the amount consumers would be willing to pay for safer food. This ''willingness to pay'' reflects consumer desires to avoid foodborne illness and the expected medical and other costs associated with it. However, the data are not available to make quantitative estimates of this benefit.

Provides the Opportunity for Increased Productivity

Better process control is a sound and rational investment in the future of our

nation's meat and poultry industry. USDA's process control strategy will educate industry management about the need and methodology for development of a consistent, preventive, problem-solving approach to safety hazards, which can be expanded to other business objectives such as product quality and production efficiency. There is considerable evidence of how process control has improved worldwide industrial productivity in the past 40 years. This proposal will extend process control principles to parts of the meat and poultry industry that have not formerly used them.

Some important non-safety benefits that will accrue from industry use of better process control methods are:

- First, better production controls will result in more efficient processing operations overall with fewer product defects. Fewer defects mean less reworking, waste and give-away, resulting in increased yields and more profit opportunities.
- Second, better controls will significantly reduce the risk to processors that product with food safety defects will slip into commerce. Expensive and embarrassing product recalls can be, for the most part, avoided or greatly reduced with proper process controls.
- Third, better control of pathogens will impact all microorganisms, including those responsible for decomposition, resulting in quality improvement and longer shelf life for products.
- Fourth, better production controls improve establishment employee productivity which improves profit opportunities.

*D. Regulatory Alternatives for Process Control*

1. Mandatory HACCP

Considering the five effectiveness criteria of process control discussed above, the most effective means for generating the benefits reflected in these criteria is a mandatory HACCP regulatory program. This alternative clearly meets all five criteria described above. In fact, a mandatory HACCP program was judged to be the only option that will effect adequate processing improvements in all establishments throughout the industry. Only through mandatory HACCP can pathogen risks be minimized to the fullest extent possible; thereby significantly reducing foodborne illness, improving effectiveness of inspection, increasing consumer confidence, and ensuring a more viable industry. No other alternative accomplishes as much in these five areas as mandatory HACCP.

HACCP is a process control strategy that has been scientifically proven effective in food manufacturing establishments. HACCP is widely recognized by scientific authorities such as the National Academy of Sciences and international organizations such as the Codex Alimentarius. It is used today by a number of establishments in the food industry to produce consistently safe products. This approach has been supported for years by numerous groups that have studied USDA meat and poultry regulatory activities.

In 1983 FSIS asked the National Academy of Sciences (NAS) to evaluate the scientific basis of its inspection system and recommend a modernization agenda. The resulting report, ''Meat and Poultry Inspection, The Scientific Basis of the Nation's Program,'' National Academy Press, 1985 was the first comprehensive evaluation of a scientific basis for inspection. The 1985 NAS report provided a blueprint for change: it recommended that FSIS focus on pathogenic microorganisms and require that *all* official establishments operate under a HACCP system to control pathogens and other safety hazards.

After urging (NAS Recommendations, Page 4) the intensification of ''current efforts to control and eliminate contamination with micro-organisms that cause disease in humans,'' NAS encouraged (Page 135) USDA to ''move as vigorously as possible in the application of the HACCP concept to each and every step in establishment operations, in all types of enterprises involved in the production, processing, and storage of meat and poultry products.''

The General Accounting Office (GAO) has also identified needed improvements in USDA's present inspection system. In its reports and congressional testimony, and in numerous publications, GAO has endorsed HACCP as the most scientific system available to protect consumers from foodborne illness. This sentiment is most clearly expressed in a May 1994 report, ''Food Safety: Risk-Based Inspections and Microbial Monitoring Needed for Meat and Poultry,'' in which GAO recommended development of a mandatory HACCP program that includes microbial testing guidelines. GAO urged USDA to assist meat and poultry establishments in the development of their microbial testing programs by, among other things, disseminating information on the programs already in operation.

A third major proponent of HACCP is the National Advisory Committee on Microbiological Criteria for Foods (NACMCF), which was established in 1988 by the Secretary of Agriculture to advise and provide recommendations to the Secretaries of Agriculture and Health and Human Services on developing microbiological criteria to assess food safety and wholesomeness. Since 1989, NACMCF has prepared a series of reports on the development and implementation of HACCP. As one of its first tasks, the Committee developed ''HACCP Principles for Food Production'' in November 1989. In this report, the Committee endorsed HACCP as a rational approach to ensure food safety and set forth principles to standardize the technique. In 1992, the Committee issued an updated guide, ''Hazard Analysis and Critical Control Point System.''

In 1993 NACMCF defined the roles of regulatory agencies and industry in implementing HACCP. ''The Role of Regulatory Agencies and Industry in HACCP'' proposed responsibilities for FDA, USDA, and other agencies and industry during various phases of HACCP implementation. Similar suggestions for program change have been voiced by consumers, industry, state and local government representatives, as well as other constituent groups. For example, consumers at recent public hearings and the HACCP Round Table supported implementation of mandatory HACCP throughout the meat and poultry industry.

The meat and poultry industry has itself provided broad support for HACCP as a means to control pathogens, emphasizing that HACCP-based food production, distribution, and preparation can do more to protect public health than any Federal inspection program. They have recommended that HACCP be used to anticipate microbiological hazards in food systems and to identify risks in new and traditional products. State departments of health and agriculture have also endorsed the HACCP approach.

2. Alternatives to Mandatory HACCP

FSIS examined six other approaches before determining that mandatory HACCP was the most effective means for assuring process control in the meat and poultry industries.

1. Status quo
2. Intensify present inspection
3. Voluntary HACCP regulatory program
4. Mandatory HACCP regulation with exemption for small businesses
5. Mandatory HACCP regulation only for ready-to-eat products

6. Modified HACCP—recording deviations and responses only

These alternatives were assessed using the five effectiveness criteria presented in the previous section. The following six sections summarize the appraisal of each alternative.

Status Quo

This option would essentially continue establishment processing controls and Federal inspection as they are now. Good establishments with adequate methods for managing process lines would probably remain under control. The Agency, under its present authority, cannot shift resources out of good establishments so the situation of poor performing establishments is unlikely to change. This situation raises immediate questions about the first factor—controls production safety hazards—being met. Experience has proven that Federal inspection cannot substitute for management in establishments which have difficulty producing safe product consistently. Also, inspection cannot be as effective in the current establishment environment as in a process control establishment environment.

The status quo does not target industry and inspection resources on those hazards that lead to the greatest reduction in foodborne illness (factor two). In addition, food safety experts, consumers, and other observers have told USDA they are not satisfied with pathogen control by organoleptic methods as practiced in the present inspection program. Doing nothing new would perpetuate consumer doubts about the ability of Federal inspection to regulate pathogens which is counter to factor four. Consequently, the Department has concluded that business as usual is not an acceptable response to pathogens associated with meat and poultry products. Agency public health responsibilities alone require that more positive actions be taken.

Intensify Present Inspection

As one alternative to the proposed mandatory HACCP regulation, FSIS could intensify its present inspection system, i.e., focus new resources on suspected areas of risk in each establishment. This approach would assign to FSIS responsibility for designing, testing and mandating by specific regulation, process control systems for all meat and poultry products with potential safety hazards. A major flaw with this approach is that the burden of ensuring a safe product would be placed largely on FSIS instead of industry establishments where it belongs. Establishment management would have little motivation to become knowledgeable about process control or to implement process control systems.

The mandating of specific process controls has sometimes succeeded, as a regulatory strategy, for example, in correcting food safety problems in certain ready-to-eat products. However, these controls largely consisted of lethal heat treatments applied during final product processing. This approach is obviously inappropriate for product that is marketed raw which is most frequently associated with meat and poultry foodborne illness. The identification of processes that can be applied to raw product in every establishment would be much more difficult, if not impossible. Thus, intensified command-and-control regulation fails to meet the primary criterion for process control, i.e., control production safety hazards at all stages of meat and poultry slaughter and processing. Related to this failing, inspection would be ineffective without all establishments maintaining process control systems (factor three.) This option would not only require significant resource increases, it represents government taking on more, not less, responsibility for the production process, making it more difficult to focus on the highest risks of foodborne illness. With the burden of control and monitoring on USDA's inspection force rather than on establishment managers, industry performance in reducing foodborne illness would be unlikely to improve (factor two).

Voluntary HACCP Regulatory Program

A voluntary HACCP program would not provide reduction of pathogens uniformly across the processing spectrum because many in industry would choose not to participate. Therefore voluntary HACCP would not be sufficient to attain the necessary reduction in foodborne illness (factor two).

Voluntary HACCP would be implemented most frequently in establishments with good processing controls already, while establishments with unsophisticated controls would be less likely to participate. The explanation for this flaw is to be found in simple economics and, to a large degree, the attitudes of establishment management. Establishments with good processing controls now are most likely to adopt HACCP voluntarily because their management understands the linkage between how a product is handled during preparation and its finished quality and safety.

Conversely, establishments without good processing controls today are much less likely to participate in a voluntary HACCP program. These establishments are more often operated by management that lacks the knowledge or motivation to institute better processing controls. Nevertheless, it is precisely this group of low performing establishments that FSIS must reach to attain its public health goal. Nothing short of a mandatory HACCP regulatory program will be effective in bringing processing improvements to these marginal performers.

The Agency's regulation permitting the use of voluntary Total Quality Control (TQC) Systems provides a useful analogy to how effective a voluntary HACCP program would be. TQC focuses on establishment responsibility for meeting or exceeding the standards set by FSIS for all operations that are conducted in an establishment, including incoming raw materials, processing procedures, critical limits for product standards, and action limits for establishment quality control personnel. These systems operate under Agency oversight with an emphasis on timely and accurate recordkeeping and the necessity for appropriate action to be taken by an establishment when a limit set forth in an approved system is met or exceeded. However, over the last 10 years the number of establishments with active TQC Systems has declined from a high of around 500 (approximately 8% of all establishments) to the present 351 participating establishments (approximately 5% of all establishments). USDA experience has shown that a voluntary approach to HACCP would provide little assurance that a major portion of meat and poultry products had been produced under controls designed to minimize food safety hazards.0

Mandatory HACCP Regulation With Exemption for Small Businesses

Under this alternative, FSIS would mandate HACCP, but also provide an exemption for some category of small businesses as was done with nutrition labeling. While this final regulatory impact analysis does develop very specific definitions for small and very small establishments, the following discussion of comments uses the term ''small'' in a generic sense because many of the comments address small establishments or small businesses without defining these terms. There was a mix of public comments on whether or not HACCP should be mandatory for small businesses.

Comments supporting an exemption from HACCP for small establishments noted that many owner-operators of small establishments oversee the entire operation on a daily basis and can pay closer attention to procedures than can a large establishment. Similar comments pointed out that small establishments pose a minimal potential public health hazard because of the simplicity of their operations, the slow pace of operations, and the small number of potentially affected customers. Other comments pointed out that they sell their product to family, friends and neighbors and that type of market provides the greatest incentive for producing safe product.

Some commenters opposing an exemption did not want to create a two-tiered system. Others opposing an exemption for small establishments would require HACCP for everyone while easing the burden through flexibility of implementation. Several of the commenters opposing any type of exemption from HACCP identified themselves as owners of small establishments. One commenter noted that just because small businesses produce only 2 percent of the product does not mean they are responsible for only 2 percent of the foodborne illness attributable to meat and poultry.

The Agency used the evaluative factors presented above to consider the application of the rule to small establishments. Since major goals in implementing HACCP are to improve processing controls and establishment performance across *all* of industry (factor one) as a means to achieve foodborne illness reduction (factor two), the option to exempt establishments that perform the least process control is inherently flawed. USDA inspection experience shows that some of the small establishments which would be exempted under this option have particular difficulties maintaining control over their processing system.

While it is true that small establishments produce a minimal amount of the total meat and poultry supply, they do produce a full range of products, including those most frequently associated with foodborne illness from the meat and poultry supply.

This option also fails on factor three—provide more effective inspection. Two different inspection systems would be needed: one risk-based system to inspect HACCP establishments with good processing controls; the other to provide resource intensive coverage for establishments that largely do not. If the number of small establishments were to increase, more inspection resources would be required.

For these reasons, the final rule does not include an exemption for small businesses. However, the Agency has made significant changes to ease the burden on small business, including basing microbial sampling programs on production volume and deferring implementation of mandatory HACCP for small and very small businesses as defined in Section V.

Mandatory HACCP Regulation Only for Ready-to-Eat Products

This option would mandate HACCP only for establishments that prepare ready-to-eat meat and poultry products, but not for establishments that produce raw products. However, this decision would leave the public without adequate protection from pathogenic microorganisms clearly associated with product marketed in raw form. Very little reduction in the most frequent causes of foodborne illness (factor two) could be anticipated from this approach.

Government inspection costs would continue to increase to provide traditional resource-intensive inspection for slaughtering and allied processing establishments that would not be subject to mandatory HACCP. Since most of the unsolved problems with pathogenic microorganisms are associated with raw product and not with those products that would be the subject of this HACCP option, this is an especially inappropriate regulatory approach.

Modified HACCP—Recording Deviations and Responses Only

A final alternative considered would be to mandate HACCP, modified to eliminate the record keeping burden to the inspected industry, especially small establishments. Specifically, this option would modify the HACCP record-keeping principles so that instead of demanding continuous records at critical control points, companies would need to record only deviations from critical limits and the response to them. This would mean that HACCP-controlled operations would not generate continuous monitoring data to reflect the operation at critical control points, but would only record data when deviations occurred. This arrangement eliminates the continuous picture of establishment operations which is the underpinning of factor three—make inspection more effective.

Such an approach would substantially reduce the paperwork burdens associated with mandatory HACCP as recommended by NACMCF and recognized by CODEX. However, it would also seriously compromise the usefulness of HACCP as a means to make inspection more effective and avoid program cost increases. Regulatory officials need to have a system which can be reviewed in its entirety, so that a comprehensive picture of the process is available, not just the truncated version which grows out of recording deviations.

*E. Comments on Analysis of Regulatory Alternatives*

There were several general comments related to either the alternatives discussed in the proposed rule or the level of analysis conducted. There were comments noting that FSIS did not quantify the costs and benefits of the regulatory alternatives. Similar comments suggested that FSIS should have determined cost-benefit ratios for the processed food industry or for ready-to-eat products or for small businesses.

Generating quantitative benefit estimates for different types of products or different industry sectors would be very difficult. The estimates for foodborne illness attributable to meat and poultry have not been broken down by industry sector or type of product. There are no existing estimates for the portion of foodborne illness attributable to meat versus poultry or raw product versus cooked or partially cooked product.

Production volume can not be used as an indicator of potential benefits. Foodborne illness is not proportionally related to production volume because pathogen levels vary significantly by type of product. As noted above, a commenter also pointed out that just because small businesses account for only 2 percent of production does not mean that small businesses account for only 2 percent of foodborne illness.

On the cost side, the estimates are, for the most part, based on industry averages. In reality, costs will vary by industry sector based on the hazards presented and the existing presence of process control. Thus, in response to a comment that suggests that few benefits are available from changing the process for the manufacture of processed foods which are now produced under a zero pathogen standard, the Department would suggest that the costs for implementing HACCP for these products will also be low. Many ready-to-eat products such as cooked patties and roast beef are presently produced under comprehensive process control regulations.

One comment suggested that FSIS consider mandatory HACCP for only firms that produce raw meat and poultry products because that sector of the industry generates most of the problems

and would provide the greatest pathogen reduction benefits per dollar of cost expended. The same commenter found it odd that the Agency did include an alternative for mandatory HACCP for only ready-to-eat products after acknowledging that most of the unsolved problems with pathogenic microorganisms are associated with raw meat and poultry products, rather than ready-to-eat products. In the above discussion of regulatory alternatives, it was noted that mandatory HACCP for only ready-to-eat products is an especially inappropriate regulatory approach. In contrast, a raw product option appears attractive since most of the unsolved problems with pathogenic microorganisms are associated with raw product. Most establishments handle raw product ingredients or prepare a finished raw product. Most of the cost of this rule is associated with controlling the safety hazards of raw product production. Extending the rule to cover all production adds little cost while allowing a single inspection approach, avoiding confusion where raw product production ends and ready-to-eat production begins, and assuring that the potential hazard of recontaminating ready-to-eat product by contact with raw ingredients is always covered by comprehensive HACCP programs.

Other comments noted that FSIS did not analyze an option that accounted for the savings associated with streamlining and modernizing the inspection system or that FSIS should revise the cost-benefit analysis to consider the savings from eliminating the current inspection program. The savings referred to will be used to focus on food safety risks that need more coverage.

## III. Summary of Impacts

### *A. Introduction*

This section provides a summary of the costs and benefits that will be discussed in detail in Sections IV and V. The benefits analysis in Section IV and this summary discuss benefits in terms of the reduction in the cost of foodborne illness that results from reductions in pathogen levels. There are other public health benefits beyond the reduction of foodborne illness due to pathogenic bacteria. HACCP systems will also provide increased public protection from risks posed by chemical and physical hazards. There are also benefits beyond public health benefits. As discussed in Section I, the SOP and HACCP requirements have social benefits that derive from the capacity to reallocate inspection resources to other activities where the payoff in terms of reducing the risk of foodborne illness may be greater.

The February 1995 proposal and the subsequent public comment recognized that the HACCP/Pathogen Reduction regulations would also generate benefits for meat and poultry processors. For example, a commenter at a public hearing provided confirmation that the insurance industry is aware of HACCP and has offered reduced liability insurance for firms with improved food safety controls. Other comments noted that improved production efficiency has always been associated with improved process control. Increased customer confidence can also be a benefit to the extent that it has a positive influence on demand.

The benefits analysis in the preliminary RIA noted that benefits also accrue through the reduction of operating costs like the cost of product recalls or the cost of settling product liability claims. Other operating costs include the loss of establishment production due to suspensions for sanitation problems that could be reduced by improved process control, premiums for product liability insurance, loss of product reputation, and reduced demand when a foodborne illness outbreak is publicized identifying a product or company.

The cost analysis in Section V addresses two types of costs associated with this rule. There are the predictable costs associated with requirements directing all establishments or a specific category of establishments to take a well-defined action. Examples include the requirements to develop SOP's and HACCP plans or the requirement to have access to a HACCP-trained individual. This final RIA provides point estimates for all predictable costs. There are also potential costs that may impact some establishments because of current establishment-specific situations. This analysis provides a range of potential costs developed from two different scenarios of possible establishment responses to new pathogen standards.

This summary compares both types of costs with the potential public health benefits related to pathogen reduction, recognizing that there are other potential benefits. The discussion in Section V notes how this rule will set new requirements and also improve compliance with existing requirements. Some of the potential costs discussed in Section V are costs associated with improved compliance with existing standards and should not necessarily be considered costs of this rulemaking.

Public comments demonstrate that the controversy in this rulemaking derives not from the benefit cost ratio itself, which is very favorable, but from the fact that the processors will bear most of the costs while the public, in general, will experience the benefits. The public includes both the consumers of meat and poultry and those who do not consume meat or poultry but who bear the costs of illness in the society. Another area of controversy arises from the lack of proof that the estimated benefits will result from the promulgation of the rule. These doubts are particularly troublesome to those who would have to make resource investments under the rule while benefits largely accrue to others. This is, of course, the standard controversy facing government regulators. The essence of government regulation is that there is a situation where the public undergoes unacceptable risk because the current distribution of costs and benefits is unlikely to change without government intervention. This rule represents the Department's belief that the food safety risks being borne by the public are unacceptable, that they can be reduced through the use of readily available current technologies, and that the uncertainties involved in just how much risks can be reduced should not prevent the Department from making its best effort to reduce the risks.

### *B. Net Benefit Analysis*

Because costs and benefits accrue at different rates over different time periods, to compare costs and benefits it is necessary to examine present value estimates for both cost and benefit streams. To make these comparisons, both the preliminary analysis and this final RIA use a 20-year time period. The present values for costs and benefits are based on a discount rate of 7 percent, the current standard recommended by the Office of Management and Budget.

As discussed above, the cost analysis (Section V) addresses two types of costs. FSIS was able to develop point estimates for the direct costs of complying with the requirements outlined in the rule that all establishments must meet. These predictable costs include the costs of developing and operating HACCP plans and SOP's and the costs of required recordkeeping. There are also potential costs for establishments that may have to purchase new equipment, or modify their production practices to meet the pathogen reduction performance standards for *Salmonella*, or actually implement *Salmonella* testing programs to assure compliance with the new standards. The cost analysis develops a range of cost estimates for these potential costs.

The estimated annual industry costs (not discounted) are summarized in Table 2. These annual costs vary over the first four years as the new HACCP-based program is undergoing its implementation phase. After the initial four years, the recurring costs are estimated at a constant $99.6 to $119.8 million per year. The present value of all industry costs summarized in Table 2 for the 20-year time period is $968 to $1,156 million as shown earlier in Table 1. This total of $968 to $1,156 million ($0.97 to $1.16 billion) is the total industry cost for the rule as shown in Table 3.

TABLE 2.—SUMMARY OF ANNUAL INDUSTRY COSTS—ALL REQUIREMENTS

[$ Thousands]

| Cost Category | Year 1 | Year 2 | Year 3 | Year 4 | Year 5+ |
|---|---|---|---|---|---|
| I. Sanitation SOP's: | | | | | |
| Plans and Training | 2,992 | | | | |
| Observation and Recording | 8,345 | 16,691 | 16,691 | 16,691 | 16,691 |
| II. *E. coli* Sampling: | | | | | |
| Plans and Training | 2,627 | | | | |
| Collection and Analysis | 8,716 | 16,122 | 16,122 | 16,122 | 16,122 |
| Record Review | 406 | 752 | 752 | 752 | 752 |
| III. Compliance with *Salmonella* Standards | | 5,472–16,899 | 5,353–25,753 | 5,811–25,956 | 5,811–26,079 |
| Compliance with Generic *E. coli* Criteria | | (1) | (1) | (1) | (1) |
| IV. HACCP: | | | | | |
| Plan Development | | 3,769 | 27,755 | 35,464 | |
| Annual Plan Reassessment | | | 69 | 448 | 1,179 |
| Initial Training | | 1,270 | 8,284 | 18,435 | |
| Recurring Training | | 64 | 542 | 1,877 | 2,799 |
| Recordkeeping (Recording, Reviewing and Storing Data) | | 3,050 | 18,479 | 42,478 | 54,097 |
| V. Additional Overtime | | 189 | 837 | 1,711 | 2,125 |
| Total | 23,086 | 47,379–58,806 | 94,884–115,284 | 139,789–159,934 | 99,576–119,844 |

[1] Not Separately Estimated.

TABLE 3.— PRESENT VALUE OF 20-YEAR COSTS AND BENEFITS

[$ Billions]

| Effectiveness in reducing pathogens in the manufacturing sector (percent) | Public health benefits | | Industry costs |
|---|---|---|---|
| | Low | High | |
| 10 | 0.71 | 2.66 | 0.97–1.16 |
| 20 | 1.43 | 5.32 | 0.97–1.16 |
| 30 | 2.14 | 7.98 | 0.97–1.16 |
| 40 | 2.85 | 10.64 | 0.97–1.16 |
| 50 | 3.57 | 13.30 | 0.97–1.16 |
| 60 | 4.28 | 15.96 | 0.97–1.16 |
| 70 | 4.99 | 18.61 | 0.97–1.16 |
| 80 | 5.71 | 21.27 | 0.97–1.16 |
| 90 | 6.42 | 23.93 | 0.97–1.16 |
| 100 | 7.13 | 26.59 | 0.97–1.16 |

Note: Analysis assumes zero benefits until year 5. All elements of the HACCP-based program will be in place 42 months after publication of the final rule.

The public health benefits of this rule are discussed in detail in Section IV. The benefits are based on reducing the risk of foodborne illness due to *Campylobacter jejuni/coli, Escherichia coli* 0157:H7, *Listeria monocytogenes* and *Salmonella*. Section IV concludes that these four pathogens are the cause of 1.4 to 4.2 million cases of foodborne illness per year. FSIS has estimated that 90 percent of these cases are caused by contamination occurring at the manufacturing stage that can be addressed by improved process control. This addressable foodborne illness costs society from $0.99 to $3.69 billion, annually. The high and low range occurs because of the current uncertainty in the estimates of the number of cases of foodborne illness and death attributable to the four pathogens. Being without the knowledge to predict the effectiveness of the requirements in the rule to reduce foodborne illness, the Department has calculated projected health benefits for a range of effectiveness levels, where effectiveness refers to the percentage of pathogens eliminated at the manufacturing stage. The link between effectiveness and health benefits is the proportionate reduction assumption which is explained in Section IV. Because of the wide range in estimates for the cost of foodborne illness, each effectiveness level will have a low and high estimate for public health benefits. These estimates of public health benefits are shown in Table 2, as the present value of a 20-year benefit stream.

The analysis assumes that benefits will begin to accrue in year five. The five year lag leads to conservative benefit estimates since the new HACCP-based inspection program will be fully implemented in 42 months, and benefits should accrue during those 42 months as well as in the 1½ years that follow. Limiting the benefit estimates to four pathogens also leads to conservative cost estimates. To the extent that the proportionate reduction estimate may overestimate benefits, these other factors provide conservative balance.

Net benefits exist for every cost and benefit combination illustrated in Table 2 except for the case of 10 percent effectiveness using the low benefit estimate. If the low benefit estimate is correct, the new HACCP-based regulatory program would have to reduce pathogens by 14 to 17 percent to cover the projected 20-year industry costs of $968 to $1,156 million. For the high benefit estimate net benefits begin to occur at an effectiveness level of 4 to 5 percent.

The costs summarized in Tables 1 and 2 have not been reduced to account for firms that already have existing HACCP programs. FSIS does not have a good estimate of the number of such firms.

*C. Impact on ''Smaller'' Businesses*

The final rule provides regulatory flexibility for smaller firms consistent with the Regulatory Flexibility Act. For the slaughter facilities, the generic *E. coli* sampling requirements vary depending on the number of birds or animals slaughtered annually. This will significantly reduce the microbial

testing costs for smaller establishments which, under the proposed rule, would have been required to test every species or kind they slaughter every day on which slaughter of that species or kind occurs. Under the final rule, the impact on smaller establishments is mitigated by the change to base generic *E. coli* sampling requirements on annual production and by a change to no longer require that every species or kind be sampled. The costs to small establishments are also reduced because the proposed carcass cooling and antimicrobial near term requirements have been eliminated from the final rule and training requirements are more flexible. The requirement to sample each variety of raw ground product, which caused a heavier burden on small establishments, has also been eliminated.

The regulatory burden on small establishments is eased by the provisions which extend the time small establishments have to meet the HACCP system requirements. The detailed cost analysis in Section V outlines the methodology used in developing cost estimates and varying regulatory requirements for the purpose of regulatory flexibility for small establishments.

*D. Effect on Retail Price*

The preliminary analysis included an estimate that the total four-year implementation costs represented only $0.0024 per pound of fresh meat and poultry. This type of estimate helps put overall cost figures into perspective in terms of the potential increase in food prices. A large number of smaller processors responded very emotionally to the low figure of $0.0024 per pound on the basis that the lack of economies of scale in their businesses means their potential unit cost increases would be far higher. This ''cost-per-pound'' analysis was not meant to imply that the cost impact on all business would be the same. In a competitive industry, the impact on overall retail price is, however, an important indicator of net societal benefits. The four-year implementation costs for the final rule represent $0.0011 to $0.0013 per pound based on 1993 production of 67.15 billion pounds (66.4 billion pounds federally inspected and 748 million state inspected) of meat and poultry on a carcass weight basis. The annual recurring cost of $99.6 to $119.8 million represents $0.0015 to $0.0018 per pound based on 1993 production.

*E. Impact on International Trade*

The final rule will have an impact on countries and the establishments in those countries that export meat and poultry products to the United States. The inspection statutes require that imported product be produced under an inspection system that is equivalent to the U.S. inspection system. The equivalence of a country's system must be established by the United States before product can be exported to the United States. The notion of equivalence has been clarified under the World Trade Organization (WTO) Agreement on Sanitary and Phytosanitary measures. Under the WTO, all members have an obligation to apply the principle of equivalence on importing countries. Equivalence determinations are based on scientific evidence and risk assessment methodologies.

In light of the WTO emphasis on the use of science to determine equivalence, a number of countries are moving toward implementation of HACCP systems. The preliminary analysis noted that a large portion of the eligible exporting establishments are in countries that are themselves in the process of implementing HACCP and complying with their own country's HACCP requirements may achieve equivalence with the requirements of this rule.

As of January 1, 1995 there were 1,395 establishments in 36 different countries certified to export meat or poultry products to the United States. Canada (599 establishments), Denmark (125 establishments), Australia (111 establishments) and New Zealand (94 establishments) accounted for two-thirds of the 1,395 establishments. These four countries were the source of 85 percent of the 2.6 billion pounds of product imported during 1994. These four countries are currently developing HACCP systems for their respective inspection programs.

Half (18) of the 36 countries have fewer than 10 establishments approved to export products to the U.S. These 18 countries represent a total of 77 establishments, 5 percent of the total. Meeting the equivalency requirements may present a problem for some of these countries in the near term. Their inspection programs will have to meet equivalency requirements for HACCP according to the implementation schedule for domestic establishments, i.e., 18 months for large establishments, 30 months for small establishments and 42 months for very small establishments. This schedule should lessen the burden on smaller establishments.

There are other factors that will affect the burden on foreign establishments. As HACCP becomes the international norm, these establishments will be required to implement changes to meet the requirements of other countries implementing HACCP. Thus, their costs may not be solely associated with U.S. requirements. Establishing impact is further complicated because the U.S. requirements apply only when they are preparing product that is to be exported to the U.S. This product may represent only a small portion of total establishment production.

Upon implementation of these regulations, FSIS will review other countries' meat and poultry systems to ensure that exporting countries have adopted comparable measures, which would entitle them to continue exporting product to the United States. As other countries improve their regulations by adopting provisions comparable to those contained in this rule, it is expected that U.S. exports will similarly be affected, i.e., the receiving countries will be closely reviewing domestic exporting establishments to assure that they are meeting the requirements of the importing country.

FSIS will continue to carry out its import inspection responsibilities with a two-stage approach. The first stage is system review, which consists of an evaluation of the laws, policies, and administration of the inspection system in each eligible country. This overall evaluation will include an assessment of the implementation of HACCP supplemented by on-site reviews of individual establishments, laboratories, and other facilities within the foreign system. The ''equivalency'' of foreign requirements will be determined at this stage.

The second level of review involves port-of-entry inspection by FSIS inspectors to verify the effectiveness of foreign inspection systems. Using statistical sampling plans based on the foreign establishment's history and the nature of the product, FSIS will continue to give greater scrutiny to shipments posing the highest risk. Products that do not meet U.S. requirements, which includes having been produced under a HACCP or HACCP-equivalent system, will be refused entry. FSIS has concluded that requiring HACCP systems in combination with the two-stage inspection approach will better ensure the safety of imported meat and poultry products.

All countries exporting raw products to the U.S. must develop and implement performance standards that are equivalent to the pathogen reduction performance standards for *Salmonella.* They must also be able to demonstrate that they have systems in place to assure

compliance with the standards. As with any other type of standard, FSIS could choose to test imported product for *Salmonella* at port-of-entry to verify the effectiveness of the foreign inspection system.

With respect to the specific requirements for sampling generic *E. coli* to validate control of slaughter and sanitary dressing procedures, it will be necessary for all foreign countries to demonstrate that they have an equivalent procedure to verify that they are controlling their slaughter and sanitary dressing processes.

There were several comments related to trade issues. Most of the comments concerning the impact on exports dealt with the proposed requirement for antimicrobial treatment of U.S. product. That proposed requirement raised particular concerns because the European Union member states and Canada restrict the use of certain antimicrobials on meat and poultry carcasses. The concerns raised in the comments are no longer an issue because the final rule does not require the use of antimicrobials. The final rule will affect exports only if a company has difficulty meeting the microbial performance criteria without using an antimicrobial. One option discussed in the proposed rule was that hot water would be considered to be an acceptable antimicrobial treatment, and that would be acceptable to Canada and the members of the European Union. The public comments also indicated that Trisodium Phosphate (TSP) is approved for use in Canada and the United Kingdom and is being considered by the European Union, Australia, and New Zealand.

Comments related to imports were concerned about the procedures FSIS would use to determine equivalence with the new U.S. requirements. As a condition of the NAFTA Treaty and the GATT Treaty, the United States has agreed to allow imports from countries that have systems of inspection equivalent to that of the United States. FSIS is considering alternative methods for determining that a foreign country's system of inspection can assure that the establishments within that system are using a process control system equivalent to the HACCP-based inspection system outlined in the final rule.

*F. Impact on Agency Costs*

Implementation of this rule will lead to both one-time nonrecurring costs and recurring costs for FSIS. There are three categories of one-time nonrecurring costs: (1) Training, (2) in-establishment demonstration projects, and (3) laboratory renovation. In order to implement the rule, FSIS will provide training to in-establishment personnel in two segments. The first training segment will cover issues related to sanitation standard operating procedures and generic *E. coli* sampling and testing requirements. The estimated costs for this activity is $3.6 million in the first year of implementation. The second training segment will cover issues related to the implementation of HACCP and is estimated the cost $3.6 million spread over the second and third year of implementation. FSIS will utilize the train-the-trainer approach to minimize the costs of these initiatives. FSIS is also committed to working with States and industry to sponsor HACCP demonstration projects for small businesses. Pursuant to implementation of the HACCP rule, microbiological sampling and testing will increase dramatically. In the period from 1990 to 1995, FSIS averaged approximately 33,000 analyses for microbiology per year. This is estimated to increase to 125,000 analyses per year after HACCP implementation. In order to accommodate this increase, FSIS will renovate its field laboratory facilities to expand their capacity, improve ability to test for a broader range of pathogens, and purchase new equipment. FSIS estimates that the planned renovation will cost $1.5 million.

By implementing this rule, FSIS will incur recurring costs associated with increased microbiological testing and upgraded inspector salaries. FSIS estimates that microtesting costs will increase approximately $3.0 million annually. Of this amount $2.0 million is needed for equipment, supplies, and shipping costs to conduct *Salmonella* testing, $0.5 million for microtesting conducted to verify HACCP systems, and $0.5 million for personnel necessary to handle the increased workload. Under HACCP-based inspection, FSIS personnel will be required to assume greater responsbility for more complex food inspection tasks. Slaughter inspectors will be required to perform health and safety tasks, such as taking microbiological samples, and verifying HACCP systems. Processing inspectors' roles will take them out of the establishment and put them into retail and market place settings to take microbiological samples, and to ensure meat and poultry products are handled in a manner to that minimizes the growth of pathogenic organisms. FSIS estimates that compensating inspectors for assuming more complex food safety tasks will cost $1.6 million per year.

*G. Impact on State Programs*

Comments stated that FSIS failed to adequately consider the cost of the changes to State programs and that FSIS was increasing the resource demands for State programs without providing adequate funding. The preliminary analysis did not address the impact on State programs. However, FSIS recognizes that the 26 States operating their own meat and poultry inspection programs will likely have to substantially modify their programs after the HACCP/Pathogen Reduction regulation is finalized to remain ''at least equal to'' Federal inspection programs as required by the FMIA and PPIA. During the regulation's implementation period, FSIS will be using the Agency's State-Federal Program staff to assist the States in bringing the necessary changes to the State inspection programs. Although FSIS has requested some additional funds to implement this rule, FSIS has also acknowledged that implementation of this rule will require eliminating some tasks, conducting other tasks differently and streamlining the organization in order to free up resources to fully address the new requirements. FSIS believes that the same type of restructuring or reprogramming will take place within the State programs. This does guarantee, however, that all States with inspection programs will be able to implement the necessary program changes without additional funds. FSIS believes, however, that with FSIS assistance and with the flexibility provided under the ''equal to'' provisions, most of the States should be able to modify their programs with minimal additional funding. To the extent that there are any additional costs, the State inspection programs are eligible to receive up to 50 percent Federal matching funds.

*H. Consumer Welfare Analysis*

It is likely that at least some of the costs of the new HACCP-based regulatory program will be passed on to consumers in the form of higher prices. Even if costs are fully reflected in retail prices, the impact on consumers and consumption will be small. Retail costs are not expected to increase more than 0.02 percent. Retail demand for meat and poultry is inelastic. A likely range is $-0.25$ to $-0.75$. This suggests changes in quantity demanded of less than 0.02 percent. Given that annual per capita meat and poultry consumption is about 211 pounds, retail weight, the impact on individual consumption will be less than 1/10th of a pound per year. In aggregate, with a high impact

scenario, consumption would decrease by about 50 million pounds. These impacts may be overstated if meat and poultry producers pass some costs back to livestock and poultry producers. Improved consumer confidence in the safety of meat and poultry could offset price driven decreases in consumption.

## IV. Analysis of Public Health Benefits

### *A. Introduction*

This section addresses the methodology used to develop the estimates for public health benefits that, for the purpose of this final Regulatory Impact Assessment, have been defined as the reduction in the cost of foodborne illness attributable to pathogens that contaminate meat and poultry products at the manufacturing stage. This section is organized around the Agency's responses to the public comments related to benefits. The first part of this section addresses the general comments related to risk assessment. The Agency has responded to these general requirements by providing an overall summary of the current state-of-the-art with respect to risk assessment for foodborne pathogens. The second part of the discussion (see subsection titled ''Analysis of Comments on Public Health Benefits'') addresses the more specific comments on the methodology used to estimate benefits in the preliminary analysis.

Several comments suggested that FSIS has not conducted an adequate risk assessment and/or should conduct a thorough risk assessment before proceeding with the current rulemaking. More focused comments assert that the relationship between pathogen reduction at the manufacturing stage and foodborne illness reduction is unknown. Those comments suggest that establishing that relationship requires a quantitative risk assessment, i.e., an estimate of the probability of adverse health effects (foodborne illness) given a particular level of a hazard (pathogens at manufacturing stage).

The preliminary analysis and this final RIA recognize that the relationship is unknown and acknowledge that there are significant data gaps regarding both likelihood and magnitude of illness and numbers of foodborne pathogens. These data gaps mean that multiple assumptions must be made in order to calculate the probabilities of risk, and FSIS is concerned with this tremendous uncertainty. However, the agency is developing quantitative assessments and believes that these will become the basis on which to make future regulatory decisions. In this rulemaking, FSIS estimates of the risk of foodborne disease linked to specific pathogens are based upon the best judgement of nationally recognized experts in infectious disease, epidemiology, microbiology, and veterinary medicine. FSIS is also relying on a qualitative estimation of risk as expressed in publications and summary reports from the CDC, other public health agencies, and special panels, such as the National Advisory Committee on Microbiological Criteria in Foods and those established by the NAS. Based on this sizable body of information and scientific judgement, FSIS is proceeding to develop benefit estimates using the assumption that a reduction in pathogens leads to a proportionate reduction in illness and death. The benefits analysis could have used a more conservative relationship estimate, e.g., a reduction in pathogens leads to a reduction in illness that is less than proportional. However, given the current level of knowledge, FSIS views the proportional assumption as most appropriate at present.

The Department has initiatives in place that will begin to relate pathogen levels at inspected establishments to incidence of human illness and support quantitative risk assessment (see Section IV–D on FSIS Data Initiatives). The present paucity of data to support a risk model for the major foodborne pathogens causing human disease limits the usefulness of quantitative risk assessment in the regulatory arena of meat and poultry inspection. It is unlikely that any single numerical constant will adequately describe the dose-response relationships for all pathogens associated with all of the products that FSIS regulates, given the complexity of possible interactions of factors associated with the host, the pathogenic strain, the diet, and the environment (CAST, 1994).

The Federal Crop Insurance Reform and Department of Agriculture Reorganization Act of 1994 (P.L. 103–354) now requires that for each proposed major regulation (i.e. economic effects of at least $100 million a year and effects on human health, safety, or the environment) the Department publish an analysis of the risks addressed by the regulation. While this statute does not apply to this final rule, FSIS is providing a qualitative estimation of risk (Tables 4 and 5) and a recommendation to manage risk using HACCP in meat and poultry inspection programs. Concurrently, scientists from FSIS and USDA's Agricultural Research Service (ARS), Economic Research Service (ERS), and modelers from academia and industry continue to develop risk models which blend failure analysis, predictive microbiology, and other models into the framework described by the NAS (NRC, 1983). FSIS believes this approach is flexible and responsive to new data necessary to fully document risks of foodborne diseases.

### *B. FSIS Risk Assessment*

Following the publication of the 1985 National Academy of Sciences (NAS) study on the scientific basis for meat and poultry inspection, FSIS requested that the National Research Council of NAS conduct a follow-up study that included the objective of developing a risk assessment model for the poultry production system. The subsequent report, ''Poultry Inspection: The Basis for a Risk-Assessment Approach'' was published by the National Academy Press in 1987. The 1987 study concluded that the present system of inspection provides little opportunity to detect or control the most significant health risks presented by microbial agents that are pathogenic to humans. The study also concluded that current databases can serve as the basis for a comprehensive, quantitative risk assessment only for certain well-characterized chemical residues.

The committee conducting the study also concluded that their report did constitute a qualitative risk assessment that could be useful for many purposes, including the evaluation of inspection strategies. That assessment found: ''There is evidence linking disease in humans to the presence of pathogens on chickens. For example, epidemiological studies indicate that approximately 48% of *Campylobacter* infections are attributable to chicken. Data also suggest that chicken is probably an important source of salmonellosis in the United States.'' Based on these and other findings, the committee recommended that FSIS ''modify the existing system so that it more directly addresses public health concerns.'' FSIS believes that the implementation of HACCP programs at slaughter for meat and poultry is such a ''modification'' of the food safety system which will address human health hazards, particularly foodborne diseases.

### *C. Risk Assessment Framework*

The National Research Council (1983) presented a framework for risk assessment that has become a standard paradigm to organize risk assessments for chemical and microbial hazards. The framework, consisting of hazard identification, dose-response assessment, exposure assessment, and risk characterization, is flexible and can accommodate many different modeling strategies. The major distinction

between foodborne microbial risk assessments and chemical risk assessments may be the additional uncertainties of microbial growth and survival in food prior to consumption. Survival of pathogens present in a raw food and after cooking can be modeled using predictive microbiology methods. These models can also address the growth of pathogens with time and temperature abuse of raw and cooked foods.

One of the first U.S. publications on the application of predictive microbiology to microbial risk assessment (Buchanan & Whiting, 1996) included estimations of risk of salmonellosis for several ''what-if scenarios'' as examples of potential time and temperature abuses of partially cooked food. The predictive microbiology model was linked to a published dose-response model for salmonellosis (Haas, 1983) to calculate a risk estimate. The dose-response model was developed by empirically fitting data from human feeding studies conducted at high-dose challenges with a number of pathogenic strains of *Salmonella* to the ''beta poisson'' model (Haas, 1983). The authors generated risk estimates for selected cooking and abuse scenarios, but recognized that the risk of illness is zero when the pathogen is not present in the sample even with unsafe food handling. HACCP programs at slaughter are expected to affect pathogen presence and levels before potential time and temperature abuses can occur. Therefore, changes at slaughter, in the duration of cooking, and final storage conditions of the food exert a tremendous impact upon the model outcomes.

An unpublished draft risk model is in development as a research endeavor by Agriculture and Agri-Food Canada and Health Canada. A variety of modeling approaches were organized within the 1983 NRC framework to estimate risk of human illness from *E. coli* 0157:H7 in ground beef. The draft risk model includes many stochastic variables to account for the variability and uncertainty associated with the inputs and assumptions of the model. The authors are developing the model to identify current limitations to the construction of quantitative models which accurately describe the risk of foodborne disease along the farm to fork continuum.

These recent quantitative risk assessment efforts are an encouraging beginning and serve to illustrate the tremendous uncertainties created by insufficient data describing processes throughout the farm to table continuum that contribute to risk. Additional uncertainties surround assumptions based on epidemiologic data for human illness. For example, recent data in the U.S. indicates a growing number of outbreaks of *E. coli* 0157:H7 disease linked to sources other than ground beef. The ecology of the organism on the farm, in the bovine gastrointestinal tract, and in irrigation, recreational, and drinking waters is largely unknown. Additionally, the primary sources of *E. coli* 0157:H7 causing sporadic disease may remain undercooked hamburger and may differ from vehicles causing outbreaks, as has been documented for *Campylobacter* (CDC, 1988). Outbreaks of campylobacteriosis have been caused primarily by unpasteurized milk and contaminated water, yet the overwhelming majority of infections are sporadic and have been linked to undercooked chicken. Control strategies to reduce both outbreak and sporadic case numbers for both of these pathogens may require greater understanding of vehicles of disease and more information than is currently available.

FSIS concludes that risk models for foodborne illnesses are necessarily based largely on assumptions because scientific data describing key foodborne disease processes have not been developed. The models are extremely useful to identify basic research needs that might reduce the uncertainty associated with the inputs and assumptions of the models. The agency is proposing initiatives to generate data which may reduce uncertainties associated with modeling the risk of foodborne diseases. However, application of microbial risk assessment models to regulatory decision-making appears premature at this time. The following is a summary of the availability and limitations of data supporting risk assessment for foodborne pathogens:

1. Hazard Identification

The Agency selected from the pathogens listed in Tables 4 and 5 the three most common enteric pathogens of animal origin: *Campylobacter jejuni/coli, E. coli* 0157:H7, *Salmonella* and one environmental pathogen *Listeria* monocytogenes for consideration in risk assessment. FSIS believes that these four pathogens may contaminate meat and poultry food vehicles at slaughter and can be reduced through improved process control in the manufacturing sector. Available data on estimated human disease incidence are summarized in Table 4. Data on human disease attributable to proven as well as epidemiologically linked pathogens and food vehicles are presented in Table 5. Additional and more precise information for this section regarding estimated national disease incidence and disease severity and duration is expected on these pathogens from the sentinel site surveillance initiative.

2. Exposure Assessment

Rarely can actual exposure to a specific strain of foodborne pathogen be quantified with certainty in foodborne disease outbreaks. Microbes in food are known to be non-homogeneously distributed, imposing additional uncertainty due to sampling error upon the analytical variability of the methods for detection and quantification of microbes in foods. The outbreak strain may or may not be detected in the feces of diarrheal cases or in leftovers or companion samples from suspected lots. The levels detected in leftovers or companion samples from the same lot of food may or may not be representative of the serving that was prepared and consumed since the microbial numbers vary with time and temperature conditions and the initial microbial populations. The amount of the serving consumed may not be known.

The FSIS baseline studies provide data on occurrence of pathogens (likelihood) and levels (magnitude) in uncooked meat and poultry products at slaughter and raw ground processing. Data for likelihood and magnitude of pathogens in the distribution, preparation, and consumption phases of the farm-to-fork continuum of food production are sparse. Predictive microbiology models may be the most cost-effective method to deduce possible exposure scenarios in meat and poultry beyond the slaughter phase that may result in foodborne illness. The likelihood that the selected scenarios of improper cooking and abuse actually occur among U.S. consumers may not be measurable, but the scenarios may be useful in modification of behaviors that pose increased risk to consumers.

3. Dose-Response Assessment

The relationship between the dose of a pathogen and response in the host, when known, can vary greatly for foodborne pathogens. Human feeding studies with foodborne pathogens were largely conducted several decades ago with small numbers of healthy adult males. One study reported both ill and asymptomatic volunteers who had consumed up to 1,000,000,000 pathogenic *Salmonella.* Outbreak data for other *Salmonella* serotypes in food vehicles suggest a range of infective doses from one cell to 1,000,000,000,000 cells (Blaser & Newman, 1982). Fatty food vehicles, including some meat and

poultry products, are thought to protect enteropathogens from stomach acids and digestive enzymes that might otherwise reduce the dose to the intestinal tract and reduce the likelihood of disease. The effects of competition of the pathogen with the large indigenous microbial populations in food (ICMSF, 1980) and in the human gastrointestinal tract (Rolfe, 1991) may reduce the likelihood and/or the severity of foodborne disease.

Even carefully controlled volunteer feeding experiments at doses up to one billion organisms per volunteer have shown variability in the infectious dose of one pathogen for individuals within a group of seemingly healthy, young adults. Extrapolation of empirical models of effects at high doses to low doses typical of properly handled food may or may not be appropriate. The dose-response curve for healthy adult males may not be useful in estimating dose-response relationships for the general population or sensitive sub-populations. The data available from human feeding studies were generated from very few species and strains of bacterial pathogens, excluding *E. coli* 0157:H7. Dose-response modeling is crucial to microbial and chemical risk assessments. FSIS believes that application of dose-response models in food safety regulation requires careful examination of the validity of the assumptions and inputs of the model and of the plausibility of the model as a descriptor of foodborne disease processes.

4. Risk Characterization

The integration of exposure and dose-response models is expected in risk characterization, along with sensitivity and uncertainty analyses (Burmaster & Anderson, 1995) for the risk model. Perhaps of greater significance than the numerical estimate of risk is the uncertainty associated with the estimate. A fully developed risk characterization would include risk estimates and sensitivity/uncertainty analyses for alternative models and assumptions. FSIS is collaborating with scientists in academia, the Agricultural Research Service, the Animal & Plant Health Inspection Service, the Economic Research Service, and the Office of Risk Assessment and Cost Benefit Analysis to develop and validate a risk assessment model for a single pathogen in a single meat product. This model may be modified for other specific pathogens of concern. The expectation of a generic model for all foodborne disease agents in all products does not appear promising based on differences in pathogenesis of bacterial species and strains and in human sensitivity and pathology.

FSIS continues to evaluate new information on foodborne pathogens and on risk assessment methods and tools in accordance with the FSIS public health mission. The NAS Report, the CAST Report and the 1995 Conference recognize HACCP as a system to reduce the likelihood of foodborne illness. The CAST Task Force also concluded that ''the efficacy of a HACCP system depends on the rigor and consistency with which it is designed and implemented and the use of (a) critical control point(s) that will control pathogens.''

*D. FSIS Data Initiatives*

The 1994 report, ''Foodborne Pathogens: Risks and Consequences, CAST Task Force Report No. 122, September 1994'' concluded that ''a comprehensive system of assessing the risks of human illness from microbial pathogens in the food supply has yet to be devised.'' They cited the limitations of the current food safety information database and the difficulty in accumulating dose response and minimum infective dose data. A recent multidisciplinary conference, ''Tracking Foodborne Pathogens from Farm-to-Table, Data Needs to Evaluate Control Options'', carefully reviewed current databases and confirmed limitations outlined in the CAST Task Force report.

FSIS has established initiatives to improve the quality and quantity of data in two major areas. First, FSIS is working with the Food and Drug Administration (FDA) and the Centers for Disease Control and Prevention (CDC) to establish an active sentinel site surveillance system for the major causes of foodborne illness. This project is designed to accumulate data on the incidence of foodborne illness by pathogen and by food.

Second, the Agency has been developing baseline data for pathogen levels on major food animal species at the time of slaughter. The baseline data will allow the Agency to detect changes in the overall nation-wide pathogen levels. The National Baseline program was initiated in 1992 to provide information on the type and level of microbiological contamination on raw products under Federal inspection. Each sample collected is analyzed for nine microorganisms or groups of organisms. Microbiological baseline data are now available for steers and heifers, cows and bulls, and broiler chickens.

If sufficient data on both pathogen levels and foodborne disease epidemiology result from current and future initiatives, FSIS should be able to develop models showing how these two variables are related for different pathogens. These models should then permit/facilitate a quantitative estimate of risk. Such data are essential for FSIS to evaluate the effect of control measures on both pathogens levels and on foodborne illness.

*E. ARS Food Safety Research Program*

The Agricultural Research Service (ARS) administers a food safety research program that is currently funded at approximately $45 million per year. This program addresses problems in four different areas; pathogen reduction, mycotoxins, residues, and natural toxins. The reduction of microbial pathogens in food products of animal origin is the most pressing food safety problem today. Consequently, the pathogen reduction component is the largest of the four areas and is currently funded at $18.2 million annually. The ARS research in pathogen reduction addresses both preharvest and animal production, and post harvest problem areas, with approximately equal funding for each.

Ongoing ARS research will help FSIS improve its capability for performing quantitative risk assessment in the area of foodborne pathogens or improve the ability to predict the effectiveness of new pathogen reduction technologies. Ongoing projects include the modeling of bacterial growth or thermal death times which will help set standards for meat and poultry products. Ongoing projects will also provide new laboratory screening or confirmatory methods. Other projects provide and/or evaluate technology and management methods which can help producers achieve lower contamination levels in animals presented for slaughter, such as vaccines or competitive bacterial cultures to prevent pathogens in live animals. There are also technology and management methods for use in slaughter and processing establishments, such as, organic acids for use in carcass sanitation, improvements to the feather picking operation for poultry, washing of trailers to reduce microbiological contamination, and establishment of guidelines on the microbiological safety of recycling cooling solutions for ready-to-cook meat and poultry products. In many cases the research may provide the scientific basis for developing and improving technology, for example, the nature of bacterial attachment to various meat surfaces.

FSIS can and does forward very specific research requests to ARS. In preparation for this final rule, FSIS requested that ARS compare the results

from different microbial sample collection techniques, sponging versus excision at one versus three carcass sites. These studies are currently being conducted on both cow/bull and market hog carcasses. There are other specific ARS projects that will help provide the scientific basis for HACCP through risk assessment, predictive microbiology, and pathogen reduction interventions for several different bacterial pathogens which must be controlled to assure the safety of meat and poultry.

These projects include: (1) Development of models to predict the growth rates, survival times, and thermal death rates for microbial pathogens potentially present in foods, including meat and meat products. (Microbiological modeling is time consuming and expensive because it requires that the data be quantified, that is, that numbers of bacteria are obtained, rather just the knowledge of the presence or absence of a pathogen under the conditions of the test.) The microorganisms being studied include *E. coli* O157:H7, *Listeria monocytogenes,* and *Salmonella.* These models are written into personal computer software that gives FSIS a readily useable tool to help evaluate proposed meat processes and assess out-of-process events. Refining predictive models has the goal of linking an entire process from raw ingredients to distribution of finished product. A specific project is to model the survival of *E. coli* O157:H7 during the manufacture of uncooked, fermented meat products. Using the information obtained, ARS will closely collaborate with other USDA agencies to develop strategies for risk reduction using the various processing techniques, and to create risk assessment models.

(2) Modeling studies to predict the thermal inactivation of spore-forming and non-spore-forming bacterial pathogens of both cooked and ready-to-eat products. These studies will be extended to the cooling of these products to ensure that there is no potential for growth of *Clostridium botulinum* and *C. perfringens.*

(3) Determination of the long-term effects (21 days of storage at refrigerated temperatures) of organic acid treatment of red meat on some key pathogens (*E. coli* O157:H7, *Listeria,* and *Clostridium*), as well as on spoilage bacteria (mesophilic aerobes, lactic acid bacteria, and pseudomonads).

(4) Delineation of the parameters affecting the antibacterial activity of organic acids. These include tissue type (pre-rigor, post-rigor, frozen post rigor), inoculum type (pure culture or inoculated feces), inoculum level and the temperature of spray wash at meat surface. These results should clarify inconsistent reports on antibacterial activity of organic acids and also define optimum conditions to maximize the antibacterial activity of organic acids.

(5) The correlation of the *Campylobacter* levels in broilers from the chill tank with their *Campylobacter* levels during production.

*F. Analysis of Comments on Public Health Benefits*

There were many comments on the methodology used to estimate public health benefits in the preliminary analysis. This methodology used a series of estimates or assumptions based on incomplete data related to the six following areas:

- Incidence of foodborne illness
- Cost of foodborne illness
- Percentage of foodborne illness and cost of foodborne illness attributable to meat and poultry products
- Pathogens addressed by the rule
- Effectiveness of rule in reducing pathogens
- Estimated reduction in cost of foodborne illness related to reduction of pathogens

To facilitate discussion of the issues raised in comments, the issues are addressed organized by these six areas.

1. Incidence of Foodborne Illness

Table 4 presents the most recent estimates on the incidence of illness and death for selected pathogens along with the latest estimates on the percentage of illness and death which is foodborne. As discussed in the preliminary RIA, Table 4 includes the ''best estimates'' when precise data are not available. Many of these estimates are based on the landmark CDC study by Bennett, Holmberg, Rogers, and Solomon, published in 1987, which used CDC surveillance and outbreak data, published reports, and expert opinion to estimate the overall incidence and case-fatality ratio for all infectious and parasitic diseases. Estimates on the foodborne percentage of illness and death for bacteria in Table 4 are all based on CDC data. The resulting estimates for the number of foodborne cases and deaths are presented in the second and third columns of Table 5.

The benefits for the preliminary analysis and this final RIA are calculated for the three most common enteric pathogens of animal origin: *Campylobacter jejuni/coli, E. coli* O157:H7, *Salmonella* and one environmental pathogen *Listeria monocytogenes.* FSIS believes that these four pathogens can be reduced through improved process control in the manufacturing sector.

Although *Clostridium perfringens* and *Staphylococcus aureus* also cause a significant number of foodborne illnesses, they are not included in the benefits analysis because it is not clear that the HACCP-based regulatory program, which focuses on federally inspected processing, will significantly affect the incidence of disease caused by these organisms. *Staphylococcus aureus* usually enters the food chain through food handlers in restaurants and other commercial kitchens. Although *C. perfringens* may enter the food chain through the slaughter process, it is so ubiquitous in the environment that FSIS will not assume that controls at slaughter will be effective against this pathogen.

One commenter questioned why the Agency has not addressed the public health problem of toxoplasmosis given the Table 5 estimate of $2.7 billion in annual costs. FSIS believes that while process control may help decrease the spread of cysts during boning and cutting operations, most of the *Toxoplasma gondi* cysts are internal to infective muscle tissues and are not addressable by process control. Therefore, FSIS is making the more conservative assumption to exclude this pathogen in the benefits estimate of disease averted.

Many comments suggested that the large range in the illness incidence estimates demonstrates that there are insufficient data on which to base a new regulatory program. Historically, the lack of quantitative data on benefits and specific health risks have meant that health and safety regulations have required decisionmaking under uncertainty and have required the decisionmaker to balance the need to act with the need for additional or improved data. Compared to such issues as whether a chemical is a potential human carcinogen or whether low levels of air pollutants cause adverse health effects, the health effects of enteric pathogens are relatively well documented. If the pathogens enter the food supply, they do, under certain conditions, cause foodborne illness. If their presence can be prevented, no amount of temperature abuse, mishandling or undercooking can lead to foodborne illness.

The Agency believes that the existing estimates on foodborne illness are adequate to conclude that a substantial and intolerable public health problem exists. Furthermore, existing estimates are appropriate for developing estimates on the cost of foodborne illness attributable to meat and poultry. The

Agency notes that similar estimates on the incidence of foodborne illness have been published by scientists from ERS in peer-reviewed journal articles (see footnotes to Table 5) and by the 1994 CAST Task Force.

The above statement that Table 4 includes the most recent estimates of the incidence of illness and death requires further explanation in the case of *Listeria monocytogenes*. The estimates of 1,795–1,860 cases of listeriosis and 445–510 deaths are the ones used in the latest cost of illness study conducted by ERS. ERS is in the process of publishing a comprehensive documentation for the estimates of cost of illness for 1993. In their draft document they acknowledge that the estimate for listeriosis cases originates from an extrapolation to the U.S. population of incidence data from a CDC-conducted surveillance study of six geographic regions in 1986 and 1987 (Gellin *et al.* 1987). They also note that (Tappero *et al.* 1995) found that the incidence of listeriosis has decreased since the 1960's and that projections from the surveillance data suggest that there were 1,092 listeriosis cases and 248 deaths in 1993. ERS did not modify their cost of illness estimates because Tappero *et al.*, was published after their analysis was concluded.

FSIS considered modifying the cost of illness estimates for this final analysis but decided to use the estimates in Tables 4 and 5 because (1) They are the figures that will appear in the upcoming ERS publication and, (2) updating the listeriosis estimates would have minimal impact on the overall cost of illness estimates. Considering the overall range and uncertainties involved in the cost of illness estimates, the change in listeriosis estimates has negligible impact on the regulatory analysis information conveyed through the potential benefits estimate.

The Agency also recognizes that in using the 1993 estimates for incidence of foodborne illness, the benefits analysis has not accounted for possible reductions in foodborne illness attributable to the rule that mandated safe handling statements on labeling of raw meat and poultry products. The rule mandating safe handling instructions became effective on May 27, 1994. Thus, it can be argued that the incidence of foodborne illness for 1994 through the present should reflect the effectiveness of the 1994 labeling requirement in reducing the incidence of illness.

FSIS is not aware of any quantitative evaluation of the effectiveness of safe handling labeling. Two recent surveys indicate a high level of awareness, but these surveys do not contain findings that can be translated into changes in consumer behavior. A recent Associated Press poll found that 9 in 10 Americans say they follow the safe-handling instructions. This poll, conducted in April 1996, included 1,019 randomly selected adults. This was a telephone survey conducted by ICR Survey Research Group. A November 1995 survey conducted by Wegman Food Markets in Buffalo, Rochester, and Syracuse found that 67.9 percent of respondents indicated they had read the safe handling information. The Wegman's survey found that most household meat preparers rely on color of meat or clarity of juices rather than temperature to determine when meat has been cooked thoroughly.

In this analysis, FSIS has not attempted to adjust the 1993 baseline to account for safe handling labeling. The potential effect of the 1994 regulation is one of many factors that could be affecting the current incidence or cost of illness. A May 1996 GAO study on foodborne illness notes that food safety and public health officials believe that the risk of foodborne illness is increasing. If they are correct, the 1994 labeling rule may be slowing the growth rather than reducing the absolute level.

There are many other factors that could have been incorporated into the baseline for the analysis such as population growth and increases in the cost of medical care. FSIS believes that attempts to adjust the cost of illness baseline to account for factors such as inflation, possible increases in foodborne illness due to behavior change or population increases, and possible decreases due to inventions such as safe handling labels are more likely to be misleading than informative given the level of uncertainly and wide range in existing estimates.

2. Cost of Foodborne Illness

The fourth column of Table 5 shows that the 1993 estimated cost of foodborne illness by pathogen or parasite was between $5.6 and $9.4 billion. These cost of illness estimates have been developed by ERS in conjunction with CDC over the past 15 years. As indicated in footnotes to Table 5, the results of that work have been frequently published in peer-reviewed journals.

There were only a few public comments on the proposed rule which addressed the methodology used for estimating the cost of foodborne illness. Some comments argued that the public health benefit estimates are low because of the low value-of-life factor used in the estimates for the cost of foodborne illness.

ERS intentionally used a conservative method to estimate the value of a statistical life (VOSL) acknowledging the controversy over valuing lives. ERS used Landefeld and Seskin's VOSL estimates and recognizes that the cost of illness estimates would be substantially higher if they used alternative methods. For example, Viscusi (1993) summarized the results of 24 principal labor market studies and found that the majority of the VOSL estimates lie between $3 million and $7 million per life. A survey of the wage-risk premium literature on the willingness to pay to prevent death concluded that reasonably consistent estimates of the value of a statistical life range from $1.6 million to $6.5 million dollars (1986 dollars) (Fisher et al. 1989). Updated to 1993 dollars using the change in average weekly earnings, Viscusi's range becomes $3.2 million to $7.6 million per VOSL and Fisher's range becomes $2.0 million to $10.4 million dollars for each statistical-life lost. Viscusi and the Fisher estimates are greater than the highest Landefeld-Seskin (LS) VOSL estimate of $1,584,605 in 1993 dollars (estimate for a 22 year old).

TABLE 4.—SOURCES OF DATA FOR SELECTED PATHOGENS, 1993

| Pathogen | Estimated number of cases | Estimated number of deaths | Source(s) for case and death estimates | Percent foodborne | Source |
|---|---|---|---|---|---|
| Bacteria: | | | | | |
| Campylobacter jejuni or coli | 2,500,000 | 200–730 | Tauxe | 55–70 | Tauxe et al. |
| Clostridium perfringens | 10,000 | 100 | Bennett et al. | 100 | Bennett et al. |
| Escherichia coli O157:H7 | 10,000–20,000 | 200–500 | AGA Conference | 80 | AGA Conf./CDC. |
| Listeria monocytogenes | 1,795–1,860 | 445–510 | Roberts and Pinner | 85–95 | Schuchat. |

TABLE 4.—SOURCES OF DATA FOR SELECTED PATHOGENS, 1993—Continued

| Pathogen | Estimated number of cases | Estimated number of deaths | Source(s) for case and death estimates | Percent foodborne | Source |
|---|---|---|---|---|---|
| Salmonella | 800,000–4,000,000 | 800–4,000 | Helmick et al./Bennett et al. | 87–96 | Bennett et al./Tauxe & Blake. |
| Staphylococcus aureus | 8,900,000 | 7,120 | Bennett et al | 17 | Bennett et al |
| Parasite: | | | | | |
| Toxoplasma gondii | 4,111 | 82 | Roberts et al. | 50 | Roberts et al. |

Sources: American Gastroenterological Association Consensus Conference on E. coli O157:H7, Washington, DC, July 11–13, 1994. Bennett, J.V., S.D. Holmberg, M.F. Rogers, and S.L. Solomon. 1987. ''Infectious and Parasitic Diseases,'' In R.W. Amler and H.B. Dull (Eds.) *Closing the Gap: The Burden of Unnecessary Illness.* Oxford University Press, New York. Helmick, C.G., P.M. Griffin, D.G. Addiss, R.V. Tauxe, and D.D. Juranek. 1994. ''Infectious Diarrheas.'' In: Everheart, JE, ed. *Digestive Diseases in the United States: Epidemiology and Impact.* USDHHS, NIH, NIDDKD, NIH Pub. No. 94–1447, pp. 85–123, Wash, DC: USGPO.

Roberts, T., K.D. Murrell, and S. Marks. 1994. ''Economic Losses Caused by Foodborne Parasitic Diseases,'' *Parasitology Today.* vol. 10, no. 11: 419–423.

Schuchat, Anne, CDC, personal communication with T. Roberts at the FDA Science Forum on Regulatory Sciences, Washington, DC, September 29, 1994.

Tauxe, R.V., ''Epidemiology of Campylobacter jejuni infections in the United States and other Industrialized Nations.'' In Nachamkin, Blaser, Tompkins, ed. *Campylobacter jejuni: Current Status and Future Trends,* 1994, chapter 2, pages 9–19. Tauxe, R.V. and P.A. Blake, 1992. ''Salmonellosis'' Chap. 12. In: Public Health & Preventative Medicine, 13th ed. (Eds: Last JM: Wallace RB; Barrett-Conner E) Appleton & Lange, Norwalk, Connecticut, 266–268.

Tauxe, R.V., N. Hargrett-Bean, C.M. Patton, and I.K. Wachsmuth. 1988. ''Campylobacter Isolates in the United States, 1982–1986,'' *Morbidity and Mortality Weekly Report,* vol 31, no. SS–2: pages 1–14.

TABLE 5.—MEDICAL COSTS AND PRODUCTIVITY LOSSES ESTIMATED FOR SELECTED FOODBORNE PATHOGENS, 1993

| Pathogen | Foodborne illness | | Foodborne * costs (bil $) | Percent from meat/poultry (%) | Meat/poultry related | | Total costs * meat/poultry (bil $) |
|---|---|---|---|---|---|---|---|
| | Est. No. of cases | Est. No. deaths | | | Est. No. of cases | Est. No. deaths | |
| Bacteria: | | | | | | | |
| Campylobacter jejuni or coli | 1,375,000–1,750,000 | 110–511 | 0.6–1.0 | 75 | 1,031,250–1,312,500 | 83–383 | 0.5–0.8 |
| Clostridium perfringens ** | 10,000 | 100 | 0.1 | 50 | 5,000 | 50 | 0.1 |
| Escherichia coli 0157:H7 | 8,000–16,000 | 160–400 | 0.2–0.6 | 75 | 6,000–12,000 | 120–300 | 0.2–0.5 |
| Listeria monocytogenes | 1,526–1,767 | 378–485 | 0.2–0.3 | 50 | 763–884 | 189–243 | 0.1–0.2 |
| Salmonella | 696,000–3,840,000 | 696–3,840 | 0.6–3.5 | 50–75 | 348,000–2,880,000 | 348–2,880 | 0.3–2.6 |
| Staphylococcus aureus ** | 1,513,000 | 1,210 | 1.2 | 50 | 756,500 | 605 | 0.6 |
| Subtotal | 3,603,526–7,130,767 | 2,654–6,546 | 2.9–6.7 | N/A | 2,147,513–4,966,884 | 1,395–4,461 | 1.8–4.8 |
| Parasite: | | | | | | | |
| Toxoplasma gondii | 2,056 | 41 | 2.7 | 100 | 2,056 | 41 | 2.7 |
| Total | 3,605,582–7,132,823 | 2,695–6,587 | 5.6–9.4 | N/A | 2,149,569–4,968,940 | 1,436–4,502 | 4.5–7.5 |

Source: ERS, 1993

* Column rounded to one decimal place.

** Roberts' rough approximation of costs in ''Human Illness Costs of Foodborne Bacteria'', *Amer. J. of Agricultural Economics*, vol. 71, no. 2 (May 1989) pp. 468–474 were updated to 1993 dollars using the Consumer Price Index (all items, annual average). Cost estimates for other pathogens are more detailed, see the following for a discussion of the methodology:

listeriosis—Roberts, Tanya and Robert Pinner, ''Economic Impact of Disease Caused by *Listeria monocytogenes*'' in *Foodborne Listeriosis* ed. by A.J. Miller, J.L. Smith, and G.A. Somkuti. Elsevier Science: Amsterdam, The Netherlands, 1990, pp. 137–149,

*E. coli* O157:H7—Roberts, T. and Marks, S., ''*E. coli* O157:H7 Ranks as the Fourth Most Costly Foodborne Disease,'' *FoodReview*, USDA/ERS, Sept-Dec 1993, pp. 51–59.

salmonellosis—Roberts, Tanya, ''Salmonellosis Control: Estimated Economic Costs,'' *Poultry Science*. Vol. 67 (June 1988) pp. 936–943,

campylobacteriosis—Morrison, Rosanna Mentzer, Tanya Roberts, and Lawrence Witucki, ''Irradiation of U.S. Poultry—Benefits, Costs, and Export Potential, *FoodReview*, Vol. 15, No. 3, October-December 1992, pp. 16–21, congenital toxoplasmosis—Roberts, T., K.D. Murrell, and S. Marks. 1944. ''Economic Losses Caused by Foodborne Parasitic Diseases,'' *Parasitology Today.* vol. 10, no. 11: 419–423; and Roberts, Tanya and J.K. Frenkel, ''Estimating Income Losses and Other Preventable Costs Caused by Congenital Toxoplasmosis in People in the United States,'' *J. of the Amer. Veterinary Medical Assoc.*, vol. 196, no. 2 (January 15, 1990) pages 249–256.

N/A indicates item is not-applicable.

ERS is currently working on a sensitivity analysis for their cost of illness estimates for foodborne illness. The sensitivity analysis replaces the LS VOSL estimates with estimates found in the literature on wage-risk studies. Preliminary findings show that the estimates of the total cost of foodborne illness will increase greatly when these higher VOSL estimates are used.

FSIS considers that the existing conservative estimates are appropriate considering the controversy and uncertainty. The conservative estimates are more than sufficient to justify the

final rule implementing a new HACCP-based regulatory program for meat and poultry. This final RIA uses the cost of illness estimates shown in Table 5.

Another comment stated that the cost of illness estimates are low because they do not account for increases in productivity. In response, the Agency notes that ERS used Landefeld and Seskin's estimates for the value of a statistical life, and those estimates do include an estimated 1% annual increase in productivity.

One commenter suggested that a methodology based on earning power may overestimate the value of life where many deaths from foodborne illness are the very elderly, the immunocompromised and the terminally ill. This commenter also noted that while all deaths are tragic, from a strictly economic standpoint many of these tragic cases have little or no productivity left and in fact are utilizing resources at the rate of $3,000 to $12,000 or more dollars per month of maintenance.

The cost of illness methodology used by ERS does account for the fact that older individuals have lower remaining earning power than younger individuals. This difference was taken into account when estimating the costs of lost productivity for *salmonellosis* patients. Different Landefeld and Seskin estimates of the values of statistical life were used for the different age categories. The methodology used U.S. death certificate data to estimate that the average age for patients who die from salmonellosis is over 65 years. The concept of a statistical value of life accounts for the fact that older individuals may continue to work or be retired or be patients under long term health care.

3. Percentage of Foodborne Illness and Cost of Foodborne Illness Attributable to Meat and Poultry

The fifth column of Table 5 includes estimates on the percentage of foodborne illness attributable to meat and poultry products. A separate estimate has been developed for each pathogen. These estimates are based on outbreak data reported under the CDC Foodborne Disease Outbreak Surveillance System and on data from community-based and other epidemiologic studies. Major data sources are cited in the preamble to the final rule. An assumption is made in this analysis that the source of foodborne pathogens, i.e., meat and poultry versus dairy products, seafood, vegetable, etc., has no effect on the cost of illness. The Department is not aware of any data indicating that the severity of foodborne illness cases varies by source of pathogens.

Comments noted that the Department had increased the percentage of foodborne illness attributable to meat and poultry from the earlier rulemaking for safe handling labels. One commenter stated that the Department has not revealed any new information which would support such an increase.

At this time, data on incidence of foodborne illnesses and the percentage of cases attributable to different food items are limited. Estimates by pathogen have been made by experts at CDC and USDA, based on a variety of studies. However, these are, indeed, estimates: FSIS does not have exact numbers. The estimates in the 1993 Federal Register document were relatively crude, assuming that 100% of *Campylobacter* and *E. coli* O157:H7 cases, 96% of *Salmonella* cases, and 85% of *Listeria* cases were foodborne, and that, for all bacterial pathogens, a flat 50% of foodborne cases were attributable to meat and poultry. The 1995 document looked at the numbers in a somewhat more sophisticated way, evaluating each pathogen individually and, where appropriate, giving ranges for, first, percentage of cases which were foodborne, and, secondly, percentage of cases which were attributable to meat and poultry. Nonetheless, when all of the various percentages are multiplied out, estimates of total cases attributable to meat and poultry were remarkably similar, as shown below in Table 6.

TABLE 6.—PERCENTAGE OF FOODBORNE ILLNESS ATTRIBUTABLE TO MEAT AND POULTRY

| Pathogen | Percentage of total cases attributed to meat and poultry [a] 1993 (percent) | Percentage of total cases attributed to meat and poultry, 1995 (percent) | Estimated total cases, 1993 | Estimated total cases, 1995 |
|---|---|---|---|---|
| Campylobacter | 50 | 41–53 | 1,050,000 | 1,031,250–1,312,500 |
| Salmonella | 48 | 43–72 | 921,600 | 348,000–2,880,000 |
| E. coli O157:H7 | 50 | 60 | 3,834–10,22 | 46,000–12,000 |
| Listeria | 43 | 43–48 | 649–672 | 763–884 |

[a] Reflects percentage of foodborne multiplied by percentage attributable to meat and poultry.

Most other comments related to the estimates on the percentage of foodborne illness attributable to poultry. Comments questioned the high incidence of poultry-related foodborne illness when even, as a commenter asserted, public health authorities tell consumers that the problem with poultry meat is not due to consumption because poultry is cooked. Comments questioned whether cross-contamination in the kitchens could possibly generate such high levels of foodborne illness. Related comments suggested that if cross-contamination was such a serious problem, the data would show more outbreaks and fewer single cases. Other comments suggested that the cost of salmonellosis attributed to poultry was high because of the high incidence of *Salmonella enteritidis* in eggs and requested that the Agency exclude any foodborne illness costs associated with eggs, because those issues are outside the scope of this rulemaking. Another comment cited an Australian finding that the *Campylobacter* strains that infect chickens are not the strains that primarily infect humans.

The Department agrees that undercooked poultry is not a primary cause of foodborne illness. The preamble to the proposal stated that the majority of salmonellosis results from cross-contamination. The best available estimates for foodborne illness do suggest that a high incidence of illness is attributable to cross-contamination in kitchens—both household kitchens and food-service establishments.

The comment suggesting that cross-contamination would have led to more outbreaks makes sense, if the available estimates on incidence were heavily

based on outbreak data. However, as mentioned in the proposal, it is widely recognized that CDC outbreak data do not provide accurate estimates of foodborne disease incidence. The outbreak data are more useful in identifying factors that lead to illness and have been used to estimate proportions of illness attributable to specific food groups. They do not play a major role in the overall incidence estimates. The existing incidence estimates are for total cases including both individual cases and multiple cases. The methodology used does not distinguish between outbreaks and single cases. Just as there are unreported individual cases of foodborne illness, there are unreported cases where entire households or portions of households experience foodborne illness due to cross-contamination in household kitchens. As discussed above, the estimates of foodborne illness were derived from both CDC outbreak data and community-based epidemiologic studies.

The outbreak data (two or more individuals ill from the same source) are compiled by CDC from reports that are voluntarily submitted from state and local health authorities. The laboratory reporting system for *Salmonella* only captures information on those cases where a patient sees a doctor, the doctor collects a stool culture and sends the culture to a participating laboratory and the laboratory can perform the specific diagnostic test. The estimates for overall disease incidence are derived using both databases plus data collected from population-based studies in specific geographic areas. The current (initiative) collaborative surveillance project should improve the estimates in the future.

The comment referring to the Australian finding is referring to an article by Korolik, et al, published in the May 1995 issue of the Journal of Clinical Microbiology, entitled, ''Differentiation of *Campylobacter jejuni* and *Campylobacter coli* strains by Using Restriction Endonuclease DNA Profiles and DNA Fragment Polymorphisms.'' The study was undertaken to determine if DNA fingerprinting technologies could identify strains of *Campylobacter* in chickens that cause disease in humans.

FSIS reviewed the article and concluded that the study did not refute U.S. epidemiologic studies showing that approximately 50% of human *Campylobacter* infections are due to poultry. To confirm FSIS's interpretation of the study, a staff member contacted the author, Dr. Victoria Korolik, in Australia. She confirmed that her study does not shed doubt on the role of poultry in human *Campylobacter* infections.

4. Pathogens Addressed by the Rule

While the proposed rule indicated that HACCP systems will be designed to control all public health hazards, the preliminary benefits analysis assumed that the primary benefits will come from controlling the three most common enteric pathogens of animal origin: *Campylobacter jejuni/coli, E. coli* O157:H7, *Salmonella* and one environmental pathogen *Listeria monocytogenes*. Two other pathogens—*Clostridium perfringens* and *Staphylococcus aureus* primarily become or create hazards in meat and poultry products as prepared in restaurants, other commercial kitchens, and in homes. Consequently, the proposed regulatory program, which focuses on the manufacturing sector, will not significantly affect the presence of these organisms on meat and poultry products.

The public comments did not address the assumption that the proposed rule would have the most impact on the four pathogens identified above and that benefits would be most appropriately discussed in terms of reducing the level of these pathogens. This final RIA will continue to assume that the HACCP-based regulatory program will have the most impact on the four pathogens identified in the preliminary analysis.

The preliminary benefits analysis also included an assumption concerning the percentage of the four pathogens that contaminate the meat and poultry supply at inspected establishments or grow from contamination that occurs at inspected locations. Based on the expert judgment of FSIS microbiologists, the preliminary benefit analysis assumed that 90 percent of the four pathogens result from contamination that occurs at inspected establishments.

The public comments did not directly address the estimate that slaughter and processing establishments are the source of 90 percent of enteric pathogen contamination. There were, however, a large number of comments that cited studies or estimates that show or indicate that the majority of foodborne illness can be attributed to improper cooking, recontamination and other mishandling and abuse in the food service and home environment. Many comments cited data presented in the 1994 CAST Report which ''demonstrated'' that only 6.9 percent of outbreaks were ''attributable'' to the food processing establishments. Other comments referred to ''a well-recognized fact that 97 percent of the problems with foodborne illness occur outside the realm of state and federal inspection.'' Other comments attributed the 97 percent figure to a Special Report by the American Association of Meat Processors. These types of comments were presented in a manner indicating that the commenters believe that the data attributing ''cause'' to the food service or home environment directly contradicts the Agency's estimate that inspected establishments are the source of 90 percent of the four pathogens addressed by this rule.

In response, the Agency points out that the studies cited by commenters concluding that high percentages of foodborne illness are attributable to factors such as temperature abuse and mishandling do not conflict with either the assumption that slaughter and processing establishments are the source of 90 percent of enteric pathogen contamination or the assumption discussed later concerning the effectiveness of HACCP in reducing that contamination. Occurrence of foodborne disease is a multi-step process. The first, and critical, step is the introduction of a pathogen into or onto the raw product. If a pathogen is present, then subsequent temperature abuse or mishandling may permit bacterial counts to increase to levels which increase the likelihood that illness will occur; mishandling may result in cross-contamination of other foods which are not cooked before being eaten; or improper cooking may not kill all pathogenic bacteria present in the product. In these instances, it may be said that the illness was ''caused'' by improper handling. However, disease would not have occurred if the pathogen had not been present on the raw product in the first place.

The CAST study included a table showing factors contributing to the occurrence of 1,080 outbreaks occurring from 1973 to 1982. That table consisted of data from the CDC national foodborne disease surveillance system that was published in an article in the Journal of Food Protection by Frank L. Bryan in 1988. The CAST study and journal articles use terminology like ''factors that contribute'' and address the location or type of employee/consumer where any mishandling or mistreatment of food occurred. The focus of these studies is to enhance our understanding of the sequences of events and behaviors that lead to foodborne illness since behavioral modification for the food preparer and consumer at the end of the food chain may have the greatest impact on the incidence of foodborne disease. Many of the comments are written in a manner that blurs the distinction

between factors in the kitchen that may permit an outbreak to occur from slaughter-origin contamination and those that would have caused an outbreak despite the absence of contamination of the raw ingredients.

The comments referring to the CAST study or directly to CDC estimates have not interpreted the Foodborne Disease Outbreak Surveillance Data correctly. The standard CDC foodborne disease outbreak report form does not include a question about whether the food processing industry was involved, and while many foodborne outbreaks have a chain of causation, investigators may differ in their assessment of the point or points in the chain to which primary responsibility for occurrence of the outbreak should be assigned.

The Bryan article used for the CAST study had the following summary concerning the role of food processing establishments: ''Many of the animals that enter abattoirs are either infected or contaminated with foodborne pathogens and further spread occurs during processing. Hence, abattoirs and raw-product processing establishments must accept some of the blame of spreading salmonellae and other pathogens to many carcasses and pieces of meat. These products are major sources of pathogens for food-service establishments and homes where further abuse (e.g., inadequate cooking or cross contamination) leads to outbreaks of foodborne illness.''

The comments have not provided any basis for changing the expert judgment of FSIS microbiologists that inspected establishments are the source of 90 percent of the four pathogens addressed by the final rule. This final benefits analysis is based on this assumption.

5. Effectiveness of the Rule in Reducing Pathogens

In accordance with the assumption that meat and poultry establishments are the source of 90 percent of the four pathogens addressed by the rule, the preliminary analysis calculated the benefits under a scenario where the proposed rule would eliminate essentially 100 percent of those pathogens that enter the meat and poultry supply at inspected processing establishments. In other words, for the preliminary analysis, FSIS calculated an estimate of maximum benefits by assuming the rule would eliminate 100 percent of the 90 percent.

By assuming this scenario, FSIS was not predicting that it believed that the rule would result in elimination of 100 percent of those pathogens in the manufacturing sector. Rather, the Agency was acknowledging that it has responsibility for having a food safety objective that recognizes the scope of the problem and attempts to reduce pathogens in that sector as much as possible, since without pathogens, no amount of subsequent abuse would result in foodborne illness.

By presenting a sensitivity analysis in the proposal, FSIS intended to clarify that the benefit estimates were a maximum and not a prediction of what is likely to happen. The distinction was unclear to many commenters who expressed doubt that the proposed HACCP program would result in a 90 percent reduction in pathogens. A large number of comments on the potential effectiveness of HACCP programs contrasted the FSIS estimates with those contained in the recent study by the Institute of Food Science and Engineering, Texas A&M University, titled ''Reforming Meat and Poultry Inspection: Impacts of Policy Options,'' (hereafter referred to as the IFSE study). Both FSIS and IFSE estimates are useful as assumptions rather than as quantitative predictions of potential effectiveness of HACCP.

The ISFE study examined four policy options for addressing pathogens in the meat and poultry supply. One option called for mandatory HACCP for inspected slaughter and processing establishments and estimated that mandatory HACCP in inspected establishments would produce a 20 percent reduction in pathogens. The difference in the FSIS and IFSE estimates is not based on data but on assumptions for different ''HACCP'' scenarios.

The HACCP program scenario considered in the IFSE study did not assume a mandatory pathogen reduction performance standard. Requiring process control without a standard could lead to processes that are well controlled at unacceptable pathogen levels. The Agency would agree that such a situation would result in less pathogen reduction. FSIS believes that a standard is necessary to encourage innovation and provide the impetus for continuing improvement and increasing effectiveness. In estimating effectiveness, the IFSE study noted that ''with experience and additional research, it is possible that higher levels of reduction in pathogens could be achieved * * *''.

Another major difference between the two program scenarios is that the IFSE program does not include a prerequisite requirement for SOP's. SOP's could cover potential sources of enteric and environmental pathogens that are not be covered under a HACCP plan. However, as discussed in Section I, this analysis discusses benefits of SOP's in terms of increased productivity for inspection resources and clarity of responsibilities.

Several comments refer to the IFSE estimates as being more objective or ''scientific'' than those in the Agency's analysis. The IFSE authors characterize their own effectiveness estimates as ''the consensus judgment of the task force'' or ''the most reasonable expectation.'' The IFSE estimates are judgments, as are the Agency's estimates.

A general comment related to the effectiveness issue stated that while HACCP remains an interesting theoretical concept, it is still only a concept that has never been tested on a meaningful scale under actual meat establishment conditions, and never proven to significantly improve the microbial quality of the finished product. Although HACCP has been tested in food processing establishments to the satisfaction of scientists, food technologists, and industry management to produce safe food, the Agency recognizes that the potential effectiveness of HACCP in reducing pathogens within a regulatory framework is unknown at the present time. FSIS conducted a pilot HACCP study in nine establishments from 1991 to 1993. Findings regarding pathogen reduction effectiveness were inconclusive. FSIS did not receive any data during the comment period from establishments currently operating HACCP systems. Rather than select an arbitrary effectiveness estimate, or use the maximum potential 100 percent estimate from the preliminary analysis, this RIA will present a range of effectiveness estimates and show the minimum level necessary to generate net benefits.

6. Estimated Reduction in Cost of Foodborne Illness

Several comments focused on the issue that the relationship between pathogen reductions at the manufacturing stage and foodborne illness reductions is unknown. The comments recognize that the proposal did acknowledge that little data exist on the relationship between pathogen levels and incidence of illness. One comment pointed out that FSIS recognized that the pathogen testing requirements that are part of the proposal will help to elucidate the relationship between pathogen contamination and foodborne disease. The commenter concluded that it did not seem reasonable for the Agency to rely on an assumption, whose very validity can only be tested by the implementation of the proposal under examination, to justify the proposal.

Other commenters concluded that the Agency needed to develop better data or complete a thorough risk assessment that would establish the public health benefits of pathogen reduction before proceeding.

The comments asking for better data or requesting a thorough risk assessment are not comments on the cost-benefits analysis. These comments imply there is insufficient evidence to support new pathogen reduction efforts. This issue is addressed in the preamble to the final rule. The comments have made a policy judgment with which the Department does not agree.

For the benefits analysis included with the proposed rule, FSIS assumed that a reduction in pathogens will lead to a corresponding proportional reduction in foodborne illness. The Department notes that the IFSE study referred to favorably by many commenters used the same method for estimating public health benefits as did FSIS, i.e., a reduction in pathogens leads to a proportionate reduction in illness and death. The Agency is aware that the proportionate reduction method is an assumption that has not been tested or validated. However, the Agency also recognizes that research methodology for relating pathogen levels at establishments to incidence of illness is in its early developmental stages. Risk models for foodborne pathogens are likely to develop as the basis for regulatory decision-making in the future. The Agency believes the implementation of mandatory HACCP will improve food safety and protect public health while research in modeling risk associated with foodborne pathogens continues.

The Agency has and continues to support any effort to improve the quality of data and methodology available for risk assessment of illness caused by foodborne biological agents. FSIS, FDA, CDC, and local public health departments are collaborating with state health departments and local investigators at five locations nationwide to identify more accurately the incidence of foodborne illness, especially illness caused by *Salmonella* and *E. coli* O157:H7.

### *G. Summary*

The final rule addresses four pathogens that are estimated to cause from $1.1 to $4.1 billion in annual illness and death costs attributable to meat and poultry products. The rule addresses 90 percent of that cost of illness or from $0.99 to $3.69 billion annually. FSIS recognizes that the actual effectiveness of the final requirements in reducing pathogens is unknown, and presents a range of benefits based on reducing varying percentages of the $0.99 to $3.69 billion in annual cost of foodborne illness addressed by this rule.

References

International Commission on Microbiological Specifications for Foods (ICMSF). 1980. *Microbial Ecology of Foods: Factors Affecting Life and Death of Microorganisms.* Volume I. Academic Press, New York. Pp. 215–231.

Rolfe, R.D. 1991. Population dynamics of the intestinal tract. In: *Colonization Control of Human Bacterial Enteropathogens in Poultry.* Ed. L.C. Blankenshipp, J.S. Bailey, N.A. Cox, S.E. Craven, R.J. Meinersmann, N.J. Stern. Academic Press, Inc., New York. Pp. 59–76.

Centers for Disease Control (CDC). 1988. Campylobacter isolates in the United States, 1982–1986. In: CDC Surveillance Summaries. June 1988. MMWR 1988; 37 (No. SS–2:1–13).

Blaser, M.J. & L.S. Newman. 1982. A review of human salmonellosis: I. Infective dose. Reviews of Infectious Disease. 4(6):1096–1106.

Buchanan, R.L. & R.C. Whiting. 1996. Risk assessment and predictive microbiology. J. Food Protection. 31–36.

Burmaster, D.E. & P.D. Anderson. 1994. Principles of good practice for the use of Monte Carlo techniques in human health and ecological risk assessments. Risk Analysis. 14(4):477–481.

Council for Agricultural Science and Technology (CAST). 1994. Foodborne pathogens: Risks and consequences, Report No. 122, p. 87.

Haas, C.N. 1983. Estimation of risk due to low doses of microorganisms: A comparison of alternative methodologies. Am. J. Epidemiol. 118:573–582.

National Research Council. 1983. Committee on Institutional Means for Assessment of Risks to Public Health. *Risk Assessment in the Federal Government: Managing the Process.* National Academy Press, Washington, DC p. 191.

Tappero, J.W. *et al.* 1995. Reduction in the Incidence of Human Listeriosis in the United States; Effectiveness of Prevention Efforts? Journal of the American Medical Association. 273(14):1118–1122.

Gellin, B., C.V. Broome, R. Weaver and A.W. Hightower. [Listeriosis Study Group.] Geographic Differences in Listeriosis in the U.S. (Abstract). In Program and Abstracts of the twenty-seventh International Conference on Antimicrobial Agents and Chemotherapy. p. 155. Washington, DC: American Society for Microbiology, 1987.

## V. Cost Analysis

### *A. Introduction*

The final HACCP rule includes several regulatory components all directed at improving process control in meat and poultry operations in order to reduce the risk of foodborne illness associated with meat and poultry products. The requirements of the final rule are organized around the following three sections:

- Requirements that all inspected establishments develop and implement sanitation Standard Operating Procedures (SOP's) within 6 months.
- Requirements that all inspected establishments develop and implement HACCP programs within the 18 to 42 month time period following publication. Scheduling will be based on establishment size.
- Requirements that (1) all establishments slaughtering cattle, swine, chickens, or turkeys, or producing a raw ground product from beef, pork, chicken or turkey comply with new pathogen reduction performance standards for *Salmonella* and (2) all establishments slaughtering cattle, swine, chicken or turkeys implement microbial testing programs using generic *E. coli* within 6 months. Compliance with the pathogen reduction performance standards for *Salmonella* will be required at the time the establishment is required to implement HACCP.

This cost analysis is presented in three sections. The first section describes the methodology used in generating cost estimates. The next section addresses the regulatory flexibility designed to reduce the burden on small business. The last section presents the cost estimates for each regulatory requirement. For each broad requirement, the discussion of the cost estimates is organized using the following five topics:

- Summary of the requirements in the final rule identifying any changes from the proposal.
- Review of the cost estimates from the preliminary RIA.
- Summary of the comments related to the preliminary cost estimates.
- Response to the comments.
- Final cost estimates.

### *B. Methodology for Cost Analysis*

The final pathogen reduction/HACCP rule includes regulatory requirements that are directed at improving the control over food processing operations. In general, compliance with these requirements requires expenditures of time, i.e., employee hours to develop plans, monitor critical control points, record findings and collect and analyze samples. This final RIA is based on time required by four categories of employees that were defined in the supplemental cost analysis. These include the following:

- Quality Control manager earning $25.60 per hour.
- Supervisors or QC technicians that review findings and records at $18.13 per hour.

• Laboratory technicians earning $18.13 per hour.

• Establishment employees/production workers that would monitor sanitation and HACCP programs or collect samples at $12.87 per hour.

The four categories of wages are based on 1993 data adjusted for 1994 dollar inflation from the Bureau of Labor Statistics and *Meat and Poultry Magazine* and include a 33 percent overhead requirement for benefits such as health insurance and retirement contributions. Unless otherwise noted, the analysis assumes that all establishments and employees work a standard 52 week, 260 day, 2080 hour work year.

This final cost discussion is based on retracing the steps and/or calculations of the preliminary analysis and discussing related public comments in the appropriate sections. Other comments that are related to the analysis but do not reflect directly on the methodology are summarized at the end of the analysis in Appendix A.

This analysis makes frequent references to the Enhanced Economic Database. In 1994, the Research Triangle Institute (RTI) took a compilation of existing FSIS databases containing establishment production or inspection data and added data on annual sales and employment from sources that included Dun and Bradstreet and American Business List databases. Actual estimates for annual sales and number of employees were available for approximately 80 percent of the establishments. In other cases, estimates for sales and number of employees were developed using the employment/sales data for establishments producing the same type and volume of product.

The enhanced database includes production data (number of head slaughtered, pounds of product produced) from 1993 for all federally-inspected establishments in operation as of August 1994. The preliminary analysis and this final RIA combine 1993 production data with the population of federally and state-inspected establishments that were in operation as of August 1994. As of August 1994, there were 6,186 federally inspected and 2,893 state inspected establishments. These 9,079 establishments include a total of 11,719 ''operations''—2,597 red meat slaughter operations, 364 poultry slaughter operations and 8,758 further processing operations.

This final analysis assumes a constant level of 9,079 inspected establishments. The analysis does not attempt to account for costs associated with exits from or entries into the marketplace. For operations that are entirely new, or include a new processing operation, the requirements for HACCP plans and sanitation SOPs will increase the one-time, up-front cost of entering the market. If marketplace entry involves the purchase of an existing business, the business will already have an existing HACCP plan and sanitation SOP. In these cases, the acquisition cost of the business would include the value of the existing HACCP plan and SOP.

There should be minimal additional cost for HACCP and SOP plan development for new construction that expands a firm by replicating an existing operation in a new location. This type of new establishment can apply HACCP and SOP plans that have been developed for a similar existing establishment. This analysis has assumed that each establishment is independent and has not reduced cost estimates to account for firms that operate several similar establishments.

The preliminary analysis developed cost estimates for three sizes of manufacturing establishments. Most of the costs that involve employee time are influenced by a number of factors including the physical size of the establishment, the volume of production, the type of production practices and the number or production lines. The preliminary analysis used the data on annual sales developed by RTI because the sales data correlated reasonably well with size and production volume data and the Agency had an estimate of sales for 6,186 federally inspected establishments.

For the preliminary analysis the Agency defined a large establishment as one with over $50 million in annual sales, a medium establishment as one with between $2.5 and $50 million and a small establishment as one with less than $2.5 million in annual sales. For calculating costs, the Agency collected data from the field based on these three size categories. Public comments provided good reason to change size definitions for implementation (regulatory flexibility) purposes and the Agency has done so for the final rule. This does not affect the accuracy of proposed or current cost estimates based on previously collected data. The final analysis uses the old categories for presenting cost data to facilitate comparisons and minimize confusion. To summarize, this cost analysis uses the terms high, medium and low volume producers for cost presentation that involves average establishment costs and uses the terms large, small and very small business for discussing regulatory flexibility. The cost and flexibility principles do not overlap in this analysis.

Commenters pointed out that in comparing total costs with the value of current production, the preliminary analysis did not address impacts on producers, i.e., the costs that would be passed back to livestock producers. FSIS recognizes that some costs will be passed back to producers in terms of lower prices for live animals and other costs will be passed forward in terms of higher consumer prices. Other costs may have to be absorbed by slaughter and processing establishments. Because the necessary knowledge of empirical cost structures and supply and demand elasticities is inadequate, FSIS does not offer any quantitative estimates of the distribution of costs of this rule on various sectors of the production and marketing chain. The aggregate cost estimate establishes an upper bound on the costs any sector might ultimately bear.

There are two types of potential costs that were not addressed in the preliminary cost analysis. The first type of cost is the cost of taking corrective action when routine monitoring of a CCP finds a deviation from a critical limit. The critical limit could be associated with assuring compliance with existing regulatory requirements or it could be a limit set to assure compliance with the new pathogen reduction standards for *Salmonella* or the criteria established for generic *E. coli*. Corrective action would also occur when FSIS would find a problem with either a HACCP plan or a sanitation SOP.

The second type of potential cost is related to the question of whether existing processing methods are adequate to meet the pathogen reduction performance standards for *Salmonella* and the criteria for generic *E. coli*. It is expected that some establishments will have to make permanent changes to their existing production practices to have a HACCP-based program that assures compliance with the new standards and criteria. The final rule raises a third type of potential cost when it outlines the Agency's plans for using the results of its own *Salmonella* testing program for regulatory purposes. Whether or not this testing leads to industry testing costs depends on whether the government testing indirectly forces an establishment to regularly conduct its own testing.

The preliminary analysis did address a fourth category of potential costs that includes the cost of necessary materials, such as thermometers and test kits, that establishments will need to

systematically monitor their processes. Recognizing that the rule does not make any equipment obsolete, the preliminary analysis suggested costs of from $10 to $20 per establishment. These costs were not included in the overall cost summary.

Potential costs are addressed in this final analysis under Section V.D.2., Costs of Meeting Pathogen Reduction and Microbial Sampling Requirements.

*C. Regulatory Flexibility*

The Regulatory Flexibility Act (P.L. 96–354) requires analyzing options for regulatory relief for small businesses. This section reviews the regulatory relief provided in the proposal, responds to comments related to the definition of small business used in the proposal and summarizes the regulatory relief for small business provided for in the final rule. In Section II, this analysis addressed the option of providing an exemption for small business noting that comments on an exemption were mixed with a substantial number of comments from small businesses strongly opposing an exemption.

The proposed rule intended to spread the implementation of HACCP over a three year period. To minimize the burden on small establishments, they would be given a maximum time of 36 months to develop and implement their HACCP plans. A small establishment was defined as one with annual sales of less than $2.5 million.

The decision to use the above definition generated a large number of comments. ''Very small'' establishments commented that they could not compete with a relatively ''large'' business with annual sales of $2.5 million. For example one commenter stated that: ''calling an establishment, small, that produces $2,500,000 worth of product annually is not fair to those establishments producing far less.'' Other comments suggested that by defining small at the $2.5 million level, the Agency demonstrated that it does not understand what a small business is. Comments from businesses with annual sales of $2.5 to $10.0 million or even $25.0 million stated that they should also be considered small businesses. Commenters also pointed out that other Federal agencies use different definitions. For example, one commenter noted that OSHA uses 50 employees as their criterion for a ''small business.'' Others commented that FSIS should or must use the existing definition of fewer than 500 employees published by the Small Business Administration (SBA).

Several comments promoted a set of requirements distinguishing ''small'' from ''very small'' establishments. ''Very small'' establishments would only be required to implement the proposed provisions on sanitation standard operating procedures, antimicrobial treatment of carcasses, and time and temperature provisions. They would be exempt from routine microbial testing and long-term provisions of HACCP as long as annual sales do not exceed $1 million (not counting ''pass through''). The establishments would still be subject to incidental sampling for microbial testing as determined by the Administrator. Required implementation of the three near-term initiatives would be 12 months after publication of the final rule.

The ''small'' establishments (between $1.0 and $2.5 million) would be required to implement SOPs, antimicrobial treatment, time and temperature provisions, and limited routine sampling, in proportion to the number of slaughtered animals and/or poundage of processed products. The establishments would still be subject to incidental sampling for microbial testing as determined by the Administrator. They would be exempt from long-term provisions of HACCP as long as annual sales, as defined above, do not exceed $2.5 million. The required implementation of all near-term initiatives would be six months.

There were other comments that suggested variations on the above definitions and requirements for ''small'' and ''very small'' establishments. For example, one State department of agriculture recommended the same requirements for ''small'' and ''very small'' establishments but suggested that size criteria based on head slaughtered or pounds produced would be more practical. Another State department of agriculture recommended that a ''every small'' plant be defined based on the number of employees (no more than 20 full-time), slaughter volume (no more than 2,500 animals per year), or processing volume (100,000 pounds of meat and/or poultry products per year). The recommendation suggested that a plant in this category would be required to implement the provisions of the proposed rule pertaining to sanitation SOP's and time-temperature requirements. Antimicrobial treatment of carcasses would be voluntary, and such a plant would be exempted from microbial testing as proposed. Implementation of a HACCP program would be initially voluntary, and phased in with considerations in the areas of documentation and record-keeping for the limited work force.

FSIS has considered the above regulatory framework for ''small'' and ''very small'' establishments. Some of the suggestions are no longer applicable because major provisions of the proposed rule have been dropped. FSIS believes it has addressed the other concerns in more appropriate ways.

FSIS was aware of SBA Size Standards during the development of the proposed rule. If FSIS used the size standard for meat and poultry ''manufacturing'' firms, over 94 percent of the federally inspected establishments would meet the criterion of having fewer than 500 employees. FSIS is also aware that there are six different SBA size standards that apply to the 6,415 FSIS official establishments. FSIS determined the SBA size standards by themselves are not appropriate for meeting FSIS's need to sequence HACCP implementation.

Table 7 shows the distribution of 6,415 official establishments by Standard Industrial Classification (SIC) code. The SIC codes were developed to promote the comparability of statistics describing various facets of the Nation's economy. The SIC codes were used as part of the Enhanced Economic Analysis Database developed by Research Triangle Institute to represent all FSIS inspected establishments. As can be seen from Table 7, a significant portion of official establishments are not in an SIC Code for manufacturing. Food manufacturing establishments have a 4-digit SIC Code beginning with 20. The Census of Manufacturers published by the Department of Commerce characterizes the meat and poultry manufacturing industry by summarizing data for SIC Code 2011—Meat Packing Establishments, SIC Code 2013—Sausages and Other Prepared Meats, and SIC Code 2015—Poultry Slaughtering and Processing. The SBA Size Standards in Table 7 are published in the Code of Federal Regulations—13 CFR, Chapter 1, Section 121.601.

In a written comment, the Office of Advocacy, Small Business Administration claimed that FSIS was wrong in concluding that one-third of federally inspected establishments would have the maximum time for compliance with HACCP requirements using the criterion of $2.5 million in annual sales. In supporting their claim, they cited U.S. Census Bureau data. However, Census data do not accurately describe the federally inspected meat and poultry industry. As shown in Table 7, the problem is that less than half of the firms are classified in the three 4-digit SIC Codes identified above that define meat and poultry manufacturing. FSIS addressed this data

problem by contracting with RTI to develop a more accurate economic profile of federally inspected meat and poultry establishments.

TABLE 7.—ESTABLISHMENTS STANDARD INDUSTRIAL CLASSIFICATION

| SIC code | Standard industrial classification | Number of establishments | Cumulative number of establishments | SBA size standard |
|---|---|---|---|---|
| 2011 ... | Meat packing establishments | 1,503 | 1,503 | 500 employees. |
| 5147 ... | Meats and meat products | 1,312 | 2,815 | 100 employees. |
| 2013 ... | Sausages and other prepared meats | 939 | 3,754 | 500 employees. |
| 2015 ... | Poultry slaughtering and processing | 438 | 4,192 | 500 employees. |
| 4222 ... | Refrigerated warehousing and storage | 356 | 4,548 | $18,500,000. |
| 5421 ... | Meat and fish markets | 309 | 4,857 | $5,000,000. |
| 5144 ... | Poultry and poultry products | 268 | 5,125 | 100 employees. |
| 5141 ... | Groceries, general line | 238 | 5,363 | 100 employees. |
| 5812 ... | Eating places | 156 | 5,519 | $5,000,000. |
| 2038 ... | Frozen specialities, nec | 139 | 5,658 | 500 employees. |
| 5142 ... | Packaged frozen foods | 130 | 5,788 | 100 employees. |
| 5411 ... | Grocery stores | 95 | 5,883 | $20,000,000. |
| 5149 ... | Groceries and related products, nec | 65 | 5,948 | 100 employees. |
| 9999 ... | Not applicable | 63 | 6,011 | |
| 2032 ... | Canned specialities | 61 | 6,072 | 1,000 employees. |
| 2099 ... | Food preparations, nec | 55 | 6,127 | 500 employees. |
| Other | All other SIC codes | 288 | 6,415 | |

Note: The Enhanced Economic Analysis Database uses the number of active establishments as of August, 1994 and identified 6,415 establishments as active official establishments. Of these 6,415, a total of 229 were identified as cold storage/ID warehouses, universities or churches. From the 6,415 total, 6,186 federal establishments were classified as processing, slaughter or combination operations. nec—(Not Elsewhere Classified).

The final rule provides for sequencing HACCP implementation by establishment size, using the SBA definition of a small manufacturing business, i.e., a small business is an establishment with fewer than 500 employees. Those establishments with 500 or more employees will be referred to as large establishments. In addition, in response to comments that there are hundreds of ''very small'' or ''micro'' establishments, the Agency will classify an establishment as ''very small'' if it has either fewer than 10 employees or annual sales of less than $2.5 million.

This sequencing of HACCP responds to a large number of comments requesting that small businesses be given a longer period of time to implement HACCP requirements. Many small businesses stated they did not want to be exempt, but asked for more flexibility in implementing HACCP. Some commenters specifically requested five, eight or 10 years to implement HACCP.

While the final rule does not provide for longer periods of five, eight or 10 years, it does substantially extend the implementation period for hundreds of small and very small establishments.

To illustrate, the proposed rule would have required HACCP plans in over 2,100 establishments producing raw ground product within 12 months. Under the final rule, over 1,800 of those establishments will have either 30 or 42 months to implement HACCP. The smallest 5,127 establishments (2,893 state and 2,234 federal) will have an additional six months. The proposed rule called for implementation of a HACCP system in all ''small'' establishments by 36 months; the final rule allows 42 months for the newly defined ''very small'' category.

Table 8 illustrates the distribution of 6,186 federally-inspected slaughter, processing, and combination establishments used for the sequencing of HACCP implementation in the proposed rule and in the final rule. There are 496 more establishments in the two smaller categories than there were in the proposal. As shown in Table 8, there are 353 large, 2,941 small and 2,892 very small federally-inspected establishments.

TABLE 8.—SIZE CATEGORIES FOR FEDERALLY INSPECTED ESTABLISHMENTS

| Establishment category | Definition | No. of establishments |
|---|---|---|
| **Proposed Rule** | | |
| High volume | >$50 million | 849 |
| Medium volume | $2.5–$50 million. | 3,103 |
| Low volume | <$2.5 million. | 2,234 |
| Total | | 6,186 |

TABLE 8.—SIZE CATEGORIES FOR FEDERALLY INSPECTED ESTABLISHMENTS—Continued

| Establishment category | Definition | No. of establishments |
|---|---|---|
| **Final Rule (Sequencing of HACCP)** | | |
| Large | ≥500 Employees. | 353 |
| Small [a] | 10–499 Employees. | 2,941 |
| Very small [b] | <10 Employees or <$2.5 Million. | 2,892 |
| Total | | 6,186 |

[a] New definition of small includes 2,445 establishments that were medium volume establishments plus 496 that were high volume for the preliminary analysis.

[b] New definition of very small includes the 2,234 establishments that were low volume establishments plus 658 that were medium volume establishments for the preliminary analysis.

*D. Final Cost Estimates*

1. Sanitation Standard Operating Procedures

a. Summary of Requirements. The final rule requires that all inspected establishments develop and implement Sanitation SOP's within 6 months after publication of the final rule. The proposed rule would have required the implementation of SOP's within 90

days. To facilitate the development of SOP's and to provide maximum flexibility, the Agency will not prescribe any specific format or content but will provide guidelines to assist inspected establishments in developing written SOP's. There will not be any FSIS approval of the written documents. With the exception of the implementation schedule, the requirements for SOP's in the final rule are the same as those in the proposed rule.

b. Review of Preliminary Cost Estimates. The preliminary cost analysis identified separate costs for SOP plan development and SOP recordkeeping where recordkeeping was defined as observing or verifying procedures, recording findings, reviewing records and maintaining files. FSIS assumed that the Sanitation SOP's would be developed by a quality control manager at a cost of $25.60 per hour. FSIS estimated that it would cost an average of $128, $256 and $640 for low, medium and high volume establishments to develop Sanitation SOP's.

The preliminary cost analysis assumed that Sanitation SOP's observation and recording for low, medium and high volume establishments would take 15, 25 and 45 minutes per day by an employee earning $12.87 per hour and that supervisory review of records would take 5, 10, and 20 minutes by an employee earning $18.13 per hour. In developing these time estimates for recording and reviewing records, FSIS recognized that the time required would be influenced by a number of factors including the physical size of the establishment, the volume of production, the type of production practices and the number of production lines. The estimates are based on program judgement of the time required to conduct two sets of sanitation observations per day, one for preoperational sanitation procedures and one for operational sanitation.

Using the above inputs, the annual costs for recording and reviewing Sanitation SOP's records for low, medium and high volume establishments would be approximately $1,230, $2,180 and $4,080, respectively, based on a 260-day, 2,080 hour work year. These costs were adjusted upward to approximately $1,242, $2,204 and $4,104 to account for the cost of maintaining records.

The preliminary analysis also included training costs of $62, $155 and $372 for low, medium and high volume establishments. Instructing an employee in verification and recording procedures was assumed to take 2, 5 and 12 hours, respectively involving both a QC technician ($18.13 per hour) and a production worker ($12.87 per hour). Total training cost was, therefore, $31 per hour. Total per establishment Sanitation SOP's costs, as estimated in the preliminary analysis, are summarized in Table 9.

TABLE 9.—SUMMARY OF SANITATION SOP COSTS PER ESTABLISHMENT

[Dollars]

| Establishment category | Plan development cost | Annual recordkeeping cost | Training cost | Total first year cost | Recurring annual cost |
|---|---|---|---|---|---|
| Low | 128 | 1,242 | 62 | 1,432 | 1,242 |
| Medium | 256 | 2,204 | 155 | 2,615 | 2,204 |
| High | 640 | 4,104 | 372 | 5,116 | 4,104 |

Using the per establishment costs from Table 9, total aggregate costs were calculated for all inspected establishments as shown in Table 10. Establishments with an existing written sanitation program were assumed to have only 50 percent of the plan development costs because these establishments would have to modify an existing plan rather than start from the beginning. Establishments with existing sanitation plans include the 287 establishments with TQC programs and 46 slaughter establishments with PQC sanitation programs. It was also assumed that these 333 establishments would not require training to implement a sanitation SOP.

TABLE 10.—COSTS OF SANITATION SOP'S

[Dollars in thousands]

| Establishment category | No. of establishments | First year costs | Recurring costs |
|---|---|---|---|
| High | 849 | $4,276 | $3,484 |
| Medium | 3,103 | 8,079 | 6,839 |

TABLE 10.—COSTS OF SANITATION SOP'S—Continued

[Dollars in thousands]

| Establishment category | No. of establishments | First year costs | Recurring costs |
|---|---|---|---|
| Low | 2,234 | 3,185 | 2,775 |
| Subtotal | 6,186 | 15,540 | 13,098 |
| State | 2,893 | 4,143 | 3,593 |
| Total | 9,079 | 19,683 | 16,691 |

Note: For preliminary RIA, all State establishments were assumed to be low volume establishments.

c. Comments on Preliminary RIA. Comments on proposed requirements for sanitation Standard Operating Procedures (Sanitation SOP's) focused on the cost of recordkeeping. In the preliminary cost analysis, recordkeeping included observation (i.e., verifying the procedures), recording findings, supervisory review of records and maintenance of files. One commenter stated that the cost of recordkeeping for their company would be approximately $10,000 annually.

A state inspected establishment, currently participating as a pilot establishment for HACCP/sanitation plans in their state program, indicated that they spend several hours each week verifying procedures and have weekly costs of at least $50 to keep the paperwork for their sanitation plan current. Their annual cost for keeping paperwork current would, therefore, be at least $2,600. This state establishment also stated that they had used an estimated $3,000 to $4,000 designing an SOP and that was with the assistance of two universities, several suppliers and their state inspection program. It took nine months to put the plan together.

Comments at public hearings indicate that there is a lot of uncertainty as to what FSIS expects in Sanitation SOP's. At one of the public hearings the owner of a ''small'' establishment stressed the importance of guidance and training with respect to what is expected in terms of recordkeeping.

d. Response to Comments.

The Agency recognizes that the costs reported by the state establishment participating in a pilot program are substantially higher than the costs used in the preliminary analysis. The reported development time of nine months is also longer than the allowed implementation period. FSIS believes that the reported pilot project involving two universities, several suppliers and a state program has far exceeded the expectations of the rule. The same is true for the comment suggesting recordkeeping costs of $10,000 per year.

FSIS has now developed model Sanitation SOP's and a guideline for developing Sanitation SOP's. These documents should clarify FSIS expectations. FSIS believes that these documents are consistent with the cost estimates used in the preliminary analysis.

There is some reason to believe that the estimated cost for Sanitation SOP's in the preliminary analysis is conservative, that is, a possible overstatement of costs. Whether the costs associated with Sanitation SOP's are totally new or just how they may be modified over time can only be determined in individual establishment situations. For example, task verification and recordkeeping are costs that can be reduced through efficient management and allocation of resources and should decrease with experience. In many cases the tasks can be integrated with current duties.

For many establishments, the cost of Sanitation SOP's should be offset by changes in the approach to sanitation. Under current procedures, slaughter operations can not begin until inspection personnel have given their approval. Under the new procedures all establishments will be able to commence daily operations without USDA approval upon successful completion of the preoperational portion of their Sanitation SOP. When operational sanitation problems are identified, corrected and documented as they occur by the establishment, establishment officials will spend less time interacting with inspectors or responding to inspection findings. For example, federally inspected establishments currently provide written responses to approximately 700,000 to 800,000 Processing Deficiency Records (PDRs) per year. Over 70 percent of these PDRs are for sanitation deficiencies.

Finally, while FSIS recognizes that keeping sanitation records will be a new task, FSIS does not necessarily view the time spent verifying sanitation procedures as a new regulatory cost. FSIS is not changing any sanitation requirements. It is also true that FSIS has had an ongoing problem getting all establishments to comply with existing sanitation requirements. It can, therefore, be argued that some establishments have not conducted the necessary verification to assure compliance with existing regulations or have used FSIS employees to conduct sanitation verification.

e. Final Cost Estimates. After considering the comments, FSIS does not see a need to adjust the cost estimates shown in Tables 9 and 10. The final aggregate cost estimates for SOP's are those shown in Table 10. The costs in Table 10 assume that the requirement for SOP's does not lead to new compliance costs associated with new regulatory obligations apart from paperwork and recordkeeping. The analysis assumes that satisfactory sanitation is achieved one way or another under current procedures and that the changes that will occur with SOP's have more to do with issues of responsibility and efficient use of inspection resources. It follows that, for the most part, this provision of the rule will have no direct effect on the rate, extent or severity of pathogenic contamination, and thus will also have no effect on the rate, extent, or severity of foodborne illness. This is not saying there will be no change in establishment or employee conduct. In fact, FSIS expects to see more sanitation activities conducted at the firm's initiative rather than following inspection findings.

2. Costs of Meeting Pathogen Reduction and Microbial Sampling Requirements

a. Summary of Requirements. The final rule implementing HACCP-based programs establishes pathogen reduction performance standards for *Salmonella.* The rule both establishes the standards and defines the procedures the Agency will use to measure and assure compliance with the standards. The rule does not specify a minimum testing requirement for *Salmonella.* The pathogen reduction performance standards apply to an estimated 5,522 inspected establishments, 2,682 establishments that slaughter cattle, hogs, chicken or turkeys and another 2,840 establishments that do not slaughter, but produce raw ground product from beef, pork, chicken or turkey. If an establishment slaughters two species, e.g. cattle and hogs, the establishment would be subject to the standards for both cattle and hogs. The Agency's testing program would, however, be directed at the predominant species. If an establishment both slaughters and processes a raw ground product from that same species, the Agency will test the ground product. If an establishment produces more than one variety of ground product, the Agency intends to sample each.

The proposed rule included the same standards but contained a different approach for enforcement. The proposed rule included the requirement that each of the 5,522 affected establishments would collect and analyze one sample for each species or variety of raw ground product for *Salmonella* on a daily basis. The establishments would maintain records from these tests that would be reviewed by inspection program personnel to determine compliance. The proposed rule did not include a discussion of how the Agency would use the test results in a program for regulatory enforcement.

Under the proposal, the results from each establishment's *Salmonella* testing program were also to be used as a measure of process control. This final rule requires that all 2,682 slaughter establishments implement sampling programs using generic *E. coli* as a measure of process control for slaughter and sanitary dressing procedures.

b. Review of Preliminary Cost Estimates. As discussed earlier under methodology, the preliminary RIA did not attempt to analyze the overall impact of complying with the new pathogen reduction standards. The preliminary RIA did include a detailed analysis of the costs associated with the requirement that slaughter and raw ground processing establishments collect and analyze samples for *Salmonella* on a daily basis. The laboratory analysis required only a positive-negative finding, i.e., the proposed rule did not require the analysis necessary to determine the number of bacteria present in the sample. The cost of meeting the proposed requirement would vary depending on whether or not the establishment had an inhouse laboratory. It was assumed that approximately 20 percent of samples would be collected in establishments with in-house laboratories. For an establishment without a laboratory the total cost for each sample was estimated as shown in Table 11.

TABLE 11.—COST OF A SALMONELLA SAMPLE ANALYSIS FOR ESTABLISHMENTS WITH NO IN-HOUSE LABORATORY

(Dollars)

| Component | Cost |
|---|---|
| Average Private Laboratory Cost ..... | 22.60 |
| Shipping ..... | 7.00 |

TABLE 11.—COST OF A SALMONELLA SAMPLE ANALYSIS FOR ESTABLISHMENTS WITH NO IN-HOUSE LABORATORY—Continued

(Dollars)

| Component | Cost |
|---|---|
| Collecting and Packaging | 3.75 |
| Total | 33.35 |

The establishment without an in-house laboratory would also be required to train an individual to perform aseptic sampling. The cost components for a *Salmonella* test at an in-house laboratory were estimated for the preliminary RIA as shown in Table 12.

TABLE 12.—COST OF A SALMONELLA SAMPLE ANALYSIS FOR ESTABLISHMENTS WITH AN IN-HOUSE LABORATORY

[Dollars]

| Component | Cost |
|---|---|
| Laboratory Supplies | 5.90 |
| Collecting and Preparing Sample | 5.28 |
| Laboratory Analysis (0.5 hours at $18.13 per hour) | 9.07 |
| Total | 20.25 |

Since the requirements in the final rule have changed substantially, this section will present only a brief summary of what was a relatively complex analysis to estimate the total industry sampling costs associated with the proposed requirements. The costs associated with the proposed *Salmonella* testing requirement are summarized in Tables 13 and 14. Table 13 shows the different cost components.

TABLE 13.—COMPONENT COSTS FOR MICROBIAL SAMPLING AS PROPOSED

[$ Thousands]

| Establishment category | Training for aseptic sampling | Sampling plan development | Sample collection and analysis | Recording and review time |
|---|---|---|---|---|
| High | 10 | 508 | 5,267 | 242 |
| Medium | 514 | 1,473 | 20,555 | 887 |
| Low | 604 | 959 | 18,624 | 606 |
| Subtotal | 1,128 | 2,939 | 44,446 | 1,735 |
| State | 998 | 1,588 | 21,150 | 688 |
| Total | 2,126 | 4,527 | 65,597 | 2,423 |

TABLE 14.—AGGREGATE COSTS OF MICROBIAL SAMPLING AS PROPOSED

[$ Thousands]

| Establishment category | Number of raw product operations | First year costs | Recurring costs |
|---|---|---|---|
| High | 793 | 6,027 | 5,509 |
| Medium | 2,301 | 23,429 | 21,443 |
| Low | 1,498 | 20,792 | 19,230 |
| Subtotal | 4,592 | 50,248 | 46,181 |
| State | 2,481 | 24,424 | 21,838 |
| Total | 7,073 | 74,672 | 68,020 |

Note: All state establishments were assumed to be low volume producers. Columns may not add to totals due to rounding.

Table 14 summarizes the first year and annual recurring costs. Training and sampling plan development costs are one-time first year costs. Sample analysis and recording costs are both recurring annual costs. The following notations help characterize the estimated costs from the preliminary analysis:

- Training and plan development costs were based on a total of 7,073 raw product operations. This total is based on a count of meat slaughter, poultry slaughter and raw ground processing operations. Sample collection and analysis and recording and record review costs were based on a count of 8,329 species-specific operations, i.e., the total of beef slaughter, pork slaughter, raw ground processing, etc. Thus, an establishment with beef slaughter, pork slaughter and raw ground processing would count as two operations for training and plan development, but three operations for sampling and recordkeeping.
- The proposed requirement of one sample per day per species resulted in low volume federal establishments and state establishments accounting for over 60 percent of the estimated first year costs (See Table 14).
- The analysis underestimated costs in that with existing data it was necessary to assume that the 3,029 establishments with raw ground product operations produced only one product. The proposal would have required 2 samples per day if an establishment produced both raw ground beef and raw ground pork on a daily basis.
- The analysis overestimated costs in that it counted operations for minor species or kind ( e.g. sheep and goats). The proposal did not cover sheep, goats, equine, ducks, geese, etc.
- The analysis overestimated costs in that it assumed that every establishment

with multiple operations was running each operation every day (260 days per year).

• Each of the 7,073 operations would require a sampling plan—25 hours for a QC manager at $25.60 per hour for a total of $640 per plan. At $640 per plan, 7,073 plans totaled $4.53 million as shown in Table 13.

• The analysis assumed that 5,275 (approximately 75 percent) of the 7,073 operations would have to train an individual to perform aseptic sampling. The total of 5,275 includes all 1,498 low volume raw operations, 1,275 (55.4%) of the 2,301 medium volume raw operations, 25 (3.2%) of the 793 high volume operations and 2,477 (99.8%) of the State inspected raw product operations. Training was estimated at $403 per operation—8 hours with a trainer at $37.50 per hour and a trainee at $12.87 per hour. Training for 5,275 operations at $403 per operation would cost $2.13 million as shown in Table 13.

• Recording and review time was estimated at 5 minutes per day for each of the 8,329 species-specific operations. Five minutes per day equals approximately 21.7 hours per year or an average of approximately $291 per year per operation based on wages of $18.13 and $12.87 per year (average of $13.43). The total is $2.42 million as shown in Table 13. Since the requirement was one sample per day per species, the cost estimates could also be viewed as 5 minutes per sample.

c. Comments on the Preliminary RIA. Similar to the preliminary analysis, the public comments focused on the cost of required *Salmonella* sampling and did not address the overall impact of meeting the proposed pathogen reduction performance standards for *Salmonella.* The proposed regulation would have required daily sampling for each species or kind slaughtered and each type (meat or poultry) of raw ground product per establishment per day. Comments from individual establishments indicated that some small establishments could be required to take 5 or more samples per day. A ''small'' establishment currently slaughtering three different species (beef, swine and lamb) and producing multiple raw ground products estimated they would need approximately 2,200 samples per year at a cost of approximately $77,000 per year. That is over eight per day based on a 260 day work year. A ''small'' ground meat processing establishment estimated they would need over 500 samples from approximately 350,000 pounds of annual production.

Several comments from ''small'' establishments pointed out that the proposed sampling program placed a disproportionate burden on small establishments from two perspectives. First, ''small'' establishments have less production over which to spread the cost of sampling. Second, smaller establishments tend to be the ones that slaughter more species or kind and produce more varieties of raw ground product. Other comments pointed out that the proposed *Salmonella* testing would not provide a good procedure to validate process control.

There were also comments that referred to the cost of the product that is lost or damaged during sample collection. A turkey processor noted that the value of a 40 pound tom is $63.60 at wholesale price. The same comment pointed out that shipping costs could be very high, especially if next day service is required.

Several comments noted that the IFSE study estimated costs for microbiological testing that were far higher than the cost estimates provided by FSIS. Another commenter noted that microbiological testing is being proposed to correct a deficiency of an inspection system that is currently unable to detect microbial contamination of meat. If mandatory inspection is a federally funded program, why not the ''correction'' of the system?

Most of the comments referred to the cost of the proposed requirement and were not comments on the methodology used to determine costs in the preliminary analysis. One comment that did address the cost methodology had calculated the cost of a *Salmonella* test at $38.00 to $44.50 per test where FSIS used a cost of approximately $33.00 to $34.00. There was some confusion concerning the proposed requirements. Some comments indicated the establishments believed that they would have to test every product line. Other comments based estimates on a far costlier test for *Salmonella* indicating they assumed the test would require information concerning the number of bacteria present, not just a positive-negative result.

There were also comments that suggested that FSIS has overestimated the cost of microbial sampling because, as the amount of laboratory analysis increases, the cost per sample will probably decrease. Other commenters pointed out that demand will lead to simpler and less costly new methods development.

d. Response to Comments. The changes in the final rule eliminate the issues raised by most of the comments. The comments concerning the burden on ''small'' establishments made a convincing argument that ''small'' establishments could not afford to implement the microbial sampling program as proposed. The final rule does not include a minimum testing requirement for *Salmonella.* Each individual establishment can conduct the level of testing they deem necessary to provide assurance that they are meeting the pathogen reduction performance standards for *Salmonella.*

The Agency agrees with public comments and conclusions reached at technical conferences that the proposed *Salmonella* testing would not have provided a good measure of process control. The final rule requires that all slaughter establishments implement testing programs using generic *E. coli* to validate control of slaughter and sanitary dressing procedures. After reviewing all public comments and other materials made available during the comment period, FSIS concluded that using generic *E. coli* is more practical. Generic *E. coli* is generally present in the feces of mammals and birds and is, therefore, an excellent indicator of fecal contamination. It has a higher frequency than *Salmonella* and can be tested and quantified relatively less expensively and, therefore, provides a more efficient measure of control of slaughter and sanitary dressing procedures. Testing for generic *E. coli* is also easier for in-house establishment laboratories.

By basing *E. coli* sampling programs on production volume, the Agency is responding to small establishment concerns over equity of the regulatory burden. In addition, establishments with very low production will be required to conduct sampling for only a limited time period each year. Sampling will only be required for slaughter establishments. Establishments slaughtering more than one kind of poultry or species of livestock will be required to sample only the kind or species representing the most production. There will also be provisions for decreasing the number of samples after implementation of HACCP plans and provisions for using alternative generic *E. coli* sampling programs in cases where the establishment can present data demonstrating control of slaughter and sanitary dressing procedures.

The comments referring to the value of lost product identified a cost that was not addressed in the preliminary analysis. Such costs will not be a factor for the final rule because beef and pork samples collected by FSIS will use the wet sponge swab technique and poultry samples will be collected using a whole

bird rinse. In both cases, no product will be damaged or lost.

With respect to comments referring to high microbial sampling costs identified by the IFSE study, FSIS notes that the Agency's preliminary cost estimates were based on the proposed regulatory requirement of one test per species (carcass or raw ground product) per day for *Salmonella.* The IFSE study based their per establishment costs on a microbiological testing program currently being used in a beef slaughter establishment. The cost estimates generated by the IFSE study were not related to the testing program outlined in the proposed rule.

The comments were correct that FSIS based the preliminary cost analysis on existing laboratory methods and on current laboratory cost estimates. The comments suggesting less expensive methods are only speculative. There is no way to estimate potential new methods. While there is no way to predict the effect of increased demand on costs, it seems reasonable to expect that, in the long run, laboratory analysis costs per sample will go down as more firms implement microbial sampling programs. FSIS notes that short run costs could actually increase as demand goes up faster than the supply of laboratory capability. In the long run, however, establishments should benefit from quantity discounts and lower fixed costs per sample as the total number of analyses increases.

e. Final Cost Estimates. The final rule requires that all establishments slaughtering cattle, hogs, chickens or turkeys or producing a raw ground product from these species or kind meet a new pathogen reduction performance standard for *Salmonella.* This requirement applies to an estimated 5,522 establishments as shown in Table 15. Because the standard has been established using the baseline studies that estimate a national prevalence by carcass, the Agency does not have an estimate for the number of establishments that are currently meeting the standard. The baseline studies do not provide data on how pathogen levels vary between establishments and include data from only the larger establishments that represent most of the production.

TABLE 15.—ESTABLISHMENTS AFFECTED BY THE PATHOGEN REDUCTION PERFORMANCE STANDARD

| Category | Very small | Small | Large | Total |
|---|---|---|---|---|
| Cattle and hog slaughter | 1,876 | 376 | 66 | 2,318 |
| Poultry slaughter | 100 | 121 | 143 | 364 |
| Raw ground processing | 1,413 | 1,358 | 69 | 2,840 |
| Total | 3,389 | 1,855 | 278 | 5,522 |

This analysis of how the *Salmonella* standards will impact the 5,522 establishments will, by necessity, be primarily a qualitative discussion. The analysis will, however, develop two scenarios that can be used to present a range of potential impacts.

Since the focus of this rule is about reducing pathogens in or on raw meat and poultry products, it is anticipated that the potential costs are greatest for those slaughter establishments that are currently not meeting the new pathogen reduction performance standards. For slaughter establishments, the potential costs take one of two forms.

First, even though the rule does not require establishments to test for *Salmonella*, the Agency recognizes that some establishments may conduct their own *Salmonella* testing programs to avoid failing a series of tests conducted by the Agency. Thus, it can be argued that the Agency's intent to implement establishment specific testing for *Salmonella* is indirectly requiring the industry to routinely monitor their *Salmonella* levels to assure they will be in compliance.

The manner in which FSIS will implement its *Salmonella* testing program should help keep establishment costs down. During the first phase, referred to as pre-implementation testing, FSIS will test product from each slaughter or raw ground operation and share those results with the establishment. Thus, before FSIS begins the actual enforcement of the *Salmonella* performance standards, the Agency will provide each establishment with a status report on *Salmonella* incidence. This pre-implementation testing will precede HACCP implementation, which occurs from 18 to 42 months after publication of the final rule. The pre-implementation results will assist the establishments in preparing for implementation of HACCP and the pathogen reduction performance standards. Establishments with low incidence of *Salmonella* will have some level of assurance that they are already meeting the new *Salmonella* standards.

The second type of potential cost relates to the question of whether firms will have to make permanent changes in their processing or production practices in order to comply with the pathogen reduction performance standards for *Salmonella.* Reducing pathogens for slaughter establishments involves either modifying the incoming animals or birds, improving the dressing procedures so as to reduce contamination during procedures such as hide removal and evisceration, or using interventions such as antimicrobial treatments to kill or remove the pathogens following contamination. For many establishments, the process of implementing HACCP programs may, by itself, improve the dressing procedures sufficiently to meet the new standard. Other establishments may have to choose between slowing production lines, modifying some attribute of their incoming live animals or birds, or adding post-dressing interventions such as the new steam vacuum process or antimicrobial rinses.

This analysis will examine the two types of costs for the three industry segments of poultry slaughter, meat slaughter and raw ground processing. The analysis develops two cost scenarios to estimate the impact of the new pathogen reduction standards for *Salmonella.* As discussed earlier, the Agency does not have an estimate for the number of establishments that are currently meeting the standards.

The two cost scenarios are based on three general premises. The first premise is that a certain portion of large establishments will take whatever action is necessary to provide assurance that they are meeting all regulatory requirements. The second premise is that the establishments that are typically having problems controlling operations today will also have problems meeting the *Salmonella* standards. The low cost scenario is based on these first two premises. FSIS has historically found serious control problems in from 5 to 10

percent of establishments. The recent 1,000 establishment review found serious control problems in 8.9 percent of 358 randomly selected establishments. The 1993 review of establishments with the New Turkey Inspection System found 3 of 26 establishments with problems with product ready for shipment. A 1991–1992 survey of poultry reprocessing found that while only 2 percent of poultry is reprocessed off-line, from 5 to 10 percent of the establishments had very high reprocessing rates.

The high cost scenario is based on a third premise that (1) approximately half of the affected establishments are currently not meeting the standards and that (2) most large establishments and the majority of smaller establishments will take some action to assure compliance with the *Salmonella* standards.

As shown in Table 15, there are 2,318 cattle or swine slaughter establishments that must meet the pathogen reduction performance standards for *Salmonella*. The Agency does not have information that would indicate that *Salmonella* testing is routinely conducted by a major segment of the beef or pork industry. The baseline studies have shown a one percent positive rate for steers and heifers and a 2.7 percent positive rate for cows and bulls. In addition, the Agency does not know how, or if, beef and pork establishments would respond to the Agency's *Salmonella* testing initiative. Given the relatively low levels of *Salmonella*, most establishments will probably choose to depend on the assurance provided by a validated, well functioning HACCP program.

To develop a low cost scenario, the Agency assumes that the 66 large establishments would initiate daily testing using in-house laboratories ($20.25 per analysis—$347,490 per year) and that half of the 376 small establishments would conduct weekly testing at outside laboratories ($33.35 per analysis—$326,030 per year). Under a high cost scenario, the large establishments would conduct 8 tests per day ($2.78 million per year), the small establishments would all conduct one test per week ($652,059 per year) and half (938) of the very small establishments would conduct a test each month ($375,388 per year). The low and high *Salmonella* sampling costs for cattle and hog slaughter operations are summarized in Tables 16 and 17, respectively.

Beyond testing, there is the issue of whether the required actions of developing and implementing process control procedures will, by themselves, be sufficient to meet the *Salmonella* standards or whether changes in processing methods will also be required. FSIS recognizes that beef and pork dressing procedures involve a lot of manual steps and, therefore, it is reasonable to assume that substantial pathogen reduction can be accomplished through training and careful monitoring of the dressing procedures. This is especially true for the low volume establishments that do not have automated lines and use what is known as the ''bed kill'' dressing process.

For slaughter establishments that do have to make process modifications, there are several options available. First, FSIS is aware of establishments that are testing live animal washing systems. Second, the preliminary analysis included estimates for the cost of using different antimicrobial treatments for varying sizes of cattle or hog slaughter establishments. The lowest cost option was a hot water spray system with no cabinet. The cost for that system was estimated at $.08 per carcass or approximately $8.78 million annually for all cattle and hog establishments. In contrast, a pre-evisceration acid spray system with both a pre-wash spray cabinet and a sanitizing cabinet was estimated at $.79 per carcass for a low volume establishment. A TSP system for cattle was estimated at $.85 per carcass for a low volume establishment.

The preliminary analysis noted that 23 establishments were already using acetic or lactic acid sprays on carcasses either before or after evisceration. Other establishments had requested approval for citric acid, TSP, or hot water.

Third, FSIS has now approved the new steam vacuum systems for beef and pork operations. The installation of a steam vacuum system is estimated at $10,000 per establishment, with expectations that increased use will result in lower prices. Annual increased utility costs to run a steam vacuum system are estimated at $4,000. Maintenance cost is estimated at 5 percent or $500 per year.

For a low cost option, it is assumed that 10 percent of the large establishments must install a steam vacuum system to meet the new requirements and that half of 376 small establishments must use a hot water rinse at $.08 per carcass. The initial costs for the steam systems would be $70,000. Annual operating costs would be $31,500. Annual operating costs for hot water rinses on half the small establishment production would be $915,000.

Under a high cost option, it is assumed that half (33) of the large establishments would have to install steam systems and that all small and very small establishments would use hot water rinses. The initial cost for steam systems would be $330,000. Annual operating costs would be $148,500. Annual costs for hot water rinses would be $2,075,387. The low and high process modification costs for cattle and hog slaughter operations are summarized in Tables 16 and 17, respectively.

As shown in Table 15, there are an estimated 2,840 establishments that produce raw ground products using ingredients from other establishments. These establishments do not have the same opportunities to reduce *Salmonella* levels as do slaughter establishments. They can control growth by avoiding temperature abuse and can limit cross-contamination, but basically they must depend on the *Salmonella* levels of their incoming product in order to meet the performance standards. These establishments may choose to test incoming product in order to eliminate suppliers whose product is found to be positive. Larger establishments that are important customers of other suppliers may choose to include pathogen requirements in their purchase specifications.

For a low cost scenario, this analysis assumes that the 69 large firms would analyze one sample per day using in-house laboratories ($20.25 per analysis) and that 10 percent (136) of the small firms would test one sample per week using an outside laboratory ($33.35 per analysis). Under a high cost scenario, this analysis assumes that half (679) of the small firms would test one sample per week and that the large firms would double their sampling. Under each scenario, it is assumed that the large establishments would begin testing 12 months after publication and the small establishments 24 months after publication. These starting dates correspond with the end of the Agency's pre-implementation testing. The low and high *Salmonella* sampling costs for raw ground processors are summarized in Tables 16 and 17, respectively.

As shown in Table 15, there are 364 poultry slaughter operations that will be required to meet the new pathogen reduction performance standards for *Salmonella*. FSIS believes that almost all of the larger establishments in the poultry industry currently conduct routine or periodic analyses for *Salmonella* and will use their ongoing testing programs to (1) establish and validate their HACCP controls to assure they will initially comply with the new pathogen reduction performance

standard, and (2) periodically verify continuing compliance. Therefore, the costs for additional *Salmonella* testing in the poultry industry will be minimal.

For cattle and hog operations, this analysis used the cost of antimicrobials from the preliminary analysis in estimating possible process modification costs. In contrast, for the poultry industry, meeting the pathogen reduction performance standards is clearly not analogous to meeting the proposed antimicrobial requirement. The preliminary analysis assumed that 90 percent of all high volume poultry processors and 70 percent of all low or medium volume processors already meet that proposed requirement.

FSIS recognizes that many poultry establishments may have to modify existing procedures to meet the new standards for *Salmonella*. Where cattle and hog dressing operations still include many manual procedures that can be easily controlled by improved training and monitoring, the poultry slaughter industry is highly automated, increasing the probability that process control may require modifications of equipment, facilities, or incoming product. However, because there is extensive vertical integration in the poultry industry, many firms have the added option of controlling *Salmonella* in the live birds. There is evidence that controlling *Salmonella* in feed and controlling rodents in poultry houses can have a substantial impact on the level of *Salmonella* in birds entering the slaughter facility.

In the late 1980's, FSIS tested some alternative processing methods at an establishment in Puerto Rico. Two methods included a counterflow scalder and a hot rinse immediately following the scald tank. At the time, FSIS recognized that it may be expensive to retrofit an existing establishment with a counterflow scalder because of the physical space and plumbing required.

Recognizing that other options are available, this analysis develops potential cost estimates based on the addition of TSP rinses. TSP rinse systems for the poultry industry are relatively expensive. It is currently estimated that a TSP installation would cost $40,000 per line with an operating cost of $0.003 per broiler or $0.014 per turkey.

As a low cost option, FSIS assumes that 36 large poultry establishments (27 broiler and 9 turkey establishments) will add TSP systems. Average broiler production is estimated at 35 million and average turkey production at 6 million. Annual average operating cost are, therefore, $105,000 for a chicken slaughter operation and $84,000 for a turkey slaughter operation. Each large poultry establishment is assumed to have 2 lines. Small establishments were assumed to average 1.5 lines.

As a high cost option, FSIS assumes that 182 (100 large and 82 small) poultry establishments will have to add TSP systems to meet the new requirements. The 182 establishments include 136 chicken and 46 turkey slaughter establishments. The total low cost scenario for poultry slaughter operations is summarized in Table 16. The high cost scenario is summarized in Table 17.

TABLE 16.—SALMONELLA TESTING AND PROCESS MODIFICATION COSTS

[Low Cost Scenario—$000]

| Industry sector cost category | Year 1 | Year 2 | Year 3 | Year 4 | Year 5+ |
|---|---|---|---|---|---|
| Sampling by Raw Ground Processors | 0 | 363 | 599 | 599 | 599 |
| Process Changes for Cattle and Hog Slaughter Operations | 0 | 86 | 489 | 947 | 947 |
| Sampling by Cattle and Hog Slaughter Operations | 0 | 347 | 674 | 674 | 674 |
| Process changes for poultry slaughter operations | 0 | 4,676 | 3,591 | 3,591 | 3,591 |
| Total | 0 | 5,472 | 5,353 | 5,811 | 5,811 |

TABLE 17.— SALMONELLA TESTING AND PROCESS MODIFICATION COSTS

[High Cost Scenario—$000]

| Industry sector cost category | Year 1 | Year 2 | Year 3 | Year 4 | Year 5+ |
|---|---|---|---|---|---|
| Sampling by raw ground processors | 0 | $727 | $1,904 | $1,904 | $1,904 |
| Process changes for cattle and hog slaughter operations | 0 | 404 | 1,063 | 2,101 | 2,224 |
| Sampling by cattle and hog slaughter operations | 0 | 2,780 | 3,807 | 3,807 | 3,807 |
| Process Changes for Poultry Slaughter Operations | 0 | 12,988 | 18,979 | 18,144 | 18,144 |
| Total | 0 | 16,899 | 25,753 | 25,956 | 26,079 |

After the initial implementation years, the annual cost for all three industry sectors is approximately $5.8 million for the low cost scenario. Under the high cost scenario, the total recurring industry cost of meeting the new performance standards is $26.1 million per year.

The high and low cost scenarios have addressed the potential costs of process modification when establishments find they are not meeting critical limits set to assure compliance with the new pathogen reduction standards for *Salmonella*. While the scenarios have addressed permanent process modifications, it is also reasonable to assume that meeting the *Salmonella* standards would involve some day-to-day process adjustments, i.e., corrective actions that do not involve adding new procedures or new equipment. One example would be the decision to reduce line speeds on a day when the incoming live animals are particularly dirty. The Agency believes that many establishments already take this type of precautionary action.

Under HACCP, there will presumably also be some costs associated with corrective actions related to critical limits set for the purpose of meeting existing regulatory limits. As discussed earlier under methodology, the preliminary analysis did not include any costs for taking corrective actions when such deviations from critical limits occur. If this rulemaking were implementing a new regulatory program where none had previously existed, one might expect to see establishments experiencing considerable additional costs due to temporary production down-time, the need to rework or condemn product or the need to

investigate the causes of deviations and develop corrective action plans. Meat and poultry inspection is, however, an existing regulatory program with a broad range of requirements that are well understood by the regulated industry and enforced by the daily presence of an inspector. The system already includes procedures whereby establishments are (1) implementing corrective actions for almost a million written Processing Deficiency Records (PDRs) annually, (2) developing written Establishment Improvement Programs (PIPs) when continuing problems with facility maintenance are observed, and (3) developing Corrective Action Plans when establishments experience serious ongoing problems in complying with existing sanitation or other regulatory requirements. In addition, the regulations already include a wide array of time and/or temperature requirements for cooking and chilling processed products. Many of the existing regulations have been developed with the standards of food safety in mind that are represented by critical limits under HACCP.

Within this existing regulatory framework establishments already experience down-time and expend considerable resources discussing causes of problems and plans for preventing future occurrences. Thus, from the perspective of looking at the existing system, FSIS does not envision that establishments will experience a significant increase in the costs of corrective action and believes the new system can help establishments avoid situations that currently cost them resources to correct. FSIS views the new program as a more effective way of assuring that establishments meet already established health and safety related requirements. For example, the requirement that establishments develop and implement sanitation SOPs does not include any change in existing sanitation standards. Under the existing system, FSIS takes responsibility for determining when establishments meet the standard and when they can operate. Under the new program, establishments will have to document their procedures and take responsibility for implementing those procedures before they begin operations. FSIS recognizes that some establishments will have to spend more time cleaning facilities and equipment. Today, many establishments conduct sanitation procedures only after inspection has identified a problem. FSIS does not, however, view such increased costs of sanitation as a cost of this rulemaking. If this rule imposes such additional costs, it is because the HACCP-based program will inherently provide improved enforcement procedures in situations where firms have been substituting the inspector's sanitation review for their own production control.

In summary, under the broader cost category of process modification and corrective action, FSIS has concluded that the cost of this rule is most appropriately addressed under the subject of potential costs associated with meeting the new pathogen reduction standards. The low and high cost scenarios provide the estimates for these potential costs. As will be discussed under the next topic of generic *E. coli* testing, these low and high cost scenarios include the types of actions establishments would take if they were also experiencing continuing difficulty in meeting criteria established for generic *E. coli.*

The final rule also requires that all establishments that slaughter cattle, swine, chickens or turkeys implement testing programs for generic *E. coli* to validate control of slaughter and sanitary dressing procedures. All samples will be analyzed for quantity, i.e., number of bacteria present. These testing programs will use production volume as the basis for determining the frequency at which establishments will conduct testing for generic *E. coli.* The frequencies for *E. coli* testing for each slaughter species are as follows:

cattle—1 test per 300 carcasses
swine—1 test per 1,000 carcasses
chickens—1 test per 22,000 carcasses
turkeys—1 test per 3,000 carcasses

These frequencies were selected so that, in the subgroup of establishments accounting for 99 percent of total production for each species, the 5 percent of establishments with the highest production volume would each have to conduct a minimum of 13 *E. coli* tests, or one test window, each day. With these frequencies, 90 percent of all cattle, 94 percent of all swine, 99 percent of all chicken, and 99 percent of all turkeys will be slaughtered in establishments conducting a minimum of one *E. coli* test per day.

The above frequencies notwithstanding, all slaughter establishments must conduct sampling at a minimum frequency of once per week. Establishments with very low volumes, slaughtering at or below 6,000 cattle, 20,000 swine (or a combination of such livestock not to exceed a total of 20,000, with a minimum of 6,000 cattle), 440,000 chickens, or 60,000 turkeys annually, will only be required to sample once per week until a sampling window has been completed where the results indicate that the slaughter and dressing process is under control. Once these criteria have been met, these establishments will be required to complete a new sampling window once each year, or when a change has been made in the slaughter process or personnel. This cost analysis assumes that the average low volume establishment will have to complete two windows (26 samples) each year before they meet the established criteria, recognizing that some establishments will meet the criteria on their first window and others may require three or more.

The final rule also provides that slaughter establishments operating under a validated HACCP system may use a sampling frequency other than that provided for in the regulation if the alternative sampling frequency is an integral part of the establishment's HACCP verification procedures and if FSIS does not determine, and notify the establishment in writing, that the alternative frequency is inadequate to verify the effectiveness of the establishmen's slaughter and sanitary dressing controls. In addition, the final rule allows an establishment to use an existing generic *E. coli* sampling program if it can provide the data necessary to show that the existing plan is assuring adequate control. This analysis has not attempted to account for alternative sampling frequencies. It is likely that any reduction in generic *E. coli* sampling would be offset by alternative verification procedures.

The estimated component costs for collecting, shipping and analyzing a generic *E. coli* sample at a commercial laboratory are shown in Table 18.

TABLE 18.—COST OF A GENERIC E. COLI SAMPLE ANALYSIS COMMERCIAL LABORATORY

[Dollars]

| Component | Cost |
|---|---|
| Average private laboratory cost | 13.00 |
| Shipping | 7.00 |
| Collecting and packaging | 3.75 |
| Total | 23.75 |

The component costs for collecting and analyzing a generic *E. coli* sample at an FSIS field laboratory are shown in Table 19.

TABLE 19.— COST OF A GENERIC E. COLI SAMPLE ANALYSIS FSIS FIELD LABORATORY

[Dollars]

| Component | Cost |
|---|---|
| Sample collection supplies | 1.45 |
| Sample collection (0.5 hrs/$18.60 per hr) | 9.30 |
| Laboratory supplies | 2.90 |
| Laboratory analysis (0.5 hrs/$18.60 per hr) | 9.30 |
| Total | 22.95 |

Based on the above average cost estimates, this final RIA uses a per sample cost of $24 per analysis, recognizing that establishments with in-house laboratories will be able to conduct sample analysis at lower costs. In using the average cost of $24 per sample, FSIS is providing an upper bound estimate. The corresponding cost per sample for *Salmonella* was $33.35 at a commercial laboratory. Thus, using generic *E. coli* instead of *Salmonella* for process control validation has reduced the per sample cost by approximately 30 percent.

Aggregate annual sampling costs were estimated by applying the sampling frequencies to annual production data recorded by the Animal Disposition Reporting System (ADRS), an existing Agency database. The ADRS includes the total annual production in terms of number of livestock or poultry slaughtered for each federally inspected establishment. Table 20 summarizes estimates for the number of samples that will need to be collected and analyzed each year by the 364 inspected poultry slaughter operations. As shown in Table 20, the 364 establishments will be required to analyze 419,123 samples annually. Table 21 summarizes estimates for the number of samples that will need to be collected and analyzed each year by the 2,318 inspected cattle and swine slaughter operations. As shown in Table 21, the 2,318 establishments will be required to analyze 252,640 samples annually.

The smallest 2,098 slaughter operations (less than 6,000 cattle, 20,000 swine, 60,000 turkeys and 440,000 chickens) will be required to analyze one sample per week until they demonstrate compliance with established criteria. This analysis assumes an average of 26 samples per establishment per year, recognizing that some may need more and others less. These 2,098 smaller slaughter operations (over 78 percent of the total 2,682) will not be required to conduct any further analyses within a given year unless major changes to facilities, equipment or personnel occur.

Tables 20 and 21 were constructed assuming that all establishments operate on a 52 week, 260 day, 40 hours per week, 2,080-hour work-year. As discussed above, this final RIA does not attempt to account for possible reductions in sampling frequency in establishments where the establishment can demonstrate an existing acceptable alternative program or where alternative frequencies are an integral part of successful HACCP verification procedures.

Tables 20 and 21 incorporate data from the preliminary analysis showing that there are 1,328 state-inspected slaughter establishments, with an estimated 1,270 slaughtering cattle or swine and 58 slaughtering poultry. Based on additional data collected in July 1995, FSIS anticipates that 50 of the state-inspected cattle or swine slaughtering establishments will exceed the limits of 6,000 cattle or 20,000 hogs and will be required to conduct a minimum of one sample per week on an ongoing basis. It is further assumed that none of these establishments will have to conduct more than one per week, i.e., cattle slaughter is under 15,600 (300×52) and swine slaughter is under 52,000 (52×1,000). The other 1,220 state-inspected cattle or swine establishments would average 26 samples per year (2 windows). The July 1995 data indicate that all 58 state-inspected establishments slaughtering poultry process fewer than 60,000 turkeys and 440,000 chickens annually.

TABLE 20.—REQUIRED E. COLI SAMPLING FOR POULTRY SLAUGHTER ESTABLISHMENTS

| Annual slaughter production category | Number establishments | Sampling range per day | Average sampling rate per establishment | Annual samples |
|---|---|---|---|---|
| Chickens over 45.8 million | 60 | Over 8 per day | 10.9 Per Day | 170,300 |
| Chickens 5.72 to 45.8 million | 125 | 1–8 per day | 4.7 per day | 152,230 |
| Chickens 440,000 to 5,720,000 | 23 | 1 per week-1 per day | 1.9 per week | 2,215 |
| Turkeys over 6.24 million | 18 | Over 8 per day | 12.7 per day | 59,540 |
| Turkeys 780,000 to 6,240,000 | 25 | 1–8 per day | 4.8 per day | 31,330 |
| Turkeys 60,000 to 780,000 | 5 | 1 per week-1 per day | 2.7 per week | 700 |
| Chickens under 440,000 and Turkeys under 60,000 | 108 | NA | One per week (26 weeks) | 2,808 |
| Total | 364 | NA | NA | 419,123 |

NA—Not applicable.

TABLE 21.— REQUIRED GENERIC E. COLI SAMPLING FOR SWINE AND CATTLE SLAUGHTER ESTABLISHMENTS

| Annual slaughter production category | Number of establishments | Sampling range | Average sampling rate per establishment | Annual samples |
|---|---|---|---|---|
| Cattle over 780,000 | 16 | 10 or more per day | 14.8 per day | 61,750 |
| Cattle between 78,000 and 780,000 | 50 | 1–10 per day | 3.2 Per Day | 41,340 |
| Hogs over 2,080,000 | 17 | 8 or more per day | 11.6 per day | 51,090 |
| Hogs between 260,000 and 2,080,000 | 29 | 1–8 per day | 4.0 Per Day | 30,290 |
| Cattle between 6,000 and 78,000 and/or hogs between 20,000 and 260,000. | 216 | One per week—one per day. | 1.5 per week | 16,430 |
| Under 6,000 cattle and under 20,000 Hogs | 1,990 | NA | One per week (26 weeks) | 51,740 |
| Total | 2,318 | NA | NA | 252,640 |

NA—Not applicable.

The total costs for meeting the final requirements for generic *E. coli* sampling in poultry and livestock slaughter establishments are summarized in Tables 22 and 23. These tables use the same cost estimates as the preliminary analysis for requirements such as plan development, training and recording and reviewing analytical results. Plan development is $640 per plan. The preliminary analysis assumed that 75 percent of operations will require training for aseptic sampling at $403 per operation. Recording and reviewing laboratory results averages 5 minutes per sample at an average wage of $13.43.

As shown in Table 22, implementation costs (training and sampling plan development) for generic *E. coli* sampling in poultry establishments will be $286 thousand. For cattle and swine establishments, the implementation costs are $2.34 million as shown in Table 23. Annual recurring costs total $10.5 million for for the 364 poultry establishments and $6.35 million for the 2,318 cattle and swine establishments. The total implementation costs for all 2,682 slaughter establishments are $2.63 million. The total recurring costs are $16.85 million.

In addition to the required sampling costs, there is the question of whether there will be additional compliance costs for establishments where test results indicate the performance criteria generic *E. coli* are not being met. In addressing this question, FSIS considered several factors. First, FSIS acknowledges that some establishments will find they are in compliance with the pathogen reduction standards for *Salmonella*, but are not meeting the performance criteria for generic *E. coli*. Second, the fact that the performance criteria are not established as enforceable regulatory standards does not mean that there will not be compliance costs. Third, the compliance actions identified for meeting the *Salmonella* standards (steam vacuum system, TSP systems and hot water rinses), are the same actions establishments would likely employ to achieve compliance with the performance criteria.

TABLE 22.—COSTS FOR IMPLEMENTING GENERIC E. COLI SAMPLING PROGRAMS IN POULTRY SLAUGHTER ESTABLISHMENTS

[Dollars in Thousands]

| Production Category | Number of establishments (number of annual samples) | Training for aseptic sampling | Sampling plan development | Samples collection and analysis (recurring) | Recording and review (recurring) |
|---|---|---|---|---|---|
| Turkeys Under 60,000; Chickens Under 440,000 | 108 (2,808) | 44 | 69 | 67 | 3 |
| Turkeys Between 60,000 and 780,000; Chickens Between 440,000 and 5,720,000 | 28 (2,915) | 6 | 18 | 70 | 3 |
| Turkeys over 780,000; Chickens over 5,720,000 | 228 (413,400) | 3 | 146 | 9,992 | 463 |
| Total | 364 (419,123) | 53 | 233 | 10,059 | 469 |

TABLE 23.—COSTS FOR IMPLEMENTING GENERIC E. COLI SAMPLING PROGRAMS FOR CATTLE AND SWINE SLAUGHTER ESTABLISHMENTS

[Dollars in Thousands]

| Production category | Number of establishments (number of annual samples) | Training for aseptic sampling | Sampling plan development | Samples collection and analysis (recurring) | Recording and review (recurring) |
|---|---|---|---|---|---|
| Cattle Under 6,000; Hogs Under 20,000 | 1,990 (51,740) | 802 | 1,274 | 1,242 | 58 |
| Cattle Between 6,000 and 78,000; Hogs Between 20,000 and 260,000 | 216 (16,430) | 54 | 138 | 394 | 18 |
| Cattle over 78,000; Hogs over 260,000 | 112 (184,470) | 1 | 72 | 4,427 | 206 |
| Total | 2,318 (252,640) | 857 | 1,484 | 6,063 | 283 |

After considering the above factors, FSIS concluded that if the low cost scenario for compliance with *Salmonella* standards proves to be more accurate, there will likely be more separate compliance costs for generic *E. coli*. As the costs for *Salmonella* compliance go up, the likelihood of separate generic *E. coli* costs goes down. It is important to note that under the high cost scenario, all cattle and swine slaughter establishments are using the steam vacuum system or a hot water rinse and half of all poultry slaughter establishments are using TSP systems. Under this scenario, it is difficult to imagine that any establishments would

still be failing to meet the performance criteria for generic *E. coli*.

FSIS considered the possibility that the smaller establishments conducting only seasonal testing would increase testing to cover the whole year to provide better assurance of control over sanitary dressing procedures. However, FSIS rejected this possibility after considering the cost pressures on small businesses. FSIS would certainly not expect to see these establishments use both expanded testing and hot water rinses.

3. HACCP Programs—Plan Development and Annual Reassessment Costs

a. Summary of Requirements. The proposed rule included a requirement that each inspected establishment develop a written HACCP plan for each distinct ''process'' conducted on the premises. The proposed rule identified nine process categories that would require separate HACCP plans. Each plan would include: identification of the processing steps which present hazards; identification and description of the CCP for each identified hazard; specification of the critical limit which may not be exceeded at the CCP (and if appropriate a target limit); a description of the establishment monitoring procedures; a description of the corrective action to be taken if the limit is exceeded; a description of the records which would be generated and maintained regarding this CCP; and a description of the establishment verification activities and the frequency at which they are to be conducted.

The requirements in the final rule for HACCP plans are essentially the same. The final rule requires that each establishment conduct a hazard analysis and then develop a comprehensive HACCP plan that covers each hazard identified. The final rule has eliminated the nine process categories because the sequencing of HACCP implementation will be based on establishment size and not on process categories. The final rule also includes the provision that each plan be reassessed on an annual basis.

b. Review of Preliminary Cost Estimates. Using existing databases (PBIS and ADRS) FSIS estimated that the 6,186 federally inspected establishments would require 16,899 HACCP plans, an average of 2.73 plans per establishment. It was assumed that each of the 2,893 state inspected establishments would have 2.1 plans per establishment for a total of 6,120 plans. The total number of plans for all establishments is, therefore, 23,019. The Agency requested specific comments on the assumptions used to estimate the number of state plans, but received none. In estimating the cost of HACCP plan development for federally inspected establishments, FSIS used the following cost estimates as shown in Table 24.

TABLE 24.—HACCP PLAN DEVELOPMENT COSTS

| Plan difficulty | Plan sequence | | |
|---|---|---|---|
| | First | Second | Third |
| Easy | 4,000 | 2,000 | 1,000 |
| Moderate | 8,000 | 4,000 | 2,000 |
| Difficult | 12,500 | 6,250 | 3,125 |

Table 24 accounts for both the complexity or difficulty of the plan and the experience gained by developing previous plans. The table was developed from several sources including discussions with a number of private sector food consultants and the results of the *HACCP Pilot Program Cost Findings* study which was conducted by RTI and completed in August 1994. The RTI Study found that the nine pilot establishments reported plan development costs ranging from $607 to $15,750.

For state establishments, FSIS assumed an average cost of $2,000 for 6,120 plans. For the federally-inspected establishments, the above table generated an average cost of approximately $2,020 per plan. The resulting average cost is relatively low because the preliminary analysis credited each establishment with having developed one plan prior to HACCP because of the need to develop plans for sanitation SOPs, microbial sampling and time-temperature controls. It was assumed that the experience gained in developing plans for these three near-term interventions could be applied to their first HACCP plan.

- The total cost for developing 23,019 plans was estimated at approximated $46.4 million ($34.14 million federal and $12.24 million state) spread over a 3 year implementation period.

c. Comments on the Preliminary RIA. There were several specific comments on the cost of developing a HACCP plan. Examples include:

- To write each plan would cost around $9,000.
- Average time to draft a plan is 300 hours.
- Average time of 300 hours at $125 per hour ($37,500).
- An average of $5,000 per establishment.
- Approximately $1,000 to $1,500 per establishment.

More general comments stated that FSIS had underestimated or overestimated the cost of plan development or that FSIS should develop or pay for the cost of developing plans. There were also comments that indicate that some establishments believed that they would be required to have a separate plan for each product they produce.

d. Response to Comments. The comments that suggested FSIS had overestimated costs or had developed an upper limit on implementation costs, pointed out that a market driven response to the rule would likely cut costs. The market would increase the number of consultants which would be available at reduced costs, especially for small establishments that are most likely to employ outside consultants. While FSIS agrees that the number of available consultants will increase and that the hourly cost for outside assistance will likely decrease, the Agency notes that Table 24 was developed with those factors in mind. The discussions with private sector food consultants focused on projected costs, recognizing that costs would decrease as more consultants became available and the overall level of industry expertise and experience increased.

The comments included a wide range of estimates for the cost of developing a HACCP plan. Most of the specific cost estimates contained in the comments were within the ranges presented in Table 24. The comments do not provide a compelling reason to modify Table 24, especially since FSIS has an ongoing effort to develop implementation aids for establishments that will help keep plan development costs down. In addition to generic models that will be available at least six months before any mandatory requirement, FSIS is developing or considering: (1) Information publications, such as a HACCP Handbook that explains how a establishment can effectively and economically incorporate the seven principles into its operations; (2) training videos and computer programs that present HACCP implementation guidance in alternative formats; (3) models for onsite HACCP training of establishment employees; and (4) a catalog of hazards with examples of control measures and generic plans for each slaughter and processing category described in the proposed rule. FSIS is also planning to sponsor in-establishment demonstration projects to generate real-world information and guidance about near-term and HACCP implementation issues in small businesses.

FSIS will also continue its technical assistance to state programs by including states' training officials in

Federal training efforts, by facilitating state access to and use of federal computer support systems, and by expansion of state/federal cooperative efforts through the Conference for Food Protection, the National Association of State Departments of Agriculture, the Association of Food and Drug officials, and the Meat and Poultry Inspection Advisory Committee. Also, FSIS' plans for in-establishment demonstration projects referenced above will focus on small establishments under State regulation as well as those under Federal regulation.

The findings from the nine pilot establishments reported in the RTI study were based on conditions existing in the 1991–1992 time period. Many factors have changed since then including the number of available HACCP consultants, the number of trained individuals, the number of courses available and the general level of knowledge concerning the implementation of HACCP principles in food processing establishments. These factors should help drive plan development cost down.

The 1994 RTI study noted that: ''Several participants commented that there is a lot more discussion and information about HACCP in the trade press and elsewhere today than there was even three years ago. Without exception, participants felt that USDA could reduce the costs of HACCP—especially training and HACCP plan development costs—by making as much information about HACCP available as possible.''

In response to comments that FSIS should develop or pay for the development of plans, FSIS believes that these suggestions would diminish the principle of having industry take ownership and responsibility for the production process. This principle is a key factor in HACCP. If FSIS developed or paid for the plans, it would detract from the establishment's assuming ownership and responsibility for the HACCP plans. FSIS also believes that government funding of the plans would set a bad precedent. If the government assumes the cost of compliance with regulatory actions which ultimately benefit the regulated industry, establishments will campaign for additional actions leading to greater government outlays. Government funded plans would also require an increase in the FSIS budget requiring a corresponding increase in taxes and also likely lead to more expensive plans. By bearing the costs, establishments will have a stronger incentive to control plan development costs than FSIS. Finally, FSIS expects that market forces will permit establishments to shift some of the costs to producers and consumers which is a more equitable allocation of costs than placing the burden on taxpayers in general.

In response to comments expressing concern that each product would require a HACCP plan, FSIS notes that there is a major distinction between requiring that ''each product must be covered by the establishment's HACCP plan'' and requiring that ''each product have a unique HACCP plan.'' The final complexity of an establishment's HACCP plan is related to the number of distinct processes used by the establishment and not the number of products produced.

e. Final Cost Estimates. Although the final rule has eliminated the process categories and requires a single, comprehensive HACCP plan for each establishment with hazards, the final cost estimates are based on the earlier estimates of 16,889 plans for federally inspected establishments and 6,120 plans for state inspected establishments. Since final cost is still a function of the number and complexity of processes, FSIS sees no reason to change the methodology for estimating HACCP plan development costs. Furthermore, it is reasonable to assume that establishments may develop their plans in segments beginning with relatively simple processes and then proceeding to more complex processes.

The final cost estimates for 23,019 HACCP plans are shown in Table 25. The final cost estimate for federally inspected establishments is based on Table 24 which presents different costs, depending on the sequence, for easy, moderate and difficult plans. The final cost estimate does not, however, assume that the first HACCP plan is actually the second plan because of experience gained in developing sanitation SOP plans and microbial sampling plans. The result is that the average cost for the 16,899 plans for federally inspected establishments is now $3,240, up from the preliminary analysis average of $2,020 per plan. The average cost for 6,120 plans in state inspected establishments is $2,000, the same per plan cost used in the preliminary analysis.

It is assumed that HACCP validation is an integral part of HACCP plan development and that the requirement for annual reassessment will be a minimal cost for establishments that do not modify their products or processes and are not experiencing difficulty in meeting all critical limits. The analysis assumes that the average annual reassessment will take two hours per plan at a quality control manager's salary of $25.60 per hour. Thus, the average annual reassessment will cost $51.20 per plan.

TABLE 25.—COST OF HACCP PLAN DEVELOPMENT AND ANNUAL REASSESSMENT

| Establishment category | Number establishments | Number plans | Total cost ($000) | Average cost per plan (dollars) | Annual reassessment ($000) |
|---|---|---|---|---|---|
| Low | 2,234 | 5,106 | 17,762 | 3,479 | 261 |
| Medium | 3,103 | 8,712 | 28,075 | 3,223 | 446 |
| High | 849 | 3,081 | 8,911 | 2,892 | 158 |
| Subtotal | 6,186 | 16,899 | 54,748 | 3,240 | 865 |
| State | 2,893 | 6,120 | 12,240 | 2,000 | 313 |
| Total | 9,079 | 23,019 | 66,988 | 2,910 | 1,179 |

As discussed above under methodology, this cost analysis assumes a static number of establishments and processes while recognizing that the rule will add to the cost of new establishments or processes. One such

cost would be the annual reassessment for establishments that add new processes or substantially modify existing production practices.

4. HACCP Programs—Recordkeeping Costs

a. Summary of Requirements. The final rule requires that all establishments record observations when monitoring critical control points and document any deviations and corrective actions taken. The rule also requires a certification review of records by an employee not involved in recording observations. Such recording and certification review of observations at critical control points is a fundamental HACCP principle.

FSIS is requiring that the records involving measurements during slaughter and processing, corrective actions, verification check results, and related activities contain the identity of the product, the product code or slaughter production lot, and the date the record was made. The purpose of this requirement is to assure that both the company and the regulator can readily link a record to a product and the timeframe in which it was processed. FSIS is also requiring that the information be recorded at the time that it is observed and that the record be signed by the operator or observer.

FSIS is also requiring that the HACCP records be certified by a company employee other than the one who produced the record, before the product is distributed in commerce. The purpose of this review is to verify that the HACCP system has been in operation during the production of the product, that it has functioned as designed and that the company is taking full responsibility for the product's meeting applicable regulatory requirements. The employee conducting the certification review must sign the records.

FSIS is also requiring that HACCP plans and records be available for review by program personnel. Records access is necessary to permit verification of all aspects of a HACCP system.

b. Review of Preliminary Cost Estimates. In the preliminary cost analysis, recordkeeping cost was defined to include the time it takes to make observations and record the results of those observations plus the cost of certifying and maintaining records. Several key variables were involved in the estimates for HACCP recordkeeping costs for the preliminary RIA. First, it was established that recordkeeping costs are related to the number of processing lines operating simultaneously and not the number of HACCP plans. That is, an establishment may have several HACCP plans but never have more than one operating at any given time. To estimate recordkeeping costs it was necessary to collect data on the average number of production lines operating per shift. To estimate product lines, data was collected for a sample of low, medium and high volume establishments from each of the FSIS Regional Offices. The data on average number of simultaneous operating lines was collected for processing operations, red meat slaughter operations and poultry slaughter operations for both first and second shifts. Costs were then estimated based on 7,639 federal and 4,080 state inspected operations as shown in Table 26.

TABLE 26.—OPERATIONS IN FEDERAL AND STATE INSPECTED ESTABLISHMENTS

| Manufacturing operation | Federal inspected establishments | State inspected establishments | Total |
|---|---|---|---|
| Processing | 6,006 | 2,752 | 8,758 |
| Meat slaughter | 1,327 | 1,270 | 2,597 |
| Poultry slaughter | 306 | 58 | 364 |
| Total | 7,639 | 4,080 | 11,719 |

It was further assumed that each State establishment was a single shift establishment and that State establishments would have the same number of production lines as the first shift of a low volume federal establishment.

Other variables included the average number of CCP's per plan and the average amount of time for recording and reviewing records per CCP. For federally inspected establishments, the analysis assumed that processing HACCP plans have an average of 7.4 CCP's and slaughter plans have an average of 5 CCP's. It was assumed that State inspected establishments will average 5 CCP's per HACCP plan. Recording time was estimated at an average of 5 minutes per CCP per shift. Review time for certification was estimated at an average of 2 minutes per CCP per shift. Recording cost was estimated based on an employee earning $12.87 per hour. Certification cost was based on a supervisor or QC technician earning $18.13 per hour. All storage costs were based on a national survey of storage costs showing an average annual cost of $8.40 per square foot.

Total recordkeeping costs are the sum of the costs for three components: Monitoring CCP's and recording findings, certifying records, and storing records. The following calculation for the annual costs of recording the findings from monitoring CCP's in State processing operations illustrates how the above estimates were used in estimating total recordkeeping costs:

Recording Costs For State Processing Operations =
(2,752 operations) × (1.1 average production lines)
× (5 minutes per CCP per day ÷ 60 minutes per hour)
× (5 CCP's per line)
× ($12.87 per hour) × (260 days per year)
= § 4.22 million

The total costs per establishment for recordkeeping, as estimated in the preliminary analysis, are summarized in Table 27. The total aggregate costs are shown in Table 28. The average cost per establishment and the total aggregate costs were reduced to account for the recordkeeping that already occurs in TQC, NELS and SIS establishments.

TABLE 27.—SUMMARY OF RECORDKEEPING COSTS PER ESTABLISHMENT

[Dollars]

| Establishment category | Recording observations | Certifying records | Maintaining records | Recurring annual cost |
|---|---|---|---|---|
| Low | 2,560 | 1,442 | 28 | 4,030 |
| Medium | 4,202 | 2,368 | 52 | 6,621 |
| High | 10,994 | 6,195 | 90 | 17,279 |
| State | 2,163 | 1,219 | 33 | 3,415 |

TABLE 28.—HACCP RECORDKEEPING COSTS

[$ Thousands]

| Establishment category | Number of establishments | Annual costs |
|---|---|---|
| Low | 2,234 | 9,003 |
| Medium | 3,103 | 20,545 |
| High | 849 | 14,669 |
| Subtotal | 6,186 | 44,217 |
| State | 2,893 | 9,880 |
| Total | 9,079 | 54,097 |

With the methodology used for estimating recordkeeping costs, it is also possible to look at annual recording and certification cost per operating line. Assuming a line runs 52 weeks, 40 hours per week, 2,080 hours per year,

the average annual recordkeeping cost (excluding any storage costs) for a processing line in a federally inspected establishment would be $3,226.23 ($2,063.40 recording plus $1,162.74 certification). The average annual cost for a federally inspected slaughter line would be $2,179.88 ($1,394.25 recording plus $785.63 certification). All lines in State inspected establishments were assumed to have an annual cost of $2,179.88.

c. Comments on the Preliminary RIA. Most of the comments referring to HACCP recordkeeping costs were general comments that the costs would be extremely burdensome. The comments did not question the methodology used in the preliminary analysis to estimate either recording, reviewing or storage costs. The comments included at least two proposed modifications that would substantially reduce costs. One comment suggested that small establishments record only deviations from the HACCP plan and responses to them. At one of the public hearings a representative from a consumer organization suggested that inspectors could conduct the recordkeeping in small establishments.

d. Response to Comments. FSIS believes that while both of the above suggestions would reduce cost, they both do damage to the concept of HACCP. Having the industry take ownership and responsibility of the production process is a key component of HACCP. Having inspectors conduct the recordkeeping would severely detract from ownership. Furthermore, a fundamental HACCP principle requires that observations be recorded and reviewed at critical points in the manufacturing process on an ongoing basis. Recording only deviations does not meet this principle.

The discussion of sanitation SOP recordkeeping costs identified three factors that affect how one views such costs. At least two of those factors apply here. HACCP recordkeeping is a cost that can be reduced through good management and efficiency and should also decrease with experience. If recordkeeping can be conducted by employees working at a CCP location, the additional cost should be minimal. HACCP should also substantially reduce the time establishment officials currently spend interacting with or responding to inspection findings. In addition to responding to the approximately 700,000 to 800,000 Processing Deficiency Records (PDRs) per year, establishments have thousands of meetings with program officials following reviews conducted by area and regional officials or reviewers from the Program Review Division in Lawrence, Kansas. FSIS believes strongly that establishment officials will find some recordkeeping time from reducing inspection interaction time.

e. Final Cost Estimates. After considering the comments, FSIS does not see a need to adjust the costs estimates shown in Tables 27 and 28. The final aggregate cost estimates for recordkeeping are those shown in Table 28.

5. HACCP Programs-Training Costs

a. Summary of Requirements. The final rule requiring that each establishment have access to a HACCP-trained individual remains identical to the training requirement as proposed. The final rule does not, however, include the proposed requirement that the name and resume of the HACCP-trained individual be on file at the establishment.

b. Review of Preliminary Cost Estimates. The proposed rule included the requirement that each establishment have access to a HACCP-trained individual. In the preliminary cost analysis FSIS pointed out that establishments would have options for meeting that requirement. For example, establishments could train an existing employee or use a consultant on an as-needed basis. To provide a cost estimate, FSIS assumed that each slaughter or processing operation would send one employee to a recognized HACCP course for approximately three days.

The preliminary analysis assumed a combination establishment would require training for both slaughter and processing operations. The preliminary analysis identified 11,719 separate meat slaughter, poultry slaughter and processing operations. The analysis assumed that 5 percent of these operations currently have a trained individual and 11,133 would require training.

Training would be a one-time, up-front expense. The cost of training 11,133 establishment employees at $2,514 each would be approximately $28 million. The $2,514 included tuition for a three-day course, travel expenses and wages. In estimating these costs, FSIS used a listing of 1994 HACCP courses compiled by the USDA Extension Service.

c. Comments on the Preliminary RIA. Most of the comments relating to the cost of training industry personnel were of a general nature (e.g., FSIS underestimated the cost of training) or suggested that all training be funded by USDA. Many small processors lumped training with other requirements and indicated that the cost of implementing HACCP would force them to close. A couple of comments indicated that the commenter believed they would have to hire an additional HACCP-trained employee. Several comments noted that the training costs estimated in the IFSE study were far higher than the costs estimated by FSIS.

d. Response to Comments. With respect to the comments that referred to the higher training costs estimated in the IFSE study, FSIS notes that the IFSE study assumed that training was both an up-front and a continuing annual expense. They also assumed that HACCP training was necessary for top management, supervisors and relevant hourly employees. Since the IFSE study was written with a beef slaughter establishment in mind, it is assumed that the authors believed it is necessary to train some or all of the employees working the dressing line. Under their assumptions, a high turnover would require substantial recurring annual costs.

The FSIS cost estimate was tied to meeting the proposed regulatory requirements. The IFSE estimates are the authors' judgment of what would be required to ''successfully'' implement an effective HACCP program. The IFSE study did not provide any rationale for the cost estimates used. For example, the authors assumed that annual training costs for 5,127 small businesses would be $10,000 each for a total annual cost of $50 million. That estimate would appear high considering the large number of establishments with fewer than five employees.

The IFSE study does raise the issue of whether a single three-day course for one employee is adequate to ensure an effective HACCP program. A low cost ongoing training program may be better. FSIS now plans on having training videos and/or correspondence courses available for each establishment. This will present an easier burden for very small establishments because it will not require having an employee leave on travel to receive training. As the number of available courses and locations increases, travel costs will also decrease. Trade associations can help provide local training for all establishments near large metropolitan areas.

FSIS also recognizes that employee turnover will require some level of recurring cost. The necessity of training new hires should, however, decrease over time as the available pool of HACCP-trained individuals increases. FSIS will, however, include a 10 percent recurring cost in the final cost estimate.

e. Final Cost Estimates. The final training cost estimates are shown in Table 29. The one-time cost of $27,988 thousand is the same cost as estimated for the preliminary analysis. In response to comments, an annual recurring cost of $2.8 million has been added.

TABLE 29.—HACCP—TRAINING COSTS

[$ Thousands]

| Establishment category | Number of employees | One-time cost | Recurring costs (10%) |
|---|---|---|---|
| Low ..... | 2,610 | 6,562 | 656 |
| Medium | 3,593 | 9,033 | 903 |
| High ..... | 1,054 | 2,650 | 265 |
| Subtotal | 7,257 | 18,244 | 1,824 |
| State ..... | 3,876 | 9,744 | 974 |
| Total ..... | 11,133 | 27,988 | 2,799 |

6. HACCP Programs—Impact on Total Quality Control/Overtime Issues

a. Summary of Requirements. The proposed rule did not include proposed revisions to existing Total Quality Control (TQC) regulations. However, the preamble stated that FSIS is considering having HACCP be the only Agency recognized health and safety related process control system. The preliminary RIA published with the proposed rule stated that: ''With the publication of the rule, TQC establishments could lose their authority to produce and ship product after their normal shift production time. As a result, 287 active TQC establishments could begin to incur annual overtime charges.''

The final decisions on TQC regulations have not been made. This final analysis uses the impact on overtime as a conservative estimate of the potential impact of pending decisions.

b. Review of Preliminary Cost Estimates. The Agency's supplemental cost analysis recognized that there are 287 TQC establishments that would incur overtime costs to continue their current operating schedules if the TQC regulations were eliminated. The total cost for these 287 establishments was estimated at $2.1 million per year. The preliminary analysis estimated that the total of 287 included 112 low, 124 medium and 51 high volume producers.

c. Comments on the Preliminary RIA. A TQC establishment commented that under the proposed rule they would have to pay an additional $32,308.80 per year in overtime charges. The establishment commented that these additional overtime charges would equate to a substantial portion of their annual net profit.

d. Response to Comments. The comment from the TQC establishment is consistent with the preliminary analysis that was based on the premise that TQC establishments would lose their authority to produce and ship products after their normal shift production time. If such authority is withdrawn establishments would have to incur overtime charges if they want to continue their present operating schedules.

The establishment estimated its potential overtime cost based on an assumption of 100 percent coverage. If the establishment's overtime hours were covered by a patrol assignment, they would be subject to the provisions of proportional coverage and the actual level of overtime charges could be substantially lower.

Inspection assignments cover 8 hours of regular time and may also include scheduled overtime inspection. An assignment may specify 8 hours in one establishment or direct the inspector to cover multiple establishments, i.e., a patrol assignment where the inspector would spend a portion of each day in each establishment. In cases where an inspector spends 8 hours in a single establishment and that establishment decides to operate for 2 hours of overtime on a routine basis, inspection coverage may be provided by having the assigned inspector work 2 hours of overtime. This type of coverage would be likely if the establishment was located in an isolated area. In this type of case, the establishment would be charged for 2 hours of overtime inspection each day. This type of overtime situation would lead to maximum costs as suggested by the commenter.

If the establishment was part of a patrol assignment and there were two establishments working 2 hours of overtime, the overtime production could be covered by having the inspector work 2 hours of patrol overtime, but each establishment would only be billed for one hour, i.e., proportional overtime coverage.

Because the majority of establishments are covered by patrol assignments, proportional coverage is employed frequently. Thus, the establishments' estimate of $32,308.80 is a maximum level. The actual level of charges could probably be substantially lower.

e. Final Cost Estimates. This final analysis has included a cost of $2.1 million for annual overtime charge. The analysis has assumed that the additional overtime charges will occur on the same timeframe as the sequencing of HACCP implementation.

*E. Summary of Costs for Low Volume Producers*

Because there has been particular interest in the impact of this rule on small business, this final section summarizes the overall costs for low volume producers. Table 30 illustrates the costs faced by a typical low volume producer over the four-year implementation period. Because there are less than 100 low volume poultry slaughter establishments, the costs for generic *E. coli* sampling was not included in Table 30. The costs illustrated in Table 30 apply to the majority of inspected establishments, an estimated 2,234 federally inspected establishments and all but a few of the 2,893 state inspected establishments. These 5,000-plus establishments all meet the regulatory flexibility definition for a very small establishment and have the full 42 months to implement mandatory HACCP systems. There are another 658 establishments (medium volume production) that will have slightly higher costs, but will also have 42 months to implement HACCP because they meet the regulatory flexibility criteria for a very small establishment. All establishments meeting the regulatory flexibility criteria for small establishments will have 30 months to implement HACCP. The 353 large establishments (more than 500 employees) will be required to implement HACCP 18 months after publication.

TABLE 30.—SUMMARY OF COSTS FOR A TYPICAL LOW VOLUME ESTABLISHMENT

[Dollars]

| Cost category | Year 1 | Year 2 | Year 3 | Year 4 | Year 5+ |
|---|---|---|---|---|---|
| I. Sanitation SOPs Plans and Training ..... | [a] 190 | ..... | ..... | ..... | |
| Observation and Recording ..... | 1,242 | 1,242 | 1,242 | 1,242 | 1,242 |
| II. Compliance With *Salmonella* Standards ..... | ..... | ..... | ..... | [b] 0–1,200 | [b] 0–1,200 |

TABLE 30.—SUMMARY OF COSTS FOR A TYPICAL LOW VOLUME ESTABLISHMENT—Continued

[Dollars]

| Cost category | Year 1 | Year 2 | Year 3 | Year 4 | Year 5+ |
|---|---|---|---|---|---|
| III. HACCP Plan Development | | | | 4,231–7,952 | |
| Annual Plan Reassessment | | | | | 177 |
| Initial Training | | | | [d] 2,937–3,368 | |
| Recurring Training | | | | | 294–337 |
| Recordkeeping | | | | 2,015 | 4,030 |
| IV. Additional Overtime | | | | [e] 0–3,702 | [e] 0–7,404 |
| Total | 1,432 | 1,242 | 1,242 | 10,425–11,625 | 5,743–6,986 |

[a] This cost for the 112 low volume TQC establishments would be $64.

[b] The estimate of $1,200 is based on monthly testing for two products and an antimicrobial rinse for one.

[c] The Cost Analysis is based on estimates that low volume federally inspected establishments will require an average of 2.29 plans each, at a cost of $3,479 per plan (see Table 25) for a total average plan development cost of $7,952. The number of plans for federally inspected establishments is based on data from existing FSIS data bases. It was assumed that state plans have an average of 2.12 plans each for a total cost of $4,231 per establishment ($2,000 per plan).

[d] Average training costs for state establishments ($3,368 per establishment) were estimated to be slightly higher than the average federally inspected low volume establishments ($2,937 per establishment) because the state programs have a higher percentage of combination slaughter and processing establishments. The cost analysis assumed that plans would train one individual for each processing, red meat slaughter and poultry slaughter operation.

[e] The preliminary analysis estimated that 112 of 287 active TQC establishments are low volume producers. The average TQC establishment avoids an annual overtime charge of $7,404. The cost estimates in Table 30 for additional overtime costs apply only to those 112 establishments and assume that TQC provisions will be phased out as HACCP is phased in—42 months after publication for the low volume establishments. Because the overtime costs apply to only 112 establishments, they are not included in the Table 30 totals.

The average costs shown in Table 30 will be a burden for many of the low volume producers. However, there are factors that should help diminish the burden. Most of the costs and essentially all of the recurring costs are labor costs for monitoring sanitation procedures, monitoring HACCP critical control points and keeping both HACCP and sanitation records. As the above analysis points out, these are costs that can be reduced through efficient management and allocation of resources and should decrease with experience. The Agency also views a portion of these costs as a shift in resources, i.e., establishment management should spend more resources monitoring establishment operations and less time interacting with program personnel.

Another way of illustrating costs to small businesses is to look at the costs for one or more specific examples. Table 31 illustrates the costs for a small, single-shift, processing establishment (no TQC or sanitation PQC program) with two distinct production operations other than raw ground product (overall average was estimated at 2.29 based on data shown in Table 25).

TABLE 31.—COSTS FOR TYPICAL SINGLE-SHIFT PROCESSING ESTABLISHMENT

[Dollars]

| Requirement | Development and Implementation costs | Recurring Annual Costs |
|---|---|---|
| Sanitation SOP's | 190 | 1,242 |

TABLE 31.—COSTS FOR TYPICAL SINGLE-SHIFT PROCESSING ESTABLISHMENT—Continued

[Dollars]

| Requirement | Development and Implementation costs | Recurring Annual Costs |
|---|---|---|
| HACCP Plan Development | 6,958 | 0 |
| Annual Plan Reassessment | 0 | 102 |
| Training | 2,514 | 251 |
| Recordkeeping | 0 | 6,480 |
| Total | 9,662 | 8,075 |

If one of the two production operations produced a raw ground product, the establishment would have to meet the pathogen reduction performance standard for that product. As noted earlier in the development of the low and high cost scenarios for meeting the new *Salmonella* standards, raw ground operations do not have the same opportunities to reduce *Salmonella* levels as do slaughter establishments. They can control growth by avoiding temperature abuse and can limit cross-contamination, but basically they must depend on the Salmonella levels of their incoming product in order to meet the performance standards. These establishments may choose to test incoming product in order to eliminate suppliers whose product is found to be positive. The final analysis has assumed that the low volume producers would not test incoming ingredients.

Table 32 illustrates the costs for a small, single-shift, combination (slaughter and further processing) establishment that slaughters cattle or swine, but not both, and has a single further processing operation other than raw ground product. The establishment is not under TQC inspection.

TABLE 32.—COSTS FOR TYPICAL SINGLE-SHIFT COMBINATION ESTABLISHMENT

[Dollars]

| Requirement | Development and implementation costs | Recurring annual costs |
|---|---|---|
| Sanitation SOP's | 190 | 1,242 |
| Compliance with *Salmonella* Standards | 0 | 800 |
| *E. coli* Sampling | 1,043 | 653 |
| HACCP Plan Development | 6,958 | 0 |
| Annual Plan Reassessment | 0 | 102 |
| Training | 5,028 | 503 |
| Recordkeeping | 0 | 5,434 |
| Total | 13,219 | 8,734 |

The cost of meeting the pathogen reduction performance standards assumes that the establishment will use a hot water antimicrobial rinse and have one sample per month analyzed at an outside laboratory ($33.35 per sample-$400 per year). The average number of head slaughtered in a low volume establishment is approximately 5,000

annually. The annual cost for the rinse is $400.

The development costs for *E. coli* sampling in the small establishment includes $640 for developing a sampling plan and $403 to train an individual to conduct aseptic sampling. The recurring costs are based on the assumption that an average low volume slaughter establishment will have to complete two sampling windows (26 samples) before they demonstrate compliance with established criteria.

The cost of HACCP training has doubled for the combination establishment because the FRIA assumed that slaughter and processing operations are significantly different, so that the establishment must either train two employees or send one employee to two separate training courses.

The HACCP recordkeeping costs (monitoring CCP's and recording findings, reviewing records and storing records) in the above two examples assume that the establishments are operating each process continuously over a standard 52-week, 260-day, 2,080-hour work year. Data collected during the preliminary analysis indicates that many low volume establishments frequently have only a single production line operating at a given time. As shown in Tables 27 and 30, the final analysis estimates an average annual cost for HACCP recordkeeping of $4,030 for low volume establishments.

Appendix A to Final Regulatory Impact Assessment

Response to Comments Related to the Preliminary Regulatory Impact Analysis But Not Addressed Directly in the Text of the Final Analysis

1. A comment noting that the ''data in Tables 1 and 2, (60 FR 6781) for *Toxoplasma gondii* are confusing or in error'' is correct. The tables as published contained typographical errors that have been corrected for this analysis. The number of cases of foodborne illness from toxoplasmosis should be 2,056 cases, not 3,056 cases. The total number of cases from the foodborne illnesses considered also needs to be adjusted to correct for the above typographical error. Specifically, the total number of cases should be 3,605,582 to 7,132,823, and not 3,606,582 to 7,133,823.

2. The same comment questioned whether it is true that the ''estimated medical costs for the 2,056 cases (toxoplasmosis) and 41 deaths is $2,7000,000,000?'' This estimate is correct but these costs include the estimated costs of lost productivity and costs of residential care as well as the estimated medical costs of toxoplasmosis.

3. There were several comments that indicated that while attempting to reduce the overall public health risk, the Agency could be increasing the risk to farmers and small producers that now have livestock custom-slaughtered at inspected establishments. If a large number of these small diverse businesses go under, the comments predicted an increase in at- home slaughter under very marginal conditions. These comments imply at-home slaughter is a high risk practice using terms such as barn yard butchering or shade tree butchering or back shed butchering.

Changes in the final rule should allow most small businesses to continue to operate successfully under inspection. There are some small businesses that are currently primarily custom-exempt/retail exempt operations that may choose to withdraw from inspection. These types of facilities will still be available for their custom slaughtering services.

4. A comment referred to the FSIS assertion that consideration of the costs of the various alternatives under examination is not relevant because the alternatives do not meet the Agency's goal of achieving the maximum pathogen reduction possible. The commenter concluded that this is an entirely inappropriate analytical framework for the examination of regulatory alternatives. By starting from the assumption that only the maximum benefit attainable will suffice, FSIS effectively renders its consideration of available regulatory alternatives a complete sham. The purpose of a regulatory impact assessment should be to examine both the benefits and the costs attributable to each available alternative, and to consider whether there is an alternative to the Agency proposal that is a more cost-effective means of addressing the problem at hand.

5. One commenter stated that the Agency must include the costs attributable to the retained requirements as well. These retained costs will significantly increase the operational costs of the combined, layered system. FSIS does not agree that the RIA needs to include the cost of existing requirements.

6. Comments expressed concern that the proposed rule was an experiment to collect the data needed to determine whether it was a good idea. These comments stated that industry should not bear the cost of a government research project. FSIS has clearly stated the public health objective of this rule.

7. There are several comments that referred to a study conducted by the Research Triangle Institute for FSIS. In that study, *HACCP Pilot Programs Cost Findings,* August 31, 1994, RTI collected cost information during personal interviews at all nine establishments that had participated in USDA's HACCP Model Pilot Program.

One comment noted that the pilot establishments used for the study are establishments that are larger than most of the establishments that are going to be affected. The RTI study noted that none of the voluntary participants have annual sales under $3 million. The RTI study was one source of information for the FSIS cost analysis. The Agency did not use the information in a way that suggested it was representative of all establishments or in any way imply that it was.

Another comment stated that USDA relied very heavily on the nine pilot establishment studies. The data collected by RTI was one source of information used for the preliminary cost analysis. The analysis clearly cites the RTI study as one of several data sources.

A comment during the public hearing attributed a cost of $23,000 or $27,000 to the RTI study for a hazard analysis, plan development and validation for a small business that doesn't need any equipment or establishment upgrade. The RTI study reported costs for plan development ranging from $607 to $15,750. FSIS assumes that the hazard analysis is part of plan development. The RTI study did not address a separate cost component for validation.

8. One comment indicated that the source of the estimates for total cases and deaths for *E. coli* O157:H7 does not support the number used in the benefit estimates. The preliminary analysis was based on 10,000–20,000 total cases and an estimate of from 200–500 total deaths. Sources identified were the AGA conference and CDC communications. The ''CDC comm.'' citation mentioned in the FSIS proposal refers to both the Ostroff et al. (1989) and the McDonald et al. (1988) articles as described in the comment. These references provide an incidence rate for *E. coli* O157:H7 of 2.1/100,000 to 8/100,000. The AGA conference suggests there are 10,000 to 20,000 cases of *E. coli* O157:H7 each year in the United States. This translates to a rate of approximately 4/100,000 to 8/100,000, which is higher on the lower estimate. ERS chose to use the consensus numbers because they reflect the current thinking of a nonadvocate panel of experts. FSIS agrees with the commenter that better data on

foodborne disease incidence is needed but believe that the preliminary analysis used the best estimates available.

9. Commenter stated FSIS relied on faulty data. FSIS responds that there is a difference between saying data are limited and saying data are faulty. Existing food safety data are limited and more thorough data may not be available for a long time.

10. A commenter noted that FSIS did not address the ''cost'' of the development of a highly susceptible population because some exposure is necessary to establish immunity. The same commenter suggested there might be a ''nutritional health'' cost penalty, i.e., the rule would increase the cost of food so much that consumers would not be able to afford nutritional food. FSIS notes that the commenter did not provide support for these ''costs.''

11. A commenter noted that their low annual insurance premium of $150 strongly suggests that the insurance industry considers their existing safety record commendable and worthy of a low liability rate. FSIS notes that another comment has suggested that lower rates are being offered in conjunction with improved process control systems.

[FR Doc. 96–17837 Filed 7–18–96; 8:45 am]

BILLING CODE 3410–DM–P