7–25–96
Vol. 61 No. 144
Pages 38563–39038

federal register

Thursday
July 25, 1996

FEDERAL REGISTER Published daily, Monday through Friday, (not published on Saturdays, Sundays, or on official holidays), by the Office of the Federal Register, National Archives and Records Administration, Washington, DC 20408, under the Federal Register Act (49 Stat. 500, as amended; 44 U.S.C. Ch. 15) and the regulations of the Administrative Committee of the Federal Register (1 CFR Ch. I). Distribution is made only by the Superintendent of Documents, U.S. Government Printing Office, Washington, DC 20402.

The Federal Register provides a uniform system for making available to the public regulations and legal notices issued by Federal agencies. These include Presidential proclamations and Executive Orders and Federal agency documents having general applicability and legal effect, documents required to be published by act of Congress and other Federal agency documents of public interest. Documents are on file for public inspection in the Office of the Federal Register the day before they are published, unless earlier filing is requested by the issuing agency.

The seal of the National Archives and Records Administration authenticates this issue of the Federal Register as the official serial publication established under the Federal Register Act. 44 U.S.C. 1507 provides that the contents of the Federal Register shall be judicially noticed.

The Federal Register is published in paper, 24x microfiche and as an online database through *GPO Access*, a service of the U.S. Government Printing Office. The online edition of the Federal Register on *GPO Access* is issued under the authority of the Administrative Committee of the Federal Register as the official legal equivalent of the paper and microfiche editions. The online database is updated by 6 a.m. each day the Federal Register is published. The database includes both text and graphics from Volume 59, Number 1 (January 2, 1994) forward. Free public access is available on a Wide Area Information Server (WAIS) through the Internet and via asynchronous dial-in. Internet users can access the database by using the World Wide Web; the Superintendent of Documents home page address is http://www.access.gpo.gov/su__docs/, by using local WAIS client software, or by telnet to swais.access.gpo.gov, then login as guest, (no password required). Dial-in users should use communications software and modem to call (202) 512–1661; type swais, then login as guest (no password required). For general information about *GPO Access*, contact the *GPO Access* User Support Team by sending Internet e-mail to gpoaccess@gpo.gov; by faxing to (202) 512–1262; or by calling (202) 512–1530 between 7 a.m. and 5 p.m. Eastern time, Monday–Friday, except for Federal holidays.

The annual subscription price for the Federal Register paper edition is $494, or $544 for a combined Federal Register, Federal Register Index and List of CFR Sections Affected (LSA) subscription; the microfiche edition of the Federal Register including the Federal Register Index and LSA is $433. Six month subscriptions are available for one-half the annual rate. The charge for individual copies in paper form is $8.00 for each issue, or $8.00 for each group of pages as actually bound; or $1.50 for each issue in microfiche form. All prices include regular domestic postage and handling. International customers please add 25% for foreign handling. Remit check or money order, made payable to the Superintendent of Documents, or charge to your GPO Deposit Account, VISA or MasterCard. Mail to: New Orders, Superintendent of Documents, P.O. Box 371954, Pittsburgh, PA 15250–7954.

There are no restrictions on the republication of material appearing in the Federal Register.

How To Cite This Publication: Use the volume number and the page number. Example: 60 FR 12345.

SUBSCRIPTIONS AND COPIES

PUBLIC	
Subscriptions:	
Paper or fiche	202–512–1800
Assistance with public subscriptions	512–1806
General online information	202–512–1530
Single copies/back copies:	
Paper or fiche	512–1800
Assistance with public single copies	512–1803
FEDERAL AGENCIES	
Subscriptions:	
Paper or fiche	523–5243
Assistance with Federal agency subscriptions	523–5243

For other telephone numbers, see the Reader Aids section at the end of this issue.

Printed on recycled paper containing 100% post consumer waste

Contents

Federal Register
Vol. 61, No. 144
Thursday, July 25, 1996

Agency for International Development
NOTICES
Meetings:
Voluntary Foreign Aid Advisory Committee, 38785

Agency for Toxic Substances and Disease Registry
NOTICES
Hazardous substances releases and facilities:
Public health assessments and effects—
Quarterly listing, 38754

Agriculture Department
See Food Safety and Inspection Service
See Foreign Agricultural Service
See Forest Service
PROPOSED RULES
Freedom of Information Act and Privacy Act; implementation:
Federal regulatory review, 38657–38663

Army Department
See Engineers Corps

Children and Families Administration
NOTICES
Agency information collection activities:
Submission for OMB review; comment request, 38756–38757
Privacy Act:
Systems of records and computer matching programs, 38754–38756

Commerce Department
See Foreign-Trade Zones Board
See International Trade Administration
See National Oceanic and Atmospheric Administration

Committee for the Implementation of Textile Agreements
NOTICES
Cotton, wool, and man-made textiles:
Dominican Republic, 38717–38718

Customs Service
NOTICES
Outbound manifest and shippers export declaration compliance workshops, 38803

Defense Department
See Engineers Corps

Education Department
NOTICES
Agency information collection activities:
Proposed collection; comment request, 38719
Submission for OMB review; comment request, 38719–38720

Energy Department
See Federal Energy Regulatory Commission
PROPOSED RULES
Acquisition regulations:
Management and operating contracts—
Performance-based management contracting, fines, penalties, etc., 38701–38702
NOTICES
Environmental statements; availability, etc.:
Foreign research reactor spent nuclear fuel; nuclear weapons nonproliferation policy, 38720–38721

Engineers Corps
NOTICES
Environmental statements; availability, etc.:
Jennings Randolph Lake, MD and WV; master plan update, 38718–38719

Environmental Protection Agency
RULES
Air quality implementation plans:
Preparation, adoption, and submittal—
Vehicle inspection and maintenance program requirements; flexibility amendments (Ozone Transport Regions), 39032–39037
Air quality implementation plans; approval and promulgation; various States:
California, 38571–38574
Connecticut, 38574–38577
Illinois, 38577–38590
Louisiana, 38590–38591
New Jersey, 38591–38594
New York, 38594–38597
Washington, 38597–38600
Superfund program:
Toxic chemical release reporting; community-right-to-know—
Hydrochloric acid, 38600–38605
PROPOSED RULES
Air quality implementation plans; approval and promulgation; various States:
American Samoa et al.; correction, 38664–38682
California, 38682–38683
Illinois, 38683
Washington, 38683–38684
Hazardous waste:
Land Disposal Program Flexibility Act; surface impoundment study, 38684–38687
NOTICES
Agency information collection activities:
Submission for OMB review; comment request, 38726–38727
Confidential business information and data transfer, 38727–38728
Pesticide registration, cancellation, etc.:
Bonide Insect Fog, etc., 38731–38732
Cynazine, 39024–39029
Dragon Ferbam Wettable Fungicide, etc., 38728–38731
Pesticides; temporary tolerances:
Abbott Laboratories, 38733
Superfund; response and remedial actions, proposed settlements, etc.:
L.H. Inc. Site, OH, 38733–38734

Executive Office of the President
See Presidential Documents
See Trade Representative, Office of United States

Federal Aviation Administration
PROPOSED RULES
Licensed launch activities; financial responsibility requirements, 38992–39021

Federal Communications Commission
RULES
Common carrier services:
Telephone number portability; policy and technical issues, 38605–38642
PROPOSED RULES
Common carrier services:
Telephone number portability; cost recovery, 38687–38693
Personal communications services:
Commercial mobile radio services licensees—
Geographic partitioning and spectrum disaggregation; market entry barriers elimination, 38693–38701

Federal Election Commission
NOTICES
Meetings; Sunshine Act, 38734

Federal Emergency Management Agency
NOTICES
Disaster and emergency areas:
Indiana, 38734–38735
Minnesota, 38735
Oklahoma, 38735
Virgin Islands, 38735
Radiological emergency; State plans:
Rhode Island, 38735–38736

Federal Energy Regulatory Commission
RULES
Natural gas companies (Natural Gas Act):
Interstate natural gas company rate schedules and tariffs; filing and reporting requirements, 38565–38567
Oil pipelines:
Cost-of-service filing requirements—
Trans-Alaska Pipeline System carriers, etc.; applicability, 38567–38569
PROPOSED RULES
Electric utilities (Federal Power Act):
Rate schedules filing—
Capacity reservation open access transmission tariffs, 38663–38664
NOTICES
Applications, hearings, determinations, etc.:
ANR Pipeline Co., 38721–38722
Columbia gas transmission Corp., 38722
Cook Inlet Energy Supply, 38722
Mid-American Power LLC, 38722–38723
Northwest Pipeline Corp., 38723
Oxbow Power Marketing, Inc., 38723
Pacific Gas & Electric Co. et al., 38723–38726
Williams Natural Gas Co., 38726

Federal Highway Administration
NOTICES
Environmental statements; notice of intent:
Imperial County, CA, 38795

Federal Maritime Commission
NOTICES
Agreements filed, etc., 38736–38737
Casualty and nonperformance certificates:
Seabourn Cruise Line Ltd. et al., 38737
Freight forwarder licenses:
Prestige Trade Services, Inc., et al., 38736
Westrans Air Express et al., 38736

Federal Railroad Administration
RULES
Railroad safety enforcement procedures:
Hazardous materials regulations, violations; penalty guidelines; policy statement, 38644–38656

Federal Reserve System
NOTICES
Banks and bank holding companies:
Formations, acquisitions, and mergers, 38737–38738
Permissible nonbanking activities, 38738

Federal Trade Commission
NOTICES
Prohibited trade practices:
Home Shopping Network, Inc., et al., 38738–38741
Koninklijke Ahold NV et al., 38741–38747
Syncronys Softcorp et al., 38747–38750

Fish and Wildlife Service
PROPOSED RULES
Endangered and threatened species:
Barton Springs salamander, 38702–38703

Food Safety and Inspection Service
RULES
Meat and poultry inspection:
Pathogen reduction; hazard analysis and critical control point (HAACP) systems, 38806–38989

Foreign Agricultural Service
NOTICES
Import quotas and fees:
Dairy import licenses, 38705

Foreign-Trade Zones Board
NOTICES
Applications, hearings, determinations, etc.:
Louisiana
Shell Oil Co.; oil refinery/petrochemical complex, 38710
Pennsylvania
Sun Co. Inc.; oil refinery complex, 38710–38711
Texas
Exxon Corp.; oil refinery/petrochemical complex, 38711

Forest Service
NOTICES
Environmental statements; availability, etc.:
Bitterroot National Forest, MT, 38705–38709
Wasatch-Cache National Forest, UT, 38709–38710
Meetings:
Intergovernmental Advisory Committee, 38710

General Services Administration
NOTICES
Privacy Act:
Systems of records, 38750–38753

Geological Survey
NOTICES
Meetings:
Federal Geographic Data Committee—
Facilities working group, 38784

Harry S. Truman Scholarship Foundation
NOTICES
Agency information collection activities:
Proposed collection; comment request, 38753–38754

Health and Human Services Department
See Agency for Toxic Substances and Disease Registry
See Children and Families Administration

Housing and Urban Development Department
NOTICES
Agency information collection activities:
Proposed collection; comment request, 38757–38780

Interior Department
See Fish and Wildlife Service
See Geological Survey
See Land Management Bureau
See Minerals Management Service
See National Park Service

International Development Cooperation Agency
See Agency for International Development

International Trade Administration
NOTICES
Antidumping:
Silicon metal from—
Argentina, 38711–38714
Best Global Practices Award; implementation, 38714–38715

Justice Department
See Parole Commission

Labor Department
See Mine Safety and Health Administration

Land Management Bureau
NOTICES
Agency information collection activities:
Submission for OMB review; comment request, 38781
Environmental statements; availability, etc.:
Grass Creek Planning Area, Bighorn Basin Resource Area, WY, 38781–38782
Public land orders:
Montana, 38782–38783
New Mexico, 38783
Washington, 38783–38784

Minerals Management Service
NOTICES
Royalty management program:
Electronic Data Interchange (EDI)—
Presentation, 38784

Mine Safety and Health Administration
NOTICES
Safety standard petitions:
Pilgrim Mining Co., Inc., et al., 38785–38788

National Highway Traffic Safety Administration
NOTICES
Motor vehicle safety standards:
Nonconforming vehicles—
Importation eligibility; determinations, 38795–38797

National Oceanic and Atmospheric Administration
RULES
Fishery conservation and management:
Gulf of Alaska groundfish, 38656
Tuna, Atlantic bluefin fisheries, 38656
PROPOSED RULES
International Code of Conduct for Responsible Fisheries implementation plan; availability, 38703–38704
NOTICES
Marine mammals:
Incidental taking; authorization letters, etc.—
BP Exploration; offshore seismic activities in Beaufort Sea, 38715–38717
Meetings:
Mid-Atlantic Fishery Management Council, 38717

National Park Service
NOTICES
Meetings:
Maine Acadian Culture Preservation Commission, 38784–38785

Nuclear Regulatory Commission
NOTICES
Environmental statements; availability, etc.:
Shieldalloy Metallurgical Corp., 38789–38790
Applications, hearings, determinations, etc.:
Kerr-McGee Corp., 38788–38789
Northern States Power Co., 38789

Office of United States Trade Representative
See Trade Representative, Office of United States

Parole Commission
RULES
Federal prisoners; paroling and releasing, etc.:
Transfer treaty cases, 38569–38570

Presidential Documents
ADMINISTRATIVE ORDERS
Debt amount owed to U.S. by poorest countries, reduction; authority delegation to Secretary of Treasury (Memorandum of July 8, 1996), 38563

Public Health Service
See Agency for Toxic Substances and Disease Registry

Research and Special Programs Administration
RULES
Hazardous materials:
Hazardous materials transportation—
Rail requirements; RESIDUE placard discontinuance, 38642–38644
PROPOSED RULES
Hazardous materials:
Intrastate shippers and carriers; regulations compliance
Docket access during Dockets Unit temporary closure, 38702
NOTICES
Meetings:
Hazardous materials safety program; regulatory review and improved customer service, 38797–38798

Organization, functions, and authority delegations:
Dockets Unit; temporary closure, 38798

Securities and Exchange Commission
NOTICES
Meetings; Sunshine Act, 38793
Self-regulatory organizations; proposed rule changes:
Chicago Board Options Exchange, Inc., 38792–38793

Small Business Administration
NOTICES
Disaster loan areas:
Florida, 38793

Social Security Administration
NOTICES
Privacy Act:
Computer matching programs, 38793–38794

Surface Transportation Board
NOTICES
Railroad operation, acquisition, construction, etc.:
Northern Vermont Railroad Co. Inc., 38798–38799
St. Louis Southwestern Railway Co., 38799
Union Pacific Railroad Co., 38799
Railroad services abandonment:
Consolidated Rail Corp., 38799–38800
South Carolina Central Railroad, 38800–38801

Textile Agreements Implementation Committee
See Committee for the Implementation of Textile Agreements

Toxic Substances and Disease Registry Agency
See Agency for Toxic Substances and Disease Registry

Trade Representative, Office of United States
NOTICES
World Trade Organization:
Pakistan; pharmaceuticals and agricultural chemicals patent protection; settlement proceeding, 38791

Transportation Department
See Federal Aviation Administration
See Federal Highway Administration
See Federal Railroad Administration
See National Highway Traffic Safety Administration
See Research and Special Programs Administration
See Surface Transportation Board
NOTICES
Aviation proceedings:
Agreements filed; weekly receipts, 38794–38795

Treasury Department
See Customs Service
NOTICES
Agency information collection activities:
Submission for OMB review; comment request, 38801–38803

Truman, Harry S., Scholarship Foundation
See Harry S. Truman Scholarship Foundation

Veterans Affairs Department
RULES
Part-time career employment program, 38570–38571

Separate Parts In This Issue

Part II
Department of Agriculture, Food Safety and Inspection Service, 38806–38989

Part III
Department of Transportation, Federal Aviation Administration, 38992–39021

Part IV
Environmental Protection Agency, 39024–39029

Part V
Environmental Protection Agency, 39032–39037

Reader Aids
Additional information, including a list of public laws, telephone numbers, reminders, and finding aids, appears in the Reader Aids section at the end of this issue.

Electronic Bulletin Board
Free Electronic Bulletin Board service for Public Law numbers, Federal Register finding aids, and a list of documents on public inspection is available on 202–275–1538 or 275–0920.

CFR PARTS AFFECTED IN THIS ISSUE

A cumulative list of the parts affected this month can be found in the Reader Aids section at the end of this issue.

3 CFR

Administrative Orders:

Memorandum:
July 8, 1996 38563

7 CFR

Proposed Rules:

1 38657

9 CFR

304 38806
308 38806
310 38806
320 38806
327 38806
381 38806
416 38806
417 38806

14 CFR

Proposed Rules:

440 38992

18 CFR

154 38565
346 38567

Proposed Rules:

35 38663

28 CFR

2 38569

38 CFR

1 38570

40 CFR

51 (2 documents) 38571, 39032
52 (8 documents) 38571, 38574, 38577, 38582, 38590, 38591, 38594, 38597
372 38600

Proposed Rules:

52 (4 documents) 38664, 38682, 38683
148 38684
261 38684
268 38684
271 38684

47 CFR

20 38605
52 38605

Proposed Rules:

20 38687
24 38693
52 38687

48 CFR

Proposed Rules:

917 38701
950 38701
952 38701
970 38701

49 CFR

172 38642
209 38644

Proposed Rules:

171 38702
173 38702
180 38702

50 CFR

285 38655
679 38656

Proposed Rules:

17 38702
300 38703

Federal Register
Vol. 61, No. 144
Thursday, July 25, 1996

Presidential Documents

Title 3—

The President

Memorandum of July 8, 1996

Delegation of Authority With Respect to Debt Reduction for the Poorest Countries

Memorandum for the Secretary of the Treasury

By the authority vested in me as President by the Constitution and laws of the United States of America, including section 570 of the Foreign Operations, Export Financing, and Related Programs Appropriations Act, 1996 (Public Law 104–107) (the ''FY 1996 Act''), section 561 of the Foreign Operations, Export Financing, and Related Programs Appropriations Act, 1995 (Public Law 103–306) (the ''FY 1995 Act''), and section 301 of title 3 of the United States Code, I hereby delegate to the Secretary of the Treasury, in consultation with the Secretary of State and the Secretary of Defense, the functions, authorities, and duties conferred upon the President by section 570(a) of the FY 1996 Act, by section 561(a) of the FY 1995 Act, and by any hereafter-enacted provision of law that is the same or substantially the same as section 570(a) of the FY 1996 Act and section 561(a) of FY 1995 Act.

The Secretary of the Treasury is authorized and directed to publish this memorandum in the Federal Register.

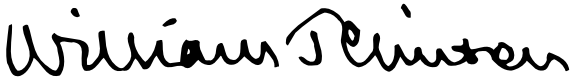

THE WHITE HOUSE,
Washington, July 8, 1996.

[FR Doc. 96–19069
Filed 7–24–96; 8:45 am]
Billing code 4810–31–M

Rules and Regulations

Federal Register
Vol. 61, No. 144
Thursday, July 25, 1996

This section of the FEDERAL REGISTER contains regulatory documents having general applicability and legal effect, most of which are keyed to and codified in the Code of Federal Regulations, which is published under 50 titles pursuant to 44 U.S.C. 1510.

The Code of Federal Regulations is sold by the Superintendent of Documents. Prices of new books are listed in the first FEDERAL REGISTER issue of each week.

DEPARTMENT OF ENERGY

Federal Energy Regulatory Commission

18 CFR Part 154

[Docket No. RM95–3–002; Order No. 582]

Filing and Reporting Requirements for Interstate Natural Gas Company Rate Schedules and Tariffs

Issued July 19, 1996.

AGENCY: Federal Energy Regulatory Commission, DOE.

ACTION: Final rule; order on clarification.

SUMMARY: The Federal Energy Regulatory Commission is issuing an order clarifying Order No. 582, the final rule amending part 154 of the Commission's regulations under the Natural Gas Act. Pursuant to Order No. 582, two working groups were established to resolve electronic filing issues. The order on clarification makes clear that formulas contained in an electronic filing must be manipulable; it also clarifies that if there are no underlying software ''links'' used to develop a spreadsheet, links need not be created for a filing.

EFFECTIVE DATE: July 19, 1996.

FOR FURTHER INFORMATION CONTACT: Richard A. White, Office of the General Counsel, Federal Energy Regulatory Commission, 888 First Street, N.E., Washington, DC 20426, (202) 208–0491.

SUPPLEMENTARY INFORMATION: In addition to publishing the full text of this document in the Federal Register, the Commission also provides all interested persons an opportunity to inspect or copy the contents of this document during normal business hours at 888 First Street, N.E., Washington, DC 20426.

The Commission Issuance Posting System (CIPS), an electronic bulletin board service, provides access to the texts of formal documents issued by the Commission. CIPS is available at no charge to the user and may be accessed using a personal computer with a modem by dialing (202) 208–1397 if dialing locally or 1–800–856–3720 if dialing long distance. To access CIPS, set your communications software to use 19200, 14400, 12000, 9600, 7200, 4800, 2400, or 1200bps, full duplex, no parity, 8 data bits, and 1 stop bit. The full text of this document will be available on CIPS indefinitely in ASCII and WordPerfect 5.1 format for one year. The complete text on diskette in WordPerfect format may also be purchased from the Commission's copy contractor, La Dorn Systems Corporation, also located in the Public Reference Room at 888 First Street, N.E., Washington, DC 20426.

Before Commissioners: Elizabeth Anne Moler, Chair; Vicky A. Bailey, James J. Hoecker, William L. Massey, and Donald F. Santa, Jr.

Filing and Reporting Requirements for Interstate Natural Gas Company Rate Schedules and Tariffs

Docket No. RM95–3–002

Order on Clarification

Issued July 19, 1996.

This order responds to requests for clarification of Order No. 582 [1] filed by Associated Gas Distributors (AGD) and The Process Gas Consumer Group, the America Iron and Steel Institute, and the Georgia Industrial Group (Industrials).[2]

I. Background

Order No. 582 updated procedural rules governing the form and composition of interstate natural gas pipeline tariffs and the filing of rates and charges for the transportation of natural gas in interstate commerce under sections 4 and 5 of the Natural Gas Act (NGA) and section 311 of the Natural Gas Policy Act. Among other things, Order No. 582 directed Commission staff to convene informal conferences with natural gas industry members to resolve outstanding electronic filing issues. Two working groups were established—one to complete work on Form Nos. 2, 2A and 11 and one to complete work on rate case filings. The working groups met on December 1 and 12, 1995, February 7, 1996 and February 8, 1996.

Questions have arisen in the working groups concerning the use of ''password protection'' [3] and ''links.'' [4]

II. Password Protection

AGD requests clarification that (1) in requiring pipelines to file native spreadsheet formats with links and formulas, the Commission intended to provide pipeline customers and other interested parties with a useful tool to fully analyze the pipeline's filing, and (2) any efforts by the pipelines to undermine this intent—such as the use of password protection to limit the usefulness of electronic data—are prohibited as inconsistent with the Commission's orders.

The Industrials request clarification that Statements H, I and J be fully accessible to the public, with spreadsheet formulas and links intact. Also, the Industrials request clarification that the issue of password protection (or any other form of security) was intended to be addressed by the Working Group on Filings, not as a means to block such public access to the data and formulas, but to ensure public participation in rate cases while accommodating the legitimate needs of pipelines to ensure the security of confidential data and the integrity of the formulas.

a. Positions of Participants

The issue presented here is whether Order No. 582 requires that the formulas contained in the electronic filing be mere readable symbols, as in a hard

[1] Filing and Reporting Requirements for Interstate Natural Gas Companies Rate Schedules and Tariffs, Order No. 582, 60 FR 52960 (October 11, 1995), II FERC Stats. & Regs. ¶ 19,100–19,183 (1995) (regulatory text), III FERC Stats. & Regs. ¶ 31,025 (1995) (preamble).

[2] The Industrials further request that the Commission give additional directions to the Working Group, as may be required in light of these clarifications.

[3] Present technology allows formulas used in preparing a rate filing to be embedded into the electronic file such that a user may have the software perform the calculations using alternate factors. Spreadsheet software also commonly provides the option of assigning password protection to a file. Such protection allows subsequent users without the password to have ''read only'' access to the file; that is, the subsequent user is able to read the file and view formulas, but cannot modify or copy the file.

[4] A link is a software feature that allows a user to insert or adjust an item once and have the new or adjusted item automatically inserted in other designated locations.

copy, or should be manipulable such that pipeline customers or other interested parties may analyze such files by inserting different factors. That is, does Order No. 582 provide for an electronic tool for analyzing the pipeline's filing that is not provided by the hard copy.

Industrials state that password protection must be discussed in terms of balancing the pipeline's need for security and the public's right to utilize the spreadsheet formulas and data. Industrials argue that only such balancing will ensure meaningful public participation in pipeline rate cases.

Industrials argue that the password protection issue was delegated to the Working Groups to determine how the pipeline's legitimate desire to prevent the release of confidential data and to protect the integrity of formulas could be accommodated in the Commission's rule allowing full accessibility to the data and formulas. Industrials point out that the Commission explained that the electronic filing could always be checked against the paper copy filed by the pipeline for security purposes to ensure that the filing's data and formulas have not been tampered with.[5]

Industrials state that the ready electronic availability of spreadsheet data and formulas will greatly ease the burden on intervenors to analyze a pipeline's rate filing. Because intervenors and protestors face a short period within which to file interventions and protests, Industrials state that such facilitation is necessary to allow the interventions and protests to be meaningful.[6] Unless the filed spreadsheet data is served in a manipulable version, intervenors will still have to re-input the data and formulas themselves. Industrials state that this task is extremely time-consuming and would lead to continued delays in analysis and development of positions. Industrials state that intervenors would be deprived of the opportunity to bring matters to the attention of the Commission in their interventions, which matters might be capable of summary disposition in the suspension order or other fast track decision making. Further, Industrials state, re-inputting data almost inevitably will lead to the introduction of errors. This is expensive and redundant. Industrials state that, unless a non-password protected version of all spreadsheet data is served on all parties as part of the original filing, most of the time savings and efficiency gains achieved by the Commission's orders will be undermined.

The Industrials state that, though the pipelines need to file a fixed version of spreadsheet data that conforms to the paper copy to ensure the accuracy of the data and integrity of the formulas, a blanket denial of access to the data and formulas is not the solution. Industrials state that one solution is to require the filing of two sets of electronic spreadsheet data and formulas: One set password-protected for security purposes, and the other, without such password protection, available to the public for use in evaluating the filing. Industrials state that its proposed solution balances the interests of all parties involved.

AGD argues that if a pipeline imposes password protection on its electronic rate filings, such files will be of value only in understanding the logic underlying the pipeline's proposed rate design. AGD states that such files will not allow the pipeline's customers or other interested parties to fully analyze such files or even to copy data.

b. Discussion

The aspect of ''protecting'' data was discussed in two sections of Order No. 582. In the section titled ''Dissemination of Data by the Commission,'' the Commission stated:

> Password protection or other forms of security should be discussed at the conference. However, as long as a paper copy is available, there is a reliable way to check the accuracy of the electronic data. Both the electronic data and the paper version of the filing are part of the official filing and should contain the same information.[7]

In the section titled ''Appropriate Format for Numeric Data,'' the Commission stated:

> One of the stated goals of the conference was to ensure that all spreadsheets contain the underlying formulas and links. Delimited formats are not capable of transmitting formulas and equations. The Commission agrees with the parties arguing for a spreadsheet format where the formulas in the workpaper or statement are important to the understanding of the pipeline's filing. To be useful, the data, required in subpart D, by Statements I and J and the state tax formulations in Statement H, must be received with the formulas included. These formulas are necessary to understand the pipeline's position with respect to cost allocation and rate design. In section 4 rate cases, the Commission has routinely obtained the formulas through data requests asking that the information be in spreadsheet form. The requirement that the initial filing be in spreadsheet format avoids the burden of having the same data submitted once as a tab delimited file and again, in response to a data request, in spreadsheet form, in order to capture the formulas. Accordingly, Statements I and J and a portion of H, containing state tax formulations submitted pursuant to subpart D, must be filed in the same format generated by the spreadsheet software used to create the statement or workpaper. These spreadsheets must include all the formulas and all links to other spreadsheets filed in the same rate case.[8]

The first passage above clearly directs staff to develop ways to assure the accuracy of data filed electronically: to protect against the accidental or intentional alteration of a filing. However, when the Commission grants confidential treatment of data, the data must not be made public and must not be in the public electronic data bases. Methods for maintaining the confidentiality of information filed electronically for which confidential treatment has been sought and granted must be addressed at future meetings.

The Industrials' discussion of the need for non-password protected files to achieve time-saving and efficiency is consistent with the purposes of Order No. 582. The formulas are critical for Staff and intervenors to understand the pipeline's position on cost allocation and rate design.[9] The Commission intended that spreadsheet data, and underlying formulas and links to other spreadsheets, be accessible to the public. In Order No. 582, the Commission agreed with parties that having PC-compatible spreadsheet files with formulas and linkages intact available to customers and intervenors will speed the processing of rate cases and allow many issues to be resolved in the suspension order.[10] Requiring parties, including staff, to input all the figures from the rate case and spend weeks and rounds of discovery to recreate the pipeline's computations is grossly inefficient and unduly burdensome. Receiving the rate case in a manipulable format is critical given the 12-day period for comment and protest.

The Commission clarifies its intent to utilize the electronic format to facilitate more efficient and speedy analyses of rate filings by requiring that all formulas be manipulable as described herein.

III. Links

As noted above, Order No. 582 requires pipelines to submit their filings in native spreadsheet format with links

[5] III FERC Stats. & Regs. at 31,437.

[6] In light of the short time period in which the Commission and interested parties have to review the filing, several items have been added to speed processing of the filing and minimize additional requests for information. III FERC Stats. & Regs. at 31,388.

[7] III FERC Stats. & Regs. at 31,437.

[8] III FERC Stats. & Regs. at 31,435.

[9] III FERC Stats. & Regs. at 31,435.

[10] III FERC Stats. & Regs. at 31,434–5.

and formulas. The issue has been raised as to whether a pipeline that prepares two separate files for a Statement, without links between such files (perhaps because the two files were prepared by different individuals) must, nonetheless, create such links for the filing.

AGD states that by separating a filing (e.g., Statements J and K) into multiple files, pipelines would minimize the usefulness of such information and deprive interested parties of the ability to engage in meaningful analysis. AGD requests clarification that pipelines cannot avoid the requirements of Order No. 582—in particular, the requirement that pipelines must submit rate filings in native spreadsheet format with links and formulas—by submitting the relevant information in separate files without links.

The Commission does not agree with AGD that the absence of such links will deprive interested parties of the ability to engage in meaningful analysis. Upon examination, a reviewer will be able to locate links between two or more spreadsheets whether or not the link is electronic. If there is no direct link between two spreadsheets showing progressive calculations, an explanation of the relationship between the two spreadsheets is required.[11] The reviewer's analysis will not be significantly compromised because two spreadsheets showing progressive calculations are not linked electronically.

A pipeline must support its rate adjustments with step-by-step mathematical calculations accompanied by narrative explanations sufficient to permit the Commission and interested parties to duplicate the company's calculations.[12] This may be done, in part, by placing links in the spreadsheets or it may be done other ways. AGD has provided insufficient reasons for limiting the pipelines' options when complying with the regulations.

If a pipeline creates a link in the preparation of its rate filing, that link may not be severed prior to submitting the rate filing to the Commission. The Commission strongly encourages the use of electronic links. However, the Commission clarifies that if there are no underlying links used to develop the spreadsheet, as in the example above, links need not be created for the filing.

The Commission orders:

The requests for clarification of Order No. 582, the final rule issued in this docket on September 28, 1995, are granted and denied as discussed in the text of this order.

By the Commission.

Lois D. Cashell,

Secretary.

[FR Doc. 96–18899 Filed 7–24–96; 8:45 am]

BILLING CODE 6717–01–P

[11] Section 154.201(b)(5) requires that "[w]here workpapers show progressive calculations, any discontinuity between one working paper and another must be explained."

[12] 18 CFR 154.201(b)(2).

Federal Energy Regulatory Commission

18 CFR Part 346

[Docket No. RM96–10–000; Order No. 588]

Oil Pipeline Cost-of-Service Filing Requirements

Issued July 19, 1996.

AGENCY: Federal Energy Regulatory Commission.

ACTION: Final rule.

SUMMARY: The Federal Energy Regulatory Commission (Commission) is amending Part 346 of its regulations to make the cost-of-service filing requirements of that Part applicable to the Trans-Alaska Pipeline System (TAPS) carriers and carriers delivering oil directly or indirectly to TAPS. These carriers were inadvertently excluded from the streamlined procedural rules in Part 346 required by the Energy Policy Act of 1992.

EFFECTIVE DATE: August 26, 1996.

FOR FURTHER INFORMATION CONTACT: Jacob Silverman, Office of the General Counsel Federal Energy Regulatory Commission, 888 First Street, NE., Washington, DC 20426, Telephone: (202) 208–2078.

SUPPLEMENTARY INFORMATION: In addition to publishing the full text of this document of the Federal Register, the Commission also provides all interested persons an opportunity to inspect or copy the contents of this document during normal business hours in Room 2–A, 888 First Street, NE., Washington, DC 20426.

The Commission Issuance Posting System (CIPS), an electronic bulletin board service, provides access to the texts of formal documents issued by the Commission. CIPS is available at no charge to the user and may be accessed using a personal computer with a modem by dialing (202) 208–1397 if dialing locally or 1–800 856–3920 if dialing long distance. To access CIPS, set your communication software to 19200, 14400, 12000, 9600, 7200, 4800, 2400 or 1200bps, full duplex, no parity, 8 data bits, and 1 stop bit. The full text of this document will be available on CIPS indefinitely in ASCII and WordPerfect 5.1 format for one year. The complete text on diskette in WordPerfect format may also be purchased from the Commission's copy contractor, La Dorn Systems Corporation, also located in Room 2–A, 888 First Street, NE., Washington, DC 20426.

The Commission's bulletin board system can also be accessed through the FedWorld system directly by modem or through the Internet. To access the FedWorld system by modem:

Dial (703) 321–3339 and logon to the FedWorld system.

1/2 After Logging on, type: /go FERC

To access the FedWorld system, through the Internet:

1/2 Telnet to : Fedworld. gov

1/2 Select the option: [1] FedWorld

The Federal Energy Regulatory Commission (Commission) is revising Part 346 of its regulations to make the cost-of-service filing requirements of that Part applicable to the Trans-Alaska Pipeline System (TAPS) and carriers delivering oil directly or indirectly to TAPS. The revision is necessary to correct the inadvertent exclusion of these carriers from the procedural requirements of Part 346.

I. Background

The Commission issued Order No. 561[1] to comply with the Energy Policy Act of 1992 (Act of 1992),[2] which required the Commission to establish a simplified and generally applicable methodology for oil pipelines and to streamline its procedures relating to oil pipeline rates. The Act of 1992 excluded TAPS from its provisions for ratemaking purposes. Thus, Order No. 561 stated that TAPS and the other excluded pipelines would continue to be governed by their existing rate methodologies, but also would be subject to the Commission's new procedural rules. Thereafter, as a companion to Order No. 561, the Commission issued Order No. 571, establishing in Part 346 of its regulations cost-of-service filing requirements for oil pipelines.[3] These procedural requirements include all the information that is necessary to support a rate filing under the Opinion No. 154–

[1] Revisions to Oil Pipeline Regulations Pursuant to the Energy Policy Act of 1992, Order No. 561, FERC Statutes & Regulations ¶ 30,985 (1993); Order on Rehearing, Order No. 561–A, FERC Statutes & Regulations ¶ 31,000 (1994).

[2] 42 U.S.C. 7172 note (West Supp. 1993).

[3] Cost-of-Service Reporting and Filing Requirements for Oil Pipelines, FERC Statutes & Regulations ¶ 31,006 (1994).

B methodology.[4] The existing provisions of Part 346, however, do not apply to TAPS or its feeder lines.[5]

It has always been the Commission's intent to exclude TAPS and its feeder lines only from the simplified ratemaking methodology adopted in Order No. 561, not from the streamlined procedural rules required by the Act of 1992. Accordingly, on April 29, 1996, the Commission issued a Notice of Proposed Rulemaking (NOPR) in this docket [6] to amend Part 346 to make it applicable to TAPS and its feeder lines.

The TAPS Carriers [7] were the only parties filing comments in response to the NOPR.

II. Public Reporting Burden

The Commission estimates the public reporting burden for the collection of information under the final rule will remain unchanged for rate filings, since what the Commission is codifying as the information to be provided is that which the Commission's staff routinely has requested of oil pipelines for cost-of-service rate filings in the past. The information will be collected on FERC–550, ''Oil Pipeline Rates: Tariff Filings.'' [8] This estimate includes the time for reviewing instructions, researching existing data sources, gathering and maintaining the data needed, and completing and reviewing the collection of information. The current annual reporting burden associated with this information collection requirement was described in Order No. 571 and included the burden attributable to all oil pipelines, including TAPS and its feeder lines, as follows: FERC–550: 5,350 hours, 535 responses, and 140 respondents.

Comments regarding this burden estimate or any other aspect of this collection of information, including suggestions for reducing this burden, can be sent to the Federal Energy Regulatory Commission, 888 First Street, N.E., Washington, DC 20426 [Attention: Michael Miller, Information Services Division, (202) 208–1415]; and to the Office of Information and Regulatory Affairs of OMB (Attention: Desk Officer for Federal Energy Regulatory Commission), FAX: (202) 395–5167.

III. Discussion

As the NOPR explained, since TAPS was excluded from the ratemaking provisions of the Act of 1992, Order No. 561 specifically stated: [9]

> for ratemaking purposes, TAPS and those excluded pipelines [the TAPS feeder lines] will continue to be regulated under the ratemaking standards that are currently in effect. However, it is the Commission's judgment that such exclusion [of TAPS and its feeder lines from the provisions of the Energy Policy Act of 1992] was intended to apply only to the simplified and generally applicable rate methodology, not to the procedural rules that the Act of 1992 required the Commission to consider. Otherwise, the Commission would be required to enforce one set of procedural rules for TAPS and excluded pipelines, and another for all other pipelines under its jurisdiction under the ICA. This would not be consistent with Congress' intent for the Commission to streamline its procedures for oil pipelines.

As the NOPR pointed out, the Commission meant the procedural rules of Part 346 to apply to TAPS and its feeder lines. This is the interpretation that is consistent with the mandate of the Act of 1992 that the Commission streamline its procedures in order to avoid unnecessary regulatory costs and delay, and with the Commission's explicit desire to enforce one set of the procedural rules for all pipelines.

The revision adopted here will require the TAPS Carriers and the TAPS feeder carriers to comply with the cost-of-service filing requirements of Part 346 when they seek to establish rates under the Opinion No. 154–B methodology. As the NOPR explained, these requirements are no more than a codification of the information that these carriers now must provide routinely in response to the Commission staff's requests for information to support their cost-of-service rate filings. Thus, it should not create any additional burden for carriers making cost-of-service filings. Inclusion of cost-of-service supporting information with carriers' initial filings, rather than at a later time in the regulatory process, also will satisfy the requirement of the Act of 1992 to avoid unnecessary regulatory costs and delays.

In their comments, the TAPS Carriers state that they do not oppose the proposed revision to the extent it simply seeks to make the cost-of-service filing requirements consistent as between excluded and non-excluded oil pipelines. However, they seek to clarify that nothing in the proposed revision is intended to undermine or supplant the Commission-approved settlements already in place for TAPS, and certain TAPS feeder pipelines, including the TAPS Settlement Agreement. Thus, the TAPS Carriers seek assurance that, consistent with the Commission's discussion in Order Nos. 561 and 561–A, excluded pipelines, such as TAPS, can continue to file tariffs that are within the ceilings imposed by existing settlements without requiring a separate Opinion No. 154–B submission.

The TAPS Carriers state that there is a possible ambiguity in the proposed language in the NOPR that might require TAPS Carriers that make filings under an existing settlement methodology, such as the TAPS Settlement methodology, to also include the Opinion No. 154–B schedules specified in section 346.2. The TAPS Carriers assert that no meaningful purpose would be served by such filings, since the TAPS Settlement Agreement already imposes cost-based ceilings on the TAPS rates. The TAPS Carriers have proposed language that removes that ambiguity by making clear that the filing requirement under a Commission-approved settlement remains the same.

In response to the TAPS Carriers' concern, the Commission will include language in the revised regulations to make it clear that the TAPS Carriers and the TAPS feeder carriers need file the Opinion No. 154–B schedules specified in section 346.2 only if they make filings to establish or change rates under the Opinion No. 154–B methodology, and not when they file pursuant to a Commission-approved settlement.

IV. Environmental Analysis

The Commission is required to prepare an Environmental Assessment or an Environmental Impact Statement for any action that may have a significant adverse effect on the human environment.[10] The Commission has categorically excluded certain actions from these requirements as not having a significant effect on the human environment.[11] The action proposed here is procedural in nature and therefore falls within the categorical exclusions provided in the Commission's regulations.[12] Therefore, neither an environmental impact statement nor an environmental

[4] Williams Pipeline Company, 31 FERC ¶ 61,377 (1985).

[5] See, Milne Point Pipeline Company, 75 FERC ¶ 61,050 (1996).

[6] Oil Pipeline Cost-of-Service Filing Requirements, FERC Statutes & Regulations ¶ 32,518, 61 FR 19878 (May 3, 1996).

[7] The TAPS Carriers, each of which owns an undivided joint interest in the Trans Alaska Pipeline System (TAPS), are: Amerada Hess Pipeline Corporation, ARCO Transportation Alaska, Inc., BP Pipelines (Alaska) Inc., Exxon Pipeline Company, Mobil Alaska Pipeline Company, Phillips Alaska Pipeline Corporation and Unocal Pipeline Company.

[8] FERC–550 is the designation covering oil pipeline tariff filings made to the Commission.

[9] FERC Statutes & Regulations ¶ 30,985 at 30,961.

[10] Order No. 486, Regulations Implementing the National Environmental Policy Act, 52 FR 47897 (Dec. 17, 1987), FERC Statutes & Regulations (Regulations Preambles 1986–1990) ¶ 30,783 (1987).

[11] 18 CFR 380.4.

[12] See, 18 CFR 380.4(a)(2)(ii).

assessment is necessary, and neither will be prepared in this rulemaking.

V. Regulatory Flexibility Act Certification

The Regulatory Flexibility Act[13] generally requires the Commission to describe the impact that a proposed rule would have on small entities or to certify that the rule will not have a significant economic impact on a substantial number of small entities. An analysis is not required if a proposed rule will not have such an impact.[14]

Pursuant to section 605(b), the Commission certifies that the proposed rules and amendments, if promulgated, will not have a significant adverse economic impact on a substantial number of small entities.

VI. Information Collection Requirements

Office of Management and Budget (OMB) regulations require OMB to approve certain information collection requirements imposed by an agency.[15] The information collection requirements in the final rule are contained in FERC–550 ''Oil Pipeline Rates: Tariff filing'' (1902–0089).

The Commission's Office of Pipeline Regulation uses the data collected in these information requirements filings to investigate the rates charged by oil pipeline companies subject to its jurisdiction, to determine the reasonableness of rates, and when appropriate, prescribe just and reasonable rates.

The final rule will not change the reporting requirements of FERC–550. This rule therefore is not subject to OMB review. The Commission is submitting a copy of the proposed rule to OMB for information purposes. Interested persons may obtain information on these reporting requirements by contacting the Federal Energy Regulatory Commission, 888 First Street, N.E., Washington, DC 20426 [Attention: Michael Miller, Information Services Division, (202) 208–1415]. Comments on the requirements of this rule can be sent to the Office of Information and Regulatory Affairs of OMB [Attention: Desk Officer for the Federal Energy Regulatory Commission].

VII. Effective Date

This final rule will be effective August 26, 1996. The Commission has determined, with the concurrence of the Administrator of the Office of Information and Regulatory Affairs of OMB, that this rule is not a ''major rule'' as defined in section 351 of the Small Business Regulatory Enforcement Fairness Act of 1996.

List of Subjects in 18 CFR Part 346

Pipelines, Reporting and recordkeeping requirements.

By the Commission.

Lois D. Cashell,

Secretary.

In consideration of the foregoing, Part 346, Chapter I, Title 18, Code of Federal Regulations, is amended, as set forth below.

PART 346—OIL PIPELINE COST-OF-SERVICE FILING REQUIREMENTS

1. The authority citation for Part 346 continues to read as follows:

Authority: 42 U.S.C. 7101–7352; 49 U.S.C. 60502; 49 App. U.S.C. 1–85.

2. Section 346.1 introductory text is revised to read as follows:

§ 346.1 Content of filing for cost-of-service rates.

A carrier that seeks to establish rates pursuant to § 342.2(a) of this chapter, or a carrier that seeks to change rates pursuant to § 342.4(a) of this chapter, or a carrier described in § 342.0(b) that seeks to establish or change rates by filing cost, revenue, and throughput data supporting such rates, other than pursuant to a Commission-approved settlement, must file:

* * * * *

3. Section 346.2 introductory text is revised to read as follows:

§ 346.2 Material in support of initial rates or change in rates.

A carrier that files for rates pursuant to § 342.2(a) or § 342.4(a) of this chapter, or a carrier described in § 342.0(b) that files to establish or change rates by filing cost, revenue, and throughput data supporting such rates, other than pursuant to a Commission-approved settlement, must file the following statements, schedules, and supporting workpapers. The statement, schedules, and workpapers must be based upon an appropriate test period.

* * * * *

[FR Doc. 96–18900 Filed 7–24–96; 8:45 am]

BILLING CODE 6717–01–P

[13] 5 U.S.C.601–612.

[14] 5 U.S.C. 605(b).

[15] 5 CFR 1320.11.

DEPARTMENT OF JUSTICE

Parole Commission

28 CFR Part 2

Paroling, Recommitting, and Supervising Federal Prisoners: Transfer Treaty Cases

AGENCY: United States Parole Commission, Justice.

ACTION: Final rule.

SUMMARY: The U.S. Parole Commission is amending its regulations on transfer treaty cases by reducing the number of hearing examiners required to conduct a hearing for a prisoner transferred to the United States pursuant to treaty. The number is reduced from two hearing examiners to one hearing examiner. The recommended decision of the hearing examiner shall be reviewed by the executive hearing examiner, and the Commission will not act upon the case until a panel recommendation consisting of two concurring examiner votes is obtained. This change will not otherwise affect the procedures followed at a special transferee hearing. This procedural rule is necessary for the Commission to operate within the substantially reduced Congressional appropriation anticipated for Fiscal Year 1997.

EFFECTIVE DATE: August 26, 1996.

FOR FURTHER INFORMATION CONTACT: Pamela A. Posch, Office of General Counsel, 5550 Friendship Blvd, Chevy Chase, Maryland 20815, Telephone (301) 492–5959.

SUPPLEMENTARY INFORMATION: This is a procedural rule change affecting only those prisoners who are transferred to the United States, pursuant to treaty, to serve a sentence imposed in the transferring country. For a prisoner who is serving a foreign sentence for a crime that was committed on or after November 1, 1987, the Parole Commission is obliged to conduct a special transferee hearing upon his return to the United States, and to determine a period of imprisonment and a period of supervised release, within the framework of the foreign sentence, according to the rules and guidelines of the U.S. Sentencing Commission. See 18 U.S.C. 4106A (1988).

Until now, the regulation governing such cases, 28 CFR 2.62, has required that special transferee hearings be conducted by panels of two hearing examiners. In all other hearings conducted by the Commission (including parole and parole revocation hearings for domestic prisoners) hearings are conducted by a single

examiner. The recommended decision of the hearing examiner is reviewed by the executive hearing examiner, and the Commission is presented with a panel recommendation pursuant to 28 CFR 2.23. The same procedure is now extended to special transferee hearings.

The Commission originally decided to require panel-conducted hearings for transfer treaty prisoners because of the complexity of sentencing guideline issues and the absence of any statutorily-authorized administrative remedy procedure. The determination of the Commission becomes subject to direct appeal to a United States Court of Appeals pursuant to 18 U.S.C. 4106A(b)(2)(A). However, the Commission has improved its pre-hearing assessment procedure, and has added a review by its Office of General Counsel before each case is submitted to the Commission for decision. These additional safeguards have reduced the possibility of error which diminishes the need for two hearing examiners to conduct each hearing. Moreover, the Commission anticipates a severely reduced Congressional appropriation for Fiscal Year 1997, and it can no longer afford to send panels of hearing examiners to conduct each special transferee hearing. With the additional safeguards described above, the Commission believes that the hearing and decision making process for transfer treaty prisoners will continue to be as error-free as possible.

Implementation

This procedural rule change will apply to all special transferee hearings conducted on or after the effective date shown above.

Executive Order 12866 and Regulatory Flexibility Statement:

The U.S. Parole Commission has determined that this rule is not a significant regulatory action for the purposes of Executive Order 12866, and the rule has, accordingly, not been reviewed by the Office of Management and Budget. The rule will not have a significant economic impact upon a substantial number of small entities within the meaning of the Regulatory Flexibility Act, 5 U.S.C. 605(b).

List of Subjects in 28 CFR Part 2

Administrative practice and procedure, Probation and parole, Prisoners.

The Final Rule

Accordingly, the U.S. Parole Commission makes the following changes to 28 CFR part 2:

(1) The authority citation for 28 CFR part 2 continues to read as follows:

Authority: 18 U.S.C. 4203(a)(1) and 4204(a)(6).

§ 2.62 [Amended]

(2) Section 2.62 is amended by substituting ''a hearing examiner'' for ''a panel of examiners'' in paragraph (h), introductory text; by substituting ''The examiner'' for ''The examiner panel'' in paragraph (h)(1) introductory text; by substituting ''The examiner'' for ''The examiner panel'' in paragraph (h)(5).

(3) Section § 2.62(h)(6) is revised to read as follows:

§ 2.62 Prisoners transferred pursuant to treaty.

* * * * *

(h) Hearing procedures. * * *

(6) The transferee shall be notified of the examiner's recommending findings of fact, and the examiner's recommended determination and reasons therefore, at the conclusion at the hearing. The case shall thereafter be reviewed by the Executive Hearing Examiner pursuant to § 2.23, and the Commission shall make its determination upon a panel recommendation.

* * * * *

Dated: July 12, 1996.

Edward F. Reilly, Jr.,

Chairman, U.S. Parole Commission.

[FR Doc. 96–18861 Filed 7–24–96; 8:45 am]

BILLING CODE 4410–01–P

DEPARTMENT OF VETERANS AFFAIRS

38 CFR Part 1

RIN 2900–AH75

Part-Time Career Employment Program

AGENCY: Department of Veterans Affairs.

ACTION: Final rule.

SUMMARY: The Department of Veterans Affairs (VA) pursuant to 5 U.S.C. 3402 is required to maintain a program for part-time career employment within VA. VA has established regulations concerning this mandate (38 CFR 1.891 through 1.897). These regulations currently require field stations to provide a manual report to VA Central Office semiannually containing information concerning the number of part-time permanent positions established during the reporting period and the number of conversions from full-time to part-time. The purpose of the report is to monitor progress in attaining part-time career employment goals. This requirement for field stations to provide a semiannual report is deleted since the same information is available through the automated personnel system. The part-time career employment program will be reviewed through regular employment reports to determine levels of part-time employment. This program will also be designated an item of special interest to be reviewed during personnel management reviews. The authority citation is also changed to state the correct citation.

EFFECTIVE DATE: July 25, 1996.

FOR FURTHER INFORMATION CONTACT: Ellen Kollar, Title 5 Staffing Division (054C), Employment and Training Service, Office of Human Resources Management, Office of Human Resources and Administration, Department of Veterans Affairs, 810 Vermont Avenue, NW., Washington, DC 20420, (202) 273–9748.

SUPPLEMENTARY INFORMATION:

Administrative Procedure Act

This final rule consists of nonsubstantive changes and, therefore, is not subject to the notice and comment, and effective date provisions of 5 U.S.C. 553.

Regulatory Flexibility Act

The Secretary certifies that this final rule will not have a significant economic impact on a substantial number of small entities as they are defined in the Regulatory Flexibility Act, 5 U.S.C. 601–612. This rule sets forth nonsubstantive changes. Therefore, pursuant to 5 U.S.C. 605(b), this amendment is exempt from the initial and final regulatory flexibility analysis requirements of sections 603 and 604.

List of Subjects in 38 CFR Part 1

Administrative practice and procedure, Archives and records, Cemeteries, Claims, Courts, Flags, Freedom of information, Government contracts, Government employees, Government property, Infants and children, Inventions and patents, Investigations, Parking, Penalties, Postal Service, Privacy, Reporting and recordkeeping requirements, Seals and insignia, Security measures, Wages.

Approved: July 17, 1996.

Jesse Brown,

Secretary of Veterans Affairs.

For the reasons set out in the preamble, 38 CFR part 1 is amended as set forth below:

PART 1—GENERAL PROVISIONS

1. The authority citation for part 1 continues to read as follows:

Authority: 38 U.S.C. 501(a), unless otherwise noted.

2. In § 1.891, the authority citation is revised to read as follows:

§ 1.891 Purpose of program.

* * * * *

(Authority: 5 U.S.C. 3401 note)

3. In §§ 1.892 through 1.894, the authority citations are revised to read as follows:

§ 1.892 Review of positions.

* * * * *

(Authority: 5 U.S.C. 3402)

§ 1.893 Establishing and converting part-time positions.

* * * * *

(Authority: 5 U.S.C. 3402)

§ 1.894 Annual goals and time tables.

* * * * *

(Authority: 5 U.S.C. 3402)

4. Section 1.895 is revised to read as follows:

§ 1.895 Review and evaluation.

The part-time career employment program will be reviewed through regular employment reports to determine levels of part-time employment. This program will also be designated an item of special interest to be reviewed during personnel management reviews.

(Authority: 5 U.S.C. 3402)

5. In §§ 1.896 and 1.897, the authority citations are revised to read as follow:

§ 1.896 Publicizing vacancies.

* * * * *

(Authority: 5 U.S.C. 3402)

§ 1.897 Exceptions.

* * * * *

(Authority: 5 U.S.C. 3402)

[FR Doc. 96–18871 Filed 7–24–96; 8:45 am]

BILLING CODE 8320–01–P

ENVIRONMENTAL PROTECTION AGENCY

40 CFR Part 52

[CA 057–0009a; FRL–5527–6]

Approval and Promulgation of Implementation Plans; California State Implementation Plan Revision, Kern County Air Pollution Control District, Placer County Air Pollution Control District, Ventura County Air Pollution Control District, and San Joaquin Valley Unified Air Pollution Control District

AGENCY: Environmental Protection Agency (EPA).

ACTION: Direct final rule.

SUMMARY: EPA is taking direct final action on revisions to the California State Implementation Plan (SIP). The revisions concern rules from the following Districts: Kern County Air Pollution Control District (KNCAPCD), Placer County Air Pollution Control District (PLCAPCD), Ventura County Air Pollution Control District (VTCAPCD), and San Joaquin Valley Unified Air Pollution Control District (SJVUAPCD). This approval action will incorporate these rules into the federally approved SIP. The intended effect of approving these rules is to regulate emissions of volatile organic compounds (VOCs) in accordance with the requirements of the Clean Air Act, as amended in 1990 (CAA or the Act). The revised rules control VOC emissions from surface coating of metal parts and products, semiconductor manufacturing, fugitive emissions of reactive organic compounds (ROC) at petroleum refineries and chemical plants, polyester resin material operations, and decontamination of soil. Thus, EPA is finalizing the approval of these revisions into the California SIP under provisions of the CAA regarding EPA action on SIP submittals, SIPs for national primary and secondary ambient air quality standards and plan requirements for nonattainment areas.

DATES: This action is effective on September 23, 1996 unless adverse or critical comments are received by August 26, 1996. If the effective date is delayed, a timely notice will be published in the Federal Register.

ADDRESSES: Copies of the rule revisions and EPA's evaluation report for each rule are available for public inspection at EPA's Region IX office during normal business hours. Copies of the submitted rule revisions are available for inspection at the following locations:

Rulemaking Section (A–5–3), Air and Toxics Division, U.S. Environmental Protection Agency, Region IX, 75 Hawthorne Street, San Francisco, CA 94105

Environmental Protection Agency, Air Docket (6102), 401 ''M'' Street, S.W., Washington, D.C. 20460

California Air Resources Board, Stationary Source Division, Rule Evaluation Section, 2020 ''L'' Street, Sacramento, CA 92123–1095

Kern County Air Pollution Control District, 2700 ''M'' Street, Suite 290, Bakersfield, CA 93301

Placer County Air Pollution Control District, 11464 B Avenue, Auburn, CA 95603

Ventura County Air Pollution Control District, 669 County Square Drive, Ventura, CA 93003

San Joaquin Valley Unified Air Pollution Control District, 1999 Tuolumne Street, Suite 200, Fresno, CA 93721

FOR FURTHER INFORMATION CONTACT: Daniel A. Meer, Chief, Rulemaking Section (A–5–3), Air and Toxics Division, U.S. Environmental Protection Agency, Region IX, 75 Hawthorne Street, San Francisco, CA 94105, Telephone: (415) 744–1185.

SUPPLEMENTARY INFORMATION:

Applicability

The rules being approved into the California SIP include: KNCAPCD's Rule 410.4, Surface Coating of Metal Parts and Products; PLCAPCD's Rule 244, Semiconductor Manufacturing Operations; VTCAPCD's Rules 74.7, Fugitive Emissions of Reactive Organic Compounds (ROC) at Petroleum Refineries and Chemical Plants, and 74.14, Polyester Resin Material Operations; and SJVUAPCD's Rule 4651, Volatile Organic Compound Emissions from Decontamination of Soil. These rules were submitted by the California Air Resources Board (CARB) to EPA on May 25, 1995 (410.4), May 24, 1995 (244), March 26, 1996 (74.7), September 14, 1992 (74.14), and December 22, 1994 (4651).

Background

On March 3, 1978, EPA promulgated a list of ozone nonattainment areas under the provisions of the Clean Air Act, as amended in 1977 (1977 Act or pre-amended Act), that included the San Joaquin Valley Air Basin, Ventura County and the Sacramento Metro Area, which includes a portion of Placer County. 43 FR 8964, 40 CFR 81.305. On May 26, 1988, EPA notified the Governor of California, pursuant to section 110(a)(2)(H) of the 1977 Act, that the above districts' portions of the California SIP were inadequate to attain

and maintain the ozone standard and requested that deficiencies in the existing SIP be corrected (EPA's SIP-Call). On November 15, 1990, the Clean Air Act Amendments of 1990 were enacted. Pub. L. 101–549, 104 Stat. 2399, codified at 42 U.S.C. 7401–7671q. In amended section 182(a)(2)(A) of the CAA, Congress statutorily adopted the requirement that nonattainment areas fix their deficient reasonably available control technology (RACT) rules for ozone and established a deadline of May 15, 1991 for states to submit corrections of those deficiencies.

Section 182(a)(2)(A) applies to areas designated as nonattainment prior to enactment of the amendments and classified as marginal or above as of the date of enactment. It requires such areas to adopt and correct RACT rules pursuant to pre-amended section 172(b) as interpreted in pre-amendment guidance.[1] EPA's SIP-Call used that guidance to indicate the necessary corrections for specific nonattainment areas. Ventura County and the Sacramento Metro Area are classified as severe, the San Joaquin Valley Air Basin and all of Kern County is classified as serious, therefore, these areas were subject to the RACT fix-up requirement and the May 15, 1991 deadline. However, the Southeast Desert Air Basin portion of Kern County was not a pre-amendment nonattainment area and, therefore was not designated and classified upon enactment of the amended Act. For this reason, KCAPCD is not subject to section 182(a)(2)(A) RACT fix-up requirement. The KCAPCD is, however, still subject to the requirements of EPA's SIP-Call because the SIP-Call included all of Kern County.[2]

The State of California submitted many revised RACT rules for incorporation into its SIP on September 14, 1992, December 22, 1994, May 24, 1995, May 25, 1995, and March 26, 1996, including the rules being acted on in this document. This document addresses EPA's direct-final action for KNCAPCD's Rule 410.4, Surface Coating of Metal Parts and Products; PLCAPCD's Rule 244, Semiconductor Manufacturing Operations; VTCAPCD's Rules 74.7, Fugitive Emissions of Reactive Organic Compounds (ROC) at Petroleum Refineries and Chemical Plants, and 74.14, Polyester Resin Material Operations; and SJVUAPCD's Rule 4651, Volatile Organic Compound Emissions from Decontamination of Soil. KNCAPCD adopted Rule 410.4 on April 6, 1995, PLCAPCD adopted Rule 244 on February 9, 1995, VTCAPCD adopted Rules 74.7 on October 10, 1995, 74.14 on May 26, 1992, and SJVUAPCD adopted Rule 4651 on December 17, 1992. These submitted rules were found to be complete on November 20, 1992 (74.14), January 3, 1995 (4651), July 24, 1995 (410.4 and 244), and May 15, 1996, (74.7) pursuant to EPA's completeness criteria that are set forth in 40 CFR part 51, appendix V[3] and are being finalized for approval into the SIP.

These rules control VOC emissions from surface coating of metal parts and products, semiconductor manufacturing, polyester resin material operations, marine coatings, soil decontamination and fugitive ROC emissions at petroleum refineries and chemical plants. VOCs and ROCs contribute to the production of ground level ozone and smog. These rules were originally adopted as part of the efforts of these air pollution control districts to achieve the National Ambient Air Quality Standard (NAAQS) for ozone and in response to EPA's SIP-Call and the section 182(a)(2)(A) CAA requirement. The following is EPA's evaluation and final action for these rules.

EPA Evaluation and Action

In determining the approvability of a VOC rule, EPA must evaluate the rule for consistency with the requirements of the CAA and EPA regulations, as found in section 110 and part D of the CAA and 40 CFR part 51 (Requirements for Preparation, Adoption, and Submittal of Implementation Plans). The EPA interpretation of these requirements, which forms the basis for today's action, appears in the various EPA policy guidance documents listed in footnote 1. Among those provisions is the requirement that a VOC rule must, at a minimum, provide for the implementation of RACT for stationary sources of VOC emissions. This requirement was carried forth from the pre-amended Act.

For the purpose of assisting state and local agencies in developing RACT rules, EPA prepared a series of Control Technique Guideline (CTG) documents. The CTGs are based on the underlying requirements of the Act and specify the presumptive norms for what is RACT for specific source categories. Under the CAA, Congress ratified EPA's use of these documents, as well as other Agency policy, for requiring States to ''fix-up'' their RACT rules. See section 182(a)(2)(A). The CTG applicable to KNCAPCD's Rule 410.4 is entitled: ''Control of Volatile Organic Emissions from Existing Stationary Sources—Volume VI: Surface Coating of Miscellaneous Metal Parts and Products'', (EPA–450/2–015). The CTG applicable to VTCAPCD's Rule 74.7 is entitled: ''Control of Volatile Organic Compound Leaks from Synthetic Organic Chemical and Polymer Manufacturing Equipment'', (EPA–450/3–83–006). PLCAPCD's Rule 244, VTCAPCD's Rule 74.14, and SJVUAPCD's Rule 4651 control emissions from source categories for which EPA has not issued CTGs. Accordingly these rules were evaluated for consistency with the general RACT requirements of the Clean Air Act (CAA Section 110 and part D). Further interpretations of EPA policy are found in the Blue Book, referred to in footnote 1. In general, these guidance documents have been set forth to ensure that VOC rules are fully enforceable and strengthen or maintain the SIP.

KNCAPCD's submitted Rule 410.4, Surface Coating of Metal Parts and Products, is a revised rule which includes the following significant changes from the current SIP:

- Clarified definitions,
- Lower VOC limits for baked extreme performance and for both baked and air-dried pretreatment wash primer coatings,
- A capture efficiency requirement of at least 85% and a control efficiency requirement of 90%,
- New VOC limits and vapor pressure requirements for solvent usage,
- New prohibitions of sale and specifications
- Record keeping provisions that require daily records, as well as more specific information about the coating applied,
- New test methods.

PLCAPCD's Rule 244, Semiconductor Manufacturing Operations, is a new rule

[1] Among other things, the pre-amendment guidance consists of those portions of the proposed Post-1987 ozone and carbon monoxide policy that concern RACT, 52 FR 45044 (November 24, 1987); ''Issues Relating to VOC Regulation Cutpoints, Deficiencies, and Deviations, Clarification to Appendix D of November 24, 1987 Federal Register Notice'' (Blue Book) (notice of availability was published in the Federal Register on May 25, 1988); and the existing control technique guidelines (CTGs).

[2] Ventura County, the Sacramento Metro Area and the San Joaquin Valley Air Basin retained their designation of nonattainment and were classified by operation of law pursuant to sections 107(d) and 181(a) upon the date of enactment of the CAA. The Southeast Desert Airbasin portion of the KCAPCD was designated nonattainment on November 6, 1991. See 56 FR 56694 (November 6, 1991). However on April 25, 1995, EPA published a final rule granting the State's request to reclassify the Sacramento Metro Area to severe from serious (60 CFR 20237). This reclassification became effective on June 1, 1995.

[3] EPA adopted the completeness criteria on February 16, 1990 (55 FR 5830) and, pursuant to section 110(k)(1)(A) of the CAA, revised the criteria on August 26, 1991 (56 FR 42216).

which includes the following significant provisions:

• A requirement that all precursor VOCs from solvent cleaning stations be vented to control devices that reduce the total emissions by at least 90% by weight,

• In lieu of the above, a requirement that solvent cleaning stations be equipped with full covers, and a definition of freeboard ratio for solvent cleaning station sinks/reservoirs,

• A requirement that all precursor VOC emissions from negative photoresist operations be vented to control devices that reduce total emissions by at least 90% by weight,

• A list of test methods and record keeping requirements.

VTCAPCD's Rule 74.7, Fugitive Emissions of Reactive Organic Compounds (ROC) at Petroleum Refineries and Chemical Plants, is a revised rule which includes the following significant changes from the SIP:

• The applicability of the rule was expanded to include additional chemical plants,

• The definition section has been expanded,

• The operations requirement section was broadened,

• New inspection requirements were added,

• The repair requirements were revised,

• The Operator Management Plan was amended to reflect the new requirement and exemptions in the rule,

• The recordkeeping and reporting requirements were revised.

VTCAPCD's Rule 74.14, Polyester Resin Material Operations, is a new rule which includes the following significant provisions:

• Limits the ROC loss rate during resin polymerization to 60 grams per square meter of exposed area,

• Limits the monomer content of specialty and non-specialty, clear and pigmented gel coats, or requires the use of a closed mold system,

• Requires specified transfer efficient application methods,

• Limits ROC content of clean-up solvents,

• Add-on control equipment is specified when using non-compliant resin material,

• When compliant resin materials are used, records may be kept at weekly intervals, but daily records are required when using non-compliant resin material and/or an add-on control system,

• Test methods are included to verify rule compliance. SJVUAPCD's Rule 4651, Volatile Organic Compound Emissions from Decontamination of Soil, is a new rule which includes the following significant provisions:

• A definition of contaminated soil,

• An exemption for soil quantities of less than one cubic yard,

• A definition of the conditions allowing limited aeration,

• The requirements for decontamination systems,

• Test methods to be employed, and soil sampling procedures to be followed to verify compliance.

EPA has evaluated the submitted rules and has determined that they are consistent with the CAA, EPA regulations, and EPA policy. Therefore, KNCAPCD's Rule 410.4, Surface Coating of Metal Parts and Products; PLCAPCD's Rule 244, Semiconductor Manufacturing Operations; VTCAPCD's Rules 74.7, Fugitive Emissions of Reactive Organic Compounds (ROC) at Petroleum Refineries and Chemical Plants; 74.14, Polyester Resin Material Operations; and SJVUAPCD's Rule 4651, Volatile Organic Compound Emissions from Decontamination of Soils are being approved under section 110(k)(3) of the CAA as meeting the requirements of section 110(a) and part D.

Nothing in this action should be construed as permitting or allowing or establishing a precedent for any future implementation plan. Each request for revision to the state implementation plan shall be considered separately in light of specific technical, economic, and environmental factors and in relation to relevant statutory and regulatory requirements.

EPA is publishing this document without prior proposal because the Agency views this as a noncontroversial amendment and anticipates no adverse comments. However, in a separate document in this Federal Register publication, the EPA is proposing to approve the SIP revision should adverse or critical comments be filed. This action will be effective September 23, 1996, unless, by August 26, 1996, adverse or critical comments are received.

If the EPA receives such comments, this action will be withdrawn before the effective date by publishing a subsequent document that will withdraw the final action. All public comments received will then be addressed in a subsequent final rule based on this action serving as a proposed rule. The EPA will not institute a second comment period on this action. Any parties interested in commenting on this action should do so at this time. If no such comments are received, the public is advised that this action will be effective September 23, 1996.

Regulatory Process

Under the Regulatory Flexibility Act, 5 U.S.C. 600 *et seq.*, EPA must prepare a regulatory flexibility analysis assessing the impact of any proposed or final rule on small entities. 5 U.S.C. 603 and 604. Alternatively, EPA may certify that the rule will not have a significant impact on a substantial number of small entities. Small entities include small businesses, small not-for-profit enterprises and government entities with jurisdiction over population of less than 50,000.

SIP approvals under sections 110 and 301(a) and subchapter I, Part D of the CAA do not create any new requirements, but simply approve requirements that the State is already imposing. Therefore, because the Federal SIP-approval does not impose any new requirements, I certify that it does not have a significant impact on any small entities affected. Moreover, due to the nature of the Federal-state relationship under the CAA, preparation of a regulatory flexibility analysis would constitute Federal inquiry into the economic reasonableness of state action. The CAA forbids EPA to base its actions concerning SIPs on such grounds. *Union Electric Co.* v. *U.S. E.P.A.*, 427 U.S. 246, 256–66 (S. Ct. 1976); 42 U.S.C. 7410 (a)(2).

Unfunded Mandates

Under Sections 202, 203, and 205 of the Unfunded Mandates Reform Act of 1995 (''Unfunded Mandates Act''), signed into law on March 22, 1995, EPA must undertake various actions in association with proposed or final rules that include a Federal mandate that may result in estimated costs of $100 million or more to the private sector or to State, local, or tribal governments in the aggregate.

Through submission of this state implementation plan or plan revision, the State and any affected local or tribal governments have elected to adopt the program provided for under Part D of the Clean Air Act. These rules may bind State, local, and tribal governments to perform certain actions and also require the private sector to perform certain duties. The rules being approved by this action will impose no new requirements because affected sources are already subject to these regulations under State law. Therefore, no additional costs to State, local, or tribal governments or to the private sector result from this action. EPA has also determined that this final action does not include a mandate that may result in estimated costs of $100

million or more to State, local, or tribal governments in the aggregate or to the private sector.

Submission to Congress and the General Accounting Office

Under section 801(a)(1)(A) of the Administrative Procedure Act (APA) as amended by the Small Business Regulatory Enforcement Fairness Act of 1996, EPA submitted a report containing this rule and other required information to the U.S. Senate, the U.S. House of Representatives and the Comptroller General of the General Accounting Office prior to publication of this rule in today's Federal Register. This rule is not a ''major rule'' as defined by section 804(2) of the APA as amended.

This action has been classified as a Table 3 action for signature by the Regional Administrator under the procedures published in the Federal Register on January 19, 1989 (54 FR 2214–2225), as revised by a July 10, 1995 memorandum from Mary Nichols, Assistant Administrator for Air and Radiation. The Office of Management and Budget (OMB) has exempted this regulatory action from Executive Order 12866 review.

List of Subjects in 40 CFR Part 52

Environmental protection, Air pollution control, Hydrocarbons, Incorporation by reference, Intergovernmental relations, Ozone, Reporting and recordkeeping requirements, Volatile organic compounds.

Note: Incorporation by reference of the State Implementation Plan for the State of California was approved by the Director of the Federal Register on July 1, 1982.

Dated: June 17, 1996.

Felicia Marcus,

Regional Administrator.

Subpart F of part 52, chapter I, title 40 of the Code of Federal Regulations is amended as follows:

PART 52—[AMENDED]

1. The authority citation for part 52 continues to read as follows:

Subpart F—California

Authority: 42 U.S.C. 7401–7671q.

2. Section 52.220 is amended by adding paragraphs (c)(189)(i)(B)(*3*), (210)(i)(E), (220)(i)(B)(*3*), (221)(i)(A)(*2*), (229) and (230) to read as follows:

§ 52.220 Identification of plan.

* * * * *

(c) * * *

(189) * * *

(i) * * *

(B) * * *

(*3*) Rule 74.14, adopted on May 26, 1992.

* * * * *

(210) * * *

(i) * * *

(E) San Joaquin Valley Unified Air Pollution Control District.

(*1*) Rule 4651, adopted on December 17, 1992.

* * * * *

(220) * * *

(i) * * *

(B) * * *

(*3*) Rule 244, adopted on February 9, 1995.

* * * * *

(221) * * *

(i) * * *

(A) * * *

(*2*) Rule 410.4, adopted on April 6, 1995.

* * * * *

(229) (Reserved)

(230) New and amended regulations for the following APCDs were submitted on March 26, 1996, by the Governors designee.

(i) Incorporation by reference.

(A) Ventura County Air Pollution Control District.

(*1*) Rule 74.7, adopted on October 10, 1995.

* * * * *

[FR Doc. 96–18935 Filed 7–24–96; 8:45 am]

BILLING CODE 6560–50–W

---

40 CFR Part 52

[CT26–1–7198; A–1–FRL–5523–2]

Approval and Promulgation of Air Quality Implementation Plans; Approval of the Carbon Monoxide Implementation Plan Submitted by the State of Connecticut Pursuant to Sections 186–187 and 211(m)

AGENCY: Environmental Protection Agency (EPA).

ACTION: Final rule.

SUMMARY: On September 15, 1995, EPA proposed to approve the State implementation plans (SIP) submitted by the State of Connecticut for the purpose of bringing about the attainment of the national ambient air quality standard (NAAQS) for carbon monoxide (CO). The implementation plans were submitted by the State to satisfy the requirements of Sections 187(a)(2)(A), 187(a)(3), 187(a)(7) and 211(m) of the Clean Air Act for an approvable nonattainment area CO SIP for Connecticut's portion of the New York-New Jersey-Connecticut CO nonattainment area. Public comments were solicited on Connecticut's SIP submittals, which included the CO attainment demonstration, contingency measures, vehicle miles travelled (VMT) forecasts and the oxygenated fuels program for Connecticut's portion of the New York-New Jersey-Connecticut CO nonattainment area, and on EPA's proposed action. No public comments were received. In this action, EPA is finalizing the approvals of these SIP revisions. This document also updates 40 CFR 52.372, 52.373, and 52.374.

EFFECTIVE DATE: August 26, 1996.

ADDRESSES: Copies of the SIP revision relevant to this action are available for public inspection during normal business hours at the following location: U.S. Environmental Protection Agency, Region I, Air Quality Planning Unit, One Congress Street, 11th floor, Boston, MA 02203; and the Bureau of Air Management, Department of Environmental Protection, 79 Elm Street, Hartford, CT 06106.

FOR FURTHER INFORMATION CONTACT: Wing H. Chau, Air Quality Planning Unit (CAQ), Office of Ecosystem Protection, U.S. Environmental Protection Agency, Region 1, J.F.K. Federal Building, Boston, MA 02203, (617) 565–3570.

SUPPLEMENTARY INFORMATION: On January 12, 1993, January 14, 1993 April 7, 1994, and August 1, 1995, the Connecticut Department of Environmental Protection (DEP) submitted revisions to its State Implementation Plan (SIP) for air quality. The revisions are designed to satisfy the requirements of Sections 187(a)(2)(A), 187(a)(3), 187(a)(7) and 211(m) of the Clean Air Act, as amended in 1990 (CAA).

Those States containing CO nonattainment areas with design values greater than 12.7 parts per million (ppm) were required to submit, among other things, a State Implementation Plan revision, by November 15, 1992, that contains a forecast of VMT in the nonattainment area for each year before the year in which the SIP projects the NAAQS for CO to be attained and an attainment demonstration such that the plan will provide for attainment by December 31, 1995 for moderate CO nonattainment areas. The SIP revision is also required to provide for annual updates of the VMT forecasts along with annual reports regarding the extent to which the forecasts proved to be accurate. In addition, these annual reports must contain estimates of actual VMT in each year for which a forecast was required. The attainment demonstration must include a SIP control strategy, which is also due by

November 15, 1992. The SIP control strategy for a given nonattainment area must be designed to ensure that the area meets the specific annual emissions reductions necessary for reaching attainment by the deadline. In addition, section 187(a)(3) requires these areas to implement contingency measures if any estimate of actual VMT or any updated VMT forecast for the area contained in an annual report for any year prior to attainment exceeds the number predicted in the most recent VMT forecast. Contingency measures are also triggered by failure to attain the NAAQS for CO by the attainment deadline. Contingency measures must be submitted with the CO SIP by November 15, 1992. Section 211(m) of the Act requires states with CO nonattainment areas classified as moderate or above to submit SIP revisions to implement oxygenated gasoline programs by November 1, 1992. The oxygenated gasoline program must require gasoline sold or dispensed in the CMSA encompassing the CO nonattainment area to contain not less than 2.7 percent oxygen by weight during the portion of the year in which the area is prone to high ambient CO levels. This control period is to be determined by the Administrator, but shall not be less than four months.

On September 15, 1995, (60 FR 47907) EPA proposed approval of the SIP revisions designed to satisfy the requirements of Sections 187(a)(2)(A), 187(a)(3), 187(a)(7) and 211(m) of the Clean Air Act, as amended in 1990 (CAA). Among the elements EPA proposed to approve was Connecticut's oxygenated gasoline program as it applies to the Southwestern Control Area and that portion of the definition of control period that applies to the Southwestern Control Area. In a separate action approving redesignation of the Hartford CO nonattainment area, EPA approved Connecticut's oxygenated gasoline requirements as they apply to the Hartford area. EPA is here approving the State's oxygenated gasoline requirements as they apply to the Southwestern Control Area, including the control period for this area. In final action on the New York CO SIP published elsewhere in today's Federal Register, EPA is determining that the length of the period prone to high ambient concentrations of CO for the New York-New Jersey-Connecticut CMSA extends from November 1 through the last day of February. The scope of the Connecticut oxygenated gasoline program corresponds with this required control period, thereby satisfying that element of the section 211(m) requirements. Please refer to the September 15, 1995, Federal Register (60 FR 47907), the August 31, 1995, technical support document and the New York CO SIP approval for additional information on this final rule.

Public Comments

The public comment period for the September 15, 1995, (60 FR 47907), notice of proposed rulemaking to approve the SIP revisions submitted by the State of Connecticut for the purpose of bringing about the attainment of the National Ambient Air Quality Standard (NAAQS) for carbon monoxide closed on October 16, 1995, and no comments were received.

Final Rulemaking Action

The EPA is approving collectively the plan revisions submitted to EPA for the Connecticut portion of the NY–NJ–CT CO nonattainment area on January 12, 1993, January 14, 1993, April 7, 1994, and August 1, 1995. Among other things, Connecticut has demonstrated that the Connecticut portion of the NY–NJ–CT CO nonattainment area will continue to attain the CO NAAQS through December 31, 1995, the applicable attainment date.

This action has been classified as a Table 3 action for signature by the Regional Administrator under the procedures published in the Federal Register on January 19, 1989 (54 FR 2214–2225), as revised by a July 10, 1995 memorandum from Mary Nichols, Assistant Administrator for Air and Radiation. The Office of Management and Budget (OMB) has exempted this regulatory action from review under Executive Order 12866.

Under the Regulatory Flexibility Act, 5 U.S.C. 600 *et. seq.*, EPA must prepare a regulatory flexibility analysis assessing the impact of any proposed or final rule on small entities. 5 U.S.C. 603 and 604. Alternatively, EPA may certify that the rule will not have a significant impact on a substantial number of small entities. Small entities include small businesses, small not-for-profit enterprises, and government entities with jurisdiction over populations of less than 50,000.

A SIP approval does not create any new requirements, but simply approve requirements that the State is already imposing. Therefore, because the federal SIP-approval does not impose any new requirements, I certify that it does not have a significant impact on any small entities affected. Moreover, due to the nature of the federal-state relationship under the CAA, preparation of a regulatory flexibility analysis would constitute federal inquiry into the economic reasonableness of state action. The CAA forbids EPA to base its actions concerning SIPs on such grounds. *Union Electric Co.* v. *U.S. E.P.A.*, 427 U.S. 246, 256–66 (S.Ct. 1976); 42 U.S.C. 7410 (a)(2).

As noted, additional submittals for the CO nonattainment areas are required under Section 186 and 187 of the Act. The EPA will determine the adequacy of any such submittal as appropriate. Nothing in this action should be construed as permitting or allowing or establishing a precedent for any future request for revision to any State implementation plan. Each request for revision to the State implementation plan shall be considered separately in light of specific technical, economic, and environmental factors and in relation to relevant statutory and regulatory requirements.

The Administrator's decision to approve or disapprove the SIP revision will be based on whether it meets the requirements of Section 110(a)(2)(A)–(K) and 110(a)(3) of the Clean Air Act, as amended, and EPA regulations in 40 CFR Part 51.

Unfunded Mandates

Under Sections 202, 203, and 205 of the Unfunded Mandates Reform Act of 1995 (''Unfunded Mandates Act''), signed into law on March 25, 1995, EPA must undertake various actions in association with proposed or final rules that include a Federal mandate that may result in estimated costs of $100 million or more to the private sector, or to State, local, or tribal governments in the aggregate.

Through submission of this state implementation plan or plan revision, the State and any affected local or tribal governments have elected to adopt the program provided for under section 175A and section 187(a)(1) of the Clean Air Act. The rules and commitments approved in this action may bind State, local and tribal governments to perform certain actions and also may ultimately lead to the private sector being required to certain duties. To the extent that the imposition of any mandate upon the State, local or tribal governments either as the owner or operator of a source or as mandate upon the private sector, EPA's action will impose no new requirements under State law; such sources are already subject to these requirements under State law. Accordingly, no additional costs to State, local, or tribal governments, or to the private sector, results from this action. EPA has also determined that this final action does not include a mandate that may result in estimated costs of $100 million or more to State,

local, or tribal governments in the aggregate or to the private sector.

Submission to Congress and the General Accounting Office

Under section 801(a)(1)(A) of the Administrative Procedure Act (APA) as amended by the Small Business Regulatory Enforcement Fairness Act of 1996, EPA submitted a report containing this rule and other required information to the U.S. Senate, the U.S. House of Representatives and the Comptroller General of the General Accounting Office prior to publication of this rule in today's Federal Register. This rule is not a ''major rule'' as defined by section 804(2) of the APA as amended.

List of Subjects in 40 CFR Part 52

Incorporation by reference, Environmental protection, Air pollution control, Carbon monoxide, Intergovernmental relations, Reporting and recordkeeping requirements.

Dated: June 7, 1996.

John P. DeVillars,

Regional Administrator, EPA-Region 1.

Title 40 of the Code of Federal Regulations, chapter I, part 52 is amended as follows:

PART 52—[AMENDED]

1. The authority citation for part 52 continues to read as follows:

Authority: 42 U.S.C. 7401–7671q.

Subpart H–Connecticut

2. Section 52.370 is amended by adding paragraph (c)(71) to read as follows:

§ 52.370 Identification of plan.

* * * * *

(c) * * *

(71) Revisions to the Connecticut State Implementation Plan (SIP) for carbon monoxide concerning the control of carbon monoxide from mobile sources, dated January 12, 1993, January 14, 1993, April 7, 1994, and August 1, 1995 submitted by the Connecticut Department of Environmental Protection (CT DEP).

(i) Incorporation by reference.

(A) Letter dated August 1, 1995 which included the amendments and revisions to the Regulation of Connecticut State Agencies (RCSA), Section 22a-174–28(a) regarding the definition for the Southwestern Control Area and that portion of the definition of ''control period'' that applies to the Southwestern Control Area with an effective date of July 26, 1995.

(ii) Additional materials.

(A) January 12, 1993 and April 7, 1994, VMT forecasts beginning with the year 1993 and including all subsequent years up to the year of attainment (1995).

(B) January 12, 1993 and April 7, 1994, Carbon Monoxide Attainment Demonstration and Contingency Measures.

3. Section 52.372 is removed and reserved.

§ 52.372 [Removed and reserved]

4. Section 52.373 is revised to read as follows:

§ 52.373 Approval status.

(a) The Administrator approves the general procedures of the state's sulfur control regulations (19–508–19) and accompanying narrative submitted on October 23, 1981, and November 4, 1981 and identified under § 52.370(c)(18), provided that any individual source approvals granted by the state under the Air Pollution Control/Energy Trade Option and solid fuel burning permitting system are submitted to EPA as SIP revisions.

(b) The Administrator approves the total suspended particulate regulation for foundry sand processes as submitted and identified under paragraph (c)(22) of this section. This includes only the requirement to remove ninety percent of the particulate matter and not the requirement to emit not more than 0.75 pounds of particulate per ton of material cast, a provision which may be found in state regulation 19–508–18(f)(3).

5. Section 52.374 is amended by revising the table to read as follows:

§ 52.374 Attainment dates for national standards.

* * * * *

ATTAINMENT DATES ESTABLISHED BY CLEAN AIR ACT OF 1990

Air quality control region and nonattainment area	Pollutant					
	SO_2		PM–10	NO_2	CO	O_3
	Primary	Secondary				
AQCR 41: Eastern Connecticut Intrastate:						
Middlesex County (part) All portions except cities and towns in Hartford Area	(a)	(b)	(a)	(a)	(a)	(a)
New London County	(a)	(b)	(a)	(a)	(a)	(a)
Tolland County (part) All portions except cities and towns in Hartford Area	(a)	(b)	(a)	(a)	(a)	(e)
Windham County	(a)	(b)	(a)	(a)	(a)	(e)
AQCR 42: Hartford-New Haven-Springfield Interstate:						
Hartford-New Britian-Middletown Area						
Hartford County (part) See 40 CFR 81.307	(a)	(b)	(a)	(a)	(d)	(e)
Litchfield County (part) See 40 CFR 81.307	(a)	(b)	(a)	(a)	(d)	(e)
Middlesex County (part) See 40 CFR 81.307	(a)	(b)	(a)	(a)	(d)	(e)
Tolland County (part) See 40 CFR 81.307	(a)	(b)	(a)	(a)	(d)	(e)
New Haven-Meriden-Waterbury Area						
Fairfield County (part) See 40 CFR 81.307	(a)	(b)	(a)	(a)	(c)	(e)
Litchfield County (part) See 40 CFR 81.307	(a)	(b)	(a)	(a)	(c)	(e)
New Haven County						
All portions except City of New Haven	(a)	(b)	(a)	(a)	(c)	(e)
City of New Haven	(a)	(b)	(a)	(a)	(c)	(e)
AQCR 43: NY-NJ-CT Interstate:						
New York-N. New Jersey-Long Island Area						
Fairfield County (part) See 40 CFR 81.307	(a)	(b)	(a)	(a)	(c)	(e)
Litchfield County (part) See 40 CFR 81.307	(a)	(b)	(a)	(a)	(c)	(e)
AQCR 44: Northwestern Connecticut Intrastate						
Hartford County (part) Hartland Township	(a)	(b)	(a)	(a)	(a)	

ATTAINMENT DATES ESTABLISHED BY CLEAN AIR ACT OF 1990—Continued

Air quality control region and nonattainment area	Pollutant					
	SO_2		PM–10	NO_2	CO	O_3
	Primary	Secondary				
Litchfield County (part) All portions except cities and towns in Hartford, New Haven, and New York Areas	(a)	(b)	(a)	(a)	(a)	(e)

(a) Air quality levels presently below primary standards or area is unclassifiable.
(b) Air quality levels presently below secondary standards or area is unclassifiable.
(c) November 15, 1995.
(d) December 31, 1995.
(e) November 15, 1999.
(f) November 15, 2007.
(g) December 31, 1995 (one-year extension granted).

6. Section 52.376 is amended by adding paragraph (c) to read as follows:

§ 52.376 Control strategy: Carbon monoxide.

* * * * *

(c) Approval-On January 12, 1993 and April 7, 1994, the Connecticut Department of Environmental Protection submitted revisions to the carbon monoxide State Implementation Plan for VMT forecasts, contingency measures, and attainment demonstration for CO. These VMT forecasts, contingency measures, and attainment demonstration were submitted by Connecticut to satisfy Federal requirements under sections 187(a)(2)(A), 187(a)(3) and 187(a)(7) of the Clean Air Act, as amended in 1990, as revisions to the carbon monoxide State Implementation Plan.

[FR Doc. 96–18644 Filed 7–24–96; 8:45 am]

BILLING CODE 6560–50–P

40 CFR Part 52

[IL114–1–6788a; FRL–5540–5]

Approval and Promulgation of Implementation Plans; Illinois

AGENCY: Environmental Protection Agency.

ACTION: Direct final rule.

SUMMARY: On May 5, 1995, and May 31, 1995, the State of Illinois submitted a State Implementation Plan (SIP) revision request to the Environmental Protection Agency (EPA) establishing regulations for motor vehicle refinishing operations in the Chicago and Metro-East ozone nonattainment areas, as part of the State's 15 percent (%) Rate of Progress (ROP) plan control measures for Volatile Organic Matter (VOM) emissions. VOM, as defined by the State of Illinois, is identical to ''volatile organic compounds'' (VOC), as defined by EPA. VOM combines with oxides of nitrogen in the atmosphere to form ground-level ozone, commonly known as smog. Exposure to ozone is associated with a wide variety of human health effects, agricultural crop loss, and damage to forests and ecosystems. ROP plans are intended to bring areas which have been exceeding the public health based Federal ozone air quality standard closer to attaining this standard. This SIP revision contains rules which establish VOM content limits for certain coatings and surface preparation products used in automobile and mobile equipment refinishing operations in the Chicago and Metro-East areas, as well as requires these operations to meet certain equipment and work practice standards to further reduce VOM. Illinois expects that the control measures specified in this SIP revision will reduce VOM emissions by 16.30 tons per day (TPD) in the Chicago area and 1.2 TPD in the Metro-East area. This rulemaking action approves, through direct final, the Illinois motor vehicle refinishing rule SIP revision request.

DATES: The ''direct final'' is effective on September 23, 1996, unless EPA receives adverse or critical comments by August 26, 1996. If the effective date is delayed, timely notice will be published in the Federal Register.

ADDRESSES: Copies of the SIP revision request is available for inspection at the following address: U.S. Environmental Protection Agency, Region 5, Air and Radiation Division, 77 West Jackson Boulevard, Chicago, Illinois 60604. (It is recommended that you telephone Mark J. Palermo at (312) 886–6082 before visiting the Region 5 Office.)

Written comments should be sent to: J. Elmer Bortzer, Chief, Regulation Development Section, Air Programs Branch (AR–18J), U.S. Environmental Protection Agency, 77 West Jackson Boulevard, Chicago, Illinois 60604.

FOR FURTHER INFORMATION CONTACT: Mark J. Palermo at (312) 886–6082.

SUPPLEMENTARY INFORMATION:

I. Background

Section 182(b)(1) of the Clean Air Act (the Act) requires all moderate and above ozone nonattainment areas to achieve a 15% reduction of 1990 emissions of VOC (VOM) by 1996. In Illinois, the Chicago area (Cook, DuPage, Kane, Lake, McHenry, Will Counties and Aux Sable and Goose Lake Townships in Grundy County and Oswego Township in Kendall County) is classified as ''severe'' nonattainment for ozone, while the Metro-East area (Madison, Monroe, and St. Clair Counties) is classified as ''moderate'' nonattainment. As such, these areas are subject to the 15% ROP requirement.

The Act specifies under section 182(b)(1)(C) that the 15% emission reduction claimed under the ROP plan must be achieved through the implementation of control measures through revisions to the SIP, the promulgation of federal rules, or through permits under Title V of the Act, by November 15, 1996. Control measures implemented before November 15, 1990, are precluded from counting toward the 15% reduction.

Illinois has adopted and submitted motor vehicle refinishing rules for the control of VOM as a revision to the SIP for the purpose of meeting the 15% ROP plan control measure requirement for the Chicago and Metro-East ozone nonattainment areas. A public hearing on the rule was held on December 16, 1994, in Chicago, Illinois. The rule was adopted by the Illinois Pollution Control Board on April 20, 1995. The rule became effective on May 9, 1995; it was published in the Illinois State Register on May 19, 1995. The Illinois Environmental Protection Agency (IEPA) formally submitted the motor vehicle refinishing rule to EPA on May 5, 1995, as a revision to the Illinois SIP for ozone; supplemental documentation to this revision was submitted on May

31, 1995. EPA made a finding of completeness in a letter dated July 13, 1995.

The May 5, 1995, and May 31, 1995 submittals include the following new or revised rules:

Part 211: Definitions and General Provisions

Subpart B: Definitions

211.240 Adhesion Promoter
211.495 Anti-Glare/Safety Coating
211.685 Basecoat/Clearcoat System
211.1875 Elastomeric Materials
211.3915 Mobile Equipment
211.3960 Motor Vehicles
211.3965 Motor Vehicle Refinishing
211.5010 Precoat
211.5061 Pretreatment Wash Primer
211.5080 Primer Sealer
211.5090 Primer Surfacer Coat
211.6145 Specialty Coatings for Motor Vehicles
211.6540 Surface Preparation Materials
211.6620 Three or Four Stage Coating System
211.6695 Topcoat System
211.6720 Touch-Up Coating
211.6860 Uniform Finish Blender

Part 218: Organic Material Emission Standards and Limitations for the Chicago Area

Subpart HH: Motor Vehicle Refinishing

218.780 Emission Limitations
218.782 Alternative Control Requirements
218.784 Equipment Specifications
218.786 Surface Preparation Materials
218.787 Work Practices
218.788 Testing
218.789 Monitoring and Recordkeeping for Control Devices
218.790 General Recordkeeping and Reporting
218.791 Compliance Date
218.792 Registration

Part 219: Organic Material Emission Standards and Limitations for the Metro-East St. Louis Area

Subpart HH: Motor Vehicle Refinishing

219.780 Emission Limitations
219.782 Alternative Control Requirements
219.784 Equipment Specifications
219.786 Surface Preparation Materials
219.787 Work Practices
219.788 Testing
219.789 Monitoring and Record keeping for Control Devices
219.790 General Record keeping and Reporting
219.791 Compliance Date
219.792 Registration

The motor vehicle refinishing regulations contained in part 218 are identical to those in part 219 except for the areas of applicability. Part 218 applies to the Chicago area, while part 219 applies to the Metro-East area. EPA's evaluation of these rules are as follows.

II. Evaluation of Rules

As previously discussed, this SIP submittal is required by the Act to the extent that the rule submitted is part of the Illinois 15% ROP plan.

A review of what emission reduction this SIP achieves for purposes of the Illinois 15% ROP plans will be addressed when rulemaking on the Chicago 15% ROP SIP, and the Metro-East 15% ROP SIP is taken. (EPA will take rulemaking on the overall 15% ROP in subsequent rulemaking action(s).) It should also be noted that Illinois' motor vehicle refinishing rules are not required to be reviewed for purposes of Reasonably Available Control Technology (RACT) requirements under the Act because no motor vehicle refinishing facility in Illinois has the potential to emit at least 25 tons of VOC, which would qualify a major source for RACT purposes.

In order to determine the approvability of the Illinois motor refinishing SIP, the rule was reviewed for its consistency with section 110 and part D of the Act, and its enforceability. Used in this analysis were EPA policy guidance documents, including the draft Control Techniques Guidelines (CTG) for motor vehicle refinishing; the Alternative Control Techniques (ACT) document for motor vehicle refinishing; and the June 1992, model VOC rules as they pertain to add-on control systems. A discussion of the rule and EPA's rule analysis is as follows.

Definitions

The new definitions added to part 211, which are based upon similar definitions in the ACT and draft CTG, accurately describe the subject industry, the subject and exempt coating categories, and the applicable control methods and equipment specified in the rule. These definitions are, therefore, approvable.

Sections 218/219.780 Emission Limitations

The emission limitations specified in these sections apply to all owners or operators of a motor vehicle refinishing operation located in the Chicago and Metro-East ozone nonattainment areas. ''Motor vehicle refinishing'' is defined in this rule as any application of coating to motor vehicle, mobile equipment, or their parts and components, which is subsequent to the original coating applied at an original equipment manufacturing plant (211.3965). In turn, ''motor vehicles'' means automobiles, trucks, vans, motorcycles, or buses (211.3960). Finally, ''mobile equipment'' is any equipment which may be drawn or is capable of being driven on a roadway, other than motor vehicles, including, but not limited to, truck or automobile trailers, farm machinery, construction equipment, street cleaners, and golf carts (211.3915).

Sections 218/219.780 establish VOM content limitations for specified categories of coatings applied at each coating applicator used in motor vehicle refinishing operations. Touch-up coatings, however, are exempt from VOM content limitations (218/219.780(a)) ''Touch-up coatings'' are defined in the rule as coatings applied by brush or hand held, non-refillable aerosol cans to repair minor surface damage and imperfections (211.6720).

Likewise, sections 218/219.786 provide VOM content limits for surface preparation products, which are used to remove foreign matter, such as wax, tar, grease, and silicone from the surface to be coated.

The specific VOM content limitation for each coating and surface preparation material category is as follows, expressed as units of VOM per volume of coating or product applied at each coating or product applicator, minus water and any compounds that are specifically exempted from the definition of VOM:

	kg/l	lb/gal
(1) Pretreatment wash primer	0.78	6.5
(2) Precoat	0.66	5.5
(3) Primer/primer surfacer coating	0.58	4.8
(4) Primer sealer	0.55	4.6
(5) Topcoat system or basecoat/clearcoat	0.60	5.0
(6) Three or four stage topcoat system	0.63	5.2
(7) Specialty coatings	0.84	7.0
(8) Anti-glare/safety coating	0.84	7.0
(9) Plastic parts preparation product	0.78	6.5
(10) Preparation Products for other substrates	0.17	1.4

These emission limitations are generally based on ''option 1'' coating limits in the draft CTG. The Illinois rule requires that all coatings must be used according to manufacturer's specifications and if the coating is mixed with additives prior to application, this mixing cannot create a violation of the VOM content limitations (218/219.780(b)).

Further, specialty coatings must represent no more than 5 percent, by volume, of all coatings applied by a source on a monthly basis (218/219.780(c)). This requirement is based upon a draft CTG recommendation to

assure that specialty coatings are not used as substitutes for coatings which are subject to more stringent emission limits. Specialty coatings for motor vehicles are defined as coatings used for unusual job performance requirements, including, but not limited to, adhesion promoters, uniform finish blenders, elastomeric materials, gloss flatteners, and bright metal trim repair (211.6145).

The rule also contains equations based on those contained in the draft CTG to determine the weighted average VOM content of topcoat systems, which include clearcoat/basecoat and three or four stage topcoat systems (218/219.780(d)). This average must be at or below the limit to be in compliance.

Sections 218/219.782 Alternative Control Requirements

As an alternative to complying with the coating requirements of this rule, sections 218/219.782 allow a subject motor vehicle refinishing operation to operate control equipment that reduces VOM at the source by at least 90 percent. Subsection (b) states that a facility may operate either an afterburner or carbon adsorber, or use an equivalent alternative control plan if approved by the IEPA and EPA through federally enforceable permit conditions.

On December 17, 1992 (57 FR at 59928), EPA approved Illinois' existing Operating Permit program as satisfying EPA's June 28, 1989 (57 FR at 27274), five criteria regarding Federal enforceability. One of the criteria is that permits may not be issued that make less stringent any SIP limitation or requirement. EPA's December 17, 1992, rulemaking states that operating permits issued by Illinois in conformance with the five criteria (including the prohibition against States issuing operating permit limits less stringent than the regulations in the SIP) discussed in the June 28, 1989, rulemaking will be considered federally enforceable. The December 17, 1992, rulemaking also states Illinois' operating permit program allows EPA to deem an operating permit not ''federally enforceable.''

On July 21, 1992, EPA promulgated a new part 70 of chapter 1 of title 40 of the Code of Federal Regulations (CFR) (*See* 57 FR 32250). This new part 70 contains regulations, required by Title V of the Act, that require and specify the minimum elements of State operating permit programs. Part 70 is therefore an appropriate basis for evaluating the acceptability of Illinois' use of federally enforceable State operating permits (FESOP) and Title V permits in its VOM rules.

If an applicable implementation plan allows a determination of an alternative emission limit at a part 70 source, equivalent to that contained in the plan, to be made in the permit issuance, renewal, or significant modification process, and the State elects to use such process, any permit containing such equivalency determination shall contain provisions to ensure that any resulting emissions limit has been demonstrated to be quantifiable, accountable, enforceable, and based on replicable procedures.

EPA has therefore determined that section 218/219.782(b), is approvable because it requires that any alternative must be equivalent to the underlying SIP requirements (consistent with part 70) and EPA can deem a permit containing an alternative control plan to be not ''federally enforceable'' if it determines that a permit is not quantifiable or practically enforceable or a permit relaxes the SIP. The underlying SIP, to which any equivalent alternative control plan must be compared, has federally enforceable control requirements, test methods, and record keeping and reporting requirements. The procedures for EPA's approval of these alternative control plans are specified in a September 13, 1995, letter from the IEPA to Region 5 of the EPA.

Sections 218/219.784 Equipment Specifications

Besides meeting VOM content limits for coatings and surface preparation materials, motor vehicle refinishing operations in the Chicago and Metro East nonattainment areas using 20 or more gallons of coating per calendar year are required by sections 218/219.784 to coat motor vehicles, mobile equipment, or their parts and components using either electrostatic or high volume low pressure (HVLP) spray equipment. Electrostatic spray is already defined in part 211 as a spray coating method in which opposite electrical charges are applied to the substrate and the coating; the coating is attracted to the object due to the electrostatic potential between them (211.1890). Likewise, HVLP spray is defined as equipment used to apply coatings by means of a spray gun which operates between 0.1 and 10 pounds per square inch gauge (psig) air pressure (211.2990). These two definitions have already been approved in a prior rulemaking action on September 9, 1994 (See 59 FR at 46562). The spray guns are required by the Illinois rule to be calibrated, operated, and maintained in accordance with the manufacturer's specifications. Use of this equipment increases the transfer efficiency of the coating from the applicator to the surface, thereby reducing overspray and resultant VOM emissions.

Facilities which apply 20 or more gallons of coating per year are also required under sections 218/219.784 to clean all coating applicators with a device that recirculates solvent during the cleaning process, collects spent solvent so it is available for disposal or recycling, and minimizes evaporation of solvents during cleaning, rinsing, draining, and storage.

Sections 218/219.786 Surface Preparation Materials

These sections are discussed in conjunction with sections 218/219.780 above.

Sections 218/219.787 Work Practices

Sections 218/219.787 require that every motor vehicle refinishing operation in the Chicago and Metro-East ozone nonattainment areas ensures that fresh and spent solvent, cloth or paper used to apply solvent for surface preparation or cleanup, waste paint, and sludge are stored in closed containers. This is intended to reduce evaporation of solvent and resultant VOM emissions. Further, facilities which are exempt from equipment specifications because they use less than 20 gallons of coating per year must direct solvent used to clean coating applicator equipment and paint lines into a container for proper disposal or recycling.

Sections 218/219.788 Testing

Under sections 218/219.787, motor vehicle refinishing facilities are required, upon the request of IEPA, to conduct tests in order to demonstrate compliance with VOM limits or control device requirements. These tests are to be done in accordance with the applicable test methods and procedures specified in sections 218/219.105, which were approved and incorporated into the Illinois SIP on September 9, 1994 (*See* 59 FR at 46562).

The facility shall notify IEPA 30 days prior to conducting such tests, as well as submit all test results to IEPA within 45 days after completion of the tests. In addition, sections 218/219.788 state that nothing in these sections shall limit the authority to require testing or inspect facilities under section 114 of the Act.

Sections Section 218/219.789 Monitoring and Record keeping for Control Devices

Sources using add-on control devices to comply with this rule are required under sections 218/219.789 to install and operate equipment to continuously monitor each control device as specified

in sections 218/219.105(d)(2)(A), which was approved and incorporated into the SIP on September 9, 1994 (*See* 59 FR at 46562). Facilities must also keep and maintain for three consecutive years records of parameters for control devices as monitored, as well as logs of operating time and maintenance of the control device and monitoring equipment, and make all such records available to IEPA immediately upon request. These requirements are generally consistent with those provided in the June 1992 VOC model rules for add-on control devices.

An alternative monitoring method, or monitoring of other parameters than required, can be used if approved by the IEPA and EPA through federally enforceable permit conditions. As discussed previously for alternative control plans under section 218/219.782, EPA approved, on December 17, 1992 (57 FR at 59928), Illinois' existing Operating Permit program as satisfying EPA's June 28, 1989 (57 FR at 27274), five criteria regarding Federal enforceability. Moreover, these federally enforceable permit conditions are subject to the approvability criteria outlined in the July 21, 1992, rulemaking establishing 40 CFR part 70 (57 FR 32250). The procedures for EPA's review and approval for these alternative monitoring methods and parameters are specified in a September 13, 1995, letter from IEPA to Region 5 of EPA. These sections are, therefore, approvable.

Section 218.219 General Record keeping and Reporting

All motor vehicle refinishing operations in the Chicago and Metro-East ozone nonattainment areas shall keep the following records on a monthly basis for three consecutive years, and the records shall be available to IEPA immediately upon request, as required by sections 218/219.790:

(a) the name and manufacturer of each coating and surface preparation product used at the facility each month;

(b) the volume of each category of coating purchased (specified according to emission limit categories) by the facility each month;

(c) the coating mixing instructions, as specified and supplied by the manufacturer, for each coating purchased each month;

(d) the VOM content, expressed as weight of VOM per volume of coating, minus water and any compounds that are specifically exempted from the definition of VOM, recorded on a monthly basis for:

(1) each coating as purchased, if not to be mixed with additives prior to application on the substrate; or,

(2) each coating after mixing according to the manufacturer's instructions;

(e) the weighted average VOM content of each basecoat/clearcoat, and three or four stage coating system purchased by the source, recorded on a monthly basis;

(f) the total monthly volume of all specialty coatings purchased and the percentage specialty coatings comprised in the aggregate of all coatings purchased by the source each month;

(g) the volume of each category of surface preparation material, as specified by the emission limit categories, purchased by the source each month;

(h) the VOM content, expressed as weight of VOM per volume of material, including water, of each surface preparation material purchased by the source, recorded on a monthly basis.

Although the draft CTG for motor vehicle refinishing recommends that rules require daily record keeping of coatings and additives to determine compliance, Illinois indicates that the State rule's requirements are adequate for the following reasons. On April 30, 1996, EPA proposed a National rule requiring motor vehicle refinishing manufacturers to meet coating emission limits that are as stringent as, or tighter than, the coating limits required under the Illinois rule (*See* 61 FR 19005). This rule is required to be made final by March, 1997, as established under the schedule for promulgating consumer and commercial products, which was published on March 23, 1995 (*See* 56 FR at 15264). The Federal rule for motor vehicle refinishing coating manufacturers, once final, will assure that coating purchases made by refinishing operations covered under the Illinois rule, will, when prepared for application according to the manufacturer's mixing instructions, meet the applicable VOM content limit. Illinois further indicates that based on extensive outreach with the affected motor vehicle refinishing industry, the State is assured that manufacturer's mixing instructions are strictly followed because the industry is dependent on using these instructions in conjunction with computerized mixing equipment, in order to obtain customer satisfaction with the color match of the finished job, and to properly adhere to the conditions of the coating manufacturer's warranty.

Finally, although certain record keeping requirements are required for touch-up coatings exemptions under rules for other coating source categories to ensure the exempted coatings are being used as substitutes for covered coatings, such record keeping does not need to be kept for motor vehicle refinishing touch-up coatings exempted under section 218/219.780, because these coatings are typically dispensed from small containers and are not capable of being used as substitutes for the subject coatings.

Based on the reasons outlined above, EPA finds that the Illinois rule's record keeping is acceptable for determining compliance.

Section 218/219.791 Compliance Date

Sections 218/219.791 require that every motor vehicle refinishing operation in the Chicago and Metro-East ozone nonattainment areas comply with applicable requirements of this rule by March 15, 1996, upon modification, or upon initial start-up.

Section 218/219 Registration

In accordance with sections 218/219.792, each motor vehicle refinishing operation shall report to the IEPA before or on its compliance date and annually thereafter the following information: a description of all coating operations of all refinishing and associated surface preparation operations at the source, along with a description of all coating applicators, cleanup operations, and work practices at the source; certification that the source uses less than 20 gallons of coating per year (if applicable); a written declaration stating whether the source is in compliance with coating VOM content limits or compliance with control device requirements; and a description of any control device used and when the device became operational. These reporting requirements are acceptable.

IV. Final Rulemaking Action

The EPA approves, through direct final, the Illinois SIP revision request governing the control of VOM from motor vehicle refinishing facilities in the Chicago and Metro-East ozone nonattainment areas.

V. Procedural Background

A. Direct Final Action

The EPA is publishing this action without prior proposal because EPA views this action as a noncontroversial revision and anticipates no adverse comments. However, EPA is publishing a separate document in this Federal Register publication, which constitutes a ''proposed approval'' of the requested SIP revision and clarifies that the rulemaking will not be deemed final if timely adverse or critical comments are filed. The ''direct final'' approval shall be effective on September 23, 1996,

unless EPA receives adverse or critical comments by August 26, 1996. If EPA receives comments adverse to or critical of the approval discussed above, EPA will withdraw this approval before its effective date by publishing a subsequent Federal Register document which withdraws this final action. All public comments received will then be addressed in a subsequent rulemaking document. Any parties interested in commenting on this action should do so at this time. If no such comments are received, EPA hereby advises the public that this action will be effective on September 23, 1996.

B. Executive Order 12866

This action has been classified as a Table 3 action for signature by the Regional Administrator under the procedures published in the Federal Register on January 19, 1989 (54 FR 2214–2225), as revised by a July 10, 1995, memorandum from Mary D. Nichols, Assistant Administrator for Air and Radiation. The Office of Management and Budget (OMB) has exempted this regulatory action from Executive Order 12866 review.

C. Applicability to Future SIP Decisions

Nothing in this action should be construed as permitting, allowing or establishing a precedent for any future request for revision to any SIP. EPA shall consider each request for revision to the SIP in light of specific technical, economic, and environmental factors and in relation to relevant statutory and regulatory requirements.

D. Unfunded Mandates

Section 202 of the Unfunded Mandates Reform Act of 1995 (''Unfunded Mandates Act'') (signed into law on March 22, 1995) requires that the EPA prepare a budgetary impact statement before promulgating a rule that includes a Federal mandate that may result in expenditure by State, local, and tribal governments, in aggregate, or by the private sector, of $100 million or more in any one year. Section 203 requires the EPA to establish a plan for obtaining input from and informing, educating, and advising any small governments that may be significantly or uniquely affected by the rule.

Under section 205 of the Unfunded Mandates Act, the EPA must identify and consider a reasonable number of regulatory alternatives before promulgating a rule for which a budgetary impact statement must be prepared. The EPA must select from those alternatives the least costly, most cost-effective, or least burdensome alternative that achieves the objectives of the rule, unless the EPA explains why this alternative is not selected or the selection of this alternative is inconsistent with law.

This final rule only approves the incorporation of existing state rules into the SIP and imposes no additional requirements. This rule is estimated to result in the expenditure by State, local, and tribal governments or the private sector of less than $100 million in any one year. EPA, therefore, has not prepared a budgetary impact statement or specifically addressed the selection of the least costly, most cost-effective, or least burdensome alternative. Furthermore, because small governments will not be significantly or uniquely affected by this rule, the EPA is not required to develop a plan with regard to small governments.

E. Regulatory Flexibility Analysis

Under the Regulatory Flexibility Act, 5 U.S.C. 600 et seq., EPA must prepare a regulatory flexibility analysis assessing the impact of any proposed or final rule on small entities. (5 U.S.C. 603 and 604.) Alternatively, EPA may certify that the rule will not have a significant impact on a substantial number of small entities. Small entities include small businesses, small not-for-profit enterprises, and government entities with jurisdiction over populations of less than 50,000.

SIP approvals under section 110 and subchapter I, part D of the Clean Air Act do not create any new requirements, but simply approve requirements a State has already imposed. Therefore, because the Federal SIP-approval does not impose any new requirements, I certify that it does not have a significant impact on any small entities affected. Moreover, due to the nature of the Federal-State relationship under the Act, preparation of a regulatory flexibility analysis would constitute Federal inquiry into the economic reasonableness of the State action. The Clean Air Act forbids EPA to base its actions concerning SIPs on such grounds. *Union Electric Co.* v. *EPA.*, 427 U.S. 246, 256–66 (S.Ct. 1976); 42 U.S.C. section 7410(a)(2).

F. Submission to Congress and the General Accounting Office

Under section 801(a)(1)(A) of the Administrative Procedure Act (APA) as amended by the Small Business Regulatory Enforcement Fairness Act of 1996, EPA submitted a report containing this rule and other required information to the U.S. Senate, the U.S. House of Representatives and the Comptroller General of the General Accounting Office prior to publication of the rule in today's Federal Register. This rule is not a ''major rule'' as defined by section 804(2) of the APA as amended.

G. Petitions for Judicial Review

Under section 307(b)(1) of the Clean Air Act, petitions for judicial review of this action must be filed in the United States Court of Appeals for the appropriate circuit by September 23, 1996. Filing a petition for reconsideration by the Administrator of this final rule does not affect the finality of this rule for the purposes of judicial review nor does it extend the time within which a petition for judicial review may be filed, and shall not postpone the effectiveness of such rule or action. This action may not be challenged later in proceedings to enforce its requirements. (See Section 307(b)(2)).

List of Subjects in 40 CFR Part 52

Environmental protection, Air pollution control, Incorporation by reference, Ozone, Volatile organic compounds.

Dated: July 3, 1996.

Valdas V. Adamkus,

Regional Administrator.

For the reasons stated in the preamble, part 52, chapter I, title 40 of the Code of Federal Regulations is amended as follows:

PART 52—[AMENDED]

1. The authority citation for part 52 continues to read as follows:

Authority: 42 U.S.C. 7401–7671q.

Subpart O—Illinois

2. Section 52.720 is amended by adding paragraph (c)(120) to read as follows:

§ 52.720 Identification of plan.

* * * * *

(c) * * *

(120) On May 5, 1995, and May 31, 1995, the State of Illinois submitted a rule for motor vehicle refinishing operations, which consisted of new volatile organic material (VOM) emission limitations to the Ozone Control Plan for the Chicago and Metro East St. Louis areas. This State Implementation Plan revision contains rules which establish VOM content limits for certain coatings and surface preparation products used in automobile and mobile equipment refinishing operations in the Chicago and Metro-East area, as well as requires these operations to meet certain equipment and work practice standards to further reduce VOM.

(i) Incorporation by reference. Illinois Administrative Code, Title 35: Environmental Protection, Subtitle B: Air Pollution, Chapter I: Pollution Control Board, Subchapter c: Emissions Standards and Limitations for Stationary Sources.

(A) Part 211: Definitions and General Provisions, Subpart B; Definitions, Sections 211.240 Adhesion Promoter, 211.495 Anti-Glare/Safety Coating, 211.685 Basecoat/Clearcoat System, 211.1875 Elastomeric Materials, 211.3915 Mobile Equipment, 211.3960 Motor Vehicles, 211.3965 Motor Vehicle Refinishing, 211.5010 Precoat, 211.5061 Pretreatment Wash Primer, 211.5080 Primer Sealer, 211.5090 Primer Surfacer Coat, 211.6145 Specialty Coatings for Motor Vehicles, 211.6540 Surface Preparation Materials, 211.6620 Three or Four Stage Coating System, 211.6695 Topcoat System, 211.6720 Touch-Up Coating, 211.6860 Uniform Finish Blender, amended at 19 Ill. 6823, effective May 9, 1995.

(B) Part 218: Organic Material Emission Standards and Limitations for the Chicago Area, Subpart HH; Motor Vehicle Refinishing, Sections 218.780 Emission Limitations, 218.782 Alternative Control Requirements, 218.784 Equipment Specifications, 218.786 Surface Preparation Materials, 218.787 Work Practices, 218.788 Testing, 218.789 Monitoring and Record keeping for Control Devices, 218.790 General Record keeping and Reporting, 218.791 Compliance Date, 218.792 Registration, amended at 19 Ill. 6848, effective May 9, 1995.

(C) Part 219: Organic Material Emissions Standards and Limitations for the Metro-East Area, Subpart HH; Motor Vehicle Refinishing, Sections 219.780 Emission Limitations, 219.782 Alternative Control Requirements, 219.784 Equipment Specifications, 219.786 Surface Preparation Materials, 219.787 Work Practices, 219.788 Testing, 219.789 Monitoring and Record keeping for Control Devices, 219.790 General Record keeping and Reporting, 219.791 Compliance Date 219.792 Registration, amended at 19 Ill. Reg. 6958, effective May 9, 1995.

* * * * *

[FR Doc. 96–18649 Filed 7–24–96; 8:45 am]

BILLING CODE 6560–50–P

40 CFR Part 52

[IL102–2; FRL–5532–3]

Approval and Promulgation of Air Quality Implementation Plans; Illinois: Motor Vehicle Inspection and Maintenance

AGENCY: Environmental Protection Agency (EPA).

ACTION: Final rule.

SUMMARY: EPA is approving portions and conditionally approving other portions of a vehicle inspection and maintenance (I/M) State Implementation Plan (SIP) revision submitted by the State of Illinois on June 29, 1995, based on the State's April 22, 1996, letter of commitment to submit certain items within one year of the final conditional approval. This revision provides for the adoption and implementation of an enhanced I/M program in both the Chicago severe ozone nonattainment area and the East St. Louis moderate ozone nonattainment area. Both areas are required to attain the National Ambient Air Quality Standards (NAAQS) as specified under the Clean Air Act (Act) by 2007 and 1996 respectively. Illinois indicates that the implementation of this important program in the two areas stated above, will reduce vehicle emissions which contribute to the formation of urban smog in Illinois by more than 38 tons per day. In support of the conditional approval of the SIP revision, the State has submitted the State's Request-For-Proposals as supplemental information to the SIP. In addition, the State has committed in an April 22, 1996, letter to submit to EPA as supplemental information in support of the SIP, the State's final I/M contract and any rules necessary to address the requirements identified in the analysis section of this document.

EFFECTIVE DATE: This final rule is effective July 25, 1996.

ADDRESSES: Materials relevant to this rulemaking are available for inspection at the following address: (It is recommended that you telephone Francisco J. Acevedo at (312) 886–6061, before visiting the Region 5 office.) U.S. Environmental Protection Agency, Region 5, Air and Radiation Division, Air Programs Branch, 77 West Jackson Boulevard (AR–18J), Chicago, Illinois 60604.

FOR FURTHER INFORMATION CONTACT: Francisco J. Acevedo, Environmental Engineer, Regulation Development Section, Air Programs Branch (AR–18J), United States Environmental Protection Agency, Region 5, 77 West Jackson Boulevard, Chicago, Illinois 60604, (312) 886–6061.

SUPPLEMENTARY INFORMATION:

I. Introduction

Motor vehicles are significant contributors of volatile organic compounds (VOC), carbon monoxide (CO), and nitrogen oxide (NO_X) emissions. The motor vehicle inspection and maintenance program is an effective means of reducing these emissions. Despite improvements in emission control technology in past years, mobile sources in urban areas continue to remain responsible for roughly half of the emissions of VOC causing ozone, and most of the emissions of CO. They also emit substantial amounts of nitrogen oxides and air toxics. This is because the number of vehicle miles traveled has doubled in the last 20 years to 2 trillion miles per year, offsetting much of the technological progress in vehicle emission control over the same period. Projections indicate that the steady growth in vehicle miles will continue.

Under the Act, the EPA is pursuing a three-point strategy to achieve emission reductions from motor vehicles. The development and commercialization of cleaner vehicles and cleaner fuels represent the first two elements of the strategy. These developments will take many years before cleaner vehicles and fuels dominate the fleet and favorably impact the environment. This document deals with the third element of the strategy, inspection and maintenance, which is aimed at the reduction of emissions from the existing fleet by ensuring that vehicles are maintained to meet the emission standards established by EPA. Properly functioning emission controls are necessary to keep pollution levels low. The driving public is often unable to detect a malfunction of the emission control system. While some minor malfunctions can increase emissions significantly, they do not affect drivability and may go unnoticed for a long period of time. Effective I/M programs can identify excessive emissions and assure repairs. The EPA projects that sophisticated I/M programs such as the one being approved in this rulemaking in Illinois will identify emission related problems and prompt the vehicle owner to obtain timely repairs thus reducing emissions.

The Act requires that polluted cities adopt either a ''basic'' or ''enhanced'' I/M program, depending on the severity of the pollution and the population of the area. Moderate ozone nonattainment areas, plus marginal ozone areas with existing or previously required I/M

programs in Census-defined urbanized areas, fall under the ''basic'' I/M requirements. Basic and enhanced I/M programs both achieve their objective by identifying vehicles that have high emissions as a result of one or more malfunctions, and requiring them to be repaired. An ''enhanced'' I/M program covers more vehicles in operation in the fleet, employs inspection methods which are better at finding high emitting vehicles, and has additional features to better assure that all vehicles are tested properly and effectively repaired. The Act directed EPA to establish a minimum performance standard for enhanced I/M programs. The standard is based on the performance achievable by annual inspections in a centralized test program. States have flexibility to design their own programs if they can show that their program is as effective as the model program used in the performance standard. Naturally, the more effective the program the more credit a State will get towards the emission reduction requirement. An effective program will help to offset emissions associated with growth in vehicle use and allow for industrial and/or commercial growth.

The EPA and the States have learned a great deal about what makes an I/M program effective since the Clean Air Act of 1977 first required I/M programs for polluted areas. There are three major keys to an effective program:

(1) Given the advanced state of current vehicle design and anticipated technology changes, the ability to accurately fail problem vehicles and pass clean ones requires improved test equipment and test procedures;

(2) Comprehensive quality control and aggressive enforcement are essential to assuring the testing is done properly;

(3) Skillful diagnostics and capable mechanics are important to assure that failed cars are fixed properly.

These three factors are missing in most older I/M programs. Specifically, the idle and 2500 RPM/idle short tests and anti-tamper inspections used in current I/M programs are not as effective in identifying and reducing in-use emissions from the types of vehicles in the current and future fleet. Also, covert audits by EPA and State agencies typically discover improper inspection and testing 50 percent of the time in test-and-repair stations indicating poor quality control. Experience has shown that quality control at high-volume test only stations is usually much better. And, finally, diagnostics and mechanics training are often poor or nonexistent.

On November 5, 1992 (57 FR 52950), EPA established a high-tech emission test for high-tech cars. This I/M test, known as the IM240 test, is so effective that biennial test programs yield almost the same emission reduction benefits as annual programs. The test can also accurately measure NO_X emissions where NO_X is important to address an ozone problem. The addition of the pressure and purge test increases the benefit even more and results in lower testing costs and consumer time demands. The pressure test is designed to find leaks in the fuel system, and the purge test evaluates the functionality of the vapor control system. In addition, EPA published changes to the I/M rule in the Federal Register on October 18, 1995, (60 FR 48029) in order to provide greater flexibility to States required to implement I/M programs.

II. Background

The State of Illinois currently contains two ozone nonattainment areas which are required to implement I/M programs in accordance with the Act. The Chicago severe-17 ozone nonattainment area contains the Chicago, Aurora, Crystal Lake, Elgin, Joliet, and Round Lake Beach-McHenry urbanized areas. The Federal I/M rule requires the Chicago urbanized area to implement an enhanced I/M program. Since the I/M rule does not require enhanced I/M programs in severe urbanized areas with a Census population of less than 200,000, the remaining five cities in the Chicago nonattainment area will be required to implement only a basic I/M program based on their 1990 Census-defined urbanized area populations. The East St. Louis moderate ozone nonattainment area contains the Illinois portion of the St. Louis and Alton urbanized areas. Both areas are required to implement a Basic I/M program in the nonattainment area. On June 29, 1995, IEPA submitted to EPA a SIP revision for the implementation of an enhanced I/M program to cover both the Chicago and the East St. Louis nonattainment areas. This submittal includes the Vehicle Emissions Inspection Law of 1995 (625 ILCS 5/13B), P.A. 88–533, which became effective January 18, 1994. That statute provides authority for IEPA to implement an enhanced I/M program and meet EPA's requirements for such a program. P.A. 88–533 mandates enhanced I/M testing for the Metro-East area and certain portions of the Chicago nonattainment area. In addition, the Illinois submittal includes I/M regulations (R94–19 and R94–20) adopted on December 1, 1994, by the Illinois Pollution Control Board (Board), which include emissions standards based upon EPA's preferred IM240 loaded mode exhaust emissions standard. On December 23, 1994, the amended rule for R94–20 was published in the Illinois State Register and its effective date was December 12, 1994. On December 30, 1994, the amended rule R94–19 was published in the Illinois Register and had an effective date of December 14, 1994. On April 22, 1996, IEPA submitted the State's I/M Request-For-Proposal as part of the Illinois SIP submittal. Under the Environmental Protection Act [415 ILCS 5 (1992)], the Board has the authority to adopt air pollution regulations for the State of Illinois. The adopted regulations and the legislation submitted by Illinois changes the existing program from a basic I/M program to a fully enhanced I/M program in both of Illinois' ozone nonattainment areas.

In a proposed rule published in the Federal Register on May 10, 1996 (61 FR 21405), EPA proposed to approve portions of the Illinois enhanced I/M submittal and to conditionally approve other portions as stated below in section III of this notice. The public comment period for the May 10, 1996, notice of proposed rulemaking closed on June 10, 1996, and no comments were received.

III. EPA's Analysis of the Illinois, Enhanced I/M Program

As discussed above, section 182 of the Act requires that States adopt and implement updated regulations for I/M programs in moderate and above ozone nonattainment areas. The following sections of this notice summarize the requirements of the Federal I/M regulations and address whether the elements of the State's submittal comply with the Federal rule.

Applicability—40 CFR 51.350

Section 182(c)(3) of the Act and 40 CFR 51.350(a) require States which contain areas classified as serious or worse ozone nonattainment and containing metropolitan statistical areas (MSAs) with a population of 200,000 or more to implement an enhanced I/M program. As noted above, the State of Illinois contains the Aurora, Chicago, Crystal Lake, Elgin, Joliet, and Round Lake beach-McHenry urbanized areas in its Chicago Severe-17 ozone nonattainment area, but the Chicago urbanized area is the only area which contains a population of more than 200,000, based on 1990 Census data. The remaining urbanized areas in the Chicago nonattainment area with populations less than 200,000 are required to implement a basic I/M program. In addition, section 182(b)(4) of the Act and 40 CFR part 51.530(a) require States with moderate ozone

nonattainment areas containing 1990 census defined urbanized areas to implement a basic I/M program. The State of Illinois contains the East St. Louis moderate nonattainment area where this requirement applies.

The Illinois submittal contains the legal authority and regulations necessary for IEPA to establish the program boundaries and operate an enhanced I/M program in ozone nonattainment areas stated above. P.A. 88–533 specifies the geographic boundaries of the program in both ozone nonattainment areas. The program boundaries described in the Illinois submittal meet the Federal I/M requirements under Sec. 51.350 and are approvable. The Federal I/M regulation requires that the State I/M program must operate until it is no longer necessary. EPA has determined that a SIP which does not terminate prior to the attainment deadline for each applicable area (i.e. 2007 for the Chicago severe-17 ozone nonattainment area, and 1996 for the Metro-East moderate ozone nonattainment area) satisfies this requirement. The State I/M submittal does not contain a termination provision and is therefore approvable. EPA approves this section of the Illinois submittal in this notice.

Enhanced I/M Performance Standard 40 CFR 51.351

The enhanced I/M program must be designed and implemented to meet or exceed a minimum performance standard, expressed in area-wide average grams per mile (gpm), for emission levels of certain pollutants. The performance standard shall be established using local characteristics, such as vehicle mix and local fuel controls, and the following model I/M program parameters: network type, start date, test frequency, model year coverage, vehicle type coverage, exhaust emission test type, emission standards, emission control device, evaporative system function checks, stringency, waiver rate, compliance rate and evaluation date. The emission levels achieved by the State's program design shall be calculated using the most current version, at the time of submittal, of the EPA mobile source emission factor model. At the time of the Illinois submittal, the most current version was MOBILE5a. Areas shall meet or exceed the performance standard for the pollutants which cause them to be subject to I/M requirements. In the case of ozone nonattainment areas, the performance standard must be met for both nitrogen oxides (NO_X) and volatile organic compounds (VOCs). Urban Airshed Modeling (UAM) has been conducted in both the Chicago and St. Louis regions. In the Chicago area, the UAM has demonstrated that control of NO_X within the nonattainment area is counterproductive in controlling ambient ozone. IEPA has petitioned for, and has received from EPA, a waiver from Clean Air Act NO_X control requirements, including the requirement to meet the NO_X enhanced I/M performance standard. EPA is currently in the process of evaluating the UAM data and an IEPA NO_X waiver request for the St. Louis region. NO_X testing will be restricted to tests conducted for program evaluation purposes in accordance with 40 CFR Part 51.353(c).

The June 30, 1995, Illinois submittal includes three alternative enhanced program options based on the use of either ASM5015, ASM2, or IM240 networks. All three options use the following program design parameters: centralized test only network; 1996 start date; biennial frequency; 1968 and newer model year coverage; Vehicle type include LDGV, LDGT1, LDGT2 and HDGV; IM240 for 1981 and newer vehicles, and idle for 1968–1980 LDGV's and LDGT's and 1968 and later HDGV's; purge test on 1981 and newer LDGV's and LDGT's undergoing either ASM or IM240; pressure test of gas cap; stringency rate of 20 percent for 1980 and older vehicles; waiver rate of 3 percent and a 96 percent compliance rate. In the February 29, 1996, Request-For-Proposal, submitted to EPA on April 22, 1996, Illinois further specifies the program to be implemented in the ozone nonattainment areas as one which includes IM240 transient load testing for 1981 and newer vehicles, and an evaporative system integrity test on all vehicles required to be equipped with evaporative controls at the time of manufacture. Such test shall consist of the identification of missing, defective gas caps, and a gas cap leak test.

The Illinois program design parameters meet the Federal I/M regulations and are approvable. The emission levels achieved by the State, for each area, were modeled using MOBILE5a. The modeling demonstration was performed correctly, using local characteristics where available, and it demonstrated that the program design will meet the enhanced I/M performance standard, expressed in grams per mile, for VOCs and NO_X for each milestone and for the attainment deadline. The modeling demonstration submitted by the State is approvable. EPA approves this section of the submittal in this notice.

Network Type and Program Evaluation 40 CFR 51.353

Enhanced I/M programs shall be operated in a centralized test-only format, unless the State can demonstrate that a decentralized program is equally effective in achieving the enhanced I/M performance standard. The enhanced program shall include an ongoing evaluation to quantify the emission reduction benefits of the program and to determine if the program is meeting the requirements of the Act and the Federal I/M regulations. The SIP shall include details on the program evaluation and a schedule for submittal of biennial evaluation reports, data from a State monitored or administered mass emission test of at least 0.1 percent of the vehicles subject to inspection each year, description of the sampling methodology, the data collection and analysis system and the legal authority enabling the evaluation program.

The State legislative authority and the State I/M regulations provide for a centralized, test-only network. Illinois' centralized, test only network type is approvable. The submittal does not, however, include provisions for on-going program evaluation to satisfy all of the requirements of 40 CFR part 51.353. Specifically, the State must submit schedules for program evaluations and methodologies by which this biennial program evaluation will be carried out, as required by 40 CFR part 51.353. EPA is conditionally approving this section of the Illinois enhanced I/M SIP based on the April 22, 1996, letter and phone conversation record committing to submit to EPA as supplemental information in support of the SIP the necessary documentation within one year of today's final conditional approval. In addition, the State has committed to submit to EPA biennial program evaluation reports meeting the requirements of 40 CFR part 51.353 starting at the end of the program's first biennial cycle.

Adequate Tools and Resources 40 CFR 51.354

The Federal I/M regulation requires States to demonstrate that adequate funding of the program is available. A portion of the test fee or a separately assessed per year vehicle fee shall be collected, placed in a dedicated fund and used to finance the program. Alternative funding approaches are acceptable if it is demonstrated that the funding can be maintained. Reliance on funding from a State or local General Fund is not acceptable unless doing otherwise would be a violation of the State's constitution. The SIP shall

include a detailed budget plan which describes the source of funds for personnel, program administration, program enforcement and purchase of equipment. The SIP shall also detail the number of personnel dedicated to the quality assurance program, data analysis, program administration, enforcement, public education and assistance and other necessary functions. P.A. 88–533 prevents the IEPA from charging motor vehicle owners for inspections required under this law. Instead, P.A. 88–533 states that the Vehicle Inspection Fund, which was a fund created in the State treasury for the purpose of receiving money from the Motor Fuel Tax and other sources, shall be used for the payment of the cost of the program, including reimbursement of those agencies of the State that incur expenses in the administration and enforcement of the program. EPA approves this section of the Illinois submittal in this notice.

Test Frequency and Convenience 40 CFR 51.355

The enhanced I/M performance standard assumes an annual test frequency; however, other schedules may be approved if the performance standard is achieved. The SIP shall describe the test year selection scheme and shall include the legal authority, regulations or contract provisions necessary to implement and enforce the test frequency requirement. The program shall be designed to provide convenient service to motorists by ensuring short waiting times, short driving distances and regular testing hours. The Illinois enhanced I/M law of 1995 provides the legal authority to implement and enforce biennial test frequency for all subject vehicles. New vehicles are exempt from testing for two years, requiring the vehicle to be initially tested in the second calendar year after the vehicle model year. Based on the performance standard modeling provide by the State, the enhanced I/M program meets the performance standard accounting for biennial test frequency. P.A. 88–533 also requires that the program be designed so that covered vehicle owners reside within 12 miles of an official inspection station. In addition, the law requires the program to be designed in such a way that sufficient inspection capacity at the station is so that the usual wait before the start of an inspection does not exceed twenty minutes. The test frequency and convenience section is approvable and EPA approves this section of the Illinois submittal in this notice.

Vehicle Coverage 40 CFR 51.356

The performance standard for enhanced I/M programs assumes coverage of all 1968 and newer model year light duty vehicles and light duty trucks up to 8,500 pounds gross vehicle weight rating (GVWR), and includes vehicles operating on all fuel types. Other levels of coverage may be approved if the necessary emission reductions are achieved. Vehicles registered or required to be registered within the I/M program area boundaries, and fleets primarily operated within the I/M program area boundaries belonging to the covered model years and vehicle classes comprise the subject vehicles. Fleets may be officially inspected outside the normal I/M program test facilities, if such alternatives are approved by the program administration, but shall be subject to the same test requirements using the same quality control standards as non-fleet vehicles and shall be inspected in independent, test-only facilities, according to the requirements of 40 CFR part 51.353(a).

The Federal I/M regulation requires that the SIP shall include the legal authority or rule necessary to implement and enforce the vehicle coverage requirement, a detailed description of the number and types of vehicles to be covered by the program and a plan for how those vehicles are to be identified, including vehicles that are routinely operated in the area but may not be registered in the area, and a description of any special exemptions, including the percentage and number of vehicles to be impacted by the exemption.

The Illinois Vehicle Inspection Law of 1995 requires coverage of all 1968 and newer vehicles registered or required to be registered in the I/M program area, except those vehicles which run on diesel or exclusively by electricity. The modeling demonstration submitted with the SIP includes vehicle coverage of LDGV, LDGT1, and LDGT2. The Illinois legislation provides the legal authority to implement and enforce the vehicle coverage. This level of coverage is approvable because it provides the necessary emission reductions. The modeling demonstration does contain estimates of the number of registered vehicles in the area. However, the State's June 29, 1995, SIP submittal does not adequately address fleet testing requirements. Existing legislation allows for the self testing of fleets, but the submittal fails to address the specific requirements involved in fleet testing. The State also did not provide a description of the impact vehicle exemptions will have on the subject fleet. The modeling demonstration submitted by the State does not account for these exemptions in the emission reduction analysis. The State must describe the extent of the exemption's impact, in accordance with 40 CFR part 51.356, in order for EPA to fully approve this section of the State submittal. EPA conditionally approves this section based on the April 22, 1996, letter to EPA committing to address the requirements of 40 CFR 51.356 with regard to fleets, within one year of today's final conditional approval.

Test Procedures and Standards 40 CFR 51.357

Written test procedures and pass/fail standards are required to be established and followed for each model year and vehicle type included in the program. Federal test procedures and standards are found in 40 CFR 51.357 and in the EPA document entitled ''High-Tech I/M Test Procedures, Equipment Standards, Quality Control Requirements, and Equipment Specifications'', EPA–AA–EPSD–IM–93–1, finalized in April, 1994. P.A. 88–533 provides the State the authority to establish test procedures according to the needs of the program. The Illinois submittal also includes I/M regulations (R94–19 and R94–20) adopted on December 1, 1994, by the Illinois Pollution Control Board (Board) which include emissions standards based upon EPA's preferred IM240 loaded mode exhaust emissions standard. IEPA has asked I/M contract bidders to address in detail the requirements of this section in its Request-For-Proposal (RFP). EPA conditionally approves this section of the SIP based on the State's commitment to submit to EPA as supplemental information in support of the SIP its final signed I/M contract addressing the requirements of 40 CFR part 51.357 within one year of today's final conditional approval.

Test Equipment 40 CFR 51.358

The Federal regulation requires computerized test systems for performing any measurement on subject vehicles. The Federal I/M regulations requires that the State SIP submittal include written technical specifications for all test equipment used in the program. The specifications shall describe the emission analysis process, the necessary test equipment, the required features and written acceptance testing criteria and procedures.

P.A. 88–533 provides the general authority for the State to establish the designation of official test equipment

and testing procedures. The Illinois submittal also includes I/M regulations (R94–19 and R94–20) which include emissions standards based upon EPA's preferred IM240 loaded mode exhaust emissions standard. IEPA has addressed the requirements of this section in its RFP released February 29, 1996. EPA conditionally approves this section of the SIP based on the State's April 22, 1996, commitment to submit to EPA as supplemental information in support of the SIP its final signed contract addressing the requirements of 40 CFR part 51.358 within one year of EPA's final conditional approval.

Quality Control 40 CFR 51.359

Quality control measures shall ensure that emission measurement equipment are calibrated and maintained properly, and that inspection, calibration records and control charts are accurately created, recorded and maintained. The Illinois submittal contains general legal authority in P.A. 88–533 which requires IEPA to establish an enhanced program containing procedures to assure the correct operation, maintenance and calibration of test equipment, and also procedures for certifying test results and for reporting and maintaining relevant data and records. Illinois' RFP requires bidders as part of their Technical proposal to submit a Quality Assurance Plan which addresses the requirements of this section. EPA conditionally approves this section of the SIP based on the State's April 22, 1996 commitment to submit to EPA as supplemental information in support of the SIP its final signed contract and the contractor's Quality Assurance Plan addressing the quality control requirements of 40 CFR part 51.359 within one year of EPA's final conditional approval.

Waivers and Compliance Via Diagnostic Inspection 40 CFR 51.360

The Federal I/M regulation allows for the issuance of a waiver, which is a form of compliance with the program requirements that allows a motorist to comply without meeting the applicable test standards, as long as prescribed criteria are met. For enhanced I/M programs, an expenditure of at least $450 in repairs, adjusted annually to reflect the change in the Consumer Price Index (CPI) as of 1989, is required in order to qualify for a waiver. Waivers can only be issued after a vehicle has failed a retest performed after all qualifying repairs have been made. Any available warranty coverage must be used to obtain repairs before expenditures can be counted toward the cost limit. Tampering related repairs shall not be applied toward the cost limit. Repairs must be appropriate to the cause of the failure. Repairs for 1980 and newer model year vehicles must be performed by a recognized repair technician. The Federal regulation allows for compliance via a diagnostic inspection after failing a retest on emissions and requires quality control of waiver issuance. The SIP must set a maximum waiver rate and must describe corrective action that must be taken if the waiver rate exceeds that committed to in the SIP.

The Illinois SIP submittal contains the necessary authority in P.A. 88–533 to issue waivers, set and adjust cost limits, and administer and enforce the waiver system. The Illinois law requires that IEPA certify whether a vehicle that has failed a vehicle emission retest qualifies for a waiver of the emission inspection standards if the following criteria are met: The vehicle has received all repairs and adjustments for which it is eligible under any emission performance warranty provided under section 207 of the Act; IEPA determines by normal inspection procedures that the vehicle's emission control devices are present and appear to be properly connected and operating; consistent with 40 CFR 51.360 for vehicles required to be tested under the Illinois law, a minimum expenditure of $450 in emission-related repairs exclusive of tampering-related repairs have been made; repairs for vehicles of model year 1981 and later are conducted by a recognized repair technician; evidence of repair is presented consisting of either signed and dated receipts identifying the vehicle and describing the work performed and amount charged for eligible emission-related repairs, or an affidavit executed by the person performing the eligible emission related repairs; and that the repairs have resulted in an improvement in vehicle emissions as determined by comparison of initial and final retest results.

The State of Illinois has chosen not to allow compliance via a complete documented physical and functional diagnosis and inspection which shows that no additional emission-related repairs are needed. The State has set a maximum waiver rate of 3 percent for both pre-1981 and for 1981 and later vehicles. Illinois used MOBILE5a and assumed a maximum waiver rate of 3 percent for 1980 and older model year vehicles and 3 percent for 1981 and newer vehicles. In the event the actual waiver rate exceeds the planned maximum used for estimating the emission reduction benefit, the State will need to remodel to assess the emission reduction benefits based on the actual waiver rate. EPA is approving this section of the Illinois submittal in this notice.

Motorist Compliance Enforcement 40 CFR 51.361

The Federal regulations require the use of registration denial to ensure compliance with the requirements of the I/M program unless an exception for use of an alternative is approved. Registration denial enforcement consists of rejecting an application for initial registration or registration for a used vehicle unless the vehicle has complied with the I/M requirements prior to the granting of the application. The SIP shall provide information concerning the enforcement process, legal authority to implement and enforce the program, a commitment to a compliance rate to be used for modeling purposes and to be maintained in practice. The Illinois SIP contains an alternative compliance system to that of registration denial. The Illinois compliance approach uses computer matching of vehicle registration records and inspection records to identify violations. The Illinois Secretary of State (SOS) is required under P.A. 88–533 to suspend either the driving privileges or the vehicle registration, or both, of any vehicle owner who has not complied with the requirements of P.A. 88–533. A suspension under this requirement would not be terminated until proof of compliance has been submitted to the SOS. In the I/M SIP, Illinois commits to the level of motorist enforcement necessary to ensure a compliance rate of no less than 96 percent among subject vehicles in the program area. If it is determined as part of the required program evaluation that the I/M program is not meeting the compliance rate, Illinois will need to investigate the problem and institute changes to improve the compliance rates. EPA approves this section of the Illinois SIP in this notice.

Motorist Compliance Enforcement Program Oversight 40 CFR 51.362

The Federal I/M regulation requires that the enforcement program shall be audited regularly and shall follow effective program management practices, including adjustments to improve operation when necessary. The SIP shall include quality control and quality assurance procedures to be used to insure the effective overall performance of the enforcement system. An information management system shall be established which will characterize, evaluate and enforce the program. The legal authority for the implementation of an I/M program is

found in P.A. 88–53. This statute provides the authority necessary to develop and implement the enforcement program oversight element of the I/M program. EPA conditionally approves this portion of the State's submittal based on the April 22, 1996, letter to EPA committing to addressing the requirements of 40 CFR part 51.362 within one year of today's final conditional approval.

Quality Assurance 40 CFR 51.363

An ongoing quality assurance program shall be implemented to discover, correct and prevent fraud, waste, and abuse in the program. The program shall include covert and overt performance audits of the inspectors, audits of station and inspector records, equipment audits, and formal training of all state I/M enforcement officials and auditors. A description of the quality assurance program which includes written procedure manuals on the above discussed items must be submitted as part of the SIP. The Illinois submittal contains only a general provision under P.A. 88–533 which requires that the State I/M program provide for procedures to assure the correct operation, maintenance, and calibration of test equipment. Illinois' RFP requires bidders as part of their Technical proposal to submit a Quality Assurance Plan which addresses the requirements of this section. EPA conditionally approves this section of the SIP based on the State's April 22, 1996 commitment to submit to EPA as supplemental information in support of the SIP its final signed contract and the contractor's Quality Assurance Plan addressing the quality assurance requirements of 40 CFR part 51.363 within one year of EPA's final conditional approval.

Enforcement Against Contractors, Stations and Inspectors 40 CFR 51.364

Enforcement against licensed stations or contractors and inspectors shall include swift, sure, consistent penalties for violation of program requirements. The Federal I/M regulation requires the establishment of minimum penalties for violations of program rules and procedures which can be imposed against stations, contractors and inspectors. The legal authority for establishing and imposing penalties, civil fines, licence suspensions and revocations must be included in the SIP. State quality assurance officials shall have the authority to temporarily suspend station and/or inspector licenses immediately upon finding a violation that directly affects emission reduction benefits. The SIP shall describe the administrative and judicial procedures and responsibilities relevant to the enforcement process. The Illinois submittal includes the legal authority to establish and impose penalties against station, contractors, and inspectors. In addition, the RFP contains detailed provisions addressing the requirements of this section, including specific monetary penalties established for violation of program rules and procedures. The provisions found in the RFP will be enforceable once a final I/M contract is developed and signed. EPA conditionally approves this section of the SIP based on the State's April 22, 1996 commitment to submit to EPA as supplemental information in support of the SIP its final signed contract and any necessary administrative rules addressing the requirements of 40 CFR part 51.364 within one year of EPA's final conditional approval.

Data Collection 40 CFR 51.365

In order to manage, evaluate and enforce the program requirements an effective I/M program requires accurate data collection. The Federal I/M regulation requires data to be gathered on each individual test conducted and on the results of the quality control checks of test equipment required under 40 CFR part 51.359. The Illinois submittal contains a general provision under P.A. 88–533 which requires that the State I/M program provide for procedures for certifying test results and for reporting and maintaining relevant data and records. In addition, the RFP requires that the contractor submit to IEPA, on a monthly basis, a file containing detailed data for each vehicle test transaction conducted. The data collection requirements specified in the RFP meet those specified in 40 CFR part 51.365. Once the final I/M contract is submitted to EPA as supplemental information in support of the SIP this section of the I/M SIP can be fully approved. At this time, EPA conditionally approves this section of the SIP based on the State's April 22, 1996 commitment to submit to EPA as supplemental information in support of the SIP its final signed contract addressing the data collection requirements of 40 CFR part 51.365 within one year of EPA's final conditional approval.

Data Analysis and Reporting 40 CFR 51.366

Data analysis and reporting are required in order to monitor and evaluate the program by the State and EPA. The Federal I/M rule requires annual reports to be submitted to EPA that provide information and statistics and summarize activities performed for each of the following programs: testing, quality assurance, quality control and enforcement. These reports are to be submitted by July of each year and shall provide statistics for the period of January to December of the previous year. A biennial report shall be submitted to EPA that addresses changes in the program design, regulations, legal authority, program procedures, any weaknesses in the program found during the previous two year period and how these problems will be or were corrected. The Illinois RFP contains the necessary provisions addressing the requirements of this section. However, in order to receive full approval, the State must submit its final, signed contract as supplemental information in support of the SIP addressing the requirements of 40 CFR part 51.366 to EPA within one year of EPA's final conditional approval. EPA conditionally approves this section of the SIP based on the State's April 22, 1996 commitment to submit to EPA as supplemental information in support of the SIP its final signed contract addressing the data analysis and reporting requirements of 40 CFR part 51.366 within the time frame specified above.

Inspector Training and Licensing or Certification 40 CFR 51.367

The Federal I/M regulation requires all inspectors to be formally trained and licensed or certified to conduct inspections. The Illinois P.A. 88–533 requires all inspectors to be certified by IEPA after successfully completing a course of training and successfully passing a written test. The RFP requires Bidders to include in their Technical Proposal a detailed Management Plan for the implementation and operation of the contracted elements of the Illinois enhanced I/M program. The Management Plan must include as part of its elements, a description of the Personnel Training and Certification Program as described in the RFP. The RFP requires the Contractor to establish and operate an on-going program to train and certify contractor and IEPA personnel. EPA conditionally approves this section of the SIP based on the State's April 22, 1996 commitment to submit to EPA as supplemental information in support of the SIP its final signed contract and the contractor's Management Plan addressing the requirements of 40 CFR part 51.367 within one year of EPA's final conditional approval.

Public Information and Consumer Protection 40 CFR 51.368

The Federal I/M regulation requires the SIP to include a public information and consumer protection programs. The submittal needs to include a public information program, which educates the public on I/M, State, and Federal regulations, air quality, the contribution of motor vehicles to the air pollution problem, and other items as described in the Federal rule. A consumer protection program, which includes provisions for a challenge mechanism, protection of whistle blowers and assistance to motorists in obtaining warranty covered repair, will also need to be addressed. The Illinois submittal contains the legal authority establishing grievance procedures for consumers to use, but it does not address the rest of the requirements stated above for this section. In order to receive full approval, the State has committed in IEPA's April 22, 1996, letter to submit the remaining provisions of the public information program within one year from EPA's final conditional approval. EPA conditionally approves this portion of the SIP based on the State's commitment to address the requirements of this section within the time frame stated above.

Improving Repair Effectiveness 40 CFR 51.369

Effective repairs are the key to achieving program goals. The Federal regulation requires states to take steps to ensure that the capability exists in the repair industry to repair vehicles. The SIP must include a description of the technical assistance program to be implemented, a description of the procedures and criteria to be used in meeting the performance monitoring requirements required in the Federal regulation and a description of the repair technician training resources available in the community. The Illinois submittal does not contain any provisions addressing the requirements of this section, however the State has submitted a commitment to address the requirements of this section, including the submittal of a description of available technician training resources, within one year of EPA's final conditional approval. EPA is conditionally approving this portion of the State submittal based on the State's commitment to submit the necessary documentation to EPA in the time frame stated above.

Compliance With Recall Notices 40 CFR 51.370

States are required to establish a method to ensure that vehicles subject to enhanced I/M and that are included in either a voluntary emissions recall as defined at 40 CFR 85.1902(d), or in a remedial plan determination made pursuant to section 207(c) of the Act, receive the required repairs prior to completing the emission test or renewing the vehicle registration. The Illinois P.A. 88–533 provides the legal authority to require owners to comply with emission related recalls before completing the emission test. The Illinois RFP requires that the contractor provide and maintain as part of the data handling system a means to identify vehicles with unresolved emissions recalls based upon the data provided by EPA. At a minimum, the Contractor and IEPA will have the capability to store, retrieve, and update recall data that consists of the VIN, the numbers of the recall campaign, and the date that the repairs were performed. The system is to be capable of interactively updating vehicle and/or recall database records based upon information supplied by vehicle owners indicating that required repairs have been made. The system will also be capable of updating appropriate records based upon updated data provided by EPA. EPA conditionally approves this section of the SIP based on the State's April 22, 1996 commitment to submit to EPA as supplemental information in support of the SIP its final signed contract addressing the annual reporting requirements of 40 CFR part 51.370 within one year of EPA's final conditional approval.

On-Road Testing 40 CFR 51.371

On-road testing is required in enhanced I/M areas. The use of either remote sensing devices (RSD) or roadside pullovers including tailpipe emission testing can be used to meet the Federal regulations. The program must include on-road testing of 0.5 percent of the subject fleet or 20,000 vehicles, whichever is less, in the nonattainment area or the I/M program area. Motorists that have passed an emission test and are found to be high emitters as a result of a on-road test shall be required to pass an out-of-cycle test. The Illinois P.A. 88–533 requires on-road testing through the use of remote sensing devices. The SIP submittal requires the use of RSD to test at least 0.5 percent of the subject fleet per year in the I/M program area. The RFP requires that the Contractor develop and maintain written on-road inspection procedures to be approved by IEPA. In addition, the Contractor is to provide and maintain as part of the system on-road testing information containing vehicle and test results obtained from the on-road testing program. The Contractor will be responsible for evaluating all on-road emission data, including linking emissions data with vehicle database records. EPA conditionally approves this section of the SIP based on the State's April 22, 1996 commitment to submit to EPA as supplemental information in support of the SIP its final signed contract addressing the on-road testing specifications of 40 CFR part 51.371 within one year of EPA's final conditional approval.

Rulemaking Action

EPA is approving portions and conditionally approving other portions of this revision to the Illinois SIP for an enhanced I/M program, as cited above. The public comment period for the May 10, 1996, notice of proposed rulemaking closed on June 10, 1996, and no comments were received. If Illinois fails to timely submit the materials discussed above within one year of EPA's final conditional approval, the final conditional approval will automatically convert to a disapproval.

I. Basis for Conditional Approval

The EPA believes conditional approval is appropriate in this case because the State has the necessary legal authority for an enhanced I/M program and needs only to award the I/M contract and amend current administrative rules to address a number of enhanced I/M program requirements. As a condition of EPA's conditional approval, the State must submit a final signed I/M contract as supplemental information in support of the SIP and any additional material necessary to address the deficiencies identified in this document to EPA no later than one year after today's final conditional approval. On April 22, 1996, the IEPA submitted a letter committing to this. In the letter IEPA commits to provide EPA the signed enhanced I/M contract, in addition to provide appropriate analyses, calculations, and rules as discussed in a conference call on April 9, 1996 between IEPA and EPA. The telephone conversation record of this call will be included as part of the Illinois SIP.

II. Statement of Approvability

Under the authority of the Governor of Illinois, the IEPA submitted a SIP revision to satisfy the requirements of the I/M regulation to the EPA on June 29, 1995. EPA found the Illinois SIP

complete in a letter dated June 30, 1995. The EPA has reviewed this submittal and is approving portions and conditionally approving other portions of it pursuant to Section 110(k) of the Act, on the condition that the portions of the I/M program noted above are adopted and/or submitted on the schedules noted in this final rulemaking. Once EPA takes final conditional approval on the commitment, the State must meet its commitment to submit the final I/M contract and all other supporting documentation within one year of the conditional approval. Once the EPA has conditionally approved this committal, if the State fails to submit any necessary rules and/or documentation to EPA, final conditional approval will automatically convert to a disapproval. EPA will notify the State by letter to this effect. Once the SIP has been disapproved, these commitments will no longer be a part of the approved nonattainment area SIPs. The EPA subsequently will publish a notice to this effect in the notice section of the Federal Register indicating that the commitment or commitments have been disapproved and removed from the SIP. If the State adopts and submits the final rule amendments and the final I/M contract, as supplemental information in support of the SIP, to EPA within the applicable time frame, the conditionally approved commitments will remain part of the SIP until the EPA takes final action approving or disapproving the new submittal. If the EPA approves the subsequent submittal, those newly approved rules and/or documentation will become part of the SIP.

If after considering the comments on the subsequent submittal, the EPA issues a final disapproval or if the conditional approval portions are converted to a disapproval, the sanctions clock under section 179(a) will begin. If the State does not submit and EPA does not approve the rule on which any disapproval is based within 18 months of the disapproval, the EPA must impose one of the sanctions under section 179(b)-highway funding restrictions or the offset sanction. In addition, any final disapproval would start the 24 month clock for the imposition of a section 110(c) Federal Implementation Plan. Finally, under section 110(m) the EPA has discretionary authority to impose sanctions at any time after a final disapproval.

EPA finds that there is good cause for this final conditional approval to become effective immediately upon publication because a delayed effective date is unnecessary due to the nature of a conditional approval, which requires that the State make certain submittals within one year of the final conditional approval. Any delay in the effective date of this conditional approval further delays the compliance date by which the State has to submit the documentation committed to in this notice. The immediate effective date for this SIP approval is authorized under both 5 U.S.C. 553(d)(1), which provides that rulemaking actions may become effective less than 30 days after publication if the rule ''grants or recognizes an exemption or relieves a restriction'' and section 553(d)(3), which allows an effective date less than 30 days after publication ''as otherwise provided by the agency for good cause found and published in the rule.'' Under the Regulatory Flexibility Act, 5 U.S.C. 600 et seq., EPA must prepare a regulatory flexibility analysis assessing the impact of any proposed or final rule on small entities. 5 U.S.C. 603 and 604. Alternatively, EPA may certify that the rule will not have a significant impact on a substantial number of small entities. Small entities include small businesses, small not-for-profit enterprises, and government entities with jurisdiction over populations of less than 50,000.

SIP approvals under 110 and subchapter I, Part D of the CAA do not create any new requirements, but simply approve requirements that the State is already imposing. Therefore, because the Federal SIP approval does not impose any new requirements, I certify that it does not have a significant impact on any small entities affected. Moreover, due to the nature of the Federal-state relationship under the CAA, preparation of a regulatory flexibility analysis would constitute Federal inquiry into the economic reasonableness of state action. The CAA forbids EPA to base its actions concerning SIPs on such grounds. Union Electric Co. v. U.S. E.P.A., 427 U.S. 246, 256–66 (S.Ct. 1976); 42 U.S.C. 7410(a)(2) and 7410(k)(3).

Section 202 of the Unfunded Mandates Reform Act of 1995 (''Unfunded Mandates Act'') (signed into law on March 22, 1995) requires that the EPA prepare a budgetary impact statement before promulgating a rule that includes a Federal mandate that may result in expenditure by State, local, and tribal governments, in aggregate, or by the private sector, of $100 million or more in any one year. Section 203 requires the EPA to establish a plan for obtaining input from and informing, educating, and advising any small governments that may be significantly or uniquely affected by the rule.

Under section 205 of the Unfunded Mandates Act, the EPA must identify and consider a reasonable number of regulatory alternatives before promulgating a rule for which a budgetary impact statement must be prepared. The EPA must select from those alternatives the least costly, most cost-effective, or least burdensome alternative that achieves the objectives of the rule, unless the EPA explains why this alternative is not selected or the selection of this alternative is inconsistent with law.

Because this final rule is estimated to result in the expenditure by State, local, and tribal governments or the private sector of less then $100 million in any one year, the EPA has not prepared a budgetary impact statement or specifically addressed the selection of the least costly, most cost-effective, or least burdensome alternative. Because small governments will not be significantly or uniquely affected by this rule, the EPA is not required to develop a plan with regard to small governments. It imposes no additional requirements. The Office of Management and Budget has exempted this action rule from Executive Order 12866 review.

Submission to Congress and the General Accounting Office

Under section 801(a)(1)(A) of the Administrative Procedure Act (APA) as amended by the Small Business Regulatory Enforcement Fairness Act of 1996, EPA submitted a report containing this rule and other required information to the U.S. Senate, the U.S. House of Representatives and the Comptroller General of the General Accounting Office prior to publication of this rule in today's Federal Register. This rule is not a ''major rule'' as defined by section 804(2) of the APA as amended.

List of Subjects in 40 CFR Part 52

Environmental protection, Air pollution control, Incorporation by reference, Carbon monoxide, Nitrogen Oxide, Ozone, Volatile Organic Compound.

Dated: June 17, 1996.

David A. Ullrich,

Acting Regional Administrator.

Part 52, chapter I, title 40 of the Code of Federal Regulations is amended as follows:

PART 52—[AMENDED]

1. The authority citation for part 52 continues to read as follows:

Authority: 42 U.S.C. 7401–7671q.

Subpart O—Illinois

2. Section 52.726 is amended by adding paragraph (m) to read as follows:

§ 52.726 Control Strategy: Ozone.

* * * * *

(j) On June 29, 1995, and April 22, 1996, the Illinois Environmental Protection Agency (IEPA) submitted enhanced inspection and maintenance (I/M) legislation, rules, and a Request-For-Proposal (RFP) as a revision to the State's ozone State Implementation Plan (SIP). The EPA conditionally approved the SIP revision based on the State's commitment to submit to EPA the signed enhanced I/M contract, in addition to provide appropriate analyses, calculations, and rules necessary to address deficiencies noted in the final conditional approval. The final signed contract and any supporting documentation needed to address the deficiencies must be submitted to EPA within one year of the EPA's conditional approval.

3. Section 52.720 is amended by adding paragraphs (c)(130) to read as follows:

§ 52.720 Identification of plan.

(c) * * *

(130) On June 29, 1995, the State of Illinois submitted a revision to the State Implementation Plan (SIP) for the implementation of an enhanced motor vehicle inspection and maintenance (I/M) program in the Chicago and East St. Louis ozone nonattainment areas. This revision included the Vehicle Emissions Inspection Law of 1995 (625 ILCS 5/13B), P.A. 88–533, effective January 18, 1995; I/M regulations (R94–19 and R94–20) adopted on December 1, 1994, by the Illinois Pollution Control Board; February 29, 1996, Request-For-Proposals; April 22, 1996, letter of commitment; plus additional support documentation including modeling demonstration.

(i) *Incorporation by reference.*

(A) Vehicle Emissions Inspection Law of 1995 (625 ILCS 5/13B), Public Act 88–533, signed into law by Governor Edgar on January 18, 1995 effective January 18, 1995.

(B) 35 Illinois Administrative Code 240; Sections 240.101, 240.102, 240.104, 240.105, 240.106, 240.107, 240.124, 240.125, 240.151, 240.152, 240.153, 240.161, 240.162, 240.163, 240.164, 240.171, 240.Table A, 240.Table B amended or added in R94–19 at 18 Ill. Reg. 18228, effective December 14, 1994.

(C) 35 Illinois Administrative Code 240; Sections 240.172, 240.173 amended in R94–20 at 18 Ill. Reg. 18013, effective December 12, 1994.

(ii) *Additional Materials.*

(A) February 29, 1996, Request-For-Proposals submitted on April 22, 1996.

(B) April 22, 1996, letter of commitment and attachments from IEPA's Bureau of Air Chief to the USEPA's Regional Air and Radiation Division Director.

[FR Doc. 96–18758 Filed 7–24–96; 8:45 am]

BILLING CODE 6560–50–P

---

40 CFR Part 52

[LA–8–1–6391; FRL–5525–8]

Approval and Promulgation of Implementation Plans; Louisiana State Implementation Plan Revision; Major Source Definition Corrections for Reasonably Available Control Technology (RACT) Rules; Volatile Organic Compounds (VOC) RACT Catch-Ups

AGENCY: Environmental Protection Agency (EPA).

ACTION: Final rule.

SUMMARY: The EPA is approving revisions to the Louisiana State Implementation Plan (SIP) adopted by the Louisiana Department of Environmental Quality on October 20, 1992, and March 26, 1993. This SIP revision contains regulations which require the implementation of RACT for various types of VOC sources. The intended effect of this action is to approve these revisions to the VOC regulations. This action is being taken under section 110 and subchapter I, Part D, of the Clean Air Act as amended in 1990 (the Act).

EFFECTIVE DATE: This final rule is effective on August 26, 1996.

ADDRESSES: Copies of the documents relevant to this action are available for inspection during normal hours at the following locations:

Environmental Protection Agency, Region 6, Air Planning Section (6PD–L), 1445 Ross Avenue, Suite 700, Dallas, Texas 75202–2733.

Air and Radiation Docket and Information Center, Environmental Protection Agency, 401 M Street, SW., Washington, DC 20460.

Louisiana Department of Environmental Quality, Office of Air Quality, 7290 Bluebonnet Boulevard, Baton Rouge, Louisiana 70810.

Anyone wishing to review this petition at the EPA office is asked to contact the person below to schedule an appointment 24 hours in advance.

FOR FURTHER INFORMATION CONTACT: Lt. Mick Cote, Air Planning Section (6PD–L), Environmental Protection Agency, Region 6, 1445 Ross Avenue, Dallas, Texas 75202–2733, telephone (214) 665–7219.

SUPPLEMENTARY INFORMATION:

Background

On April 11, 1994, the EPA published a notice of proposed rulemaking (NPR) for the State of Louisiana in the Federal Register (FR). *See* 59 FR 17078. The NPR proposed approval of RACT revisions to the SIP regulations concerning the control of VOC emissions. The SIP revision was submitted by the State of Louisiana on November 10, 1992, with a subsequent submittal on March 26, 1993.

Specific requirements of the revised VOC regulations and the rationale for the EPA's proposed action are explained in the NPR and will not be restated here. No public comments were received on the NPR. The EPA's approval of these revisions was contingent on the State's submission to the EPA of a negative declaration stating that no non-Control Techniques Guidelines sources exist in the Baton Rouge nonattainment area which have a potential to emit of 50 tons per year or more of VOCs, and that none are expected. The State of Louisiana verified that no such sources exist and submitted a letter of negative declaration to the EPA on March 29, 1994.

Final Action

The EPA has evaluated the State's submittal for consistency with the Act. The EPA has determined that the revised rules meet the Act's requirements and today is approving the SIP revision under section 110(k)(3) of the Act.

Regulatory Process

Under the Regulatory Flexibility Act, 5 U.S.C. 600 *et seq.*, the EPA must prepare a regulatory flexibility analysis assessing the impact of any proposed or final rule on small entities. See 5 U.S.C. 603 and 604. Alternatively, under 5 U.S.C. 605(b), the EPA may certify that the rule will not have a significant impact on a substantial number of small entities. *See* 46 FR 18709. Small entities include small businesses, small not-for-profit enterprises, and governmental entities with jurisdiction over populations of less than 50,000.

The SIP approvals under section 110 and subchapter I, part D of the Act do not create any new requirements, but simply approve requirements that the State is already imposing. Therefore, because the Federal SIP-approval does

not impose any new requirements, I certify that it does not have a significant impact on small entities. Moreover, due to the nature of the Federal-State relationship under the Act, preparation of a regulatory flexibility analysis would constitute Federal inquiry into the economic reasonableness of State action. The Act forbids the EPA from basing its actions concerning SIPs on such grounds. *Union Electric Co.* v. *U.S. E.P.A.*, 427 U.S. 246, 256–66 (S.Ct. 1976); 42 U.S.C. section 7410(a)(2). The Office of Management and Budget (OMB) has exempted this action from review under Executive Order 12866.

Under section 307(b)(1) of the Act, petitions for judicial review of this action must be filed in the United States Court of Appeals for the appropriate circuit by September 23, 1996. Filing a petition for reconsideration of this final rule by the Regional Administrator does not affect the finality of this rule for purposes of judicial review; nor does it extend the time within which a petition for judicial review may be filed, or postpone the effectiveness of this rule. This action may not be challenged later in proceedings to enforce its requirements. *See* section 307(b)(2) of the Act.

Nothing in this action shall be construed as permitting, allowing, or establishing a precedent for any future request for a revision to any SIP. Each request for revision to the SIP shall be considered separately in light of specific technical, economic, and environmental factors and in relation to relevant statutory and regulatory requirements.

Unfunded Mandates

Under sections 202, 203, and 205 of the Unfunded Mandates Reform Act of 1995, signed into law on March 22, 1995, the EPA must undertake various actions in association with proposed or final rules that include a Federal mandate that may result in estimated costs of $100 million or more to the private sector, or to State, local, or tribal governments in the aggregate.

Through submission of this SIP or plan revision approved in this action, the State and any affected local or tribal governments have elected to adopt the program provided for under section 175A of the Act. The rules and commitments approved in this action may bind State, local, and tribal governments to perform certain actions and also require the private sector to perform certain duties. To the extent that the rules and commitments being approved by this action will impose or lead to the imposition of any mandate upon the State, local, or tribal governments, either as the owner or operator of a source or as a regulator, or would impose or lead to the imposition of any mandate upon the private sector, the EPA's action will impose no new requirements; such sources are already subject to these requirements under State law. Accordingly, no additional costs to State, local, or tribal governments, or to the private sector, result from this action. Therefore, the EPA has determined that this final action does not include a mandate that may result in estimated costs of $100 million or more to State, local, or tribal governments in the aggregate or to the private sector.

Submission to Congress and the General Accounting Office

Under section 801(a)(1)(A) of the Administrative Procedures Act (APA) as amended by the Small Business Regulatory Enforcement Fairness Act of 1996, the EPA submitted a report containing this rule and other required information to the U.S. Senate, the U.S. House of Representatives and the Comptroller General of the General Accounting Office prior to publication of the rule in today's Federal Register. This rule is not a ''major rule'' as defined by section 804(2) of the APA as amended.

SIP Actions Exempt from OMB Review

This action has been classified for signature by the Regional Administrator under the procedures published in the Federal Register on January 19, 1989 (54 FR 2214–2225), as revised by a July 10, 1995, memorandum from Mary Nichols, Assistant Administrator for Air and Radiation. The OMB has exempted this regulatory action from Executive Order 12866 review.

List of Subjects in 40 CFR Part 52

Environmental protection, Air pollution control, Hydrocarbons, Incorporation by reference, Intergovernmental regulations, Reporting and recordkeeping, Ozone, Volatile organic compounds.

Dated: June 12, 1996.

Allyn M. Davis,

Acting Regional Administrator.

40 CFR part 52 is amended as follows:

PART 52—[AMENDED]

1. The authority citation for part 52 continues to read as follows:

Authority: 42 U.S.C. 7401–7671q.

Subpart T—Louisiana

2. Section 52.970 is amended by adding paragraph (c)(64) to read as follows:

§ 52.970 Identification of plan.

* * * * *

(c) * * *

(64) Revisions to the Louisiana SIP addressing VOC RACT catch-up requirements were submitted by the Governor of Louisiana by letters dated December 21, 1992, and April 13, 1993.

(i) Incorporation by reference.

(A) Revisions to LAC, Title 33, Environmental Quality, Part III. Air; Chapter 21. Control of Emissions of Organic Compounds, Subchapter A. General; section 2103. Storage of Volatile Organic Compounds, paragraphs G., G.1., G.4.; section 2109. Oil/Water Separation, paragraph B.4.; section 2215. Waste Gas Disposal, introductory paragraph, paragraph H., H.5.; Subchapter B. Organic Solvents; section 2123. Organic Solvents, paragraph D.6.; Subchapter C. Vapor Degreasers; section 2125. Vapor Degreasers, paragraph D.; Subchapter F. Gasoline Handling; section 2131. Filling of Gasoline Storage Vessels, paragraphs D., D.1., D.3., G.; section 2135. Bulk Gasoline Terminals, paragraph A.; Subchapter H. Graphic Arts; section 2143. Graphic Arts (Printing) by Rotogravure and Flexographic Processes, paragraph B, as adopted by LDEQ on October 20, 1992.

(B) Revisions to LAC, Title 33, Environmental Quality, Part III. Air; Chapter 21. Control of Emissions of Organic Compounds, Subchapter A. General; section 2115. Waste Gas Disposal, introductory paragraph, paragraphs H.1., H.1.a. through H.1.d., H.2., H.2.a., H.2.b., H.3., L., as adopted by LDEQ on March 20, 1993.

(ii) Additional material.

(A) Letters dated November 10, 1992 and December 21, 1992, signed by Edwin Edwards, Governor of Louisiana.

(B) Letter dated April 14, 1993, signed by Edwin Edwards, Governor of Louisiana.

(C) Letter of negative declaration dated March 29, 1994, signed by Gustave Von Boduungen, P.E., Assistant Secretary, LDEQ.

* * * * *

[FR Doc. 96–18641 Filed 7–24–96; 8:45 am]

BILLING CODE 6560–50–P

---

40 CFR Part 52

[Region II Docket No. 142; SIPTRAX NJ15–2–6920, FRL–5524–3]

Approval and Promulgation of Implementation Plans; Revision to the New Jersey State Implementation Plan for Carbon Monoxide

AGENCY: Environmental Protection Agency (EPA).

ACTION: Final rule.

SUMMARY: This document takes final EPA action on certain elements of a request by the State of New Jersey to revise its State Implementation Plan (SIP) for carbon monoxide. EPA is approving New Jersey's vehicle miles travelled forecast and multi-state coordination commitment and is giving a limited approval to New Jersey's new source review regulation, which covers all nonattainment pollutants. EPA will be taking future action on New Jersey's attainment demonstration and enhanced inspection and maintenance program in a separate Federal Register document. In a December 7, 1995 document EPA approved New Jersey's contingency measures and statewide emissions inventory. The contingency measures include transportation control measures which cover traffic flow improvements, park & ride lots, and increased ridesharing. In a February 12, 1996 document EPA approved New Jersey's oxygenated fuels rule. These revisions were required by the Clean Air Act as amended in 1990 and will contribute towards attaining the carbon monoxide standard.

EFFECTIVE DATE: This action is effective August 26, 1996.

ADDRESSES: Copies of New Jersey's submittals are available at the following addresses for inspection during normal business hours:

Environmental Protection Agency, Region II Office, Library, 16th Floor, 290 Broadway, New York, New York 10007–1866.

New Jersey Department of Environmental Protection, Bureau of Air Quality Planning, 401 East State Street, CN027, Trenton, New Jersey 08625.

Environmental Protection Agency, Air and Radiation Docket and Information Center (Air Docket 6102), 401 M Street, SW., Washington, DC 20460.

FOR FURTHER INFORMATION CONTACT: Henry Feingersh, Air Programs Branch, Environmental Protection Agency, 290 Broadway, New York, New York 10007–1866, (212) 637–4249.

SUPPLEMENTARY INFORMATION:

Background

The Clean Air Act, as amended in 1990, sets forth a number of requirements that states had to submit as revisions to their State Implementation Plans (SIPs) by November 15, 1992 for areas designated as moderate nonattainment for carbon monoxide. These requirements are: an attainment demonstration, an enhanced vehicle inspection and maintenance (I/M) program, an oxygenated fuels rule, a vehicle miles travelled forecast, contingency measures, a carbon monoxide emission inventory, a revised new source review program, and a multi-state coordination letter.

EPA has issued a ''General Preamble'' describing its preliminary views on how it intends to review SIPs and SIP revisions submitted in order to meet Title I requirements [see generally 57 FR 13498 (April 16, 1992) and 57 FR 18070 (April 28, 1992)]. The reader should refer to the General Preamble for a more detailed discussion of the Title I requirements and what EPA views as necessary to adequately comply with Title I provisions.

On November 15, 1992, New Jersey submitted to EPA proposed revisions to its carbon monoxide SIP that addressed each of the above requirements for its two moderate carbon monoxide nonattainment areas. In addition, in a submittal dated October 4, 1993, New Jersey submitted to EPA information on transportation control measures which New Jersey will use as a contingency measure.

The New Jersey portion of the New York-Northern New Jersey-Long Island carbon monoxide nonattainment area is classified as a Moderate 2 area (an area that has a design value of 12.8–16.4 ppm). The New York-Northern New Jersey-Long Island carbon monoxide nonattainment area is part of the New York-Northern New Jersey-Long Island Consolidated Metropolitan Statistical Area and includes the counties of Bergen, Essex, Hudson, Union, and parts of Passaic County. The nonattainment area in Passaic County includes the cities of Clifton, Paterson, and Passaic. The remainder of the State is in attainment for carbon monoxide.

EPA published its proposed action on those parts of the New Jersey submittal covered by this document on November 10, 1994 (59 FR 56019). The reader is referred to that proposal for a detailed discussion of EPA's action. Comments were due by December 10, 1994. The State of New Jersey was the only commenter.

Public Comment

All of New Jersey's comments concerned EPA's proposed action on the State's Subchapter 18, ''Control and Prohibition of Air Pollution From New or Altered Sources Affecting Ambient Air Quality (Emission Offset Rules)'' (new source review regulation). In its November 10, 1994 Federal Register document EPA noted that New Jersey's Subchapter 18 lacked certain elements which are summarized as follows:

1. A provision that requires changes in existing permits providing offsets to be in effect by the time of permit issuance;
2. A process that provides information from nonattainment new source review permits to EPA's control technology clearinghouse;
3. A definition of ''stationary source'' which excludes the new category of ''nonroad engines;''
4. Provisions for modifications in serious and severe ozone nonattainment areas required under sections 182(c)(6), (7) and (8) of the Clean Air Act;
5. A net air quality benefit test;
6. A methodology for calculating net emissions increase that adheres to EPA guidance and policy; and
7. Definitions for ''initiation of construction'' and ''initiation of operation.''

The November 10, 1994 Federal Register proposal contains detailed information on each of the aforementioned items.

The State commented that it will revise its regulations to address Items 1, 2, 5, and 7 on an expedited schedule and is currently doing so. However, the State has requested guidance from EPA on issues associated with Items 3, 4 and 6. As a result, there are still deficiencies in the rule that need to be corrected before it can be fully approved. It is EPA's position that these deficiencies must be addressed expeditiously. Until they are, the requirements related to the afore-referenced elements are currently in effect under the authority of the Clean Air Act, even in the absence of an applicable implementation plan addressing these requirements.

In the interim, EPA is moving forward by finalizing its proposed limited approval of New Jersey's new source review rule because it strengthens the existing New Jersey SIP by incorporating Clean Air Act requirements. Such requirements include, but are not limited to, new offset ratios, new applicability thresholds, and the NO_X requirements of section 182(f) for most ozone nonattainment areas.

Vehicle Miles Travelled Forecast

The New Jersey SIP is required under section 187(a)(2)(A) of the Clean Air Act to include a forecast of vehicle miles travelled through the year 1995. In addition, annual reports and annual updates are required of the State; the first of these was required by September 30, 1994. EPA finds that New Jersey has submitted documentation satisfying these requirements, and therefore, is approving New Jersey's vehicle miles travelled forecast SIP revision.

Multi-State Coordination

The New Jersey SIP is required under section 187(e) of the Clean Air Act to include a joint workplan to demonstrate early cooperation and integration of all states in the nonattainment area. This workplan consisted of a letter signed by former Director Nancy Wittenberg containing a detailed schedule of milestones and a commitment to coordinate with EPA and each of the states involved. EPA finds that New Jersey has fulfilled this requirement and approves the multi-state coordination commitment.

Further Action

EPA will be taking action on New Jersey's Subchapter 18, enhanced inspection and maintenance program, attainment demonstration, and conformity rules in future Federal Register documents.

New Jersey is currently in the process of adopting an enhanced inspection and maintenance program. Once this is submitted as a SIP revision and approved by EPA, the attainment demonstration (which relies on credit from the enhanced inspection and maintenance program) would also be acted upon by EPA.

Conclusion

EPA is fully approving New Jersey's vehicle miles travelled forecast and the multi-state coordination as revisions to New Jersey's carbon monoxide SIP. In addition, EPA is giving limited approval to New Jersey's Subchapter 18, ''Control and Prohibition of Air Pollution from New or Altered Sources Affecting Ambient Air Quality (Emission Offset Rules)'' effective March 15, 1993.

Once the remaining elements are approved, EPA can give a full approval to the carbon monoxide SIP. Therefore, EPA can only give the New Jersey carbon monoxide SIP a limited approval until action is taken on the remaining elements.

This document is issued as required by section 110 of the Clean Air Act, as amended. The Administrator's decision regarding the approval of this plan revision is based on its meeting the requirements of section 110 of the Clean Air Act, and 40 CFR Part 51.

Nothing in this rule should be construed as permitting or allowing or establishing a precedent for any future request for revision to any SIP. Each request for revision to any SIP shall be considered separately in light of specific technical, economic, and environmental factors and in relation to relevant statutory and regulatory requirements.

Under the Regulatory Flexibility Act, 5 U.S.C. 600 et seq., EPA must prepare a regulatory flexibility analysis assessing the impact of any proposed or final rule on small entities. 5 U.S.C. 603 and 604. Alternatively, EPA may certify that the rule will not have a significant impact on a substantial number of small entities. Small entities include small businesses, small not-for-profit enterprises, and government entities with jurisdiction over populations of less than 50,000.

SIP approvals under section 110 and Subchapter I, Part D of the Clean Air Act do not create any new requirements, but simply approve requirements that the State is already imposing. Therefore, because the federal SIP-approval does not impose any new requirements, I certify that it does not have a significant impact on any small entities affected. Moveover, due to the nature of the federal-state relationship under the Clean Air Act, preparation of a regulatory flexibility analysis would constitute federal inquiry into the economic reasonableness of state action. The Clean Air Act forbids EPA to base its actions concerning SIPs on such grounds. *Union Electric Co.* v. *US EPA*, 427 US 246, 256–66 (S.Ct. 1976); 42 U.S.C. 7410(a)(2).

Under sections 202, 203, and 205 of the Unfunded Mandates Reform Act of 1995 (''Unfunded Mandates Act''), signed into law on March 22, 1995, EPA must undertake various actions in association with proposed or final rules that include a federal mandate that may result in estimated annual costs of $100 million or more to the private sector, or to state, local, or tribal governments in the aggregate.

Through submission of this SIP or plan revision, the state and any affected local or tribal governments have elected to adopt the program provided for under section 187 of the Clean Air Act. These rules may bind state, local and tribal governments to perform certain actions and also require the private sector to perform certain duties. To the extent that the rules being approved by this action will impose any mandate upon the state, local or tribal governments either as the owner or operator of a source or as a regulator, or would impose any mandate upon the private sector, EPA's action will impose no new requirements; such sources are already subject to these regulations under state law. Accordingly, no additional costs to state, local, or tribal governments, or to the private sector, result from this action. EPA has also determined that this final action does not include a mandate that may result in estimated annual costs of $100 million or more to state, local, or tribal governments in the aggregate or to the private sector.

The Office of Management and Budget has exempted this action from review under Executive Order 12866.

Under section 307(b)(1) of the Clean Air Act, petitions for judicial review of this rule must be filed in the United States Court of Appeals for the appropriate circuit within 60 days from date of publication. Filing a petition for reconsideration by the Administrator of this final rule does not affect the finality of this rule for the purposes of judicial review nor does it extend the time within which a petition for judicial review may be filed and shall not postpone the effectiveness of such rule or action. This rule may not be challenged later in proceedings to enforce its requirements. (See section 307(b)(2).)

Submission to Congress and the General Accounting Office

Under section 801(a)(1)(A) of the Administrative Procedure Act (APA) as amended by the Small Business Regulatory Enforcement Fairness Act of 1996, EPA submitted a report containing this rule and other required information to the U.S. Senate, the U.S. House of Representatives and the Comptroller General of the General Accounting Office prior to publication of this rule in today's Federal Register. This rule is not a ''major rule'' as defined by section 804(2) of the APA as amended.

List of Subjects in 40 CFR Part 52

Environmental protection, Air pollution control, Carbon monoxide, Incorporation by reference, Intergovernmental relations, Reporting and recordkeeping requirements.

Dated: May 31, 1996.

William J. Muszynski,

Acting Regional Administrator.

Part 52, chapter I, title 40 of the Code of Federal Regulations is amended as follows:

PART 52—[AMENDED]

1. The authority citation for part 52 continues to read as follows:

Authority: 42 U.S.C. 7401–7671q.

Subpart FF—New Jersey

2. Section 52.1570 is amended by adding new paragraph (c)(54) to read as follows:

§ 52.1570 Identification of plan.

* * * * *

(c) * * *

* * * * *

(54) Revisions to the New Jersey State Implementation Plan (SIP) for carbon monoxide concerning the control of

carbon monoxide from mobile sources, dated November 15, 1992 and November 21, 1994 submitted by the New Jersey State Department of Environmental Protection (NJDEP).

(i) Incorporation by reference.

(A) Chapter 27, Title 7 of the New Jersey Administrative Code Subchapter 18, ''Control and Prohibition of Air Pollution from New or Altered Sources Affecting Ambient Air Quality (Emission Offset Rules),'' effective March 15, 1993.

(ii) Additional material.

(A) November 21, 1994, Technical update to the New Jersey Carbon Monoxide SIP.

3. In § 52.1605 the table is amended by removing the first entry for Title 7, Chapter 27: Subchapter 18 and revising the second entry to read as follows:

§ 52.1605 EPA-approved New Jersey State regulations.

State regulation	State effective date	EPA approved date	Comments
* *	*	*	* *
Title 7, Chapter 27			
* *	*	*	* *
Subchapter 18, ''Control and Prohibition of Air Pollution from New or Altered Sources Affecting Ambient Air Quality (Emission Offset Rules).''.	Mar. 15, 1993	July 25, 1996	See July 25, 1996 for items not included in this limited approval.
* *	*	*	* *

[FR Doc. 96–18642 Filed 7–24–96; 8:45 am]

BILLING CODE 6560–50–P

40 CFR Part 52

[Region II Docket No. 151; SIPTRAX NY12–2–6920, FRL–5524–5]

Approval and Promulgation of Implementation Plans; Revision to the New York State Implementation Plan for Carbon Monoxide; Determination of Length of Control Period for New York-Northern New Jersey-Long Island Consolidated Metropolitan Statistical Area

AGENCY: Environmental Protection Agency.

ACTION: Final rule.

SUMMARY: The Environmental Protection Agency (EPA) is announcing the approval of portions of a request by the State of New York to revise its State Implementation Plan for Carbon Monoxide. EPA is approving New York's carbon monoxide plan which includes a vehicle miles travelled forecast, carbon monoxide emission inventory, multi-state coordination commitment, and Downtown Brooklyn Master Plan. EPA is also approving the State's use of the wintertime gasoline volatility program as a contingency measure. In addition, EPA is partially approving the State's oxygenated fuels rule. EPA will be taking action on New York's attainment demonstration, revised new source review program, conformity rules, and enhanced vehicle inspection and maintenance program in a separate Federal Register action.

These revisions were required by the Clean Air Act as amended in 1990 and will contribute towards attaining the carbon monoxide standard. EPA is also determining that the period prone to high ambient concentrations of carbon monoxide in the New York-Northern New Jersey-Long Island Consolidated Metropolitan Statistical Area extends for the four month period from November 1 through the last day of February. This is the control period for carbon monoxide when State programs in this area must require oxygenated gasoline.

EFFECTIVE DATE: This action is effective August 26, 1996.

ADDRESSES: Copies of New York's submittals are available at the following addresses for inspection during normal business hours:

Environmental Protection Agency, Region II Office, Library, 16th Floor, 290 Broadway, New York, New York 10007–1866.

New York Department of Environmental Conservation, Division of Air Resources, 50 Wolf Road, Albany, New York 12233.

Environmental Protection Agency, Air and Radiation Docket and Information Center (Air Docket 6102), 401 M Street, S.W., Washington, D.C. 20460.

FOR FURTHER INFORMATION CONTACT: Henry Feingersh, Air Programs Branch, Environmental Protection Agency, 290 Broadway, New York, New York 10007–1866, (212) 637–4249.

SUPPLEMENTARY INFORMATION:

Background

The Clean Air Act, as amended in 1990, sets forth in Title I a number of requirements applicable to areas designated as moderate nonattainment for carbon monoxide (CO). Among these is the requirement that by November 15, 1992 the State Implementation Plans (SIP) for such areas be revised to include the following: an attainment demonstration, an enhanced vehicle emission inspection and maintenance (I/M) program, an oxygenated fuels rule, a vehicle miles travelled forecast, contingency measures, a CO emission inventory, a revised new source review program, and a multi-state coordination letter.

EPA has issued a ''General Preamble'' describing its preliminary views on how it intends to review SIPs and SIP revisions submitted in order to meet Title I requirements [see generally 57 FR 13498 (April 16, 1992) and 57 FR 18070 (April 28, 1992)]. The reader should refer to the General Preamble for a more detailed discussion of the Title I requirements and what EPA views as necessary to comply adequately with Title I provisions.

On November 13, 1992, New York submitted to EPA proposed revisions to its CO SIP that addressed each of the aforementioned requirements for its moderate CO nonattainment area. In addition, in a submittal dated March 21, 1994, New York submitted additional information on the subject.

The New York portion of the New York-Northern New Jersey-Long Island CO nonattainment area is classified as a moderate 2 area (an area that has a design value of 12.8–16.4 ppm). This area, which is part of the New York-Northern New Jersey-Long Island Consolidated Metropolitan Statistical Area (CMSA), includes the Counties of Bronx, Kings, New York, Queens,

Richmond, Nassau, and Westchester. The remainder of New York State is in attainment for CO.

EPA proposed approval of most provisions of the State's submission on September 15, 1995 (60 FR 47911). The reader is referred to the proposal for a detailed discussion of EPA's action. Comments were due by October 15, 1995. The State of New York was the only commenter.

In its proposal to approve revisions to the New York SIP for CO, EPA also proposed to determine that the period prone to high ambient concentrations of CO, and thus the control period when oxygenated gasoline is required for the New York-Northern New Jersey-Long Island CMSA, extends from November 1 to the last day of February. Consequently, EPA proposed to approve New York's oxygenated gasoline requirement only for that four month period because anything beyond the control period required by section 211(m) of the Clean Air Act is preempted under 211(c)(4), due to the reformulated gasoline oxygen content requirements applicable in this area.

On February 12, 1996, EPA published (61 FR 5363) a Solicitation of Comment action regarding the proposed determination to set a four month control period for the New York-Northern New Jersey-Long Island CMSA. This action solicited comment on the limited issue of some additional information with regard to emissions modeling and data for the New Jersey portion of the area. The New York Mercantile Exchange was the only commenter on this action.

Public Comment

New York's comments on the New York SIP Federal Register concerned EPA's proposed action on the State's attainment demonstration, I/M program, oxygenated fuels rule, and contingency measures. For a detailed discussion of these comments, the reader is referred to the ''New York Carbon Monoxide State Implementation Plan Technical Support Document (TSD), September 1, 1995 and amended February 28, 1996.'' The comments are summarized as follows:

1. New York urges EPA to grant full approval to the State's CO attainment demonstration because the State has devoted substantial resources to developing it. The principle steps the State used include:

1. Ranking and selection of the ''worst case'' intersections
2. Selection of an air quality model
3. Selection of a background concentration
4. Selection of the temperature to use in the model
5. Modeling
6. Summary of modeling results

These steps are described in more detail in the TSD accompanying this rule. In general, New York's model shows that the area reaches attainment of the CO NAAQS when credit for implementing an enhanced I/M program is considered. However, the State does not, at this time, have a fully adopted and submitted I/M program. Accordingly, contrary to the commenter's suggestion, EPA is precluded from granting a full approval to the attainment demonstration.

EPA is not taking action at this time on the State's attainment demonstration.

2. In its Federal Register action, EPA proposed not to approve section 225–3.8 of New York's gasoline regulation. This section allows the State to grant waivers to the regulation's summertime Reid Vapor Pressure (RVP) limitations. In its comments, New York states that it believes this section should be approved along with the rest of the State's oxygenated gasoline rule, noting that the provision has no bearing on New York's wintertime oxygenated gasoline program.

While EPA agrees that the summertime RVP controls are not a part of the oxygenated gasoline requirements, New York is requesting EPA to approve those RVP controls as part of its federally enforceable SIP. This requires EPA to evaluate whether those provisions are approvable as a revision to New York's SIP. For the reasons stated in its proposed rulemaking, EPA continues to believe that it would be inappropriate to approve the State's waiver provisions for the RVP requirement given that the State controls are otherwise identical to the Federal controls, which the State has no power to waive.

3. New York also commented on the fact that EPA did not propose to approve section 225–3.9(a), which would allow the State to grant waivers of the oxygenated gasoline requirements due to shortages in supply. It believes that the discretion to grant variances should be part of the State's responsibilities for administering the program, and that it would take EPA too long to authorize these types of waivers through the SIP process.

As discussed more fully in the proposal, EPA has identified specific circumstances under which EPA may approve a narrow state variance provision that would allow the State to grant waivers and which would be consistent with the applicable statutory requirements. Since the New York submission does not provide that any increased emissions due to a waiver would subsequently be made up, EPA cannot approve the submitted waiver provision because EPA would have no assurance that such waivers would not violate the requirement of section 110(l) by potentially exempting sources from the requirements of the Clean Air Act.

Absent approval of the waiver provision, EPA would have to evaluate in each individual case whether a waiver would be consistent with the statutory requirements. EPA will attempt to address these issues in a timely fashion. Furthermore, if the State elects to revise its waiver provision to include the necessary assurance that emissions would be made up, EPA would make every effort to revise the SIP quickly to include the waiver provision.

4. New York commented that it believes that, although its employee commute option program (ECO) submittal must meet certain specific requirements as an ozone SIP element, the submittal should be approved as an adequate CO contingency measure at this time.

EPA expects the ECO program to be subject to change by New York State. It is expected that this will then be submitted to EPA as part of the ozone SIP. EPA sees no need to reduce the flexibility available to the State in revising its ECO plan by approving it now as a contingency CO control measure.

EPA received no negative comments on its proposal to determine that the period prone to high ambient concentrations of CO for the New York-Northern New Jersey-Long Island CMSA extends from November 1 through the last day of February, either on the proposed rulemaking for the New York CO SIP or the additional Solicitation of Comment (61 FR 5363). The New York Mercantile Exchange raised concerns on issues outside the scope of this rulemaking, but strongly supported EPA finalizing the proposed determination of the control period. Thus, EPA is hereby determining that the period prone to high ambient concentrations of CO extends from November 1 through the last day of February. EPA is also approving New York's oxygenated fuel requirement for only those four of the seven months provided in New York's submission.

This action of determining that the control period for the New York-Northern New Jersey-Long Island CMSA is the four month period from November through February has the effect of converting EPA's limited approval of the four month portion of New Jersey's oxygenated gasoline SIP submission

into a full approval of that part. The reader is referred to the New Jersey notice (61 FR 5299) for further details.

Elements of the SIP Being Fully Approved

Vehicle Miles Travelled Forecast

The New York SIP is required under section 187(a)(2)(A) of the Clean Air Act to include a forecast of vehicle miles travelled through the year 1995. In addition, annual reports on the accuracy of the forecast and estimates of actual vehicle miles travelled and annual updates of the forecasts are required of the State; the first of these was required by September 30, 1994. EPA finds that New York has submitted documentation satisfying these requirements and, therefore, is approving New York's vehicle miles travelled forecast SIP revision.

Carbon Monoxide Emission Inventory

The New York SIP is required under section 187(a)(1) and as described in section 172(c)(3) of the Clean Air Act to include a comprehensive, actual inventory of all CO emission sources in the nonattainment areas. EPA proposed to approve the CO inventory, and no comments on this proposal were received. For the reasons described more fully in the TSD, EPA is approving New York's 1990 base year emission inventory for CO.

Multi-State Coordination

The New York SIP is required under section 187(e) of the Clean Air Act to include a joint workplan to demonstrate early cooperation and integration of all states in the nonattainment area. This workplan consisted of a letter signed by former Director Thomas M. Allen containing a detailed schedule of milestones and a commitment to coordinate with EPA and each of the states involved. EPA proposed to approve the joint workplan, and no comments on this proposal were received. EPA finds that New York has fulfilled this requirement and approves New York's multi-state coordination commitment.

Contingency Measures

The New York SIP is required under section 187(a)(3) of the Clean Air Act to include adopted contingency measures in the event the State fails to attain the national ambient air quality standards by the required date or if any estimate of vehicle miles travelled contained in an annual report required by section 187(a)(2) exceeds the number predicted in the most recent prior forecast. In a January 1992 guidance document entitled ''Section 187 VMT Forecasting and Tracking Guidance,'' EPA discussed what it considers to be the allowable limit of an exceedance after which contingency measures must take effect without further action by the State or EPA. EPA proposed to approve, as a contingency measure, the State's wintertime gasoline volatility program, and no comments on this proposal were received. Thus, EPA approves, as a contingency measure, the State's wintertime gasoline volatility program as an adequate contingency measure should New York fail to attain the CO standard or exceed the vehicle miles travelled forecast.

Downtown Brooklyn Master Plan

On September 21, 1990, New York submitted a revision to the New York SIP to attain the carbon monoxide air quality standard in the Brooklyn portion of the New York City metropolitan area. EPA is approving this plan as a revision to the SIP.

Elements of the SIP Being Partially Approval

Oxygenated Fuels Rule

The New York SIP is required under section 211(m) of the Clean Air Act to include an oxygenated gasoline program which requires gasoline for the State's specified control areas to contain not less than 2.7 percent oxygen by weight during that portion of the year in which the areas are prone to high ambient concentrations of CO. EPA is approving that part of New York's Subpart 225–3, ''Fuel Composition and Use—Gasoline (oxygenated gasoline program) which meets the requirements of the Clean Air Act and which was part of its November 13, 1992, SIP submittal. As discussed earlier and in its proposed rulemaking, EPA is approving New York's program only for the four months when the area is prone to higher ambient concentrations of CO, which is the control period required by section 211(m) of the Clean Air Act. EPA is also not approving sections 225–3.8 and 225–3.9(a), which deal with State gasoline waiver provisions, as discussed earlier. Although EPA is not approving a portion of the State's regulation, EPA has determined that the approved provisions fully meet the requirements of section 211(m) of the Clean Air Act.

Further Actions

EPA will be taking action on New York's I/M program, attainment demonstration, revised new source review program, and conformity rules in future Federal Register actions. New York is in the process of revising its I/M program. Once this revision is submitted as a SIP revision and approved by EPA, EPA will take action on the I/M program and the attainment demonstration which relies on credit from the I/M program.

Conclusion

EPA is fully approving New York's vehicle miles travelled forecast, CO emission inventory, multi-state coordination commitment, and Downtown Brooklyn Master Plan, as revisions to New York's CO SIP. In addition, the State's wintertime gasoline volatility program is being approved as a contingency measure. EPA is approving portions of New York's Subpart 225–3, ''Fuel Composition and Use—Gasoline,'' regulation as fully meeting the oxygenated fuels requirement of section 211(m) of the Clean Air Act.

This action is issued as required by section 110 of the Clean Air Act, as amended. The Administrator's decision regarding the approval of this plan revision is based on its meeting the requirements of section 110 of the Clean Air Act, and 40 CFR Part 51.

Nothing in this rule should be construed as permitting or allowing or establishing a precedent for any future request for revision to any SIP. Each request for revision to any SIP shall be considered separately in light of specific technical, economic, and environmental factors and in relation to relevant statutory and regulatory requirements.

Under sections 202, 203, and 205 of the Unfunded Mandates Reform Act of 1995 (''Unfunded Mandates Act''), signed into law on March 22, 1995, EPA must undertake various actions in association with proposed or final rules that include a federal mandate that may result in estimated annual costs of $100 million or more to the private sector, or to state, local, or tribal governments in the aggregate.

Through submission of this SIP or plan revision, the State and any affected local or tribal governments have elected to adopt the program provided for under section 187 of the Clean Air Act. These rules may bind state, local and tribal governments to perform certain actions and also require the private sector to perform certain duties. To the extent that the rules being approved by this action will impose any mandate upon the State, local or tribal governments either as the owner or operator of a source or as a regulator, or would impose any mandate upon the private sector, EPA's action will impose no new requirements; such sources are already subject to these regulations under State law. Accordingly, no additional costs to State, local, or tribal governments, or to

the private sector, result from this action. EPA has also determined that this final action does not include a mandate that may result in estimated annual costs of $100 million or more to State, local, or tribal governments in the aggregate or to the private sector.

The Office of Management and Budget has exempted this action from review under Executive Order 12866.

Under section 307(b)(l) of the Clean Air Act, petitions for judicial review of this rule must be filed in the United States Court of Appeals for the appropriate circuit within 60 days from date of publication. Filing a petition for reconsideration by the Administrator of this final rule does not affect the finality of this rule for the purposes of judicial review nor does it extend the time within which a petition for judicial review may be filed and shall not postpone the effectiveness of such rule or action. This rule may not be challenged later in proceedings to enforce its requirements. (See section 307(b)(2)).

Submission to Congress and the General Accounting Office

Under section 801(a)(1)(A) of the Administrative Procedure Act (APA) as amended by the Small Business Regulatory Enforcement Fairness Act of 1996, EPA submitted a report containing this rule and other required information to the U.S. Senate, the U.S. House of Representatives and the Comptroller General of the General Accounting Office prior to publication of this rule in today's Federal Register. This rule is not a ''major rule'' as defined by section 804(2) of the APA as amended.

List of Subjects in 40 CFR Part 52

Environmental protection, Air pollution control, Carbon monoxide, Incorporation by reference, Intergovernmental relations, Reporting and recordkeeping requirements.

Dated: May 31, 1996.

William J. Muszynski,

Acting Regional Administrator.

Part 52, chapter I, title 40 of the Code of Federal Regulations is amended as follows:

PART 52—[AMENDED]

1. The authority citation for part 52 continues to read as follows:

Authority: 42 U.S.C. 7401–7671q.

Subpart HH—New York

2. Section 52.1670 is amended by adding new paragraph (c)(89) to read as follows:

§ 52.1670 Identification of plan.

* * * * *

(c) * * *

* * * * *

(89) Revisions to the New York State Implementation Plan (SIP) for carbon monoxide concerning the control of carbon monoxide from mobile sources, dated November 13, 1992 and March 21, 1994 submitted by the New York State Department of Environmental Conservation (NYSDEC).

(i) Incorporation by reference.

(A) Subpart 225–3 of Title 6 of the New York Code of Rules and Regulations of the State of New York, entitled ''Fuel Composition and Use—Gasoline,'' effective September 2, 1993 (as limited in section 1679).

(ii) Additional material.

(A) March 21, 1994, Update to the New York Carbon Monoxide SIP.

3. Section 52.1679 is amended by removing the existing entry for Subpart 225–3 and adding a new entry for Subpart 225–3 in numerical order to read as follows:

§ 52.1679 EPA—approved New York State regulations.

New York State regulation	State effective date	Latest EPA approval date	Comments
* *		* *	* * *
Subpart 225–3, Fuel Composition and Use— Gasoline.	9/2/93	[*insert date of publication and FR page citation*].	Section 225–3.4 applicable November 1 through last day of February. Variances adopted by the State pursuant to sections 225–3.8 and 225–3.9(a) become applicable only if approved by EPA as SIP revisions.
* *		* *	* * *

[FR Doc. 96–18643 Filed 7–24–96; 8:45 am]

BILLING CODE 6560–50–P

40 CFR Part 52

[WA47–7120a; FRL–5538–3]

Clean Air Act Approval and Promulgation of Carbon Monoxide Implementation Plan for the State of Washington: Puget Sound Attainment Demonstration

AGENCY: Environmental Protection Agency (EPA).

ACTION: Direct final rule.

SUMMARY: EPA is approving the attainment demonstration portion of the Puget Sound carbon monoxide (CO) State implementation plan (SIP) revision submitted on September 30, 1994, by the State of Washington Department of Ecology (Washington) for the purpose of documenting attainment of the national ambient air quality standards (NAAQS) for CO. The implementation plan revision was submitted by the State to satisfy certain federal requirements for an approvable nonattainment area CO SIP for the Puget Sound nonattainment area in the State of Washington. The rationale for the approval is set forth in this notice. Additional information is available at the address indicated below. Under the Clean Air Act (CAA), EPA must approve or disapprove SIPs or portions of SIPs within time frames specified in the CAA; failure to do so would render EPA liable to citizen suits to conduct rulemaking on those SIPs and would delay making approvable rules federally enforceable.

DATES: This action is effective on September 23, 1996 unless adverse or critical comments are received by August 26, 1996. If the effective date is delayed, timely notice will be published in the Federal Register.

ADDRESSES: Written comments should be addressed to: Montel Livingston, SIP Manager, Office of Air Quality (OAQ–107), EPA, 1200 Sixth Avenue, Seattle, Washington 98101.

Documents which are incorporated by reference are available for public inspection at the Air and Radiation Docket and Information Center, Environmental Protection Agency, 401 M Street SW., Washington, D.C. 20460.

Copies of material submitted to EPA may be examined during normal business hours at the following locations: EPA Region 10, Office of Air Quality, 1200 Sixth Avenue (OAQ–107), Seattle, Washington 98101; Washington Department of Ecology, Attention Tami Dahlgren, Olympia, Washington 98504–7600, telephone (360) 407–6830; and the Puget Sound Air Pollution Control Authority, 110 Union Street, Suite 500, Seattle, Washington 98101–2038.

FOR FURTHER INFORMATION CONTACT: William M. Hedgebeth, EPA Region 10, Office of Air Quality, 1200 Sixth Avenue, M/S OAQ–107, Seattle, Washington 98101, (206) 553–7369.

SUPPLEMENTARY INFORMATION:

I. Background

The air quality planning requirements for moderate CO nonattainment areas are set out in sections 186–187 of the CAA Amendments of 1990 (CAAA) which pertain to the classification of CO nonattainment areas and to the submission requirements of the SIPs for these areas, respectively. The EPA has issued a ''General Preamble'' describing EPA's preliminary views on how EPA intends to review SIPs and SIP revisions submitted under Title I of the CAA, [see generally 57 FR 13498 (April 16, 1992) and 57 FR 18070 (April 28, 1992)]. Because EPA is describing its interpretations here only in broad terms, the reader should refer to the General Preamble for a more detailed discussion of the interpretations of Title I advanced in today's proposal and the supporting rationale.

Those States containing CO nonattainment areas with design values greater than (>) 12.7 parts per million (ppm) were required to submit, among other things, an attainment demonstration by November 15, 1992, showing that the plan will provide for attainment by December 31, 1995, for moderate CO nonattainment areas. The Puget Sound area, which includes lands within the Puyallup, Tulalip, and Muckleshoot Indian Reservations, had a design value of 14.8 ppm based on 1987 data, and was classified as ''moderate > 12.7 ppm,'' under the provisions of section 186 of the CAA (*see* 56 FR 56694, November 6, 1991, 40 CFR § 81.348).

The CO NAAQS are for 1-hour and 8-hour periods and are not to be exceeded more than once per year. The 1-hour CO NAAQS is 35 ppm (40 mg/m^3) and the 8-hour CO NAAQS is 9 ppm (10 mg/m^3). Washington's attainment demonstration predicted that the highest 8-hour design concentration as of the attainment date would be 9 ppm, thus demonstrating attainment of the 8-hour CO NAAQS. No demonstration was required to be carried out for the 1-hour NAAQS, as the Puget Sound area has not violated this NAAQS since before the 1990 CAAA were enacted. The same strategies which bring the area into attainment with the 8-hour NAAQS will also contribute to reduced 1-hour concentrations. The modeled attainment demonstration is discussed in greater detail below.

II. Review of State Submittal

Section 110(k) of the CAA sets out provisions governing EPA's review of SIP submittals (*see* 57 FR 13565–66). In this action, EPA is granting approval of the attainment demonstration portion of the plan revision submitted to EPA on September 30, 1994, because it meets all of the applicable requirements of the CAA.

1. Procedural Background

The CAA requires States to observe certain procedural requirements in developing implementation plans and plan revisions for submission to EPA. Section 110(a)(2) of the CAA provides that each implementation plan submitted by a State must be adopted after reasonable notice and public hearing.[1] Section 110(l) of the CAA similarly provides that each revision to an implementation plan submitted by a State under the CAA must be adopted by such State after reasonable notice and public hearing.

The EPA also must determine whether a submittal is complete and therefore warrants further EPA review and action [see section 110(k)(1) and 57 FR 13565]. The EPA's completeness criteria for SIP submittals are set out at 40 CFR Part 51, Appendix V (1991), as amended by 57 FR 42216 (August 26, 1991). The EPA attempts to make completeness determinations within 60 days of receiving a submission. However, a submittal is deemed complete by operation of law if a completeness determination is not made by EPA six months after receipt of the submission. In this instance, a completeness determination was made by operation of law.

The State of Washington Department of Ecology held a public hearing in Bellevue, Washington on September 8, 1994, to entertain public comment on the implementation plan for the Puget Sound CO nonattainment area. Following the public hearing the plan was adopted by the State and submitted to EPA on September 30, 1994, as a proposed revision to the SIP.

With respect to the portions of the tribal lands which lie within the CO nonattainment area, EPA contacted the chairpersons of the Puyallup and Muckleshoot Tribal Councils and the Chairman of the Tulalip Board of Directors of the Tulalip Tribes of Washington to provide them with the information EPA has regarding the CO levels in the ambient air within the entire nonattainment area and to identify the effects that redesignating the entire area as attainment would have on those tribal lands. Mobile sources of CO are the primary sources of concern on the tribal lands within the nonattainment area. No CO ''hot spot'' problems have been identified on the tribal lands by EPA, Washington, or PSAPCA, nor have any stationary CO sources of concern been identified. EPA provided the three tribes the opportunity to discuss any concerns that they had regarding the pending redesignation; no concerns were identified.

In today's action EPA is approving the attainment demonstration portion of Washington's CO SIP submittal for the Puget Sound area and invites public comment on the action. EPA also finds that information and requirements provided in the attainment demonstration portion of the Department of Ecology SIP revision request for the Puget Sound nonattainment area demonstrate that the section 187(a)(7) requirements have been met for the entire Puget Sound area, including portions of the Tulalip, Puyallup, and Muckleshoot Indian Reservations.

2. Attainment Demonstration

As noted, CO moderate nonattainment areas with design values greater than 12.7 parts per million (ppm) were required to submit a demonstration by November 15, 1992, showing that the plan will provide for attainment by December 31, 1995. Washington conducted an attainment demonstration using a ''rollback'' modeling approach for the Puget Sound CO nonattainment area to show that emission reductions resulting from implementation of control measures were sufficient to ''roll back'' the design value to a concentration at or below the NAAQS for CO of 9 ppm.

The CO NAAQS are for 1-hour and 8-hour periods and are not to be exceeded more than once per year. The 8-hour CO NAAQS is 9 ppm (10 mg/m^3). As noted, no demonstration was required to be carried out for the 1-hour NAAQS, as the Puget Sound nonattainment area has

[1] Also Section 172(c)(7) of the Act requires that plan provisions for nonattainment areas meet the applicable provisions of section 110(a)(2).

not violated the 1-hour NAAQS since before the CAAA were enacted. In the attainment demonstration portion of the SIP submittal, Washington showed that the 8-hour design value concentration of 9.0, predicted for 1995, the attainment year, documents attainment of the 8-hour CO NAAQS by the required date, December 31, 1995.

The rollback modelling used in the 1994 SIP submittal incorporated the use of a 90/10 split for emission sources, specifically attributing 90% of the CO emissions to local traffic and 10% of the CO emissions to regional CO sources. Because of questions about whether the use of this split was adequately justified, Washington submitted additional information on May 10, 1996, documenting that the Puget Sound Air Pollution Control Agency (PSAPCA) had conducted additional rollback modelling using a 75/25 split, specifically attributing 75% of the CO emission sources to local traffic and 25% to regional CO sources. This general approach had been approved by EPA in a letter dated October 16, 1992. Conservative assumptions used in the 1994 modelling were: (1) all sources included in the regional emission inventory contribute to ambient concentrations at monitoring sites uniformly (i.e., distant point sources contribute just as much as motor vehicles two blocks away); (2) the attainment demonstration for Tacoma (the site of the highest design value in the nonattainment area) uses 1987 data, when the CAA calls for the most recent two years of data (1988 and 1989) and base year air quality data for all other monitoring sites are from 1988 and 1989; and (3) the rollback analysis is based on 1987, 1988, and 1989 air quality and a 1990 base year for emissions. A fundamental assumption of the rollback approach is that there is a proportional relationship between emissions and air quality during a base year and emissions and air quality in a future year. Use of the same base year for air quality and emissions is the norm.

Changes made by PSAPCA in the additional rollback modelling included the following four factors. First, the additional modeling used the same base year for emissions and air quality in Tacoma. Second, it conservatively assumed that all emissions other than local traffic emissions were the same in 1987 as in 1990, when in all likelihood, these emissions were higher in 1987. Third, the MOBILE5a model was run for 1987 and 1990 and, using the fleet average emission factors for CO from these runs, developed a factor by which to multiply the 1990 mobile source emissions to produce a reasonable approximation of 1987 mobile source emissions. (No adjustment was made for traffic volumes, which may have been lower in 1987). And fourth, as noted, the estimated 1987 mobile source emissions were input into the rollback model using a 75/25 split. Separate design values were calculated for cold and warm weather since both cold and warm weather exceedances had been recorded. The recalculation of the rollback modelling predicted attainment for both cold and warm weather in 1995, with a predicted cold weather design value of 8.6 ppm and a predicted warm weather design value of 8.4 ppm, both in Tacoma, the site of the monitor with the highest recorded CO measurements.

A review of 1995 air quality data entered into the Aerometric Information Retrieval System (AIRS) data base indicated that the actual 1995 design value for the Tacoma CO monitor was 6.3. The 1995 design value for the entire nonattainment area was 6.5, significantly below the modeled 1995 design value of 9.0 using the 90/10 split or the cold and warm weather predicted design values using the 75/25 split in the modeling developed by PSAPCA in 1996.

Major control measures used by Washington during the winter season to effect annual emission reductions were the State's Emission Check Program, the expansion of the Program into new areas, and oxygenated fuel. During the ''warm season,'' there was no oxygenated fuel. The following summarizes the 1990 to 1995 emission inventory reductions.

1990 TO 1995 EMISSION INVENTORY REDUCTIONS

Category	Percent reduction	
	Cold weather	Warm weather
King County:		
On-Road Mobile Sources	36.5	25.6
Total Emission Inventory	27.8	15.9
Pierce County:		
On-Road Mobile Sources	40.0	30.2
Total Emission Inventory	29.7	19.2
Snohomish County:		
On-Road Mobile Sources	37.5	27.0
Total Emission Inventory	28.5	16.7

These are maximum estimates. MOBILE5a was used to develop these figures and assumed a basic inspection and maintenance program rather than Washington's specific program.

3. Enforceability Issues

All measures and other elements in the SIP must be enforceable by the State and EPA (See CAA sections 172(c)(6), 110(a)(2)(A) and 57 FR 13556). The EPA criteria addressing the enforceability of SIP's and SIP revisions were stated in a September 23, 1987, memorandum (with attachments) from J. Craig Potter, Assistant Administrator for Air and Radiation, et al. (see 57 FR 13541). Nonattainment area plan provisions must also contain a program that provides for enforcement of the control measures and other elements in the SIP [see section 110(a)(2)(C)]. There are no specific enforceability issues related to EPA's approval of the Puget Sound CO attainment demonstration. General enforceability issues related to EPA's proposed approval of Washington's redesignation request and maintenance plan for the Puget Sound CO nonattainment area are discussed in the Federal Register, 61 FR 29515, June 11, 1996.

III. Final Action

EPA is approving the attainment demonstration portion of the Puget Sound CO attainment plan because it meets the requirements set forth in section 187(a)(7) of the CAA. EPA is publishing this action without prior proposal because the Agency views this as a noncontroversial amendment and anticipates no adverse comments. However, in a separate document in this Federal Register publication, EPA is proposing to approve the SIP revision should adverse or critical comments be received. This action will be effective September 23, 1996 unless, by August 26, 1996, adverse or critical comments are received. If EPA receives such comments, this action will be withdrawn before the effective date by publishing a subsequent document that will withdraw the final action. All public comments received will then be addressed in a subsequent final rule based on this action serving as a proposed rule. EPA will not institute a second comment period on this action. Any parties interested in commenting on this action should do so at this time. If no such comments are received, the public is advised that this action will be effective on September 23, 1996.

IV. Administrative Review

Under the Regulatory Flexibility Act, 5 U.S.C. 600 et seq., EPA must prepare a regulatory flexibility analysis assessing the impact of any proposed or final rule on small entities. 5 U.S.C.

§§ 603 and 604. Alternatively, EPA may certify that the rule will not have a significant impact on a substantial number of small entities. Small entities include small businesses, small not-for-profit enterprises, and government entities with jurisdiction over populations of less than 50,000.

SIP approvals under section 110 and subchapter I, Part D of the CAA do not create any new requirements, but simply approve requirements that the state is already imposing. Therefore, because the federal SIP-approval does not impose any new requirements, I certify that it does not have a significant impact on any small entities affected. Moreover, due to the nature of the federal-state relationship under the CAA, preparation of a regulatory flexibility analysis would constitute federal inquiry into the economic reasonableness of state action. The CAA forbids EPA to base its actions concerning SIPs on such grounds. *Union Electric Co.* v. *U.S.E.P.A.*, 427 U.S. 246, 256–66 (S.Ct. 1976); 42 U.S.C. 7410(a)(2).

Nothing in this action should be construed as permitting or allowing or establishing a precedent for any future request for revision to any SIP. Each request for revision to any SIP shall be considered separately in light of specific technical, economic, and environmental factors and in relation to relevant statutory and regulatory requirements.

V. Unfunded Mandates

Under Section 202 of the Unfunded Mandates Reform Act of 1995 (''Unfunded Mandates Act''), signed into law on March 22, 1995, EPA must prepare a budgetary impact statement to accompany any proposed or final rule that includes a Federal mandate that may result in estimated costs to State, local, or tribal governments in the aggregate; or to the private sector, of $100 million or more. Under Section 205, EPA must select the most cost-effective and least burdensome alternative that achieves the objectives of the rule and is consistent with statutory requirements. Section 203 requires EPA to establish a plan for informing and advising any small governments that may be significantly or uniquely impacted by the rule.

EPA has determined that the approval action promulgated today does not include a Federal mandate that may result in estimated costs of $100 million or more to either State, local, or tribal governments in the aggregate, or to the private sector. This Federal action approves pre-existing requirements under State or local law, and imposes no new Federal requirements. Accordingly, no additional costs to State, local, or tribal governments, or to the private sector, result from this action.

Under section 801(a)(1)(A) of the Administrative Procedures Act (APA) as amended by the Small Business Regulatory Enforcement Fairness Act of 1996, EPA submitted a report containing this rule and other required information to the U.S. Senate, the U.S. House of Representatives and the Comptroller General of the General Accounting Office prior to publication of the rule in today's Federal Register. This rule is not a ''major rule'' as defined by section 804(2) of the APA as amended.

The Office of Management and Budget has exempted this action from review under Executive Order 12866.

List of Subjects in 40 CFR Part 52

Environmental protection, Air pollution control, Carbon monoxide, Incorporation by reference, Intergovernmental relations, Reporting and recordkeeping requirements.

Note: Incorporation by reference of the Implementation Plan for the State of Washington was approved by the Director of the Office of Federal Register on July 1, 1982.

Dated: July 2, 1996.

Chuck Clarke,

Regional Administrator.

Part 52, chapter I, title 40 of the Code of Federal Regulations is amended as follows: Chapter I, title 40 of the Code of Federal Regulations is amended as follows:

PART 52—[AMENDED]

1. The authority citation for Part 52 continues to read as follows:

Authority: 42 U.S.C. 7401–7671q.

Subpart WW—Washington

2. Section 52.2470 is amended by adding paragraph (c)(62) to read as follows:

§ 52.2470 Identification of plan.

* * * * *

(c) * * *

(62) On September 30, 1994, the Director of WDOE submitted to the Regional Administrator of EPA a revision to the carbon monoxide State Implementation Plan for, among other things, the CO attainment demonstration for the Puget Sound carbon monoxide nonattainment area. This was submitted to satisfy federal requirements under section 187(a)(7) of the Clean Air Act, as amended in 1990, as a revision to the carbon monoxide State Implementation Plan.

(i) Incorporation by reference.

(A) September 30, 1994, letter from WDOE to EPA submitting an attainment demonstration revision for the Puget Sound CO nonattainment area (adopted on September 30, 1994), and a supplement letter and document from WDOE, ''Reexamination of Carbon Monoxide Attainment Demonstration for the Tacoma Carbon Monoxide Monitoring Site for the Supplement to the State Implementation Plan for Washington State, A Plan for Attaining and Maintaining National Ambient Air Quality Standards for Carbon Monoxide in the Puget Sound Nonattainment Area,'' dated May 10, 1996.

[FR Doc. 96–18651 Filed 7–24–96; 8:45 am]

BILLING CODE 6560–50–P

---

40 CFR Part 372

[OPPTS–400062A; FRL–5372–3]

Hydrochloric Acid; Toxic Chemical Release Reporting; Community Right-to-Know

AGENCY: Environmental Protection Agency (EPA).

ACTION: Final rule.

SUMMARY: EPA is modifying the listing for hydrochloric acid on the list of toxic chemicals subject to the reporting requirements under section 313 of the Emergency Planning and Community Right-to-Know Act of 1986 (EPCRA) and section 6607 of the Pollution Prevention Act of 1990 (PPA). Specifically, EPA is deleting non-aerosol forms of hydrochloric acid because the Agency has concluded that the non-aerosol forms of hydrochloric acid meet the section 313(d)(3) deletion criterion. By promulgating this rule, EPA is relieving facilities of their obligation to report releases of and other waste management information on non-aerosol forms of hydrochloric acid that occurred during the 1995 reporting year, and for activities in the future.

DATES: This rule is effective July 25, 1996.

FOR FURTHER INFORMATION CONTACT: Daniel R. Bushman, Acting Petitions Coordinator, 202-260-3882, e-mail: bushman.daniel @epamail.epa.gov, for specific information on this final rule, or for more information on EPCRA section 313, the Emergency Planning and Community Right-to-Know Hotline, Environmental Protection Agency, Mail Code 5101, 401 M St., SW., Washington, DC 20460, Toll free: 1-800-535-0202, in Virginia and Alaska: 703–412-9877, or Toll free TDD: 1-800-553-7672.

SUPPLEMENTARY INFORMATION:

I. Introduction

A. Affected Entities

Entities potentially affected by this action are those which manufacture, process, or otherwise use hydrochloric acid and which are subject to the reporting requirements of section 313 of the Emergency Planning and Community Right-to-Know Act of 1986 (EPCRA), 42 U.S.C. 11023, and section 6607 of the Pollution Prevention Act of 1990 (PPA), 42 U.S.C. 13106. Some of the affected categories and entities include:

Category	Examples of affected entities
Industry	Facilities in the manufacturing sector (Standard Industrial Classification codes 20-39) that manufacture, process or otherwise use hydrochloric acid.
Federal Government	Federal Agencies that manufacture, process, or otherwise use hydrochloric acid.

This table is not intended to be exhaustive, but rather provides a guide for readers regarding entities likely to be affected by this action. This table lists the types of entities that EPA is now aware could potentially be affected by this action. Other types of entities not listed in the table could also be affected. To determine whether your facility is affected by this action, you should carefully examine the applicability criteria in part 372 subpart B of Title 40 of the Code of Federal Regulations.

B. Statutory Authority

This action is taken under sections 313(d) and (e)(1) of EPCRA. EPCRA is also referred to as Title III of the Superfund Amendments and Reauthorization Act of 1986 (SARA) (Pub. L. 99-499).

C. Background

Section 313 of EPCRA requires certain facilities manufacturing, processing, or otherwise using listed toxic chemicals to report their environmental releases of such chemicals annually. Beginning with the 1991 reporting year, such facilities must also report pollution prevention and recycling data for such chemicals, pursuant to section 6607 of PPA. When enacted, section 313 established an initial list of toxic chemicals that was comprised of more than 300 chemicals and 20 chemical categories. Hydrochloric acid was included in the initial list of chemicals and chemical categories. Section 313(d) authorizes EPA to add chemicals to or delete chemicals from the list, and sets forth criteria for these actions. Under section 313(e)(1), any person may petition EPA to add chemicals to or delete chemicals from the list. EPA has added and deleted chemicals from the original statutory list. Pursuant to EPCRA section 313(e)(1), EPA must respond to petitions within 180 days either by initiating a rulemaking or by publishing an explanation of why the petition has been denied.

EPA issued a statement of petition policy and guidance in the Federal Register of February 4, 1987 (52 FR 3479), to provide guidance regarding the recommended content and format for petitions. On May 23, 1991 (56 FR 23703), EPA issued a statement of policy and guidance regarding the recommended content of petitions to delete individual members of the section 313 metal compound categories. EPA has published a statement clarifying its interpretation of the section 313(d)(2) and (3) criteria for adding and deleting chemicals from the section 313 toxic chemical list (59 FR 61439, November 30, 1994) (FRL-4922-2).

II. Description of Petition and Proposed Action

On September 11, 1991, EPA received a petition from BASF Corporation, E.I. duPont de Nemours, Monsanto Company, and Vulcan Materials Company to qualify the listing for hydrochloric acid by requiring release reporting only for hydrochloric acid aerosols and deleting other forms of hydrochloric acid from the list of chemicals under EPCRA section 313. The petitioners maintain that non-aerosol forms of hydrochloric acid do not meet the statutory criteria under EPCRA section 313 for acute, chronic, or environmental effects.

There are precedents for qualified chemical listings under EPCRA section 313. The original list established by Congress contained a number of qualified listings including: aluminum (fume or dust), ammonium nitrate (solution), asbestos (friable), phosphorus (yellow or white), vanadium (fume or dust), and zinc (fume or dust). Also EPA recently modified the sulfuric acid listing (60 FR 34182, June 30, 1995) (FRL–4946–3) by exempting non-aerosol forms of sulfuric acid exactly as is being done in today's action. As with this list modification, EPA found that non-aerosol forms of sulfuric acid do not meet the toxicity criteria of section 313(d)(2). Other qualified listings include those for fibrous aluminum oxide (55 FR 5220, February 14, 1990) and water dissociable nitrate compounds (59 FR 61432, November 30, 1994) (FRL–4922–2).

Following a review of the petition, EPA granted the petition and issued a proposed rule in the Federal Register on November, 15, 1995 (60 FR 57383) (FRL-4045-4), proposing to delete non-aerosol forms of hydrochloric acid from the list of toxic chemicals under EPCRA section 313. EPA's proposal was based on its conclusion that these forms of hydrochloric acid meet the EPCRA section 313(d)(3) criterion for deletion from the list. EPCRA provides at section 313(d)(3) that ''[a] chemical may be deleted if the Administrator determines there is not sufficient evidence to establish any of the criteria described in paragraph [(d)(2)(A)-(C)].'' Specifically, in the proposed rule, EPA preliminarily concluded that there is not sufficient evidence to establish that non-aerosol forms of hydrochloric acid cause adverse acute human health effects at concentration levels that are reasonably likely to exist beyond facility site boundaries, chronic human health effects, or environmental toxicity. This preliminary conclusion, which is detailed in the proposed rule, was based on the Agency's review of the petition, as well as other relevant materials included in the rulemaking record for this action. For the purposes of this final rule, EPA considers the term aerosol to cover any generation of airborne hydrochloric acid (including mists, vapors, gas, or fog) without regard to particle size.

On February 1, 1993 (58 FR 6609), EPA issued a notice announcing that a public hearing would be held to address petitions to modify the listings for both hydrochloric and sulfuric acids (on December 24, 1990, a petition was received from the Environmental Policy Center on behalf of American Cyanamid to modify the listing of sulfuric acid to include only aerosol forms of this chemical). In the February 1, 1993 notice, EPA requested comment on a number of the issues raised by commenters in response to the proposed rule to modify the listing for sulfuric acid (56 FR 34156, July 26, 1991). The Agency believed that these issues were also relevant to hydrochloric acid. Specifically, these issues were: (1) The extent to which EPA should rely on existing regulatory controls under other statutes to support a determination that continuous, or frequently recurring, releases of these acids are unlikely to cause adverse acute human health effects or significant adverse

environmental effects; (2) the sufficiency of the evidence required to determine if the non-aerosol forms of these acids meet the EPCRA section 313(d)(2)(A) and (C) criteria; (3) whether EPA should consider accidental release data in making a finding for environmental effects under EPCRA section 313(d)(2)(C); (4) the relevance of release reporting under other statutory provisions to the issue of whether non-aerosol forms of these acids meet the listing criteria; and (5) other reporting options.

The public meeting was held on March 3, 1993. At this meeting, EPA discussed the specific issues described in the February 1, 1993 notice and presented data on accidental and routine releases of sulfuric and hydrochloric acids. Comments were then presented by the public. One comment presented at the public meeting specific to hydrochloric acid came from the Great Lakes Chemical Company. This commenter stated that hydrochloric acid does not meet either of the listing criteria set forth in EPCRA section 313(d)(2)(A) or (C). The commenter discussed at length the lack of environmental risks posed by deep well injection of hydrochloric acid in oil and gas operations. EPA agrees with the commenter that non-aerosol forms of hydrochloric acid do not meet the EPCRA section 313 listing criteria and therefore none of the environmental releases, including deep well injection, of these non-aerosol forms should be reported under EPCRA section 313.

At the public meeting, EPA received other comments that pertained to both the non-aerosol forms of hydrochloric and sulfuric acid. The major comments received concerned the reporting of accidental releases, effects of the removal of these chemicals on the Right-to-Know program, reliance on other regulatory mechanisms for reporting, and the effects delisting would have on pollution prevention. A brief summary of the major comments received that are relevant to hydrochloric acid and EPA's responses to those comments follow. More detailed responses to the major issues raised by the comments presented and/or submitted at the public meeting can be found in the final rulemaking delisting non-aerosol forms of sulfuric acid (60 FR 34182, June 30, 1995) (FRL–4946–3).

EPA received comments citing concerns for accidental releases of non-aerosol forms of hydrochloric acid and the environmental damages that have resulted. As discussed further in Unit III.B. of this preamble, the Agency believes that the limited number of accidental releases of non-aerosol forms of hydrochloric acid do not result in significant adverse effects of sufficient seriousness to warrant continued listing under EPCRA section 313.

Several commenters stated their opposition to removing non-aerosol forms of hydrochloric acid from reporting under EPCRA section 313 because it defeats the intent of the Right-to-Know program. These commenters contend that removing reporting for non-aerosol forms of hydrochloric acid under EPCRA section 313 will result in a significant information gap regarding ''routine'' releases of the chemical.

EPA agrees that by delisting non-aerosol forms of hydrochloric acid, information on the management of these forms of the chemical may be more difficult to obtain. However, EPA believes that adequate information on non-aerosol forms of hydrochloric acid will still be available through other sources.

EPA received a comment stating that it is inappropriate for the Agency to rely solely on regulations developed under other statutes to determine whether significant adverse human health or environmental effects result from releases that are reported under EPCRA section 313.

While EPA does not rely solely on data as collected under other regulations, the Agency does believe that data collected under other regulations can assist in listing and delisting decisions. In the Agency's review of non-aerosol forms of hydrochloric acid, EPA has not uncovered any information to indicate that non-aerosol forms of this chemical cause significant adverse human health or environmental effects of sufficient seriousness to warrant reporting.

A number of comments received from industry contend that any significant adverse effects that may be caused from releases of non-aerosol forms of hydrochloric acid are already addressed through several other regulations. Additional comments from industry asserted that non-compliance with other statutes must be addressed through the enforcement mechanisms of those statutes and should not be considered in EPCRA section 313 listing or delisting decisions.

EPA agrees with the commenters that non-compliance with other statutes should be addressed through those regulations. However, the Agency has also found that the EPCRA section 313 data are useful in identifying facilities that may not be in compliance with a particular statute.

EPA received comments that stated that the removal of non-aerosol forms of hydrochloric acid will have the effect of removing industry's incentive for conducting pollution prevention efforts for their uses of this chemical which is contrary to the intent of the PPA.

EPA does not agree that this delisting action will undermine pollution prevention efforts. There are numerous other incentives for facilities to reduce their releases of a specific chemical, including financial incentives. In addition, facilities will be able to focus their pollution prevention efforts and report their progress on the forms of hydrochloric acid that pose the greatest hazard, the aerosol forms.

III. Final Rule and Rationale for Delisting

A. Comments on the Proposed Modification to Delete Non-Aerosol Forms of Hydrochloric Acid

EPA received 21 written comments (i.e., in addition to those received at the public meeting) on the proposed deletion of non-aerosol forms of hydrochloric acid from the EPCRA section 313 toxic chemical list, all of which supported the proposed action. All 21 comments were from industry representatives. All commenters supported the listing modification on the grounds that non-aerosol forms do not meet the statutory criteria of section 313(d)(2)(A)-(C). One commenter from the International Dairy Foods Association requested that this listing modification be extended to include non-aerosol forms of phosphoric and nitric acids. Specifically, the commenter ''support[s] an alternative listing option that eliminates the reporting requirement for all transfers to Publicly Owned Treatment Works (POTW) of all non-aerosol forms of mineral acids.''

The commenter refers to an issue raised at the March 3, 1993 public meeting regarding the health and safety of POTW workers that may be jeopardized as a result of transfers of mineral acids to POTWs. The commenter contends that the effluent guidelines, issued under 40 CFR part 403, prohibit an effluent discharge to a POTW with a pH below 5. The commenter continues, ''EPA has stated that a pH between 6 and 9 is neutral, therefore, the only concern is for discharges [within effluent guidelines] between pH 5 and pH 6.'' The commenter compares this range with that of acid rain. The commenter further states that he is ''unaware of any human health hazard associated with direct contact with acid rain, and therefore, continuing to report releases between a pH of 5 and 6 provides no benefit to POTW workers.''

The Agency is currently reviewing the toxicity hazards associated with phosphoric and nitric acid to determine if any modification to the EPCRA section 313 reporting requirements for these acids is appropriate. However, in response to a petition that was withdrawn, EPA has published an analysis of the hazards associated with phosphoric acid (55 FR 25876, June 25, 1990). There are also additional concerns for nitric acid. In addition to exhibiting the characteristic of acidity, nitric acid, when neutralized, exhibits the toxicity of a nitrate compound. On November 30, 1994 (59 FR 61432), EPA added a nitrate compounds category to the EPCRA section 313 list of toxic chemicals based on the toxicity of nitrate. EPA believes that water dissociable nitrate compounds meet the criteria of EPCRA section 313(d)(2)(B).

B. Rationale for Delisting and Conclusions

EPA has concluded that the assessment set out in the proposed rule should be affirmed. Specifically, hydrochloric acid aerosols meet the toxicity criteria of section 313(d)(2), while non-aerosol forms of the acid do not. EPA's decision to delete non-aerosol forms of hydrochloric acid is based on the Agency's evaluation of the toxicity of non-aerosol forms of hydrochloric acid and the levels of hydrochloric acid exposure to which humans and the environment may be subject (Ref. 1). The non-aerosol forms of hydrochloric acid are acutely toxic at low pH; however, there is no information to indicate that non-aerosol forms of hydrochloric acid present a health or environmental risk as a result of continuous, or frequently recurring, releases from facilities.

EPA has concluded that non-aerosol forms of hydrochloric acid do not meet the statutory criterion of section 313(d)(2)(A) regarding acute human health effects; specifically, that the ''chemical is known to cause or can reasonably be anticipated to cause significant adverse acute human health effects at concentration levels that are reasonably likely to exist beyond facility boundaries as a result of continuous, or frequently recurring, releases.'' EPA's review of the toxicity and exposure information indicates that although hydrochloric acid in concentrated forms is acutely toxic, it is unlikely that persons will be exposed to acutely toxic concentration levels beyond facility boundaries as ''a result of continuous, or frequently recurring, releases.''

Rather than being dependent upon average dose over time, e.g., quantity ingested as milligrams/kilogram/day (mg/kg/day), the chronic toxicity hazard of non-aerosol forms of hydrochloric acid is primarily dependent on the pH of the solution which is directly related to the concentration of hydrochloric acid in the solution. Only solutions of high hydrochloric acid concentration (i.e., solutions with a pH of approximately 1 or lower) express this chronic toxicity hazard. The physical and chemical properties of hydrochloric acid (Ref. 2) are such that, in the environment, highly concentrated solutions (i.e., solutions with low pH) are not anticipated to be sustained for any significant period of time, particularly in water. Therefore, concentrations of non-aerosol forms of hydrochloric acid that can express a chronic toxicity hazard are unlikely to exist in the environment, particularly in water. Because the physical and chemical properties of non-aerosol forms of hydrochloric acid limit its existence as highly concentrated solutions in the environment and because only highly concentrated solutions result in a pH low enough to cause chronic toxicity, non-aerosol forms of hydrochloric acid pose a low chronic toxicity hazard to human health. Therefore, EPA has concluded that non-aerosol forms of hydrochloric acid do not meet the chronic toxicity listing criterion in section 313(d)(2)(B), because the chemical in its non-aerosol forms is not known to cause nor can reasonably be anticipated to cause chronic health effects.

As with chronic human health effects, the adverse environmental effects of non-aerosol forms of hydrochloric acid are dependent on the pH of the solution which is directly related to the concentration of hydrochloric acid in the solution. Adverse environmental effects are observed at pH levels below approximately 5.0. Based on the amount of hydrochloric acid required to maintain a pH of 5.0 or less, the non-aerosol forms of hydrochloric acid are considered to pose a moderate hazard to aquatic organisms. Given the regulatory restrictions governing handling and environmental releases of concentrated hydrochloric acid, exposures to pH levels below 5.0 are primarily a result of accidental releases. The data indicate that accidental releases of hydrochloric acid to surface waters are infrequent and isolated occurrences. In only a few circumstances could evidence of adverse environmental effects (e.g., fish kills) be found. Chronic aquatic toxicity is not expected to occur since any pH excursions are expected to dissipate rapidly due to the physical and chemical properties of non-aerosol forms of hydrochloric acid (Ref. 2). Therefore, the environmental listing criterion, 313(d)(2)(C), is not met because the non-aerosol forms of hydrochloric acid are not known to cause nor can they be reasonably anticipated to cause a significant adverse effect on the environment of sufficient seriousness to warrant release reporting.

Although not a factor in the delisting decision, deleting non-aerosol forms of hydrochloric acid from the section 313 list will not result in any significant reduction in the information now available to the public concerning spills of hydrochloric acid. Since reporting of spills under section 313 is only required to be submitted to EPA as part of an overall annual release number, no direct and immediate notice to the public of such an accidental release or spill of hydrochloric acid is available through section 313 reports or through the Toxic Release Inventory (TRI) data base, i.e., only annual release figures are available. In addition, other statutory mechanisms exist by which information on spills of hydrochloric acid will be made available to the public. These mechanisms, which are the same as for sulfuric acid, are detailed in Unit III.A. of the preamble to the Final Rule on sulfuric acid (60 FR 34183).

Therefore, EPA is modifying the listing for hydrochloric acid by deleting non-aerosol forms of hydrochloric acid. For the purposes of this deletion, EPA considers the term aerosol to cover any generation of airborne hydrochloric acid (including mists, vapors, gas, or fog) without regard to particle size. This action to delete non-aerosol forms of hydrochloric acid from the section 313 list is not meant to suggest that the Agency considers hydrochloric acid to be a ''safe'' chemical. Rather, this action reflects the fact that non-aerosol forms of the chemical do not meet the toxicity criteria set forth in EPCRA section 313(d)(2). Nor is today's action intended, or should it be inferred, to affect the status of non-aerosol forms of hydrochloric acid under any other statute or program other than the reporting requirements under EPCRA section 313.

C. Reporting Aerosol Forms of Hydrochloric Acid

For purposes of threshold determination under 40 CFR 372.25, any generation of airborne hydrochloric acid (including mists, vapors, gas, or fog) without regard to particle size, is considered manufacture of hydrochloric acid aerosols. The quantity of airborne hydrochloric acid manufactured, not the amount released, would be compared

with the reporting thresholds in EPCRA section 313(f).

Generation of airborne hydrochloric acid is expected to occur from, but is not limited to: The reaction of alkali metal chlorides (e.g., sodium chloride, potassium chloride) by strong acids (e.g., sulfuric acid); the reaction of alkali metal chlorides with sulfur dioxide in the presence of air and water; the reaction of hydrogen with chlorine; syntheses of organic compounds that require the use of chlorine or chloride-containing substances; combustion of organic chlorides or inorganic chlorides; production or processing of solutions of hydrochloric acid; and volatilization or vaporization of hydrochloric acid from manufacture or processing. EPA will be developing a guidance document to assist facilities in determining whether the facilities are manufacturing, processing or otherwise using aerosol forms of hydrochloric acid as defined under EPCRA section 313.

IV. Effective Date

This action becomes effective July 25, 1996, thus the last year in which facilities had to file a TRI report for non-aerosol forms of hydrochloric acid was 1995, covering releases and other activities that occurred in 1994. Section 313(d)(4) provides that ''[a]ny revision'' to the section 313 list of toxic chemicals shall take effect on a delayed basis. EPA interprets this delayed effective date provision to apply only to actions that add chemicals to the section 313 list. For deletions, EPA may, in its discretion, make such actions immediately effective. An immediate effective date is authorized, in these circumstances, under 5 U.S.C. section 553(d)(1) because a deletion from the section 313 list relieves a regulatory restriction.

EPA believes that where the Agency has determined, as it has with these non-aerosol forms of hydrochloric acid, that a chemical does not satisfy any of the criteria of section 313(d)(2)(A)-(C), no purpose is served by requiring facilities to collect data or file TRI reports for that chemical, or, therefore, by leaving that chemical on the section 313 list for any additional period of time. This construction of section 313(d)(4) is consistent with previous rules deleting chemicals from the section 313 list. For further discussion of the rationale for immediate effective dates for EPCRA section 313 delistings, see 59 FR 33205 (June 28, 1994).

V. Additional Time to Report for 1995

EPA recognizes that today's action has come so close to the extended August 1, 1996, deadline for filing TRI reports for the 1995 reporting year (see 61 FR 2721, January 29, 1996) that facilities that have not yet filed their report for hydrochloric acid may not have sufficient time to reassess their threshold determinations and release estimates based on the new reporting requirements for hydrochloric acid. Therefore, in order to avoid inaccurate and unnecessary reporting and to reduce the reporting burden associated with the filing of revised reports, EPA is allowing an additional two weeks, until August 15, 1996, for facilities to file their TRI reports for hydrochloric acid (acid aerosols). TRI Reports on hydrochloric acid (acid aerosols) for the 1995 reporting year that are filed after August 15, 1996, will be subject to EPA enforcement action, where appropriate. This 2-week extension applies only to TRI reports for hydrochloric acid; reports for all other chemicals subject to the reporting requirements of EPCRA section 313 and PPA section 6607 are still subject to the August 1, 1996 reporting deadline.

Facilities that have already filed a Form R report for hydrochloric acid covering Reporting Year 1995 may wish to either: (1) Revise this report, or (2) submit a withdrawal request if the facility did not exceed the appropriate threshold for the aerosol forms of the chemical, or (3) submit a withdrawal request if the threshold determinations were made on non-aerosol forms of hydrochloric acid only. Revisions and withdrawal requests must be submitted no later than October 15, 1996. Unless EPA receives a revision or withdrawal request by October 15, 1996, EPA will include, in the TRI under the hydrochloric acid (acid aerosols) listing, all hydrochloric acid release and waste management information as reported on each Form R received. This will include any quantities of the non-aerosol forms of hydrochloric acid that where included on a facility's Form R report.

This allowance of additional time for reporting on hydrochloric acid applies only to the EPCRA section 313/PPA section 6607 reporting obligations for TRI reports otherwise due on August 1, 1996, covering calendar year 1995. Nothing in this notice regarding extension of reporting deadlines shall be construed to apply to any other EPCRA reporting obligations, or to any TRI reports due for past or future reporting years. Further, this allowance of additional time for reporting applies only to the federal EPCRA section 313/PPA section 6607 reporting obligation; it does not apply to independent obligations under State laws which also require TRI-type reports. However, EPA encourages the States with similar requirements that relate to federal TRI reporting to embrace this allowance of additional time.

To the extent that this action extending the reporting deadline might be construed as rulemaking subject to section 553 of the Administrative Procedure Act, for the reasons stated above, EPA has determined that notice and an opportunity for public comment are impracticable and unnecessary. Providing for public comment might further delay reporting, and, because there is no substantive change in the reporting obligation, other than allowing an additional 2 weeks, the public will continue to receive the same information, though slightly delayed. Also, public comment would not further inform EPA's decision because the event giving rise to the need to provide extra time for reporting on hydrochloric acid has already occurred. In addition, additional notice and comment procedures in this situation would be contrary to the public interest in timely and accurate reporting of data under EPCRA section 313 and PPA section 6607.

VI. Rulemaking Record

The record supporting this decision is contained in docket control number OPPTS-400062A. All documents, including an index of the docket and the references listed in Unit VI. of this preamble, are available in the TSCA Nonconfidential Information Center (NCIC), also known as, TSCA Public Docket Office from 12 noon to 4 p.m., Monday through Friday, excluding legal holidays. TSCA NCIC is located at EPA Headquarters, Rm. NE-B607, 401 M St., SW., Washington, DC 20460.

VII. References

1. USEPA. 1995. Technical Support Document for the Petition to Delist Non-aerosol Forms of Hydrochloric Acid from EPCRA Section 313.

2. Brady, J.E., Humiston, G.E. General Chemistry Principles and Structure. John Wiley & Sons, New York, (1978), pp. 394-431.

VIII. Regulatory Assessment Requirements

It has been determined that this action is not a ''significant regulatory action'' within the meaning of Executive Order 12866 (58 FR 51735, October 4, 1993), because this action eliminates an existing regulatory requirement. The Agency estimates the cost savings to industry from this action to be between $4.9 and $7.6 million per year. The cost savings to EPA is estimated at $135,000 to $201,000 per year. The lower bound estimate of the total annual savings for

industry and EPA from this action is $5,035,000 and the upper bound estimate is $7,801,000.

This action does not impose any Federal mandate on State, local or tribal governments or the private sector within the meaning of the Unfunded Mandates Reform Act of 1995 (Pub. L. 104-4). And, given its deregulatory nature, I hereby certify pursuant to the Regulatory Flexibility Act (5 U.S.C. 605(b)), that this action does not have a significant economic impact on a substantial number of small entities. As required, information to this effect has been forwarded to the Small Business Administration.

This action does not have any information collection requirements subject to the provisions of the Paperwork Reduction Act of 1980, 44 U.S.C. 3501 et seq. The elimination of the information collection components for this action is expected to result in the elimination of 92,000 to 141,000 paperwork burden hours.

In addition, pursuant to Executive Order 12898 (59 FR 7629, February 16, 1994), entitled ''Federal Actions to Address Environmental Justice in Minority Populations and Low-Income Populations,'' the Agency has determined that there are no environmental justice related issues with regard to this action since this final rule simply eliminates reporting requirements for a chemical that, under the criteria of EPCRA section 313, does not pose a concern for human health or the environment.

Under 5 U.S.C. 801(a)(1)(A) of the Administrative Procedure Act (APA) as amended by the Small Business Regulatory Enforcement Fairness Act of 1996 (Title II of Pub. L. 104-121, 110 Stat. 847), EPA submitted a report containing this rule and other required information to the U.S. Senate, the U.S. House of Representatives and the Comptroller General of the General Accounting Office prior to publication of the rule in today's Federal Register. This rule is not a ''major rule'' as defined by 5 U.S.C. 804(2) of the APA as amended.

List of Subjects in 40 CFR Part 372

Environmental protection, Community right-to-know, Reporting and recordkeeping requirements, Toxic chemicals.

Dated: July 19, 1996.

Lynn R. Goldman,

Assistant Administrator, Office of Prevention, Pesticides and Toxic Substances.

Therefore, 40 CFR part 372 is amended as follows:

1. The authority citation for part 372 continues to read as follows:

Authority: 42 U.S.C. 11023 and 11048.

§ 372.65 [Amended]

2. Sections 372.65(a) and (b) are amended by adding the parenthetical to the entry for hydrochloric acid to read ''Hydrochloric acid (acid aerosols including mists, vapors, gas, fog, and other airborne forms of any particle size)'' under paragraph (a) and for CAS number entry 7647-01-0 under paragraph (b).

[FR Doc. 96–18944 Filed 7–24–96; 8:45 am]

BILLING CODE 6560–50–F

FEDERAL COMMUNICATIONS COMMISSION

47 CFR Parts 20 and 52

[CC Docket No. 95–116; FCC 96–286]

Telephone Number Portability

AGENCY: Federal Communications Commission.

ACTION: Final rule.

SUMMARY: On June 13, 1995, The Commission adopted a notice of proposed rulemaking (CC Docket No. 95–116) regarding telephone number portability . The First Report and Order released July 2, 1996, promulgates rules and regulations implementing the statutory requirement that local exchange carriers (LECs) provide number portability as set forth in section 251 of the Telecommunications Act of 1996 (1996 Act). The Report and Order mandates the implementation of number portability by LECs, consistent with the procompetitive goals of the Telecommunications Act of 1996. Concurrently with the adoption of the Report and Order, the Commission adopted a Further Notice of Proposed Rulemaking which is published elsewhere in this issue.

EFFECTIVE DATE: August 26, 1996.

FOR FURTHER INFORMATION CONTACT: Jason Karp, Attorney, Common Carrier Bureau, Policy and Program Planning Division, (202) 418–1517, or Mindy Littell, Attorney, Common Carrier Bureau, Policy and Program Planning Division, (202) 418–1394. For additional information concerning the information collections contained in this Report and Order contact Dorothy Conway at 202–418–0217, or via the Internet at dconway@fcc.gov.

SUPPLEMENTARY INFORMATION: This is a summary of the Commission's First Report and Order adopted June 27, 1996, and released July 2, 1996. The full text of this First Report and Order is available for inspection and copying during normal business hours in the FCC Reference Center (Room 239), 1919 M St., NW., Washington, DC. The complete text also may be obtained through the World Wide Web, at http://www.fcc.gov/Bureaus/Common Carrier/Orders/fcc96286.wp, or may be purchased from the Commission's copy contractor, International Transcription Service, Inc., (202) 857–3800, 2100 M St., NW., Suite 140, Washington, DC 20037. Pursuant to Section 251, the Report and Order establishes performance criteria for acceptable long-term number portability methods and requires all LECs to begin deploying number portability in the 100 largest Metropolitan Statistical Areas (MSAs) no later than October 1, 1997, and to complete deployment in those MSAs by December 31, 1998, in accordance with a phased schedule. Number portability must be provided in these areas by all LECs to all telecommunications carriers, including commercial mobile radio services (CMRS) providers. In addition, pursuant to the Commission's independent authority under sections 1, 2, 4(i) and 332 of the Communications Act of 1934, as amended, the Report and Order requires all cellular, broadband personal communications services (PCS) and covered Specialized Mobile Radio (SMR) service providers to be able to deliver calls from their networks to ported numbers anywhere in the country by December 31, 1998, and requires cellular, broadband PCS and covered SMR customers to be able to move their own numbers to other carriers by June 30, 1999. In the Report and Order, the Commission delegates responsibility to the North American Numbering Council (NANC) to oversee the initial administration of the system of regional databases which will be used by carriers to provide number portability. Pursuant to the 1996 Act, the Commission also requires LECs to provide currently available number portability measures upon specific request from another carrier until long-term number portability is available. However, the Report and Order concludes that CMRS providers need not provide such measures due to technical considerations specific to the CMRS industry. In addition, consistent with section 251(e)(2) of the Telecommunications Act of 1996, the Report and Order sets forth principles that ensure that the costs of currently available measures are borne by all telecommunications carriers on a competitively neutral basis, and permits states to utilize various cost recovery mechanisms, so long as they are

consistent with these statutory requirements.

Regulatory Flexibility Analysis:

As required by the Regulatory Flexibility Act, the Report and Order contains a Final Regulatory Flexibility Analysis which is set forth in Appendix C to the Report and Order. A brief description of the analysis follows.

The rules adopted in this Report and Order are necessary to implement the provisions of the Telecommunications Act of 1996 requiring LECs to offer number portability, if technically feasible.

Although there were no comments submitted in response to the Initial Regulatory Flexibility Analysis set forth in the Notice of Proposed Rulemaking, the general comments of Chief Counsel for Advocacy of the United States Small Business Administration (SBA) generally supported the actions of the Commission in the Report and Order. However, in their general comments filed prior to the passage of the 1996 Act, some LECs suggested that the Commission should neither adopt, nor direct the adoption of, number portability without performing a thorough cost/benefit analysis—a course of action which may result in less of an impact on small entities. However, after passage of the 1996 Act, most parties agreed that the 1996 Act clearly directs the Commission to implement long-term number portability.

The statutory meaning of the term ''small business'' is one which (1) is independently owned and operated; (2) is not dominant in its field of operation; and (3) satisfies any additional criteria established by the Small Business Administration (SBA). According to SBA's regulations, entities engaged in the provision of telephone service may have a maximum of 1,500 employees in order to qualify as a small business concern. 13 CFR 121.201. This standard also applies in determining whether an entity is a small business for purposes of the Regulatory Flexibility Act.

The rules adopted by the Commission governing long-term number portability apply to all LECs, including incumbent LECs as well as new LEC entrants, and also apply to cellular, broadband PCS, and covered SMR providers. According to the SBA definition, incumbent LECs do not qualify as small businesses because they are dominant in their field of operation. However, the rules may have a significant economic impact on a substantial number of small businesses insofar as they apply to telecommunications carriers other than incumbent LECs, such as new entrant LECs, as well as cellular, broadband PCS, and covered SMR providers. Based upon data contained in the most recent census and a report by the Commission's Common Carrier Bureau, the Commission estimated that 2,100 carriers could be affected. This estimate was derived based on an analysis using census data on the number of firms with fewer than 1,000 employees and subtracting the number of incumbent LECs (as established by an FCC report). For a detailed analysis, see Appendix C of the Report and Order.

There are several reporting requirements imposed by the Report and Order which will likely require the services of persons with technical expertise to prepare the reports. First, carriers participating in a field test in the Chicago, Illinois, area are required to file with the Commission a report of their findings within 30 days after completion of the test. Second, after December 31, 1998, long-term number portability must be provided by LECs outside of the 100 largest MSAs within six months after a specific request by another telecommunications carrier in which the requesting carrier is operating or plans to operate. The specific request must contain certain information. Third, state regulatory commissions must file with the Commission a notification if they opt to develop a state-specific database in lieu of participating in a regional database system. Carriers that object to a state decision to opt out of the regional database system may file with the Commission a petition for relief. Fourth, the item requires any administrator selected by a state prior to the release of the Report and Order, that wishes to bid for administration of one of the regional databases, must submit a new proposal in accordance with the guidelines established by the NANC. Fifth, the Report and Order requires carriers that are unable to meet the deadlines for implementing a long-term number portability solution to file with the Commission at least 60 days in advance of the deadline a petition to extend the time by which implementation in its network will be completed. Finally, we require an industry body known as the Industry Numbering Committee (INC) to file a report with the Commission on the portability of non-geographic numbers assigned to LECs within 12 months after the effective date of the Report and Order.

The Commission's actions in this Report and Order will benefit small entities by facilitating their entry into the local exchange market. The record in this proceeding indicates that the lack of number portability would deter entry by competitive providers of local service because of the value customers place on retaining their telephone numbers. These competitive providers, many of which may be small entities, may find it easier to enter the market as a result of number portability which will eliminate this barrier to entry.

In general, the Commission has attempted to keep burdens on local exchange carriers to a minimum. For example, the phased deployment schedule requires long-term number portability to be implemented initially in the 100 largest MSAs, and then elsewhere upon a carrier's request. The provision of currently available measures is conditioned upon request only. In addition, the Commission has attempted to minimize the impact of our rules upon cellular, broadband PCS, and covered SMR providers, which may be small businesses, by not requiring such carriers to offer currently available number portability measures. Similarly, paging and messaging service providers, which may be small entities, are required to provide neither currently available measures nor long-term number portability under our rules. The regulatory burdens imposed are necessary to ensure that the public receives the benefit of the expeditious provision of service provider number portability in accordance with the statutory requirements.

Paperwork Reduction Act

Public reporting burden for the collections of information is estimated as follows:

Information collections	Estimated avg. hours per response	Estimated number of respondents (all are one-time only responses)
Field test report	20 hours per respondent (joint response).	11

Information collections	Estimated avg. hours per response	Estimated number of respondents (all are one-time only responses)
Requests for long-term number portability in areas outside the 100 largest MSAs	3 hours	80
State notification of intention to ''opt out'' of regional database system	3 hours	5
Carrier petitions challenging state decision to ''opt out'' of regional database system	10 hours	2
Proposal to administer database(s)	160 hours	1
Petitions to extend implementation deadline	10 hours	8

Total Annual Burden: 735 hours.

Frequency of Response: All collections of information require one-time only responses.

These estimates include the time for reviewing instructions, searching existing data sources, gathering and maintaining the data needed, and completing and reviewing the collections of information. Send comments regarding these burden estimates or any other aspects of the collections of information, including suggestions for reducing the burden, to the Federal Communications Commission, Records Management Branch, Room 234, Paperwork Reduction Project, Washington, DC 20554 and to the Office of Management and Budget, Paperwork Reduction Project, Washington, DC 20503.

Synopsis of First Report and Order

I. Introduction

1. We initiated this proceeding on July 13, 1995, when we adopted a Notice of Proposed Rulemaking seeking comment on a wide variety of policy and technical issues related to telephone number portability (60 FR 39136 (August 1, 1995)). Since our adoption of the NPRM, the Telecommunications Act of 1996 became law. Section 251, added by the 1996 Act, requires all local exchange carriers (LECs), both incumbents and new entrants, to offer number portability in accordance with requirements prescribed by the Commission. On March 14, 1996, the Common Carrier Bureau released a Public Notice seeking comment on how the passage of the 1996 Act may have affected the issues raised in the NPRM (61 FR 11174 (March 19, 1996)). Comments in response to the Public Notice were received on March 29, 1996, and reply comments were filed on April 5, 1996. In addition, efforts to implement number portability at the state level have progressed since adoption of the NPRM.

2. The Telecommunications Act of 1996 establishes ''a pro-competitive, de-regulatory national policy framework'' that is intended to ''promote competition and reduce regulation * * * to secure lower prices and higher quality services for American telecommunications consumers and encourage the rapid deployment of new telecommunications technologies.'' The statute imposes obligations and responsibilities on telecommunications carriers, particularly incumbent local exchange carriers, that are designed to open monopoly telecommunications markets to competitive entry and to promote competition in markets that already are open to new competitors. In particular, section 251(b) imposes specific obligations on all local exchange carriers to open their networks to competitors. The Act envisions that removing legal and regulatory barriers to entry and reducing economic impediments to entry will enable competitors to enter markets freely, encourage technological development, and ensure that a firm's prowess in satisfying consumer demand will determine its success or failure in the marketplace. In implementing the statute, the Commission has the responsibility to adopt the rules that will implement most quickly and effectively the national telecommunications policy embodied in the 1996 Act. Number portability is one of the obligations that Congress imposed on all local exchange carriers, both incumbents and new entrants, in order to promote the pro-competitive, deregulatory markets it envisioned. Congress has recognized that number portability will lower barriers to entry and promote competition in the local exchange marketplace. In its report, the Senate Committee on Commerce, Science, and Transportation concluded that the ''minimum requirements [for interconnection set forth in new section 251(b), including number portability,] are necessary for opening the local exchange market to competition.'' Likewise, the House of Representatives Committee on Commerce determined that ''the ability to change service providers is only meaningful if a customer can retain his or her local telephone number.''

3. In this Order, we promulgate rules and regulations implementing this congressional directive. Although we decline to choose a particular technology for providing number portability, we establish in this Report and Order performance criteria that any long-term number portability method selected by a LEC must meet. Pursuant to the statutory requirement in section 251 to provide number portability, we require all LECs to begin to implement a long-term service provider portability solution that meets our performance criteria in the 100 largest Metropolitan Statistical Areas (MSAs) no later than October 1, 1997, and to complete deployment in those MSAs by December 31, 1998, in accordance with a phased schedule set forth below. Number portability must be provided in these areas by all LECs to all telecommunications carriers, including commercial mobile radio services (CMRS) providers.

4. The statute explicitly excludes CMRS providers from the definition of local exchange carriers, and therefore from the section 251(b) obligations to provide number portability, unless the Commission concludes that they should be included in the definition of local exchange carrier. Our recent Notice of Proposed Rulemaking on interconnection issues raised by the 1996 Act sought comment generally on whether, and to what extent, CMRS providers should be classified as LECs. Because we conclude that we have independent authority under sections 1, 2, 4(i), and 332 of the Communications Act of 1934, as amended, to require cellular providers, broadband personal communications services (PCS), and covered Specialized Mobile Radio (SMR) providers to provide long-term service provider portability, we need not decide here whether CMRS providers must provide number portability as local exchange carriers under section 251(b). We require all cellular, broadband PCS, and covered SMR providers to have the capability of delivering calls from their networks to

ported numbers anywhere in the country by December 31, 1998, and to offer service provider portability, including the ability to support roaming, throughout their networks by June 30, 1999.

5. We conclude that a system of regional databases that are managed by an independent administrator will serve the public interest. We direct the North American Numbering Council (NANC) to provide initial oversight of this regional database system. We direct the NANC to determine the number and location of the regional databases and to select one or more administrators responsible for deploying the database system. Any state that prefers to develop its own statewide database rather than participate in a regionally-deployed database, however, may opt out of its designated regional database and implement a state-specific database. We will retain authority to override a state's decision to develop a statewide database if an affected carrier can demonstrate that the state's proposal would significantly delay deployment of a long-term method or impose unreasonable costs on affected carriers.

6. Until long-term service provider portability is available, we require LECs to provide currently available number portability measures, such as Remote Call Forwarding (RCF) and Direct Inward Dialing (DID), upon specific request from another carrier. We conclude, however, that commercial mobile radio service providers need not provide such measures due to technical considerations specific to the CMRS industry. We enunciate principles that ensure that the costs of currently available measures are borne by all telecommunications carriers on a competitively neutral basis, and we conclude that states may utilize various cost recovery mechanisms, so long as they are consistent with these statutory requirements. We decline at this time to require the provision of either service or location portability. We conclude that, while the statute requires LECs to implement 500 and 900 number portability, there is insufficient record evidence to determine whether LEC provision of portability for 500 and 900 numbers is technically feasible. As a result, we refer the issue to the Industry Numbering Committee (INC), which must report its findings to the Commission within 12 months of the effective date of this Order. Finally, we adopt a Further Notice of Proposed Rulemaking regarding cost recovery for long-term number portability.

II. Background

A. Telecommunications Act of 1996

7. New section 251(b)(2) of the Communications Act of 1934, as added by the 1996 Act, directs each local exchange carrier ''to provide, to the extent technically feasible, number portability in accordance with requirements prescribed by the Commission.'' The 1996 Act defines the term ''local exchange carrier'' as:

> any person that is engaged in the provision of telephone exchange service or exchange access. Such term does not include a [commercial mobile service provider,] as defined under section 332(c), except to the extent that the Commission finds that such provider should be included in the definition of such term.

The 1996 Act defines ''number portability'' as ''the ability of users of telecommunications services to retain, at the same location, existing telecommunications numbers without impairment of quality, reliability, or convenience when switching from one telecommunications carrier to another.''

8. The 1996 Act defines the term ''telecommunications carrier'' as ''any provider of telecommunications services, except that such term does not include aggregators of telecommunications services (as defined in section 226).'' The term ''telecommunications service'' is defined by the 1996 Act as ''the offering of telecommunications for a fee directly to the public, or to such classes of users as to be effectively available directly to the public, regardless of the facilities used.'' Because the 1996 Act's definition of number portability requires LECs to provide number portability when customers switch from any telecommunications carrier to any other, the statutory obligation of LECs to provide number portability runs to other telecommunications carriers. Because CMRS falls within the statutory definition of telecommunications service, CMRS carriers are telecommunications carriers under the 1996 Act. As a result, LECs are obligated under the statute to provide number portability to customers seeking to switch to CMRS carriers.

9. In addition to the duties imposed by section 251(b) on all LECs, section 251(c)(1) imposes upon incumbent LECs, *inter alia*, the ''duty to negotiate in good faith * * * the terms and conditions of agreements to fulfill'' the section 251(b) obligations, including the duty to provide number portability. An incumbent LEC is defined as a carrier that was providing exchange access service in a particular area on February 8, 1996, and was a member of the National Exchange Carrier Association (NECA) pursuant to § 69.601(b) of the Commission's regulations. The 1996 Act creates an exemption from the obligations of section 251(c) for rural telephone companies, and allows LECs with fewer than two percent of the nation's subscriber lines to petition a state commission for suspension or modification of the application of sections 251(b) and (c).

10. Section 251(e)(1) reinforces the Commission's authority over matters relating to the administration of numbering resources by giving the Commission exclusive jurisdiction over those portions of the North American Numbering Plan (NANP) that pertain to the United States. This subsection also requires the Commission to ''create or designate one or more impartial entities to administer telecommunications numbering and to make such numbers available on an equitable basis.'' Moreover, section 251(e)(2) provides that the cost of ''number portability shall be borne by all telecommunications carriers on a competitively neutral basis as determined by the Commission.''

11. Finally, new section 271(c)(2)(B) establishes a ''competitive checklist'' of requirements that the Bell Operating Companies (BOCs) must meet to provide in-region interLATA services. One of the requirements that the BOCs must satisfy is the provision of ''interim number portability through remote call forwarding, direct inward dialing trunks, or other comparable arrangements, with as little impairment of functioning, quality, reliability, and convenience as possible'' until the Commission issues regulations pursuant to section 251 to implement the statute's number portability requirements. Section 271(c)(2)(B)(xi) directs the BOCs to comply fully with the regulations implemented by the Commission.

B. Proposed Number Portability Methods

12. Because most telephone numbers within the NANP are associated with a particular switch operated by a particular service provider, they currently cannot be transferred outside the service area of a particular switch or between switches operated by different service providers without technical changes to the switch or network. Several methods exist, or are being developed, to provide telephone number portability. These methods generally consist of two types: database and non-database methods.

1. Database Methods

13. Several industry participants have proposed methods for providing service provider portability that use databases containing the customer routing information necessary to route telephone calls to the proper terminating locations. All these methods depend on Intelligent Network (IN) or Advanced Intelligent Network (AIN) capabilities. Before the release of our NPRM, AT&T proposed a Location Routing Number (LRN) method to the Industry Numbering Committee (INC), an industry body that provides an open forum to address and resolve industry-wide issues associated with the non-policy-related planning, administration, allocation, assignment, and use of numbering resources within the NANP area. Since it proposed LRN to the INC, AT&T has continued to develop and refine this method. Essentially, LRN assigns a unique 10-digit telephone number to each switch in a defined geographic area. The location routing number serves as a network address. Carriers routing telephone calls to customers that have transferred their telephone numbers from one carrier to another perform a database query to obtain the location routing number that corresponds to the dialed telephone number. The database query is performed for all calls to switches from which at least one number has been ported. The carrier then would route the call to the new carrier based on the location routing number.

14. MCI, DSC Communications, Nortel, Tandem Computers, and Siemens Stromberg-Carlson have developed a method referred to as the Carrier Portability Code (CPC) method. This method operates in a similar manner to LRN. Under CPC, however, the database associates the dialed telephone number with a 3-digit carrier portability code identifying the particular carrier to whom the dialed number has been transferred, rather than a particular switch. As described below, many of the parties in this proceeding and staff of some state commissions consider the CPC method to be an interim database solution.

15. Stratus Computer and US Intelco have developed another database method commonly referred to as Local Area Number Portability (LANP). This method uses two ''domains'' of 10-digit numbers to route telephone calls to customers that have transferred their numbers to new carriers or new geographic locations. Specifically, LANP assigns a ten-digit customer number address (CNA) to each end user; this is the number that callers would dial to place telephone calls to the particular end user. It also assigns each customer a 10-digit network node address (NNA) that identifies where in the telephone network to reach the particular end user. Both the CNA and the NNA are stored in routing databases so that carriers can determine from the dialed telephone number where in the network to reach the called party.

16. GTE has proposed both on the record in this proceeding and before the INC what it refers to as the Non-Geographic Number (NGN) method. While this method uses a database, it operates in a fundamentally different manner from CPC, LRN, and LANP. The NGN method would provide service provider and location portability to end users by assigning them non-geographic telephone numbers, such as an INPA (interchangeable numbering plan area) code that has been assigned for non-geographic numbers. Telephone calls to such end users would be routed in much the same way as toll free calls are today, by performing a database query to determine the geographic telephone number corresponding to the dialed non-geographic telephone number, and routing the call to the appropriate geographic number.

17. Pacific Bell has proposed a triggering mechanism which operates in conjunction with the same addressing scheme utilized in AT&T's LRN method. This mechanism, called Query on Release (QOR) or Look Ahead, determines under what circumstances a database query is performed. Under QOR, the signalling used to set up a telephone call is routed to the end office switch to which the dialed telephone number was originally assigned (the release switch), i.e., according to the NPA–NXX of the dialed number. If the dialed number has been transferred to another carrier's switch, the previous switch in the call path queries the database to obtain the routing information. The call is then completed to the new carrier's switch.

18. Another number portability method triggering mechanism that is similar to QOR is Release-to-Pivot (RTP). RTP differs from QOR in that when a number has been ported from the release switch, the release switch—rather than the previous switch in the call path—returns the address information necessary for routing the call. The information regarding where to route the telephone call, if the number has been transferred, may be contained either in the release switch or an external database.

2. Non-Database Methods

19. In our NPRM, we discussed two currently available methods of providing service provider portability that do not use databases: Remote Call Forwarding and Flexible Direct Inward Dialing. These methods are commonly referred to as ''interim measures.'' While most LECs currently are able to port numbers to other service providers using these methods, they suffer from certain limitations that make them unsuitable for long-term number portability. RCF redirects calls to telephone numbers that have been transferred by essentially placing a second telephone call to the new network location. DID routes the second call over a dedicated facility to the new service provider's switch, instead of translating the dialed number to a new number.

20. In the NPRM, we also discussed three derivative methods of RCF and DID (enhanced remote call forwarding, route index/portability hub, and hub routing with AIN), all of which require routing incoming calls to the terminating switch identified by the NPA–NXX code of the dialed phone number. Unlike RCF and DID, they use LEC tandem switches to aggregate calls to a particular competing service provider before those calls are routed to that provider. In addition, LECs in several states reportedly are providing Directory Number Route Indexing (DNRI), which first routes incoming calls to the switch to which the NPA–NXX code was originally assigned, then routes ported calls to the new service provider either through a direct trunk or by attaching a pseudo NPA to the number and using a tandem, depending on availability.

C. Current State Efforts

1. State Task Forces and Implementation

21. Parties to this proceeding report that several states have established task forces of industry participants or are otherwise beginning to investigate the development and implementation of long-term number portability methods. Those states include: Alabama, Arizona, California, Colorado, Connecticut, Florida, Georgia, Illinois, Indiana, Kansas, Maryland, Michigan, Minnesota, New York, Ohio, Oregon, Texas, Utah, Virginia, Washington, Wisconsin, and Wyoming. Of these states, the task forces in Colorado, Florida, Georgia, Illinois, Maryland, and New York have all selected AT&T's Location Routing Number method for implementing service provider number portability in areas within their states'

boundaries. In addition, the state commissions of Colorado, Georgia, Illinois, Maryland, New York, and Ohio have adopted the recommendation of their staff and task forces to implement LRN. Parties to this proceeding assert, moreover, that state task forces or commissions in other states, such as Indiana, Michigan, and Wisconsin, as well as in Canada, are utilizing the results of the Illinois task force's efforts in the area of number portability.

22. Several states have set implementation schedules for the portability methods they have selected. Switch vendors have committed to make available LRN software to carriers in Illinois in the second quarter of 1997. Colorado, Illinois, and Georgia plan to begin deploying LRN in mid-1997. New York also expects LRN to be generally available for installation in that state in mid-1997, though deployment in certain AT&T switches is expected to begin earlier. Maryland plans to begin implementing LRN by no later than the third quarter of 1997. According to NARUC, Colorado similarly expects LRN availability in the second quarter of 1997 (but plans to monitor switch vendor progress and reevaluate this time frame in the third quarter of 1996). Ohio will use a LRN number portability workshop, to be established within 120 days of the issuance of its June 12, 1996 Order, to establish the time frame and manner of the implementation of LRN in Ohio. Michigan has ordered that implementation of long-term number portability in Michigan start at the same time that implementation begins in Illinois. The Illinois and Maryland task forces are examining various implementation issues, including a deployment schedule, cost recovery, billing and rating, and service management system (SMS) administration. The Illinois task force selected an SMS provider in April 1996. The Maryland and Colorado task forces have been planning to release their requests for proposals for their SMS administrators in the second quarter of 1996.

2. State Trials

23. Two states have conducted or are conducting number portability trials. As we described in the NPRM, ten companies, working with the New York Department of Public Service (NY DPS), jointly initiated two number portability trials, one in Rochester and another in Manhattan. The companies originally planned to test the LANP method of Stratus Computers and US Intelco in Rochester, but that trial was canceled. The Manhattan trial, testing the CPC method, began in early February of this year. The New York DPS, however, now considers CPC to be, at best, an interim method and has changed the trial's emphasis from the technical aspects of the method to the operational and administrative aspects of the intercompany procedures that are required to change a customer from one local exchange provider to another. MCI, one of the original proponents of CPC, no longer views CPC as a viable long-term method.

24. A group of telecommunications service providers conducted a technical trial of the LANP method in Seattle, Washington, during 1995. That trial ended in December 1995. The objective of the technical trial was to identify the technical, operational, and administrative issues that arise when a telephone number is not associated with a specific geographic location. Because the trial revealed certain technical and operational difficulties with the LANP technology, the Washington task force on number portability declined to adopt LANP. The Washington Utilities and Transportation Commission has not adopted LANP, and the companies involved in the trial have ceased advocating LANP.

3. State Interim Measures

25. Carriers are providing interim portability measures in a number of states, either voluntarily or pursuant to state commission orders. According to NARUC and other parties to the proceeding, LECs are providing RCF, DID, and/or other comparable arrangements in Arizona, California, Colorado, Connecticut, Florida, Georgia, Illinois, Indiana, Iowa, Louisiana, Maryland, Massachusetts, Michigan, New York, Ohio, Oklahoma, Oregon, Pennsylvania, Tennessee, Texas, Virginia, Washington, Wisconsin, and Wyoming. According to USTA, Alabama and Minnesota are considering interim portability requirements, while North Carolina requires carriers to negotiate interim portability as part of their interconnection agreements.

III. Report and Order

A. Importance of Service Provider Number Portability

1. Background

26. In the NPRM, we tentatively concluded that number portability benefits consumers of telecommunications services and would contribute to the development of competition among alternative providers of local telephone and other telecommunications services. With respect to service provider portability, we sought comment on the effects that local number portability, or lack thereof, would have on the local exchange marketplace. Specifically, we sought comment on the value consumers place on their telephone numbers, the deterrent effect that a lack of number portability would have on consumer decisions to change service providers, and any resultant effect on competition between incumbent local service providers and new competitors in local markets.

2. Discussion

27. Since we adopted the NPRM, Congress passed the 1996 Act, which requires all LECs to ''provide, to the extent technically feasible, number portability in accordance with requirements prescribed by the Commission.'' The 1996 Act defines number portability as ''the ability of users of telecommunications services to retain, at the same location, existing telecommunications numbers without impairment of quality, reliability, or convenience when switching from one telecommunications carrier to another.'' Accordingly, we hereby modify our proposed definition of number portability to conform to the statutory definition of number portability and note that the statutory definition of this term is synonymous with the NPRM's definition of ''service provider portability.''

28. Although some incumbent LECs assert that local exchange market competition will develop without number portability, the record developed in this proceeding confirms the congressional findings that number portability is essential to meaningful competition in the provision of local exchange services. Several state commissions have also recognized the significant role that number portability will play in the development of local exchange competition. We, therefore, affirm our tentative conclusion that number portability provides consumers flexibility in the way they use their telecommunications services and

promotes the development of competition among alternative providers of telephone and other telecommunications services.

29. We note that several studies described in the record demonstrate the reluctance of both business and residential customers to switch carriers if they must change numbers. For example, MCI has stated that, based on a nationwide Gallup survey, 83 percent of business customers and 80 percent of residential customers would be unlikely to change local service providers if they had to change their telephone numbers. Time Warner Holdings states that consumers are 40 percent less likely to change service providers if a number change is required. Citizens Utilities notes that approximately 85 percent of the discussions that its subsidiary, ELI, has with potential customers about switching providers end when those potential customers learn that they must change their telephone numbers. The study commissioned by Pacific Bell concludes that, without portability, new entrants would be forced to discount their local exchange service and other competing offerings by at least 12 percent below the incumbent LECs' prices in order to induce customers to switch carriers due to customers' resistance to changing numbers.

30. The ability of end users to retain their telephone numbers when changing service providers gives customers flexibility in the quality, price, and variety of telecommunications services they can choose to purchase. Number portability promotes competition between telecommunications service providers by, among other things, allowing customers to respond to price and service changes without changing their telephone numbers. The resulting competition will benefit all users of telecommunications services. Indeed, competition should foster lower local telephone prices and, consequently, stimulate demand for telecommunications services and increase economic growth.

31. Conversely, the record demonstrates that a lack of number portability likely would deter entry by competitive providers of local service because of the value customers place on retaining their telephone numbers. Business customers, in particular, may be reluctant to incur the administrative, marketing, and goodwill costs associated with changing telephone numbers. As indicated above, several studies show that customers are reluctant to switch carriers if they are required to change telephone numbers. To the extent that customers are reluctant to change service providers due to the absence of number portability, demand for services provided by new entrants will be depressed. This could well discourage entry by new service providers and thereby frustrate the pro-competitive goals of the 1996 Act.

B. The Commission's Role

1. Background

32. In the NPRM, we tentatively concluded that the Commission has a significant interest in promoting the nationwide availability of number portability due to its impact on interstate telecommunications. We based this interest on four grounds: (1) Our obligation to promote an efficient and fair telecommunications system; (2) the inability to separate the impact of number portability between intrastate and interstate telecommunications; (3) the likely adverse impact deploying different number portability solutions across the country would have on the provision of interstate telecommunications services; and (4) the impact that number portability could have on the use of the numbering resource, that is, ensuring that the use of numbers is efficient and does not contribute to area code exhaust.

33. In the 1996 Act, Congress expressly assigned to the Commission exclusive jurisdiction over that portion of the NANP that pertains to the United States. Moreover, Congress directed the Commission to prescribe regulations for LEC provision of number portability: Section 251(b)(2) requires carriers ''to provide, to the extent technically feasible, number portability in accordance with the requirements prescribed by the Commission.''

2. Positions of the Parties

34. Prior to passage of the 1996 Act, some LECs asserted that the Commission should neither adopt, nor direct the adoption of, number portability without performing a thorough cost/benefit analysis. Most parties, however, now agree that the 1996 Act clearly directs this Commission to implement long-term number portability. Moreover, some parties contend that this mandate reflects the fact that Congress has weighed the costs and benefits of implementing number portability. USTA adds, however, that the Commission may consider economic efficiencies in determining what rules to implement.

34. Several commenters, while agreeing that the Commission should take a leadership role, urge us to leave certain implementation issues to the states. USTA advocates allowing the states to determine their own deployment schedules. The California PUC asserts that the Commission's jurisdiction over number portability is not exclusive, and that states must be allowed to implement number portability methods that are most compatible with local exchange competition in each state.

3. Discussion

36. We believe that Congress has determined that this Commission should develop a national number portability policy and has specifically directed us to prescribe the requirements that all local exchange carriers, both incumbents and others, must meet to satisfy their statutory obligations. Section 251(b)(2) requires LECs ''to provide, to the extent technically feasible, number portability in accordance with the requirements prescribed by the Commission.'' Moreover, section 251(e)(1)'s assignment to the Commission of exclusive jurisdiction over that portion of the NANP that pertains to the United States gives us authority over the implementation of number portability to the extent that such implementation will affect the NANP. Consistent with the role assigned to the Commission by the 1996 Act, the record developed in this proceeding overwhelmingly indicates that the Commission should take a leadership role with respect to number portability. We, therefore, affirm our conclusion that we should take a leadership role in developing a national number portability policy. We further note that, in light of Congress's mandate to us to prescribe requirements for number portability, it is not necessary to engage in a cost/benefit analysis as to whether to adopt rules that require LECs to provide number portability in the first instance. We may consider economic and other factors, however, when determining the specific requirements in such rules.

37. The 1996 Act directs this Commission to adopt regulations to implement number portability, and we believe it is important that we adopt uniform national rules regarding number portability implementation and deployment to ensure efficient and consistent use of number portability methods and numbering resources on a nationwide basis. Implementation of number portability, and its effect on numbering resources, will have an impact on interstate, as well as local, telecommunications services. Ensuring the interoperability of networks is essential for deployment of a national number portability regime, and for the

prevention of adverse impacts on the provision of interstate telecommunications services or on the use of the numbering resource. We believe that allowing number portability to develop on a state-by-state basis could potentially thwart the intentions of Congress in mandating a national number portability policy, and could retard the development of competition in the provision of telecommunications services.

C. Performance Criteria for Long-Term Number Portability

1. Background

38. In the NPRM, we sought comment on what long-term number portability methods would be in the public interest. Specifically, we sought comment on various number portability proposals offered by different industry participants, including proposals by AT&T, MCI Metro, Stratus Computer and US Intelco, and GTE. We also sought comment on the extent to which these proposals would support certain services that we deemed important. We tentatively concluded that any method should support operator services and emergency services because they are critical to public safety and are important features of the public switched network. We also tentatively concluded that any number portability proposal should efficiently use telephone numbers. In addition, we discussed and sought comment on which of three call processing scenarios (*i.e.*, which carrier performs the database query in a database method), or any alternative, would best serve the public interest. We sought comment on whether telephone numbers should be portable within local calling areas, throughout a particular area code, state-wide, regionally, nationwide, or on some other basis, and how the geographic scope of portability would impact different types of carriers and their billing systems. We also asked whether number portability could be provided nationwide without significant network modifications.

2. Positions of the Parties

39. *Performance criteria versus selection of architecture.* Commenting parties differ on whether the Commission should establish performance criteria or guidelines that any number portability method must meet, or require the implementation of one national portability method. Many parties, including several state regulatory agencies, cable interests, and LECs, favor establishment of broad guidelines and interoperability criteria for implementing a long-term portability method. NYNEX maintains that this approach would encourage cooperative industry resolutions for a true number portability method and would properly account for legitimate state interests in the deployment of number portability. NYNEX further claims that guidelines would allow the Commission to ensure the implementation of compatible methods, with seamless call flows and service operation, without expending scarce resources by focusing on the detailed implementation of every method in each region of the country. The California Department of Consumer Affairs contends that the 1996 Act's pro-competitive policies mandate that the portability method adopted be flexible and allow for future innovation. GTE urges the Commission to determine the type of routing information to be employed, but leave selection of the triggering mechanism to the individual carriers. SBC Communications asserts that section 251(d)(1) only requires the Commission to outline principles for a long-term method within six months of enactment of the 1996 Act, not to adopt a specific method.

40. Conversely, some parties contend that requiring a single, national method would avoid the implementation of numerous inconsistent and inefficient approaches, and the need for carriers to adapt to different requirements in different states. Jones Intercable argues that allowing number portability to develop state-by-state would give the incumbent LECs the opportunity to delay development of local exchange competition. BellSouth and Nortel argue that a single long-term method is necessary to minimize the costs of implementation, operation, and maintenance; to protect billing systems against problems created by use of differing SS7 parameters; and to foster network integrity. PCIA claims that a state-regulated market would inhibit development of a nationwide wireless network. Arch/AirTouch Paging adds that deployment of different portability methods would adversely impact interstate telecommunications. Bell Atlantic and PCIA argue that a national method is more likely to conserve scarce numbering resources. Bell Atlantic further claims, however, that each individual carrier should be allowed the flexibility to utilize whatever architecture or technology within its own network best enables that carrier to implement whatever national method is selected. Moreover, some parties urge the Commission to select a particular method to be implemented nationwide, while others advocate allowing the industry to select the specific method.

41. Commenting parties suggest numerous performance criteria with which any long-term number portability method must comply. These include: (1) The ability to support emergency services, *i.e.*, 911 and enhanced 911 (E911) services; (2) the ability to support existing network services and capabilities, (*e.g.*, operator and directory services, vertical and advanced services, custom local area signaling services (also known as ''CLASS''), toll free and pay-per-call services, and intercept capabilities); (3) efficient use of numbering resources; (4) no initial change of telephone numbers; (5) no reliance on network facilities of, or services provided by, other service providers (*e.g.*, incumbent LECs) in order to route calls; (6) no degradation in service quality or network reliability (*e.g.*, no significant increase in call set-up time); (7) reliance on existing network infrastructure and functionalities to the extent possible; (8) equal application to both incumbents and new entrants (*i.e.*, carriers who receive ported numbers must also provide portability); (9) no proprietary interests or licensing fees; (10) the ability to migrate to location and service portability; and (11) no adverse impact in areas where portability has not been deployed.

42. *Call processing scenarios.* In the NPRM, we discussed three call processing scenarios. They were: (1) The terminating ''access'' provider (TAP) scenario, under which the database query is performed by the terminating access provider (usually the incumbent LEC, who recovers interstate access charges from interexchange carriers (IXCs) for terminating traffic under our existing access charge regime); (2) the originating service provider (OSP) scenario, under which the originating service provider performs the database query; and (3) the ''N minus 1'' (N − 1) scenario, under which the carrier immediately prior to the terminating service provider performs the database query or dip. In addition, ITN suggests a ''first-switch-that-can'' approach, under which the first switch that handles the call and has the capability to do the database dip performs the query.

43. Pacific Bell and Bell Atlantic recommend that carriers should be permitted to choose a call processing scenario to enable them to implement the QOR triggering mechanism in addition to LRN. These parties assert that QOR would eliminate unnecessary database queries, thereby decreasing the number of databases necessary to

provide number portability and the transmission capacity between switches and databases. In contrast, AT&T argues against allowing carriers to choose a call processing scenario, such as QOR, because doing so would delay deployment of a long-term number portability method and would result in significant network interoperability issues. MCI opposes implementation of QOR because it forces competitive LECs to rely on the incumbent LEC's network and results in inefficient routing. AT&T and MCI also argue against use of the RTP or QOR triggering mechanisms because they treat transferred and non-transferred numbers differently, and significantly increase post-dial delay and the potential for call blocking.

44. Most of the parties that favor the Commission's selection of a particular call processing scenario prefer the N−1 scenario because they believe it allows database queries to be made at the most efficient points in the process of routing telephone calls. In contrast, ITN states that use of the N−1 scenario may hinder the evolution from localized to national number portability environments. BellSouth contends that the Commission need not select a particular scenario because all four triggering mechanisms (OSP, TAP, N−1, and Look-Ahead) could exist simultaneously through engineering and business arrangements. Citizens Utilities and NCTA oppose the TAP scenario because it requires routing most calls to the incumbent LEC networks, thus denying terminating access charges to competitive providers.

45. *Rating and billing.* Several LECs, MCI, and MFS contend that any long-term method should preserve existing rating and billing systems to minimize costs and impact. Conversely, AT&T and Florida PSC argue that any long-term method should permit flexible rating and billing schemes. Pacific Bell, US West, and BellSouth also argue that the Commission must in this proceeding address billing problems, including issues relating to proper mileage, rating, calling cards, and billing format.

3. Discussion

46. *Performance criteria versus selection of architecture.* We conclude that establishing performance criteria that a LEC's number portability architecture must meet would better serve the public interest than choosing a particular technology or specific architecture. First, we believe that to date there appears to be sufficient momentum to deploy compatible methods, if not an identical method, nationwide. Every state that has selected a particular architecture for implementation within its state boundaries has selected the same method, LRN, and numerous states are reportedly following suit. With the exception of some of the incumbent LECs, most parties that advocate selection of a particular method at this time are also supporting the LRN method. Under these circumstances, mandating the implementation of a particular number portability architecture, or mandating that the same architecture be deployed nationwide, appears unnecessary. Second, such a mandate might actually delay the implementation of number portability. We are reluctant, based on the record in this proceeding, to select one of the proposed long-term methods. According to a number of parties, none of the currently supported methods, including LRN, has been tested or described in sufficient detail to permit the Commission to select the particular architecture without further consultation with the industry. If, however, we were to direct an industry body to recommend a specific number portability architecture, it would likely delay the implementation of number portability that already is underway in several states, and would create significant uncertainty for those switch vendors currently modifying switch software to accommodate LRN. Third, dictating implementation of a particular method could foreclose the ability of carriers to improve on those methods already being deployed or to implement hybrid (but compatible) methods.

47. We believe that our establishment of criteria for long-term number portability methods, however, will ensure an appropriate level of national uniformity, while maintaining flexibility to accommodate innovation and improvement. The deployment of a uniform number portability architecture nationwide will be important to the efficient functioning of the public switched telephone network and will reduce the costs of implementing number portability nationwide by allowing switch vendors to spread the costs of development over more customers. Moreover, a uniform deployment will allow switch manufacturers to work toward a single standard, thus avoiding the situation where different manufacturers partition the market among different methods.

48. *Performance Criteria.* We thus adopt the following minimum criteria. Any long-term number portability method, including call processing scenarios or triggering, must:

(1) Support existing network services, features, and capabilities;

(2) Efficiently use numbering resources;

(3) Not require end users to change their telecommunications numbers;

(4) Not require telecommunications carriers to rely on databases, other network facilities, or services provided by other telecommunications carriers in order to route calls to the proper termination point;

(5) Not result in unreasonable degradation in service quality or network reliability when implemented;

(6) Not result in any degradation of service quality or network reliability when customers switch carriers;

(7) Not result in a carrier having a proprietary interest;

(8) Be able to accommodate location and service portability in the future; and

(9) Have no significant adverse impact outside the areas where number portability is deployed.

We discuss each of these performance criteria in turn below.

49. First, we require that any long-term method support existing network services, features, or capabilities, such as emergency services, CLASS features, operator and directory assistance services, and intercept capabilities. The 1996 Act requires that consumers be able to retain their numbers ''without impairment of quality, reliability, or convenience when switching from one telecommunications carrier to another.'' Moreover, customers are not likely to switch carriers and retain their telephone numbers if they are required to forego services and features to which they have become accustomed. Thus, any long-term method that precludes the provision of existing services and features would place competing service providers at a competitive disadvantage.

50. The public interest also requires that service provider portability not impair the provision of network capabilities that are important to public safety, such as emergency services and intercept capabilities. In our proposal to ensure that PBXs and CMRS providers support enhanced 911 services, we reaffirmed that 911 services enable telephone users to receive fast response to emergency situations, and that broad availability of 911 and E911 services best promotes ''safety of life and property through the use of wire and radio communication.'' In addition, the Communications Assistance for Law Enforcement Act requires telecommunications carriers generally to provide capabilities that enable secure, reliable, and non-intrusive law enforcement interception of call setup information and call content so that law enforcement agencies can intercept and monitor calls when necessary.

51. Second, we require that any long-term method efficiently use numbering resources. Telephone numbers are the means by which commercial and residential consumers gain access to, and reap the benefits of, the public switched telephone network. In recent years, the explosive growth of wireless services has caused an equally dramatic increase in the consumption of telephone numbers. Indeed, in January 1995, carriers began to deploy interchangeable NPA (INPA) codes because all NPA codes had been exhausted. The anticipated shortage of numbers has prompted several BOCs to propose the use of area code overlays. The increased use of overlays and area code splits has resulted in both industry and consumer inconvenience and confusion. The consumption rate of NANP resources is likely to accelerate with the entry of new wireline and wireless carriers. Thus, we conclude that deploying a long-term number portability method that rapidly depletes numbering resources would undermine the efforts of the industry, the states, and the Commission to ensure sufficient numbering resources.

52. Third, deployment of a long-term method should not require customers to make any telecommunications number change. The 1996 Act mandates that end users be able ''to retain * * * existing telecommunications numbers * * * when switching from one telecommunications carrier to another.'' Requiring any number change would contravene this basic requirement. Congress noted that the ability to switch service providers is only meaningful if customers can retain their telephone numbers.

53. Fourth, we require that any long-term method ensure that carriers have the ability to route telephone calls and provide services to their customers independently from the networks of other carriers. Requiring carriers to rely on the networks of their competitors in order to route calls can have several undesirable effects. For example, dependence on the original service provider's network to provide services to a customer that has switched carriers contravenes the choice made by that customer to change service providers. In addition, such dependence creates the potential for call blocking by the original service provider and may make available to the original service provider proprietary customer information. Moreover, methods which first route the call through the original service provider's network in order to determine whether the call is to a ported number, and then perform a query only if the call is to be ported, would treat ported numbers differently than non-ported numbers, resulting in ported calls taking longer to complete than unported calls. This differential in efficiency would disadvantage the carrier to whom the call was ported and impair that carrier's ability to compete effectively against the original service provider. Finally, dependence on another carrier's network also reduces the new service provider's ability to control the routing of telephone calls to its customers, thus inhibiting its ability to control the costs of such routing. For these reasons, a long-term number portability method should not require dependency on another carrier's network. We note that this criterion does not prevent individual carriers from determining among themselves how to process calls, including a method by which a carrier voluntarily agrees to use the original service provider's network.

54. We recognize that this criterion will effectively preclude carriers from implementing QOR. Those carriers that oppose QOR argue that it would treat ported and non-ported numbers differently, force reliance on the incumbent LEC's network, increase post-dial delay and the potential for call blocking, result in inefficient routing, create significant network interoperability issues, and delay deployment of a long-term number portability method. There is little evidence in the record to support the claim that allowing carriers to implement QOR would result in significant cost savings. Pacific Bell submitted summary figures indicating that it would save approximately $14.2 million per year assuming that 20 percent of subscribers port their numbers if it implemented QOR. These savings, which represent less than 0.2 percent of Pacific Bell's total annual operating revenues, appear insignificant in relation to the potential economic and non-economic costs to competitors if QOR is used. According to AT&T, using QOR on Lucent switches is more cost effective only if less than 12 percent of subscribers have ported their numbers. Similarly, AT&T asserts that using QOR on Siemens switches is more cost effective only if less than 23 percent of subscribers have ported their numbers. In addition, because carriers using QOR may be required to send a QOR message to another carrier's switch to determine if a customer has transferred the number, the second carrier must have the ability to recognize and respond to the QOR message, which also may increase its costs. Based on the record before us, we conclude that the competitive benefits of ensuring that calls are not routed through the original carrier's network outweigh any cost savings that QOR may bring in the immediate future.

55. Fifth, as a general matter, we require that the implementation of any long-term method not unreasonably degrade existing service quality or network reliability. Consumers, both business and residential, rely on the public switched telephone network for their livelihood, health and safety. Jeopardizing the reliability of the network would stifle business growth and economic development, and endanger individuals' personal safety and convenience. Consumers, both business and residential, have also come to expect a certain level of quality and convenience in using basic telecommunications services. We note that this Commission has repeatedly affirmed its commitment to maintaining service quality and network reliability. We, therefore, require that any long-term method of providing number portability not cause any unreasonable degradation to the network or the quality of existing services. This requirement extends to degradation that affects carriers operating, and end users obtaining services, outside as well as within the area of portability.

56. Sixth, once long-term number portability is implemented, we require that customers not experience any degradation of service quality or network reliability when they port their numbers to other carriers. We reiterate that the 1996 Act requires that consumers be able to retain their numbers ''without impairment of quality, reliability, or convenience when switching from one telecommunications carrier to another.'' We interpret this mandate to mean, at a minimum, that when a customer switches carriers, that customer must not experience a greater dialing delay or call set up time, poorer transmission quality, or a loss of services (such as CLASS features) due to number portability compared to when the customer was with the original carrier.

57. Seventh, we require that no carrier have a proprietary interest in any long term method. A telecommunications carrier may not own rights to, or have a proprietary interest in, number portability technology. We believe that the requirement in the 1996 Act that the costs of number portability be borne on a competitively neutral basis precludes carrier ownership of the long-term method, and their collection of licensing or other fees for use of the method. In addition, it would be competitively unfair if a LEC providing portability

were to benefit directly, through licensing fees or a proprietary interest, from its competitors' use of portability. We note that one of the first criteria required by the Illinois task force in selecting a number portability method was that it be non-proprietary.

58. Eighth, we require that any long-term method be able to accommodate service and location portability in the future. Although we do not at this time mandate provision of service or location portability, we recognize that service and location portability have certain benefits, and we may take steps to implement them in the future if demand for these services develops. As our society becomes increasingly mobile, the importance that consumers attribute to the geographic identity of their telephone numbers may change. It is, therefore, in the public interest to take steps now to ensure that we do not foreclose realization of future economies of scope.

59. Finally, we require that any long-term method not have a significant adverse impact on carriers operating, and end users obtaining services, outside the area of number portability. We believe it is fundamentally unfair to impose any new or different obligations on carriers and customers that do not benefit from service provider portability. Indeed, we are adopting a phased approach to implementation so that number portability is available only in the most populous local markets where competition already has begun to develop or is likely to develop in the near term.

60. We do not believe it is necessary to require that a long-term method utilize existing network infrastructure and functionalities to the extent possible, as some commenting parties have suggested. Minimizing the costs of implementing a long-term method should be in the best interests of all the parties involved in such implementation. This conclusion is also consistent with our tentative conclusion that the carrier-specific costs that are not directly related to number portability must be borne by the individual carriers. Thus, existing local service providers have an incentive to minimize the extent of the necessary modifications and upgrades, as well as the costs of implementing number portability-specific software. Moreover, while new entrants may not need to modify existing networks, they must deploy and build networks with at least the same capabilities as those of the incumbents if they are to provide number portability.

61. We also decline to require carriers that receive ported numbers also to provide portability because we believe the 1996 Act renders such a requirement unnecessary. Specifically, section 251(b)(2) imposes a duty to provide number portability on *all* LECs—incumbents as well as new entrants. In light of the fact that the 1996 Act applies this duty across all LECs, establishing a reciprocity performance criterion would be needlessly redundant.

62. *Call processing scenarios.* We decline to specify the carrier that must perform the database query in a database method, because we recognize that individual carriers may wish to determine among themselves how to process calls under alternative scenarios. We therefore leave to local exchange carriers the flexibility to choose and negotiate the scenario that best suits their networks and business plans, as long as they act consistently with the requirements established by this Order. While our criterion requiring carriers to be able to route calls and provide service independently from other carriers' networks may preclude unilateral use of the TAP scenario by a particular carrier, there may be instances where carriers agree to use the TAP scenario, or where the terminating provider is the only carrier capable of performing the database query. In those instances, our performance criterion would not preclude use of the TAP scenario.

63. *Rating and billing.* Finally, we decline to regulate the rating and billing of local wireline calls to end users in connection with a long-term number portability method. Traditionally, the billing and rating of local wireline calls—including the establishment of mileage standards, procedures for calling cards, and billing format—have been left to the purview of the states and the carriers themselves. While several parties have raised rating and billing questions with regard to number portability, we believe that such issues are more properly addressed by the states.

D. Mandate of Number Portability

1. Background

64. In the NPRM, we sought comment on the estimated time to design, build, and deploy a long-term service provider number portability system. We also requested that parties address what network and other modifications would be necessary to effect the transition to portability. The 1996 Act mandates that all LECs ''provide, to the extent technically feasible, number portability in accordance with requirements prescribed by the Commission.''

2. Position of the Parties

65. *Mandate Implementation By A Date Certain.* The competitive local exchange providers generally contend that the Commission should mandate the availability of number portability by a date certain. The incumbent LECs, however, caution the Commission not to act with undue haste by mandating the implementation of number portability by a date certain. Indeed, BellSouth claims that the 1996 Act's omission of a deadline for implementation indicates Congress's intent not to require a date certain at this time. It adds that the industry must first give careful attention to developing an implementation checklist that will ensure that the necessary tasks for the implementation are properly identified and performed. Instead of establishing a mandatory implementation date, some LECs contend that the Commission should direct an industry body, such as the INC, to determine the most appropriate schedule for deployment of a long-term solution. Other commenters argue that the implementation schedule should be determined by state regulatory bodies. Pacific Bell warns that a Commission-mandated solution at this time would be premature and cites a late proposal introduced by ITN as an illustration that the optimal solution may not yet have been introduced.

66. The wireless industry offers various implementation plans. For instance, PageNet urges the Commission to establish federal guidelines for number portability, and at a specified time in the future, to evaluate the industry's standards using the guidelines through a notice and comment proceeding. However, Omnipoint believes the Commission should act more aggressively in mandating service provider portability by a date certain.

67. *Time Estimates for Deployment.* Parties differ on their estimates for deployment. AT&T asserts that virtually all of the equipment vendors participating in the Illinois number portability task force indicate that they can provide most upgrades necessary to implement LRN by the second quarter of 1997. As noted above, Illinois, Georgia, and Colorado plan to deploy LRN in mid-1997. New York also expects to deploy LRN in mid-1997, though deployment in certain AT&T switches is expected to begin earlier. Michigan has ordered that implementation of long-term number portability in Michigan start at the same time that implementation begins in Illinois. BellSouth, however, estimates that three to five years are required to deploy a

number portability system that addresses all the necessary issues.

68. Parties also differ on the interpretation of ''technically feasible'' as that term is used in section 251(b)(2) of the 1996 Act. GTE argues that the term should not be equated with ''technically possible'' because cost and timing considerations cannot be separated from the concept of technical feasibility. GTE also maintains that no long-term solution proposed is currently technically feasible, since they all require further information on costs, operation, and reliability. Bell Atlantic contends that deploying a system that is technically feasible, but inefficient, may not be consistent with Congress's goal of a ''rapid, efficient'' telecommunications system. Bell Atlantic and BellSouth also claim that LRN is merely a call handling protocol, as opposed to a technical solution for number portability.

69. In contrast, Time Warner Holdings and Cox argue that ''feasible'' must be given common dictionary meaning—''capable of being done, executed or effected''—and does not mean ''commercially available.'' Time Warner Holdings points out that equal access and 800 number portability proved to be technically feasible even when they were not commercially available. Time Warner Holdings claims, moreover, that LECs control commercial availability because vendors will not develop and manufacture portability methods until LECs demand them. Similarly, Sprint argues that technically feasible does not mean that every operational and regulatory issue must be resolved before any decision on national number portability can be made. Sprint further claims that Congress's use of the phrase ''technically feasible'' precludes any consideration of economic feasibility. AT&T and MCI argue that LRN is technically feasible, although they do not explicitly address the precise meaning of the statutory language.

70. *Phased Implementation*. Most parties addressing the implementation of number portability caution against a flash-cut approach (*i.e.,* deployment nationwide simultaneously). USTA argues that because section 251(b)(2) only requires provision of number portability, not deployment of the necessary software and network upgrades, LECs need only deploy portability upon a *bona fide* request. Most parties, however, recommend that service provider portability be deployed on a per-market basis within a period of time specified by the Commission. For example, Competitive Carriers proposes that service provider portability be implemented in the 100 largest MSAs within 24 months of this Order. Similarly, Sprint proposes that the Commission adopt a phased approach requiring local service providers to deploy a long-term solution upon receipt of a *bona fide* request from a certified carrier: (1) In the top 100 MSAs by the end of fourth quarter 1997; (2) in the next 135 MSAs, within 3–4 years after this Order is issued; and (3) within any remaining areas, beginning in the fifth year after this Order is issued. Omnipoint maintains that service provider portability should be made available in the top 100 MSAs between October of 1997 and October of 1998, while GO Communications proposes implementation of service provider portability in the major metropolitan areas by early 1997. MFS supports a final cut-over in the 100 largest MSAs by October 1997, with an initial cut-over in the top 35 MSAs on March 31, 1997. It adds that, in order to deploy this capability as competition develops in specific markets, number portability should be implemented by LECs within 18 months of activation of an NXX code in the Local Exchange Routing Guide (LERG) and assignment to a competitor. AT&T has indicated that LRN deployment could begin in the third quarter of 1997 in one MSA in each of the seven BOC regions, followed by deployment in at least three additional MSAs per region during both fourth quarter 1997 and first quarter 1998. Once this initial phase is completed, AT&T suggests that the Commission could require LRN to be deployed in at least four additional MSAs during both second and third quarters 1998, or 105 MSAs total. AT&T's proposed plan would result in deployment of LRN software in a total of 7 MSAs in third quarter 1997, 21 additional MSAs in fourth quarter 1997, 21 additional MSAs in first quarter 1998, 28 additional MSAs in second quarter 1998, and 28 additional MSAs in third quarter 1998. AT&T further asserts that its proposed schedule would require major switch manufacturers to update switch software at a rate of 53 switches per week, and that one major switch manufacturer has claimed that it alone can update 50 switches per week. MCI urges that number portability be deployed in the top 100 MSAs, by population, over a 10 month period beginning no later than June 30, 1997. After implementation is complete in the initial 100 MSAs, MCI recommends that the remaining MSAs be converted based on written requests from carriers filed with the Commission, which may order implementation in a particular MSA to be completed within six months of the request. MCI and Time Warner Holdings also support the notion of requiring number portability implementation within six months of a request of a telecommunications carrier. Finally, Ameritech argues it is premature to set a deployment schedule for LRN because there are several operational issues yet to be resolved. It further argues that schedules proposed by various carriers are too aggressive and exceed the resources of the industry.

71. Switch vendors assert that LRN software will be generally available for service providers to deploy in 1997. Lucent Technologies plans general availability of LRN software for March 21, 1997, for its 1A ESS switch; March 31, 1997, for its 5ESS–2000 switch; and May 1, 1997, for its 4ESS switch. Lucent asserts that, after the new software becomes generally available, it will be able to support up to 50 software release updates per week for the 5ESS and 1A ESS switches for North America (each release update upgrades the software for one switch). Nortel states that its LRN software will be available in the second quarter of 1997 for its DMS–100, DMS–200, and DMS–500 switches, and will be available in the third quarter of 1997 for its DMS–10 and TOPS switches. Siemens Stromberg-Carlson asserts that its LRN software will be available for testing on its EWSD switch in its Release 14.E generic in October 1996, and will be generally available in the first quarter of 1997. Siemens further claims that upgrades to EWSD switches deployed within the top 100 MSAs can be completed within five months of the date of general availability. Ericsson asserts that its LRN software for Ericsson SCPs will be generally available in the second quarter of 1997, and that its LRN software for Ericsson SSPs will be generally available in the third quarter of 1997. Ericsson expects that 6–7 switch upgrades can be accomplished each week, with each upgrade taking 3–4 days.

72. The Illinois Commerce Commission argues that a phased approach—implementing number portability in those areas where local competition is developing—may be more cost-effective and more feasible technically than a nationwide uniform deadline. Similarly, US West contends that a nationwide uniform deadline for service provider portability is neither practical nor necessary due to differing levels of competition. Sprint asserts that a phased implementation will accommodate the concerns of the small LECs, arguing that a phased approach best balances the need for rapid deployment with the capital constraints facing individual carriers. Nextel asserts that a phased approach is more efficient

because it results in the introduction of number portability where the demand for service provider portability is greatest. Bell Atlantic and US West contend that state agencies should determine when and where service provider portability should be introduced within their respective jurisdictions. Alternatively, US West suggests that the Commission could use the same approach to implementing service provider portability that it adopted in implementing equal access for independent LECs.

73. *Rural and Small LEC Exemption*. In comments filed prior to passage of the 1996 Act, GVNW, TDS Telecom, NECA, and OPASTCO argue that, if the Commission mandates the implementation of number portability, it should exempt small and rural LECs from such a mandate. GNVW, NECA, and NTCA claim that the demand for service provider portability is significantly less in areas served by rural and small LECs because local exchange competition is not likely to develop there soon, if at all.

3. Discussion

74. Section 251(b) requires that all local exchange carriers, as defined by section 153(26), ''provide, to the extent technically feasible, number portability in accordance with requirements prescribed by the Commission.'' We believe that requiring implementation of long-term number portability by a date certain is consistent with the 1996 Act's requirement that LECs provide number portability as soon as they can do so and will advance the 1996 Act's goal of encouraging competition in the local exchange market. The record indicates that at least one long-term method will be available for deployment in mid-1997.

75. We decline the suggestion of some parties that we direct an industry body to determine an appropriate implementation plan. The INC has been analyzing the issues surrounding number portability for over two years. Delegating responsibility for number portability implementation to an industry group such as the INC would unnecessarily delay implementation of number portability. Similarly, we reject BellSouth's arguments in favor of delaying implementation for three to five years. We believe such a delay is inconsistent with the 1996 Act's requirement that LECs make number portability available when doing so is technically feasible, as well as with the pro-competitive goals of the 1996 Act, and would not serve the public interest.

76. Carriers filing comments in this proceeding have suggested various deployment schedules, with most suggesting deployment within two years of a Commission order or sooner. According to current schedules in Illinois, Georgia, Colorado, Maryland, and New York, AT&T's LRN method is scheduled for deployment (most likely excluding necessary field testing) beginning in mid-1997. Thus, the record indicates that one method for providing number portability will be available in mid-1997.

77. Pursuant to our statutory authority under the 1996 Act, we require local exchange carriers operating in the 100 largest MSAs to offer long-term service provider portability commencing on October 1, 1997, and concluding by December 31, 1998, according to the deployment schedule set forth in Appendix F of the Report and Order. We require deployment in one MSA in each of the seven BOC regions by the end of fourth quarter 1997, 16 additional MSAs by the end of first quarter 1998, 22 additional MSAs by the end of second quarter 1998, 25 additional MSAs by the end of third quarter 1998, and 30 additional MSAs by the end of fourth quarter 1998. As a practical matter, this obligation requires LECs to provide number portability to other telecommunications carriers providing local exchange or exchange access service within the same MSA. This schedule is consistent with switch vendor estimates that software for at least one long-term number portability method will be generally available for deployment by carriers around mid-1997, and with the schedule proposed by AT&T. One major switch manufacturer has claimed that it alone can support the deployment of number portability software in 50 switches per week. We conclude that a schedule consistent with AT&T's proposed schedule, which would require all of the major switch manufacturers collectively to update switch software at a total rate of 53 switches per week, appears workable.

78. We note that, in establishing this schedule, we have relied upon representations of switch vendors concerning the dates by which the necessary switching software will be generally available. As a result, our deployment schedule depends directly upon the accuracy of those estimates and the absence of any significant technical problems in deployment. We delegate authority to the Chief, Common Carrier Bureau, to monitor the progress of local exchange carriers implementing number portability, and to direct such carriers to take any actions necessary to ensure compliance with this deployment schedule. We expect that the industry will work together to resolve any outstanding issues, technical or otherwise, which are involved with providing long-term number portability in accordance with our requirements and deployment schedule. We note that while we prescribe the time constraints within which LECs must implement number portability, we strongly encourage carriers to provide such portability before the Commission-imposed deadlines.

79. In addition, we direct the carriers that are members of the Illinois Local Number Portability Workshop to conduct a field test of LRN or another technically feasible long-term number portability method that comports with our performance criteria concluding no later than August 31, 1997. We select the Chicago area for the field test because the record indicates that the Illinois workshop was responsible for drafting requirements for switching software currently being developed by switch manufacturers. Because of the significant work which has been done on behalf of the Illinois workshop, we believe the Chicago area is the best site within which to conduct a field test. The field test should encompass both network capability and billing and ordering systems, as well as maintenance arrangements. We delegate authority to the Chief, Common Carrier Bureau, to monitor developments during the field test. We further direct that the carriers participating in the test jointly file with the Bureau a report of their findings within 30 days following completion of the test. While we do not routinely order field testing of telecommunications technologies as part of rulemaking proceedings, we have a significant interest in ensuring the integrity of the public switched network as number portability is deployed nationwide. We believe a field test will help to identify technical problems in advance of widespread deployment, thereby safeguarding the network.

80. After December 31, 1998, each LEC must make long-term number portability available in smaller MSAs within six months after a specific request by another telecommunications carrier in the areas in which the requesting carrier is operating or plans to operate. Telecommunications carriers may file requests for number portability beginning January 1, 1999. Such requests should specifically request long-term number portability, identify the discrete geographic area covered by the request, and provide a tentative date six or more months in the future when the carrier expects to need number

portability in order to port prospective customers.

81. We believe that this deployment schedule is consistent with the requirements of sections 251(b)(2) and (d), which give the Commission responsibility for establishing regulations regarding the provision of number portability to the extent technically feasible. As the record indicates, long-term number portability requires the use of one or more databases. Such databases have yet to be deployed. As indicated above, the methods for providing long-term number portability that would satisfy our criteria require the development of new switching software that is not currently available, but is under development. The record indicates, however, that at least one method of long-term number portability will be technically feasible by mid-1997. Requiring number portability to be fully operational in the largest 100 MSAs by December 31, 1998, would allow a reasonable amount of time to install the appropriate generic and application software in the relevant switches. Moreover, such a phased deployment is preferable to implementing nationwide number portability simultaneously in all markets (or implementing this service in multiple large MSAs at the same time) because a phased deployment would be less likely to impose a significant burden on those carriers serving multiple regions of the country. Specifically, our phased approach spreads the implementation over 15 months, thus easing the burden on carriers serving multiple regions by limiting the number of MSAs in which implementation is required during a particular calendar quarter. In addition, the burden on such carriers should be less than that upon carriers in smaller markets because the latter may be required to undertake hardware upgrades whereas larger carriers may already have upgraded their switches. Our phased approach would also avoid the potential strain on vendors caused by implementation in all the largest 100 MSAs on or around a single date, as well as help to safeguard the integrity of the public switched telephone network.

82. In addition, we believe that our phased implementation of long-term number portability is in the public interest and supported by the record. Our phased deployment schedule takes in account the differing levels of local exchange competition that are likely to emerge in the different geographic areas throughout the country. Thus, our deployment schedule is designed to ensure that number portability will be made available in those regions where competing service providers are likely to offer alternative services. We believe that competitive local service providers are likely to be providing service in the major metropolitan areas soon. In those areas beyond the 100 largest MSAs, however, the actual pace of competitive entry into local markets should determine the need for service provider portability. We therefore agree with those parties that argue that, in markets outside of the 100 largest MSAs, long-term number portability should be deployed within six months of a specific request from another telecommunications provider. We believe a six-month interval is appropriate given the more significant network upgrades that may be necessary for carriers operating in these smaller areas.

83. We note that the 1996 Act exempts rural telephone companies from the ''duty to negotiate * * * the particular terms and conditions of agreements to fulfill the (interconnection) duties'' created by the 1996 Act, including the provision of number portability, and that carriers satisfying the statutory criteria contained in section 251(f) may be exempt from the obligations to provide number portability as set forth herein. In addition, section 251(f)(2) permits a LEC with fewer than two percent of the country's total installed subscriber lines to petition a state commission for suspension or modification of the requirements of section 251. In our recent notice of proposed rulemaking implementing sections 251 and 252 of the Communications Act, we address the application of this statutory exemption, and we believe that specific application of such provisions is best addressed in that proceeding. We intend to establish regulations to implement these provisions by early August 1996, consistent with the requirements of section 251(d).

84. In our Second Further Notice of Proposed Rulemaking on Billed Party Preference (BPP), we stated that the Commission would further consider the feasibility of implementing BPP in the upcoming proceeding to implement the 1996 Act's local number portability requirements in section 251(b)(2). We recognize that our deployment schedule may have implications for the provision of BPP, the ability of a customer to designate in advance which Operator Service Provider (OSP) should be billed when that customer makes a call from a pay telephone. This capability may involve querying a database, similar to the proposed long-term number portability methods. In the *BPP Second Further Notice* (61 FR 30581 (June 17, 1996)), we noted that the record indicated that the cost of BPP would likely be substantial, and we sought comment on the costs of requiring OSPs to disclose their rates for 0+ calls in a variety of circumstances. In that NPRM, we reaffirmed our belief that BPP would generate significant benefits for consumers, but stated that, at this time, unless local exchange providers were required to install the facilities needed to perform database queries for number portability purposes, the incremental cost to query the database for the customer's preferred OSP would outweigh the potential incremental benefits that BPP would provide. While we continue to recognize the benefits that could be achieved through such an approach, we note that creating the capability for all LECs to query OSP databases would require a uniform deadline to nationwide number portability which, for the reasons discussed above, is not in the public interest. Nonetheless, as indicated by our deployment schedule, LECs in the 100 largest MSAs will be required to install the capability to query number portability databases by December 31, 1998, which could then potentially be utilized for BPP in those markets.

85. Finally, we delegate to the Chief, Common Carrier Bureau, the authority to waive or stay any of the dates in the implementation schedule, as the Chief determines is necessary to ensure the efficient development of number portability, for a period not to exceed 9 months (*i.e.*, no later than September 30, 1999). In the event a carrier is unable to meet our deadlines for implementing a long-term number portability method, it may file with the Commission, at least 60 days in advance of the deadline, a petition to extend the time by which implementation in its network will be completed. We emphasize, however, that carriers are expected to meet the prescribed deadlines, and a carrier seeking relief must present extraordinary circumstances beyond its control in order to obtain an extension of time. A carrier seeking such relief must demonstrate through substantial, credible evidence the basis for its contention that it is unable to comply with our deployment schedule. Such requests must set forth: (1) The facts that demonstrate why the carrier is unable to meet our deployment schedule; (2) a detailed explanation of the activities that the carrier has undertaken to meet the implementation schedule prior to requesting an extension of time; (3) an identification of the particular switches for which the extension is requested; (4) the time within which the carrier will

complete deployment in the affected switches; and (5) a proposed schedule with milestones for meeting the deployment date.

E. Database Architecture and Administration

1. Background

86. In the NPRM, we sought comment on the type of database architecture that would best serve the public interest and the technical feasibility of deploying a single national database or a series of regionally distributed databases. We also sought comment on the type of information that should be contained within such database(s) and who should have access to such database(s). Finally, we sought comment on administration of the number portability database(s), *i.e.*, who should administer and maintain the database(s), how should they be funded, how should the administrator(s) be selected, and what responsibilities should the administrator(s) be given.

2. Position of the Parties

Many parties assert that any long-term number portability solution will require the use of one or more databases. Jones Intercable states that use of a database solution: (1) Makes numbering information available to numerous competing carriers; (2) provides the platform to offer other types of number portability; and (3) permits the deployment of other advanced services. ACTA, AT&T, and Citizens Utilities assert that the database architecture of a long-term solution should resemble the architecture used for the toll free database, but with databases distributed on a regional basis. US Intelco and MCI note that multiple, regional databases, rather than one national database, will be necessary to process the data for all portable geographic numbers. Only Scherers Communications claims that a single national database will be able to accommodate all portable numbers, geographic and non-geographic, and will ensure consistency and cost efficiency.

88. AT&T and several BOCs support the ability of individual carriers to download information from the regional databases to routing systems associated with their own networks, *i.e.*, downstream databases. Several other parties add that access to the regional databases must be open, and carriers, individually or collectively, must be permitted to develop routing databases that obtain information from the regional databases. ITN contends that an architecture of regionally-deployed SCPs which correspond to blocks of NPA–NXXs would give carriers the option of maintaining their own customer records or having a third party provider perform such functions. It adds that such openness in data management will help ensure number portability to all service providers, including providers of service to end users and various other intelligent network service providers.

89. Almost all parties, incumbent LECs and new entrants, support administration of the database(s) by a neutral third party. MFS adds that the operator of a number portability database must not be able to gain a competitive advantage by manipulating the data or controlling access to the database. ACTA urges that the database administrator be a non-profit organization selected through a competitive bidding process that excludes LECs and IXCs, with responsibilities established by the North American Numbering Plan Administrator (NANPA).

90. Competitive Carriers assert that the database(s) should include only service provider portability-specific information, and that the carriers using the database should be responsible for the integrity of these data. Teleport claims that an industry group should determine the contents of any distributed databases, subject to the Commission's criteria. The Texas Advisory Commission also asserts that the database(s) should easily integrate with 911 databases.

3. Discussion

91. Section 251(b) directs the Commission to establish requirements governing the provision of number portability without specifically addressing the appropriate database architecture necessary for long-term number portability. We find that an architecture that uses regionally-deployed databases best serves the public interest and is supported by the record. The deployment of multiple regional databases will facilitate the ability of LECs to provide number portability by reducing the distance that such carriers will have to transmit carrier routing information. This, in turn, should reduce the costs of routing telephone calls based on such data. Moreover, a nationwide system of regional databases would relieve individual carriers of the burden of deploying multiple number portability databases over various geographic areas. A regionally-deployed database system will ensure that carriers have the number portability routing information necessary to route telephone calls between carriers' networks, and will also promote uniformity in the provision of such number portability data. We agree with those parties arguing that one national number portability database is not feasible. The potential amount of information that such a database would be required to process would, according to parties in this proceeding, likely become overwhelming as number portability is deployed nationwide.

92. We also conclude that it is in the public interest for the number portability databases to be administered by one or more neutral third parties. Both the record and the Commission's recent decision to reorganize the administration of telephone numbers under the NANP support neutral third party administration of these facilities. We also note that section 251(e)(1) requires the Commission to ''create or designate one or more impartial entities to administer telecommunications numbering and to make such numbers available on an equitable basis.'' Neutral third party administration of the databases containing carrier routing information will facilitate entry into the communications marketplace by making numbering resources available to new service providers on an efficient basis. It will also facilitate the ability of local service providers to transfer new customers by ensuring open and efficient access for purposes of updating customer records. As we stated above, the ability to transfer customers from one carrier to another, which includes access to the data necessary to perform that transfer, is important to entities that wish to compete in the local telecommunications market. Neutral third party administration of the carrier routing information also ensures the equal treatment of all carriers and avoids any appearance of impropriety or anti-competitive conduct. Such administration facilitates consumers' access to the public switched network by preventing any one carrier from interfering with interconnection to the database(s) or the processing of routing and customer information. Neutral third party administration would thus ensure consistency of the data and interoperability of number portability facilities, thereby minimizing any anti-competitive impacts.

93. We hereby direct the NANC to select as a local number portability administrator(s) (LNPA(s)) one or more independent, non-governmental entities that are not aligned with any particular telecommunications industry segment within seven months of the initial meeting of the NANC. Selection of the LNPA(s) falls within the duties we established for the NANC in the

Numbering Plan Order (60 FR 38737 (July 28, 1995)) and the NANC Charter. The NANC charter describes the scope the NANC's activities:

> The purpose of the (NANC) is to advise the (Commission) and to make recommendations, reached through consensus, that foster efficient and impartial number administration. The (NANC) will develop policy on numbering issues, initially resolve disputes, and select and provide guidance to the North American Numbering Plan Administrator.

The fundamental purpose of the NANC is to act as an oversight committee with the technical and operational expertise to advise the Commission on numbering issues. The Commission has already directed the NANC to select a NANPA. We believe the designation of a centralized entity to select and oversee the LNPA(s) is preferable to ensure consistency and to provide a national perspective on number portability issues, as well as to reduce the costs of implementing a national number portability plan.

94. We believe that the NANC is especially well-situated to handle matters relating to local number portability administration because of its similarity to the administration of central office codes. Both functions rely heavily on the use of databases, and both involve administration of NANP resources, only at different levels. Administration of number portability data is essentially the administration of telephone numbers (as opposed to NXX codes) between different carriers.

95. We believe that the NANC should determine, in the first instance, whether one or multiple administrators should be selected, whether LNPA(s) can be the same entity selected to be the NANPA, how the LNPA(s) should be selected, the specific duties of the LNPA(s), and the geographic coverage of the regional databases. Once the NANC has selected the LNPA(s) and determined the locations of the regional databases, it must report its decisions to the Commission. The NANC should also determine the technical interoperability and operational standards, the user interface between telecommunications carriers and the LNPA(s), and the network interface between the SMS and the downstream databases. Finally, the NANC should develop the technical specifications for the regional databases, *e.g.,* whether a regional database should consist of a service management system (SMS) or an SMS/SCP pair. In reaching its decisions, the NANC should consider the most cost-effective way of accomplishing number portability. We note that it will be essential for the NANPA to keep track of information regarding the porting of numbers between and among carriers. We thus believe it necessary for the NANC to set guidelines and standards by which the NANPA and LNPA(s) share numbering information so that both entities can efficiently and effectively administer the assignment of the numbering resource. For example, the NANC might require that the databases easily integrate with 911 databases.

96. We recognize that authorizing the NANC to select a LNPA(s) may have an impact on Illinois's April 1996 selection of Lockheed-Martin as the administrator of the Illinois SMS, as well as the Maryland and Colorado task forces' plans to release their RFPs for their SMS administrators in the second quarter of 1996. Therefore, in light of these and other ongoing efforts by state commissions, we conclude that any state that prefers to develop its own statewide database rather than participate in a regionally-deployed database may opt out of its designated regional database and implement a state-specific database. We direct the Chief, Common Carrier Bureau, to issue a Public Notice that identifies the administrator selected by the NANC and the proposed locations of the regional databases. A state will have 60 days from the release date of the Public Notice to notify the Common Carrier Bureau and NANC that the state does not wish to participate in the regional database system for number portability. Carriers may challenge a state's decision to opt out of the regional database system by filing a petition with the Commission. Relief will be granted if the petitioner can demonstrate that the state decision to opt out would significantly delay deployment of permanent number portability or result in excessive costs to carriers. We note that state databases would have to meet the national requirements and operational standards recommended by the NANC and adopted by this Commission. In addition, such state databases must be technically compatible with the regional system of databases and must not interfere with the scheduled implementation of the regional databases.

97. We further note that any administrator selected by a state prior to the release of this Order that wishes to bid for administration of one of the regional databases must submit a new proposal in accordance with the guidelines established by the NANC. We emphasize that nothing in this section affects any other action that the Commission may take regarding the delegation and transfer of functions related to number administration. We delegate authority to the Chief, Common Carrier Bureau, to monitor the progress of the NANC in selecting the LNPA(s) and in developing and implementing the database architecture described above.

98. We believe that telecommunications carriers should have open access to all regional databases. Just as we conclude all carriers must have equal access to any long-term number portability method, and that no portion of a long-term number portability method should be proprietary to any carrier, we further conclude that all carriers must have equal and open access to all regionally-deployed databases containing number portability-specific data. Allowing particular carriers access to the databases over others would be inherently discriminatory and anti-competitive. All carriers providing number portability need to have access to all relevant information to be able to provide customers with this important capability. We thus conclude that the 1996 Act, in addition to general rules of equity and competitive neutrality, requires equal and open access to all regionally-deployed databases for all carriers wishing to interconnect.

99. We believe that, at this time, the information contained in the number portability regional databases should be limited to the information necessary to route telephone calls to the appropriate service providers. The NANC should determine the specific information necessary to provide number portability. To include, for example, the information necessary to provide E911 services or proprietary customer-specific information would complicate the functions of the number portability databases and impose requirements that may have varied impacts on different localities. For instance, because different localities have adopted different emergency response systems, the regional databases would have to be configured in such a fashion as to provision the appropriate emergency information to each locality's particular system. Similarly, special systems would need to be developed to restrict access to proprietary customer-specific information. In either instance, the necessary programming to add such capabilities to the regional databases would complicate the functionality of those databases.

100. Because we require open access to the regional databases, it would be inequitable to require carriers to disseminate, by means of those databases, proprietary or customer-specific information. We therefore contemplate that the regional

deployment of databases will permit individual carriers to own and operate their own downstream databases. These carrier-specific databases will allow individual carriers to provide number portability in conjunction with other functions and services. To the extent that individual carriers wish to mix information, proprietary or otherwise, necessary to provide other services or functions with the number portability data, they are free to do so at their downstream databases. We reiterate, however, that a carrier may not withhold any information necessary to provide number portability on the grounds that such data are combined with other information in its downstream database; it must furnish all information necessary to provide number portability to the regional databases as well as to its own downstream database.

101. Carriers that choose not to access directly the regional databases or deploy their own downstream databases can seek access to the carrier-specific databases deployed by other carriers. The provision of access to network elements and facilities of incumbent LECs is addressed in our proceeding implementing section 251 of the Communications Act. We believe the issue of access to incumbent LECs' carrier-specific databases by other carriers for purposes of number portability is best addressed in that proceeding. Parties may negotiate third-party access to non-incumbent LECs' carrier-specific databases on an individual basis.

102. In the *Numbering Plan Order,* we concluded that the Commission should invoke its statutory authority to recover its costs for regulating numbering activities, including costs incurred from the establishment, oversight of, and participation in the NANC. The Commission is required to institute a rulemaking proceeding annually to adjust the schedule of regulatory fees to reflect its performance of activities relating to enforcement, policy and rulemaking, user information services, and international activities, pursuant to the relevant appropriations legislation. Therefore, we intend to include the additional costs incurred by the Commission related to NANC and regulating number portability in the fiscal 1997 adjustment of the schedule of regulatory fees. In that proceeding, we will assess the nature and amount of the additional burdens imposed by the activities authorized here, and all interested parties will be afforded an opportunity to comment.

F. Currently Available Number Portability Measures

1. Background

103. In the NPRM, we discussed certain currently available number portability measures that LECs can use to provide service provider number portability. We focused on RCF and DID and acknowledged that the use of either method for number portability has significant limitations. We sought comment on the costs of implementing these measures, and on their limitations and disadvantages. We also requested that parties discuss whether these currently available measures can be improved so that they are workable, long-term solutions, and if so, at what cost. Finally, we sought comment on how the costs of providing service provider portability using RCF and DID should be recovered.

2. Implementation of Currently Available Number Portability Measures

a. Positions of the Parties

104. Commenting parties, with the exception of several of the incumbent LECs, generally agree that the technical limitations described in the NPRM render the interim measures unacceptable in the long term. Indeed, many parties point out additional disadvantages of RCF and DID, such as: Longer call set-up times, incumbent access to competitors' proprietary information, complicated resolution of customer complaints, increased potential for call blocking, and substantial costs to new entrants. Bell Atlantic counters that calls forwarded by RCF in its network can support CLASS features if the co-carrier has modern digital switching equipment and common channel signalling, and it adds that there is no limit on the number of calls RCF can handle simultaneously.

105. Many of the new entrants, nevertheless, urge the Commission to require incumbent LECs to provide interim measures until a long-term solution is implemented. These carriers generally caution that use of interim solutions should not delay implementation of a permanent solution. While acknowledging that RCF and DID are already technically feasible and generally available, several LECs argue that the Commission need not take action on interim measures. They generally focus, instead, on phasing in a long-term solution.

106. AT&T and MCI initially argued for using a medium-term database solution, namely, the Carrier Portability Code (CPC) method, because of its advantages over RCF or DID, but subsequently favored implementing LRN as soon as possible. NYNEX and SBC Communications claim that adopting CPC as an interim solution would result in wasted and duplicative efforts. They note that CPC fails to support certain services, such as ISDN calls, pay phone calls, and CLASS features when customers place a call into an NXX from which a number has been transferred to a different service provider, and that CPC may prevent an operator from identifying the switch serving a ''ported'' number, thereby interfering with busy line verification of that line.

107. Potential new entrants into the local exchange market generally contend that requiring interim number portability is consistent with the 1996 Act. Indeed, MFS maintains that the 1996 Act requires immediate implementation of interim measures until long-term portability is implemented. Teleport notes that the Bell Operating Companies, at least, are required to provide interim number portability as a condition of entry into the interLATA market. MCI agrees that interim measures should be made available until long-term portability is implemented, and argues that section 4(i) of the Communications Act authorizes the Commission to perform any acts ''necessary and proper'' to execute section 251(b)(2), and that such authority is pre-existing and remains in effect. ALTS contends that Congress clearly contemplated that the Commission should require interim measures until long-term portability is available because otherwise BOCs could satisfy the competitive checklist of section 271(c)(2)(B)(xi) for entry in interLATA services without providing any form of number portability. AT&T argues that interim arrangements are incapable of preserving the functionality for long-term number portability required by the 1996 Act, but should be provided until long-term number portability can be deployed.

108. US West, in contrast, asserts that the Commission's jurisdiction over interim measures is unclear because sections 153(30) and 251(b)(2), giving the Commission jurisdiction over number portability, appear to include only permanent portability. Cox and NCTA claim that the interim measures do not satisfy the ''without impairment of quality, reliability, or convenience'' standard in the definition of number portability in 47 U.S.C. section 153(30).

109. Several of the cable interests argue that, although section 271(c)(2)(B)(xi) allows the BOCs initially to satisfy the competitive

checklist for entry into interLATA services by providing only interim measures, the BOCs are also required to provide long-term portability to fulfill the checklist requirements. Moreover, Cox and Time Warner Holdings warn that the Commission will lose its leverage to encourage prompt implementation of long-term portability once the BOCs are permitted to provide in-region interLATA services pursuant to section 271. NCTA asserts that, since section 271(c)(2)(B)(xi) distinguishes between ''interim'' measures and ''regulations pursuant to section 251 to require number portability,'' the portability required by section 251 is long-term number portability. CCTA urges the Commission to review and require BOC progress toward deployment of a long-term method when BOCs apply for in-region interLATA market entry, and to deny a BOC application if the BOC tries to delay implementation of long-term portability. Cox goes further and argues that, after the Commission adopts number portability rules, BOCs must implement long-term service provider portability, not just interim measures, before they can obtain interexchange and manufacturing relief under section 271 because interim measures do not satisfy section 251. In response, Ameritech contends that provision of interim measures, and later compliance with the Commission's portability rules, satisfies the BOC checklist and notes that section 271(d)(4) directs the Commission not to limit or extend the checklist terms.

b. Discussion

110. The 1996 Act requires that carriers ''provide, to the extent technically feasible, number portability in accordance with the requirements prescribed by the Commission.'' Number portability is defined in the 1996 Act as ''the ability of users of telecommunications services to retain, at the same location, existing telecommunications numbers without impairment of quality, reliability, or convenience when switching from one telecommunications carrier to another.'' The record indicates that currently technically feasible methods of providing number portability, such as RCF and DID, may impair to some degree either the quality, reliability, or convenience of telecommunications services when customers switch between carriers. Because of these drawbacks, some may argue that the use of RCF and DID methods for providing number portability would not satisfy the requirements of sections 3(30) and 251(b)(2). We disagree. Section 251(b)(2) specifically requires carriers to provide number portability, as defined in section 3(30), ''to the extent technically feasible.'' Thus, because currently RCF and DID are the only methods technically feasible, we believe that use of these methods, in fact, comports with the requirements of the statute. We believe that the 1996 Act contemplates a dynamic, not static, definition of technically feasible number portability methods. Under this view, LECs are required to offer number portability through RCF, DID, and other comparable methods because they are the only methods that currently are technically feasible. LECs are required by this Order to begin the deployment of a long-term number portability solution by October 1, 1997, because, based on the evidence of record, such methods will be technically feasible by that date. We believe that this conclusion is consistent with Congress's goal of developing a national number portability framework, as well as the general purpose of the Act to ''promote competition * * * in order to secure lower prices and higher quality services for American telecommunications consumers and encourage the rapid deployment of new technologies.''

111. This interpretation finds further support in section 271(c)(2)(B)(xi), which sets forth the competitive checklist for BOC entry into in-region interLATA services. That section requires the BOCs wishing to enter the in-region interLATA market: (1) To provide interim number portability through RCF, DID, and other comparable arrangements ''until the date by which the Commission issues regulations pursuant to section 251 to require number portability,'' and then (2) to comply with the Commission's regulations. There will necessarily be a significant time period between the adoption date of these rules and the availability of long-term number portability measures. Therefore, were the Commission to promulgate rules providing only for the provision of long-term number portability, during this time period the BOCs could satisfy the competitive checklist without providing any form of number portability. This could be true even if they had been providing interim number portability pursuant to the checklist prior to the effective date of the Commission's regulations. We do not believe that Congress could have intended this result. We, therefore, agree with MFS, ALTS, MCI, and AT&T that Congress intended that currently available number portability measures be provided until a long-term number portability method is technically feasible and available.

112. We conclude that we had authority to require the provision of currently available methods of service provider portability prior to passage of the 1996 Act. In the NPRM, we tentatively concluded that sections 1 and 202 of the Communications Act establish a federal interest in the provision of number portability. Specifically, we concluded in the NPRM that such interest arises from: (1) Our obligation to promote an efficient and fair telecommunications system; (2) the inability to separate the impact of number portability between intrastate and interstate telecommunications; (3) the potential adverse impact deploying different number portability solutions across the country would have on the provision of interstate telecommunications services; and (4) the impact number portability could have on the use of the numbering resource, that is, ensuring that the use of numbers is efficient and does not contribute to area code exhaust. We now affirm these tentative conclusions and conclude that we have jurisdiction to require the provision of currently available number portability methods, independent of the statutory changes adopted in the 1996 Act.

113. There are also substantial policy reasons that support our requiring LECs to provide currently available number portability measures. The ability of customers to keep their telephone numbers when changing carriers, even with some impairment in call set-up time or vertical service offerings, is critical to opening the local marketplace to competition. By facilitating entry of new carriers into the local market, currently available number portability measures will increase competition in local markets which will result in lower prices and higher service quality for telecommunications services consistent with the goals of the 1996 Act. Several parties to this proceeding likewise advocate that such measures are necessary for the development of effective local exchange competition.

114. We note that sections 251(b)(2) and 251(d) give to the Commission the authority to prescribe requirements for the provision of number portability. Pursuant to that authority, we mandate the provision of currently available number portability measures as soon as reasonably possible upon receipt of a specific request from another telecommunications carrier, including from wireless service providers. By conditioning the obligation to provide currently available number portability measures upon a specific request,

number portability will be offered only in those areas where a competing local exchange carrier seeks to provide service. Thus, it avoids the imposition of number portability implementation costs on carriers (and end users) in areas where no competitor is operating.

115. We agree with the many parties who claim that the technical limitations described in the NPRM that handicap all currently available measures for providing number portability render them unacceptable as long-term solutions. Despite Bell Atlantic's claims to the contrary for its own network, the record indicates that currently available number portability measures are inferior to LRN portability or any other method that meets our performance criteria. The 1996 Act, and particularly the BOC checklist in section 271, clearly contemplates that these methods should serve as only temporary measures until long-term number portability is implemented. As indicated above, the 1996 Act requires that number portability be provided, to the extent technically feasible, without impairment of quality, reliability, and convenience. Therefore, when a number portability method that better satisfies the requirements of section 251(b)(2) than currently available measures becomes technically feasible, LECs must provide number portability by means of such method. In addition, we find that the existing measures fail to satisfy our criteria set forth for any long-term solution; for example, they depend on the original service provider's network, may result in the degradation of service quality, and are wasteful of the numbering resource. For these reasons, we do not believe that long-term use of the currently available measures is in the public interest. We emphasize that we encourage all LECs to implement a long-term solution that meets our technical standards as soon as possible. We also note that BOCs must comply with the requirements set forth in this Order, including the requirement to provide currently available measures, in order to satisfy the BOC competitive checklist. Upon the date on which long-term portability must be implemented according to our deployment schedule, BOCs must provide long-term number portability and will be subject to an enforcement action under section 271(d)(6) if they fail to do so.

116. We decline to require a ''medium-term'' or short-term database solution such as CPC. The increased costs of implementing this approach are unwarranted given the imminent implementation of a long-term solution that meets our criteria. In addition, devoting resources to implement a medium-term database solution, which is currently not available, may delay implementation of a long-term database solution. We note that the Colorado, Georgia, Illinois, and Ohio state commissions have declined to adopt, and the California and Maryland task forces have declined to recommend, CPC as an interim solution, while the emphasis on New York's CPC trial has shifted in favor of concentrating on the adoption of LRN. We also note that several parties originally advocating CPC have since retreated from that view and now instead support implementing a long-term database solution as soon as possible. To the extent carriers wish to provide a medium-term database solution, such as CPC, however, we do not prevent them from doing so.

3. Cost Recovery for Currently Available Number Portability Measures

a. Positions of the Parties

117. In comments filed before passage of the 1996 Act, Cablevision Lightpath argues that all carriers should pay incremental, cost-based rates for interim measures and suggests, as an example, an annual surcharge based on the product of the incremental cost of switching and minutes of traffic forwarded. AT&T and MCI agree with Cablevision Lightpath and endorse the formula used by the New York Department of Public Service, which allocates the costs of providing interim measures across all carriers based on the product of switching and transport costs, and minutes of forwarded traffic. Cablevision Lightpath urges, however, the Commission to ban incumbent LECs from treating the costs of currently available number portability as exogenous adjustments to their interstate price cap indices. GSA, Jones Intercable, and the Users Committee point out that the short-term incremental costs of providing interim measures are low.

118. Many of the new entrants advocate placing much of the burden of cost-recovery for interim measures on the incumbent LECs. Jones Intercable, along with several other cable interests, argues that the incumbent LECs and new LECs should recover the costs of interim measures under a ''bill and keep'' system, under which incumbent LECs and new entrants would not charge each other for interim number portability arrangements that require them to forward calls of customers who have changed service providers. In the alternative, Jones Intercable contends that incumbent LECs' charges for interim number portability services should be equal to or less than the LECs' incremental cost of providing those services. Teleport also supports the provision of interim portability measures with no intercarrier usage charges.

119. Several commenters propose large discounts comparable to those mandated for non-equal access during the transition to equal access. Competitive Carriers assert that allowing LECs to charge retail prices would discourage provision of long-term number portability. MCI argues that portability is a network function, not a service, and proposes that all local carriers share the costs or at least that incumbent LECs not be allowed to recover more than the incremental costs. AT&T and MFS argue that any interim measures should be provided at rates that encourage incumbents to offer the most efficient routing available, or reflect these measures' inferior quality and true costs. ALTS and MFS further argue that competitive local exchange carriers should be entitled to retain all terminating access charges. Similarly, MCI and NCTA argue that the terminating access charges paid by IXCs should be shared with the competitor that actually completes calls forwarded to it.

120. AT&T and MCI argue that the 1996 Act requires that the costs of providing interim number portability measures be borne by all telecommunications carriers on a competitively neutral basis. MFS argues that interim measures should be provided at no cost or in the alternative, allocated on revenues net of payments to intermediaries. Several LECs, in contrast, claim that the competitively neutral standard prohibits requiring incumbent LECs to subsidize their competitors by providing interim measures for free or at deeply discounted rates. Ameritech asserts that section 251(e)(2)'s ''competitively neutral'' standard for cost recovery does not apply to interim portability at all. It asserts that interim portability is addressed in section 271(c)(2)(B)(xi), and therefore the Commission is not authorized under the BOC checklist to eliminate or discount interim portability rates below levels that state commissions have already judged reasonable. Similarly, BellSouth argues that Congress's endorsement of interim RCF and DID arrangements in the BOC checklist, and the 1996 Act's structure of requiring state-approved carrier negotiations for interconnection agreements, compel the conclusion that RCF and DID cost recovery issues be left to the states.

b. Discussion

121. In light of our statutory mandate that local exchange carriers provide number portability through RCF, DID, or other comparable arrangements until a long-term number portability approach is implemented, we must adopt cost recovery principles for currently available number portability that satisfy the 1996 Act. We emphasize that the cost recovery principles set forth below will apply only until a long-term number portability method can be deployed. As we have indicated, deployment of long-term number portability should begin no later than October 1997, so currently available number portability arrangements, and the associated cost recovery mechanism, should be in place for a relatively short period.

122. It is also important to recognize that the costs of currently available number portability are incurred in a substantially different fashion than the costs of long-term number portability arrangements. First, the capability to provide number portability through currently available methods, such as RCF and DID, already exists in most of today's networks, and no additional network upgrades are necessary. In contrast, long-term, or database, number portability methods require significant network upgrades, including installation of number portability-specific switch software, implementation of SS7 and IN or AIN capability, and the construction of multiple number portability databases. Second, the costs of providing number portability in the immediate term are incurred solely by the carrier providing the forwarding service. Long-term number portability, in contrast, will require all carriers to incur costs associated with the installation of number portability-specific software and the construction of the number portability databases. Those costs will have to be apportioned in some fashion among all carriers. Finally, we note that, initially, the costs of providing currently available number portability will be incurred primarily by the incumbent LEC network because most customers will be forwarding numbers from the incumbents to the new entrants.

123. Parties have advanced a wide range of methods for recovering the costs of currently available number portability measures, including arrangements whereby neither carrier charges the other for provision of such measures and incremental, cost-based pricing schemes. In addition, several states have adopted different cost recovery mechanisms. For example, in Florida, carriers have negotiated appropriate rates for currently available measures. The Louisiana PSC has adopted a two-tiered approach to pricing of currently available measures. In the first instance, carriers are permitted to negotiate an appropriate rate. If the parties cannot agree upon a rate, the PSC will determine the appropriate rate that can be charged by the forwarding carrier based on cost studies filed by the carriers. These rates are not required to be set at long-run incremental costs (LRIC) or total service long-run incremental costs (TSLRIC), however.

124. In addition, incumbents and new entrants have voluntarily negotiated a variety of cost recovery methods. Carriers in Rochester, New York, for example, are voluntarily using a formula that allocates the incremental costs of currently available number portability measures, through an annual surcharge assessed by the carrier from which the number is transferred. The charge assessed on each carrier is the product of the total number of forwarded minutes and the incremental per-minute costs of switching and transport, multiplied by the ratio of a particular carrier's forwarded telephone numbers relative to total working numbers in the area. In addition, Rochester Telephone has agreed not to charge competitors for the first $1 million of the cost of number portability. The New York DPS has adopted this formula for the New York Metropolitan area as well. Ameritech and MFS recently entered into an agreement for Ameritech's five-state region under which MFS will pay Ameritech $3 per line per month for interim measures. MFS plans to seek regulatory approval to allocate that cost under a formula that would require MFS to pay a portion of the $3 charge equal to the ratio of MFS's gross telecommunications service revenues, net of its payments to other carriers, to Ameritech's gross telecommunications revenues, net of payments to other carriers.

125. Our cost recovery principles for currently available methods, of course, must comply with the statutory requirements of the 1996 Act. In addition, consistent with the pro-competitive objectives of the 1996 Act, we seek to create incentives for LECs, both incumbents and new entrants, to implement long-term number portability at the earliest possible date, since, as we have noted, long-term number portability is clearly preferable to existing number portability methods. The principles we adopt should also mitigate any anti-competitive effects that may arise if a carrier falsely inflates the cost of currently available number portability.

126. In our interconnection proceeding, we have sought comment on our tentative conclusion that the 1996 Act authorizes us to set pricing principles to ensure that rates for interconnection, unbundled network elements, and collocation are just, reasonable, and nondiscriminatory. We need not, however, reach in this proceeding the issue of whether section 251 generally gives us authority over pricing for interconnection because the statute sets forth the standard for the recovery of number portability costs and grants the Commission the express authority to implement this standard. Specifically, section 251(e)(2) requires that the costs of ''number portability be borne by all telecommunications carriers on a competitively neutral basis as determined by the Commission.'' We therefore conclude that section 251(e)(2) gives us specific authority to prescribe pricing principles that ensure that the costs of number portability are allocated on a ''competitively neutral'' basis.

127. In exercising our authority under section 251(e)(2), we conclude that we should adopt guidelines that the states must follow in mandating cost recovery mechanisms for currently available number portability methods. To date, the state commissions have adopted different cost recovery methods. We seek to articulate general criteria that conform to the statutory requirements, but give the states some flexibility during this interim period to continue using a variety of approaches that are consistent with the statutory mandate. The states are also free, if they so choose, to require that tariffs for the provision of currently available number portability measures be filed by the carriers.

128. In establishing the standard for number portability cost recovery, section 251(e)(2) sets forth three specific elements, which we must interpret. First, we must determine the meaning of number portability ''costs;'' second, we must interpret the phrase ''all telecommunications carriers;'' and third, we must construe the meaning of the phrase ''competitively neutral.''

129. The costs of currently available number portability are the incremental costs incurred by a LEC to transfer numbers initially and subsequently forward calls to new service providers using existing RCF, DID, or other comparable measures. According to the record, the costs of RCF differ depending on where the call originates in a carrier's network. Calls that originate on the switch from which a number has been forwarded (intraoffice

calls) result in fewer costs than calls that originate from other switches (interoffice calls). This is because fewer transport and switching costs are incurred in the forwarding of an intraoffice call. The BOCs claim, for example, that there are essentially three costs incurred in the provision of RCF for an intraoffice call: (1) Switching costs incurred by the original switch in determining that the number is no longer resident; (2) switching costs incurred in performing the RCF translation, which identifies the address of the receiving switch; and (3) switching costs incurred in redirecting the call from the original switch to the switch to which the number has been forwarded. The BOCs further assert that the additional costs incurred for an interoffice call include: (1) The transport costs incurred in directing the call from the tandem or end office to the office from which the number was transferred and back to the tandem or end office; and (2) remote tandem or end office switching costs. There is conflicting evidence in the record on whether these costs are incurred on a per-minute, per-call, or some fixed basis. State commissions in some states have set cost-based rates for currently available number portability measures. In order to do so, states have used different methods of identifying costs, including LRIC, TSLRIC, and direct embedded cost studies. In California and Illinois, the state commissions set cost-based fixed monthly rates for RCF, while in New York and Maryland, the commissions set cost-based rates for minutes of use. In addition, there is some evidence in the record that carriers incur some non-recurring costs in the provision of currently available methods of number portability. Several states, such as California, Illinois, and Maryland, have permitted the carrier forwarding a number to recover such non-recurring costs as a one-time, non-recurring charge.

130. Section 251(e)(2) of the Communications Act requires that the costs of providing number portability be borne by ''all telecommunications carriers.'' No party commented on the meaning of the term ''all telecommunications carriers.'' Read literally, the statutory language ''all telecommunications carriers'' would appear to include any provider of telecommunications services. Section 3 of the Communications Act defines telecommunications services to mean ''the offering of telecommunications for a fee directly to the public, or to such classes of users as to be effectively available directly to the public, regardless of facilities used.'' Under this reading, states may require all telecommunications carriers—including incumbent LECs, new LECs, CMRS providers, and IXCs—to share the costs incurred in the provision of currently available number portability arrangements. As discussed in greater detail below, states may apportion the incremental costs of currently available measures among relevant carriers by using competitively neutral allocators, such as gross telecommunications revenues, number of lines, or number of active telephone numbers.

131. Section 251(e)(2) of the Act states that the costs of number portability are to be ''borne by all telecommunications carriers on a competitively neutral basis as determined by the Commission.'' We interpret ''on a competitively neutral basis'' to mean that the cost of number portability borne by each carrier does not affect significantly any carrier's ability to compete with other carriers for customers in the marketplace. Congress mandated the use of number portability so that customers could change carriers with as little difficulty as possible. Our interpretation of ''borne * * * on a competitively neutral basis'' reflects the belief that Congress's intent should not be thwarted by a cost recovery mechanism that makes it economically infeasible for some carriers to utilize number portability when competing for customers served by other carriers. Ordinarily the Commission follows cost causation principles, under which the purchaser of a service would be required to pay at least the incremental cost incurred in providing that service. With respect to number portability, Congress has directed that we depart from cost causation principles if necessary in order to adopt a ''competitively neutral'' standard, because number portability is a network function that is required for a carrier to compete with the carrier that is already serving a customer. Depending on the technology used, to price number portability on a cost causative basis could defeat the purpose for which it was mandated. We emphasize, however, that this statutory mandate constitutes a rare exception to the general principle, long recognized by the Commission, that the cost-causer should pay for the costs that he or she incurs.

132. Our interpretation suggests that a ''competitively neutral'' cost recovery mechanism should satisfy the following two criteria. First, a ''competitively neutral'' cost recovery mechanism should not give one service provider an appreciable, incremental cost advantage over another service provider, when competing for a specific subscriber. In other words, the recovery mechanism should not have a disparate effect on the incremental costs of competing carriers seeking to serve the same customer. The cost of number portability borne by a facilities-based new entrant that wins a customer away from an incumbent LEC is the payment that the new entrant must make to the incumbent LEC. The higher this payment, the higher the price the new entrant must charge to a customer to serve that customer profitably, which will put the new entrant at a competitive disadvantage. We thus interpret our first criterion as meaning that the incremental payment made by a new entrant for winning a customer that ports his number cannot put the new entrant at an appreciable cost disadvantage relative to any other carrier that could serve that customer.

133. An example illustrates the application of this criteria. When a facilities-based carrier that competes against an incumbent LEC for a customer, the incumbent LEC incurs no cost of number portability if it retains the customer. If the facilities-based carrier wins the customer, an incremental cost of number portability is generated. The share of this incremental cost borne by the new entrant that wins the customer cannot be so high as to put it at an appreciable cost disadvantage relative to the cost the incumbent LEC would incur if it retained the customer. Thus, the incremental payment by the new entrant if it wins a customer would have to be close to zero, to approximate the incremental number portability cost borne by the incumbent LEC if it retains the customer.

134. A couple of additional examples may further clarify and illustrate this criterion. On the one hand, a cost recovery mechanism that imposes the entire incremental cost of currently available number portability on a facilities-based new entrant would violate this criterion. This cost recovery mechanism would impose an incremental cost on a facilities-based entrant that neither the incumbent, nor an entrant that merely resold the incumbent's service, would have to bear, because neither the incumbent nor the reseller would have to use currently available number portability measures in order for the prospective customer to keep his or her existing number. On the other hand, a cost recovery mechanism that recovers the cost of currently available number portability through a uniform assessment on the revenues of all telecommunications carriers, less any charges paid to other carriers, would satisfy this criterion. This approach does not disparately affect the

incremental cost of winning a specific customer or group of customers, because a LEC with a small share of the market's revenue would pay a percentage of the incremental cost of number portability that will be small enough to have no appreciable affect on the new entrant's ability to compete for that customer.

135. The second criterion for a ''competitively neutral'' cost recovery mechanism is that it should not have a disparate effect on the ability of competing service providers to earn normal returns on their investment. If, for example, the total costs of currently available number portability are to be divided equally among four competing local exchange carriers, including both the incumbent LEC and three new entrants, within a specific service area, the new entrant's share of the cost may be so large, relative to its expected profits, that the entrant would decide not to enter the market. In contrast, recovering the costs of currently available number portability from all carriers based on each local exchange carrier's relative number of active telephone numbers would not violate this criterion, since the amount to be recovered from each carrier would increase with the carrier's size, measured in terms of active telephone numbers or some other measure of carrier size. In addition, allocating currently available number portability costs based on active telephone numbers results in approximately equal per-customer costs to each carrier. We also believe that assessing costs on a per-telephone number basis should give no carrier an advantage, relative to its competitors. An alternative mechanism that would also satisfy our competitive neutrality requirement would be to recover currently available number portability costs from all carriers, including local exchange, interexchange, and CMRS carriers, based on their relative number of presubscribed customers.

136. We conclude that a variety of approaches currently in use today essentially comply with our competitive neutrality criteria. One example is the formula voluntarily being used by carriers in Rochester, NY, and adopted by the NY DPS in the New York metropolitan area. Specifically, this mechanism allocates the incremental costs of currently available number portability measures, through an annual surcharge assessed by the incumbent LEC from which the number is transferred. This surcharge is based on each carrier's number of ported telephone numbers relative to the total number of active telephone numbers in the local service area. Similarly, as noted above, a cost recovery mechanism that allocates number portability costs based on a carrier's number of active telephone numbers (or lines) relative to the total number of active telephone numbers (or lines) in a service area would also satisfy the two criteria for competitive neutrality. As noted above, MFS in Illinois plans to seek regulatory approval for a similar formula that would allocate the costs of currently available measures between it and Ameritech based on each carrier's gross telecommunications revenues net of charges to other carriers. A third competitively neutral cost recovery mechanism would be to assess a uniform percentage assessment on a carrier's gross revenues less charges paid to other carriers. Finally, we believe that a mechanism that requires each carrier to pay for its own costs of currently available number portability measures would also be permissible.

137. The cost recovery mechanisms described in the preceding paragraphs define payments made by new entrants to incumbent LECs for providing number portability. We recognize that incumbent LECs must make payments to new entrants if the incumbent LEC wins a customer of the new entrant that wants to port its number. To be competitively neutral, the incumbent LEC would have a reciprocal compensation arrangement with each new entrant. That is, the incumbent LEC would pay to the new entrant a rate for number portability that was equal to the rate that the new entrant pays the incumbent LEC.

138. In contrast, requiring the new entrants to bear all of the costs, measured on the basis of incremental costs of currently available number portability methods, would not comply with the statutory requirements of section 251(e)(2). Imposing the full incremental cost of number portability solely on new entrants would contravene the statutory mandate that all carriers share the cost of number portability. Moreover, as discussed above, incremental cost-based charges would not meet the first criterion for ''competitive neutrality'' because a new facilities-based carrier would be placed at an appreciable, incremental cost disadvantage relative to another service provider, when competing for the same customer. Rates for interim number portability would also not meet the second criterion if they approximate the retail price of local service. New entrants may effectively be precluded from entering the local exchange market if they are required to bear all the costs of currently available number portability measures. Retail rates for call forwarding, to the extent they are set above incremental costs, would also not meet the principles of competitive neutrality for the same reasons that incremental cost-based rates would not. Finally, placing the full cost burden of number portability on new entrants would also deter customers of incumbent carriers from transferring to a new service provider to the extent that the entrant passes on the cost of currently available number portability, in the form of higher prices for customers. In addition, if incumbent LECs were not required to bear a portion of the incremental costs of currently available number portability measures, they would have an incentive to delay implementation of a long-term number portability method.

139. A carrier has a number of options for seeking relief if it believes that the pricing provisions for number portability offered by a LEC violate the statutory standard in section 251(e)(2), the rules we set forth in this order, or state-mandated cost recovery mechanisms. First, it may bring action against the carrier in federal district court pursuant to section 207 for damages or file a section 208 complaint against another carrier alleging a violation of the Act or the Commission's rules. Alternatively, the carrier may file a request for declaratory ruling with the Commission, seeking our view on whether the statute and our rules have been properly applied. Finally, carriers in many instances will be able to pursue existing avenues before their state commission if a dispute arises regarding recovery of currently available number portability costs.

140. Finally, in response to questions concerning the appropriate treatment of terminating access charges in the interim number portability context, we conclude that the meet-point billing arrangements between neighboring incumbent LECs provide the appropriate model for the proper access billing arrangement for interim number portability. We decline to require that all of the terminating interstate access charges paid by IXCs on calls forwarded as a result of RCF or other comparable number portability measures be paid to the competing local service provider. On the other hand, we believe that to permit incumbent LECs to retain all terminating access charges would be equally inappropriate. Neither the forwarding carrier, nor the terminating carrier, provides all the facilities when a call is ported to the other carrier. Therefore, we direct forwarding carriers and terminating carriers to assess on IXCs charges for terminating access through meet-point billing

arrangements. The overarching principle is that the carriers are to share in the access revenues received for a ported call. It is up to the carriers whether they each issue a bill for access on a ported call, or whether one of them issues a bill to the IXCs covering all of the transferred calls and shares the correct portion of the revenues with the other carriers involved. If the terminating carrier is unable to identify the particular IXC carrying a forwarded call for purposes of assessing access charges, the forwarding carrier shall provide the terminating carrier with the necessary information to permit the terminating carrier to issue a bill. This may include sharing percentage interstate usage (PIU) data and may require the terminating entity to issue a bill based on allocated interstate minutes per IXC as derived from data provided by the forwarding carrier.

G. Number Portability by CMRS Providers

1. Background

141. In our NPRM, we sought comment and other information on the competitive significance of service provider portability for the development of competition between CMRS and wireline service providers. We also sought comment on the current, and estimated future, demand of commercial mobile radio service customers for portable wireless telephone numbers when they change their service provider either to another CMRS provider or to a wireline service provider. Finally, we sought comment on whether the burdens of implementing service provider portability (1) between CMRS carriers, and (2) between CMRS and wireline carriers are similar to the burdens of implementing service provider portability between wireline carriers.

2. Position of the Parties

142. Parties commenting on CMRS issues generally fall into three groups. One group consists of the providers of Personal Communications Services (PCS). The PCS providers are just beginning to build advanced wireless networks to enter the market. Their successful market entry depends largely upon convincing consumers of other commercial mobile radio services, *e.g.*, cellular, to switch to PCS. The PCS providers therefore want number portability to be implemented as soon as technically possible. A second group is composed primarily of cellular providers, along with paging and messaging service providers. Parties in this category are generally incumbent service providers with relatively less sophisticated systems. These parties generally claim that number portability is unnecessary in the CMRS marketplace and oppose being required to upgrade their networks for such capabilities at allegedly great expense. A third group includes parties, such as Ameritech and AT&T Wireless, that support implementation of number portability by CMRS providers, but on a later deployment schedule than wireline portability so as to allow time for technical issues specific to CMRS to be resolved.

143. *Authority to Require CMRS Providers To Provide Number Portability.* SBC Communications argues that CMRS providers have no obligation to provide number portability under the 1996 Act, since the 1996 Act imposes that duty only on LECs, and the definition of LEC specifically excludes CMRS providers. As a result, SBC Communications claims, the Commission should examine CMRS portability separately from wireline portability. Similarly, Bell Atlantic NYNEX Mobile, Arch/AirTouch Paging, and MobileMedia argue that the 1996 Act and its legislative history demonstrate that the number portability obligation of section 251(b)(2) was not intended to apply to CMRS providers. BellSouth further argues that CMRS providers should not be required to offer portability until they compete directly with a LEC. Moreover, Bell Atlantic NYNEX Mobile asserts that section 332 of the Communications Act only subjects CMRS providers to limited regulation, where there is a ''clear cut need'' for doing so.

144. *Importance of Number Portability to CMRS Providers.* Most PCS providers maintain that number portability is important in the CMRS industry because it will promote competition between different types of CMRS providers. PCIA supports long-term number portability solutions for broadband PCS systems when they are technically feasible, and urges the Commission to set a consistent long-term nationwide policy for number portability. Omnipoint, a winner of several licenses in the broadband PCS C Block auction, explains that the success of PCS entry depends on whether PCS providers can attract a significant share of embedded cellular customers.

145. PCIA maintains that number portability is of considerable competitive importance to the broadband CMRS market because the advantages of portability will be a significant factor in consumers' decisions to change providers even though they must endure the inconvenience of changing equipment to do so. PCS Primeco claims that arguments made by incumbent cellular companies that downplay the importance of CMRS number portability are based on the fact that current cellular subscribers usually do not make their numbers widely known because, under existing cellular pricing plans, subscribers typically pay for both inbound and outbound calls. PCS Primeco contends that, since cellular and other CMRS customers do not distribute their numbers widely, such customers currently may not regard number portability as an important factor in deciding whether to switch CMRS providers. PCS Primeco asserts that in the future, as CMRS providers compete to become a substitute for wireline service, they will not assess charges on inbound calls, and CMRS customers will assign the same importance to number portability as wireline subscribers do today. PCIA argues similarly that portability will facilitate the convergence of and competition between CMRS and wireline services, which will likely result in cellular customers publishing their telephone numbers. PCIA adds that the ability to transfer telephone numbers between wireline and CMRS carriers ameliorates ''number exhaustion'' concerns. The Illinois Commerce Commission also considers number portability between wireline and CMRS providers important.

146. CTIA maintains that the CMRS industry supports the goal of full number portability for all telecommunications providers, including CMRS providers, but claims that the Commission should not delay implementation of service provider portability in the wireline networks while awaiting network solutions for CMRS carriers. Most of the commenting cellular providers believe that number portability is not as important to CMRS providers as it is to wireline service providers because there is little current demand for CMRS number portability and because of the unique technical problems involved. AT&T asserts that, while number portability is more important in the wireline market than the CMRS market, the Commission should not preclude such portability for CMRS carriers. Parties opposing CMRS portability generally argue that the benefits of CMRS portability are diminished by the following factors: (1) Substantial competition already exists in the CMRS market since CMRS customers already may choose from multiple competitive carriers; (2) CMRS customers place less value on their

numbers, as indicated by the fact that they do not publish them, do not often make them available through directory assistance, and more frequently change their telephone numbers due to competition and a variety of non-competitive reasons; (3) number portability would impair the ability of a carrier to identify immediately the validity of a customer's number and thereby prevent fraudulent use of numbers; (4) customers will have a disincentive to switch carriers because broadband PCS will require equipment that is not compatible with incumbent cellular equipment; (5) number portability would adversely affect roaming capabilities because cellular carriers rely on the ability to identify a roaming cellular customer's ''home carrier'' by the NPA/NXX; (6) service provider portability would require CMRS carriers to expand significantly the capacity of their roaming databases to provide additional information about each subscriber and his or her current service provider; and (7) CMRS uses different signalling protocols than wireline carriers, which will make implementation of number portability more difficult.

147. Paging providers similarly oppose being required to provide number portability. Arch/AirTouch Paging claims that the recent proliferation of new area codes, the introduction of a variety of competing services, and the availability of 800 and 888 numbers (and possibly of portable 500 and 900 numbers) have reduced in general the importance of number portability for all carriers. Arch/AirTouch Paging further argues against the imposition of number portability on CMRS providers because it believes competition will continue to develop without number portability. It maintains that various factors, such as price, service quality, coverage area, equipment functions, customer service, and enhanced service options can overcome the reluctance of customers to change carriers. PageNet argues that paging and messaging service providers should not be required to provide number portability because these services are already competitive, as no single carrier controls more than 12 percent of any paging market, and that markets, on average, have five competing carriers.

148. *Deployment of Long-Term Solutions by CMRS Carriers.* The PCS providers generally assert that CMRS providers will face technical burdens comparable to wireline carriers in updating their networks, and argue that there is no reason to treat CMRS providers differently from wireline carriers. Some CMRS parties indicate that it is technically possible to update cellular and PCS networks to accommodate long-term number portability. PCIA acknowledges that implementation of number portability by CMRS providers presents technical difficulties specific to CMRS, but argues that such difficulties can be overcome. PCIA asserts that most broadband carriers already plan to deploy the components necessary to implement LRN (*i.e.*, SS7 signaling, AIN/IN to do database queries and responses, and AIN triggers). Omnipoint contends that implementation deadlines for number portability should apply equally to wireless and wireline carriers, and proposes implementation in the top 100 MSAs between October 1997 and October 1998. Competitive Carriers argues that the Commission's number portability rules should be technology-neutral, and favors requiring implementation of number portability within 24 months of the issuance of our Order throughout the top 100 MSAs.

149. In contrast, several cellular interests claim that upgrading cellular networks to handle number portability will require greater time and effort than adapting wireline networks, primarily because relatively few cellular networks have IN or AIN capabilities, and because the current six-digit-based screening used to validate customer information and handle billing will have to be adapted to ten-digit-based screening. These parties claim that the necessary standards for functions such as ten-digit-based screening have yet to be developed.

150. Several parties caution that implementing number portability for CMRS providers will require more time than for wireline service providers because to date industry efforts aimed at developing number portability have focused on wireline carriers. For example, CMRS carriers did not participate in the Illinois number portability workshop and CMRS carriers generally have not participated in technical trials of number portability. PCIA estimates that it will be four to five years before CMRS networks are capable of implementing long-term number portability. Similarly, AT&T Wireless argues that CMRS carriers must follow a different implementation schedule than wireline.

151. *Interim Number Portability Measures.* Many of the CMRS carriers oppose requiring CMRS carriers to provide measures such as RCF and DID. PCIA and Arch/AirTouch Paging claim that requiring interim measures would divert resources from, and thus delay implementation of, a long-term method. The paging service providers, in particular, oppose interim measures as not cost-justified and unnecessary for the already competitive paging industry. According to PCIA, RCF and DID currently cannot be provided by mobile telephone switching offices and would be more problematic and expensive to deploy in a CMRS network than in a wireline network. For example, PCIA claims that RCF requires carriers to maintain a point of interconnection within each NPA in which it intends to provide such service, and that, currently, many broadband CMRS carriers' switches do not interconnect at all such points. In addition, PCIA asserts that most new broadband carriers are already planning to deploy the components necessary to implement a long-term database method as part of their initial network designs. Consequently, those new broadband carriers might have to spend as much or more to upgrade their networks to support interim measures as they would to upgrade to support a long-term database method. Because substantial resources would have to be devoted to modifying CMRS networks to support interim measures, and thus diverted away from modifying CMRS networks to support long-term number portability, requiring implementation of interim measures now might delay future implementation of the long-term method. Other CMRS carriers make claims of technical inefficiencies, but acknowledge that RCF and DID are technically possible for CMRS providers today.

3. Discussion

152. *Authority to Require CMRS Providers to Provide Number Portability.* Section 251(b) requires local exchange carriers to provide number portability to all telecommunications carriers, and thus to CMRS providers as well as wireline service providers. The statute, however, explicitly excludes commercial mobile service providers from the definition of local exchange carrier, and therefore from the section 251(b) obligation to provide number portability, unless the Commission concludes that they should be included in the definition of local exchange carrier. Our recent NPRM on interconnection issues raised by the 1996 Act seeks comment on whether, and to what extent, CMRS providers should be classified as LECs. Because we conclude that we have independent bases of jurisdiction over commercial mobile service providers, we need not decide here whether CMRS providers must provide number portability as

local exchange carriers under section 251(b).

153. We possess independent authority under sections 1, 2, 4(i), and 332 of the Communications Act of 1934, as amended, to require CMRS providers to provide number portability as we deem appropriate. Ensuring that the portability of telephone numbers within the United States is handled efficiently and fairly is within our jurisdiction under these other provisions of the Communications Act. Sections 2 and 332(c)(1) of the Act give the Commission authority to regulate commercial mobile service providers as common carriers, except for the provisions of Title II that we specify are inapplicable. Section 1 of the Act requires the Commission to make available to all people of the United States ''a rapid, efficient, Nation-wide, and world-wide wire and radio communication service.'' The Commission's interest in number portability is bolstered by the potential deployment of different number portability solutions across the country, which would significantly impact the provision of interstate telecommunications services. Section 1 also creates a significant federal interest in the efficient and uniform treatment of numbering because such a system is essential to the efficient delivery of interstate and international telecommunications. Implementation of long-term service provider portability by CMRS carriers will have an impact on the efficient use and uniform administration of the numbering resource. Section 4(i) grants the Commission authority to ''perform any and all acts, make such rules and regulations, and issue such orders, not inconsistent with [the Communications Act of 1934, as amended], as may be necessary in the execution of its functions.'' We conclude that the public interest is served by requiring the provision of number portability by CMRS providers because number portability will promote competition between providers of local telephone services and thereby promote competition between providers of interstate access services.

154. Bell Atlantic NYNEX Mobile cites the *CT DPUC Petition* in support of its argument that the Commission can only regulate CMRS providers under section 332 to the extent clearly necessary, and that regulation of number portability is not clearly necessary in the CMRS market. We conclude, however, that the *CT DPUC Petition* does not limit our authority to require CMRS providers to provide number portability to other CMRS or wireline carriers because that proceeding did not address the Commission's authority to require CMRS providers to provide number portability. That proceeding related solely to state authority to regulate rates of CMRS providers. We believe that imposing number portability obligations on CMRS providers will foster increased competition in the CMRS marketplace, and furthers our CMRS regulatory policy of establishing moderate, symmetrical regulation of all services, and a preference for curing market imperfections by lowering barriers to entry in order to encourage competition.

155. *Importance of Number Portability to CMRS Providers.* We require cellular, broadband PCS, and covered specialized mobile radio (SMR) providers (as defined in the First Report and Order in CC Docket 94–54), which are the CMRS providers that are expected to compete in the local exchange market, to offer number portability. This mandate is in the public interest because it will promote competition among cellular, broadband PCS, and covered SMR carriers, as well as among CMRS and wireline providers. We therefore include those carriers in our mandate to provide long-term service provider portability, under the Commission-mandated performance criteria set forth above, pursuant to our authority under sections 1, 2, 4(i), and 332 of the Communications Act of 1934. This mandate applies when switching among wireline service providers and broadband CMRS providers, as well as among broadband CMRS providers, even if the broadband CMRS and wireline service providers or the two broadband CMRS providers are affiliated. We base this conclusion on our view, as discussed in the following paragraphs, that cellular, broadband PCS, and covered SMR providers will compete directly with one another, and potentially will compete in the future with wireline carriers.

156. We specifically exclude at this time paging and other messaging services, and the following CMRS providers as listed in part 20 of our rules: Private Paging, Business Radio Services, Land Mobile Systems on 220–222 MHz, Public Coast Stations, Public Land Mobile Service, 800 MHz Air-Ground Radio-Telephone Service, Offshore Radio Service, Mobile Satellite Services, Narrowband PCS Services. We do so because such services currently will have little competitive impact on competition between providers of wireless telephony service or between wireless and wireline carriers. Because local SMR licensees offering mainly dispatch services to specialized customers in a non-cellular system configuration do not compete substantially with cellular and broadband PCS providers, we also exclude them from the number portability requirements we adopt today. For similar reasons, we also specifically exclude at this time Local Multipoint Distribution Service (LMDS). If, however, any of these services begins to compete in the local exchange market, or if there are other public interest reasons to require them to provide number portability, we will reassess the exclusion of these services from the requirement to provide number portability.

157. Service provider portability between cellular, broadband PCS, and covered SMR providers is important because customers of those carriers, like customers of wireline providers, cannot now change carriers without also changing their telephone numbers. While we recognize that customers may need to purchase new equipment when switching among such CMRS providers, the inability of customers to keep their telephone numbers when switching carriers also hinders the successful entrance of new service providers into the cellular, broadband PCS, and SMR markets. We believe, therefore, that service provider portability, by eliminating one major disincentive to switch carriers, will ameliorate customers' disincentive to switch carriers if they must purchase new equipment. We believe service provider portability will promote competition between existing cellular carriers, as well as facilitate the viable entry of new providers of innovative service offerings, such as PCS and covered SMR providers.

158. With the recent and expected future entry of new PCS providers, and the growth of existing CMRS generally, we believe it important that service provider portability for cellular, broadband PCS, and covered SMR providers be made available so as to remove barriers to competition among such providers. Removing barriers, such as the requirement of changing telephone numbers when changing providers, will likely stimulate the development of new services and technologies, and create incentives for carriers to lower prices and costs. We find unpersuasive arguments that number portability is unimportant because the CMRS market is already substantially competitive since CMRS customers already may choose from multiple competitive carriers. Most CMRS customers today subscribe to cellular service because broadband PCS has been offered for a very short time,

SMR service has typically been used for communications among mobile units of the same business subscriber (e.g., taxi dispatch), and mobile satellite services have typically been used only in rural areas. The possibility of entry by new competitors can constrain monopolistic, or in this case, duopolistic, conduct by incumbent providers and thus serve the public interest by potentially lowering prices, improving service quality, and encouraging innovation. We note that while the cellular industry, with two facilities-based carriers offering service in each market area, is more competitive than traditional monopoly telephone markets, it is far from perfectly competitive. The United States Government Accounting Office, the Department of Justice, and the Commission have determined that only limited competition currently exists in the cellular market.

159. We conclude that number portability will facilitate the entry of new service providers, such as PCS and covered SMR providers, into CMRS markets currently dominated by cellular carriers, and thus provide incentives for incumbent cellular carriers to lower prices and increase service choice and quality. Indeed, we noted recently that competition from PCS, alone, is expected to reduce cellular prices by as much as 40 percent over the next two years. We believe that such pro-competitive effects will be enhanced by eliminating the need for customers to change telephone numbers when switching providers of cellular services, broadband PCS, and covered SMR services.

160. We further conclude that number portability will promote competition between CMRS and wireline service providers as CMRS providers offer comparable local exchange and fixed commercial mobile radio services. The Commission has recognized on several occasions that CMRS providers, such as broadband PCS and cellular, will compete in the local exchange marketplace. For example, the Commission permitted Southwestern Bell Mobile Systems, Inc. to own local exchange facilities outside of Southwestern Bell's service area in order to ''promote significant Commission objectives by encouraging local loop competition. The development of CMRS is one of several potential sources of competition that we have identified to bring market forces to bear on the existing LECs.'' The Commission also adopted an auction licensing mechanism to speed deployment of PCS and thereby ''create competition for existing wireline and wireless services.'' In addition, the Commission decided to permit foreign investment in Sprint Corporation based, in part, on a finding that a portion of that investment would be used to fund PCS competition with wireline local exchange providers in the U.S. market. Finally, in the *Fixed CMRS Notice* (61 FR 6189 (February 16, 1996)), the Commission tentatively concluded that PCS and cellular providers will provide fixed CMRS local loop services, and that such carriers will directly compete with traditional wireline local exchange carriers. We believe, for the reasons stated above, that service provider portability will encourage CMRS-wireline competition, creating incentives for carriers to reduce prices for telecommunications services and to invest in innovative technologies, and enhancing flexibility for users of telecommunications services.

161. We find unpersuasive commenters' arguments that number portability is not a competitive issue for CMRS providers because consumers are not interested in retaining their CMRS numbers. We recognize that currently customers of cellular, broadband PCS, and covered SMR providers may generally initiate more calls than they receive, and are reluctant to distribute their CMRS telephone numbers. We agree with the argument advanced by PCS Primeco that this reluctance generally is caused by the current cellular carrier pricing structures, under which customers pay for incoming calls, rather than lack of attachment to CMRS telephone numbers. Several parties have indicated that at least some CMRS providers intend to compete with wireline carriers in the local exchange market. To do so effectively, CMRS carriers are likely to change their pricing structures to resemble more closely wireline pricing structures. As broadband CMRS pricing structures are modified as a likely result of increased competition, and cellular, broadband PCS, and covered SMR become integrated and less functionally distinguishable from wireline services, customers may be more likely to make their CMRS telephone numbers known, and utilize numbering resources in a manner more comparable with that of the current wireline market. We, therefore, conclude that requiring number portability for cellular, broadband PCS, and covered SMR providers will enhance the development of competition among those providers and among CMRS and wireline service providers.

162. *Deployment of Long-Term Solutions by CMRS Carriers.* The record of this proceeding suggests that cellular, broadband PCS, and covered SMR providers will face burdens comparable to wireline carriers in modifying their networks to implement number portability, and that any technical issues that are unique to those carriers can be resolved. While a number of parties have raised CMRS-specific issues that must be resolved before CMRS carriers can effectively provide number portability, we conclude that the record demonstrates that none of these difficulties are insurmountable. Several parties claim that CMRS networks can be updated to accommodate long-term number portability. In addition, the report on number portability recently released by the INC indicates that broadband CMRS roaming systems, including mobile station registration and call delivery, switches, protocols, and wireline interconnection arrangements can be updated to accommodate number portability. PCIA asserts that most broadband carriers already plan to deploy the components necessary to implement LRN (*i.e.*, SS7 signaling, IN/AIN to do database queries and responses, and AIN triggers). Omnipoint argues that the cellular industry has failed to demonstrate why CMRS-specific technical issues cannot be worked out within the same time as wireline technical issues.

163. A number of commenters, however, also suggest that implementation of service provider portability for broadband CMRS would necessitate more time than deployment of wireline methods. For instance, several cellular interests claim that upgrading cellular networks to handle number portability will require greater time and effort than adapting wireline networks, primarily because relatively few cellular networks have IN or AIN capabilities, and because the current six-digit-based screening used to provide roaming, validate customer information, and handle billing will have to be adapted to ten-digit-based screening. These parties claim that the necessary standards for functions such as ten-digit-based screening have yet to be developed.

164. It appears that while the wireline industry has already developed many of the standards and protocols necessary for wireline carriers to provide number portability, the CMRS industry is only beginning to address the additional standards and protocols specific to the provision of portability by CMRS carriers. The technical requirements for broadband CMRS portability have been given comparatively little attention compared to those for wireline. Initial state efforts have generally not addressed CMRS issues; for example, the Illinois Number Portability

Workshop, which began studying wireline portability in April 1995, only plans to begin addressing CMRS portability in July 1996. Moreover, cellular, broadband PCS, and covered SMR providers face technical burdens unique to the provision of seamless roaming on their networks, and standards and protocols will have to be developed to overcome these difficulties. Therefore, based on the record, and the technical evidence presented both by the parties in this proceeding and the INC Report, we conclude that cellular, broadband PCS, and covered SMR providers should implement long-term service provider portability based on the following schedule.

165. We require all cellular, broadband PCS, and covered SMR carriers to have the capability of querying appropriate number portability database systems in order to deliver calls from their networks to ported numbers anywhere in the country by December 31, 1998, the date by which wireline carriers must complete implementation of number portability in the largest 100 MSAs. This schedule will ensure that cellular, broadband PCS, and covered SMR providers will have the ability to route calls from their customers to a wireline customer who has ported his or her number, by the time a substantial number of wireline customers have the ability to port their numbers between wireline carriers. This capability to access a database for routing information can be accomplished in either of two ways. First, the carrier may implement hardware and software upgrades (*e.g.*, IN/AIN capabilities) similar to those needed in wireline networks. Since these upgrades do not require development of the standards and protocols necessary to support roaming, we believe that cellular, broadband PCS, and covered SMR carriers should be able to complete these upgrades by the date by which wireline carriers must complete implementation of number portability in the largest 100 MSAs. Second, the carrier may make arrangements with other carriers that are capable of performing database queries. Cellular, broadband PCS, and covered SMR carriers operating in areas outside the largest 100 MSAs thus would need to make arrangements with other CMRS providers that have the capability to query databases, or with wireline carriers in the largest 100 MSAs, which will have completed deployment of number portability by December 31, 1998.

166. We require all cellular, broadband PCS, and covered SMR carriers to offer service provider portability throughout their networks, including the ability to support roaming, by June 30, 1999. The record indicates that additional time is needed to develop standards and protocols, such as ten-digit-based screening, to overcome the technical burdens unique to the provision of seamless roaming on cellular, broadband PCS, and covered SMR networks. Individual carriers, of course, may implement number portability sooner, and we expect that some carriers will do so based on individual technical, economic, and marketing considerations. We believe a nationwide implementation date for number portability for cellular, broadband PCS, and covered SMR providers is necessary to ensure that validation necessary for roaming can be maintained. We delegate authority to the Chief, Wireless Telecommunications Bureau, to establish reporting requirements in order to monitor the progress of cellular, broadband PCS, and covered SMR providers implementing number portability, and to direct such carriers to take any actions necessary to ensure compliance with this deployment schedule. We believe it necessary to establish reporting requirements for CMRS to ensure timely resolution of the standards issues unique to CMRS number portability, particularly roaming.

167. We recognize, however, that additional technical issues may arise as the industry begins to focus on provision of portability by CMRS carriers. We therefore delegate authority to the Chief, Wireless Telecommunications Bureau, to waive or stay any of the dates in the implementation schedule, as the Chief determines is necessary to ensure the efficient development of number portability, for a period not to exceed 9 months (*i.e.*, no later than September 30, 1999, for the first deadline, and no later than March 31, 2000, for the second deadline).

168. In the event a carrier is unable to meet our deadlines for implementing a long-term number portability solution, it may file with the Commission at least 60 days in advance of the deadline a petition to extend the time by which implementation in its network will be completed. We emphasize, however, that carriers are expected to meet the prescribed deadlines, and a carrier seeking relief must present extraordinary circumstances beyond its control in order to obtain an extension of time. Carriers seeking such relief must demonstrate through substantial, credible evidence the basis for its contention that it is unable to comply with our deployment schedule. Such requests must set forth: (1) The facts that demonstrate why the carrier is unable to meet our deployment schedule; (2) a detailed explanation of the activities that the carrier has undertaken to meet the implementation schedule prior to requesting an extension of time; (3) an identification of the particular switches for which the extension is requested; (4) the time within which the carrier will complete deployment in the affected switches; and (5) a proposed schedule with milestones for meeting the deployment date.

169. *Interim Number Portability Measures.* We do not require CMRS providers to provide RCF, DID, or comparable measures. Different treatment of CMRS and wireline carriers in this instance is justified by their differing circumstances. According to the record, RCF and DID currently cannot be provided by mobile telephone switching offices. Due to the different nature of CMRS networks and wireline networks, implementation of RCF or DID capability in a CMRS network appears far more problematic and expensive than in a wireline network. For example, PCIA claims that RCF requires carriers to maintain a point of interconnection within each NPA in which it intends to provide such service, and that currently, many broadband CMRS carriers' switches do not interconnect at all such points. Moreover, cellular roaming systems would have to be modified to account for the fact that, under RCF, a number different than the one dialed is used to route the call. As a result, alternative means will have to be developed to enable CMRS carriers to validate mobile subscribers who have roamed out of their service areas. Broadband carriers may also have to purchase new switches in order to provide RCF and DID. Moreover, most new broadband carriers are already planning to deploy the components necessary to implement a long-term database method as part of their initial network designs. Consequently, those new broadband carriers might have to spend as much or more to upgrade their networks to support interim measures as they would spend to upgrade to support a long-term database method, and requiring implementation of both might delay implementation of the long-term method. We also find it significant that, while the wireline parties advocating full portability generally support interim measures, the CMRS parties advocating full portability generally oppose interim measures.

170. We therefore conclude that it would be counterproductive to require

CMRS carriers to provide interim measures since they can provide long-term portability comporting with our standards just as quickly and less expensively. We believe that relieving cellular, broadband PCS, and covered SMR carriers of the burden of providing interim measures will allow them to devote their full resources toward implementing a long-term method and thus enhance their ability to provide long-term portability on the same schedule as wireline carriers. We note that CMRS carriers are, of course, free to provide interim number portability, if they choose to do so.

171. *Number Transferability.* A few parties raise the issue of number transferability, the ability of a reseller to transfer telephone numbers from one facilities-based carrier to another in order to permit the reseller's end user customers to retain their existing telephone numbers. Because the record does not establish any relationship between number transferability and number portability, and does not identify the technical issues involved in providing number transferability, we decline to address the provision of number transferability in this proceeding. We note that this issue has been raised in the *Second CMRS Interconnection NPRM* (60 FR 20949 (April 28, 1996)), and will be addressed in CC Docket No. 94–54.

H. *Service and Location Portability*

1. Background

172. While service provider portability refers to the ability of end users to retain the same telephone numbers as they change from one service provider to another, service portability refers to the ability of users of telecommunications services to retain existing telecommunications numbers without impairment of quality, reliability, or convenience when switching from one telecommunications service to another service provided by the same telecommunications carrier. We regard switching among wireline service providers and broadband CMRS providers, or among broadband CMRS providers, as changing service providers, not changing services, even if the broadband CMRS and wireline service providers or the two broadband CMRS providers are affiliated. We base this conclusion on our view that CMRS providers, such as cellular, broadband PCS, and covered SMR providers, compete directly with one another, and broadband CMRS providers potentially will compete in the future with wireline carriers.

173. Today, telephone subscribers must change their telephone number when they change telephone service (*e.g.,* from Plain Old Telephone Services (POTS) to Integrated Services Digital Network (ISDN)) because a particular service may be available only through a particular switch. In our NPRM, we sought comment on the demand for service portability and the extent to which a lack of service portability inhibits the growth of new services, such as ISDN. We requested information on the relative importance of service portability to the decisions of end users when considering whether to switch from one service to another. We also sought comment on what public interest objectives would be served by encouraging (or possibly mandating) implementation of service portability, and how the Commission could encourage service portability.

174. Location portability refers to the ability of users of telecommunications services to retain existing telecommunications numbers without impairment of quality, reliability, or convenience when moving from one physical location to another. Today, telephone subscribers must change their telephone numbers when they move outside the area served by their current central office. In our NPRM, we sought comment on the demand for location portability and the geographic area in which portability might be desired by consumers. We asked what federal policy objectives would be served by encouraging (or possibly mandating) implementation of location portability, and how such objectives could be attained. We sought comment on the potential impact that location portability for wireline telephone numbers and the development of the 500 personal communications services market, which permits customers to be reached through a single telephone number regardless of their location, may have on each other.

2. Position of the Parties

175. Most parties agree that location portability and service portability do not have the same potential impact on consumer choice and on the development of local competition as service provider portability. Pacific Bell and the Missouri PSC argue that the availability of service portability will be driven by market forces, and that product differentiation will stimulate customers to change their telecommunications services. Ameritech and SBC Communications note that since the 1996 Act addresses only service provider portability, the Commission should not adopt rules mandating service and location portability. OPASTCO claims that requiring service portability would strain the limited abilities of small LECs, and thus delay deployment of rural infrastructure. The Missouri PSC and New York DPS argue that there currently is not enough demand for ISDN to warrant requiring service portability. The Florida PSC, on the other hand, maintains that, in many cases, service portability is already available, as long as the switch has the needed functionality.

176. Most parties agree that implementation of location portability poses many problems, including: (1) Loss of geographic identity of one's telephone number; (2) lack of industry consensus as to the proper geographic scope of location portability; (3) substantial modification of billing systems and the consumer confusion regarding charges for calls; (4) loss of the ability to use 7-digit dialing schemes; (5) the need to restructure directory assistance and operator services; (6) coordination of number assignments for both customer and network identification; (7) network and switching modifications to handle a two-tiered numbering system; (8) development and implementation of systems to replace 1+ as toll identification; and (9) possible adverse impact on E911 services.

177. Several BOCs maintain that the Commission should require location portability immediately because currently new entrants can serve larger geographic areas with a single switch. Some of these parties maintain that the ability of competing carriers to serve larger geographic areas from a single wire center may increase consumer demand for location portability, thus giving competing carriers an advantage over incumbent LECs. MCI, SBC Communications, Nextel, and Arch/AirTouch Paging argue that, if location portability is implemented, it should be limited to the local calling area of a wireline carrier. MCI further maintains that allowing numbers to be transferred across NPA or state boundaries would negatively affect the numbering resource because individuals could remove numbers from the NPA by taking such numbers to other areas of the country. In contrast, GSA believes that the greater the geographic scope of location portability, the more meaningful the consumer benefits.

178. While many parties believe location portability has some value, most parties maintain that its implementation should not delay implementation of service provider portability. At the same time, numerous parties, including incumbents, new entrants, and state commissions, argue

that any number portability method adopted by the Commission should be capable of expanding to encompass location portability if such demand arises. GSA, Nortel, and Bell Atlantic argue that a long-term portability method should eventually encompass service and location portability. The National Emergency Numbering Association (NENA) contends the statutory definition of ''number portability'' in its broadest interpretation would limit any requirement to provide location portability to the area served by the same central office.

179. Pacific Bell and Time Warner Holdings argue that market forces should drive the development of location portability. Florida PSC, Missouri PSC, ACTA, Pacific Bell, BellSouth, and Sprint maintain that current market demand for location portability is mixed, and depends on such factors as the geographic scope of location portability and costs of implementation. GSA, on the other hand, claims that demand for location portability is reflected in the increase in demand for 800 services and by the demand for 500 services. A number of wireless parties argue that wireless carriers already provide significant location portability. Finally, the New York DPS maintains that location portability, if limited to a rate center, will avoid the problems of customer confusion, and that the 1996 Act does not prohibit provision of location portability within that limitation.

180. OPASTCO, SBC Communications, and Nextel argue that location portability should only be provided through use of non-geographic numbers, such as 500 services. GTE argues that its survey illustrates that customers are not adverse to a one-time number change to a non-geographic number in order to have number portability. Florida PSC maintains, however, that location portability and 500 services serve different purposes, with location portability providing the ability to take a phone number when a customer changes premises, and 500 services providing the ability to take a telephone number to different locations during the day, week, or month.

3. Discussion

181. We decline at this time to require LECs to provide either service or location portability. This decision is not inconsistent with the 1996 Act, which mandates the provision of service provider portability, but does not address explicitly service or location portability. The 1996 Act's requirement to provide number portability is limited to situations when users remain ''at the same location,'' and ''switch[ ] from one telecommunications carrier to another,'' and thus does not include service and location portability.

182. While the 1996 Act does not require LECs to offer service and location portability, it does not preclude this Commission from mandating provision of these features if it would be in the public interest, nor does it prevent carriers from providing service and location portability, consistent with this Order, if they so choose. We believe, however, that requiring service or location portability now would not be in the public interest. As the record indicates, service provider portability is critical to the development of competition, but service and location portability have not been demonstrated to be as important to the development of competition.

183. Consistent with the result advocated by most parties commenting on this issue, we believe that a mandate for service portability is unnecessary for several reasons. First, and most importantly, requiring carriers to make the necessary switch and network modifications to accommodate service portability as well as service provider portability may delay implementation of the latter. Second, consumer demand for service portability is unclear. The record indicates that the benefits of service portability are limited because the current unavailability of this capability affects only customers who wish to change their current service to Centrex and ISDN services or vice versa. Since most non-basic services offered by incumbent LECs are purchased in addition to (not in lieu of) basic services, implementation of service portability may actually lower demand for the alternate services if it raises their prices. Third, our requirement to provide service provider portability does not preclude carriers from offering service portability where they perceive a demand for it. In fact, our mandate will likely facilitate carriers' ability to provide service portability. Service provider portability will naturally drive the provision of service portability because if a user can receive a different service and keep the same number simply by switching carriers, service providers will have an incentive to offer service portability to keep those customers. Finally, carrier attempts to differentiate their products from those of other carriers will stimulate changes in services by customers, regardless of service portability.

184. We also believe that, at this time, the disadvantages of mandating location portability outweigh the benefits. Our chief concern is that users currently associate area codes with geographic areas and assume that the charges they incur will be in accordance with the calling rates to that area. Location portability would create consumer confusion and result in consumers inadvertently making, and being billed for, toll calls. Consumers would be forced to dial ten, rather than seven, digits to place local calls to locations beyond existing rate centers. In order to avoid this customer confusion, carriers, and ultimately consumers, would incur the additional costs of modifying carriers' billing systems, replacing 1+ as a toll indicator, and increasing the burden on directory, operator, and emergency services to accommodate 10-digit dialing and the loss of geographic identity.

185. In addition to the disadvantages, the demand for location portability is currently unclear. There is no consensus on the preferred geographic scope of location portability. Also, users who strongly desire location portability can use non-geographic numbers by subscribing to a 500 or toll free number. Finally, whereas having to change numbers deters users from switching service providers, we believe that a customer's decision to move to a new residential or business location generally would not be influenced significantly by the availability of number portability. Therefore, location portability will not foster the development of competition to the same extent as service provider portability.

186. We recognize that new entrants will be able to offer a greater range of location portability per switch due to their network architecture and because they will generally have fewer customers in the area covered by a switch. To avoid the consumer confusion and other disadvantages inherent in requiring location portability, however, we believe state regulatory bodies should determine, consistent with this Order, whether to require carriers to provide location portability. We believe the states should address this issue because we recognize that ''rate centers'' and local calling areas have been created by individual state commissions, and may vary from state to state. To the extent rate centers and/or local calling areas vary from state to state, the degree of location portability possible without causing consumer confusion may also vary. We therefore expect state regulatory bodies to consider the particular circumstances in their respective locales in determining whether to require carriers to implement location portability.

187. We recognize that location portability would promote consumer flexibility and mobility and potentially promote competition by allowing carriers to offer different levels of location portability in a competitive manner. Also, the importance that consumers attribute to the geographic identity of their telephone numbers may change, and our concerns regarding customer confusion may no longer hold true. For these reasons, we require any long-term method to have the capability of accommodating location and service portability if, in the future, demand increases or the burdens decrease.

I. 500 and 900 Number Portability

1. Background

188. Currently, consumers can purchase 500 or 900 services from either local exchange or interexchange carriers. A consumer subscribing to 500 service receives a 500 ''area code'' number that can be programmed to deliver calls wherever the consumer travels in the United States and in many locations around the world. 900 service is a calling service providing businesses with a method to deliver information, advice, or consultations quickly and conveniently by telephone. Individuals calling 500 or 900 subscribers dial 500 or 900 plus a 7-digit number (NXX–XXXX). When a call is placed to a 500 or 900 service telephone number, the originating LEC uses the NXX of the dialed number to identify the carrier serving either the owner of the 500 number, or the business operating the 900 number service. The LEC then routes the call over the appropriate carrier's network.

189. In the NPRM, we tentatively concluded that service provider portability for 500 and 900 numbers is beneficial for customers of those services. We sought comment on this tentative conclusion and on the costs (monetary and nonmonetary) of making such portability available. With respect to 500 service provider portability, we sought comment on the estimated costs of deploying and operating a database solution, and whether it would be technically feasible to upgrade the existing 800 database and associated software to accommodate PCS N00 numbers. We also sought comment on whether it is feasible (both technically and economically) to provide PCS N00 service provider portability in a switch-based translation environment. Further, we sought comment on the following issues raised by the Industry Numbering Committee's (INC's) PCS N00 report: (1) Who would be the owner/operator of an SMS administering a PCS N00 database; (2) how would that administrator be selected; (3) how would the costs of providing PCS N00 portability be recovered; and (4) by what date should PCS N00 portability be deployed. Finally, we sought comment on the ability of 900 number portability to lower prices and stimulate demand for 900 services, and on the costs of deploying and operating the necessary database.

2. Positions of the Parties

190. In comments filed prior to passage of the 1996 Act, a majority of parties argue that consideration of 500 and 900 number portability is premature, as the current costs of implementation outweigh any benefits. Indeed, several LECs maintain that the Commission should establish a separate docket to address the unique issues raised by 500 and 900 service provider portability.

191. In contrast, MCI, Citizens Utilities, Competitive Carriers, Florida Public Service Commission, and some CMRS providers contend that 500 and 900 number portability would benefit consumers, and that service provider portability for 500 and 900 numbers should be developed, as long as the costs are not prohibitive. The information service providers generally agree that 900 portability should be mandated by the Commission as soon as possible to increase competition for information service provider traffic among IXCs, and to offer a more efficient and broader range of information services.

192. Interactive Services, MCI, and Teleservices maintain that the toll free database can be modified to include 900 numbers at relatively modest cost, and that the implementation and administration of toll free number portability would provide a model for 500 and 900 number portability. Both Interactive Services and MCI note that parties have failed to provide relevant cost and benefit data in the record of this proceeding, and urge the Commission to require parties to submit data concerning the total costs of implementation and operation.

193. Ameritech states that updating the existing toll free platform to support 900 numbers is technically possible, but would require extensive systems modifications. Ameritech also states that it would be technically and economically infeasible to provide PCS N00 portability in a switch-based translation environment due to the memory capacity limitations and the operational issues associated with updating the routing tables. Bell Atlantic states that it may be technically feasible to upgrade the existing toll free database to accommodate 500 and 900 numbers, but this would require extensive system changes. NYNEX supports implementation of service provider portability for 500 numbers as proposed in the INC Report on PCS N00 Portability, which sets forth a four-year implementation schedule. USTA argues that 500 number portability can best be provided through a national, centralized database, similar to the toll free database, and notes that a 900 number portability solution may not be able to utilize the same platform as that contemplated for 500 number portability because of the differing structures of the services associated with 900 number services.

194. Only two parties addressed the issue of 500 or 900 portability in comments filed after passage of the 1996 Act. Interactive Services asserts that the 1996 Act requires LECs to provide service provider portability for 900 numbers when technically feasible, and that the record in this proceeding demonstrates that long-term service provider portability for 900 numbers is technically feasible. Interactive Services did not comment on whether service provider portability for 500 numbers is technically feasible. BellSouth states that the 1996 Act is silent with respect to the portability of non-geographic numbers.

3. Discussion

195. Section 251(b)(2) of the 1996 Act requires all LECs ''to provide, to the extent technically feasible, number portability in accordance with requirements prescribed by the Commission.'' Section 3, in turn, defines number portability as ''the ability of users of telecommunications services to retain, at the same location, existing telephone numbers * * * when switching from one telecommunications carrier to another.''

196. While both LECs and interexchange carriers are able to provide 500 and 900 services, such services are more frequently provided by IXCs. LECs, to date, have offered relatively few 500 and 900 services because the Bell Operating Companies, which serve over 76 percent of the nation's access lines, were precluded from offering interLATA services under the Modification of Final Judgment, and therefore could offer 500 and 900 services only on an intraLATA basis. Conversely, 500 and 900 interLATA services, which account for most of the 500 and 900 numbers, have, up until now, been exclusively provided by IXCs. Thus, most users of 500 and 900

services obtain their numbers from IXCs, and not from LECs.

197. Although the statute does not define specifically the numbers that must be portable, the statute on its face imposes an obligation to provide number portability only on LECs. Because the statute's directive to provide number portability applies only to LECs, IXCs are not obligated under the 1996 Act to participate in making their numbers portable when their customers wish to move their numbers to another IXC or any other carrier offering 500 or 900 service. In the case of 900 service, the ''user'' of the telecommunications service that wants to keep its number when switching carriers is the business that is offering a 900 service, not the end user that is purchasing the information service from the 900 service provider. A 900 service provider typically purchases transport from an IXC and uses a 900 number assigned to that IXC to offer its service. As a consequence, if a 900 service provider wishes to retain its number when switching from one carrier to another, the IXC (and not the LEC that provides exchange access to the IXC) is the party that would have to release the management of the number in question. Likewise, 500 service today is offered exclusively by IXCs, which have blocks of 500 numbers assigned to them for this purpose. When a 500 customer wishes to switch from one carrier to another, the IXC providing the 500 service (and not the LEC that provides exchange access to the 500 service provider) would have to relinquish the number in question to the competing carrier. Thus, as a practical matter, portability for the vast majority of 500 and 900 numbers can occur only if the IXC releases to the new carrier management of the assigned 500 or 900 number that is to be ported.

198. We recognize, however, that LECs increasingly may offer 500 and 900 services themselves in the future. To the extent they do, we conclude that those LECs would be obligated under the 1996 Act to offer number portability for their own 500 and 900 numbers to the extent ''technically feasible.'' We believe we have insufficient evidence in this record to determine whether it is technically feasible for LECs to provide portability for their own 500 and 900 numbers. Neither the INC nor state number portability task forces have addressed the issue of 500 and 900 number portability. The record developed on this issue largely predates passage of the 1996 Act, and as a consequence, few parties have focused on this issue. No party to this proceeding has suggested that any of the currently available methods, such as RCF or DID, or any of the long term methods currently under consideration, such as LRN, could be used to provide portability for non-geographic numbers. Instead, the parties that addressed this issue suggest that the current toll free database potentially could be modified to accommodate 500 and 900 numbers, but note that a host of major technical issues would need to be resolved. The only party to this proceeding that argues that the Commission is required under the 1996 Act to mandate service provider portability for 900 numbers, Interactive Services, fails to address the fact that the statutory obligation to offer number portability falls only on LECs, and not on other carriers that offer 900 services. No party has addressed the technical feasibility of modifying the existing toll free database to make only those 500 and 900 numbers that are assigned to LECs portable. We, therefore, direct the INC to examine this issue, and file a report with this Commission within twelve months of the effective date of this order addressing the technical feasibility of requiring LECs to make their assigned 500 and 900 numbers portable, whether it be through modifying the existing toll free database or through another system. Upon receipt of this report, we will take appropriate action under the 1996 Act.

Regulatory Flexibility Act Analysis

Final Analysis of First Report and Order

199. As required by section 603 of the Regulatory Flexibility Act, 5 U.S.C. 603 (RFA), an Initial Regulatory Flexibility Analysis (IRFA) was incorporated in the NPRM (60 FR 39136, August 1, 1995). The Commission sought written public comments on the proposals in the NPRM, including the Initial Regulatory Flexibility Analysis. Our final analysis conforms to the RFA, as amended by the Contract With America Advancement Act of 1996, Pub. L. No. 104–121, 110 Stat. 847 (1996) (CWAAA). Subtitle II of CWAAA is ''The Small Business Regulatory Enforcement Fairness Act of 1996'' (SBREFA). The Commission's Final Regulatory Flexibility Analysis (FRFA) in this Report and Order is as follows:

200. *Need for and Objectives of Rules:* The Commission, in compliance with sections 251(b)(2) and 251(d)(1) of the Communications Act of 1934, as amended by the Telecommunications Act of 1996 (the Act), adopts rules and procedures intended to ensure the prompt implementation of telephone number portability with the minimum regulatory and administrative burden on telecommunications carriers. These rules are necessary to implement the provision in the Telecommunications Act of 1996 (1996 Act) requiring local exchange carriers (LECs) to offer number portability, if technically feasible. In implementing the statute, the Commission has the responsibility to adopt rules that will implement most quickly and effectively the national telecommunications policy embodied in the Act and to promote the pro-competitive, deregulatory markets envisioned by Congress. Congress has recognized that number portability will lower barriers to entry and promote competition in the local exchange marketplace.

201. *Summary of Significant Issues Raised by the Public in Response to the IRFA:* There were no comments submitted in response to the Initial Regulatory Flexibility Analysis. The Chief Counsel for Advocacy of the United States Small Business Administration filed comments on the NPRM which generally support the actions we take in this Report and Order. However, in their general comments, some commenters suggested a course of action which may result in less of an impact on small entities. Specifically, prior to passage of the 1996 Act, some LECs asserted that the Commission should neither adopt, nor direct the adoption of, number portability without performing a thorough cost/benefit analysis. Most parties, however, now agree that the 1996 Act clearly directs the Commission to implement long-term number portability. In the Report and Order, we concluded that Congress has determined that the Commission should develop a national number portability policy and has specifically directed us to prescribe the requirements that all local exchange carriers, both incumbents and others, must meet to satisfy their statutory obligations. *See* 47 U.S.C. 251(b)(2), (d). Moreover, section 251(e)(1)'s assignment to the Commission of exclusive jurisdiction over that portion of the North American Numbering Plan (NANP) that pertains to the United States gives us authority over the implementation of number portability to the extent that such implementation will affect the NANP. *See* 47 U.S.C. 251(e)(1).

202. *Description and Estimate of Number of Small Businesses to Which Rules Will Apply:* The Regulatory Flexibility Act generally defines the term ''small business'' as having the same meaning as the term ''small business concern'' under the Small Business Act, 15 U.S.C. 632. A small business concern is one which (1) is independently owned and operated; (2) is not dominant in its field of operation;

and (3) satisfies any additional criteria established by the Small Business Administration (SBA). *Id*. According to the SBA's regulations, entities engaged in the provision of telephone service may have a maximum of 1,500 employees in order to qualify as a small business concern. 13 CFR 121.201. This standard also applies in determining whether an entity is a small business for purposes of the Regulatory Flexibility Act.

203. Our rules governing long-term number portability apply to all LECs, including incumbent LECs as well as new LEC entrants, and also apply to cellular, broadband PCS, and covered SMR providers. According to the SBA definition, incumbent LECs do not qualify as small businesses because they are dominant in their field of operation. Accordingly, we will not address the impact of these rules on incumbent LECs.

204. However, our rules may have a significant economic impact on a substantial number of small businesses insofar as they apply to telecommunications carriers other than incumbent LECs. The rules may have such an impact upon new entrant LECs, as well as cellular, broadband PCS, and covered SMR providers. Based upon data contained in the most recent census and a report by the Commission's Common Carrier Bureau, we estimate that 2,100 carriers could be affected. We have derived this estimate based on the following analysis:

205. According to the 1992 Census of Transportation, Communications, and Utilities, there were approximately 3,469 firms with under 1,000 employees operating under the Standard Industrial Classification (SIC) category 481—Telephone. *See* U.S. Dept. of Commerce, Bureau of the Census, *1992 Census of Transportation, Communications, and Utilities* (issued May 1995). Many of these firms are the incumbent LECs and, as noted above, would not satisfy the SBA definition of a small business because of their market dominance. There were approximately 1,350 LECs in 1995. Industry Analysis Division, FCC, *Carrier Locator: Interstate Service Providers* at Table 1 (Number of Carriers Reporting by Type of Carrier and Type of Revenue) (December 1995). Subtracting this number from the total number of firms leaves approximately 2,119 entities which potentially are small businesses which may be affected. This number contains various categories of carriers, including competitive access providers, cellular carriers, interexchange carriers, mobile service carriers, operator service providers, pay telephone operators, PCS providers, covered SMR providers, and resellers. Some of these carriers—although not dominant—may not meet the other requirement of the definition of a small business because they are not ''independently owned and operated.'' *See* 15 U.S.C. 632. For example, a PCS provider which is affiliated with a long distance company with more than 1,000 employees would be disqualified from being considered a small business. Another example would be if a cellular provider is affiliated with a dominant LEC. Thus, a reasonable estimate of the number of ''small businesses'' affected by this Order would be approximately 2,100.

206. *Description of Projected Reporting, Recordkeeping and Other Compliance Requirements of the Rules:* There are several reporting requirements imposed by the Report and Order. It is likely that the entities filing the reports will require the services of persons with technical expertise to prepare the reports. First, carriers participating in a field test in the Chicago, Illinois, area are required to file with the Commission a report of their findings within 30 days after completion of the test. At this time, it is not clear how many carriers will be participating, but it is likely to include several new entrant LECs and the dominant incumbent LEC in the region. Second, after December 31, 1998, long-term number portability must be provided by LECs outside of the 100 largest MSAs within six months after a specific request by another telecommunications carrier in which the requesting carrier is operating or plans to operate. The request specifically must request long-term number portability, identify the discrete geographic area covered by the request, and provide a tentative date six or more months in the future when the carrier expects to need number portability in order to port prospective customers. Third, state regulatory commissions must file with the Commission a notification if they opt to develop a state-specific database in lieu of participating in a regional database system. Carriers that object to a state decision to opt out of the regional database system may file with the Commission a petition for relief. Fourth, the item requires any administrator selected by a state prior to the release of the Report and Order, that wishes to bid for administration of one of the regional databases, must submit a new proposal in accordance with the guidelines established by the NANC. We expect that only one entity, Lockheed Martin, will be subject to this requirement since it is the only administrator which has been selected by a state to date. Fifth, the Report and Order requires carriers that are unable to meet the deadlines for implementing a long-term number portability solution to file with the Commission at least 60 days in advance of the deadline a petition to extend the time by which implementation in its network will be completed. Finally, we require an industry body known as the Industry Numbering Committee (INC) to file a report with the Commission on the portability of non-geographic numbers assigned to LECs within 12 months after the effective date of the Report and Order.

207. *Steps Taken to Minimize Impact on Small Entities Consistent with Stated Objectives:* The Commission's actions in this Report and Order will benefit small entities by facilitating their entry into the local exchange market. The record in this proceeding indicates that the lack of number portability would deter entry by competitive providers of local service because of the value customers place on retaining their telephone numbers. These competitive providers, many of which may be small entities, may find it easier to enter the market as a result of number portability which will eliminate this barrier to entry.

208. In general, we have attempted to keep burdens on local exchange carriers to a minimum. For example, we have adopted a phased deployment schedule which requires long-term number portability to be implemented initially in the 100 largest MSAs, and then elsewhere upon a carrier's request. The provision of currently available measures is conditioned upon request only. In addition, we have attempted to minimize the impact of our rules upon cellular, broadband PCS, and covered SMR providers, which may be small businesses, by not requiring such carriers to offer currently available number portability measures. Similarly, paging and messaging service providers, which may be small entities, are required to provide neither currently available measures nor long-term number portability under our rules. The regulatory burdens we have imposed are necessary to ensure that the public receives the benefit of the expeditious provision of service provider number portability in accordance with the statutory requirements.

V. Ordering Clauses

209. Accordingly, it is ordered that, pursuant to the authority contained in sections 1, 4(i), 4(j), 201–205, 218, 251, and 332 of the Communications Act as amended, 47 U.S.C. 151, 154(i), 154(j), 201–205, 218, 251 and 332, Part 20 of

the Commission's rules, 47 CFR part 20, is amended, and part 52 of the Commission's rules, 47 CFR part 52, is added as set forth below.

210. It is further ordered that the policies, rules, and requirements set forth herein are adopted, effective August 26, 1996 except for collections of information subject to approval by the Office of Management and Budget (OMB), which are effective December 23, 1996.

211. It is further ordered that, pursuant to the authority contained in sections 1, 4(i), 4(j), 201–205, 218, 251, and 332 of the Communications Act as amended, 47 U.S.C. 151, 154(i), 154(j), 201–205, 218, 251, and 332, a Further Notice of Proposed Rulemaking is hereby adopted.

212. It is further ordered that BellSouth's Motion to Accept Late Filed Comments is granted.

213. It is further ordered that authority is delegated to the Chief, Common Carrier Bureau, as set forth *supra* in ¶¶ 78, 79, 85, 97, and to the Chief, Wireless Telecommunications Bureau, as set forth *supra* in ¶¶ 166, 167.

List of Subjects

47 CFR Part 20

Federal Communications Commission, Local number portability, Radio, Telecommunications.

47 CFR Part 52

Federal Communications Commission, Cost recovery, Database architecture and administration, Local exchange carrier, Local number portability, Long-term database methods, Numbering, Telecommunications, Transitional methods.

Federal Communications Commission.

William F. Caton,

Acting Secretary.

Rule Changes

Parts 20 and 52 of Title 47 of the Code of Federal Regulations are amended as follows:

PART 20—COMMERCIAL MOBILE RADIO SERVICES

1. The authority citation for part 20 continues to read as follows:

Authority: Secs. 4, 303, and 332, 48 Stat. 1066, 1082, as amended; 47 U.S.C. 154, 303, and 332, unless otherwise noted.

2. Section 20.15 is amended by adding paragraph (e) to read as follows:

§ 20.15 Requirements under Title II of the Communications Act.

* * * * *

(e) For obligations of commercial mobile radio service providers to provide local number portability, see § 52.1 of this chapter.

3. A new part 52 is added to read as follows:

PART 52—NUMBERING

Subpart A—[Reserved]

Subpart B—Local Number Portability

Sec.
52.1 Definitions.
52.3 Deployment of long-term database methods for number portability by LECs.
52.5 Database architecture and administration.
52.7 Deployment of transitional measures for number portability.
52.9 Cost recovery for transitional measures for number portability.
52.11 Deployment of long-term database methods for number portability by CMRS providers.
52.12 through 52.99 [Reserved].

Appendix to Part 52—Deployment Sechdule for Long-Term Database Methods for Local Number Portability

Authority: Sec. 4, 48 Stat. 1066, as amended; 47 U.S.C. 154, unless otherwise noted. Interpret or apply sec. 153, 154, 201–04, 218, 225–7, 251–2, 271, 48 Stat. 1070, as amended, 1077; 47 U.S.C. 201–04, 218, 225–7, 251–2, 271 unless otherwise noted.

Subpart A—[Reserved]

Subpart B—Local Number Portability

§ 52.1 Definitions.

As used in this subpart:

(a) The term *broadband PCS* has the same meaning as that term is defined in § 24.5 of this chapter.

(b) The term *cellular service* has the same meaning as that term is defined in § 22.99 of this chapter.

(c) The term *covered SMR* means either 800 MHz and 900 MHz SMR licensees that hold geographic area licenses or incumbent wide area SMR licensees that offer real-time, two-way switched voice service that is interconnected with the public switched network, either on a stand-alone basis or packaged with other telecommunications services. This term does not include local SMR licensees offering mainly dispatch services to specialized customers in a non-cellular system configuration, licensees offering only data, one-way, or stored voice services on an interconnected basis, or any SMR provider that is not interconnected to the public switched network.

(d) The term *database method* means a number portability method that utilizes one or more external databases for providing called party routing information.

(e) The term *downstream database* means a database owned and operated by an individual carrier for the purpose of providing number portability in conjunction with other functions and services.

(f) The term *incumbent local exchange carrier* means, with respect to an area, the local exchange carrier that:

(1) On February 8, 1996, provided telephone exchange service in such area; and

(2)(i) On February 8, 1996, was deemed to be a member of the exchange carrier association pursuant to § 69.601(b) of the Commission's regulations (47 CFR 69.601(b)); or

(ii) Is a person or entity that, on or after February 8, 1996, became a successor or assign of a member described in paragraph (f)(2)(i) of this section.

(g) The term *incumbent wide area SMR licensee* has the same meaning as that term is defined in § 20.3 of this chapter.

(h) The term *local exchange carrier* means any person that is engaged in the provision of telephone exchange service or exchange access. For purposes of this subpart, such term does not include a person insofar as such person is engaged in the provision of a commercial mobile service under 47 U.S.C. 332(c).

(i) The term *local number portability administrator (LNPA)* means an independent, non-governmental entity, not aligned with any particular telecommunications industry segment, whose duties are determined by the NANC.

(j) The term *location portability* means the ability of users of telecommunications services to retain existing telecommunications numbers without impairment of quality, reliability, or convenience when moving from one physical location to another.

(k) The term *long-term database method* means a database method that complies with the performance criteria set forth in § 52.3(a).

(l) The term *North American Numbering Council (NANC)* means an advisory committee created under the Federal Advisory Committee Act, 5 U.S.C., App (1988), to advise the Commission and to make recommendations, reached through consensus, that foster efficient and impartial number administration.

(m) The term *number portability* means the ability of users of telecommunications services to retain, at the same location, existing telecommunications numbers without impairment of quality, reliability, or convenience when switching from one telecommunications carrier to another.

(n) The term *regional database* means an SMS database or an SMS/SCP pair that contains information necessary for carriers to provide number portability in a region as determined by the NANC.

(o) The term *service control point (SCP)* means a database in the public switched network which contains information and call processing instructions needed to process and complete a telephone call. The network switches access an SCP to obtain such information. Typically, the information contained in an SCP is obtained from the SMS.

(p) The term *service management system (SMS)* means a database or computer system not part of the public switched network that, among other things:

(1) Interconnects to an SCP and sends to that SCP the information and call processing instructions needed for a network switch to process and complete a telephone call; and

(2) Provides telecommunications carriers with the capability of entering and storing data regarding the processing and completing of a telephone call.

(q) The term *service portability* means the ability of users of telecommunications services to retain existing telecommunications numbers without impairment of quality, reliability, or convenience when switching from one telecommunications service to another, without switching from one telecommunications carrier to another.

(r) The term *service provider portability* means the ability of users of telecommunications services to retain, at the same location, existing telecommunications numbers without impairment of quality, reliability, or convenience when switching from one telecommunications carrier to another.

(s) The term *telecommunications* means the transmission, between or among points specified by the user, of information of the user's choosing, without change in the form or content of the information as sent and received.

(t) The term *telecommunications carrier* means any provider of telecommunications services, except that such term does not include aggregators of telecommunications services (as defined in 47 U.S.C. 226(a)(2)).

(u) The term *telecommunications service* means the offering of telecommunications for a fee directly to the public, or to such classes of users as to be effectively available directly to the public, regardless of the facilities used.

(v) The term *transitional measure* means a method such as Remote Call Forwarding (RCF), Flexible Direct Inward Dialing (DID), or other comparable and technically feasible arrangement that allows one local exchange carrier to transfer telephone numbers from its network to the network of another telecommunications carrier, but does not comply with the performance criteria set forth in § 52.3(a).

§ 52.3 Deployment of long-term database methods for number portability by LECs.

(a) Subject to paragraphs (b) and (c) of this section, all local exchange carriers (LECs) must provide number portability in compliance with the following performance criteria:

(1) Supports network services, features, and capabilities existing at the time number portability is implemented, including but not limited to emergency services, CLASS features, operator and directory assistance services, and intercept capabilities;

(2) Efficiently uses numbering resources;

(3) Does not require end users to change their telecommunications numbers;

(4) Does not require telecommunications carriers to rely on databases, other network facilities, or services provided by other telecommunications carriers in order to route calls to the proper termination point;

(5) Does not result in unreasonable degradation in service quality or network reliability when implemented;

(6) Does not result in any degradation in service quality or network reliability when customers switch carriers;

(7) Does not result in a carrier having a proprietary interest;

(8) Is able to migrate to location and service portability; and

(9) Has no significant adverse impact outside the areas where number portability is deployed.

(b) All LECs must provide a long-term database method for number portability in the 100 largest Metropolitan Statistical Areas (MSAs) by December 31, 1998, in accordance with the deployment schedule set forth in the appendix to this part 52.

(c) Beginning January 1, 1999, all LECs must make a long-term database method for number portability available within six months after a specific request by another telecommunications carrier in areas in which that telecommunications carrier is operating or plans to operate.

(d) The Chief, Common Carrier Bureau, may waive or stay any of the dates in the implementation schedule, as the Chief determines is necessary to ensure the efficient development of number portability, for a period not to exceed 9 months (*i.e.*, no later than September 30, 1999).

(e) In the event a LEC is unable to meet the Commission's deadlines for implementing a long-term database method for number portability, it may file with the Commission at least 60 days in advance of the deadline a petition to extend the time by which implementation in its network will be completed. A LEC seeking such relief must demonstrate through substantial, credible evidence the basis for its contention that it is unable to comply with the deployment schedule set forth in the appendix to this part 52. Such requests must set forth:

(1) The facts that demonstrate why the carrier is unable to meet the Commission's deployment schedule;

(2) A detailed explanation of the activities that the carrier has undertaken to meet the implementation schedule prior to requesting an extension of time;

(3) An identification of the particular switches for which the extension is requested;

(4) The time within which the carrier will complete deployment in the affected switches; and

(5) A proposed schedule with milestones for meeting the deployment date.

(f) The Chief, Common Carrier Bureau, shall monitor the progress of local exchange carriers implementing number portability, and may direct such carriers to take any actions necessary to ensure compliance with the deployment schedule set forth in the appendix to this part 52.

(g) Carriers that are members of the Illinois Local Number Portability Workshop must conduct a field test of any technically feasible long-term database method for number portability in the Chicago, Illinois, area concluding no later than August 31, 1997. The carriers participating in the test must jointly file with the Common Carrier Bureau a report of their findings within 30 days following completion of the test. The Chief, Common Carrier Bureau, shall monitor developments during the field test.

§ 52.5 Database architecture and administration.

(a) The North American Numbering Council (NANC) shall direct establishment of a nationwide system of regional SMS databases for the provision of long-term database methods for number portability.

(b) All telecommunications carriers shall have equal and open access to the regional databases.

(c) The NANC shall select a local number portability administrator(s) (LNPA(s)) to administer the regional databases within seven months of the initial meeting of the NANC.

(d) The NANC shall determine whether one or multiple administrator(s) should be selected, whether the LNPA(s) can be the same entity selected to be the North American Numbering Plan Administrator, how the LNPA(s) should be selected, the specific duties of the LNPA(s), the geographic coverage of the regional databases, the technical interoperability and operational standards, the user interface between telecommunications carriers and the LNPA(s), the network interface between the SMS and the downstream databases, and the technical specifications for the regional databases.

(e) Once the NANC has selected the LNPA(s) and determined the locations of the regional databases, it must report its decisions to the Commission.

(f) The information contained in the regional databases shall be limited to the information necessary to route telephone calls to the appropriate telecommunications carriers. The NANC shall determine what specific information is necessary.

(g) Any state may opt out of its designated regional database and implement a state-specific database. A state must notify the Common Carrier Bureau and NANC that it plans to implement a state-specific database within 60 days from the release date of the Public Notice issued by the Chief, Common Carrier Bureau, identifying the administrator selected by the NANC and the proposed locations of the regional databases. Carriers may challenge a state's decision to opt out of the regional database system by filing a petition with the Commission.

(h) Individual state databases must meet the national requirements and operational standards recommended by the NANC and adopted by the Commission. In addition, such state databases must be technically compatible with the regional system of databases and must not interfere with the scheduled implementation of the regional databases.

(i) Individual carriers may download information necessary to provide number portability from the regional databases into their own downstream databases. Individual carriers may mix information needed to provide other services or functions with the information downloaded from the regional databases at their own downstream databases. Carriers may not withhold any information necessary to provide number portability from the regional databases on the grounds that such data has been combined with other information in its downstream database.

§ 52.7 Deployment of transitional measures for number portability.

All LECs shall provide transitional measures, which may consist of Remote Call Forwarding (RCF), Flexible Direct Inward Dialing (DID), or any other comparable and technically feasible method, as soon as reasonably possible upon receipt of a specific request from another telecommunications carrier, until such time as the LEC implements a long-term database method for number portability in that area.

§ 52.9 Cost recovery for transitional measures for number portability.

Any cost recovery mechanism for the provision of number portability pursuant to § 52.7(a), that is adopted by a state commission must not:

(a) Give one telecommunications carrier an appreciable, incremental cost advantage over another telecommunications carrier, when competing for a specific subscriber (*i.e.*, the recovery mechanism may not have a disparate effect on the incremental costs of competing carriers seeking to serve the same customer); or

(b) Have a disparate effect on the ability of competing telecommunications carriers to earn a normal return on their investment.

§ 52.11 Deployment of long-term database methods for number portability by CMRS providers.

(a) By June 30, 1999, all cellular, broadband PCS, and covered SMR providers must provide a long-term database method for number portability, including the ability to support roaming, in compliance with the performance criteria set forth in § 52.3(a).

(b) By December 31, 1998, all cellular, broadband PCS, and covered SMR providers must have the capability to obtain routing information, either by querying the appropriate database themselves or by making arrangements with other carriers that are capable of performing database queries, so that they can deliver calls from their networks to any party that has retained its number after switching from one telecommunications carrier to another.

(c) The Chief, Wireless Telecommunications Bureau, may waive or stay any of the dates in the implementation schedule, as the Chief determines is necessary to ensure the efficient development of number portability, for a period not to exceed 9 months (*i.e.*, no later than September 30, 1999, for the deadline in paragraph (b) of this section, and no later than March 31, 2000, for the deadline in paragraph (a) of this section).

(d) In the event a carrier subject to paragraphs (a) and (b) of this section is unable to meet the Commission's deadlines for implementing a long-term number portability method, it may file with the Commission at least 60 days in advance of the deadline a petition to extend the time by which implementation in its network will be completed. A carrier seeking such relief must demonstrate through substantial, credible evidence the basis for its contention that it is unable to comply with paragraphs (a) and (b) of this section. Such requests must set forth:

(1) The facts that demonstrate why the carrier is unable to meet our deployment schedule;

(2) A detailed explanation of the activities that the carrier has undertaken to meet the implementation schedule prior to requesting an extension of time;

(3) An identification of the particular switches for which the extension is requested;

(4) The time within which the carrier will complete deployment in the affected switches; and

(5) A proposed schedule with milestones for meeting the deployment date.

(e) The Chief, Wireless Telecommunications Bureau, may establish reporting requirements in order to monitor the progress of cellular, broadband PCS, and covered SMR providers implementing number portability, and may direct such carriers to take any actions necessary to ensure compliance with this deployment schedule.

§§ 52.12 through 52.99 [Reserved]

Appendix to Part 52—Deployment Schedule for Long-Term Database Methods for Local Number Portability

Implementation must be completed by the carriers in the relevant MSAs during the periods specified below:

10/97–12/97	
Chicago, IL	3
Philadelphia, PA	4
Atlanta, GA	8
New York, NY	2
Los Angeles, CA	1
Houston, TX	7
Minneapolis, MN	12
1/98–3/98	
Detroit, MI	6
Cleveland, OH	20
Washington, DC	5
Baltimore, MD	18
Miami, FL	24
Fort Lauderdale, FL	39
Orlando, FL	40
Cincinnati, OH	30

Tampa, FL	23
Boston, MA	9
Riverside, CA	10
San Diego, CA	14
Dallas, TX	11
St. Louis, MO	16
Phoenix, AZ	17
Seattle, WA	22
4/98–6/98	
Indianapolis, IN	34
Milwaukee, WI	35
Columbus, OH	38
Pittsburgh, PA	19
Newark, NJ	25
Norfolk, VA	32
New Orleans, LA	41
Charlotte, NC	43
Greensboro, NC	48
Nashville, TN	51
Las Vegas, NV	50
Nassau, NY	13
Buffalo, NY	44
Orange Co, CA	15
Oakland, CA	21
San Francisco, CA	29
Rochester, NY	49
Kansas City, KS	28
Fort Worth, TX	33
Hartford, CT	46
Denver, CO	26
Portland, OR	27
7/98–9/98	
Grand Rapids, MI	56
Dayton, OH	61
Akron, OH	73
Gary, IN	80
Bergen, NJ	42
Middlesex, NJ	52
Monmouth, NJ	54
Richmond, VA	63
Memphis, TN	53
Louisville, KY	57
Jacksonville, FL	58
Raleigh, NC	59
West Palm Beach, FL	62
Greenville, SC	66
Honolulu, HI	65
Providence, RI	47
Albany, NY	64
San Jose, CA	31
Sacramento, CA	36
Fresno, CA	68
San Antonio, TX	37
Oklahoma City, OK	55
Austin, TX	60
Salt Lake City, UT	45
Tucson, AZ	71
10/98–12/98	
Toledo, OH	81
Youngstown, OH	85
Ann Arbor, MI	95
Fort Wayne, IN	100
Scranton, PA	78
Allentown, PA	82
Harrisburg, PA	83
Jersey City, NJ	88
Wilmington, DE	89
Birmingham, AL	67
Knoxville, KY	79
Baton Rouge, LA	87
Charleston, SC	92
Sarasota, FL	93
Mobile, AL	96
Columbia, SC	98
Tulsa, OK	70
Syracuse, NY	69
Springfield, MA	86
Ventura, CA	72
Bakersfield, CA	84
Stockton, CA	94
Vallejo, CA	99
El Paso, TX	74
Little Rock, AR	90
Wichita, KS	97
New Haven, CT	91
Omaha, NE	75
Albuquerque, NM	76
Tacoma, WA	77

Note: This Appendix A will not be published in the Code of Federal Regulations.

Appendix A—100 Largest Metropolitan Statistical Areas (MSAs) and Their Populations

1. Los Angeles, CA	9,150,000
2. New York, NY	8,584,000
3. Chicago, IL	7,668,000
4. Philadelphia, PA	4,949,000
5. Washington, DC	4,474,000
6. Detroit, MI	4,307,000
7. Houston, TX	3,653,000
8. Atlanta, GA	3,331,000
9. Boston, MA*	3,211,000
10. Riverside, CA	2,907,000
11. Dallas, TX	2,898,000
12. Minneapolis, MN	2,688,000
13. Nassau, NY	2,651,000
14. San Diego, CA	2,621,000
15. Orange Co., CA	2,543,000
16. St. Louis, MO	2,536,000
17. Phoenix, AZ	2,473,000
18. Baltimore, MD	2,458,000
19. Pittsburgh, PA	2,402,000
20. Cleveland, OH	2,222,000
21. Oakland, CA	2,182,000
22. Seattle, WA	2,180,000
23. Tampa, FL	2,157,000
24. Miami, FL	2,025,000
25. Newark, NJ	1,934,000
26. Denver, CO	1,796,000
27. Portland, OR	1,676,000
28. Kansas City, KS	1,647,000
29. San Francisco, CA	1,646,000
30. Cincinnati, OH	1,581,000
31. San Jose, CA	1,557,000
32. Norfolk, VA	1,529,000
33. Fort Worth, TX	1,464,000
34. Indianapolis, IN	1,462,000
35. Milwaukee, WI	1,456,000
36. Sacramento, CA	1,441,000
37. San Antonio, TX	1,437,000
38. Columbus, OH	1,423,000
39. Fort Lauderdale, FL	1,383,000
40. Orlando, FL	1,361,000
41. New Orleans, LA	1,309,000
42. Bergen, NJ	1,304,000
43. Charlotte, NC	1,260,000
44. Buffalo, NY	1,189,000
45. Salt Lake City, UT	1,178,000
46. Hartford, CT*	1,156,000
47. Providence, RI*	1,131,000
48. Greensboro, NC	1,107,000
49. Rochester, NY	1,090,000
50. Las Vegas, NV	1,076,000
51. Nashville, TN	1,070,000
52. Middlesex, NJ	1,069,000
53. Memphis, TN	1,056,000
54. Monmouth, NJ	1,035,000
55. Oklahoma City, OK	1,007,000
56. Grand Rapids, MI	985,000
57. Louisville, KY	981,000
58. Jacksonville, FL	972,000
59. Raleigh, NC	965,000
60. Austin, TX	964,000
61. Dayton, OH	956,000
62. West Palm Beach, FL	955,000
63. Richmond, VA	917,000
64. Albany, NY	875,000
65. Honolulu, HI	874,000
66. Greenville, SC	873,000
67. Birmingham, AL	872,000
68. Fresno, CA	835,000
69. Syracuse, NY	754,000
70. Tulsa, OK	743,000
71. Tucson, AZ	732,000
72. Ventura, CA	703,000
73. Akron, OH	677,000
74. El Paso, TX	665,000
75. Omaha, NE	663,000
76. Albuquerque, NM	646,000
77. Tacoma, WA	638,000
78. Scranton, PA	637,000
79. Knoxville, TN	631,000
80. Gary, IN	620,000
81. Toledo, OH	614,000
82. Allentown, PA	612,000
83. Harrisburg, PA	610,000
84. Bakersfield, CA	609,000
85. Youngstown, OH	604,000
86. Springfield, MA*	584,000
87. Baton Rouge, LA	558,000
88. Jersey City, NJ	552,000
89. Wilmington, DE	539,000
90. Little Rock, AR	538,000
91. New Haven, CT*	527,000
92. Charleston, SC	522,000
93. Sarasota, FL	518,000
94. Stockton, CA	518,000
95. Ann Arbor, MI	515,000
96. Mobile, AL	512,000
97. Wichita, KS	507,000
98. Columbia, SC	486,000
99. Vallejo, CA	483,000
100. Fort Wayne, IN	469,000

*Population figures for New England's city and town based MSAs are for 1992, while others are for 1994.

Note: This Appendix B will not be published in the Code of Federal Regulations.

Appendix B—Description of Number Portability Methods

I. Database methods

1. *Location Routing Number (LRN).* Under AT&T's LRN proposal, a carrier seeking to route a call to a ported number queries or ''dips'' an external routing database, obtains a ten-digit location routing number for the ported number, and uses that location routing number to route the call to the end office switch which serves the called party. The carrier dipping the database may be the originating carrier, the terminating carrier, or the N–1 carrier (the carrier prior to the terminating carrier). Under the LRN method, a unique location routing number is assigned to each switch. For example, a local service provider receiving a 7-digit local call, such as 887–1234, would examine the dialed number to determine if the NPA–NXX is a portable code. If so, the 7 digit dialed number would be prefixed with the NPA and a 10-digit query (*e.g.,* 679–887–1234) would be launched to the routing database. The routing database then would return the LRN (*e.g.,*

679–267–0000) associated with the dialed number which the local service provider uses to route the call to the appropriate switch. The local service provider then would formulate an SS7 call set up message with a generic address parameter, along with the forward call indicator set to indicate that the query has been performed, and route the call to the local service provider's tandem for forwarding.

2. LRN is a ''single-number solution'' because only one number (*i.e.*, the number dialed by the calling party) is used to identify the customer in the serving switch. Each switch has one network address—the location routing number. The record and the Industry Numbering Committee (INC) indicate that LRN supports custom local area signalling services (CLASS), emergency services, and operator and directory services, but may result in some additional post-dial delay. LRN can support location and service as well as service provider portability. Finally, LRN supports wireless-wireline and wireless-wireless service provider portability.

3. *Carrier Portability Code (CPC).* Under CPC, each local service provider within a given area would be assigned a three-digit Carrier Portability Code (CPC). The database serving that area would contain all the telephone numbers that have been transferred from one carrier to another and their corresponding CPCs. A carrier querying the database for purposes of routing a call to a customer that has transferred his or her telephone number would know from the NXX code of the dialed number that the telephone number may have been transferred to another local service provider. The carrier would query a database serving that area, which would return to the carrier a three-digit CPC corresponding to the service provider serving the dialed number. The carrier then would route the call according to the carrier portability code and the dialed NXX code. For example, an IXC delivering a call to the 301 NPA would query the database serving the 301 area code. In return, that database would transmit back to the IXC a ten-digit number consisting of the three-digit NPA replaced with the CPC for the LEC serving that customer, plus the customer's seven-digit telephone number. The IXC then would route the call to the location pre-designated by the terminating carrier based on the six-digit CPC–NXX. Similarly, carriers providing service within the area would query the same database to identify the local service provider responsible for handling specific local calls.

4. AT&T asserts that CPC is compatible with LRN by permitting adoption of switch trigger mechanisms, switch interfaces, signalling translations, and the development of an SMS to an LRN environment. CPC supports an N–1 call processing scenario, avoids routing calls through incumbent LEC networks, permits carriers to own or provide for their own routing databases, and supports vertical features. On the other hand, the CPC method essentially uses two NPA codes, and therefore precludes use of the second NPA code for other purposes. CPC supports location portability to a limited extent. It is not clear how operator services, such as busy line verification, collect calls, calling card calls, and third-party billing, would be handled under this proposal. Routing telephone calls based on carrier portability codes likely will require, among other things, that the software be modified in each network switch located in the NPA within which this system is deployed. It also would require modification to the Local Exchange Routing Guide (LERG) on the same NPA-basis so that the LERG contains routing data based on carrier portability codes.

5. *Release-to-Pivot (RTP).* Carriers using RTP attempt to complete all calls as they presently do to a switch that is assigned a given NPA–NXX. If the dialed number has not been ported, the call will be completed exactly as it is currently. If the dialed number has been ported from the switch (the ''release'' switch), the call will be released back to a previous switch (the ''pivot'' switch) in the call path along with rerouting information (RI). The pivot switch uses the RI to reroute the call to the new switch. For example, a switch with pivot capabilities would determine whether a particular call should proceed to a release capable switch. The pivot switch would formulate an initial address message (IAM) containing a capability indicator informing the release switch that the call can be released back to the pivot switch. Once the release switch receives the call, it would use a translation table to determine whether the called number has been ported. If it has, the switch then would formulate a release message containing a cause value (RTP) and an LRN for delivery back to the pivot switch. The LRN would be included in the release message as a redirection number. The pivot switch then would access a translation table and determine routing based on the first six digits of the LRN. A new IAM then would be formulated and the call redirected to the appropriate switch.

6. RTP must traverse the existing LEC network by means of switches equipped with release and pivot functionality and an internal database for call setup. RTP using the location routing number to route calls is a single-number solution. RTP does not involve the assignment of ''pseudo numbers,'' which minimizes number exhaust. RTP should not interfere with emergency services or operator and directory services, but may increase call setup time and post-dial delay. RTP can support service as well as service provider portability, but it is unclear to what extent RTP can support location portability. Finally, RTP supports portability between wireless carriers, but it is unclear whether it can support wireless-wireline portability. Some parties believe that RTP is not appropriate for long-term implementation of service provider portability because of its reliance on the networks of incumbent LECs, the potential for post-dial delay, and its inefficient use of signaling links.

7. *Query on Release (QOR).* Also known as ''Look Ahead,'' QOR is similar to RTP in that queries are performed only for calls to ported numbers. However, QOR is different in several respects. Prior to querying a routing database, the switch from which the call originates reserves the appropriate call path through the SS7 network and attempts to complete a call to the switch where the NPA–NXX of the dialed number resides. If the number is ported, the call is released back to a previous switch in the call path, which performs a query to determine the LRN of the new serving switch. The call then is routed to the serving switch. This method differs from RTP in that when a number has been ported from the Release switch, the previous switch in the call path will query the database to obtain the routing information instead of that information being supplied by the Release switch. In other words, the switch that redirects the call also performs the query, thus eliminating the need for the carrier to which the number was originally assigned to provide routing information. Pacific Bell indicates that QOR can support both location and service portability, since any call can be released back and routed through a non-incumbent provider's network.

8. *Local Area Number Portability (LANP).* Under this proposal, each customer is assigned a ten-digit customer number address (CNA) which is mapped to a unique ten-digit network node address (NNA), both of which are stored in routing databases. A service provider receives the called number (the CNA), queries a routing database, translates the called number from its CNA to its associated NNA, uses the NNA to route the call, and passes the NNA to the serving end office which, based on the NNA, terminates the call to the appropriate line or trunk. Unlike LRN, which assigns a unique location routing number to each switch, LANP requires a separate NNA for each CNA. The California Local Number Portability Task Force indicates that LANP does not result in post-dial delay or require changes in the wireless networks. In addition, LANP supports service provider, service, and unrestricted location portability. Moreover, the CNA can be disassociated from the switches and moved to a common pool of numbers for reassignment. However, LANP may impact emergency services, as the information displayed at the Public Safety Answering Point (PSAP) will initially be the NNA rather than the CNA. Some parties and state commissions believe that the LANP method is not a viable option for long-term number portability because it is too complicated to implement.

9. *Non-Geographic Number (NGN).* Under this approach, which overlays the existing LEC network, a ported subscriber is assigned a non-geographic number (NGN) and a geographic number (GN) that indicates the customer's physical location and the serving central office. If the customer moves or changes local service providers, the GN—but not the NGN—changes, similar to 800 service. When the NGN is dialed, the NGN is translated into the GN through a database query, and the call is routed based on the GN as is done today. All other calls are processed as they are currently. A database dip is required only for calls to ported numbers. Ported calls will experience longer call setup delay and post-dial delay. Emergency and operator and directory services are not affected. This approach supports service provider, service, and unlimited location portability. On the other hand, NGN strains numbering resources by forcing all ported

customers to limited non-geographic numbers, requires a nationwide cut-over, and requires an initial change of telephone numbers to obtain portability.

II. Non-database methods

1. *Remote Call Forwarding (RCF).* RCF is an existing LEC service that redirects calls in the telephone network and can be adapted to provide a semblance of service provider number portability. If a customer transfers his or her existing telephone number from Carrier A to Carrier B, any call to that customer is routed to the central office switch operated by Carrier A that is designated by the NXX code of the customer's telephone number. Carrier A's switch routes that call to Carrier B, translating the dialed number into a number with an NXX corresponding to a switch operated by Carrier B. Carrier B then completes the routing of the call to its customer. The change in terminating carriers is transparent to the calling party. Disadvantages of RCF include the following: (1) It requires the use of two, ten-digit telephone numbers and thus strains number plan administration and contributes to area code exhaust; (2) it generally does not support several custom local area signalling services (CLASS), such as caller ID, and may degrade transmission quality, because it actually places a second call to a transparent telephone number; (3) it can handle only a limited number of calls to customers of the same competing service provider at any one time; (4) it may result in longer call set-up times; (5) it requires the use of the incumbent LEC network for routing of calls; (6) it may enable incumbents to access competitors' proprietary information; (7) it may result in more complicated resolution of customer complaints; (8) the potential for call blocking may be increased; and (9) it may impose substantial costs upon new entrants.

2. *Flexible Direct Inward Dialing (DID).* DID works similarly to RCF, except the original service provider routes calls to the dialed number over a dedicated facility to the new service provider's switch instead of translating the dialed number to a new number. DID has many of the same limitations as RCF, although DID can process more simultaneous calls to a competing service provider.

3. *Other.* We are aware of three derivatives of RCF and DID, all of which require routing of all incoming calls to the terminating switch identified by the NXX code of the dialed phone number, and involve the loss of CLASS functionalities. Unlike RCF and DID, they use LEC tandem switches to aggregate calls to a particular competing service provider before those calls are routed to that provider. In addition, Cablevision Lightpath advocates use of Trunk Route Indexing (TRI), which it claims routes calls directly to the competitor's interconnection facilities and supports CLASS features. Finally, Directory Number Route Indexing (DNRI) is a method which first routes incoming calls to the switch to which the NPA–NXX code originally was assigned. DNRI then routes ported calls to the new service either through a direct trunk or by attaching a temporary ''pseudo NPA'' to the number and using a tandem, depending on availability.

Note: This Appendix C will not be published in the Code of Federal Regulations.

Appendix C—Implementation Schedule

Implementation must be completed by the carriers in the relevant MSAs during the periods specified below:

10/97–12/97	
Chicago, IL	3
Philadelphia, PA	4
Atlanta, GA	8
New York, NY	2
Los Angeles, CA	1
Houston, TX	7
Minneapolis, MN	12
1/98–3/98	
Detroit, MI	6
Cleveland, OH	20
Washington, DC	5
Baltimore, MD	18
Miami, FL	24
Fort Lauderdale, FL	39
Orlando, FL	40
Cincinnati, OH	30
Tampa, FL	23
Boston, MA	9
Riverside, CA	10
San Diego, CA	14
Dallas, TX	11
St. Louis, MO	16
Phoenix, AZ	17
Seattle, WA	22
4/98–6/98	
Indianapolis, IN	34
Milwaukee, WI	35
Columbus, OH	38
Pittsburgh, PA	19
Newark, NJ	25
Norfolk, VA	32
New Orleans, LA	41
Charlotte, NC	43
Greensboro, NC	48
Nashville, TN	51
Las Vegas, NV	50
Nassau, NY	13
Buffalo, NY	44
Orange Co, CA	15
Oakland, CA	21
San Francisco, CA	29
Rochester, NY	49
Kansas City, KS	28
Fort Worth, TX	33
Hartford, CT	46
Denver, CO	26
Portland, OR	27
7/98–9/98	
Grand Rapids, MI	56
Dayton, OH	61
Akron, OH	73
Gary, IN	80
Bergen, NJ	42
Middlesex, NJ	52
Monmouth, NJ	54
Richmond, VA	63
Memphis, TN	53
Louisville, KY	57
Jacksonville, FL	58
Raleigh, NC	59
West Palm Beach, FL	62
Greenville, SC	66
Honolulu, HI	65
Providence, RI	47
Albany, NY	64
San Jose, CA	31
Sacramento, CA	36
Fresno, CA	68
San Antonio, TX	37
Oklahoma City, OK	55
Austin, TX	60
Salt Lake City, UT	45
Tucson, AZ	71
10/98–12/98	
Toledo, OH	81
Youngstown, OH	85
Ann Arbor, MI	95
Fort Wayne, IN	100
Scranton, PA	78
Allentown, PA	82
Harrisburg, PA	83
Jersey City, NJ	88
Wilmington, DE	89
Birmingham, AL	67
Knoxville, KY	79
Baton Rouge, LA	87
Charleston, SC	92
Sarasota, FL	93
Mobile, AL	96
Columbia, SC	98
Tulsa, OK	70
Syracuse, NY	69
Springfield, MA	86
Ventura, CA	72
Bakersfield, CA	84
Stockton, CA	94
Vallejo, CA	99
El Paso, TX	74
Little Rock, AR	90
Wichita, KS	97
New Haven, CT	91
Omaha, NE	75
Albuquerque, NM	76
Tacoma, WA	77

[FR Doc. 96–18477 Filed 7–24–96; 8:45 am]

BILLING CODE 6712–01–P

DEPARTMENT OF TRANSPORTATION

Research and Special Programs Administration

49 CFR Part 172

[Docket HM–216; Amdt No. 172–148]

RIN 2137–AC66

Transportation of Hazardous Materials by Rail; Miscellaneous Amendments; Response to Petitions for Reconsideration

AGENCY: Research and Special Programs Administration (RSPA), DOT.

ACTION: Final rule; Response to petitions for reconsideration.

SUMMARY: RSPA is publishing a June 28, 1996 letter in which it denied petitions for reconsideration of a provision in the June 5, 1996 final rule in this proceeding which allowed rail shippers and carriers to discontinue use of the RESIDUE placard on June 30, 1996, three months in advance of the effective date of the June 5 final rule.

DATES: *Effective date:* The effective date for the final rule published under

Docket HM–216 on June 5, 1996 (61 FR 28666) remains October 1, 1996.

Compliance date: Voluntary compliance with the regulations, as amended in the final rule under Docket HM–216 on June 5, 1996, remains June 30, 1996.

FOR FURTHER INFORMATION CONTACT: Beth Romo, telephone (202) 366– 8553, Office of Hazardous Materials Standards, Research and Special Programs Administration, Washington, DC 20590–0001, or James H. Rader, telephone (202) 366–0510, Office of Safety Assurance and Compliance, Federal Railroad Administration, Washington, DC 20590–0001.

SUPPLEMENTARY INFORMATION: On June 6, 1996, RSPA published a final rule which amended the Hazardous Materials Regulations to incorporate a number of changes to rail requirements. The effective date of the rule is October 1, 1996, but compliance with all of the changes made in the rule was permitted beginning June 30, 1996. RSPA received several petitions for reconsideration concerning one provision of the June 5, 1996 final rule allowing rail shippers and carriers to discontinue use of the RESIDUE placard on June 30, 1996. On June 28, 1996, RSPA denied the petitions for reconsideration in a letter which has been sent to each petitioner, each party writing in support of the petitions for reconsideration, and each party who submitted comments on the original proposal to discontinue use of the RESIDUE placard. The letter of denial included a statement of enforcement policy by the Federal Railroad Administration (FRA). This document publishes verbatim the letter of denial and FRA enforcement policy as follows:

June 28, 1996

By Facsimile

Mr. Charles Keller, Director, Bureau of Explosives, Association of American Railroads, 80 F Street, NW., Washington, DC 20001–1564

Mr. Jean Ouellette, Chairman, Dangerous Goods Subcommittee, Railway Association of Canada, 800 René-Lévesque Blvd. West, Suite 1105, Montreal, Quebec H3B 1X9, Canada.

Gentlemen: The Research and Special Programs Administration (RSPA) denies your petitions for reconsideration—and similar petitions submitted by the other parties identified below—of the provision in RSPA's final rule in Docket HM–216 that allows rail shippers and carriers to discontinue use of the ''RESIDUE'' placard on June 30, 1996.

The final rule in Docket HM–216 eliminates use of a ''RESIDUE'' placard, currently required only for the transportation of the residue of a hazardous material in a tank car. 49 C.F.R. 172.510, 172.526. See 61 FR 28666, 28667–68, 28676 (June 5, 1996). This change is effective on October 1, 1996; however, voluntary compliance with this change, and the other amendments made in HM–216 to the Hazardous Materials Regulations (HMR), 49 C.F.R. Parts 171–180, is authorized on June 30, 1996. 61 Fed. Reg. 28666. In the absence of this June 30 voluntary compliance date, rail shippers and carriers would be required to continue use of the ''RESIDUE'' placard until September 30, 1996, and then begin using (on tank cars holding only a residue of a hazardous material) the placard required for a tank car containing a full load of the applicable hazardous material with respect to shipments on and after October 1, 1996.

In a June 14, 1996 facsimile memorandum, the Association of American Railroads (AAR) petitioned RSPA to postpone the June 30, 1996 voluntary compliance date for elimination of the ''RESIDUE'' placard until September 1, 1996. AAR stated that, with the June 30, 1996 voluntary compliance date, shippers could discontinue using the ''RESIDUE'' placard before rail carriers had sufficient time before June 30 to issue instructions and train their personnel with regard to this change. AAR cautioned that the lack of time to train rail carrier personnel would create ''a very real chance that tank cars will be delayed due to crew confusion, a situation that is not in the interest of safety.''

Similar petitions for reconsideration were also submitted by the Burlington Northern Santa Fe Railroad (BNSF), Consolidated Rail Corporation, the Illinois Central Railroad, and the Norfolk Southern Corporation (NS). In addition, CSX Transportation Company, the Kansas City Southern Railway, the Soo Line Railroad, and the Union Pacific Railroad expressed support for AAR's petition. BNSF and NS also stated that the June 30 voluntary compliance date did not allow sufficient time to make changes to their computer programming systems.

In a June 18, 1996 letter, the Railway Association of Canada (RAC) asked RSPA to postpone the elimination of the ''RESIDUE'' placard ''until a harmonization of all train marshaling rules in both the United States and Canada can be achieved'' or, in the alternative, until September 1, 1996, as requested by AAR. RAC stated that the June 30 voluntary compliance date did not allow sufficient time for training personnel and modifying computer systems. RAC expressed concern that there would be ''delays to hazardous materials traffic due to confusion by the train crews.'' Requests similar to that of RAC were submitted by the Canadian National Railroad and the Canadian Fertilizer Institute. The Canadian Chemical Producers'' Association (CCPA) wrote in support of RAC's request.

In a June 24, 1996 letter, the Chemical Manufacturers Association (CMA) expressed ''qualified support for the recent petitions for reconsideration submitted by'' AAR and CCPA, but suggested that RSPA not allow shippers to discontinue use of the ''RESIDUE'' placard before October 1, 1996. CMA stated that its concerns about insufficient time for training rail carrier personnel and ''confusion and safety concerns among the emergency response community'' would also exist during a September 1–October 1 ''voluntary compliance window.'' CMA also stated its assumption that RSPA would ''address enforcement-related issues for empty tank cars placarded as a residue which are in-transit at the time of the effective date of the rule.''

RSPA does not believe the concerns expressed by these parties justify postponement of the June 30, 1996 voluntary compliance date. Between June 30 and October 1, 1996, a tank car containing the residue of a hazardous material may bear ''RESIDUE'' placards or the placards that were required to be affixed to the tank car when it was full. On and after October 1, 1996, the ''RESIDUE'' placard may no longer be used, and the ''loaded'' car placard is required for a tank car containing a residue.

From the standpoint of rail operations, train placement of the car is the only difference between treatment of a tank car fully loaded with a hazardous material and one containing a residue. 49 C.F.R. § 174.85. The discontinuance of the ''RESIDUE'' placard simply means that train placement must be done based on the shipping paper (or electronic data interchange, as discussed in comments submitted in HM–216, see 61 FR at 28669). RSPA understands that this is generally the present means of car placement (rather than relying on the placard). Therefore, the major ''training'' needed is to inform rail carrier employees that an apparently misplaced tank car may in fact be properly placed and that the shipping papers will resolve that fact. Because the HMR's underlying rules on train placement have not changed, there is no reason to postpone discontinuance of the ''RESIDUE'' placard until a later proceeding to consider harmonization of the HMR with Canadian regulations in this respect.

A fundamental reason for allowing voluntary compliance before the effective date is to provide time for carriers to train their employees about this change, during the three-month voluntary compliance period, rather than requiring adherence to the ''old'' rules until the eve of the effective date. Allowing voluntary compliance here is consistent with RSPA's past practice in amending the HMR, including the extensive changes in packaging authorizations and hazard communications made in Docket No. HM–181. See 55 FR 52402 (Dec. 21, 1990) (voluntary compliance allowed beginning January 1, 1991, eleven days after publication of the final rule).

Both RSPA and the Federal Railroad Administration (FRA) envision the three-month voluntary compliance period as allowing rail carriers to ''debug'' their systems, both with respect to operating personnel and computer programs. Accordingly, FRA has developed a policy that will consider this as a ''learning'' period. A copy is attached. This policy should allow rail carriers to modify their computer programming systems during the three-month transition period.

For the above reasons, RSPA is denying these petitions for reconsideration.

Sincerely,

[signed]

Kelley S. Coyner,

Deputy Administrator.

Attachment

cc: Mr. David E. Edington, Manager, Hazardous Materials, Burlington Northern Santa Fe Railroad
Mr. J.R. McNally, General Manager, Hazardous Materials Systems, Consolidated Rail Corporation
Mr. Steve H. Huff, Director Operating Practices, Hazardous Materials/Special Services, CSX Transportation
Mr. Michael A. De Smedt, Manager Hazardous Materials Transportation, Illinois Central Railroad
Mr. J.W. Talley, Superintendent of Hazardous Materials Control, The Kansas City Southern Railway Company
Mr. D.L. Schoendorfer, Manager Hazardous Materials, Norfolk Southern Corporation, Environmental Protection
Mr. Phillip Marbut, Field Manager Hazardous Materials & Emergency Response, Soo Line Railroad Company
Pat Student, Manager, Technical Research, Chemical Transportation Safety, Union Pacific Railroad Company
Mr. Achille P. Ferrusi, Assistant Vice President, Safety & Regulatory Affairs, Canadian National
Mr. David M. Finlayson, Canadian Chemical Producers' Association
Mr. Jim Farrell, Manager, Technical Affairs, Canadian Fertilizer Institute
Mr. Frank J. Principi, Associate Director, Distribution Safety & Economic Programs, Chemical Manufacturers Association.

Explanation of FRA Enforcement Policy

Elimination of the ''Residue'' Placard, Placard Notation, and Placard Endorsement

On June 5, 1996, the Research and Special Programs Administration (RSPA) published a final rule in docket HM–216 (61 FR 28665). The final rule amended the Hazardous Materials Regulations (HMR) to incorporate a number of changes based on petitions from the railroad and shipping industries and on RSPA's own initiative. In order to facilitate an early transition form the pre-HM–216 regulations to the new standards, FRA is making this statement of enforcement policy with respect to the elimination of the placard notation, endorsement, and RESIDUE placard. This policy statement does not alter or add to the final rule, but offers guidance to railroads and shippers concerning the voluntary compliance period.

First, FRA will continue to expect accurate shipping descriptions during and after the transition period.

Second, FRA will continue to expect that the placard on a rail shipment of a hazardous material will accurately reflect the class of the commodity in the car and, if the identification numbers appear on the placard, that they will be accurate.

Third, FRA will expect shippers to offer tank cars consistently placarded, for example, if a RESIDUE placard is displayed at one location, the other three locations will also display RESIDUE placards.

Fourth, FRA will expect shippers to discontinue use of the RESIDUE placard after September 30, 1996, although cars offered before that date may continue their transportation cycle back to the loading point with RESIDUE placards.

Fifth, FRA expects railroads and shippers to train their employees about the new requirements to ensure an orderly transition before October 1, 1996. FRA believes that this phase-in period will help railroads and shippers ''de-bug'' automated systems such as electronic data interchange programs before the mandatory deadline.

FRA is aware that some entities are concerned that, during the voluntary compliance period, a shipping document may carry the RESIDUE placard notation (e.g., Placarded: Flammable—RESIDUE) while the car displays the traditional ''loaded'' placard. As noted above, if the shipping description is accurate and the placards are for the correct class (and carry the correct UN/NA number as appropriate), FRA will take no exception. Further, the final rule in this docket eliminates the requirement for the placard endorsement and notation, but does not prohibit their use. Shippers and carriers may continue to use this information, and to display it on shipping and movement documents, as they wish.

FRA and RSPA are aware of the problems created when regulatory changes require many companies in different industries to change their procedures and processes. We intend to be flexible in achieving full compliance and we urge the shipping and transporting companies involved to work with each other towards the enhancements in Docket HM–216. For example, shipping and transportation companies may mutually agree on a date prior to October 1, 1996 by which they will implement the changes recently published.

During the transition period for implementing requirements based on the UN Recommendations (Docket HM–181), RSPA adopted regulations in § 171.14 (popularly called ''mix & match''), that recognized the impossibility of bringing everything into phase at one instant. FRA will enforce the rules promulgated in Docket HM–216 in the same spirit.

For further information contact James H. Rader (Telephone 202–366–0510), Hazardous Materials Division; Thomas A. Phemister (Telephone 202–366–0635), Trial Attorney, Office of Chief Counsel, FRA, Washington D.C. 20590–0001.

Office of Safety Assurance and Compliance

June 27, 1996

Issued in Washington, DC, on July 18, 1996, under authority delegated in 49 CFR part 1.

Alan I. Roberts,

Associate Administrator for Hazardous Materials Safety.

[FR Doc. 96–18822 Filed 7–24–96; 8:45 am]

BILLING CODE 4910–60–P

Federal Railroad Administration

49 CFR Part 209

RIN 2130–AB00

Federal Railroad Administration Enforcement of the Hazardous Materials Regulations: Penalty Guidelines

AGENCY: Federal Railroad Administration (FRA), Department of Transportation (DOT).

ACTION: Policy statement; final rule.

SUMMARY: FRA is publishing the penalty guideline amounts it uses in initial determinations of proposed civil penalty assessments for documented violations of DOT's Hazardous Materials Regulations. This action will make those against whom FRA enforces the Hazardous Materials Regulations more aware of the potential consequences for documented violations. FRA intends the publication of these penalty guidelines to increase compliance with the Hazardous Materials Regulations and, thereby, to enhance safety. FRA is also revising its enforcement procedures to reflect the current statutory minimum and maximum penalties for violations of the Federal hazardous materials transportation safety laws.

EFFECTIVE DATE: These guidelines, and the final rule amendments, are effective July 25, 1996.

FOR FURTHER INFORMATION CONTACT: Raymond V. Kasey, Hazardous Materials Specialist, Office of Safety Assurance and Compliance, (202) 366–6769; or Thomas A. Phemister, Trial Attorney, Office of the Chief Counsel, (202) 366–0628, Federal Railroad Administration, U.S. Department of Transportation, 400 Seventh Street, S.W., Washington, D.C. 20590.

SUPPLEMENTARY INFORMATION: FRA promulgates and enforces regulations implementing the Federal railroad safety laws, 49 U.S.C. 20101 *et seq.*; 49 CFR 1.49, Parts 209, 213–240. For railroads and those who ship hazardous materials by railroad, FRA enforces regulations implementing the Federal hazardous materials transportation safety laws, 49 U.S.C. 5101 *et seq.*; 49 CFR 1.49(s), 107, 171–180. FRA works with its partner DOT agency, the Research and Special Programs Administration (RSPA), in the promulgation of railroad-oriented regulations implementing the Federal hazardous materials transportation law.

In all areas of its railroad safety enforcement authority except hazardous materials, FRA's traditional practice has been to issue a penalty schedule

assigning to each particular regulation specific dollar amounts for initial penalty assessments. The schedules generally constitute a statement of agency policy and are ordinarily issued as an appendix to the relevant part of the Code of Federal Regulations. The same has not been true for FRA's enforcement of the Hazardous Materials Regulations against railroads and those who ship by rail. Two main reasons supported this policy. First, the Research and Special Programs Administration (RSPA), in partnership with FRA, issues the Hazardous Materials Regulations promulgated by the Department. On March 6, 1995, RSPA published its own penalty guidelines (60 FR 12139), taking an appropriate lead in this area. The guidelines issued by FRA today complement RSPA's penalty guidelines, which together provide clear direction to carriers and shippers in this unique intermodal area. Second, the nature of hazardous materials transportation is such that a simple penalty schedule (a violation of § X equates to a penalty of $Y), as used by FRA in most other areas of its enforcement activities, can only cover the broad categories of violation and does not account for the vast differences in the hazards between, for instance, liquefied carbon dioxide and hydrocyanic acid. With the publication of the guidelines in this document, FRA believes it has given its customers counsel and direction that a mere schedule of monetary penalties cannot convey.

Following discussions among the administrations and in response to a request contained in Senate Report 103–150 that accompanied the Department of Transportation and Related Agencies Appropriations Act, 1994, FRA has decided to publish an additional appendix to its enforcement procedures at 49 CFR Part 209. Appendix A—Statement of Agency Policy Concerning Enforcement of the Federal Railroad Safety Laws—will continue as the fundamental repository of agency enforcement policy; Appendix B, published with this notice, will augment it with penalty guideline information specific to violations of the Hazardous Materials Regulations. FRA's customers in the regulated community will now be more aware of the specific potential civil penalty consequences of not following the regulations, and teams from FRA's Office of Safety Assurance and Compliance will have a flexible tool to foster consistency in their recommendations for civil penalties.

FRA does not necessarily take a formal enforcement action every time it discovers a deviation from the Federal railroad safety laws. Under the Safety Assurance and Compliance Program announced by FRA in 1995, FRA's efforts are focused on producing safety results, not imposing punishment. Many deficiencies can be corrected through a simple conversation between the inspector and the shipper or carrier personnel on scene. Correction of others may become the focus of FRA outreach meetings or may be worked into corporate safety action plans. However, when these efforts do not produce regulatory compliance and safe practices or when FRA decides that enforcement action is called for, it has a range of enforcement tools and has the authority to choose those best suited to the circumstances. One of these tools (the emergency order, under 49 U.S.C. 20104(a)) can be used to address an immediate hazard even if no existing law has been violated.

Wide discretion in choosing the means of enforcement calls for general guidelines to ensure effectiveness, fairness, and an acceptable level of consistency. The purpose of guidelines is not to dictate absolutely identical treatment of identical situations; that would be an unrealistic ideal based on the false assumption that each of the many variables going into an enforcement decision could objectively and accurately be quantified. Instead, the purpose of the agency's hazardous materials civil penalty guidelines is to control the necessarily subjective elements of this process as much as is feasible by requiring that those making enforcement decisions weigh the same factors and make full use of objective information bearing on those factors. In this way, the appropriate enforcement tool is applied, responsible discretionary judgments are made, and an acceptable level of consistency in similar situations is achieved.

FRA's Statement of Agency Policy Concerning Enforcement of the Federal Railroad Safety Laws (49 CFR Part 209, Appendix A) stresses that discretion begins at the field and regional levels: Inspectors make initial determinations on the need for enforcement action, and regional specialists play an active role in reviewing those determinations with an eye toward effectiveness and consistency. Office of Safety Assurance and Compliance headquarters personnel are responsible for spotting national trends in the data that require enforcement action and for providing guidance to the regional and field staffs on difficult enforcement policy issues.

FRA's policy statement sets forth seven factors to be considered in making enforcement decisions:

- The inherent seriousness of the condition or action.
- The kind and degree of potential safety hazard the condition or action poses in light of the immediate factual situation.
- Any actual harm to persons or property already caused by the condition or action.
- The offending person's general level of current compliance as revealed by the inspection as a whole.
- The person's recent history of compliance with the relevant set of regulations, especially at the specific location (or division of the railroad involved).
- Which enforcement remedy is most appropriate under the circumstances.
- Such other factors as the immediate circumstances make relevant.

Just as there are a series of considerations that inform the decision to take enforcement action, so there are considerations to be applied to determining the amount of a civil penalty. By statute, the following are considered: (a) The nature, circumstances, extent, and gravity of the violation; (b) with respect to the violator, the degree of culpability, any history of violations, the ability to pay, and any effect on the ability to continue to do business; and (c) other matters as justice requires. (49 U.S.C. §§ 5123(c) and 21301(a)(3).) FRA has developed penalty guidelines for hazardous materials cases to aid in applying these assessment criteria at the initial penalty assessment stage, based on the information known about a particular case. Because the guidelines in this notice are merely a general statement of agency policy and practice, are non-binding, and are periodically updated, they are being published as an informational appendix to FRA's enforcement regulations, as Appendix B to 49 CFR Part 209. They are published without public notice or comment because they are merely informational, are not finally determinative of any issues or rights, and do not have the force of law. For a discussion of relevant case law, see the preamble to RSPA's publication of its penalty guidelines, 60 FR 12139.

The guidelines published in this notice are a preliminary assessment tool used by FRA personnel, and they create no rights in any party. They contain baseline amounts for violations that frequently have been cited by FRA hazardous materials inspectors. When a violation not described in the guidelines is encountered, a new guideline is developed, typically by analogy to a similar violation in the guidelines. Their application is a starting point to

promote consistency. No two cases are identical. The baseline amount or range is an initial reflection of the nature, extent, circumstances, and gravity of the violation as compared with other types of violations. The FRA attorney can vary from the guidelines as necessary to reflect a case's particular facts. This notice publishes the guidelines as they existed on March 31, 1996; FRA plans to publish updated and revised guidelines from time to time.

A respondent receives the first notice that FRA may be seeking civil penalties when the FRA inspector informs him/her that a violation will be recommended. If the inspector's report is approved by the regional office and passes legal review in the Office of Chief Counsel, the respondent will receive a *Notice of Probable Violation* (NOPV) in which a charge of violation is made, accompanied by a summary of the alleged violations and the penalty amounts FRA proposes. A separate document sent with the NOPV lists the respondent's three options: Pay the penalty proposed, seek an informal conference, or request a formal hearing before a hearing officer. The election to pursue informal resolution does not preclude respondent from later seeking a formal hearing.

During the informal resolution process, the respondent and the FRA attorney assigned to the case review any defenses or mitigating information presented. The new information presented and arguments made since the initial penalty assessment often leads to a re-evaluation of the penalty in light of statutory considerations. One very important factor is any remedial action taken by the respondent to prevent a recurrence of similar violations. Following discussions between the FRA attorney and the respondent, they typically reach an agreement on the amount of penalty, if any, to be paid. FRA's findings of fact and the agreement on the penalty amount are then memorialized in an Order Assessing Civil Penalty. The respondent pays the penalty, and the case is closed. Under FRA's procedures, the respondent who will not agree to a compromise settlement can request a formal hearing.

If the respondent makes such a request, the matter is assigned to a hearing officer who hears both sides and renders a decision. FRA retains the right to amend its NOPV prior to hearing and to seek the maximum statutory amount for each violation. If the decision is against the respondent, the hearing officer is bound only by the statutory maximum and minimum civil penalty amounts and the statutory penalty considerations.

To summarize, the FRA guidelines consist of a listing of violations and the baseline penalty, or range of penalties, proposed for each as of March 31, 1996. The guidelines presuppose flexibility in their application, and FRA proposes to re-publish the then-current guidelines as appropriate.

The Hazardous Materials Transportation Uniform Safety Act of 1990 (P.L. 101–615), March 16, 1990) amended the penalty provisions for violations of the Federal hazardous materials transportation safety laws. The maximum penalty had been $10,000; the 1990 Act increased it to $25,000 and established a minimum of $250. Accordingly, FRA is amending the statutory references and minimum and maximum penalty amounts in its enforcement procedures to reflect current law. FRA also clarifies that its authority to amend an NOPV at any time prior to issuance of an order includes authority to amend the proposed penalty to the statutory maximum. Finally, FRA makes technical amendments to reflect recodification of the Federal railroad safety laws by Pub. L. 103–272. These amendments affect 49 CFR 209.101, 209.103, 209.105, 209.131, 209.133, and 209.201.

Rulemaking Analyses and Notices

Executive Order 12866 and DOT Regulatory Policies and Procedures

This final rule is not considered a significant regulatory action under section 3(f) of Executive Order 12866. This rule is not significant under the Regulatory Policies and Procedures of the Department of Transportation (44 FR 11034). The economic impact of this final rule is minimal to the extent that preparation of a regulatory evaluation is not warranted.

Executive Order 12612

This final rule merely updates recodified statutory references in a portion of the CFR; no requirements are changed as a result. The policy statement is an informational appendix and imposes no requirements. Thus, preparation of a federalism assessment is not warranted.

Regulatory Flexibility Act

I certify that this final rule will not have a significant economic impact on a substantial number of small entities. This rule applies to shippers of hazardous materials by railroad, to manufacturers of packagings used for the transportation of hazardous materials by railroad, and to railroads. Some of these are small entities; however, there will be no significant economic impact.

Paperwork Reduction Act

There are no new information requirements in this final rule.

List of Subjects in 49 CFR Part 209

Administrative practices and procedure, Hazardous materials transportation, Penalties, Reporting and recordkeeping requirements.

In consideration of the foregoing, 49 CFR Part 209 is amended as follows:

PART 209—RAILROAD SAFETY ENFORCEMENT PROCEDURES

1. The authority citation for part 209 continues to read as follows:

Authority: 49 U.S.C. Chs. 51, 57, 201, and 213; 49 CFR 1.49.

2. Section 209.101(a) is revised to read as follows:

§ 209.101 Civil penalties generally.

(a) Sections 209.101 through 209.121 prescribe rules of procedure for the assessment of civil penalties pursuant to the Federal hazardous materials transportation safety law, 49 U.S.C. Chapter 51.

* * * * *

3. Section 209.103 is revised to read as follows:

§ 209.103 Minimum and maximum penalties.

A person who knowingly violates a requirement of subchapter A or C of chapter I, Subtitle B of this title is liable for a civil penalty of at least $250 but not more than $25,000 for each violation. When the violation is a continuing one, each day of the violation constitutes a separate offense. 49 U.S.C. 5123.

4. Section 209.105 is amended by revising paragraphs (a) and (c) to read as follows:

§ 209.105 Notice of probable violation.

(a) FRA, through the Chief Counsel, begins a civil penalty proceeding by serving a notice of probable violation on a person charging him or her with having violated one or more provisions of subchapter A or C of chapter I, subtitle B of this title. Appendix B to this part contains guidelines used by the chief counsel in making initial penalty assessments.

* * * * *

(c) The FRA may amend the notice of probable violation at any time prior to the entry of an order assessing a civil penalty. If the amendment contains any

new material allegation of fact, the respondent is given an opportunity to respond. In an amended notice, FRA may change the penalty amount proposed to be assessed up to and including the maximum penalty amount of $25,000 for each violation.

5. Section 209.131 is revised to read as follows:

§ 209.131 Criminal penalties generally.

The Federal hazardous materials transportation safety laws (49 U.S.C. 5124) provide a criminal penalty of a fine under title 18, United States Code, and imprisonment for not more than 5 years, or both, for any person who knowingly violates 49 U.S.C. 5104(b) or who willfully violates chapter 51 of title 49, United States Code, or a regulation prescribed or order issued under that chapter.

6. Section 209.133 is revised to read as follows:

§ 209.133 Referral for prosecution.

If an inspector, including a certified state inspector under Part 212 of this chapter, or other employee of FRA becomes aware of a possible willful violation of the Federal hazardous materials transportation safety laws (49 U.S.C. Chapter 51) or a regulation issued under those laws for which FRA exercises enforcement responsibility, he or she reports it to the Chief Counsel. If evidence exists tending to establish a prima facie case, and if it appears that assessment of a civil penalty would not be an adequate deterrent to future violations, the Chief Counsel refers the report to the Department of Justice for criminal prosecution of the offender.

7. Section 209.201 is revised to read as follows:

§ 209.201 Compliance orders generally.

(a) This subpart prescribes rules of procedure leading to the issuance of compliance orders pursuant to the Federal railroad safety laws at 49 U.S.C. 5121(a) and/or 20111(b).

(b) The FRA may commence a proceeding under this subpart when FRA has reason to believe that a person is engaging in conduct or a pattern of conduct that involves one or more violations of the Federal railroad safety laws or any regulation or order issued under those laws for which FRA exercises enforcement authority.

8. Appendix B is added to Part 209 to read as follows:

Appendix B to Part 209—Federal Railroad Administration Guidelines for Initial Hazardous Materials Assessments

These guidelines establish benchmarks to be used in determining initial civil penalty assessments for violations of the Hazardous Materials Regulations (HMR). The guideline penalty amounts reflect the best judgment of the FRA Office of Safety Assurance and Compliance (RRS) and of the Safety Law Division of the Office of Chief Counsel (RCC) on the relative severity, on a scale of $250 to $25,000, of the various violations routinely encountered by FRA inspectors. (49 U.S.C. 5123) Unless otherwise specified, the guideline amounts refer to average violations, that is, violations involving a hazardous material with a medium level of hazard, and a violator with an average compliance history. In an ''average violation,'' the respondent has committed the acts due to a failure to exercise reasonable care under the circumstances (''knowingly''). For some sections, the guidelines contain a breakdown according to relative severity of the violation, for example, the guidelines for shipping paper violations at 49 CFR §§ 172.200–.203. *All* penalties in these guidelines are subject to change depending upon the circumstances of the particular case. The general duty sections, for example §§ 173.1 and 174.7, are not ordinarily cited as separate violations; they are primarily used as explanatory citations to demonstrate applicability of a more specific section where applicability is otherwise unclear.

FRA believes that infractions of the regulations that lead to personal injury are especially serious; this is directly in line with Department of Transportation policy that hazardous materials are only safe for transportation when they are securely sealed in a proper package. (Some few containers, such as tank cars of carbon dioxide, are designed to vent off excess internal pressure. They are exceptions to the ''securely sealed'' rule.) ''Personal injury'' has become somewhat of a term of art, especially in the fields of occupational safety and of accident reporting. To avoid confusion, these penalty guidelines use the notion of ''human contact'' to trigger penalty aggravation. In essence, *any* contact by a hazardous material on a person during transportation is a per se injury and proof will not be required regarding the extent of the physical contact or its consequences. When a violation of the Hazardous Materials Regulations *causes* a death or serious injury, the maximum penalty of $25,000 shall always be assessed initially.

These guidelines are a preliminary assessment tool for FRA's use. They create no rights in any party. FRA is free to vary from them when it deems appropriate and may amend them from time to time without prior notice. Moreover, FRA is not bound by any amount it initially proposes should litigation become necessary. In fact, FRA reserves the express authority to amend the NOPV to seek a penalty of up to $25,000 for each violation at any time prior to issuance of an order.

Penalty Assessment Guidelines

Emergency orders		Guideline
EO16	Penalties for violations of EO16 vary depending on the circumstances	5,000
EO17	Penalties for violations of EO17 vary depending on the circumstances	([1])
	Failure to file annual report	5,000

[1] Varies.

49 CFR section	Description	Guideline
	PART 107	
107.608	Failure to register or to renew registration. (Note: registration—or renewal—is mitigation.)	1,000
	PART 171	
171.2(c)	Representing (marking, certifying, selling, or offering) a packaging as meeting regulatory specification when it does not.	8,000
171.2(f)(2)	Billing, marking, etc. for the presence of HM when no HM is present. (Mitigation required for shipments smaller than a carload, i.e., single drum penalty is 1,000).	2,000
171.12	Import shipments—Importer not providing shipper and forwarding agent with US requirements. Cannot be based on inference.	4,000
	Import shipments—Failure to certify by shipper or forwarding agent	2,000
171.15	Failure to provide immediate notice of certain hazardous materials incidents	6,000

49 CFR section	Description	Guideline
171.16	Failure to file incident report (form DOT 5800.1). (Note: Multiple failures will aggravate the penalty; see the expert attorney.).	4,000
	PART 172	
Shipping Papers:		
172.200—.203	Offering hazardous materials for transportation when the material is not properly described on the shipping paper as required by §§ 172.200—.203. (The ''shipping paper'' is the document tendered by the shipper/offeror to the carrier. The original shipping paper contains the shipper's certification at § 172.204.).	
	—Information on the shipping paper is wrong to the extent that it caused or materially contributed to a reaction by emergency responders that aggravated the situation or caused or materially contributed to improper handling by the carrier that led to or materially contributed to a product release.	15,000
	—Total lack of hazardous materials information on shipping paper. (Some shipping names alone contain sufficient information to reduce the guideline to the next lower level, but they may be such dangerous products that aggravation needs to be considered.).	7,500
	—Some information is present but the missing or improper description could cause mishandling by the carrier or a delay or error in emergency response.	5,000
	—When the improper description is not likely to cause serious problem (technical defect)	2,000
	—Shipping paper includes a hazardous materials description and no hazardous materials are present.	7,500
	Note: Failure to include emergency response information is covered at §§ 172.600–604; while the normal unit of violation for shipping papers is the whole document, failure to provide emergency response information *is* a separate violation.	
172.204	Shipper's failure to certify	2,000
172.205	Hazardous waste manifest. (Applies only to defects in the Hazardous Waste Manifest form [EPA Form 8700–22 and 8700–22A]; shipping paper defects are cited and penalized under § 172.200–.203.).	4,000
Marking	The guidelines for ''marking'' violations contemplate a total lack of the prescribed mark. Obviously, where the package (including a whole car) is partially marked, mitigation should be applied.	
172.301	Failure to mark a non-bulk package as required (e.g., no commodity name on a 55-gallon drum). (Shipment is the unit of violation.).	1,000
172.302	Failure to follow standards for marking bulk packaging. (Note: If a more specific section applies, cite it and its penalty guideline.).	2,000
172.302(a)	ID number missing or in improper location. (The guideline is for a portable tank; for smaller bulk packages, the guideline should be mitigated downward.).	2,500
172.302(b)	Failure to use the correct *size* of markings. (Note: If § 172.326(a) is also cited, it takes precedence and .302(b) is not cited. Note also: the guideline is for a gross violation of marking size—½'' where 2'' is required—and mitigation should be considered for markings approaching the required size.).	2,000
172.302(c)	Failure to place exemption number markings on bulk package	2,000
172.303	Prohibited marking. (Package is marked for a hazardous material and contains either another hazardous material or no hazardous material.)	
	—The marking is wrong and caused or contributed to a wrong emergency response	10,000
	—Inconsistent marking; e.g., Shipping name and ID number do not agree	5,000
	—Marked as a hazardous material when package does not contain a hazardous material	2,000
172.313	''Inhalation Hazard'' not marked	2,500
172.322	Failure to mark for MARINE POLLUTANT where required	1,500
172.325(a)	Improper, or missing, HOT mark for elevated temperature material	1,500
172.326(a)	Failure to mark a portable tank with the commodity name	2,500
172.326(b)	Owner's/lessee's name not displayed	500
172.326(c)	Failure to mark portable tank with ID number	2,500
172.330(a)(1)(i)	Offering/transporting hazardous materials in a tank car that does not have the required shipping name or common name stenciled on the car; include reference to section requiring stenciling, such as § 173.314(b) (5) or (6).	2,500
172.330(a)(1)(ii)	Offering/transporting hazardous materials in a tank car that does not have the required ID number displayed on the car.	2,500
172.331(b)	Offering bulk packaging other than a portable tank, cargo tank, or tank car (e.g., a hopper car) not marked with UN/NA number. (I.e., a hopper car carrying a hazardous substance, where a placard is not required).	2,500
172.332	Improper display of identification number markings. Note: Citation of this section and §§ 172.326 (portable tanks), 172.328 (cargo tanks), or 172.330 (tank cars) does not create two separate violations.	2,000
172.334(a)	Displaying ID numbers on a RADIOACTIVE, EXPLOSIVES 1.1,1.2,1.3,1.4,1.5, or 1.6, or DANGEROUS, or subsidiary hazard placard.	4,000
172.334(b)	—Improper display of ID number that caused or contributed to a wrong emergency response	15,000
	—Improper display of ID number that could cause carrier mishandling or minor error in emergency response.	5,000
	—Technical error	2,000
172.334(f)	Displaying ID number on orange panel not in proximity to the placard	1,500
Labeling:		
172.400–.450	Failure to label properly. (See also § 172.301 regarding the marking of packages.)	2,500

49 CFR section	Description	Guideline
Placarding	The guidelines for ''placarding'' violations contemplate a total lack of the prescribed placard. Obviously, where the package (including a whole car) is partially placarded, mitigation should be applied.	
172.502	—Placarded as hazardous material when car does not contain a hazardous material	2,000
	—Placard does not represent hazard of the contents	2,000
	—Display of sign or device that could be confused with regulatory placard. Photograph or good, clear description necessary.	2,000
172.503	Improper display of ID number on placards. (Note: Do not cite this section; cite § 172.334.)	(1)
172.504(a)	Failure to placard; affixing or displaying wrong placard. (See also §§ 172.502(a), 172.504(a), 172.505, 172.510(c), 172.516, 174.33, 174.59, 174.69; all applicable sections should be cited, but the penalty should be set at the amount for the violation most directly in point.) (Generally, the car is the unit of violation, and penalties vary with the number of errors, typically at the rate of $1,000 per placard.)	
	—Complete failure to placard	7,500
	—One placard missing (add $1,000 per missing placard up to a total of three; then use the guideline above).	1,000
	— Complete failure to placard, but only 2 placards are required (e.g., intermediate bulk containers [IBCs]).	2,500
172.504(b)	Improper use of DANGEROUS placard for mixed loads	5,000
172.504(c)	Placarded for wrong hazard class when no placard was required due to 1,001 pound exemption	2,000
172.504(e)	Use of placard other than as specified in the table:	
	—Improper placard caused or contributed to improper reaction by emergency response forces or caused or contributed to improper handling by carrier that led to a product release.	15,000
	—Improper placard that could cause improper emergency response or handling by carrier	5,000
	—Technical violation	2,500
172.505	Improper application of placards for subsidiary hazards. (Note: This is in addition to any violation on the primary hazard placards.).	5,000
172.508(a)	Offering hazardous material for rail transportation without affixing placards. (Note: The preferred section for a total failure to placard is 172.504(a); only one section should be cited to avoid a dual penalty.) (Note also: Persons offering hazardous materials for rail movement must *affix* placards; if offering for highway movement, the placards must be *tendered* to the carrier. § 172.506.).	7,500
	Placards OK, except they were IMDG labels instead of 10″ placards. (Unit of violation is the packaging, usually a portable tank.).	500
	Placards on TOFC/COFC units not readily visible. (Note: Do not cite this section, cite § 172.516 instead.).	(2)
172.508(b)	Accepting hazardous material for rail transportation without placards affixed	5,000
172.510(a)	EXPLOSIVES 1.1, EXPLOSIVES 1.2, POISON GAS, POISON GAS-RESIDUE, (Division 2.3, Hazard Zone A), POISON, or POISON-RESIDUE (Division 6.1, Packing Group I, Hazard Zone A) placards displayed without square background.	5,000
172.510(c)	Improper use of RESIDUE placard.	
	—Placarded RESIDUE when loaded	4,000
	—Placarded loaded when car contains only a residue	1,000
	—Placarded EMPTY when RESIDUE is required	500
172.514	Improper placarding of bulk packaging other than a tank car: For the ''exception'' packages in 174.514(c). Note: Use the regular placarding sections for the guideline amounts for larger bulk packages.	2,000
172.516	Placard not readily visible, improperly located or displayed, or deteriorated. Good color photos ''essential'' to prove deterioration, and considerable weathering is permissible. Placard is the unit of violation.	1,000
	—When placards on an intermodal container are not visible, for instance, because the container is in a well car. Container is the unit of violation, and, as a matter of enforcement policy, FRA accepts the lack of visibility of the end placards.	2,000
Emergency Response Information.	Violations of §§ 172.600–.604 are in addition to shipping paper violations. In citing a carrier, if the railroad's practice is to carry an emergency response book or to put the E/R information as an attachment to the consist, the unit of violation is generally the train (or the consist). ''Telephone number'' violations are generally best cited against the shipper; if against a railroad, there should be proof that the number was given to the railroad, that is, it was on the original shipping document.	
172.600–.602	Where improper emergency response information has caused an improper reaction from emergency forces and the improper response has aggravated the situation. Note: Proof of this will be rigorous. For instance, if the emergency response forces had chemical information with the correct response and they relied, instead, on shipper/carrier information to their detriment; the $15,000 penalty guideline applies.	15,000
	Bad, missing, or improper emergency response information. (Be careful in transmitting violations of this section against a railroad; there are many sources of E/R information and it does not necessarily ''travel'' with the shipping documents.).	4,000
172.602(c)	Failure to have emergency response information ''immediately accessible''	15,000
172.604	Improper or missing emergency response telephone number	2,500
Training:		
172.702(a)	General failure to train hazmat employees	5,000
172.702(b)	Hazmat employee performing covered function without training. (Unit of violation is the employee; see the expert attorney if more than 10 employees are involved.).	1,000
172.704(a)	Failure to train in the required areas:	2,500
	—General awareness/familiarization	

49 CFR section	Description	Guideline
	—Function-specific	
	—Safety	
	(Unit of violation is the ''area,'' and, for a total failure to train, cite 172.702(a) and use that penalty instead of 172.704.)	
172.704(c)	Initial and recurrent training. (Note: Cite this and the relevant substantive section, e.g., 172.702(a), and use penalty provided there.).	([3])
172.704(d)	Failure to maintain record of training. (Unit of violation is the record.)	2,500
	PART 173	
173.1	General duty section applicable to shippers; also includes subparagraph (b), the requirement to train employees about applicable regulations. (Cite the appropriate section in the 172.700–.704 series for training violations.).	2,000
173.9(a)	Early delivery of transport vehicle that has been fumigated. (48 hours must have elapsed since fumigation.).	5,000
173.9(b)	Failure to display fumigation placard. (Ordinarily cited against shipper only, not against railroad.)	1,000
173.10	Delivery requirements for gases and for flammable liquids. See also 174.204 and 174.304	3,000
173.22	Shipper responsibility: This general duty section should ordinarily be cited only to support a more specific charge.	([4])
173.22a	Improper use of packagings authorized under exemption	2,500
	Failure to maintain copy of exemption as required.	1,000
173.24(b)(1) & 173.24(b)(2) and 173.24(f)(1) & 173.24(f)(1)(ii).	Securing closures: These subsections are the general ''no leak'' standard for all packagings. § 173.24(b) deals primarily with *packaging* as a whole, while § 173.24(f) focuses on *closures.* Cite the sections accordingly, using both the leak/non-leak criteria and the package size considerations to reach the appropriate penalty. Any actual leak will aggravate the guideline by, typically, 50%; a leak with contact with a human being will aggravate by at least 100%, up to the maximum of $25,000 if the HMR violation *causes* the injury. With tank cars, § 173.31(b) applies, and IM portable tanks [§ 173.32c], and other tanks of that size range, should use the tank car penalty amounts, stated in reference to that section.	
	—Small bottle or box	1,000
	—55-gallon drum	2,500
	—Larger container, e.g., IBC; not portable tank or tank car	5,000
173.24(c)	Use of package not meeting specifications, including required stencils and markings. The most specific section for the package involved should be cited (see below). The penalty guideline should be adjusted for the size of the container. Any actual leak will aggravate the guideline by, typically, 50%; a leak with contact with a human being will aggravate by at least 100%, up to the maximum of $25,000 if the HMR violation *causes* the injury.	
	—Small bottle or box	1,000
	—55-gallon drum	2,500
	—Larger container, e.g., IBC; not portable tank or tank car	5,000
	For more specific sections: Tank cars—§ 173.31(a), portable tanks—§ 173.32, and IM portable tanks—§§ 173.32a, .32b, and .32c, q.v	
173.24a(a)(3)	Non-bulk packagings: Failure to secure and cushion inner packagings	1,000
	—Causes leak	3,000
	—Leak with any contact between product and any human being	10,000
173.24a(b)&(d)	Non-bulk packagings: Exceeding filling limits	1,000
	—Causes leak	3,000
	—Leak with any contact between product and any human being	10,000
173.24b(a)	Insufficient outage:	3,000
	—<1%	
	—Causes leak	5,000
	—Leak with any contact between product and any human being	10,000
173.24b(a)(3)	Outage <5% on PIH material	5,000
	—Causes leak	7,500
	—Leak with any contact between product and any human being	10,000
173.26	Loaded beyond gross weight or capacity as stated in specification. (Applies only if quantity limitations do not appear in packaging requirements of Part 173.).	5,000
173.28	Improper reuse, reconditioning, or remanufacture of packagings.	1,000
173.29(a)	Offering residue tank car for transportation when openings are not tightly closed (§ 174.67(k) is also usually applicable). The regulation requires offering ''in the same manner as when'' loaded and may be cited when a car not meeting specifications (see § 173.31(a)(1)) is released back into transportation after unloading; same guideline amount. Guidelines vary with the type of commodity involved:	
	—Hazardous material with insignificant vapor pressure and without classification as ''poison'' or ''inhalation hazard''.	2,000
	—With actual leak	5,000
	—With leak allowing the product to contact any human being	15,000
	—Hazardous material with vapor pressure (essentially any gas or compressed gas) and/or with classification as ''poison'' or ''inhalation hazard.''.	5,000
	—With actual leak	7,500
	—With leak allowing the product (or fumes or vapors) to contact any human being. (In the case of fumes, the ''contact'' must be substantial.).	15,000
	—Where only violation is failure to secure a protective housing, e.g., the covering for the gaging device.	1,000

49 CFR section	Description	Guideline
173.30	A general duty section that should be cited with the explicit statement of the duty.	
173.31(a)(1)	Use of a tank car not meeting specifications and the ''Bulk packaging'' authorization in Column 8 of the § 172.101 Hazardous Materials Table reference is:	
	§ 173.240	1,000
	§ 173.241	2,500
	§ 173.242	5,000
	§ 173.243	5,000
	§ 173.244	7,500
	§ 173.245	7,500
	§ 173.247	1,000
	§ 173.314, .315	5,000
	—Minor defect not affecting the ability of the package to contain a hazardous material, e.g., no chain on a bottom outlet closure plug.	500
	Tank meets specification, but specification is not stenciled on car. Note: § 179.1(e) implies that only the builder has the duty here, but it is the presence of the stencil that gives the shipper the right to rely on the builder. (See § 173.22(a)(3).).	1,000
	Tank car not stenciled ''Not for flammable liquids,'' and it should be. (AAR Tank Car Manual, Appendix C, C3.03(a)5.)	
	—Most cars	2,500
	—Molten sulfur car	500
	—If flammable liquid is actually in the car	5,000
173.31(a)(4)	Use of a tank car stenciled for one commodity to transport another	5,000
173.31(a)(5)	Use of DOT-specification tank car without shelf couplers. (Note: prior to November 15, 1992, this did not apply to a car not carrying hazardous materials.).	10,000
	—Against a carrier, cite § 174.3 and this section	6,000
173.31(a)(6)	Use of non-DOT specification car without shelf couplers to carry hazardous materials. (Applies only since November 15, 1990.).	10,000
	—Against a carrier, cite § 174.3 and this section	6,000
173.31(a)(7)	Use of tank car without air brake support attachments welded to pads. (Effective July 1, 1991)	5,000
173.31(a)(15)	Tank car with nonreclosing pressure relief device used to transport Class 2 gases, Class 3 or 4 liquids, or Division 6.1 liquids, PG I or II.	7,500
173.31(a)(17)	Tank car with interior heating coils used to transport Division 2.3 or Division 6.1, PG I, based on inhalation toxicity.	7,500
173.31(b)(1), 173.31(b)(3)	Shipper failure to determine (to the extent practicable) that tank, safety appurtenances, and fittings are in proper condition for transportation; failure to properly secure closures. (Sections 173.31(b)(1) & .31(b)(3), often cited as together for loose closure violations, are taken as one violation.) The unit of violation is the car, aggravated if necessary for truly egregious condition. Sections 173.24(b) & (f) establish a ''no-leak'' design standard, and 173.31 imposes that standard on operations.	5,000
	—With actual leak of product	10,000
	—With actual leak allowing the product (or fumes or vapors) to contact any human being. (With safety *vent,* be careful because carrier might be at fault.).	15,000
	—Minor violation, e.g., bottom outlet cap loose on tank car of molten sulfur (because product is a solid when shipped).	1,000
	—Failure (.31(b)(1)) to have bottom outlet cap off during loading	1,000
173.31(b)(4)	Filling and offering for transportation a tank car overdue for retest of tank, interior heater system, and/or safety relief valve. Note that the car may be filled while in-date, held, and then shipped out-of-date. (Adjust penalty if less than one month or more than one year overdue.).	6,000
173.31(c)(1)	Tank, interior heater system, and/or safety valve overdue for retest. If these conditions exist, the violation is of § 173.31(b)(4). If the violation is for improperly conducting the test(s), see the expert attorney.	
173.31(c)(10)	Failure to properly stencil a retest that was performed	1,000
173.32c	Loose closures on an IM portable tank (§ 173.24 establishes the ''tight closure'' standard; § 172.32c applies it to IM portable tanks.) (The scale of penalties is the same as for tank cars.).	5,000
	—With actual leak of product	10,000
	—With actual leak and human being contact	15,000
	—Minor violation	1,000
173.314(b)(5)	No commodity stencil, compressed gas tank car. (See also § 172.330)	2,500
173.314(c)	Compressed gas loaded in excess of filling density (same basic concept as insufficient outage)	6,000
	—''T'' car with excessive voids in the thermal coating, such that the car no longer complies with the DOT specification. Section 173.31(a)(1) requires tank cars used to transport hazardous materials to meet the requirements of the applicable specification and this section (§ 173..314(c)) lists 112T/114T cars as allowed for compressed gases.	5,000
PART 174		
General Requirements:		
174.3	Acceptance of improperly prepared shipment. This general duty section must be accompanied by a citation to the specific section violated.	
174.7	Carrier's failure to instruct employees; cannot be based on inference; §§ 172.700-.704 are preferred citations.	(5)
174.8(b)	—Failure to inspect hazardous materials (and adjacent) cars at point where train is required to be inspected. (Unit of violation is the train.) (Note: For all ''failure to inspect'' citations, the mere presence of a nonconforming condition does not *prove* a failure to inspect.).	4,000

49 CFR section	Description	Guideline
	—Allowing unsafe loaded placarded car to continue in transportation beyond point where inspection was required). (Unit of violation is the car.).	8,000
	—Failure to determine whether placards are in place and conform to shipping papers (at a required inspection point). (Unit of violation is the car.).	5,000
174.9(a)	Failure to properly inspect loaded, placarded tank car at origin or interchange	4,000
174.9(b)	Loose or insecure closures on tank car containing a residue of a hazardous material. (FRA policy is that, against a railroad, this violation must be observable from the ground because, for reasons of safety, railroad inspectors do not climb on cars absent an indication of a leak.).	1,000
174.9(c)	Failure to ''card'' a tank car overdue for tank retest	3,000
174.10(c)	Offering a noncomplying shipment in interchange	3,000
174.10(d)	Offering leaking car of hazardous materials in interchange	10,000
174.12	Improper performance of intermediate shipper/carrier duties; applies to forwarders and highway carriers delivering TOFC/COFC shipments to railroads.	3,000
174.14	Failure to expedite: violation of ''48-hour rule.'' Note: does not apply to cars ''held short'' of destination or constructively placed.	1,000
General Operating Requirements.	Note: This subpart (Subpart B) of Part 174 has three sections referring to shipment documentation: § 174.24 relating to *accepting* documents, § 174.25 relating to the *preparation* of movement documents, and § 174.26 relating to movement documents in the *possession* of the train crew. Only the most relevant section should be cited. In most cases, the unit of violation is the shipment, although where a unified consist is used to give notice to the crew, there is some justification for making it the train, especially where the discrepancy was generated using automated data processing and the error is repetitious.	
174.24	Accepting hazardous materials shipment without properly prepared shipping paper. (Note: The carrier's duty extends only to the document received, that is, a shipment of hazardous materials in an unplacarded transport vehicle with a shipping paper showing other than a hazardous material is not a violation against the carrier unless knowledge of the contents of the vehicle is proved. Likewise, receipt of a tank car placarded for Class 3 with a shipping paper indicating a flammable liquid does not create a carrier violation if the car, in fact, contains a corrosive. On the other hand, receipt of a placarded trailer with a shipping paper listing only FAK (''freight-all-kinds''), imposes a duty on the carrier to inquire further and to reject the shipment if it is improperly billed.)	
	—Improper hazardous materials information that could cause delay or error in emergency response	7,500
	—Total absence of hazardous materials information	5,000
	—Technical errors, not likely to cause problems, especially with emergency response	1,000
	—Minor errors not relating to hazardous materials emergency response, e.g., not listing an exemption number and the exemption is not one affecting emergency response.	500
174.25	Preparing improper movement documents. (Similar to the requirements in § 174.24, here the carrier is held responsible for preparing a movement document that accurately reflects the shipping paper tendered to it. With no hazardous materials information on the shipper's bill of lading, the carrier is not in violation—absent knowledge of hazardous contents—for preparing a nonhazardous movement document. While ''movement documents'' in the rail industry used to be waybills or switch tickets (almost exclusively), carriers are now incorporating the essential information into a consist, expanded from its former role as merely a listing of the cars in the train.)	
	—Information on the movement document is wrong to the extent that it actually caused or materially contributed to a reaction by emergency responders that aggravated the situation or caused or materially contributed to improper handling by the carrier that led to or materially contributed to a product release.	15,000
	—Total lack of hazardous materials information on movement document. (Some shipping names alone contain sufficient information to reduce the guideline to the next lower level, but they may be such dangerous products that aggravation needs to be considered.).	7,500
	—Some information is present, but the missing or improper description could cause mishandling by the carrier or a delay or error in emergency response, including missing RESIDUE description required by § 174.25(c).	5,000
	—Missing/improper *endorsement,* unless on a switch ticket as allowed under § 174.25(b)	3,500
	—Movement document does not indicate, for a flatcar carrying trailers or containers, which trailers or containers contain hazardous materials. (If all trailers or containers on the flatcar contain hazardous materials, there is no violation.).	2,500
	—When the improper description is not likely to cause serious problem (technical defect)	1,000
	—Minor errors not related to hazardous materials emergency response, e.g., not listing an exemption number and the exemption is not one affecting emergency response.	500
	Note: Failure to include emergency response information is covered at § 172.600–604; while the normal unit of violation for movement documents is the whole document, failure to provide emergency response information *is* a separate violation.	
174.26(a)	Failure to execute the required POISON GAS and EXPLOSIVES 1.1/1.2 notices. (The notice is the unit of violation, because one notice can cover several shipments.).	5,000
	Failure to deliver the required POISON GAS and EXPLOSIVES 1.1/1.2 notices to train and engine crew. (Cite this, or the above, as appropriate.).	5,000
	Failure to transfer notice from crew to crew. (Note that this is very likely an individual liability situation; the penalty guideline listed here, however, presumes action against a railroad.).	3,000
	Failure to keep copy of notice on file	1,000
174.26(b)	Train crew does not have a document indicating position in train of each loaded, placarded car. Aggravate by 50% for Poison Gas, 2.3, and Explosives, 1.1 and 1.2. (Train is the unit of violation.).	6,000
	—Technical violation, e.g., car is listed in correct *relative* order, but not in exact numerical order, usually because of addition of car or cars to head *or* tail of train. (Note: Applies only if the *actual* location is off by 10 or fewer cars.).	1,000

49 CFR section	Description	Guideline
174.26(c)	Improper paperwork in possession of train crew. (If the investigation of an accident reveals a violation of this section and § 174.25, cite this section.) (Shipment is unit of violation, although there is justification for making it the train if a unified consist is used to carry this information and the violation is a pattern one throughout all, or almost all, of the hazardous materials shipments. For intermodal traffic, ''shipment'' can mean the container or trailer—e.g., a UPS trailer with several non-disclosed hazardous materials packages would be one unit.)	
	—Information on the document possessed by the train crew is wrong to the extent that it caused or materially contributed to a reaction by emergency responders that aggravated the situation or caused or materially contributed to improper handling by the carrier that led to or materially contributed to a product release.	15,000
	—Total lack of hazardous materials information on movement document. (Some shipping names alone contain sufficient information to reduce the guideline to the next lower level, but they may be such dangerous products that aggravation needs to be considered.).	7,500
	—Some information is present but the error(s) could cause mishandling by the carrier or a delay or error in emergency response. Includes missing RESIDUE description required by § 174.25(c).	5,000
	—Improper information, but the hazardous materials are small shipments (e.g., UPS moves) and PG III (e.g., the ''low hazard'' materials allowed in TOFC/COFC service without an exemption since HM–197).	3,500
	—Technical defect not likely to cause delay or error in emergency response or carrier handling	1,000
	—Minor error not relating to emergency response or carrier handling, e.g., not listing the exemption number on document and the exemption is not one affecting emergency response.	500
174.33	—Failure to maintain ''an adequate supply of placards.'' [The violation is for ''failure to replace''; if missing placards are replaced, the supply is obviously adequate, if not, failure to have a placard is not a separate violation from failure to replace it.]	
	—Failure to replace lost or destroyed placards based on shipping paper information. (This is in addition to the basic placarding mistakes in, for instance, § 172.504.).	1,000
	Note: A railroad's placarding duties are to *not* accept a car without placards [§ 172.508(b)]; to maintain an ''adequate supply'' of placards and to replace them based on shipping paper information [§ 174.33]; and to *not* transport a car without placards [§ 174.59]. At each inspection point, a railroad must determine that all placards are in place. [§ 172.8(b)] The ''next inspection point'' replacement requirement in § 174.59, q.v., refers to placards that disappear *between* inspection points; a car *at* an inspection point must be placarded because it is in transportation, even if held up at that point. [49 U.S.C. 5102(12)]	
174.45	Failure to report hazardous materials accidents or incidents. Cite §§ 171.15 or 171.16 as appropriate.	
174.50	Moving leaking tank car unnecessarily	7,500
	Failure to stencil leaking tank car	3,500
	Loss of product resulted in human being contact *because* of improper carrier handling	15,000
174.55	Failure to block and brace as prescribed. (See also §§ 174.61, .63, .101, .112, .115; where these more specific sections apply, cite them.) Note: The regulatory requirement is that hazardous materials packages be loaded and securely blocked and braced to prevent the packages from changing position, falling to the floor, or sliding into each other. If the load is tight and secure, pieces of lumber or other materials may not be necessary to achieve the ''tight load'' requirement. Be careful on these and consult freely with the expert attorney and specialists in the Hazardous Materials Division.	
	—General failure to block and brace	5,000
	—Inadequate blocking and bracing (an attempt was made but blocking/bracing was insufficient.)	2,500
	—Inadequate blocking and bracing leading to a leak	7,500
	—Inadequate blocking and bracing leading to a leak and human being contact	15,000
174.59	Marking and placarding. Note: As stated elsewhere, a railroad's placarding duties are to *not* accept a car without placards [§ 172.508(b)], to maintain an ''adequate supply'' of placards and to replace them based on shipping paper information [§ 174.33], and to *not* transport a car without placards [§ 174.59]. At each inspection point, a railroad must determine that all placards are in place. [§ 172.8(b)] The ''next inspection point'' replacement requirement in this section refers to placards that disappear *between* inspection points. A car *at* an inspection point must be placarded because it is in transportation [49 U.S.C. 5102(12)], even if held up at that point. Because the statute creates civil penalty liability only if a violation is ''knowing,'' that is, ''a reasonable person knew or should have known that an act performed by him was in violation of the HMR,'' and because railroads are not under a duty to inspect hazardous materials cars merely standing in a yard, violations written for unplacarded cars in yards must include proof that the railroad knew about the unplacarded cars and took no corrective action within a reasonable time. (Note also that the real problem with unplacarded cars in a railyard may be a lack of emergency response information, §§ 172.600–.604, and investigation may reveal that those sections should be cited instead of this one.)	
	—Complete failure to placard	7,500
	—One placard missing (add $1,000 per missing placard up to a total of three; then use the guideline above).	1,000
	For other placarding violations, see §§ 172.500–.560 and determine if one of them more correctly states the violation.	
174.61	Improper transportation of transport vehicle or freight container on flat car. (Note: If improper lading restraint is the violation, see § 174.55; if improper restraint of a bulk packaging inside a closed transport vehicle is the violation, see § 174.63(b).).	3,000
174.63(a) & (c)	—Improper transportation of portable tank or other bulk packaging in TOFC/COFC service	3,000
	—Improper transportation leading to a release of product	7,500

49 CFR section	Description	Guideline
	—Improper transportation leading to a release and human being contact	15,000
174.63(b)	Improper securement of bulk packaging inside enclosed transport vehicle or freight container.	
	—General failure to secure	5,000
	—Inadequate securement (an attempt to secure was made but the means of securement were inadequate).	2,500
	—Inadequate securement leading to a leak	7,500
	—Inadequate securement leading to a leak and human being contact	15,000
174.63(e)	Transportation of cargo tank or multi-unit tank car tank without authorization and in the absence of an emergency.	7,500
174.67(a)(1)	Tank car unloading operations performed by persons not properly instructed (case cannot be based on inference).	2,500
174.67(a)(2)	Unloading without brakes set and/or wheels blocked. (The enforcement standard, as per 1995 Hazardous Materials Technical Resolution Committee, is that sufficient handbrakes must be applied on one or more cars to prevent movement and each car with a handbrake set must be blocked in both directions. The unloading facility must make a determination on how many brakes to set.)	
	—No brakes set, no wheels blocked, or fewer brakes set/wheels blocked than facility's operating plan.	5,000
	—No brakes set, but wheels blocked	3,000
	—Brakes set, but wheels not blocked	4,000
174.67(a)(3)	Unloading without cautions signs properly displayed. (See Part 218, Subpart B)	2,000
174.67(c)(2)	Failure to use non-metallic block to prop manway cover open while unloading through bottom outlet.	
	—Flammable or combustible liquid, or other product with a vapor flash point hazard	3,000
	—Material with no vapor flammability hazard	500
174.67(h)	Insecure unloading connections, such that product is actually leaking	10,000
174.67(i)	Unattended unloading	5,000
174.67(j)	Discontinued unloading without disconnecting all unloading connections, tightening valves, and applying closures to all other openings. (Note: If the car is attended, this subsection does not apply.).	2,000
174.67(k)	Preparation of car after unloading: Removal of unloading connections is required, as is the closing of *all* openings with a ''suitable tool.'' Note: This subsection requires unloading connections to be ''removed'' when unloading is complete, § 174.67(j) requires them to be ''disconnected'' for a temporary cessation of unloading. The penalties recommended here mirror those in § 173.29, dealing with insecure closures generally.	
	—Hazardous material with insignificant vapor pressure and without classification as ''poison'' or ''inhalation hazard''.	2,000
	—With actual leak	5,000
	—With leak allowing the product to contact any human being	15,000
	—Hazardous material with vapor pressure (essentially any gas or compressed gas) and/or with classification as ''poison'' or ''inhalation hazard''.	5,000
	—With actual leak	7,500
	—With leak allowing the product (or fumes or vapors) to contact any human being). Note: Contact with fumes must be substantial.	15,000
174.69	—Complete failure to remove loaded placards and replace with RESIDUE placard on tank cars	6,000
	—Partial failure. (Unit of violation is the placard; the guideline is used for each placard up to 3, then the penalty above is applicable.).	1,000
174.81	—Failure to obey segregation requirements for materials forbidden to be stored or transported together. (''X'' in the table).	6,000
	—Failure to obey segregation requirements for materials that must be separated to prevent commingling in the event of a leak. (''O'' in the table).	4,000
174.83(a)	Improper switching of placarded rail cars	5,000
174.83(b)	Improper switching of loaded rail car containing Division 1.1/1.2, 2.3 PG I Zone A, or Division 6.1 PG I Zone A, or DOT 113 tank car placarded for 2.1.	8,000
174.83(c)–(e)	Improper switching of placarded flatcar	5,000
174.83(f)	Switching Division 1.1/1.2 without a buffer car or placement of Division 1.1/1.2 car under a bridge or alongside a passenger train or platform.	8,000
174.84	Improper handling of Division 1.1/1.2, 2.3 PG I Zone A, 6.1 PG I Zone A in relation to guard or escort cars.	4,000
174.85	Improper Train Placement (The unit of violation under this section is the car. Where more than one placarded car is involved, e.g., if 2 placarded cars are too close to the engine, both are violations. Where both have a similar violation, e.g., a Division 1.1 car next to a loaded tank car of a Class 3 material, each car gets the appropriate penalty as listed below.)	
	RESIDUE car without at least 1 buffer from engine or occupied caboose	3,000
	Placard Group 1—Division 1.1/1.2 (Class A explosive) materials	
	—Fewer than 6 cars (where train length permits) from engine or occupied caboose	8,000
	—As above but with at least 1 buffer	7,000
	—No buffer at all (where train length doesn't permit 5)	8,000
	—Next to open top car with lading beyond car ends or, if shifted, would be beyond car ends	7,000
	—Next to loaded flat car, except closed TOFC/COFC equipment, auto carriers, specially equipped car with tie-down devices, or car with permanent bulkhead.	6,000
	—Next to operating temperature-control equipment or internal combustion engine in operation	7,000
	—Next to placarded car, except one from same placard group or COMBUSTIBLE	7,000
	Placard Group 2—Division 1.3/1.4/1.5 (Class B and C explosives); Class 2 (compressed gas, other than Division 2.3, PG 1 Zone A; Class 3 (flammable liquids); Class 4 (flammable solid); Class 5 (oxidizing materials); Class 6, (poisonous liquids), except 6.1 PG 1 Zone A; Class 8 (corrosive materials).	

49 CFR section	Description	Guideline
	For tank cars:	
	—Fewer than 6 cars (where train length permits) from engine or occupied caboose	6,000
	—As above but with at least 1 buffer	5,000
	No buffer at all (where train length doesn't permit 5)	6,000
	—Next to open top car with lading beyond car ends or, if shifted, would be beyond car ends	5,000
	—Next to loaded flat car, except closed TOFC/COFC equipment, auto carriers, specially equipped car with tie-down devices, or car with permanent bulkhead.	4,000
	—Next to operating temperature-control equipment or internal combustion engine in operation	5,000
	—Next to placarded car, except one from same placard group or COMBUSTIBLE	5,000
	For other rail cars:	
	—Next to placarded car, except one from same placard group or COMBUSTIBLE	5,000
	Placard Group 3—Divisions 2.3 (PG 1 Zone A; poisonous gases) and 6.1 (PG 1 Zone A; poisonous materials)	
	For tank cars:	
	—Fewer than 6 cars (where train length permits) from engine or occupied caboose	8,000
	—As above but with at least 1 buffer	7,000
	No buffer at all (where train length doesn't permit 5)	8,000
	—Next to open top car with lading beyond car ends or, if shifted, would be beyond car ends	7,000
	—Next to loaded flat car, except closed TOFC/COFC equipment, auto carriers, specially equipped car with tie-down devices, or car with permanent bulkhead.	6,000
	—Next to operating temperature-control equipment or internal combustion engine in operation	7,000
	—Next to placarded car, except one from same placard group or COMBUSTIBLE	7,000
	For other rail cars:	
	—Next to placarded car, except one from same placard group or COMBUSTIBLE	5,000
	Placard Group 4—Class 7 (radioactive) materials.	
	For rail cars:	
	—Next to locomotive or occupied caboose	8,000
	—Next to placarded car, except one from same placard group or COMBUSTIBLE	5,000
	—Next to carload of undeveloped film	3,000
174.86	Exceeding maximum allowable operating speed (15 mph) while transporting molten metals or molten glass.	3,000
174.101(o)(4)	Failure to have proper explosives placards on flatcar carrying trailers/containers placarded for Class 1. (Except for a complete failure to placard, the unit of violation is the placard.).	
	—Complete failure to placard	7,500
	—One placard missing (add $1,000 per missing placard up to a total of three, then use the guideline above).	1,000
174.104(f)	Failure to retain car certificates at ''forwarding station''	1,000
	Failure to attach car certificates to car. (Unit of violation is the certificate, 2 are required.)	1,000
174.204	Improper tank car delivery of gases (Class 2 materials)	3,000
174.304	Improper tank car delivery of flammable liquids (Class 3 materials)	3,000
174.600	Improper tank car delivery of materials extremely poisonous by inhalation (Division 2.3 Zone A or 6.1 Zone A materials).	5,000
	PART 178	
178.2(b)	Package not constructed according to specifications—also cite section not complied with.	
	—Bulk packages, including portable tanks	8,000
	—55-gallon drum	2,500
	—Smaller package	1,000
	PART 179	
179.1(e)	Tank car not constructed according to specifications— also cite section not complied with. (Note: Part 179 violations are against the builder or repairer. Sections in this Part are often cited in conjunction with violations of §§ 172.330 and 173.31 (a)&(b) by shippers. In such cases, the Part 179 sections are cited as references, not as separate alleged violations.).	8,000
179.6	Repair procedures not in compliance with Appendix R of the Tank Car Manual	5,000

[1] See § 172.334.
[2] See § 172.516.
[3] Varies.
[4] See specific section.
[5] See penalties: 172.700–.704.

Donald M. Itzkoff,

Deputy Administrator.

[FR Doc. 96–18823 Filed 7–24–96; 8:45 am]

BILLING CODE 4910–06–P

DEPARTMENT OF COMMERCE

National Oceanic and Atmospheric Administration

50 CFR Part 285

[Docket No. 960416112–6164–02; ID# 071996B]

RIN 0648–AI29

Atlantic Tuna Fisheries; Atlantic Bluefin Tuna Angling Category

AGENCY: National Marine Fisheries Service (NMFS), National Oceanic and Atmospheric Administration (NOAA), Commerce.

ACTION: Closure.

SUMMARY: NMFS closes the fishery for school Atlantic bluefin tuna (ABT) conducted by Angling category fishermen in the waters off Delaware and states south. Closure of this fishery is necessary because the annual quota of 65 metric tons (mt) of school ABT allocated for this subcategory in waters off Delaware and states south is projected to be attained by July 25, 1996. The intent of this action is to prevent overharvest of the quota established for this fishery.

EFFECTIVE DATE: The closure is effective from 2330 hours local time July 25 through December 31, 1996.

FOR FURTHER INFORMATION CONTACT: Bill Hogarth, 301–713–2347.

SUPPLEMENTARY INFORMATION: Regulations promulgated under the authority of the Atlantic Tunas Convention Act (16 U.S.C. 971 *et seq.*) regulating the harvest of ABT by persons and vessels subject to U.S. jurisdiction are found at 50 CFR part 285.

Section 285.22(d)(1) of the regulations provides for an annual quota of 65 mt of school ABT to be harvested from waters off Delaware and states south by individuals in the Angling category. The Assistant Administrator for Fisheries, NOAA (AA), is authorized under § 285.20(b)(1) to monitor the catch and landing statistics and, on the basis of those statistics, to project a date when the catch of ABT will equal any quota under § 285.22. The AA is further authorized under § 285.20(b)(1) to prohibit fishing for, or retention of, Atlantic bluefin tuna by those fishing in the category subject to the quota when the catch of tuna equals the quota established under § 285.22. The AA has determined, based on the reported catch and estimated fishing effort, that the annual quota of school ABT for those fishing in waters off Delaware and states south will be attained by July 25, 1996. Fishing for, catching, possessing, or landing any school ABT in the closed area must cease at 2330 hours local time on July 25, 1996. In addition, landing any school ABT in or from the closed area is prohibited.

However, anglers may continue to tag and release fish less than 47 inches (119 cm) curved fork length under the NMFS tag-and-release program (50 CFR 285.27). The Angling category fishery for bluefin tuna in the large school and small medium classes (47 inches to less than 59 inches (119 cm to less than 150 cm), and 59 inches to less than 73 inches (150 cm to less than 185 cm) curved fork length, respectively) is regulated under a separate quota and is not affected by this closure. Anglers, therefore, may continue to fish for these larger size classes. The 73 metric ton quota of school ABT for the waters off New Jersey and states north is not affected by this closure, and remains open.

Classification

This action is required by 50 CFR 285.20(b)(1) and complies with E.O. 12866.

Authority: 16 U.S.C. 971 *et seq.*

Dated: July 19, 1996.

Richard H. Schaefer,

Director, Office of Fisheries Conservation and Management, National Marine Fisheries Service.

[FR Doc. 96–18851 Filed 7–19–96; 4:21 pm]

BILLING CODE 3510–22–F

50 CFR Part 679

[Docket No. 960129018–6018–01; I.D. 071996A]

Groundfish of the Gulf of Alaska; Northern Rockfish in the Central Gulf of Alaska

AGENCY: National Marine Fisheries Service (NMFS), National Oceanic and Atmospheric Administration (NOAA), Commerce.

ACTION: Closure.

SUMMARY: NMFS is prohibiting directed fishing for northern rockfish in the Central Regulatory Area of the Gulf of Alaska (GOA). This action is necessary to prevent exceeding the northern rockfish total allowable catch (TAC) in this area.

EFFECTIVE DATE: 1200 hrs, Alaska local time (A.l.t.), July 20, 1996, until 2400 hrs, A.l.t., December 31, 1996.

FOR FURTHER INFORMATION CONTACT: Mary Furuness, 907–586–7228.

SUPPLEMENTARY INFORMATION: The groundfish fishery in the GOA exclusive economic zone is managed by NMFS according to the Fishery Management Plan for Groundfish of the Gulf of Alaska (FMP) prepared by the North Pacific Fishery Management Council under authority of the Magnuson Fishery Conservation and Management Act. Fishing by U.S. vessels is governed by regulations implementing the FMP at subpart H of 50 CFR part 600 and part 679.

The northern rockfish TAC for the Central Regulatory Area was established by the Final 1996 Harvest Specifications of Groundfish (61 FR 4304, February 5, 1996) as 4,610 metric tons (mt). (See § 679.20(c)(3)(ii).)

The Director, Alaska Region, NMFS (Regional Director), established a directed fishing allowance for northern rockfish of 4,360 mt, with consideration that 250 mt will be taken as incidental catch in directed fishing for other species in this area. (See § 679.20(d)(1).) The Regional Director has determined that this directed fishing allowance has been reached. Consequently, NMFS is prohibiting directed fishing for northern rockfish in the Central Regulatory Area.

The maximum retainable bycatch amounts at § 679.20(e) apply to a fishery that is closed to directed fishing.

Classification

This action is taken under 50 CFR 679.20 and is exempt from review under E.O. 12866.

Authority: 16 U.S.C. 1801 *et seq.*

Dated: July 19, 1996.

Richard W. Surdi,

Acting Director, Office of Fisheries Conservation and Management, National Marine Fisheries Service.

[FR Doc. 96–18850 Filed 7–19–96; 4:17 pm]

BILLING CODE 3510–22–F

Proposed Rules

Federal Register
Vol. 61, No. 144
Thursday, July 25, 1996

This section of the FEDERAL REGISTER contains notices to the public of the proposed issuance of rules and regulations. The purpose of these notices is to give interested persons an opportunity to participate in the rule making prior to the adoption of the final rules.

DEPARTMENT OF AGRICULTURE

Office of the Secretary

7 CFR Part 1

Freedom of Information and Privacy Act Regulations

AGENCY: Office of the Secretary of Agriculture, USDA.

ACTION: Proposed rule.

SUMMARY: The United States Department of Agriculture (USDA or the Department) is proposing to amend its regulations pertaining to the Freedom of Information and Privacy Act as part of the USDA regulatory reinvention initiative to improve its regulations. These proposed changes, if adopted, will correct references to statutes, regulations, USDA agencies, and USDA officials; reflect the change of the name of the Administration Building to the Jamie L. Whitten Federal Building; update the regulations to reflect changes in statutes and USDA policy; remove gender specific references; remove unnecessary regulations; and make minor, nonsubstantive changes for clarity.

DATES: Consideration will be given only to comments received on or before September 23, 1996.

ADDRESSES: Please send an original and three copies of your comments to Scott C. Safian, Staff Attorney, Regulatory Division, Office of the General Counsel, U.S. Department of Agriculture, Room 2422, South Building, 14th Street and Independence Avenue SW., Washington, D.C. 20250–1400. Comments received may be inspected at USDA, Room 2422, South Building, 14th Street and Independence Avenue SW., Washington, DC 20250–1400, between 8 a.m. and 4:30 p.m., Monday through Friday, except holidays. Persons wishing to inspect comments are encouraged to call ahead on (202) 720–5550 to facilitate entry.

FOR FURTHER INFORMATION CONTACT: Regarding the regulations mentioned in this document, contact Scott C. Safian, Staff Attorney, Regulatory Division, Office of the General Counsel, U.S. Department of Agriculture, Room 2422, South Building, 14th Street and Independence Avenue SW., Washington, D.C. 20250–1400, (202) 720–2003.

Regarding general information on USDA's ''reinventing initiative,'' contact: Marvin Shapiro, Chief, Legislative, Regulatory and Automated Systems Division, Office of Budget and Program Analysis, U.S. Department of Agriculture, Room 147–E, Jamie L. Whitten Federal Building, 14th Street and Independence Avenue SW., Washington, D.C 20250–1400, (202) 720–1516.

SUPPLEMENTARY INFORMATION:

Background

On March 4, 1995, President Clinton announced plans for reforming the Federal regulatory system as part of his ''Reinventing Government'' initiative. In his March 4 directive, the President ordered the heads of all Federal departments and agencies to conduct a review of their regulations and to eliminate or revise those that are outdated or otherwise in need of reform. The U.S. Department of Agriculture completed its review and submitted a report on the review to the Office of Management and Budget on June 1, 1995. The review included USDA's Administrative Regulaitons—Official Records (7 CFR, part 1, subpart A) and Administrative Regulaitons—Privacy Act Regulations (7 CFR, part 1, subpart G). The Department found that these regulations contained incorrect references to statutes, regulations, USDA agencies, USDA officials, and the Jamie L. Whitten Federal Building; unnecessary and outdated provisions; gender specific references; and provisions that could be clarified by making minor, nonsubstantive changes. This proposal, which, if adopted, would correct references to statutes, regulations, USDA agencies, USDA officials and the Jamie L. Whitten Federal Building; remove gender specific references; remove unnecessary regulations; update the regulations to reflect statutory and policy changes that have been made since the regulations were last amended; and make minor nonsubstantive changes for clarity, represents USDA's continuing effort to implement the President's plan.

The Proposal

Authority Citations for 7 CFR, Part 1, Subparts A and G

The Department is proposing to amend 7 CFR, part 1, subpart A, by revising the authority citation for subpart A to reflect the recodification of 7 U.S.C. 2244 at 7 U.S.C. 3125a and the new delegations of authority within the Department which were published in the Federal Register on November 8, 1995, at 60 FR 56392. This proposal also would amend the authority citation for subpart G by adding references to 5 U.S.C. 301 and 31 U.S.C. 9701 which should be included in the authority citation for subpart G.

Amendments to Numerous Provisions in 7 CFR, Part 1, Subparts A and G

The Department also is proposing to amend numerous sections in 7 CFR, part 1, subparts A and G by updating references to the Department offices, titles of Department officials, and Department agencies; replacing gender specific references with gender neutral references; replacing inaccurate cross references; replacing references to the ''Administration Building'' with references to the ''Jamie L. Whitten Federal Building'' to reflect the change in the name of the building that was effectuated by the enactment of Pub. L. No. 103–404; eliminating surplusage; and clarifying provisions in 7 CFR, part 1, subparts A and G.

The Department also is proposing to remove the word ''document(s)'' and add the word ''record(s)'' in the place of the word ''document(s)'' in all of the provisions in 7 CFR, part 1, subparts A and G which relate to the Freedom of Information Act and the Privacy Act, both of which concern access to ''records.''

Specific Amendments to 7 CFR, Part 1, Subparts A and G

In addition to the proposed changes related above, the Department is proposing to amend specific provisions within 7 CFR, part 1, subparts A and G as described below.

Freedom of Information Regulations

Section 1.1 states that subpart A of the regulations establishes policy, procedures, requirements, and responsibilities for administration and coordination of the Freedom of Information Act (FOIA), 5 U.S.C. 552,

and provides that the Office of Governmental and Public Affairs (OGPA) has the primary administrative responsibility for the FOIA in the USDA. The OGPA is no longer an agency of the USDA and its duties have been subsumed by the Office of Communications (OC). Furthermore, while the OGPA was headed by an Assistant Secretary and was part of the Office of the Secretary of Agriculture, the Office of Communications is headed by a Director and is not part of the Secretary's office. The Office of Communications consists of nine divisions, each headed by a director, and a Press Secretary staff. Accordingly, the Department is proposing to amend § 1.1 to reflect these changes in Department administration and organization. Similar changes are proposed to be made in other sections of the regulations.

Section 1.2(a) provides that agencies of USDA shall comply with the time limits set forth in the FOIA for responding to processing requests and appeals for agency documents, unless there are exceptional circumstances within the meaning of 5 U.S.C. 552(a)(6)(B). The Department is proposing to remove the reference to ''exceptional circumstances'' and replace it with a reference to ''unusual circumstances'' because the term defined in 5 U.S.C. 552(a)(6)(B) is ''unusual circumstance.''

Section 1.4(b)(6) describes the organization and responsibilities of the Office of Governmental and Public Affairs. As discussed above, this office no longer exists. Accordingly, this proposed rule would amend § 1.4(b)(6) to reflect these changes in Department administration and organization, and describe the organization of the Office of Communications.

Section 1.6(a) provides that a person requesting records from any agency of the Department may request a fee wavier ''if there is likely to be a charge for the requested information.'' Persons requesting records may not know whether the Department is likely to charge for the requested information, and the Department does not believe that any purpose is served by requiring persons requesting records to determine the likelihood of a fee as a condition of asking for a fee waiver. Accordingly, the Department is proposing to eliminate the requirement that a request for a few waiver may only be made if there is likely to be a charge for the requested information.

Section 1.8(b) provides that if records requested contain some portions which are exempt from mandatory disclosure and others which are not exempt from disclosure, the official responding to the request shall ensure that all nonexempt portions are disclosed. In 1974, the FOIA was amended to provide that ''reasonably segregable'' portions of records shall be provided to persons requesting agency records after deletion of the portions which are exempt under 5 U.S.C. 552(b). For this reason, the Department is proposing to amend § 1.8(b) to require that the official responding to the request ensure that reasonably segregable nonexempt portions are disclosed.

Section 1.11(a) provides that whenever a request (including any ''demand'' as defined in § 1.21) is received in USDA for information which has been submitted by a business, all agencies of the Department must provide the business information submitter with certain specified information. Section 1.21 was removed from the regulations by a final rule published in the Federal Register on October 19, 1990, at 55 FR 42347. Former 7 CFR 1.21 was reworded and incorporated in a new provision, 7 CFR 1.215. Therefore, the Department is proposing to eliminate the reference to ''§ 1.21'' and replace it with a reference to 7 CFR 1.215.

Section 1.16 delegates authority within the USDA to promulgate regulations providing a uniform schedule of fees applicable to all agencies of the Department regarding requirements for records under subpart A of the regulations. The regulations providing for a uniform fee schedule are set forth at appendix A of the subpart. Section 1.16 provides that any amendments to the fee schedule shall be made pursuant to notice and opportunity for comment. Under an overly strict reading of this section, even a minor, nonsubstantive change to the fee schedule, such as the correction of a spelling error, may only be made after notice and comment rulemaking. It is not the purpose of § 1.16 to require any more rulemaking procedure than that provided under the Administrative Procedure Act. Accordingly, the Department is proposing to remove the language in § 1.16 which provides that any amendments to the fee schedule will be made pursuant to notice and opportunity for comment. Substantive amendments to the fee schedule, such as changes to the fees to be charged for processing requests under this subpart or changes to the uniform fee schedule that modify procedures for or circumstances under which a fee may be waived or reduced, will continue to be made pursuant to notice and comment rulemaking, as required by law.

Privacy Act Regulations

Section 1.123 of the Department's Privacy Act regulations contains a listing of those systems of records maintained by agencies of USDA which have been exempted, pursuant to 5 U.S.C. 552a(K) from the provisions of 5 U.S.C. 552a, paragraphs (c)(3), (d), (e)(1), (e)(4)(G), (H), and (I), and (f) of the Privacy Act. The reasons for exempting each system of records are set out in the notice for that system published in the Federal Register. The names of several of the agencies and systems listed in § 1.123 are antiquated or have otherwise changed. Accordingly, the Department is proposing to make several changes to § 1.123 to reflect this fact.

Executive Order 12866 and Regulatory Flexibility Act

This proposed rule has been reviewed under Executive Order 12866. The rule has been determined to be not significant for the purposes of Executive Order 12866 and, therefore, has not been reviewed by the Office of Management and Budget.

This proposed rule, if adopted, would correct references to statutes, regulations, USDA agencies, USDA officials, and the Administration Building; remove gender specific references; remove unnecessary provisions; update regulations to reflect changes that have been made in statutes and policy since the regulations were last amended; and make minor, nonsubstantive changes for clarity. This proposed rule will not have any economic impact.

Under these circumstances, the Secretary has determined that this action will not have a significant economic impact on a substantial number of small entities.

Executive Order 12778

This proposed rule has been reviewed under Executive Order 12778, Civil Justice Reform, If this proposed rule is adopted, this rule would: (1) Preempt all state and local laws and regulations that are inconsistent with this rule; (2) have no retroactive effect; and (3) would not require administrative proceedings before parties may file suit in court challenging this rule.

Paperwork Reduction Act

This proposed rule contains no information collection or recordkeeping requirements under the Paperwork Reduction Act of 1995 (44 U.S.C. 3501 *et seq.*).

List of Subjects in 7 CFR Part 1

Administrative practice and procedure, Agriculture, Antitrust,

Claims, Cooperatives, Courts, Equal access to justice, Federal buildings and facilities, Freedom of information, Government employees, Lawyers, Privacy.

Accordingly, 7 CFR part 1, subpart A and subpart G, would be amended as follows:

PART 1—ADMINISTRATIVE REGULATIONS

Subpart A—Official Records

1. The authority citation for part 1, subpart A, would be revised to read as follows:

Authority: 5 U.S.C. 301, 552, 7 U.S.C. 3125a; 31 U.S.C. 9701; and 7 CFR 2.28(b)(7)(viii).

2. Section 1.1 would be revised to read as follows:

§ 1.1 Purpose and scope.

This subpart establishes policy, procedures, requirements, and responsibilities for administration and coordination of the Freedom of Information Act (FOIA), 5 U.S.C. 552, pursuant to which official records may be obtained by any person. This subpart also provides rules pertaining to the disclosure of records pursuant to compulsory process. This subpart also serves as the implementing regulations for the Office of the Secretary (the immediate offices of the Secretary, Deputy Secretary, Under Secretaries, and Assistant Secretaries) and for the Office of Communications. The Office of Communications has the primary responsibility for the FOIA in the Department of Agriculture (USDA). The term ''agency'' or ''agencies'' is used throughout this subpart to include both USDA program agencies and staff offices.

§ 1.2 [Amended]

3. Section 1.2 would be amended as follows:

a. Paragraph (a) would be amended by removing the word ''documents'' and adding the word ''records'' in its place; and by removing the word ''exceptional'' and adding the word ''unusual'' in its place.

b. Paragraph (b) would be amended by removing the word ''documents'' and adding the word ''records'' in its place.

§ 1.3 [Amended]

4. In § 1.3, paragraph (a)(2) would be amended by removing the word ''thereto'' and adding the words ''to indexes'' in its place.

5. Section 1.4 would be amended as follows:

a. Paragraph (a) introductory text would be amended by removing the words ''Office of Governmental and Public Affairs'' and adding the words ''Office of Communications'' in their place.

b. Paragraphs (a)(1) and (a)(2) would be amended by removing the words ''Administration Building'' and adding the words ''Jamie L. Whitten Federal Building'' in their place.

c. Paragraph (a)(3) would be amended by removing the words ''Director of Information, Office of Governmental and Public Affairs'' and adding the words ''FOIA Coordinator, Office of Communications'' in their place.

d. Paragraph (a)(4) would be amended by removing the words ''Assistant Secretary for Governmental and Public Affairs'' and adding the words ''Director of Communications, Office of Communications'' in their place.

e. Paragraph (b) introductory text would be amended by removing the words ''Office of Governmental and Public Affairs (OGPA)'' and adding the words ''Office of Communications (OC)'' in their place.

f. Paragraph (b)(3) would be amended by removing the reference ''7 CFR part 2, subpart A'' and adding the reference ''part 2, subpart A, of this title'' in its place.

g. Paragraph (b)(4) would be amended by removing the words ''Office of Governmental and Public Affairs'' and adding the words ''Office of Communications'' in their place; and by removing the words ''The Office is'' and adding the words ''The Office of Communications is'' in their place.

h. Paragraph (b)(5) would be revised to read as set forth below.

i. Paragraph (b)(6) would be revised to read as set forth below.

§ 1.4 Implementing regulations for the Office of the Secretary.

* * * * *

(b) * * *

5. The Office of Communications is headed by the Director of Communications. In the Director's absence, the Office of Communications is headed by the Press Secretary.

(6) The Office of Communications consists of nine divisions, each headed by a director, and a Press Secretary.

§ 1.5 [Amended]

6. In § 1.5, paragraph (b) would be amended as follows:

a. In the first sentence, by removing the word ''also''; and by adding the words ''for public inspection and copying'' immediately after the words ''make available''.

b. In the second sentence, by removing the word ''thereto'' and adding the words ''to such indexes'' in its place.

c. In the third sentence, by removing the word ''Notice'' and adding the word ''notice'' in its place.

7. Section 1.6 would be amended as follows:

a. In paragraph (a), the second sentence would be amended by removing the words ''if there is likely to be a charge for the requested information''; in the third sentence, by removing the words ''Office of Governmental and Public Affairs'' and adding the words ''Office of Communications'' in their place both time they appear; in the third sentence, by removing the words ''Director of Information'' and adding the words ''Director or Communications'' in their place; and in the fourth sentence, by removing the words ''that Act'' and adding the words ''the Freedom of Information Act'' in their place.

b. Paragraph (b) would be amended by removing the words ''etc., which'' and adding the words ''names of individuals, names of offices, and names or agencies or other organizations that'' in their place.

c. In paragraph (c), the first sentence would be amended by removing the word ''it'' and adding the words ''the agency'' in its place; and by removing the words ''he or she'' and adding the words ''the requester'' in their place.

d. Paragraph (e) would be amended by removing the words ''the person making the request'' and adding the words ''the requester'' in their place; and by adding the words ''of this subpart'' immediately after the words ''appendix A''.

e. Paragraph (f) would be amended by removing the words ''nonagency-specific, i.e., are''; and by removing the words ''Office of Governmental and Public Affairs, Office of Information, Special Programs Division'' and adding the words ''Office of Communications'' in their place.

f. Paragraph (g) would be amended by removing the word ''(agencies)'' and adding the words ''or agencies'' in its place; and by removing the words ''The unit'' and adding the words ''The central processing unit'' in their place.

g. Paragraph (h) would be revised to read as set forth below.

§ 1.6 Requests for records.

* * * * *

(h) Each agency shall develop and maintain a record of all written and oral requests and appeals received in that agency. The record shall include the name of the requester; a brief summary of the information requested; whether the request or appeal was granted, denied, or partially denied; the exemption from mandatory disclosure under 5 U.S.C. 552(b) upon which any

denial was based; and the amount of any fees associated with the request or appeal.

§ 1.8 [Amended]

8. Section 1.8 would be amended as follows:

a. In paragraph (a) introductory text, the third sentence would be amended by removing the words ''it grants'' and adding the words ''the agency grants'' in their place.

b. Paragraph (b) would be amended by removing the word ''insure'' and adding the word ''ensure'' in its place; and by adding the words ''reasonably segregable'' immediately before the word ''nonexempt''.

c. In paragraph (d) introductory text, the third sentence would be amended by removing the words ''it grants'' and adding the words ''the agency grants'' in their place.

d. In paragraph (e), the sentence would be amended by removing the word ''Agencies'' and adding the words ''Each agency'' in its place; by removing the word ''thereof'' and adding the words ''of the fee'' in its place; in the third sentence, by removing the words ''In instances where'' and adding the word ''If'' in their place; and by removing the word ''likewise''.

e. Paragraph (f) would be amended by removing the words ''the forwarding of copies'' and adding the words ''providing copies of the records'' in their place.

f. Paragraph (g) would be amended by adding the words ''of this subpart'' immediately after the words ''appendix A'' both times they appear; and, in the second sentence, by removing the words ''Similarly, as a matter of policy, where'' and adding the word ''If'' in their place.

9. Section 1.9 would be amended as follows:

a. Paragraph (a) would be amended by removing the words ''They include'' and adding the words ''Search services include'' in their place; and by removing the words ''They also include'' and adding their words ''Search services also include'' in their place.

b. Paragraph (c) would be removed.

c. Paragraph (b) would be revised to read as set forth below.

§ 1.9 Search services.

* * * * *

(b) Search services do not include the time spent locating a record if the record is in its normal location in a file or other facility or the review of records to determine whether the records are exempt.

10. Section 1.10 would be amended as follows:

a. Paragraph (a) would be amended by removing the word ''documents'' and adding the word ''records'' in its place; by adding the words ''of this subpart'' immediately after the words ''appendix A''; and by removing the word ''document'' and adding the word ''record'' in its place.

b. Paragraph (b) would be amended by removing the word ''documents'' and adding the word ''records'' in its place both times it appears.

c. Paragraph (c) would be revised to read as set forth below.

§ 1.10 Review services.

* * * * *

(c) Review services do not include the time spent resolving general legal or policy issues regarding the application of exemptions.

§ 1.11 [Amended]

11. In § 1.11, paragraph (a) introductory text would be amended by removing the words ''Whenever a request (including any 'demand' as defined in § 1.21)'' and adding the words ''If a request (including a subpoena duces tecum as described in § 1.215)'' in their place.

§ 1.13 [Amended]

12. Section 1.13 would be amended as follows:

a. In paragraph (b), the last sentence would be amended by removing the words ''Assistant General Counsel.'' and adding the words ''Assistant General Counsel, Research and Operations Division, Office of the General Counsel.'' in their place.

b. Paragraph (c) would be amended by adding the words '', Research and Operations Division, Office of the General Counsel,'' immediately after the words ''Assistant General Counsel''; by removing the words ''Office of Governmental and Public Affairs'' and adding the words ''Office of Communications'' in their place; and by removing the word ''thereof'' and adding the words ''of the administrative deadline'' in its place.

§ 1.14 [Amended]

13. Section 1.14 would be amended to read as follows:

a. Paragraph (a) would be amended by removing the word ''dispatched'' and adding the words ''sent to the requester'' in its place.

b. Paragraph (b)(3) would be amended by removing the word ''therein'' and adding the words ''in the request'' in its place; and by removing the words ''Office of Governmental and Public Affairs'' and adding the words ''Office of Communications'' in their place.

14. Section 1.16 would be revised to read as follows:

§ 1.16 Fee schedule.

Pursuant to § 2.28 of this title, the Chief Financial Officer is delegated authority to promulgate regulations providing for a uniform fee schedule applicable to all agencies of the Department regarding requests for records under this subpart. The regulations providing for a uniform fee schedule are found in appendix A of this subpart.

§ 1.18 [Amended]

15. Section 1.18 would be amended as follows:

a. Paragraph (a)(7) would be amended by removing the word ''fully''.

b. Paragraph (b) would be amended by removing the words ''Director of Information, Office of Governmental and Public Affairs'' and adding the words ''Director of Communications, Office of Communications'' in their place.

c. Paragraph (c) would be amended by removing the words ''Director of Information'' and adding the words ''Director of Communications, Office of Communications'' in their place; and by removing the reference ''5 U.S.C. 552(d)'' and adding the reference ''5 U.S.C. 552(e)'' in its place.

Appendix A of Subpart A [Amended]

16. Appendix A of subpart A would be amended as follows:

a. Section 1 would be amended by removing the word ''documents'' and adding the word ''records'' in its place.

b. In § 2, the first sentence would be amended by adding the words ''of this appendix'' immediately after the words ''section 5'' and by removing the word ''document'' and adding the word ''record'' in its place; in the second sentence, by removing the words ''in certifying'' and adding the word ''certifying'' in their place and by removing the words ''in sending'' and adding the word ''sending'' in their place; and in the third sentence, by removing the word ''schedule'' and adding the word ''appendix'' in its place.

c. In § 3, paragraph (a) would be amended by removing the word ''documents'' and adding the word ''records'' in its place; by removing the words ''as specified below in section 5'' and adding the words ''as specified in section 5 of this appendix'' in their place; by removing the word ''information'' and adding the word ''records'' in its place; and by adding the words ''of this appendix'' immediately after the reference to ''section 4(e)''.

d. In § 3, paragraph (b) would be amended by removing the words ''Also, no'' and adding the word ''No'' in their place.

e. In § 3, paragraph (c) would be amended by removing the words ''In addition, fees'' and adding the word ''Fees'' in their place.

f. In § 3, paragraph (d) introductory text would be amended by removing the word ''Documents'' and adding the word ''Records'' in its place; and in paragraph d(2) by removing the word ''free'' and adding the word ''fee'' in its place.

g. In § 4, paragraph (c) would be amended by removing the word ''information'' and adding the word ''records'' in its place; and by removing the word ''document(s)'' and adding the word ''records'' in its place.

h. In § 4, paragraph (j) would be amended by removing the words ''as amended (5 U.S.C. 552),''; by adding the words ''of this appendix'' immediately after the reference to ''section 6''; and by removing the word ''schedule'' and adding the word ''appendix'' in its place.

i. In § 4, paragraph (k) would be amended by removing the word ''schedule'' and adding the word ''appendix'' in its place; and by removing the words ''(formerly 31 U.S.C. 483a)''.

j. Section 5 introductory text would be amended by removing the words ''as amended,''; and by removing the words ''The Act'' and adding the word ''FOIA'' in their place.

k. In § 5, paragraph (a) introductory text would be amended by adding the words ''of this appendix'' immediately after the reference to ''section 3(a)''; and in paragraph (a)(2) by removing the word ''documents'' and adding the word ''records'' in its place.

l. In § 5, paragraph (b)(2) would be amended by adding the words ''of this appendix'' immediately after the reference ''(see section 5(a)(1))''.

m. In § 5, paragraph (d) would be amended by removing the words ''any of the above categories'' and adding the words ''the categories described in paragraphs (a), (b), or (c) of this section'' in their place; by removing the word ''documents'' and adding the word ''records'' in its place; and by adding the words ''of this appendix'' immediately after the reference to ''section 4(e)''.

n. In § 6, paragraph (a) introductory text would be amended by revising the first sentence to read, ''Agencies shall waive or reduce fees on request for records if disclosure of information in the records is deemed to be in the public interest.''.

o. In § 6, paragraph (a)(1)(v) would be amended by removing the words '', if so,''.

p. In § 6, paragraph (a)(3)(i) would be amended by removing the word ''information'' and adding the word ''records'' in its place.

q. In § 6, paragraph (a)(3)(ii) would be amended by removing the word ''recipient'' and adding the word ''requester'' in its place.

r. In § 8, paragraph (d) would be amended by removing the word ''below'' and adding the words ''in section 9 of this appendix'' in its place.

s. Section 9 would be amended by removing the reference ''section 3717 of title 31 U.S.C.'' and adding the reference ''31 U.S.C. 3717'' in its place.

t. Section 10 would be amended by removing the reference ''the provisions of 31 U.S.C. 3701, 3711–3719'' and adding the reference ''31 U.S.C. 3701, 3711–3720A'' in its place.

u. In § 13, the heading would be amended by removing the word ''photographic''.

v. Section 13 introductory text would be amended by removing the words ''this action to be'' and adding the words ''that furnishing free reproductions is'' in their place.

w. In § 13, paragraph (a) would be amended by removing the words ''Press, radio, television, and newsreel representatives'' and adding the words ''Representatives of the news media'' in their place.

x. Section 17 introductory text would be amended by removing the word ''here'' and adding the words ''in this section'' in its place.

y. In § 17, the fourth sentence of paragraph (a) would be amended by removing the words ''fee schedule'' and adding the word ''appendix'' in their place; and by removing the words ''National Agricultural Library, Room 111, Information Access Division, USDA, Beltsville, Maryland 20705 (301–344–3834)'' and adding the words ''National Agricultural Library, Agricultural Research Service, USDA, Document Delivery Services Branch, 10301 Baltimore Boulevard, Beltsville, Maryland 20705–2351 (301–504–6503)'' in their place.

z. In § 17, paragraph (c) would be amended by removing the word ''below'' and adding the words ''in this paragraph'' in its place.

aa. In § 17, paragraph (d) would be amended by removing the word ''below'' and adding the words ''in this paragraph'' in its place.

bb. Section 11 including the heading would be revised to read as set forth below.

cc. Section 12 would be revised to read as set forth below.

dd. In § 17, paragraph (e) would be revised to read as set forth below.

Appendix A—Fee Schedule

* * * * *

Section 11. Photographic and digital reproductions of microfilm, aerial imagery, and maps.

Microfilm, aerial imagery, and maps that have been obtained in connection with the authorized work of this Department may be sold at the estimated cost of furnishing reproductions of these records, using photographic, digital, or other methods of reproduction as prescribed in this appendix.

Section 12. Agencies which furnish photographic reproductions.

(a) *Aerial photographic reproductions.* The agencies of the Department identified in this paragraph furnish aerial photographic reproductions.

(1) Farm Service Agency (FSA), APFO, USDA–FSA, 2222 West 2300 South, P.O. Box 30010, Salt Lake City, Utah 84125.

(2) Natural Resources Conservation Service (NRCS), National Cartography and Geospatial Center, 501 Felix Street, Building 23, Fort Worth, Texas 76115, or a cartographic facility in any NRCS Technical Service Center.

(b) *Other photographic reproductions.* Photographic reproductions other than aerial photographic reproductions may be obtained from the agencies of the Department identified in this paragraph.

(1) Farm Service Agency (FSA), Aerial Photography Field Office, USDA–FSA, 2222 West 2300 South, PO. Box 30010, Salt Lake City, Utah 84125.

(2) Forest Service (FS), USDA, PO. Box 96090, Washington, DC. 20090–6090, or a FS Regional Office.

(3) National Agricultural Library, Agricultural Research Service, USDA, Document Delivery Services Branch, 10301 Baltimore Boulevard, Beltsville, Maryland 20705–2351.

(4) Natural Resources Conservation Service, National Cartography and Geospatial Center, 501 Felix Street, Building 23, Fort Worth, Texas 76115.

(5) Office of Communications, Photography Division, Room 4407 South Building, Washington, DC. 20250.

* * * * *

Section 17. Reproduction prices.

* * * * *

(e) *Special needs.* For special needs not covered elsewhere in this section, persons desiring aerial photographic reproductions should contact the aerial photography coordinator, Farm Service Agency (FSA), Aerial Photography Field Office, USDA–FSA, 2222 West 2300 South, PO. Box 30010, Salt Lake City, Utah 84125.

* * * * *

Subpart G—Privacy Act Regulations

17. The authority citation for part 1, subpart G, would be revised to read as follows:

Authority: 5 U.S.C. 301 and 552a; 31 U.S.C. 9701.

§ 1.110 [Amended]

18. Section 1.110 would be amended by removing the word ''It'' and adding the words ''This subpart'' in its place; and by removing the words ''the Act'' and adding the words ''the Privacy Act'' in their place both times they appear.

§ 1.112 [Amended]

19. In § 1.112, paragraph (a) introductory text would be amended by adding the words ''or her'' immediately after the word ''him''.

§ 1.113 [Amended]

20. Section 1.113 would be amended as follows:

a. Paragraph (a) would be amended by adding the words ''or her'' immediately after the word ''him''; and by adding the words ''or herself'' immediately after the word ''himself''.

b. In paragraph (b), the first sentence would be amended by removing the words ''he is'' and adding the words ''the requester is'' in their place; in the second sentence, by removing the words ''he shall'' and adding the words ''the requester shall'' in their place; by removing the word ''his'' and adding the words ''the requester's'' in its place; by removing the words ''he understands'' and adding the words ''the requester understands'' in their place; and, in the last sentence by removing the words ''when the records are ones whose disclosure is required by 5 U.S.C. 552'' and adding the words ''if the records are required by 5 U.S.C. 552 to be released'' in their place.

c. Paragraph (c) would be amended by removing the words ''him via'' and adding the words ''himself or herself by'' in their place; by removing the words ''him during'' and adding the words ''the requester during'' in their place; and by removing the words ''their presence'' and adding the words ''the presence of such other person or persons'' in their place.

d. Paragraph (d) would be amended by removing the words ''to him'' and adding the words ''to the requester'' in their place; by removing the words ''him copies'' and adding the words ''the requester copies'' in their place; and by removing the word ''thereof'' and adding the words ''of those records'' in its place.

e. In paragraph (e), the first sentence would be amended by removing the words ''he shall'' and adding the words ''the requester shall'' in their place; by removing the words ''his request'' and adding the words ''his or her request'' in their place; by removing the words ''his identity'' and adding the words ''the requester's identity'' in their place; in the second sentence, by removing the words ''he is'' and adding the words ''the requester is'' in their place; by removing the words ''he understands'' and adding the words ''the requester understands'' in their place; and in the third sentence, by removing the words ''when the records are ones whose disclosure is required by 5 U.S.C. 552'' and adding the words ''if the records are required by 5 U.S.C. 552 to be released'' in their place.

§ 1.114 [Amended]

21. Section 1.114 would be amended as follows:

a. Paragraph (d) would be amended by removing the word ''he'' and adding the words ''the system manager'' in its place both times it appears.

b. Paragraph (e) would be amended by removing the word ''he'' and adding the words ''the head of the agency'' in its place; by removing the word ''therefor'' and adding the words ''for the determination'' in its place; and by removing the word ''his'' and adding the words ''the requester's in its place.

§ 1.116 [Amended]

22. Section 1.116 would be amended as follows:

a. Paragraph (a) introductory text would be amended by adding the words ''or her'' immediately after the word ''him''.

b. Paragraph (b) would be amended by removing the reference ''5 U.S.C. 552(e) (1) and (5)'' and adding the reference ''5 U.S.C. 552a(e) (1) and (5)'' in its place.

§ 1.117 [Amended]

23. Section 1.117 would be amended as follows:

a. Paragraph (a) introductory text would be amended by removing the word ''It'' and adding the words ''The agency'' in its place.

b. In paragraph (a)(2), the first sentence would be amended by removing the word ''his'' and adding the word ''the'' in its place; and by removing the word ''he'' and adding the words ''the requester'' in its place.

c. Paragraph (b) would be amended by removing the word ''therefor'' and adding the words ''for the inability to comply with paragraphs (a)(1) or (a)(2) of this section within 30 days,'' in its place.

d. Paragraph (d)(3) would be amended by removing the words ''and where'' and adding the word ''if'' in their place.

e. Paragraph (e)(2) would be amended by removing the word ''therefor'' and adding the words ''for the determination not to grant all or a portion of the request for correction or amendment'' in its place.

f. Paragraph (e)(3) would be amended by adding the words ''or she'' immediately after the word ''he''.

§ 1.118 [Amended]

24. Section 1.118 would be amended as follows:

a. Paragraph (c) would be amended by removing the word ''his'' and adding the word ''a'' in its place.

b. Paragraph (d) would be amended by removing the word ''he'' and adding the words ''the head of the agency'' in its place.

c. Paragraph (e) introductory text would be amended by removing the word ''he'' and adding the words ''the head of the agency'' in its place.

d. Paragraph (e)(1) would be amended by removing the word ''therefor'' and adding the words ''for the determination'' in its place.

e. Paragraph (e)(2) would be amended by removing the word ''his'' and adding the words ''the requester's'' in its place.

§ 1.121 [Amended]

25. Section 1.121 would be amended by removing the words ''enumerated acts'' and adding the words ''acts enumerated in 5 U.S.C. 552a(i)'' in their place; by removing the words ''on or after September 27, 1995,''; and by removing the reference ''5 U.S.C. 552a(m)'' and adding the reference ''5 U.S.C. 552a(m)(1)'' in its place.

§ 1.122 [Amended]

26. Section 1.122 would be amended by removing the word ''thereof'' and adding the words ''of systems of records'' in its place; by removing the word ''below'' and adding the words ''in this section'' in its place.

§ 1.123 [Amended]

27. Section 1.123 would be amended as follows:

a. The introductory text would be amended by removing the word ''thereof'' and adding the words ''of systems of records'' in its place; by removing the word ''below'' and adding the words ''in this section'' in its place.

b. By removing the heading ''AGRICULTURAL STABILIZATION AND CONSERVATION SERVICE'' and adding the heading ''FARM SERVICE AGENCY'' in its place.

c. By removing the heading ''FARMERS HOME ADMINISTRATION'' and removing the words ''Credit Report File, USDA/FmHa–3''.

d. By removing the heading ''FEDERAL GRAIN INSPECTION SERVICE'' and adding the heading

''GRAIN INSPECTION, PACKERS AND STOCKYARDS ADMINISTRATION'' in its place.

e. By removing the heading ''FOOD AND NUTRITION SERVICE'' and adding the heading ''FOOD AND CONSUMER SERVICES'' in its place.

f. By removing, under the subheading *Community Development Division*, the words ''Farmers Home Administration (FmHA) General Case Files, USDA/OGC–12.'' and adding the words ''Farm Service Agency (FSA) General Case Files, USDA/OGC–12a. Rural Housing Service (RHS) General Case Files, USDA/OGC–12b. Rural Business-Cooperative Development Service (RBS) General Case Files, USDA/OGC–12c. Federal Crop Insurance Corporation (FCIC) Cases, USDA/OGC–16.'' in their place.

g. By removing the subheading *Foreign Agriculture and Commodity Stabilization Division* and adding the subheading *International Affairs and Commodity Programs Division* in its place.

h. By removing under the newly designated subheading *International Affairs and Commodity Programs Division* the words ''Federal Crop Insurance Corporation (FCIC) Cases, USDA/OGC–16.''

i. By removing the subheading ''*Packers and Stockyards Division* and adding the subheading *Trade Practices Division* in its place.

Appendix A of Subpart G—INTERNAL DIRECTIVES [Amended]

28. Appendix A of subpart G would be amended as follows:

a. In § 1, paragraph (c) introductory text would be amended by adding the words '', of'' immediately before the colon.

b. In § 1, paragraph (c)(4) would be amended by removing the word ''him'' and adding the words ''the individual'' in its place.

c. In § 1, paragraph (d)(7) would be amended by adding the words ''or her'' immediately after the word ''his''; and by removing the word ''him'' and adding the words ''the individual'' in its place.

d. In § 1, paragraph (d)(8) would be amended by adding the words ''or her'' immediately after the word ''his''; by removing the word ''he'' and adding the words ''the individual'' in its place both times in appears; and by adding the words ''or her'' immediately after the word ''him''.

e. In § 2, paragraph (a) would be amended by removing the words ''insure that 30'' and adding the words ''ensure that at least 30'' in their place.

f. In § 3, paragraph (c) would be amended by removing the word ''above'' and adding the words ''required under paragraph (a) of this section'' in its place; and by adding the words ''or her'' immediately after the word ''his''.

g. In § 4, by removing the words '', if such contract is agreed to on or after September 27, 1975,''; and by removing the words ''that section'' and adding the reference ''5 U.S.C. 552a(i)'' in their place.

h. In § 6, paragraph (a) would be amended by adding the words ''on her'' immediately after the word ''his''.

i. In § 6, paragraph (b) introductory text would be amended by removing the words ''The provisions of paragraph (a) of this Section'' and by adding the words ''Paragraph (a) of this section'' in their place.

j. In § 6, paragraph (c) would be amended by adding the words ''or her'' immediately after the words ''his''.

k. Section 7 introductory paragraph would be amended by removing the words ''(beginning March 30, 1976)''.

l. Section 8 would be amended by removing the words ''the provisions of''.

Done in Washington, DC., this 16th day of July 1996.

Dan Glickman,

Secretary of Agriculture.

[FR Doc. 96–18860 Filed 7–24–96; 8:45 am]

BILLING CODE 3410–01–M

DEPARTMENT OF ENERGY

Federal Energy Regulatory Commission

18 CFR Part 35

[Docket No. RM96–11–000]

Capacity Reservation Open Access Transmission Tariffs

July 18, 1996.

AGENCY: Federal Agency Regulatory Commission.

ACTION: Notice of proposed rulemaking; extension of time and convening a public conference.

SUMMARY: Various participants have requested additional time to comment on the Commission's notice of proposed rulemaking in this proceeding. The proposed rule specifies filing requirements to be followed by public utilities in making transmission tariff filings based on capacity reservations for all transmission users. An extension of time is being granted and a one-day technical conference will be convened.

DATES: An extension of time for filing comments on the proposed rule is granted to and including October 21, 1996. A technical conference will be held on September 20, 1996.

ADDRESSES: Federal Energy Regulatory Commission, 888 First St., NE., Washington, DC 20426.

FOR FURTHER INFORMATION CONTACT: David D. Withnell, Federal Energy Regulatory Commission, Office of the General Counsel, 888 First St., NE., Washington, DC 20426, telephone: (202) 208–2063.

SUPPLEMENTARY INFORMATION: On June 27, 1996, July 3, 1996, and July 17, 1996, Various Utilities,[1] Joint Petitioners,[2] and Allegheny Power Service Corporation (Allegheny Power),[3] respectively, filed motions for an extension of time within which to file comments in response to the Notice of Proposed Rulemaking issued April 24, 1996 in the above-captioned proceeding.[4] Various Utilities, Joint Petitioners, and Allegheny Power express concern that the August 1, 1996 date set by the Commission for filing written comments should hamper the ability of electric industry participants, who must also meet the various requirements of Order Nos. 888 and 889,[5] to address the issues in a meaningful manner.[6] Various Utilities and Allegheny Power request a 61-day extension of time, until October 1, 1996. Joint Petitioners request a greater number of technical conferences or an

[1] Central Illinois Public Service Company, Cleveland Electric Illuminating Company, Commonwealth Edison Company, Central Power and Light Company, Ohio Edison Company, Pennsylvania Power Company, Public Service Company of Oklahoma, South Carolina Electric & Gas Company, Toledo Edison Company, Southwestern Electric Power Company, West Texas Utilities Company, and Union Electric Company.

[2] Edison Electric Institute, National Association of Regulatory Utility Commissioners, American Public Power Association, National Rural Electric Cooperative Association, and North American Electric Reliability Council.

[3] Submitted on behalf of Monongahela Power Company, The Potomac Edison Company, and West Penn Power Company.

[4] Capacity Reservation Open Access Transmission Tariffs, Notice of Proposed Rulemaking, 61 FR 21847 (May 10, 1996) (CRT NOPR).

[5] Promoting Wholesale Competition Through Open Access Non-discriminatory Transmission Services by Public Utilities and Recovery of Stranded Costs by Public Utilities and Transmitting Utilities, 61 FR 21540 (May 10, 1996), FERC Stats. & Regs. ¶ 31,036 (1996) (Order No. 888); Open Access Same-Time Information System (formerly Real-Time Information Networks) and Standards of Conduct, 61 FR 21737 (May 10, 1996), FERC Stats. & Regs. ¶ 31,037 (1996) (Order No. 889); Order Clarifying Order Nos. 888 and 889 Compliance Matters, 76 FERC ¶ 61,009 (July 2, 1996).

[6] Answers in support have been filed by Virginia Electric and Power Company, M–S–R Public Power Agency, Transmission Agency of Northern California, Colorado Association of Municipal Utilities, South Carolina Public Service Authority, and Transmission Access Policy Study Group.

expanded schedule for the Commission's proposed technical conference, and request that the Commission issue, following such conferences, a Supplemental NOPR or Notice of Clarification upon which the parties would then be allowed to submit comments.

Upon consideration, notice is hereby given that the August 1, 1996 deadline for filing written comments is extended to October 21, 1996 and that the Commission will convene a technical conference on September 20, 1996. Because participants will now have the opportunity to submit comments following the technical conference, the Commission has decided to hold a one-day technical conference rather than the two-day conference mentioned in the CRT NOPR. The agenda and the times for the technical conference will be announced at a later date. In addition, the Commission may schedule further procedures and offer further guidance based on the outcome of the technical conference.

Lois D. Cashell,

Secretary.

[FR Doc. 96–18905 Filed 7–24–96; 8:45 am]

BILLING CODE 6717–01–M

ENVIRONMENTAL PROTECTION AGENCY

40 CFR Part 52

[AS–AZ–CA–HW–NV–000–0001; FRL–5541–8]

Correction of Implementation Plans; American Samoa, Arizona, California, Hawaii, and Nevada State Implementation Plans

AGENCY: Environmental Protection Agency (EPA).

ACTION: Notice of proposed rulemaking.

SUMMARY: EPA is proposing to promulgate corrections to the American Samoa State Implementation Plan (SIP), the Arizona SIP, the California SIP, the Hawaii SIP, and the Nevada SIP. These corrections concern the deletion from the SIPs of the rules summarized in Table 1. These rules include a variety of administrative provisions concerning variances, hearing board procedures, and fees. EPA has determined that the rules to be deleted from the above-referenced SIPs were erroneously incorporated into the SIPs by the EPA, and in addition, the variance provisions currently in the SIPs were rendered without legal effect by amendments to the Clean Air Act enacted by Congress in 1977. In addition, the continued presence of these provisions in the SIPs is potentially confusing, and thus, harmful to the regulated community, the states, and EPA. The intended effect of proposing these corrections to the SIPs is to delete the above referenced rules and make the SIPs consistent with the requirements of the Clean Air Act, as amended in 1990 (CAA or ''the Act''), regarding EPA action on SIP submittals and SIPs for national primary and secondary ambient air quality standards.

DATES: Comments must be received on or before August 26, 1996.

ADDRESSES: Comments may be mailed to: Daniel A. Meer, Rulemaking Section (A–5–3), Air and Toxics Division, U.S. Environmental Protection Agency, Region IX, 75 Hawthorne Street, San Francisco, CA 94105–3901.

Copies of the rules being proposed for deletion are available for public inspection at EPA's Region IX office during normal business hours. Copies of the rules are also available for inspection at the locations listed in **SUPPLEMENTARY INFORMATION** under ''Public inspection''.

FOR FURTHER INFORMATION CONTACT: Julie A. Rose, Rulemaking Section (A–5–3), Air and Toxics Division, U.S. Environmental Protection Agency, Region IX, 75 Hawthorne Street, San Francisco, CA 94105 Telephone: (415) 744–1184.

SUPPLEMENTARY INFORMATION:

Public Inspection

Arizona Department of Environmental Quality, P.O. Box 600, Phoenix, CA 85001–0600.

Coconino County Air Pollution Control District, 1515 East Cedar Avenue, Flagstaff, AZ 86004.

Maricopa County, Environmental Services Department, 2406 S. 24th Street, Suite E–214, Phoenix, AZ 85034.

Pima County Department of Environmental Quality, 130 West Congress Street, 3rd Floor, Tucson, AZ 85701–1317.

Pinal County Air Quality Control District, P.O. Box 987, Florence, AZ 85232.

California Air Resources Board, Stationary Source Division, Rule, Evaluation Section, 2020 ''L'' Street, Sacramento, CA 95814.

Amador County Air Pollution Control District, 500 Argonaut Lane, Jackson, CA 95642.

Bay Area Air Quality Management District, 939 Ellis Street, San Francisco, CA 94109.

Butte County Air Quality Management District, 2525 Dominic Drive, Chico, CA 95928.

Calaveras County Air Pollution Control District, 891 Mountain Ranch Road, San Andreas, CA 95249–9709.

Colusa County Air Pollution Control District, 100 Sunrise Blvd. Suite F, Colusa, CA 95932.

Glenn County Air Pollution Control District, P.O. Box 351, Willows, CA 95988.

Great Basin Unified Air Pollution Control District, 157 Short Street, Suite 6, Bishop, CA 93514.

Imperial County Air Pollution Control District, 150 South Ninth Street, El Centro, CA 92243–2801.

Kern County (Southeast Desert) Air Pollution Control District, 2700 M. Street, Suite 290, Bakersfield, CA 93301,

Lake County Air Quality Management District, 883 Lakeport Blvd., Lakeport, CA 95453.

Lassen County Air Pollution Control District, 175 Russell Avenue, Susanville, CA 96130.

Mariposa County Air Pollution Control District, P.O. Box 2039, Mariposa, CA 95338.

Mendocino County Air Quality Management District, 306 E. Gobbi Street, Ukiah, CA 95482.

Modoc County Air Pollution Control District, 202 W. Fourth Street, Alturas, CA 96101.

Mojave Desert Air Quality Management District, 15428 Civic Drive, Suite 200, Victorville, CA 92392.

Monterey Bay Unified Air Pollution Control District, 24580 Silver Cloud Ct., Monterey, CA 93940.

Northern Sierra Air Quality Management District, P.O. Box 2509, Grass Valley, CA 95945.

North Coast Unified Air Quality Management District, 2389 Myrtle Avenue, Eureka, CA 95501.

Northern Sonoma County Air Pollution Control District, 109 North Street, Healdsburg, CA 95448.

Placer County Air Pollution Control District, 11464 B Avenue, Auburn, CA 95603.

Sacramento Metropolitan Air Quality Management District, 8411 Jackson Road, Sacramento, CA 95826.

San Diego County Air Pollution Control District, 9150 Chesapeake Drive, San Diego, CA 92123–1096.

San Joaquin Valley Unified Air Pollution Control District, (Formerly: Fresno County APCD, Kern County APCD, Kings County, APCD, Madera County APCD, Merced County APCD, San Joaquin County, APCD, Stanislaus County APCD, and Tulare County APCD), 1999 Tuolumne Street, Suite 200, Fresno, CA 93721.

San Luis Obispo Air Pollution Control District, 2156 Sierra Way, Suite B, San Luis Obispo, CA 93401.

Santa Barbara County Air Pollution Control District, 26 Castilian Drive, B–23, Goleta, CA 93117.
Shasta County Air Quality Management District, 1640 West Street, Redding, CA 96001.
South Coast Air Quality Management District, 21865 E. Copley Drive, Diamond Bar, CA 91765.
Sutter County Air Pollution Control District, (Now Feather River Air Quality Management District), 938 14th Street, Marysville, CA 95901.
Tehama County Air Pollution Control District, 1750 Walnut Street, Red Bluff, CA 96080.
Tuolumne County Air Pollution Control District, 2 South Green Street, Sonora, CA 95370.
Ventura County Air Pollution Control District, 669 County Square Drive, Ventura, CA 93003.
Yolo-Solano Air Quality Management District, 1947 Galileo Court, Suite 103, Davis, CA 95616.
Hawaii Department of Health, Environmental Management Division, P.O. Box 3378, Honolulu, HI 96801.
American Samoa Environmental Quality Commission, Governor's Office, Pago Pago, American Samoa 96799.
Nevada Division of Environmental Protection, 333 West Nye Lane, Carson City, NV 89710.
Clark County Air Pollution Control Division, P.O. Box 4426, Las Vegas, NV 89127.

Applicability

This document addresses EPA's proposed action for the rules summarized in the table following this document.

Background

The Clean Air Act was first enacted in 1970. At this time, a large number of state and district rules and regulations were submitted to the EPA for incorporation into the SIPs in order to fulfill the new federal requirements. In many cases states and districts submitted their entire regulatory air pollution programs, including many elements not required by the Act. Due to resource and budget constraints, EPA's review of these submittals focused primarily on the substantive technical, legal, and enforcement elements of the submittals. At the time, EPA did not perform a detailed review of the numerous administrative provisions, which in many cases included procedures for granting variances, hearings, fee provisions.

Variance Provisions

A new section 110(i) was added to the Act when it was amended in 1977. Section 110(i) prohibits the modification of any requirement of an applicable SIP by any means other than a SIP revision. Section 110(i) contains the following exceptions from this requirement: primary nonferrous smelter orders under section 119, emergency suspensions issued by the President under 110(f) or the Governor under 110(g), exemptions issued by the President for federal facilities under section 118, and compliance orders under section 113(d).

Variance provisions that were mistakenly incorporated into the applicable SIPs provide for modification of the requirements of these applicable SIPs. Because these variance provisions do not fall under any of the exceptions set forth in section 110(i), they are prohibited by, and are not legally enforceable pursuant to, section 110(i) of the Act.

Because variance provisions are prohibited by section 110(i) of the Act, their incorporation into the SIP is not only inconsistent with the Act but confusing to the regulated industry. A state or district issued variance has no effect on the federal enforceability of a provision unless the variance is submitted to EPA and approved into the SIP as a source-specific SIP revision. However, the variance provisions do not state this fact and their inclusion in the SIP is misleading.

In addition to being prohibited by section 110(i) of the Act and misleading to the regulated community, the variance provisions have no relationship to the requirements of section 110 and Part D of the Act. For these reasons, EPA is proposing to delete the variance provisions listed in Table 1 from the SIPs for American Samoa, Arizona, California, Hawaii, and Nevada.

Hearing Board Procedures and Miscellaneous Administrative Provisions

In addition to the specific variance provisions discussed above, many of the American Samoa, Arizona, California, Hawaii, and Nevada SIPs contain extensive provisions governing hearing board procedures and other administrative requirements. These provisions concern issues not required by the Act, such as the frequency of meetings, the fees, and salaries paid to board members; the type of forms that must be filed to petition for a hearing; and requirements for issuing abatement orders. These provisions were mistakenly incorporated into the applicable SIPs and are not requirements under section 110 and Part D of the Act. For this reason, EPA is proposing to delete the hearing board procedures and other administrative provisions listed in Table 1 from the applicable SIPs for American Samoa, Arizona, California, Hawaii, and Nevada.

Fee Provisions

Like the hearing board procedures discussed above, fee provisions which were mistakenly incorporated into the applicable SIPs are not requirements under section 110 and Part D of the Act, and the purposes of these rules have no relationship to these CAA requirements. Only fee provisions that are considered to be economic incentive rules under sections 110(a)(2)(A), 172(c)(6), or 182(g)(4) would appropriately be incorporated into the SIP. For this reason, EPA is proposing to remove the fee provisions listed in Table 1 from the applicable SIPs for American Samoa, Arizona, California, Hawaii, and Nevada.

Section 110(k)(6)

Section 110(k)(6) of the Act provides:

> Whenever the Administrator determines that the Administrator's action approving, disapproving, or promulgating any plan revision (or part thereof), area designation, redesignation, classification, or reclassification was in error, the Administrator may in the same manner as the approval, disapproval, or promulgation revise such action as appropriate without requiring any further submission from the State. Such determination and the basis thereof shall be provided to the State and public.

EPA interprets this provision to authorize the Agency to revise an action when EPA finds that (1) EPA clearly erred in failing to consider, or inappropriately considered, information made available to EPA at the time of the action or the information made available at the time of promulgation is subsequently demonstrated to have been clearly inadequate; and (2) other information persuasively supports a change in the action. *See,* e.g., 57 FR 56762, 56763 (November 30, 1992) (correcting designations, boundaries, and classifications of ozone, carbon monoxide, particulate matter and lead areas).

EPA Proposed Action

EPA has reviewed the rules previously incorporated into the American Samoa, Arizona, California, Hawaii, and Nevada SIPs and has determined that the rules summarized in Table 1 were approved in error. These rules include administrative provisions regarding variances, hearing board procedures, and fee provisions.

Therefore, EPA is proposing to delete the rules summarized in Table 1 from these SIPs under section 110(k)(6) of the Act, which gives EPA the authority to revise the existing SIP by removing the referenced rules from the above-referenced SIPs without additional State submission.

Nothing in this action should be construed as permitting or allowing or establishing a precedent for any future request for revision to any state implementation plan. Each request for revision to the state implementation plan shall be considered separately in light of specific technical, economic, and environmental factors and in relation to relevant statutory and regulatory requirements.

Regulatory Process

Under the Regulatory Flexibility Act, 5 U.S.C. 600 et seq., EPA must prepare a regulatory flexibility analysis assessing the impact of any proposed or final rule on small entities. 5 U.S.C. 603 and 604. Alternatively, EPA may certify that the rule will not have a significant impact on a substantial number of small entities. Small entities include small businesses, small not-for-profit enterprises and government entities with jurisdiction over population of less than 50,000.

SIP approvals under sections 110 and 301(a) and subchapter I, Part D of the CAA do not create any new requirements, but simply approve requirements that the State is already imposing. Therefore, because the Federal SIP-approval does not impose any new requirements, I certify that it does not have a significant impact on any small entities affected. Moreover, due to the nature of the Federal-state relationship under the CAA, preparation of a regulatory flexibility analysis would constitute Federal inquiry into the economic reasonableness of state action. The CAA forbids EPA to base its actions concerning SIPs on such grounds. *Union Electric Co.* v. *U.S. E.P.A.*, 427 U.S. 246, 256–66 (S. Ct. 1976); 42 U.S.C. 7410 (a)(2).

Unfunded Mandates

Under Sections 202, 203, and 205 of the Unfunded Mandates Reform Act of 1995 (''Unfunded Mandates Act''), signed into law on March 22, 1995, EPA must undertake various actions in association with proposed or final rules that include a Federal mandate that may result in estimated costs of $100 million or more to the private sector or to State, local, or tribal governments in the aggregate.

The rules being proposed for removal by this action will not result in the imposition of new requirements.

This action has been classified as a Table 3 action for signature by the Regional Administrator under the procedures published in the Federal Register on January 19, 1989 (54 FR 2214–2225), as revised by a July 10, 1995 memorandum from Mary Nichols, Assistant Administrator for Air and Radiation. The Office of Management and Budget (OMB) has exempted this regulatory action from Executive Order 12866 review.

List of Subjects in 40 CFR Part 52

Environmental protection, Air pollution control, Carbon monoxide, Hydrocarbons, Intergovernmental relations, Nitrogen dioxide, Ozone, Particulate matter, Reporting and recordkeeping requirements, Volatile organic compounds.

Authority: 42 U.S.C. 7401–7671q.

Dated: July 11, 1996.

Felicia Marcus,

Regional Administrator.

TABLE 1.—STATE OF ARIZONA

Regulation	Rule No.	Rule name	Submit date	Approval date
Arizona Dept. of Environmental Quality				
Revised Statutes	36–781	Violations; Order of Abatement; Time for Compliance	07/13/81	06/18/82
	36–782	Hearings on Orders of Abatement	07/13/81	06/18/82
	36–784	Conditional Permit; Standards	07/13/81	06/18/82
	36–784.01	Petition for Conditional Permit; Publication; Public Hearing	07/13/81	06/18/82
	36–784.02	Decisions on Petitions for Conditional Permit: Terms	07/13/81	06/18/82
	36–784.03	Term of Conditional Permit	07/13/81	06/18/82
	36–784.04	Suspension and Revocation of Conditional Permit	07/13/81	06/18/82
	36–785	Decisions of Hearing Board; Subpoenas Effective Date	07/13/81	06/18/82
	36–785.01	Judicial Review; Grounds; Procedures	07/13/81	06/18/82
	36–786	Notice of Hearing; Publication; Service	07/13/81	06/18/82
	36–787	Injunctive Relief	07/13/81	06/18/82
	36–788	Precedence of Actions	07/13/81	06/18/82
	36–1709	Violations; Order of Abatement; Time for Compliance	08/05/81	06/18/82
	36–1710	Hearings on Orders of Abatement	08/05/81	06/18/82
	36–1711	Temporary Conditional Permits	08/05/81	06/18/82
	36–1712	Conditional Permit; Standards	08/05/81	06/18/82
	36–1712.01	Petition for Conditional Permit; Public Hearing	08/05/81	06/18/82
	36–1712.02	Decisions on Petitions for Conditional Permit; Terms	08/05/81	06/18/82
	36–1712.03	Term of Conditional Permit	08/05/81	06/18/82
	36–1712.04	Suspension and Revocation of Conditional Permit	08/05/81	06/18/82
	36–1713	Decisions of Hearing Board; Subpoenas; Effective Date	08/05/81	06/18/82
	36–1713.01	Judicial Review; Grounds; Procedures	08/05/81	06/18/82
	36–1714	Notice of Hearing; Publication; Service	08/05/81	06/18/82
	36–1715	Injunctive Relief	08/05/81	06/18/82
	36–1716	Precedence of Actions	08/05/81	06/18/82
Coconino County APCD				
12–7 Violations	12–7–2.	Order of Abatement	07/01/75	11/15/78
	12–07–3.	Hearings on Orders of Abatement	07/01/75	11/15/78
	12–07–5.	Notice of Hearing, Publication, Service	07/01/75	11/15/78

TABLE 1.—STATE OF ARIZONA—Continued

Regulation	Rule No.	Rule name	Submit date	Approval date
	12–07–6.	Injunctive Relief	07/01/75	11/15/78
Maricopa County APCD				
VI Violations	60	Order of Abatement; Hearings	05/30/72	09/22/72
	61	Conditional Permit; Petition for Conditional Permit	05/30/72	09/22/72
	62	Appeals to the Hearing Board	05/30/72	09/22/72
	63	Decisions on Petitions for Conditional Permit; Terms	05/30/72	09/22/72
	64	Decisions of Hearing Board; Subpoenas; Effective Date	05/30/72	09/22/72
	65	Notice of Hearing; Publication; Service	05/30/72	09/22/72
	66	Injunctive Relief	05/30/72	09/22/72
	67	Misdemeanor; Penalty	05/30/72	09/22/72
Ch. I: General Provisions:				
14—Hearing Board	141	Establishment	10/09/79	04/16/82
	142	Composition	06/01/81	04/16/82
	143	Terms; Nominations	10/09/79	04/16/82
	144	Function	10/09/79	04/16/82
	145	Officers; Procedures	10/09/79	04/16/82
	146	Meetings; Hearings	10/09/79	04/16/82
	147	Compensation; Absences	10/09/79	04/16/82
Ch. VII: Violations & Judicial Procedures:				
70: Violation	702	Order of Abatement	10/09/79	04/16/82
71—Condition	711	Legal Authority	10/09/79	04/16/82
(Variances)	712	General Procedures	10/09/79	04/16/82
	713	Judicial Review	10/09/79	04/16/82
	714	Time Limitations Regarding Hearing	10/09/79	04/16/82
Pinal-Gila County APCD				
7–1–4–Order	7–1–4.1	Violations: Orders of Abatement, Time for Compliance	07/01/75	11/15/78
Abatement	7–1–4.2	Hearings on Order of Abatement	07/01/75	11/15/78
7–1–5–Rev	7–1–5.1	Classification and Reporting: Production of Records	07/01/75	11/15/78
Procedures	7–1–5.2	Special Inspection Warrant	07/01/75	11/15/78
	7–1–5.3	Decisions of Hearing Boards: Subpoenas Effective Date	07/01/75	11/15/78
	7–1–5.4	Judicial Review: Grounds, Procedures	07/01/75	11/15/78
	7–1–5.5	Notice of Hearing, Publication, Service	07/01/75	11/15/78
	7–1–5.6	Injunctive Relief	07/01/75	11/15/78

STATE OF CALIFORNIA

Regulation	Rule No.	Rule name	Submit date	Approval date
Amador County APCD				
VI—Fees	605	Hearing Board Fees	10/15/79	05/18/81
VII—Procedure Before the Hearing Board.	700	Applicable Articles of the Health	10/15/79	05/18/81
	701	General	10/15/79	05/18/81
	702	Filing Petitions	10/15/79	05/18/81
	703	Contents of Petitions	10/15/79	05/18/81
	704	Petitions for Variances	10/15/79	05/18/81
	705	Appeal for Denial	04/21/76	06/14/78
	706	Failure to Comply with Rules	04/21/76	01/24/78
	707	Answers	04/21/76	01/24/78
	708	Dismissal of Petition	04/21/76	01/24/68
	709	Place of Hearing	04/21/76	01/24/68
	710	Notice of Hearing	10/15/79	05/18/81
	711	Evidence	10/15/79	05/18/81
	712	Preliminary Matters	04/21/76	01/24/68
	713	Official Notice	04/21/76	01/24/68
	714	Continuances	04/21/76	01/24/68
	715	Decision	04/21/76	01/24/68
	716	Effective Date of Decision	04/21/76	01/24/68

STATE OF CALIFORNIA—Continued

Regulation	Rule No.	Rule name	Submit date	Approval date
		Bay Area AQMD		
III—Fees	301	Hearing Board Fees	08/30/83	05/03/84
		Butte County APCD		
VII—Procedure Before the Hearing Board.	601	General	02/10/86	02/03/87
	602	Filing Petitions	02/10/86	02/03/87
	603	Contents of Petitions	02/10/86	02/03/87
	604	Petitions for Variances	02/10/86	02/03/87
	605	Petition for Revocation of Permit	02/10/86	02/03/87
	606	Petition for Reinstatement of Suspended Permit	02/10/86	02/03/87
	607	Noncompliance with District Rules	02/10/86	02/03/87
	608	Answers	02/10/86	02/03/87
	609	Dismissal of Petition	02/10/86	02/03/87
	610	Time and Place of Hearing	02/10/86	02/03/87
	611	Notice and Hearing	02/10/86	02/03/87
	612	Interested Members of Public; Special Notice	02/10/86	02/03/87
	613	Evidence	02/10/86	02/03/87
	614	Preliminary Matters	02/10/86	02/03/87
	615	Official Notice	02/10/86	02/03/87
	616	Continuances	02/10/86	02/03/87
	617	Decision	02/10/86	02/03/87
	618	Effective Date of Decision	02/10/86	02/03/87
	620	Appeal from Denial	02/10/86	02/03/87
	621	Appeal and Petition for Variance after Permit Denial	02/10/86	02/03/87
VIII—Variances	801	Request for Variance	02/10/86	02/03/87
	802	Conditions for Granting Variances	02/10/86	02/03/87
		Calaveras County APCD		
VI—Fees	305	Hearing Board Fees	06/30/72	09/22/72
VII—Procedure Before the Hearing Board.	700	Applicable Articles of the Health & Safety Code	07/22/75	08/22/77
	701	General	07/22/75	08/22/77
	702	Filing Petitions	07/22/75	08/22/77
	703	Contents of Petitions	07/22/75	08/22/77
	704	Petitions for Variances	07/22/75	08/22/77
	705	Appeal for Denial	07/22/75	08/22/77
	706	Failure to Comply with Rules	07/22/75	08/22/77
	707	Answers	07/22/75	08/22/77
	708	Dismissal of Petition	07/22/75	08/22/77
	709	Place of Hearing	10/13/77	11/07/78
	710	Notice of Hearing	07/22/75	08/22/77
	711	Evidence	07/22/75	08/22/77
	712	Preliminary Matters	07/22/75	08/22/77
	713	Official Notice	07/22/75	08/22/77
	714	Continuances	07/22/75	08/22/77
	715	Decision	10/13/77	11/07/78
	716	Effective Date of Decision	07/22/75	08/22/77
		Colusa County APCD		
III—Fees	3.1	Hearing Board Fees	06/30/72	09/22/72
V—Procedure Before the Hearing Board.	5.1	Applicable Articles of the Health & Safety Code	06/30/72	09/22/72
	5.2	General	06/30/72	09/22/72
	5.3	Filing Petitions	06/30/72	09/22/72
	5.4	Contents of Petitions	06/30/72	09/22/72
	5.5	Petitions for Variances	06/30/72	09/22/72
	5.6	Failure to Comply with Rules	06/30/72	09/22/72
	5.7	Answers	06/30/72	09/22/72
	5.8	Dismissal of Petition	06/30/72	09/22/72
	5.9	Place of Hearing	06/30/72	09/22/72
	5.10	Notice of Hearing	06/30/72	09/22/72
	5.11	Evidence	06/30/72	09/22/72
	5.12	Record of Proceedings	06/30/72	09/22/72
	5.13	Preliminary Matters	06/30/72	09/22/72

STATE OF CALIFORNIA—Continued

Regulation	Rule No.	Rule name	Submit date	Approval date
	5.14	Official Notice	06/30/72	09/22/72
	5.15	Continuances	06/30/72	09/22/72
	5.16	Decision	06/30/72	09/22/72
	5.17	Effective Date of Decision	06/30/72	09/22/72
		Fresno County APCD		
III—Fees	305	Hearing Board Fees	10/15/79	12/09/81
V—Procedure Before the Hearing Board.	501	Applicable Articles of the Health	06/30/72	09/22/72
	502	General	06/30/72	09/22/72
	503	Filing Petitions	01/10/75	08/22/77
	504	Contents of Petitions	06/30/72	09/22/72
	505	Petitions for Variances	10/13/74	08/22/77
	506	Appeal for Denial	06/30/72	09/22/72
	507	Failure to Comply with Rules	01/10/75	08/22/77
	508	Answers	06/30/72	09/22/72
	509	Dismissal of Petition	06/30/72	09/22/72
	510	Place of Hearing	06/30/72	09/22/72
	511	Notice of Hearing	06/30/72	09/22/72
	512	Evidence	06/30/72	09/22/72
	513	Preliminary Matters	01/10/75	08/22/77
	514	Official Notice	06/30/72	09/22/72
	515	Continuances	01/10/75	08/22/77
	516	Decision	06/30/72	09/22/72
	517	Effective Date of Decision	06/30/72	09/22/72
		Glenn County APCD		
V—Hearing Board	110	Appl. Articles of the Health & Safety Code	11/03/80	01/26/82
	111	Filing Petitions	01/10/75	05/11/77
	112	Contents of Petitions	11/03/80	01/26/82
	113	Petitions for Variances	01/10/75	05/11/77
	114	Appeal for Denial	01/10/75	05/11/77
	115	Failure to Comply with Rules	01/10/75	05/11/77
	116	Dismissal of Petition	01/10/75	05/11/77
	117	Place of Hearing	01/10/75	05/11/77
	118	Notice of Hearing	01/10/75	05/11/77
	119	Evidence	01/10/75	05/11/77
	120	Record of Proceedings	01/10/75	05/11/77
	121	Preliminary Matters	01/10/75	05/11/77
	122	Official Notice	01/10/75	05/11/77
	123	Continuances	01/10/75	05/11/77
	124	Decision	01/10/75	05/11/77
	125	Effective Date of Decision	01/10/75	05/11/77
VI—Fees	150	Hearing Board Fees	01/10/75	05/11/77
		Great Basin APCD		
	600	General	04/21/76	06/06/77
	601	Filing Petitions	04/21/76	06/06/77
	602	Contents of Petitions	04/21/76	06/06/77
	603	Petitions for Variances	04/21/76	06/06/77
	604	Appeal from Denial	04/21/76	06/06/77
	605	Failure to Comply with Rules	04/21/76	06/06/77
	606	Answers	04/21/76	06/06/77
	607	Withdrawal of Petition	04/21/76	06/06/77
	608	Place of Hearing	04/21/76	06/06/77
	609	Notice of Hearing	04/21/76	06/06/77
	610	Evidence	04/21/76	06/06/77
	611	Record of Proceedings	04/21/76	06/06/77
	612	Preliminary Matters	04/21/76	06/06/77
	613	Official Notice	04/21/76	06/06/77
	614	Continuances	04/21/76	06/06/77
	615	Decision	04/21/76	06/06/77
	617	Emergency Variances	12/17/79	01/27/81
VIII—Orders Abatement	800	General	04/21/76	06/06/77
	801	Order for Abatement	04/21/76	06/06/77
	802	Filing Petitions	04/21/76	06/06/77

STATE OF CALIFORNIA—Continued

Regulation	Rule No.	Rule name	Submit date	Approval date
	803	Contents of Petitions	04/21/76	06/06/77
	804	Scope of Order	04/21/76	06/06/77
	805	Findings	04/21/76	06/06/77
	806	Pleading	04/21/76	06/06/77
	807	Evidence	04/21/76	06/06/77
	808	Failure to Comply with Rules	04/21/76	06/06/77
	809	Withdrawal of Petition	04/21/76	06/06/77
	810	Place of Hearing	04/21/76	06/06/77
	811	Notice of Hearing	04/21/76	06/06/77
	812	Preliminary Matters	04/21/76	06/06/77
	813	Official Notice	04/21/76	06/06/77
	814	Continuance	04/21/76	06/06/77
	815	Order and Decision	04/21/76	06/06/77
	816	Effective Date of Decision	04/21/76	06/06/77
	817	Record of Proceedings	04/21/76	06/06/77
Imperial County APCD				
III—Fees	305	Hearing Board Fees	10/23/81	05/27/82
V—Procedure Before the Hearing Board.	501	General	11/04/77	08/11/78
	502	Filing Petitions	11/04/77	08/11/78
	503	Contents of Petitions	11/04/77	08/11/78
	504	Petitions for Variances	11/04/77	08/11/78
	505	Supplemental Information	11/04/77	08/11/78
	506	Matters Initiated by Control Officer or Hearing Board	11/04/77	08/11/78
	507	Answers	11/04/77	08/11/78
	508	Withdrawal of Petition	11/04/77	08/11/78
	509	Preliminary Matters	11/04/77	08/11/78
	510	Time and Place of Meeting	11/04/77	08/11/78
	511	Notice of Hearing	11/04/77	08/11/78
	512	Record of Proceedings	11/04/77	08/11/78
	514	Evidence	11/04/77	08/11/78
	515	Official Notice	11/04/77	08/11/78
	516	Decisions	11/04/77	08/11/78
	517	Emergency Variance	12/24/79	01/27/81
Kern County APCD				
I—General Provisions	105	Order for Abatement	11/10/76	03/22/78
III—Fees	305	Hearing Board Fees	07/30/81	07/06/82
V—Procedure Before the Hearing Board.	501	Applicable Articles of the Health	11/10/76	03/22/78
	502	General	06/30/72	09/22/72
	503	Filing Petitions	05/23/79	08/11/80
	504	Contents of Petitions	11/10/76	03/22/78
	505	Petitions for Variances	06/30/72	09/22/72
	506	Appeal for Denial	06/30/72	09/22/72
	507	Failure to Comply with Rules	06/30/72	09/22/72
	508	Answers	06/30/72	09/22/72
	509	Dismissal of Petition	06/30/72	09/22/72
	510	Place of Hearing	06/30/72	09/22/72
	511	Notice of Hearing	11/10/76	03/22/78
	512	Evidence	06/30/72	09/22/72
	513	Preliminary Matters	06/30/72	09/22/72
	514	Official Notice	06/30/72	09/22/72
	515	Continuances	06/30/72	09/22/72
	516	Decision	07/19/74	08/22/77
	517	Effective Date of Decision	06/30/72	09/22/72
I—General Provisions	105	Order for Abatement	11/10/76	03/22/78
III—Fees	305	Hearing Board Fees	07/30/81	07/06/82
V—Procedure Before the Hearing Board.	501	Appl. Articles of the Health & Safety Code	11/10/76	03/22/78
	502	General	06/30/72	09/22/72
	503	Filing Petitions	05/23/79	08/11/80
	504	Contents of Petitions	11/10/76	03/22/78
	505	Petitions for Variances	06/30/72	09/22/72
	506	Appeal for Denial	06/30/72	09/22/72
	507	Failure to Comply with Rules	06/30/72	09/22/72
	508	Answers	06/30/72	09/22/72

STATE OF CALIFORNIA—Continued

Regulation	Rule No.	Rule name	Submit date	Approval date
	509	Dismissal of Petition	06/30/72	09/22/72
	510	Place of Hearing	06/30/72	09/22/72
	511	Notice of Hearing	11/10/76	03/22/78
	512	Evidence	06/30/72	09/22/72
	513	Preliminary Matters	06/30/72	09/22/72
	514	Official Notice	06/30/72	09/22/72
	515	Continuances	06/30/72	09/22/72
	516	Decision	07/19/74	08/22/77
	517	Effective Date of Decision	06/30/72	09/22/72
Kings County APCD				
I—General Provisions	105	Order for Abatement	11/04/77	08/04/78
III—Fees	302	Hearing Board Fees	10/15/79	10/09/81
V—Procedure Before the Hearing Board.	501	Applicable Articles of the Health	11/04/77	08/04/78
	502	General	06/30/72	09/22/72
	503	Filing Petitions	06/30/72	09/22/72
	504	Contents of Petitions	06/30/72	09/22/72
	505	Petitions for Variances	06/30/72	09/22/72
	506	Appeal for Denial	06/30/72	09/22/72
	507	Failure to Comply with Rules	06/30/72	09/22/72
	508	Answers	06/30/72	09/22/72
	509	Dismissal of Petition	06/30/72	09/22/72
	510	Place of Hearing	07/25/73	08/22/77
	511	Notice of Hearing	06/30/72	09/22/72
	512	Evidence	06/30/72	09/22/72
	513	Preliminary Matters	06/30/72	09/22/72
	514	Official Notice	06/30/72	09/22/72
	515	Continuances	06/30/72	09/22/72
	516	Decision	06/30/72	09/22/72
	517	Effective Date of Decision	06/30/72	09/22/72
	519	Emergency Variance	10/15/79	06/18/82
Lake County APCD				
Ch. I—General Provisions	300	Hearing Board	02/10/77	08/04/78
Ch. VI, Chapter IX Hearing Board.	301	Meeting Compensation	03/30/81	04/13/82
	800	Orders of Abatement	02/10/77	08/04/78
	1600	Public Hearing	02/10/77	08/04/78
	1601	Notice	02/10/77	08/04/78
	1602	Petition Procedures	03/30/81	04/13/82
	1610	Decisions	02/10/77	08/04/78
	1611	Effective Date	02/10/77	08/04/78
	1612	Transcripts	02/10/77	08/04/78
	1620	Fees	02/10/77	08/04/78
Chapter X Variances: Article I Interim Variances				
	1700		02/10/77	08/04/78
	1701		02/10/77	08/04/78
Article II Variance	1710		02/10/77	08/04/78
	1711		02/10/77	08/04/78
	1712		02/10/77	08/04/78
	1713		02/10/77	08/04/78
	1714		02/10/77	08/04/78
Article III Increments of Progress.				
	1720		02/10/77	08/04/78
	1721		02/10/77	08/04/78
	1722		02/10/77	08/04/78
	1723		02/10/77	08/04/78
	1724		02/10/77	08/04/78
	1725		02/10/77	08/04/78
Article IV Procedure.				
	1730		02/10/77	08/04/78
	1731		02/10/77	08/04/78
	1732		02/10/77	08/04/78
	1733		02/10/77	08/04/78
	1734		02/10/77	08/04/78

STATE OF CALIFORNIA—Continued

Regulation	Rule No.	Rule name	Submit date	Approval date
	1735		02/10/77	08/04/78
	1736		02/10/77	08/04/78
Tables I–IV Table VI		Schedule of Fees for Permit	03/30/81	04/13/82
I—General Provisions	1.5	Order for Abatement	06/30/72	09/22/72
III—Fees	3.1	Hearing Board Fees	06/30/72	09/22/72
V—Procedure	5.1	Appl. Articles of the Health & Safety Code	06/30/72	09/22/72
Before the Hearing Board	5.2	General	06/30/72	09/22/72
	5.3	Filing Petitions	06/30/72	09/22/72
	5.4	Contents of Petitions	06/30/72	09/22/72
	5.5	Petitions for Variances	06/30/72	09/22/72
	5.6	Appeal for Denial	06/30/72	09/22/72
	5.7	Failure to Comply with Rules	06/30/72	09/22/72
	5.8	Answers	06/30/72	09/22/72
	5.9	Dismissal of Petition	06/30/72	09/22/72
	5.10	Place of Hearing	06/30/72	09/22/72
	5.11	Notice of Hearing	06/30/72	09/22/72
	5.12	Record of Proceedings	06/30/72	09/22/72
	5.13	Preliminary Matters	06/30/72	09/22/72
	5.14	Official Notice	06/30/72	09/22/72
	5.15	Continuances	06/30/72	09/22/72
	5.16	Decision	06/30/72	09/22/72
	5.17	Effective Date of Decision	06/30/72	09/22/72
I—General Provisions	106	Order for Abatement	02/07/89	04/16/91
III—Fees	305	Hearing Board Fees	04/11/83	11/18/83
V—Procedure Before the Hearing Board.	501	Applicable Articles of the Health	02/07/89	04/16/91
	502	General	04/11/83	11/18/83
	503	Filing Petitions	04/11/83	11/18/83
	504	Contents of Petitions	02/07/89	04/16/91
	505	Petitions for Variances	02/07/89	04/16/91
	506	Appeal for Denial	02/07/89	04/16/91
	507	Failure to Comply with Rules	06/03/72	09/22/72
	508	Answers	06/03/72	09/22/72
	509	Dismissal of Petition	06/03/72	09/22/72
	510	Place of Hearing	06/03/72	09/22/72
	511	Notice of Hearing	10/15/79	12/09/81
	512	Evidence	06/30/72	09/22/72
	513	Preliminary Matters	06/30/72	09/22/72
	514	Official Notice	06/30/72	09/22/72
	515	Continuances	06/30/72	09/22/72
	516	Decision	06/30/72	09/22/72
	517	Effective Date of Decision	06/30/72	09/22/72
	519	Emergency Variance	02/07/89	04/16/91
Mariposa County APCD				
VI—Procedure Before the Hearing Board.	600	Appl. Articles of the Health & Safety Code	06/06/77	08/16/78
	601	General	01/10/75	08/22/77
	602	Filing Petitions	06/06/77	08/16/78
	603	Contents of Petitions	06/06/77	08/16/78
	604	Petitions for Variances	01/10/75	08/22/77
	605	Appeal for Denial	01/10/75	08/22/77
	606	Failure to Comply with Rules	01/10/75	08/22/77
	607	Answers	01/10/75	08/22/77
	608	Dismissal of Petition	01/10/75	08/22/77
	609	Place of Hearing	01/10/75	08/22/77
	610	Notice of Hearing	06/06/77	08/16/78
	611	Evidence	01/10/75	08/22/77
	612	Preliminary Matters	01/10/75	08/22/77
	613	Official Notice	01/10/75	08/22/77
	614	Continuances	01/10/75	08/22/77
	615	Decision	01/10/75	08/22/77
	616	Effective Date of Decision	01/10/75	08/22/77
	618	Hearing Board Fees	01/10/77	08/22/77
Mendocino County APCD				
III—Fees	320	Hearing Board Fees	05/23/79	10/13/80
V—Enforcement	510	Orders for Abatement	11/10/76	11/07/78

STATE OF CALIFORNIA—Continued

Regulation	Rule No.	Rule name	Submit date	Approval date
VI—Hearing and Variance Procedures.	600	Authorization	04/19/84	12/05/84
	610	Petition Procedure	04/19/84	12/05/84
	615	Emergency Variances	05/07/79	11/10/82
	616	Interim Variance	08/06/82	11/10/82
	618	Modification of Increments of Progress Sch.	08/06/82	11/10/82
	620	Hearing Board	11/10/76	11/07/78
	640	Record of Proceedings	11/10/76	11/07/78
	650	Appeal of Decision	11/10/76	11/07/78
		Part XI Hearing Board	02/21/72	05/31/72
		Part XII Variances	02/21/72	05/31/72
		Part XIII Meetings	02/21/72	05/31/72
I—General Provisions	105	Order for Abatement	08/02/76	06/14/78
III—Fees	305	Hearing Board Fees	07/19/83	02/01/84
V—Procedure Before the Hearing Board..	501	Appl. Articles of the Health & Safety Code	08/02/76	06/14/78
	502	General	06/30/72	09/22/72
	503	Filing Petitions	06/30/72	09/22/72
	504	Contents of Petitions	08/02/76	06/14/78
	506	Appeal for Denial	06/30/72	09/22/72
	507	Failure to Comply with Rules	06/30/72	09/22/72
	508	Answers	06/30/72	09/22/72
	509	Dismissal of Petition	06/30/72	09/22/72
	510	Place of Hearing	08/02/76	06/14/78
	512	Evidence	06/30/72	09/22/72
	513	Preliminary Matters	06/30/72	09/22/72
	514	Official Notice	06/30/72	09/22/72
	515	Continuances	06/30/72	09/22/72
	516	Decision	06/30/72	09/22/72
	517	Effective Date of Decision	06/30/72	09/22/72
	519	Emergency Variance	07/19/83	02/01/84
Modoc County APCD				
I—General Provisions	1.5	Order for Abatement	06/30/72	09/22/72
IV—Procedure Before the Hearing Board.	4.1	Appl. Articles of the Health & Safety Code	06/30/72	09/22/72
	4.2	General	06/30/72	09/22/72
	4.3	Filing Petitions	06/30/72	09/22/72
	4.4	Contents of Petitions	06/30/72	09/22/72
	4.5	Petitions for Variances	06/30/72	09/22/72
	4.6	Failure to Comply with Rules	06/30/72	09/22/72
	4.7	Answers	06/30/72	09/22/72
	4.8	Dismissal of Petition	06/30/72	09/22/72
	4.9	Place of Hearing	06/30/72	09/22/72
	4.10	Notice of Hearing	06/30/72	09/22/72
	4.11	Evidence	06/30/72	09/22/72
	4.12	Record of Proceedings	06/30/72	09/22/72
	4.13	Preliminary Matters	06/30/72	09/22/72
	4.14	Official Notice	06/30/72	09/22/72
	4.15	Continuances	06/30/72	09/22/72
	4.16	Hearing and Decision	06/30/72	09/22/72
	4.17	Effective Date of Decision	06/30/72	09/22/72
Mojave Desert AQMD (Los Angeles [LA], Riverside, San Bernardino [SB])				
V—Procedure Before the Hearing.		LA–501 General	02/10/76	09/22/72
		LA–502 Filing Petitions	06/06/77	09/08/78
		LA–509 Place of Hearing	06/06/77	09/08/78
		Riverside General-501	11/04/77	12/21/78
		Riverside Filing Petitions-502	02/10/76	06/14/78
		Riverside Place of Hearing-509	06/06/77	09/08/78
		SB General 501	11/04/77	12/21/78
		SB Assistance to Small Business 501.1	05/23/79	01/27/81
		SB Filing Petitions 502	11/04/77	12/21/78
		SB Place of Hearing 509	11/04/77	12/21/78

STATE OF CALIFORNIA—Continued

Regulation	Rule No.	Rule name	Submit date	Approval date
		LA, Riverside, San Bernardino		
	503	Contents of Petitions	06/22/78	03/28/79
	504	Petitions for Variances	06/06/77	06/14/78
	505	Appeal from Denial	08/02/76	06/14/78
	506	Failure to Comply with Rules	06/06/77	06/14/78
	507	Pleading	06/06/77	06/14/78
	508	Dismissal of Petition	06/06/77	06/14/78
	509	Notice of Hearing	06/06/77	06/14/78
	510	Evidence	06/06/77	06/14/78
	511	Preliminary Matters	06/06/77	06/14/78
	512	Official Notice	06/06/77	06/14/78
	513	Continuances	06/06/77	06/14/78
	514	Decision	06/06/77	06/14/78
	515	Effective Date of Decision	06/06/77	06/14/78
	517	Findings	06/06/77	06/14/78
VIII—Orders for Abatement	801	General	06/06/77	09/08/78
	802	Order for Abatement	06/06/77	09/08/78
	803	Filing Petitions	06/06/77	09/08/78
	804	Contents of Petitions	06/06/77	09/08/78
	805	Scope of Order	06/06/77	09/08/78
	806	Findings	06/06/77	09/08/78
	807	Pleading	06/06/77	09/08/78
	808	Evidence	06/06/77	09/08/78
	809	Failure to Comply with Rules	06/06/77	09/08/78
	810	Withdrawal of Petition	06/06/77	09/08/78
	811	Place of Hearing	06/06/77	09/08/78
	812	Notice of Hearing	06/06/77	09/08/78
	813	Preliminary Matters	06/06/77	09/08/78
	814	Official Notice	06/06/77	09/08/78
	815	Continuance	06/06/77	09/08/78
	816	Order and Decision	06/06/77	09/08/78
	817	Effective Date of Decision	06/06/77	09/08/78
VI—Procedure Before the Hearing Board.	600	General	02/06/85	07/13/87
	601	Filing Petitions	02/06/85	07/13/87
	602	Contents of Petitions	02/06/85	07/13/87
	603	Petitions for Variances	02/06/85	07/13/87
	604	Appeal from Denial	02/06/85	07/13/87
	605	Failure to Comply with Rules	02/06/85	07/13/87
	606	Answers	02/06/85	07/13/87
	607	Withdrawal of Petition	02/06/85	07/13/87
	608	Place of Hearing	02/06/85	07/13/87
	609	Notice of Hearing	02/06/85	07/13/87
	610	Evidence	02/06/85	07/13/87
	611	Record of Proceedings	02/06/85	07/13/87
	612	Preliminary Matters	02/06/85	07/13/87
	613	Official Notice	02/06/85	07/13/87
	614	Continuances	02/06/85	07/13/87
	615	Decision	02/06/85	07/13/87
	616	Effective Date of Decision	02/06/85	07/13/87
	617	Emergency Variances	02/06/85	07/13/87
VIII—Orders Abatement	800	General	02/06/85	07/13/87
	801	Order for Abatement	02/06/85	07/13/87
	802	Filing Petitions	02/06/85	07/13/87
	803	Contents of Petitions	02/06/85	07/13/87
	804	Scope of Order	02/06/85	07/13/87
	805	Findings	02/06/85	07/13/87
	806	Pleading	02/06/85	07/13/87
	807	Evidence	02/06/85	07/13/87
	808	Failure to Comply with Rules	02/06/85	07/13/87
	809	Withdrawal of Petition	02/06/85	07/13/87
	810	Place of Hearing	02/06/85	07/13/87
	811	Notice of Hearing	02/06/85	07/13/87
	812	Preliminary Matters	02/06/85	07/13/87
	813	Official Notice	02/06/85	07/13/87
	814	Continuance	02/06/85	07/13/87
	815	Order and Decision	02/06/85	07/13/87
	816	Effective Date of Decision	02/06/85	07/13/87

STATE OF CALIFORNIA—Continued

Regulation	Rule No.	Rule name	Submit date	Approval date
Northern Sierra AQMD (Nevada/Plumas/Sierra)				
IV—Permit Says	404	Emergency Variance Procedures	10/15/79	05/18/81
Reg V-Permit	522	Analysis Fees	06/22/81	04/23/82
Operate Regs	523	Permit Fees	06/06/77	09/14/78
Reg VI-Procedure Before the Hearing Board.	601	General	06/06/77	09/14/78
	602	Filing Petitions	06/06/77	09/14/78
	604	Petition for Variance	06/06/77	09/14/78
	605	Appeal from Denial	06/06/77	09/14/78
	606	Failure to Comply Rules	06/06/77	09/14/78
	607	Answers	06/06/77	09/14/78
	608	Dismissal of Petition	06/06/77	09/14/78
	609	Place of Hearing	06/06/77	09/14/78
	611	Evidence	06/06/77	09/14/78
VII—Procedure Before the Hearing Board.	700	Appl. Articles of the Health & Safety Code	06/06/77	09/14/78
	701	General	04/10/75	06/14/78
	702	Filing Petitions	04/10/75	06/14/78
	703	Contents of Petitions	04/10/75	06/14/78
	704	Petitions for Variances	06/06/77	09/14/78
	705	Appeal from Denial	06/06/77	09/14/78
	706	Failure to Comply with Rules	06/06/77	09/14/78
	707	Answers	06/06/77	09/14/78
	708	Dismissal of Petition	06/06/77	09/14/78
	709	Place of Hearing	06/06/77	09/14/78
	710	Notice of Public Hearing	06/06/77	09/14/78
	711	Evidence	06/06/77	09/14/78
	712	Preliminary Matters	04/10/75	06/14/78
	713	Official Notice	04/10/75	06/14/78
	714	Continuances	04/10/75	06/14/78
	715	Decision	04/10/75	06/14/78
	716	Effective Date of Decision	04/10/75	06/14/78
North Coast Unified AQMD				
III—Fees	300	Permit Fees	10/23/81	04/13/82
	310	Permit Fee Schedules	10/23/81	04/13/82
	320	Hearing Board Fees	05/23/79	10/31/80
	340	Technical Report—Charges For	11/10/76	08/02/78
	350	Fuel Burning and Power Generation Surcharges	02/03/83	11/18/83
V—Enforcement & Penalty Acts.	510	Orders for Abatement	11/10/76	08/02/78
VI—Hearing Board & Variance Procedures.	600	Authorization	03/14/84	12/05/84
	610	Petition Procedure	03/14/84	12/05/84
	615	Emergency Variances	05/07/79	10/31/80
	616	Interim Variance	08/06/82	11/10/82
	618	Modification of Increments of Progress Sch.	08/06/82	11/10/82
	620	Hearing Procedures	11/10/76	08/02/78
	630	Decisions	11/10/76	08/02/78
	640	Record of Proceedings	11/10/76	08/02/78
	650	Appeal of Decision	11/10/76	08/02/78
Northern Sonoma County APCD				
III—Fees	300	Permit Fees	10/23/81	04/13/82
	310	Permit Fee Schedules	10/23/81	04/13/82
	320	Hearing Board Fees	05/07/79	10/31/80
	340	Technical Reports—Charges For	11/10/76	08/16/78
V—Enforcement & Penalty Acts.	510	Orders for Abatement	11/10/76	08/16/78
VI—Hearing Board & Variance Procedures.	600	Authorization	11/10/76	08/16/78
VII—Procedure Before the Hearing Board.	610	Petition Procedures	11/10/76	08/16/78
	615	Emergency Variance	05/07/79	10/31/80
	620	Hearing Procedures	11/10/76	08/16/78
	630	Decisions	11/10/76	08/16/78
	640	Record of Proceedings	11/10/76	08/16/78

STATE OF CALIFORNIA—Continued

Regulation	Rule No.	Rule name	Submit date	Approval date
	650	Appeal of Decision	11/10/76	08/16/78
Placer County APCD (Mountain Counties Air Basin Portion)				
IV—Misc. Provisions	404	Upset Conditions, Breakdown, or Scheduled Maintenance	10/15/79	05/18/81
VI—Fees	42	Technical Reports, Charges for	02/21/72	05/31/72
	601	Permit Fees	05/28/81	04/23/82
	602	Hearing Board Fees	10/15/79	05/18/81
	603	Analysis Fees	05/23/79	05/18/81
VII—Procedure Before the Hearing Board.	701	General	01/10/75	06/14/78
	702	Filing Petitions Hearing Board	05/28/81	04/23/82
	703	Contents of Petitions	10/13/77	11/15/78
	704	Petitions for Variances	10/13/77	11/15/78
	707	Answers	01/10/75	06/14/78
	708	Dismissal of Petition	10/13/77	11/15/78
	709	Place of Hearing	10/13/77	11/15/78
	710	Notice of Hearing	10/13/77	11/15/78
	711	Evidence	01/10/75	06/14/78
	712	Preliminary Matters	01/10/75	06/14/78
	713	Official Notice	01/10/75	06/14/78
	714	Continuances	01/10/75	06/14/78
	715	Decision	10/13/77	11/15/78
	716	Effective Date of Decision	01/10/75	06/14/78
Placer County APCD (Lake Tahoe Air Basin)				
VI—Fees	40	Hearing Board Fees	02/21/72	05/31/72
	42	Technical Reports	02/21/72	05/31/72
	603	Analysis Fees	10/13/77	11/15/78
	604	Renewal Fees	10/13/77	11/15/78
	605	Exemption to Rule 604	10/13/77	11/15/78
V—Procedure Before the Hearing Board.	701	General	01/10/75	06/14/78
	702	Filing Petitions	10/13/77	11/15/78
	703	Contents of Petitions	10/13/77	11/15/78
	704	Petitions for Variances	10/13/77	11/15/78
	705	Appeal for Denial	01/10/75	06/14/78
	706	Failure to Comply with Rules	10/13/77	11/15/78
	707	Answers	01/10/75	06/14/78
	708	Dismissal of Petition	10/13/77	11/15/78
	709	Place of Hearing	10/13/77	11/15/78
	710	Notice of Hearing	10/13/77	11/15/78
	711	Evidence	01/10/75	06/14/78
	712	Preliminary Matters	01/10/75	06/14/78
	713	Official Notice	01/10/75	06/14/78
	714	Continuances	01/10/75	06/14/78
	715	Decision	10/13/77	11/15/78
	716	Effective Date of Decision	01/10/75	06/14/78
Sacramento Metropolitan AQMD				
	70	Permit Fees—Stationary Source	11/08/82	06/01/83
	71	Hearing Board Fees	05/23/79	01/26/82
	74	Agricultural Burning	09/05/80	06/18/82
	601	Procedure Before the Hearing Board	04/14/84	12/05/84
	602	Breakdown Conditions; Emergency Variances	04/14/84	12/05/84
San Diego County APCD				
III—Fees	40	Permit Fees	07/19/83	02/01/84
	41	Annual Permit Renewal Fees	07/25/73	05/11/77
	42	Hearing Board Fees	10/23/81	07/06/82
	44	Technical Reports—Charges for	06/30/72	09/22/72
V—Procedure Before the Hearing Board.	75	General	07/13/78	07/30/79
	76	Request for Hearing	10/13/77	08/31/78
	77	Contents of Petitions	06/30/72	09/22/72
	78	Petitions for Variances	06/30/72	09/22/72

STATE OF CALIFORNIA—Continued

Regulation	Rule No.	Rule name	Submit date	Approval date
	79	Appeal from Denial	06/30/72	09/22/72
	80	Failure to comply with Rules	06/30/72	09/22/72
	82	Answers	06/30/72	09/22/72
	83	Dismissal of Petition	06/30/72	09/22/72
	84	Place of Hearing	06/30/72	09/22/72
	85	Notice of Hearing	10/13/77	08/31/78
	86	Evidence	06/30/72	09/22/72
	87	Preliminary Matters	06/30/72	09/22/72
	88	Official Notice	06/30/72	09/22/72
	89	Continuances	06/30/72	09/22/72
	90	Decision	06/30/72	09/22/72
	91	Effective Date of Decision	06/30/72	09/22/72
	95	Requirement for Hearing	05/23/79	09/28/81
	96	Compliance Schedules	10/13/77	08/31/78
	97	Emergency Variance	07/13/78	07/30/79
	98	Breakdown Conditions: Emergency Variance	05/23/79	09/28/81
San Joaquin County APCD				
III—Fees	301	Authority to Construct Fee	05/23/79	12/09/81
	302	Analysis Fee	05/23/79	06/18/82
	303	Permit Fee	05/23/79	12/09/81
	304	Permit Fee Schedules	05/23/79	12/09/81
	305	Hearing Board Fees	05/23/79	12/09/81
	306	Emission Source Testing and Evaluation Fees	05/23/79	12/09/81
	307	Technical Reports-Charges for	05/23/79	12/09/81
	308	Rules and Regulations-Charges for	05/23/79	12/09/81
	309	Copies-Charges for	05/23/79	12/09/81
	310	Professional Consultation Fee	05/23/79	12/09/81
	311	Special Burn Permit Fee	05/23/79	12/09/81
V—Procedure Before the Hearing Board.	501	Appl. Articles of the Health & Safety Code	11/10/76	10/04/77
	502	General	06/30/72	09/22/72
	503	Filing Petitions	11/10/76	10/04/77
	504	Contents of Petitions	10/23/74	08/22/77
	505	Petitions for Variances	10/23/74	08/22/77
	506	Appeal for Denial	06/30/72	09/22/72
	507	Failure to Comply with Rules 06/30/72 09/22/72.		
	508	Answers	06/30/72	09/22/72
	509	Dismissal of Petition	06/30/72	09/22/72
	510	Place of Hearing	10/23/74	08/22/77
	511	Notice of Hearing	05/23/79	12/09/81
	512	Evidence	10/23/74	08/22/77
	513	Compliance Schedule	10/23/74	08/22/77
	514	Preliminary Matters	10/23/74	08/22/77
	515	Official Notice	10/23/74	08/22/77
	516	Continuances	10/23/74	08/22/77
	517	Decision	10/23/74	08/22/77
	518	Effective Date of Decision	10/23/74	08/22/77
	520	Emergency Variance	10/23/74	08/22/77
	521	Breakdown Conditions: Emergency Variance	08/06/82	11/10/82
San Luis Obispo APCD				
III—Fees	301	Fees	10/23/81	06/18/82
	302	Schedule of Fees	02/03/83	11/18/83
	303	Hearing Board Fees	02/25/80	05/18/81
	304	Technical Reports-Charges for	02/25/80	05/18/81
V—Procedure Before the Hearing Board.	801	Hearing Board Fees	11/10/76	08/04/78
	802	Filing Petitions	11/10/76	08/04/78
	803	Contents of Petitions	11/10/76	08/04/78
	804	Petitions for Variances	11/10/76	08/04/78
	805	Appeal for Denial	11/10/76	08/04/78
	806	Failure to Comply with Rules	11/10/76	08/04/78
	807	Notice of Hearing	11/10/76	08/04/78
	808	Place of Hearing	11/10/76	08/04/78
	809	Pleading	11/10/76	08/04/78
	810	Dismissal of Petition	11/10/76	08/04/78
	811	Preliminary Matters	11/10/76	08/04/78

STATE OF CALIFORNIA—Continued

Regulation	Rule No.	Rule name	Submit date	Approval date
	812	Evidence	11/10/76	08/04/78
	813	Official Notice	11/10/76	08/04/78
	814	Continuances	11/10/76	08/04/78
	815	Decision	11/10/76	08/04/78
	816	Effective Date of Decision	11/10/76	08/04/78
	817	Increments of Progress	11/10/76	08/04/78
Santa Barbara County APCD				
II—Permits	210	Fees	05/23/79	05/18/81
	211	Technical Reports—Fees	05/23/79	05/18/81
V—Procedure Before the Hearing Board.	501	General	05/23/79	05/18/81
	502	Filing Petitions	05/23/79	05/18/81
	503	Contents of Petitions	05/23/79	05/18/81
	504	Petitions for Variances: Contents	05/23/79	05/18/81
	506	Emergency Variances for Breakdowns	05/23/79	05/18/81
	507	Appeal from Denial	05/23/79	05/18/81
	508	Failure to Comply with Rules	05/23/79	05/18/81
	509	Petition Response	05/23/79	05/18/81
	510	Withdrawal of Petition	05/23/79	05/18/81
	511	Place of Hearing	05/23/79	05/18/81
	512	Notice of Hearing	05/23/79	05/18/81
	514	Preliminary Matters	05/23/79	05/18/81
	515	Official Notice	05/23/79	05/18/81
	516	Continuances	05/23/79	05/18/81
	518	Effective Date of Decision	05/23/79	05/18/81
Shasta County APCD				
IV—Procedure Before the Hearing Board.	4.1	Appl. Sections of the Health & Safety Code	11/21/86	04/12/89
	4.2	General	07/19/74	08/22/77
	4.3	Filing Petitions	07/19/74	08/22/77
	4.4	Hearing Board Fees	05/20/82	08/22/77
	4.5	Contents of Petitions	10/13/77	11/14/78
	4.6	Petitions for Variances	10/13/77	11/14/78
	4.8	Contents of Notice of Appeal	07/19/74	08/22/77
	4.9	Failure to Comply with Rules	07/19/74	08/22/77
	4.10	Answers	07/19/74	08/22/77
	4.15	Rules of Evidence and Procedure	07/19/74	08/22/77
	4.23	Additional Rules	07/19/74	08/22/77
South Coast AQMD				
III—Fees	303	Hearing Board Fees	02/03/83	11/18/83
V—Procedure Before the Hearing Board.	501	Procedure Before the Hearing Board—General	02/10/76	06/14/78
	501.1	Assistance to Small Business	12/17/79	09/28/81
	502	Filing Petitions	07/19/83	02/01/84
	503	Contents of Petitions (Deletion)	06/22/78	03/28/79
	504	Petitions for Variances and Appeals	10/23/81	07/06/82
	504.1	Rules from which Variances are not Allowed	10/23/81	07/06/82
	505	Appeal from Denial (Deletion)	12/17/79	09/28/81
	506	Failure to Comply with Rules	02/10/76	06/14/78
	507	Pleading	02/10/76	06/14/78
	508	Dismissal of Petition	02/10/76	06/14/78
	509	Place of Hearing	02/10/76	06/14/78
	510	Notice of Hearing	02/10/76	06/14/78
	511	Evidence	02/10/76	06/14/78
	511.1	Subpoenas	02/10/76	06/14/78
	512.1	Prehearing Conference	02/10/76	06/14/78
	513	Administrative Notice	02/10/76	06/14/78
	514	Continuances	02/10/76	06/14/78
	515	Decision (Deletion)	02/10/76	06/14/78
	516	Findings and Decision	02/10/76	06/14/78
	517	Emergency Variance Procedures—Breakdowns	02/10/76	06/14/78
	518	Findings (Deletion)	02/10/76	06/14/78
VIII—Orders for Abatement	801	Order for Abatement—General	02/10/76	06/14/78

STATE OF CALIFORNIA—Continued

Regulation	Rule No.	Rule name	Submit date	Approval date
	802	Order for Abatement	08/02/76	06/14/78
	803	Filing Petitions	02/10/76	06/14/78
	804	Contents of Petitions	02/10/76	06/14/78
	805	Scope of Order	08/02/76	06/14/78
	806	Findings	08/02/76	06/14/78
	807	Pleading	02/10/76	06/14/78
	808	Evidence	02/10/76	06/14/78
	809	Failure to Comply with Rules	02/10/76	06/14/78
	810	Withdrawal of Petition	02/10/76	06/14/78
	811	Place of Hearing	02/10/76	06/14/78
	812	Notice of Hearing	02/10/76	06/14/78
	813	Preliminary Matters	08/02/76	06/14/78
	814	Official Notice	02/10/76	06/14/78
	815	Continuance	02/10/76	06/14/78
	816	Order and Decision	08/02/76	06/14/78
	817	Effective Date of Decision	02/10/76	06/14/78
Stanislaus County APCD				
III—Fees	301	Permit fees	03/28/81	06/18/82
	302	Permit Fee Schedules	11/08/82	06/01/83
	303	Analysis Fees	06/30/72	09/22/72
	304	Technical Report-Charges for	06/30/72	09/22/72
	305	Hearing Board Fees	07/25/80	12/09/81
V—Procedure Before the Hearing Board.	501	Appl. Articles of the Health & Safety Code	08/02/76	08/22/77
	502	General	06/30/72	09/22/72
	503	Filing Petitions	08/06/82	11/10/82
	504	Contents of Petitions	08/02/76	08/22/77
	505	Petitions for Variances	06/30/72	09/22/77
	506	Appeal for Denial	06/30/72	09/22/72
	507	Failure to Comply with Rules	06/30/72	09/22/72
	508	Answers	06/30/72	09/22/72
	509	Dismissal of Petition	06/30/72	09/22/72
	510	Place of Hearing	06/30/72	09/22/72
	511	Notice of Hearing	08/02/76	08/22/77
	512	Evidence	06/30/72	09/22/72
	513	Preliminary Matters	06/30/72	09/22/72
	514	Official Notice	06/30/72	09/22/72
	515	Continuances	06/30/72	09/22/72
	516	Decision	06/30/72	09/22/72
	517	Effective Date of Decision	06/30/72	09/22/72
	519	Emergency Variance	05/23/79	06/18/82
Sutter County APCD				
V—Hearing Board & Procedures.	5.0	General	01/28/81	04/12/82
	5.1	Hearing Board	01/28/81	04/12/82
	5.2	Procedures	01/28/81	04/12/82
	5.3	Hearings	01/28/81	04/12/82
	5.4	Contents of Petitions for Hearings	01/28/81	04/12/82
	5.5	Request for Variances	01/28/81	04/12/82
	5.6	Appeal from Denial	01/28/81	04/12/82
	5.7	Failure to Comply with Rules	01/28/81	04/12/82
	5.8	Answers	01/28/81	04/12/82
	5.9	Dismissal of Request for Hearing	01/28/81	04/12/82
	5.10	Place of Hearing	01/28/81	04/12/82
	5.11	Notice of Hearing	01/28/81	04/12/82
	5.12	Evidence	01/28/81	04/12/82
	5.13	Preliminary Matters	01/28/81	04/12/82
	5.14	Official Notice	01/28/81	04/12/82
	5.15	Continuances	01/28/81	04/12/82
	5.16	Decision	01/28/81	04/12/82
	5.17	Effective Date of Decision	01/28/81	04/12/82
	5.19	Record of Hearing	01/28/81	04/12/82
VI—Variances	6.0	Variance Applicability	01/28/81	04/12/82
	6.1	Interim Variances	01/28/81	04/12/82
	6.2	Limitation on Granting Variance	01/28/81	04/12/82
	6.3	Board's Auth. to Impose Req. on Variances	01/28/81	04/12/82

STATE OF CALIFORNIA—Continued

Regulation	Rule No.	Rule name	Submit date	Approval date
	6.4	Cash Bond	01/28/81	04/12/82
	6.5	Modifying or Revoking Variances	01/28/81	04/12/82
	6.6	Variance Time Period	01/28/81	04/12/82
	6.7	Variance Action	01/28/81	04/12/82
VII—Fees	7.0	Hearing Board Fee	01/28/81	04/12/82
	7.1	Analysis Fee	01/28/81	04/12/82
	7.2	Technical Report Fee	01/28/81	04/12/82
Tehama County APCD				
Reg V—Procedure Before the Hearing Board.	5.1	Appl. Articles of the Health & Safety Code	02/21/72	05/31/72
	5.2	General	02/10/86	02/03/87
	5.3	Filing Petitions	02/10/86	02/03/87
	5.6	Contents of Petitions	02/10/86	02/03/87
	5.7	Petitions for Variance	02/10/86	02/03/87
	5.8	Petition for Abatement Order	02/10/86	02/03/87
	5.9	Failure to Comply with Rules Service of Notices	02/10/86	02/03/87
	5.11	Answers	02/10/86	02/03/87
	5.12	Withdrawal of Petitions	02/10/86	02/03/87
	5.13	Place of Hearing	02/10/86	02/03/87
	5.15	Rules of Evidence & Procedures	02/10/86	02/03/87
	5.16	Preliminary Matters	02/10/86	02/03/87
	5.17	Official Notice	02/10/86	02/03/87
	5.18	Continuances	02/10/86	02/03/87
	5.20	Effective Date of Decision	02/10/86	02/03/87
	5.21	Issuance of Subpoenas: Subpoenas Duces Tecum	02/10/86	02/03/87
	5.22	Confidential Information	02/10/86	02/03/87
	5.23	Additional Rule Implementation plans Agricultural Burning	02/10/86	02/03/87
Tulare County APCD				
I—General Provisions	105	Order for Abatement	11/10/76	09/21/77
III—Fees	301	Permit Fee	10/15/79	12/09/81
	302	Permit Fee Schedules	10/15/79	12/09/81
	303	Analysis Fees	06/30/72	09/22/72
	304	Technical Reports—Charges For	06/30/72	09/22/72
	305	Hearing Board Fees	11/10/76	09/21/77
V—Procedure Before the Hearing Board.	501	Applicable Articles of the Health	06/30/72	09/22/72
	502	General	06/30/72	09/22/72
	503	Filing Petitions	10/23/74	08/22/77
	504	Contents of Petitions	10/23/74	08/22/77
	505	Petitions for Variances	10/23/74	08/22/77
	506	Appeal for Denial	06/30/72	09/22/72
	507	Failure to Comply with Rules	06/30/72	09/22/72
	508	Answers	06/30/72	09/22/72
	509	Dismissal of Petition	06/30/72	09/22/72
	510	Place of Hearing	06/30/72	09/22/72
	511	Notice of Hearing	06/30/72	09/22/72
	512	Evidence	06/30/72	09/22/72
	513	Preliminary Matters	06/30/72	09/22/72
	514	Official Notice	06/30/72	09/22/72
	515	Continuances	10/23/74	08/22/77
	516	Decision	06/30/72	09/22/72
	517	Effective Date of Decision	06/30/72	09/22/72
	518	Lack of Permit	06/30/72	09/22/72
	519	Emergency Variance	10/23/74	08/22/77
Tuolumne County APCD				
V—Permit to Operate Part D.	516	Emergency Variance Procedures	10/23/81	05/27/82
VI—Fees	601	Permit Fee	02/10/77	12/06/79
	602	Permit Fee Schedules	02/10/77	12/06/79
	603	Analysis Fee	02/10/77	12/06/79
	604	Technical Reports	02/10/77	12/06/79
	605	Hearing Board Fees	02/10/77	12/06/79
VII—Procedure Before the Hearing Board.	700	Applicable Articles of the Health	02/10/77	12/06/79

STATE OF CALIFORNIA—Continued

Regulation	Rule No.	Rule name	Submit date	Approval date
	701	General	02/10/77	12/06/79
	702	Filing Petitions	02/10/77	12/06/79
	703	Contents of Petitions	02/10/77	12/06/79
	704	Petitions for Variances	10/23/81	05/27/82
	705	Appeal for Denial	02/10/77	12/06/79
	706	Failure to Comply with Rules	02/10/77	12/06/79
	707	Answers	02/10/77	12/06/79
	708	Dismissal of Petition	02/10/77	12/06/79
	709	Place of Hearing	02/10/77	12/06/79
	710	Notice of Hearing	02/10/77	12/06/79
	711	Evidence	02/10/77	12/06/79
	712	Preliminary Matters	02/10/77	12/06/79
	713	Official Notice	02/10/77	12/06/79
	714	Continuances	02/10/77	12/06/79
	715	Decision	02/10/77	12/06/79
	716	Effective Date of Decision	02/10/77	12/06/79
		Ventura County APCD		
III—Fees	40	Fees-General	05/23/79	06/18/82
	41	Hearing Board Fees	07/19/83	02/01/84
	42	Permit Fees	10/23/81	06/18/82
	43	Technical Reports—Charges for	04/21/76	08/15/77
VII—Procedure Before the Hearing Board.	110	General	05/23/79	06/18/82
	111	Filing Petitions	05/23/79	06/18/82
	112	Contents of Petitions	05/23/79	06/18/82
	113	Petitions for Variances	05/23/79	06/18/82
	114	Appeal from Denial, Suspension, Conditional Approval	05/23/79	06/18/82
	115	Petitions for Abatement Orders or Revocation of Permits	11/10/76	08/15/77
	116	Failure to Comply with Rules	11/10/76	08/15/77
	117	Answers	11/10/76	08/15/77
	118	Dismissal of Petition	11/10/76	08/15/77
	119	Place of Hearing	11/10/76	08/15/77
	120	Notice of Hearing	05/23/79	06/18/82
	121	Evidence	05/23/79	06/18/82
	122	Official Notice	11/10/76	08/15/77
	123	Findings,Variance or Abatement Order	05/23/79	06/18/82
	124	Decision	05/23/79	06/18/82
	125	Abatement Order	05/23/79	06/18/82
	126	Effective Date of Decision	05/23/79	06/18/82
	128	Compensation-Hearing Board Members	11/10/76	08/15/77
	129	Burden of Proof	11/10/76	08/15/77
	130	Variance Order Conditions	05/23/79	06/18/82
		Yolo-Solano County APCD		
IV—Fees.				
	4.1	Authority to Construct Fees	05/20/82	11/10/82
	4.2	Permit to Operate Fees	05/20/82	11/10/82
	4.3	Hearing Board Fees	10/15/79	01/26/82
	4.4	Analysis Fees	07/25/73	06/14/78
	4.5	Technical Reports-Charges	07/25/73	06/14/78
V—Procedure Before the Hearing Board.				
	5.1	Appl. Articles of the Health & Safety Code	06/22/78	01/29/79
	5.2	General	07/25/73	06/14/78
	5.3	Filing Petitions	07/25/73	06/14/78
	5.4	Contents of Petitions	02/25/80	01/26/82
	5.5	Petitions for Variances	07/25/73	06/14/78
	5.6	Appeal of Denial	07/19/74	06/14/78
	5.7	Failure to Comply with Rules	07/25/73	06/14/78
	5.8	Answers	07/25/73	06/14/78
	5.9	Dismissal of Petition	07/25/73	06/14/78
	5.10	Place of Hearing	06/22/78	01/29/78
	5.11	Notice of Hearing	06/22/78	01/29/79
	5.12	Evidence	07/19/74	06/14/78
	5.13	Preliminary Matters	07/25/73	06/14/78
	5.14	Official Notice	07/25/73	06/14/78
	5.15	Continuances	07/25/73	06/14/78

STATE OF CALIFORNIA—Continued

Regulation	Rule No.	Rule name	Submit date	Approval date
	5.16	Decision	07/25/73	06/14/78
	5.17	Effective Date of Decision	07/25/73	06/14/78

STATE OF HAWAII

Regulation	Rule No.	Rule name	Submit date	Approval date
Specific Variances	11–60–36	Variances	12/20/82	08/18/83
Ch. 43, Sec. 7		Variances	01/28/72	05/31/72
		Variances	09/12/78	04/23/79
Ch. 43, Sec. 7		A Variance of the Hawaii Public Health Regs	04/06/82	09/30/82

AMERICAN SAMOA

Regulation	Rule No.	Rule name	Submit date	Approval date
Ch. 35.01		Environmental Quality Act.		

STATE OF NEVADA

Regulation	Rule No.	Rule name	Submit date	Approval date
Nevada Department of Conservation and Natural Resources				
State Regs	2.8	Administrative Fines	01/28/72	05/31/72
	2.11	Variances	01/28/72	05/31/72
Statutes	445.506	Variances: Conditions, Criteria for Granting Variance	12/29/78	07/10/80
	445.511	Renewal, Protest & Hearing on Application	12/29/78	07/10/80
	445.516	Limitations on Duration; Annual Review	12/29/78	07/10/80
	445.521	Granting, Renewal of Variance Discretionary	12/29/78	07/10/80
Clark County				
VII—Hearing Board	7.1–7.13	Hearing Board	11/17/81	06/18/82
	7.14	Request for Variances	11/17/81	06/18/82
	7.15	Renewals of Variances	11/17/81	06/18/82
	7.16	Duration of Variance	11/17/81	06/18/82
	7.17–7.19	Hearing Board	11/17/81	06/18/82
IX—Admin	9.1	Administrative Fines	11/17/81	06/18/82
Fines	9.2–9.3	Administrative Fines	07/24/79	08/27/81

[FR Doc. 96–18834 Filed 7–24–96; 8:45 am]
BILLING CODE 6560–50–P

40 CFR Part 52

[CA 057–0009b; FRL–5527–7]

Approval and Promulgation of State Implementation Plans; California State Implementation Plan Revision, Kern County Air Pollution Control District, Placer County Air Pollution Control District, Ventura County Air Pollution Control District, and San Joaquin Unified Air Pollution Control District

AGENCY: Environmental Protection Agency (EPA).

ACTION: Proposed rule.

SUMMARY: EPA is proposing to approve revisions to the California State Implementation Plan (SIP) which concern the control of volatile organic compound (VOC) emissions from metal parts and products coating, semiconductor manufacturing, petroleum refineries and chemical plants, polyester resin material operations and decontamination of soil.

The intended effect of proposing approval of these rules is to regulate emissions of VOCs in accordance with the requirements of the Clean Air Act, as amended in 1990 (CAA or the Act). In the Final Rules Section of this Federal Register, the EPA is approving the state's SIP revision as a direct final rule without prior proposal because the Agency views this as a noncontroversial revision amendment and anticipates no adverse comments. A detailed rationale for this approval is set forth in the direct final rule. If no adverse comments are received in response to this proposed rule, no further activity is contemplated in relation to this rule. If EPA receives adverse comments, the direct final rule will be withdrawn and all public comments received will be addressed in a subsequent final rule based on this proposed rule. The EPA will not institute a second comment period on this document. Any parties interested in commenting on this action should do so at this time.

DATES: Comments on this proposed rule must be received in writing by August 26, 1996.

ADDRESSES: Written comments on this action should be addressed to: Daniel A. Meer, Rulemaking Section (A–5–3), Air and Toxics Division, U.S.

Environmental Protection Agency, Region 9, 75 Hawthorne Street, San Francisco, CA 94105–3901.

Copies of the rule revisions and EPA's evaluation report of each rule are available for public inspection at EPA's Region 9 office during normal business hours. Copies of the submitted rule revisions are also available for inspection at the following locations:

California Air Resources Board, Stationary Source Divison, Rule Evaluation Section, 2020 ''L'' Street, Sacramento, CA 95812

Kern County Air Pollution Control District, 2700 ''M'' Street, Suite 290, Bakersfield, CA 93301

Placer County Air Pollution Control District, 11464 B Avenue, Auburn, CA 95603

Ventura County Air Pollution Control District, 669 County Square Drive, Ventura, CA 93003

San Joaquin Unified Air Pollution Control District, 1999 Tuolumne Street, Suite 200, Fresno, CA 93721.

FOR FURTHER INFORMATION CONTACT: Daniel A. Meer, Chief, Rulemaking Section (A–5–3), Air and Toxics Division, U.S. Environmental Protection Agency, Region 9, 75 Hawthorne Street, San Francisco, CA 94105–3901, Telephone: (415) 744–1185.

SUPPLEMENTARY INFORMATION: This document concerns the following rules submitted to EPA by the California Air Resources Board on the dates noted. Kern County Air Pollution Control District's Rule 410.4, Surface Coating of Metal Parts and Products, submitted on May 25, 1995; Placer County Air Pollution Control District's Rule 244, Semiconductor Manufacturing Operations, submitted on May 24, 1995; Ventura County Air Pollution Control District's Rules 74.7, Fugitive Emissions of Reactive Organic Compounds (ROC) at Petroleum Refineries and Chemical Plants, submitted on March 26, 1996, and 74.14, Polyester Resin Material Operations, submitted on September 14, 1992; and San Joaquin Valley Unified Air Pollution Control District's Rule 4651, Volatile Organic Compound Emissions from Decontamination of Soil, submitted on December 22, 1994. For further information, please see the information provided in the Direct Final action which is located in the Rules Section of this Federal Register.

Authority: 42 U.S.C. 7401–7671q.

Dated: June 17, 1996.

Felicia Marcus,

Regional Administrator.

[FR Doc. 96–18936 Filed 7–24–96; 8:45 am]

BILLING CODE 6560–50–W

---

40 CFR Part 52

[IL114–1–6788b; FRL–5540–9]

Illinois; Air Quality Implementation Plans

AGENCY: Environmental Protection Agency (EPA).

ACTION: Proposed rule.

SUMMARY: The EPA proposes to approve the State Implementation Plan (SIP) revision request submitted by the State of Illinois on May 5, 1995, and May 31, 1995, which establishes regulations for motor vehicle refinishing operations in the Chicago and Metro-East ozone nonattainment areas. In the final rules section of this Federal Register, the EPA is approving this action as a direct final rule without prior proposal because EPA views this as a noncontroversial action and anticipates no adverse comments. A detailed rationale for the approval is set forth in the direct final rule. If no adverse comments are received in response to that direct final rule, no further activity is contemplated in relation to this proposed rule. If EPA receives adverse comments, the direct final rule will be withdrawn and all public comments received will be addressed in a subsequent final rule based on the proposed rule. Any parties interested in commenting on this document should do so at this time.

DATES: Comments on this proposed rule must be received on or before August 26, 1996.

ADDRESSES: Written comments should be mailed to: J. Elmer Bortzer, Chief, Regulation Development Section, Air Programs Branch (AR18–J), Environmental Protection Agency, Region 5, 77 West Jackson Boulevard, Chicago, Illinois 60604.

Copies of the State submittal are available for inspection at: Regulation Development Section, Air Programs Branch (AR18–J), Environmental Protection Agency, Region 5, 77 West Jackson Boulevard, Chicago, Illinois 60604.

FOR FURTHER INFORMATION CONTACT: Mark J. Palermo, Regulation Development Section, Air Programs Branch (AR–18J), Environmental Protection Agency, Region 5, 77 West Jackson Boulevard, Chicago, Illinois 60604, (312) 886–6082.

SUPPLEMENTARY INFORMATION: For additional information see the direct final rule published in the rules section of this Federal Register.

Dated: July 3, 1996.

Valdas V. Adamkus,

Regional Administrator.

[FR Doc. 96–18648 Filed 7–24–96; 8:45 am]

BILLING CODE 6560–50–P

---

40 CFR Part 52

[WA47–7120b; FRL–5538–4]

Clean Air Act Approval and Promulgation of Carbon Monoxide Implementation Plan for the State of Washington: Puget Sound Attainment Demonstration

AGENCY: Environmental Protection Agency (EPA).

ACTION: Proposed rule.

SUMMARY: EPA proposes to approve the attainment demonstration portion of the State Implementation Plan (SIP) revision submitted by the State of Washington Department of Ecology, as part of its Puget Sound nonattainment area carbon monoxide (CO) attainment plan.

In the Final Rules section of this Federal Register, EPA is approving the attainment demonstration portion of the Puget Sound area CO SIP revision as a direct final rule. A detailed rationale for the action is set forth in the direct final rule. If no adverse comments are received in response to that direct final rule, no further activity is contemplated in relation to this proposed rule. If EPA receives adverse comments, the direct final rule will be withdrawn and all public comments received will be addressed in a subsequent final rule based on this proposed rule. EPA will not institute a second comment period on this document. Any parties

interested in commenting on this document should do so at this time.

DATES: Comments must be submitted by August 26, 1996.

ADDRESSES: Written comments should be addressed to: Montel Livingston, SIP Manager, Office of Air Quality (OAQ–107), EPA, 1200 Sixth Avenue, Seattle, Washington 98101. Documents which are incorporated by reference are available for public inspection at the Air and Radiation Docket and Information Center, Environmental Protection Agency, 401 M Street SW, Washington, D.C. 20460. Copies of material submitted to EPA may be examined during normal business hours at the following locations: EPA Region 10, Office of Air Quality, 1200 Sixth Avenue (OAQ–107), Seattle, Washington 98101; Washington Department of Ecology, Attention Tami Dahlgren, Olympia, Washington 98504–7600, telephone (360)407–6830; and the Puget Sound Air Pollution Control Authority, 110 Union Street, Suite 500, Seattle, Washington 98101–2038.

FOR FURTHER INFORMATION CONTACT: William M. Hedgebeth, EPA Region 10, Office of Air Quality, 1200 Sixth Avenue, M/S OAQ–107, Seattle, Washington 98101, (206) 553–7369.

SUPPLEMENTARY INFORMATION: See the information provided in the Direct Final action which is located in the Rules Section of this Federal Register.

Dated: July 2, 1996.

Chuck Clarke,

Regional Administrator.

[FR Doc. 96–18650 Filed 7–24–96; 8:45 am]

BILLING CODE 6560–50–P

---

40 CFR Parts 148, 261, 268, 271

[FRL–5542–2]

RIN 2050–AD38

Land Disposal Program Flexibility Act of 1996—Surface Impoundment Study

AGENCY: Environmental Protection Agency.

ACTION: Request for comments.

SUMMARY: On March 26, 1996, the President signed the Land Disposal Program Flexibility Act of 1996. This statute overrules certain parts of the D.C. Circuit's opinion in *Chemical Waste Management* v. *EPA*, 976 F. 2d 2 (D.C. Cir. 1992), cert. denied 113 S.Ct. 1961 (1993) which relate to managing so-called decharacterized wastes—characteristic hazardous waste whose characteristic has been removed before land disposal—in centralized wastewater management systems regulated under the Clean Water Act (CWA) or the Safe Drinking Water Act (SDWA).

The subject of this Federal Register document is a related provision in the statute which requires that not later than five years after the date of enactment, EPA shall complete a study of potential risks to human health or the environment posed by managing these decharacterized hazardous wastes in either a) surface impoundments which are part of wastewater treatment systems whose ultimate discharge is regulated under the CWA, or b) Class I non-hazardous injection wells regulated under the SDWA.

EPA is seeking to develop more information in order to prepare the portion of the study dealing with surface impoundments. This Federal Register document has been prepared for industry representatives and environmental groups to clearly define the Agency's expectations in requesting draft methodologies that outline the conceptual design of the study, including how best to collect data, data quality assurance/quality control (QA/QC), risk assessment, and peer review. Concurrently, the Agency will develop a methodology to ensure that requirements of the legislation are satisfied and the conceptual design of the study is balanced with those of the commenters. Upon receipt of draft methodologies from commenters, the Agency will convene a workgroup to select an overall, scientifically defensible approach to address the requirements of the legislation. The selected methodology will then be subject to a peer review process conducted by a peer review panel set up by the Agency to provide oversight and QA/QC of the study.

DATES: Draft methodologies are requested by September 23, 1996.

ADDRESSES: To submit draft methodologies, the public must send an original and two copies to Docket Number F–96–PMWA–FFFFF, located at the RCRA Docket. The mailing address is: RCRA Information Center, U.S. Environmental Protection Agency (5305G), 401 M Street, SW., Washington, DC 20460. The RCRA Information Center is located at 1235 Jefferson Davis Highway, First Floor, Arlington, Virginia. The RCRA Information Center is open for public inspection and copying of supporting information for RCRA rules from 9:00 a.m. to 4 p.m., Monday through Friday, excluding Federal holidays. The public must make an appointment to review docket materials by calling (703) 603–9230. The public may copy a maximum of 100 pages from any regulatory document at no cost. Additional copies cost $0.15 per page.

FOR FURTHER INFORMATION CONTACT: For general information or to order paper copies of this Federal Register document, call the RCRA Hotline. Callers within the Washington Metropolitan Area must dial (703) 412–9810 or TDD (703) 412–3323 (hearing impaired). Long-distance callers may call 1–800–424–9346 or TDD 1–800–553–7672. The RCRA Hotline is open Monday through Friday from 9:00 a.m. to 6:00 p.m., Eastern Standard Time. For other information on this notice, contact Linda Martin (5307W), Office of Solid Waste, 401 M Street, SW., Washington, D.C. 20460, phone (703) 308–0499.

SUPPLEMENTARY INFORMATION:

Paperless Office Effort

EPA is asking prospective commenters to voluntarily submit one additional copy of their comments on labeled personal computer diskettes in ASCII (TEXT) format or a word processing format that can be converted to ASCII (TEXT). It is essential to specify on the disk label the word processing software and version/edition as well as the commenter's name. This will allow EPA to convert the comments into one of the word processing formats utilized by the Agency. Please use mailing envelopes designed to physically protect the submitted diskettes. EPA emphasizes that submission of comments on diskettes is not mandatory, nor will it result in any advantage or disadvantage to any commenter. This expedited procedure is in conjunction with the Agency ''Paperless Office'' campaign. For further information on the submission of diskettes, contact Linda Martin of the Economics, Methods, and Risk Assessment Division at (703) 308–0499. This Federal Register Notice is available on the Internet System through EPA Public Access Server at gopher.epa.gov or through WWW.epa.gov. For the text of the notice, choose: Rules, Regulations, and Legislation; the FR-Waste; finally, Year/Month/Day.

Request for Comments

On March 26, 1996, President Clinton signed into law the Land Disposal Program Flexibility Act of 1996. This legislation amends section 3004(g) of RCRA to overrule portions of the District of Columbia Circuit Court of Appeals' 1992 decision (*Chemical Waste Management* v. *EPA*, 976 F. 2d 2) dealing with the requirement to treat wastes that as generated exhibit a characteristic of hazardous waste, but

are diluted to remove that characteristic and are then placed in land disposal units—either surface impoundments that are part of Clean Water Act wastewater treatment systems or Class I injection wells. The legislation, by and large, states that treatment of such wastes is not required before placing them in these land disposal units. See generally, 61 FR 15660 (April 8, 1996) codifying portions of this legislation.

The statute further requires EPA to conduct a study characterizing risks to human health or the environment associated with management of decharacterized wastes in impoundments which are part of Clean Water Act treatment systems, or in Class I injection wells. EPA is also authorized to develop additional standards for such units as may be necessary to protect human health and the environment, and such standards could be based on the results of the study. (RCRA section 3004(g)(10)). This notice concerns the part of the study dealing with surface impoundments.

In conducting the Surface Impoundment Study (hereafter referred to as ''the study''), the Agency hopes to arrange and maintain a cooperative effort with all interested parties as EPA moves forward to develop a scientifically defensible work plan for conducting the study. Input into the data collection and development of the study design, as well as information regarding current management practices will prove invaluable in developing such a work plan.

Currently, the Agency is developing a draft methodology to assess potential risks posed by management of decharacterized wastes in surface impoundments. Key steps being taken to develop a draft methodology include identifying issues related to conducting the study, conducting meetings with interested parties, establishing a methodology for conducting the study, and establishing a peer-review structure for the study. The objective of the approach is to address Congress' concerns by assessing potential risks posed by management of decharacterized wastes in surface impoundments, assessing the degree to which existing State/Federal/Tribal programs effectively mitigate those risks, and finally determining which State/Federal/Tribal laws or programs are best equipped to manage the remaining risks, or whether independent controls may be needed.

To this end, EPA requests that interested industry, environmental and state groups provide input to the Agency into the development of the study such that Congress' concerns are addressed. Issues for which input is needed include data collection, quality assurance/quality control of data, development of risk assessment methods, establishment of a peer-review structure for the study, and assessment of current State/Federal/Tribal regulations or programs that address risks posed by decharacterized wastewaters managed in surface impoundments. Additionally, the Agency also requests input regarding regulations or programs that could be developed to address these risks.

Specifically, EPA requests that each interested group develop proposed methodologies and work plans for conducting the study of risks and existing regulations associated with surface impoundments receiving decharacterized wastes. Specific elements to be included in the methodology are outlined below. Following the methodology outline is EPA's preliminary schedule for completing the study, which is included in this document in order that commenters can better understand how and when EPA intends to proceed, and the role commenters can play. EPA will then evaluate proposed work plans submitted by commenters, in combination with its own work plan, by means of a peer review process.

Methodology Outline

Proposed methodologies should be organized according to the following format.

I. Conceptual Approach to the Study

The most critical element of the study is the completion of a high-quality, peer-reviewed risk assessment, since accurate identification of priorities for surface impoundment regulation and conclusions about the need for new regulations depend on the risk results. The development of an appropriate risk assessment methodology is therefore very important. The purpose of this section of the proposed methodology is to address key elements of the methodology and threshold questions, including but not limited to:

A. What should be the overall scope of the study?

B. What should be done to ensure credibility of the study?

C. What do you expect your group's role to be in conducting the study?

D. How heavily should we rely upon fate and transport modeling versus actual exposure monitoring?

E. Can the study be completed with available data?

F. How should additional data be collected?

G. Are there innovative mechanisms to conducting or designing the study using third parties (scientific organizations)?

II. Detailed Methodology

A. Sampling strategy:

i. Identification of the universe of facilities/ Study Population

ii. Description of the approach to sampling the universe of facilities/ Study Population (representativeness of the sample)

1. Random versus Judgmental
2. Stratification
3. Sample size

B. Risk Characterization [1]:

i. Data/Source Term Characterization

1. Facility
a. History
b. Location
c. Surrounding Land Uses
d. Meteorological Data
e. Subsurface Hydrogeology

2. Units
a. Point of Generation quantity of characteristic waste generated for each facility and/or industry; quantity of sludge generated (including sludge that is currently dredged from affected surface impoundments and sludge left in place in these units)
b. Surface Impoundments (including the use of surface impoundments or tanks to treat decharacterized wastewaters; types of surface impoundments used; size of surface impoundments; waste segregation and treatment practices at the unit, including the quantity of characteristic wastewaters that are segregated and the potential cost associated with segregating wastewaters)
c. Storm water Runoff (including the use of surface impoundments for Storm water runoff)

3. Hazardous Constituents in Decharacterized Wastewaters
a. Physical state
b. Toxicity information
c. Concentration

1. At the point of generation (prior to aggregation and/or decharacterization)
2. In surface impoundment based treatment systems (near the point at which they might be released to the environment)

[1] It should be noted that, from the advent of the D.C. Circuit's decision, EPA has repeatedly solicited data on the types, volumes, and concentrations of hazardous constituents, plus types and magnitudes of releases from surface impoundments managing decharacterized wastes. See, e.g., Supplemental Information to Notice of Data Availability (58 FR 4972, Jan. 19, 1993) at pp. 17, 18, 19; Phase 4 Proposed Rule (60 FR 43654, Aug. 22, 1995). To date, members of affected industry have provided virtually no hard information in response. EPA hopes that such information will be forthcoming as it develops the surface impoundment study.

3. In leachate from surface impoundments (including leachate release quantities and estimates of the relationship between constituent concentrations in surface impoundment wastewater and constituent concentration in leaks)

4. Estimates of the relationship between the concentration in surface impoundments and the subsequent releases to air at affected facilities (including concentrations of toxic constituents in ambient air around affected facilities)

5. Sludge constituent concentrations

ii. Fate and Transport

1. Estimation of future fate and transport

a. What models should be used to estimate fate and transport? What are the limitations of applying each model?

b. Pathways of concern

c. Handling complex environments; in subsurface, extreme meteorological events

2. Describe key elements of fate and transport parameter selection

a. Leachate flow volumes

b. An assessment of surrounding hydrogeologic conditions

c. Results from site specific fate and transport analyses that consider a site's hydrogeologic conditions

d. Distance from the surface impoundment or landfill to the nearest well and the numbers of persons using those wells

e. The exact location of the affected surface impoundment or facility (e.g., county, city, latitude and longitude)

C. Exposure:

i. Describe key elements of parameter selection

a. Distance to potential receptor populations

b. Size of potential receptor populations

ii. Describe the extent to which modeling should be used to estimate risks, including which models should be used to determine risk, and whether the exposure model should be linked with the selected fate and transport model.

iii. Describe the extent to which Monte Carlo analysis should be used to estimate risks

iv. Describe the extent to which the study should focus upon highly exposed sub-populations versus individuals

v. Describe whether the study should estimate High-End and/or Central Tendency risks

D. Data QA/QC and Peer Review:

i. Develop a QA Project Plan:

1. data quality objectives;

2. project objectives;

3. sample collection;

4. analysis and testing;

5. quality control;

6. project documentation;

7. organization performing field or laboratory operations (performance evaluation; internal assessment by QA function; external assessment; on-site evaluation (field activities, laboratory activities); QA reports).

ii. Describe how to establish a peer review process, including composition of the peer review panel.

Terms of Reference/ Evaluation Criteria

To stimulate thinking on this topic and establish criteria for evaluating methodologies, the Agency has established terms of reference for the risk assessment. Input Data Requirements—Data collected to support the risk assessment must be quality controlled, must be representative of the target universe and must be sufficiently detailed to support statistical modeling of uncertainty in risk outputs. Release Estimates—The risk assessment should consider all plausible forms of release from surface impoundments. Releases to be considered should include, but not be limited to: releases to groundwater and air from the unit, overland releases, and releases associated with the dredging, treatment, and disposal of sludges.

Fate and Transport Modeling—Fate and transport modeling should, to the extent possible, reflect the state of the art in groundwater and air dispersion modeling. At a minimum, the fate and transport modeling should incorporate speciation chemistry to non-toxic forms of chemical constituents where relevant, and, to facilitate review of the results, rely on non-proprietary models.

Exposure Assessment—Exposure assessment should consider both direct and indirect pathways. Constituent-specific estimates of exposure should reflect cumulative exposure across all relevant pathways. Pathways should be omitted only after careful consideration of whether they contribute significantly to total exposure.

Cancer and Non-Cancer Health Risk Assessment—The cancer and non-cancer health risk assessment methodology should reflect new Agency guidelines for conducting these types of studies.

Peer Review—The analysis must include provisions for peer review of proposed methodologies; intermediate results for input data, fate and transport, exposure assessment, and risk characterization; and, overall results. Elements of separate methodologies, including the Agency's own methodology may be combined to form an overall approach to assess risk. In this case, the overall approach would be subject to peer review.

III. Assessment of Existing State/ Federal/Tribal Programs:

A. Establish a methodology to conduct a systematic review of current and future planned regulations that might influence the management of decharacterized wastewaters at affected facilities. Include in the methodology a description of information collection activities and any limitations.

MAJOR MILESTONES AND PRELIMINARY COMPLETION DATE

Milestone	Completion date
1. Meetings with —Industry; and, —Environmental Groups.	Initiated in April 1996; On-going.
2. Publish FEDERAL REGISTER Notice Soliciting Proposed Methodologies from Commenters, with 60-day comment period.	July 1996.
3. EPA develops proposed methodology to conduct study	June–August 1996.
4. Receive proposed methodologies	August 1996.
5. Convene EPA workgroup from relevant offices to evaluate proposed methodologies and select one methodology for peer review.	October 1996.
6. Develop peer review panel for the selected methodology	December 1996–February 1997.
7. Finalize work plan and methodology	April 1997–May 1997.
8. Develop and implement survey and data collection, including: EPA-conducted sampling; pretesting; OMB approval of ICR; full implementation of survey for several hundred facilities; data compilation; and quality control checks.	April 1997–April 1999.
9. Assess coverage of existing regulations	September 1997–September 1998.

MAJOR MILESTONES AND PRELIMINARY COMPLETION DATE—Continued

Milestone	Completion date
10. Reassess risks of the wastewaters; interim Report to Congress on risk results	April 1997–December 1999.
11. Combine risk results with regulatory review results, develop report recommendations, write draft report.	January 2000–July 2000.
12. Conduct review and finalize report	August 2000–March 2001.

Dated: July 18, 1996.

Elliott P. Laws,

Assistant Administrator, Office of Solid Waste and Emergency Response.

[FR Doc. 96–18836 Filed 7–24–96; 8:45 am]

BILLING CODE 6560–50–P

FEDERAL COMMUNICATIONS COMMISSION

47 CFR Parts 20 and 52

[CC Docket No. 95–116; FCC 96–286]

Telephone Number Portability

AGENCY: Federal Communications Commission.

ACTION: Proposed Rule.

SUMMARY: On July 13, 1995, the Commission issued a Notice of Proposed Rulemaking (CC Docket No. 95–116) seeking comments on a wide variety of policy and technical issues related to number portability. On June 27, 1996, the Commission adopted a First Report and Order which is published elsewhere in this issue. On the same day, the Commission adopted a Further Notice of Proposed Rulemaking (Further Notice or FNPRM) seeking comment on the appropriate methods of cost recovery of long-term number portability. Since the Telecommunications Act of 1996 requires that the costs of number portability be borne by all telecommunications carriers on a competitively neutral basis, the Commission will determine the appropriate method of cost recovery in this proceeding.

DATES: Comments are due on or before August 16, 1996, and reply comments are due on or before September 16, 1996.

ADDRESSES: Comments and reply comments should be sent to Office of the Secretary, Federal Communications Commission, 1919 M Street, NW., Room 222, Washington, DC 20554, with a copy to Wanda Harris of the Competitive Pricing Division of the Common Carrier Bureau, 1919 M Street, NW., Room 518, Washington, DC 20554. Parties should also file one copy of any documents filed in this docket with the Commission's copy contractor, International Transcription Services, Inc., 2100 M Street, NW., Suite 140, Washington, DC 20037.

FOR FURTHER INFORMATION CONTACT: Neil Fried, Attorney, Common Carrier Bureau, Competitive Pricing Division, (202) 418–1530.

SUPPLEMENTARY INFORMATION: This is a summary of the Commission's Further Notice of Proposed Rulemaking June 27, 1996, and released July 2, 1996 (FCC 96–286). This FNPRM contains no proposed or modified information collections subject to the Paperwork Reduction Act of 1995 (PRA). The full text of this Further Notice of Proposed Rulemaking is available for inspection and copying during normal business hours in the FCC Reference Center (Room 239), 1919 M St., NW., Washington, DC. The complete text also may be obtained through the World Wide Web, at http://www.fcc.gov/Bureaus/Common Carrier/Orders/fcc96286.wp, or may be purchased from the Commission's copy contractor, International Transcription Service, Inc., (202) 857–3800, 2100 M St., NW., Suite 140, Washington, DC 20037.

Initial Regulatory Flexibility Analysis

Pursuant to section 603 of the Regulatory Flexibility Act, 5 U.S.C. 603, the Commission prepared an Initial Regulatory Flexibility Analysis (IRFA) of the expected impact on small entities of the policies and rules proposed in the Further Notice of Proposed Rulemaking. The IRFA is set forth in Appendix C of the FNPRM. The Commission, in compliance with sections 251(b)(2) and 251(d)(1) of the Act, proposes rules necessary to implement section 251(e)(2) of the Act, which requires that the costs of number portability be borne by all telecommunications carriers on a competitively neutral basis. The Commission's objective in issuing the FNPRM is to propose and seek comment on rules establishing a cost recovery mechanism for carriers to use in implementing a long-term number portability method pursuant to the Act and in accordance with the First Report and Order in this proceeding. Specifically, the Commission's goal is to propose rules which implement section 251(e)(2) of the Act, requiring that the cost of ''number portability be borne by all telecommunications carriers on a competitively neutral basis as determined by the Commission.'' 47 U.S.C. 251(e)(2). The legal basis for action as proposed in the FNPRM is contained in sections 1, 4(i), 4(j), 201–205, 218, 251(b), 251(e), and 332 of the Communications Act of 1934, as amended. 47 U.S.C. 151, 154(i), 154(j), 201–205, 218, 251(b), 251(d), 251(e), The Commission's proposed rules governing cost recovery for long-term number portability apply to all LECs, including incumbent LECs as well as new LEC entrants, and also apply to cellular, broadband PCS, and covered SMR providers. According to the SBA definition, incumbent LECs do not qualify as small businesses because they are dominant in their field of operation. However, the proposed rules may have a significant economic impact on a substantial number of small businesses insofar as they may apply to telecommunications carriers other than incumbent LECs. The proposed rules may have such an impact upon new entrant LECs as well as cellular, broadband PCS, and covered SMR providers. Based upon data contained in the most recent census and a report by the Commission's Common Carrier Bureau, the Commission estimates that 2,100 carriers could be affected. The Commission requests comment on this estimate. These entities could include various categories of carriers, including competitive access providers, cellular carriers, interexchange carriers, mobile service carriers, operator service providers, pay telephone operators, PCS providers, covered SMR providers, and resellers. The FNPRM requests comment on the appropriate method by which the costs of long-term number portability should be recovered. One possible cost recovery method would be based upon a percentage of a carrier's gross revenues. Such a rule, if promulgated, would not impose a reporting requirement on LECs because they already file information about gross revenues with the Commission for other purposes. There are no other reporting requirements contemplated by the FNPRM. There are no federal rules

which overlap, duplicate or conflict with these proposed rules.

Synopsis of Further Notice of Proposed Rulemaking

Further Notice of Proposed Rulemaking

I. Long-Term Number Portability—Costs and Cost Recovery

A. Background

1. In the *NPRM* (Telephone Number Portability, Notice of Proposed Rulemaking, 60 FR 39136 (August 1, 1995)), we requested comment on appropriate cost recovery mechanisms regarding long-term number portability. We also sought comment, data, studies, and other information on the costs associated with designing, building, and deploying long-term number portability. Section 251(e)(2) of the 1996 Act requires, *inter alia*, that the costs of number portability be borne by all telecommunications carriers on a competitively neutral basis.

B. Positions of the Parties

2. In response to the July *NPRM*, many parties assert that the costs of number portability cannot be estimated until the industry adopts a particular architecture. While the incumbent LECs generally urge the Commission to continue to gather information concerning the potential costs and impacts on existing networks from ongoing state activities, a few parties offer rough estimates regarding the costs of implementing long-term number portability. We note that many of these estimates assume a significant level of location portability.

3. The incumbent LECs generally assert that the costs of providing long-term number portability should be borne on a ''competitively neutral'' basis by those carriers that cause or benefit from number portability. They assert that specific cost recovery mechanisms cannot be established until a better understanding is developed regarding how number portability should be provided. Ameritech, however, proposes a cost recovery structure with three categories of costs: (1) Administrative and overhead costs for SMS/databases—to be recovered from all providers; (2) costs directly assignable to number portability deployment—to be recovered from all LECs, both incumbents and new entrants, in proportion to the amount of telephone numbers that each has transferred to its switches; and (3) costs incurred to increase the capacity of existing infrastructure—to be borne mostly by incumbent LECs. Some incumbent LECs also contend that the costs of deploying long-term number portability should be allocated between state and federal jurisdictions.

4. Most other parties generally contend that all telecommunications carriers and their customers should bear the costs of long-term number portability because they all benefit from the service and price competition stimulated by portability. Non-LEC parties generally contend that carrier-specific costs incurred in adapting existing systems to long-term number portability should be recovered, like other network upgrades such as AIN and SS7, through tariff and contract mechanisms. Sprint and AT&T advocate implementing portability on a region-by-region basis (with costs amortized over several years) to minimize incumbent carriers' greater burdens for upgrading existing networks. Several parties also contend that the external costs of long-term number portability, i.e., the costs of designing, deploying, and operating facilities common to all carriers, should be shared equitably among all affected carriers. Parties offer several different methods of allocating costs among the relevant carriers.

5. After passage of the 1996 Act, and in response to the March Public Notice, several parties addressed the meaning of the statutory language ''competitively neutral'' as set forth in section 251(e)(2). Ameritech asserts that this standard requires that all costs be allocated to all telecommunications carriers on a basis that is independent of who incurred the cost or who uses portability, and that gives no competitor an advantage. Ameritech criticizes proposals that would limit or exclude recovery of costs incurred by incumbent LECs or allocate costs based on lines. BellSouth urges the Commission to consider the types of infrastructure costs that all classes of carriers will bear in implementing number portability, not just incumbent LECs, in order to avoid imposing large financial burdens on any particular class of carriers, especially those not required to participate in portability. GTE and Pacific Bell argue that requiring each carrier to bear its own costs would result in incumbent LECs paying most of the implementation costs, which is not competitively neutral.

6. In contrast, ALTS, Omnipoint, and Cox maintain that competitive neutrality requires each carrier to bear its own costs, and that no carrier should be required to pay for upgrades to another carrier's network. Moreover, Cox argues that incumbent LEC proposals to require that the new entrants bear all number portability costs are not competitively neutral because it would unreasonably burden those carriers. In addition, Cox asserts that, because new entrants will begin providing service at different times, it would be difficult to allocate costs on a competitively neutral basis unless each carrier bears its own costs of implementation. Omnipoint asserts that requiring carriers to compensate other carriers with less efficient systems and networks is competitively unfair.

7. US West advocates permitting LECs to recover their costs using a per-line surcharge, claiming that all carriers are entitled to recover their implementation costs under the 1996 Act. GTE suggests establishment of a ''cost pool,'' under which each subscriber would be assessed an amount, regardless of which carrier it used. Bell Atlantic claims that allowing incumbent LECs to recover their costs only from their customers, and not from other providers, is not competitively neutral because costs would be recovered only from those end users who do not use or benefit from portability, and higher incumbent LEC rates would encourage their customers to switch providers. USTA cautions that not permitting carriers to recover their costs through separate charges for number portability will result in an across-the-board increase in local rates, which, for incumbent LECs, must be approved by state regulators.

8. In contrast, MFS maintains that the competitive neutrality requirement does not apply to end users at all, but rather requires an analysis of charges assessed to other, competing telecommunications carriers. Teleport argues that number portability costs should not be recovered from customers through a number portability surcharge, as such charges would deter customers from transferring their numbers. Cox asserts that GTE's pooling argument is not competitively neutral because it would create incentives for incumbents to inflate costs.

9. MFS argues that the competitive neutrality standard in the 1996 Act requires that only the shared/common costs be borne by all telecommunications carriers, and that such allocation should be done based on net revenues. It notes that all telecommunications users should not be interpreted to mean only a segment of the market, a single class of carriers, or a single class of customers. MFS further argues that the shared/common costs could be recovered from each carrier's customer base, but not from other carriers in the form of increased charges. TRA contends that section 251(e)(2) contemplates a competitively fair distribution of the common costs associated with number portability

among only those carriers engaged in the provision of local exchange/exchange access services, not a general levy on all telecommunications providers. Teleport and Time Warner Holdings propose similar cost recovery mechanisms to MFS, but argue that the shared costs should be allocated based on the number of lines served, rather than net revenues. ALTS argues that, in order to expedite the implementation of number portability, shared/common costs (e.g., costs associated with the number portability database(s)) should be recovered by a third party from all carriers on a per line basis, but notes that there is considerable economic logic in recovering such costs according to net revenues.

C. Discussion

10. We tentatively conclude that three types of costs are involved in providing long-term service provider portability: (1) Costs incurred by the industry as a whole, such as those incurred by the third-party administrator to build, operate, and maintain the databases needed to provide number portability; (2) carrier-specific costs directly related to providing number portability (*e.g.*, the costs to purchase the switch software implementing number portability); and (3) carrier-specific costs not directly related to number portability (*e.g.*, the costs of network upgrades necessary to implement a database method). We seek comment on this tentative conclusion and ask whether other types of costs are involved in the provision of long-term service provider number portability.

11. New section 251(e)(2) of the Communications Act requires that the costs of establishing ''number portability be borne by all telecommunications carriers on a competitively neutral basis as determined by the Commission.'' We tentatively conclude that the ''competitively neutral'' standard in section 251(e)(2) applies only to number portability costs, and not to cost recovery of carrier-specific, non-number portability-specific costs, such as upgrades to SS7 or AIN technologies. This interpretation is borne out by the plain language of the statute, which only requires that telecommunications carriers bear the costs of number portability. We also tentatively conclude that section 251(e)(2) does not address recovery of those costs from consumers, but only the allocation of such costs among carriers. We seek comment on these tentative conclusions. We also seek comment on the meaning of the statutory language ''all telecommunications carriers'' as that term is used in section 251(e)(2). We further seek comment on whether the Commission has authority to exclude certain groups of telecommunications carriers from the cost recovery mechanisms for number portability, and, if so, which carriers should be excluded.

12. In determining the cost recovery mechanism for currently available number portability measures, we set forth principles with which any competitively neutral cost recovery mechanism should comply. Specifically, we required that (1) a competitively neutral cost recovery mechanism should not give one service provider an appreciable, incremental cost advantage over another service provider, when competing for a specific subscriber; and (2) a competitively neutral cost recovery mechanism should not have a disparate effect on the ability of competing service providers to earn a normal return. As in the case of currently available number portability measures, we believe that these principles equally apply to the allocation of costs incurred due to the implementation of long-term number portability. We, therefore, tentatively conclude that any long-term cost recovery method should comply with these principles. We seek comment on this tentative conclusion.

13. Pursuant to the requirement of section 251(e)(2) that number portability costs be borne by all telecommunications carriers on a competitively neutral basis as determined by this Commission, we must establish pricing principles that are applied consistently to all carriers. Consequently, we tentatively conclude that the pricing for state-specific databases should be governed by the pricing principles established in this proceeding. We believe the use of our pricing mechanism—even in states that opt out of the regional database system—will help to maintain consistency between states, thereby improving the likelihood that competition will develop nationwide.

a. Costs of Facilities Shared by All Carriers for the Provision of Number Portability

14. The costs of facilities shared by all telecommunications carriers for providing long-term number portability include, for example, the costs of building and administering regional databases. We seek comment on whether the database administrator(s) selected through the NANC should recover the costs of facilities shared by all telecommunications carriers for the provision of long-term number portability through a charge assessed only on those carriers using the databases or on all carriers whether or not they use the databases. We note that if a regional database consists only of the SMS, usage would consist of uploading and downloading number portability routing information. However, to the extent a database architecture is chosen that utilizes an SMS/SCP pair, usage additionally may include carrier queries to the regional SCP for purposes of providing routing instructions to carriers for individual calls. We seek comment on whether such costs, if recovered from all carriers, should be recovered on a nationwide or regional basis, and how they should be recovered on such bases. To the extent such costs are recovered on a nationwide basis, and multiple entities are selected to administer the regional databases, we seek comment on whether either one of the neutral third-party administrators or a separate entity should be designated to allocate the aggregate costs among each telecommunications carrier and determine the method by which such payments should be made.

15. With regard to those carriers responsible for bearing the costs of the shared facilities, we tentatively conclude that the recovery of the costs associated with these databases should be allocated in proportion to each telecommunications carrier's total gross telecommunications revenues minus charges paid to other carriers. We believe that the use of gross telecommunications revenues to allocate costs best comports with our principles for competitively neutral cost recovery set forth above. As we indicated in our discussion of currently available number portability measures, such allocator would not give any provider an appreciable, incremental cost advantage over another service provider, nor have a disparate effect on the ability of competing service providers to earn a normal return. In addition, gross telecommunications revenues are the least distortionary, among practical applications, of allocating costs across telecommunications carriers. We also believe it is appropriate to subtract out charges paid to other carriers, such as access charges, when determining the relevant amount of each carrier's telecommunications revenues for purposes of cost allocation. This is because the revenues attributable to such charges effectively would be counted twice in determining the relative number portability costs each carrier should pay—once for the carrier

paying such charges and once for the carrier receiving them. We believe that a reasonable, equitable, and competitively neutral measure of the competitive benefits which will result from number portability is each telecommunications carrier's gross telecommunications revenues minus charges to other telecommunications carriers. We seek comment on whether this proposal for recovery of the costs associated with regional databases comports with the standard set forth in section 251(e)(2), and whether there exists alternative ways of allocating this type of cost among the relevant carriers.

16. We currently require the NANPA to recover the costs of administering the NANP, and operating databases to perform such administration, from all telecommunications carriers. The recovery of these costs is allocated among all telecommunications carriers based on the carriers' gross revenues. In our recent *Interconnection NPRM* (61 FR 18311 (April 25, 1996)), we tentatively concluded that we need not take any further action to comply with section 251(e)(2)'s mandate that the cost of establishing telecommunications numbering administration arrangements be borne by all telecommunications carriers on a competitively neutral basis, in light of the action taken in the *Numbering Plan Order* (60 FR 38737 (July 28, 1996)).

17. With the implementation of long-term number portability measures, all carriers, including currently regulated incumbent LECs, will incur costs specific to the deployment and usage of number portability databases. Therefore, we seek comment on whether incumbent LECs should be able to recover their portion of the costs of facilities shared by all carriers in providing long-term number portability from their end users or from other carriers, and whether the Commission should prescribe the particular cost recovery mechanism. To the extent parties argue that such costs should be recovered from other carriers, we seek comment on whether such carriers should include all telecommunications carriers, such as other local exchange providers, CMRS providers, IXCs, and resellers, or only those carriers that have received ported numbers. In addition, assuming that we prescribe a particular recovery mechanism, we ask parties to identify alternative ways carriers may recover this type of cost from carriers (or end users).

18. We tentatively conclude the number portability costs of facilities shared by all carriers fall into three subcategories: (a) Non-recurring costs, including the development and implementation of the hardware and software for the database; (b) recurring (monthly or annually) costs, such as the maintenance, operation, security, administration, and physical property associated with the database; and (c) costs for uploading, downloading, and querying number portability database information. We seek comment on this tentative conclusion and ask whether there are other types of costs associated with the facilities that will be shared by all carriers.

19. We seek comment on whether the first two subcategories, non-recurring and recurring costs, should be recovered through monthly charges to the individual carriers using the database, allocated in proportion to each carrier's gross telecommunications revenues net of payments to other carriers, or from all carriers operating in areas where number portability is offered. We note that non-recurring charges could be recovered in a one-time payment or over time.

20. We believe that there are at least two methods for recovering the third subcategory of shared costs, *i.e.*, the costs of uploading, downloading, or querying the database. First, these costs could be recovered through usage charges assessed on those carriers that either access the database to upload number portability routing information, download such information, or directly query the database. Those carriers, including IXCs, could then either recover such costs from their own customer base, or choose not to recover such costs.

21. Second, the upload, download, and/or per-query costs could be folded into the monthly charges assessed on the carriers using the databases, which would be allocated in proportion to each carrier's gross telecommunications revenues. We believe this approach is most appropriate in those instances where it is not practical to determine the cost causer of the usage costs, *e.g.*, per-query costs. Under current database approaches, there is no direct correlation between the number of queries made and the number of telephone numbers that have been forwarded because queries will be performed on all calls to a particular switch once any single number has been transferred from that switch. We invite commenting parties to provide credible, substantiated estimates of the amount of the usage costs, including upload, download, and per-query costs, to the extent applicable, and whether such costs will be incurred on a per-minute, per-call, or other basis. We also seek comment on these and alternative methods for recovering per-query costs. Parties are asked to state with specificity the advantages and disadvantages of each.

22. In accordance with the 1996 Act, the costs of number portability are to be recovered from all telecommunications carriers on a competitively neutral basis. We seek comment on what steps we need to take to ensure that this requirement is satisfied for all shared industry costs. For instance, we seek comment on whether it is necessary for the Commission to establish a mechanism to ensure that the LNPA(s) recovers its costs in a competitively neutral fashion. We also seek comment on what mechanism(s), *e.g.*, federal tariffs, periodic reports, etc., should be utilized to ensure compliance with the statutory requirement and under what authority the Commission can impose such obligations. We note that section 251(e)(1) requires the Commission to create or designate one or more impartial entities to administer telecommunications numbering, and provides the Commission with exclusive jurisdiction over the NANP, and section 251(e)(2) gives the Commission the authority to establish rules by which carriers must bear the costs of telecommunications numbering administration and number portability. We seek comment on the relevance of these provisions to the Commission's authority to impose obligations on the LNPA(s).

b. Direct Carrier-Specific Costs to Implement Number Portability

23. Carrier-specific costs directly related to number portability include, for example, the costs of purchasing the switch software necessary to implement a long-term number portability solution. There are at least two ways of allocating these carrier-specific costs. First, we could require individual carriers to bear their own costs of deploying number portability in their networks. Second, we could require all carriers in a given region to pool their number portability costs, which then would be spread across all carriers providing and using number portability based on some allocator, such as gross telecommunications revenues or number of subscriber lines. We seek comment on whether this proposal comports with the standard set forth in section 251(e)(2), and whether there exist alternative ways of allocating this type of cost among the relevant carriers.

24. We seek comment on whether we can and should mandate a mechanism by which incumbent LECs or others then may recover these costs, from either end users or other carriers (such as other local exchange service

providers, CMRS providers, IXCs, and resellers), and ask that parties identify the jurisdictional basis for such authority.

25. If the Commission were to permit costs to be recovered from consumers, there are at least two options. One option would be to allow carriers the flexibility to recover their number portability-specific costs from their customers in whatever manner the carrier chooses. A second option would be to require carriers to recover their number portability-specific costs through a number portability charge assessed on their end user customers located in areas where number portability is available. We seek comment on the advantages and disadvantages of these proposals and any alternative mechanisms for recovering these costs from consumers. Parties favoring a specific option should comment on whether their preferred approach is consistent with principles of competitive neutrality.

26. We note that several additional issues are raised if the carrier-specific, number portability-specific costs are to be passed on to consumers. Therefore, we seek comment on whether, under any cost recovery mechanism, the cost to consumers should: (1) Vary among carriers in a given geographic region; (2) remain constant among all carriers in a given geographic region; or (3) vary among different geographic regions, *e.g.*, states or LATAs (while remaining constant within that region, *i.e.*, state or LATA). For each of these approaches, we ask whether the costs to consumers should be permitted to change, for example, on a monthly or annual basis. We also seek comment on whether carriers should charge their customers a single, one-time charge, a monthly fee, or some percentage of the customer's monthly bill, to recover their carrier-specific number portability-specific costs. To the extent this Commission permits carriers to recover their costs through use of a number portability charge, we seek comment on whether such a charge should be specifically identified on consumer bills from those carriers as a separate line item. We seek comment on whether any such charge should be filed as a tariff at either the federal or state level.

27. Finally, we seek comment on whether carriers should be permitted to recover carrier-specific, number portability-specific costs from other carriers, through increases in charges for regulated services. Parties that advocate increases in charges for regulated services are asked to specify which charges should be increased and under what jurisdictional authority the Commission can prescribe such increases.

c. Indirect Carrier-Specific Costs to Implement Number Portability

28. We tentatively conclude that carrier-specific costs not directly related to number portability should be borne by individual carriers as network upgrades. As such, carrier-specific costs not directly related to number portability are not subject to the requirements set forth in section 251. We seek comment on this tentative conclusion and on alternative methods for recovering this type of cost.

29. Carrier-specific costs that are not directly related to the provision of number portability include, for example, the costs of upgrading SS7 capabilities or adding intelligent network (IN) or advanced intelligent network (AIN) capabilities. These costs are associated with the provision of a wide variety of services unrelated to the provision of number portability, such as CLASS features. Provision of these services will facilitate the ability of incumbent carriers to compete with the offerings of new entrants.

30. Incumbent LECs, as well as new entrants, will be required to incur these costs to support the provision of number portability and other services. While some incumbent LECs may have to upgrade existing networks and infrastructure, new entrants will need to design their networks from the outset to include these capabilities. Many incumbent LECs, though, may already have the necessary network capabilities to support the provision of long-term number portability, thus minimizing the need to incur upgrade costs. By limiting the deployment of long-term portability to those geographic areas where carriers are already offering, or are likely to offer, competing telephone exchange and exchange access services, we limit these expenditures and their recovery to areas where the incumbent carriers would, solely for competitive reasons, likely upgrade their networks. We note that this approach is also consistent with that taken in implementing 800 number portability, where LECs recovered the core costs of deploying SS7 capabilities as network upgrades from all end users.

31. We seek comment on whether we should specify a particular recovery mechanism for carrier-specific costs not directly related to number portability, and on alternative methods of recovering such costs from consumers or other carriers. In addition, we believe that due to the inevitable implementation of switch and other network upgrades to support long-term number portability and other AIN capabilities, networks will operate with greater efficiencies, resulting in increased productivity. We seek comment on whether such future network design modifications should be considered in determining the extent to which carriers may recover carrier-specific, non-number portability-specific costs, and if so, how they should be considered.

d. Price Cap Treatment

32. If this Commission were to specify a particular method of cost recovery from end users, such requirement would include companies that are subject to price cap treatment. Price cap regulation may affect carriers' ability to recover their costs under the methods described above, or other possible methods, because it restricts the flexibility with which price cap carriers may price various services. We tentatively conclude that price cap carriers should be permitted to treat as an exogenous cost any carrier-specific, number portability-specific costs they incur, but that such carriers should not be permitted to treat as an exogenous cost any carrier-specific, non-number portability-specific costs. These conclusions are consistent with our 800 Access proceeding where costs specific to 800 access were accorded exogenous cost treatment, while core SS7 costs were treated as general network upgrades. We, therefore, seek comment specifically on how price cap companies should be permitted to recover costs for facilities shared by all carriers; carrier-specific, number portability-specific costs; and carrier-specific, non-number portability-specific costs. In particular, we seek comment on whether price cap companies should be permitted to treat exogenously any of the above number portability-specific cost categories. We also seek comment on whether these costs, alternatively, should be placed in a new price cap basket or an existing basket. If parties recommend that such costs are to be placed in an existing basket, we ask parties to identify which basket would be most appropriate.

II. Procedural Matters

A. Ex Parte

33. This is a non-restricted notice and comment rulemaking. *Ex parte* presentations are permitted, except during the Sunshine period, provided they are disclosed as provided in the Commission's rules.

B. Regulatory Flexibility Act

34. As required by section 603 of the Regulatory Flexibility Act, 5 U.S.C. 601

et seq. (1981), the Commission prepared an Initial Regulatory Flexibility Analysis (IRFA) of the expected impact on small entities resulting from the policies and proposals set forth in this FNPRM. The IRFA appears at Appendix C of the FNPRM. Written public comments are requested on the IRFA. These comments must be filed in accordance with the same filing deadlines as comments on the remainder of the FNPRM, but they must have a separate and distinct heading designating them as responses to the regulatory flexibility analysis. The Secretary shall cause a copy of the FNPRM, including the IRFA, to be sent to the Chief Counsel for Advocacy of the Small Business Administration in accordance with section 603(a) of the Regulatory Flexibility Act.

35. *Reason for Action:* The Commission, in compliance with sections 251(b)(2) and 251(d)(1) of the Act, proposes rules and procedures intended to ensure the prompt implementation of telephone number portability with the minimum regulatory and administrative burden on telecommunications carriers. The rules proposed in the FNPRM are necessary to implement section 251(e)(2) of the Act, which requires that the costs of number portability be borne by all telecommunications carriers on a competitively neutral basis.

36. *Objectives and Legal Basis for Proposed Rules:* The Commission's objective in issuing the FNPRM is to propose and seek comment on rules establishing a cost recovery mechanism for carriers to use in implementing a long-term number portability method pursuant to the Act and in accordance with our Report and Order in this proceeding. Specifically, our goal is to propose rules which implement section 251(e)(2) of the Act, requiring that the cost of ''number portability be borne by all telecommunications carriers on a competitively neutral basis as determined by the Commission.'' 47 U.S.C. 251(e)(2). The legal basis for action as proposed in the FNPRM is contained in sections 1, 4(i), 4(j), 201–205, 218, 251(b), 251(e), and 332 of the Communications Act of 1934, as amended. 47 U.S.C. 151, 154(i), 154(j), 201–205, 218, 251(b), 251(d), 251(e), 332.

37. *Description and Estimated Number of Small Entities Affected:* The rules governing long-term number portability apply to all LECs, including incumbent LECs as well as new LEC entrants, and also apply to cellular, broadband PCS, and covered SMR providers. According to the SBA definition, incumbent LECs do not qualify as small businesses because they are dominant in their field of operation. Accordingly, we will not address the impact of these rules on incumbent LECs.

38. However, our rules may have a significant economic impact on a substantial number of small businesses insofar as they apply to telecommunications carriers other than incumbent LECs. The rules may have such an impact upon new entrant LECs as well as cellular, broadband PCS, and covered SMR providers. Based upon data contained in the most recent census and a report by the Commission's Common Carrier Bureau, we estimate that 2,100 carriers could be affected. We have derived this estimate based on the following analysis:

39. According to the 1992 Census of Transportation, Communications, and Utilities, there were approximately 3,469 firms with under 1,000 employees operating under the Standard Industrial Classification (SIC) category 481—Telephone. See U.S. Dept. of Commerce, Bureau of the Census, *1992 Census of Transportation, Communications, and Utilities* (issued May 1995). Many of these firms are the incumbent LECs and, as noted above, would not satisfy the SBA definition of a small business because of their market dominance. There were approximately 1,350 LECs in 1995. Industry Analysis Division, FCC, *Carrier Locator: Interstate Service Providers* at Table 1 (Number of Carriers Reporting by Type of Carrier and Type of Revenue) (December 1995). Subtracting this number from the total number of firms leaves approximately 2,119 entities which potentially are small businesses which may be affected. This number contains various categories of carriers, including competitive access providers, cellular carriers, interexchange carriers, mobile service carriers, operator service providers, pay telephone operators, PCS providers, covered SMR providers, and resellers. Some of these carriers—although not dominant—may not meet the other requirement of the definition of a small business because they are not ''independently owned and operated.'' *See* 15 U.S.C. 632. For example, a PCS provider which is affiliated with a long distance company with more than 1,000 employees would be disqualified from being considered a small business. Another example would be if a cellular provider is affiliated with a dominant LEC. Thus, a reasonable estimate of the number of ''small businesses'' affected by this Order would be approximately 2,100. We request comment on this estimate. These entities could include various categories of carriers, including competitive access providers, cellular carriers, interexchange carriers, mobile service carriers, operator service providers, pay telephone operators, PCS providers, covered SMR providers, and resellers. The SIC codes which describe these groups are 4812 and 4813.

40. *Reporting, Recordkeeping and Other Compliance Requirements:* The FNPRM requests comment on the appropriate method by which the costs of long-term number portability should be recovered. One possible cost recovery method would be based upon a percentage of a carrier's gross revenues. Such a rule, if promulgated, would not impose a reporting requirement on LECs because they already file information about gross revenues with the Commission for other purposes. There are no other reporting requirements contemplated by the FNPRM.

41. *Federal Rules Which Overlap, Duplicate or Conflict with these Rules:* None.

C. Notice and Comment Provision

42. Pursuant to applicable procedures set forth in sections §§ 1.415 and 1.419 of the Commission's Rules, 47 CFR 1.415 and 1.419, interested parties may file comments on this FNPRM on or before August 16, 1996, and reply comments on or before September 16, 1996. To file formally in this proceeding, parties must file an original and twelve copies of all comments, reply comments, and supporting comments. Parties wanting each Commissioner to receive a personal copy of their comments must file an original plus sixteen copies. Comments and reply comments should be sent to the Office of the Secretary, Federal Communications Commission, 1919 M Street, NW., Room 222, Washington, DC 20554. In addition, parties should file two copies of any such pleadings with the Competitive Pricing Division, Common Carrier Bureau, Room 518, 1919 M Street, NW., Washington, DC 20554. Parties should also file one copy of any documents filed in this docket with the Commission's copy contractor, International Transcription Services, Inc. (ITS, Inc.), 2100 M Street, NW., Suite 140, Washington, DC 20037 (202/857–3800). Comments and reply comments will be available for public inspection during regular business hours in the FCC Reference Center, Room 239, 1919 M Street, NW., Washington, DC 20554.

43. In order to facilitate review of comments and reply comments, both by parties and by Commission staff, we require that comments be no longer than forty (40) pages and reply comments be no longer than twenty five (25) pages.

Empirical economic studies, copies of relevant state orders, and proposed rule text will not be counted against these page limits. Specific rule proposals should be filed as an appendix to a party's comments or reply comments. Such appendices may include only proposed text for rules that would implement proposals set forth in the parties' comments and reply comments in this proceeding, and may not include any comments or arguments. Proposed rules should be provided in the format used for rules in the Code of Federal Regulations and should otherwise conform to the Comment Filing Procedures set forth in this order. Comments and reply comments must include a short and concise summary of the substantive arguments raised in the pleading. Comments and reply comments also must clearly identify the specific portion of this FNPRM to which a particular comment or set of comments is responsive. Parties will not be permitted to file more than a total of ten (10) pages of ex parte submissions, excluding cover letters, except in response to direct requests from Commission staff. This would not include written *ex parte* filings made solely to disclose an oral *ex parte* contact. *Ex parte* filings in excess of this limit will not be considered as part of the record in this proceeding.

44. Parties also are asked to submit comments and reply comments on diskette. Such diskette submissions would be in addition to and not a substitute for the formal filing requirements addressed above. Parties submitting diskettes should submit them to Wanda M. Harris, Competitive Pricing Division of the Common Carrier Bureau, 1919 M Street, NW., Room 518, Washington, DC., 20554. Such a submission should be on a 3.5 inch diskette formatted in an IBM compatible form using MS DOS 5.0 and WordPerfect 5.1 software. The diskette should be submitted in ''read only'' mode. The diskette should be clearly labelled with the party's name, proceeding, type of pleading (comment or reply comments) and date of submission. The diskette should be accompanied by a cover letter.

D. Ordering Clause

It is ordered that, pursuant to the authority contained in sections 1, 4(i), 4(j), 201–205, 218, 251, and 332 of the Communications Act as amended, 47 U.S.C. §§ 151, 154(i), 154(j), 201–205, 218, 251, and 332, a further notice of proposed rulemaking is hereby adopted.

List of Subjects

47 CFR Part 20

Federal Communications Commission, Local number portability, Radio, Telecommunications.

47 CFR Part 52

Federal Communications Commission, Cost recovery, Local exchange carrier, Local number portability, Long-term database methods, Numbering, Telecommunications.

Federal Communications Commission.

William F. Caton,

Acting Secretary.

[FR Doc. 96–18479 Filed 7–24–96; 8:45 am]

BILLING CODE 6712–01–P

---

47 CFR Part 24

[WT Docket No. 96–148; GN Docket No. 96–113; FCC 96–287]

Geographic Partitioning and Spectrum Disaggregation by Commercial Mobile Radio Services Licensees; and Implementation of Section 257 of the Communications Act—Elimination of Market Entry Barriers

AGENCY: Federal Communications Commission.

ACTION: Notice of Proposed Rulemaking.

SUMMARY: In this *Notice of Proposed Rulemaking* in WT Docket No. 96–148 and GN Docket No. 96–113, the Commission proposes modifications to the broadband personal communications services (PCS) rules to expand geographic partitioning and spectrum disaggregation provisions. The Commission also solicits comment on certain issues relating to these rules. The Commission's objective in expanding the partitioning and disaggregation rules is to enable a wide variety of applicants, including small businesses, to overcome barriers to entry in the broadband PCS market, to increase competition, and to expedite the provision of broadband PCS to areas that may not otherwise receive wireless services.

DATES: Comments must be filed on or before August 15, 1996. Reply comments are to be filed on or before August 30, 1996.

ADDRESSES: Federal Communications Commission, 1919 M Street, N.W., Washington D.C. 20554.

FOR FURTHER INFORMATION CONTACT: David Nall or Mika Savir, Commercial Wireless Division, Wireless Telecommunications Bureau, at (202) 418–0620.

SUPPLEMENTARY INFORMATION: This *Notice of Proposed Rulemaking* in WT Docket No. 96–148 and GN Docket No. 96–113, adopted on June 28, 1996, and released on July 15, 1996, is available for inspection and copying during normal business hours in the FCC Reference Center, Room 575, 2000 M Street N.W., Washington D.C. The complete text may also be purchased from the Commission's copy contractor, International Transcription Service, Inc., 2100 M Street, N.W., Suite 140, Washington D.C. 20037, (202) 857–3800. Synopsis of *Notice of Proposed Rulemaking:*

I. Background

1. In the *Broadband PCS Memorandum Opinion and Order,* Amendment of the Commission's Rules to Establish New Personal Communications Services, GN Docket No. 90–314, *Memorandum Opinion and Order,* 59 FR 32830 (June 24, 1994) (*Broadband PCS Memorandum Opinion and Order*), the Commission declined to allow general geographic partitioning, noting that licensees might use partitioning as a means of circumventing construction requirements. The Commission observed, however, that a limited partitioning scheme might facilitate participation by certain groups, including rural telephone companies and other designated entities, in the provision of broadband PCS. The Commission stated that it would consider the issue of geographic partitioning in a future proceeding to establish competitive bidding rules for broadband PCS.

2. The Commission established geographic partitioning provisions for rural telephone companies in the *Competitive Bidding Fifth Report and Order,* Implementation of Section 309(j) of the Communications Act—Competitive Bidding, PP Docket No. 93–253, 59 FR 37566 (July 22, 1995) (*Competitive Bidding Fifth Report and Order*). The Commission determined that partitioning would satisfy the Congressional mandate to provide an opportunity for rural telephone companies to participate at auction and in the provision of broadband PCS. The Commission decided that rural telephone companies could acquire a partitioned license (1) by forming an auction bidding consortium comprised entirely of rural telephone companies, and partitioning the license(s) won among consortium members; or (2) through private negotiation, either before or after an auction. The Commission required that partitioned areas conform to established

geopolitical boundaries (such as county lines) and that each area include all portions of the rural telephone company's wireline service area within the PCS service area.

3. In the *Competitive Bidding Further Notice of Proposed Rulemaking,* Implementation of Section 309(j) of the Communications Act—Competitive Bidding, PP Docket No. 93–253, *Further Notice of Proposed Rulemaking,* 59 FR 41426 (August 12, 1994) (*Competitive Bidding Further Notice of Proposed Rulemaking*), the Commission requested comment on whether to extend post-auction partitioning of broadband PCS licenses to women- and minority-owned businesses. The Commission observed that allowing these entities to acquire partitioned licenses may, like rural telephone companies, facilitate their ability to participate in the provision of broadband PCS.

4. In the *Broadband PCS Memorandum Opinion and Order,* the Commission held that broadband PCS licensees may disaggregate licensed broadband PCS spectrum under the current rules after January 1, 2000 if they have met the five-year construction requirement. The Commission reasoned that this limit on spectrum disaggregation for broadband PCS would allow the PCS market to take shape and prevent anti-competitive practices with regard to disaggregation. The Commission indicated, however, that it would initiate a proceeding at a later date to specify rules for allowing spectrum disaggregation.

II. Notice of Proposed Rulemaking

A. Partitioning

1. License Eligibility

The Commission proposes to relax the broadband PCS geographic partitioning rules for the A, B, D, and E spectrum blocks to allow any party to acquire a license for a partitioned geographic service area that meets the eligibility requirements to be a broadband PCS licensee. The Commission tentatively concludes that this would allow spectrum to be used more efficiently, speed service to underserved areas, and increase competition. The Commission invites comment on this proposal. The Commission solicits comment on whether this proposal to liberalize the geographic partitioning rules would hinder a rural telephone company's ability to participate in the provision of broadband PCS.

2. Available License Area, Timing, and Financial Obligations

The Commission proposes that any partitioning of broadband PCS licenses be along county lines in the same manner that rural telephone companies must partition along county lines under the current rules. The Commission tentatively concludes that this would reduce the administrative burden and minimize interference coordination concerns. Commenters are invited to address the merits of the Commission's proposal.

7. *Non-entrepreneur block licensees.* The Commission believes that there may be significant advantages in broadening the partitioning rules to permit A, B, D, and E block broadband PCS licensees to partition a portion of their license area to any qualifying entity at any time after receiving a license. The Commission proposes that all licensees in the A, B, D, and E blocks be permitted to partition their license area along county lines, at any time. Commenters are invited to discuss whether the Commission should impose any limitations on the size of geographic area that a licensee would be allowed to partition in the non-entrepreneurs' blocks.

8. *Licensees with competitive bidding benefits.* The Commission observes that small businesses face certain barriers to entry into the broadband PCS market that changes in the partitioning rules may address. The Commission proposes that an entrepreneurs' block (C and F block) licensee be permitted to partition at any time to other parties that would be eligible for a license in those blocks. The Commission seeks comment on this tentative conclusion.

9. The Commission seeks comment on the treatment of installment plans for winning auction bids owned by partitioning licensees. The Commission seeks comment on whether an entrepreneur block licensee who partitions to another entrepreneur should be required to repay, on an accelerated basis, a portion of the outstanding principle balance owed under an installment payment plan. The Commission seeks comment on whether the partitionee should be required to guarantee payment of a portion of the partitioner's obligation.

10. The Commission tentatively concludes that some form of the unjust enrichment requirements should apply to a partitioning licensee that has received bidding credits or is paying the winning bid through installment payments when the partitionee qualifies as an entrepreneur, but would receive less favorable installment plan payments. The Commission seeks comment on whether such unjust enrichment requirements in this case should be on a proportional basis, and how the payments should be calculated.

11. The Commission proposes to apply the current five-year restriction against complete license transfers to prohibit partitioning and/or disaggregation by an entrepreneur block licensee to a non-entrepreneur during the first five years of the license period. The Commission states that applying this holding period to partitioning and disaggregation will ensure the objective that entrepreneurs and small businesses continue to participate as PCS licensees for substantial periods of time, and through that participation obtain experience and profits that will enable their long-term participation in communications industries. The Commission tentatively concludes that after the five-year holding period, unjust enrichment requirements should apply as a condition for approval of an application for a partitioning transfer of an entrepreneur block license to a non-entrepreneur. The unjust enrichment provisions would include accelerated payment of bidding credits, unpaid principal, and accrued unpaid interest, and would be applied on a proportional basis. The Commission seeks comment on how such unjust enrichment amounts should be calculated. The Commission seeks comment on whether the price paid by the partitionee should be considered in determining the percentage of the outstanding principle balance to be repaid.

12. The Commission seeks comment on what the respective obligations of the participants in a partitioning transfer should be, and whether each party should be required to guarantee all or a portion of the partitionee's original auctions-related obligation in the event of default or bankruptcy by any of the parties to the partitioning transfer. The Commission seeks comment on whether the partitioner (the original licensee) should have a continuing obligation with respect to the entire initial geographic area. The Commission seeks comment on whether partitioning parties should be able to determine which party has a continuing obligation with respect to the original licensed area.

13. The Commission tentatively concludes that the proposals to permit partitioning in the manner described above would allow broadband PCS spectrum to be used most efficiently, speed service to unserved or underserved areas, and facilitate competition. The Commission tentatively concludes that the proposal to permit partitioning by entrepreneur block licensees to similarly qualified parties would ensure that these entities retain a significant presence in the market. Additionally, this proposal may

help small business licensees compete more effectively in the areas they retain and assist in the elimination of entry barriers to the PCS market. The Commission solicits comment on this analysis of the intended effects of these proposals.

3. License Term

14. The Commission proposes that a partitionee be authorized to hold its license for the remainder of the partitioner's original ten-year license term. The Commission tentatively concludes that this approach is appropriate because a licensee, through partitioning, should not be able to confer greater rights than it was awarded under the terms of its license grant. The Commission solicits comment on this tentative conclusion.

15. The Commission also proposes that a partitionee be afforded the same renewal expectancy as a market area licensee. Specifically, a partitionee would be granted a preference at a comparative renewal proceeding if it can demonstrate that it has provided ''substantial'' service during its past license term and has substantially complied with applicable Commission rules, policies and the Communications Act of 1934, as amended. The Commission invites comment on this proposal.

4. Construction Requirements

16. In the Broadband PCS Memorandum Opinion and Order, the Commission found that broadband PCS would likely be a highly competitive service and that licensees would have incentives to construct facilities to meet the service demands in their licensed areas. Nevertheless, the Commission imposed minimum construction requirements to expedite service to the public and promote efficient use of the spectrum. Specifically, the Commission required 30 MHz broadband PCS licensees to construct facilities that provide coverage to one-third of the population of their service area within five years of the license grant and two-thirds of the population within ten years. Ten MHz licensees are required to provide coverage to one-fourth of the service area's population within five years or, alternatively, they may submit a showing to the Commission demonstrating that they are providing substantial service.

17. The Commission tentatively concludes that both the partitioner and partitionee should be subject to coverage requirements that ensure that both portions of a partitioned licensing area will receive service. This proposal would facilitate partitioning by offering a choice between two different build-out options, which could be negotiated between the partitioner and partitionee. Applicants would then select in their assignment and transfer applications the construction option they would be obligated to meet.

18. Under the first option, a partitionee would be obligated to satisfy the same construction requirements as the original licensee within its partitioned area, regardless of when it acquired the partitioned license. The Commission invites comment on this option.

19. As a second option, the Commission proposes more modest build-out requirements for a partitioned area where the original licensee has met its five-year build-out requirements and certifies that it will meet the ten-year coverage requirements for its entire license area. Specifically, the Commission proposes that partitionees must only satisfy the substantial service requirement for renewal expectancy for its partitioned area by the end of the original ten-year license term. For example: an A Block licensee who meets its five-year build-out requirements within three years after receiving its license, may, in its partitioning application, certify that it will meet the ten-year coverage requirement for its original license. In this scenario, the partitionee would only be required to meet the substantial service requirement for its partitioned area at the end of the A Block licensee's original ten-year license term.

20. The Commission tentatively concludes that establishing flexible build-out requirements would encourage partitioning to entities that have a sincere interest in providing broadband PCS and would thereby expedite the provision of service to areas that otherwise may not receive it as quickly. The Commission also observes that this option may facilitate partitioning agreements, especially in the latter portion of a license term, by acknowledging licensees' efforts to bring broadband PCS service to their licensed areas. The Commission solicits comment on these build-out proposals.

B. Disaggregation

1. Timing of Disaggregation

21. Currently, a broadband PCS licensee who has met the five-year construction requirement may assign portions of its licensed PCS spectrum after January 1, 2000. In the *Broadband PCS Memorandum Opinion and Order,* the Commission stated that allowing immediate disaggregation of spectrum before that time may impede competition in the provision of broadband PCS.

22. The Commission tentatively concludes that the prohibitions on disaggregation may no longer be warranted. The Commission tentatively concludes that the current prohibitions on disaggregation may constitute a barrier to market entry for small businesses and other entrepreneurs which may lack the resources to participate successfully in auctions for 30 MHz and 10 MHz broadband PCS spectrum blocks. The Commission proposes to eliminate such market entry barriers by making changes in the disaggregation rules. The Commission seeks comment on these tentative conclusions.

23. The Commission proposes to allow spectrum disaggregation prior to January 1, 2000, and to eliminate the condition that the licensee must satisfy the five-year build-out requirements before disaggregating. The Commission invites comment on whether to retain the five-year build-out requirement before allowing disaggregation. Commenters should discuss whether the goals of elimination of market entry barriers, efficient spectrum use, expedited access to broadband PCS service, and competition would be better served by eliminating this restriction. Specifically, the Commission proposes to allow non-entrepreneurs to disaggregate to other qualified entities at any time, and to allow entrepreneurs to disaggregate to other qualified entrepreneurs at any time, but entrepreneurs would be restricted from disaggregating spectrum to non-entrepreneurs until after the five-year holding period. Commenters should discuss whether any alternate restrictions on allowing disaggregation may be appropriate.

2. Amount of Spectrum to Disaggregate

24. In the *Broadband PCS Memorandum Opinion and Order,* the Commission established six frequency blocks of spectrum for licensed broadband PCS. Three of the blocks (A, B, and C) each have 30 MHz of spectrum, while the remaining blocks (D, E, and F) have 10 MHz of spectrum each. The Commission determined that this broadband PCS spectrum allocation plan would facilitate the rapid deployment of broadband PCS and enable broadband PCS licensees to compete fully with other commercial mobile radio services. The Commission determined that 30 MHz blocks of spectrum would facilitate competition and the rapid development and implementation of the fullest range of PCS services and ensure that PCS is

more fully competitive with other mobile radio services. The Commission observed that 10 MHz licensees may be able to provide services ranging from specialized applications to services comparable to those now provided by cellular systems, through the use of advanced digital techniques, such as Code Division Multiple Access (CDMA) and Time Division Multiple Access (TDMA), and micro-cellular technology.

25. The Commission seeks comment and proposals for the amount of spectrum that a licensee should be required to retain if disaggregation is allowed on a more expedited basis. The Commission seeks comment generally concerning whether some restriction or limit should be placed on the amount of spectrum a licensee may disaggregate or the timing of such disaggregation.

26. The Commission proposes that licensees disaggregate frequencies in accordance with the pairings specified in our rules. The Commission tentatively concludes that for these purposes, disaggregation for broadband PCS in blocks smaller than a 1 MHz block of paired frequencies will not be permitted. The Commission seeks comment on this tentative conclusion. The Commission requests that commenters suggesting alternative approaches provide technical justifications and other relevant support in responding to this issue.

27. The Commission seeks comment on whether broadband PCS licensees should be required to retain or acquire spectrum above the administrative minimum of 1 MHz. The Commission also seeks comment on the minimum amount of spectrum a disaggregatee could utilize for the provision of broadband type services. The Commission seeks comment generally on the relevance of the distinction between broadband and narrowband for purposes of disaggregation rules.

28. The Commission tentatively concludes that elimination of the current prohibitions on broadband PCS disaggregation would be consistent with the recent elimination of the cellular/PCS cross-ownership rule and the 40 MHz PCS spectrum cap, and the retention of the 45 MHz CMRS spectrum cap, because such actions facilitate market transfers of spectrum among cellular and PCS licensees while maintaining a provision to ensure a diversity of service providers. The Commission requests comment on this tentative conclusion, and generally on the impact of the present 45 MHz spectrum cap on these proposals.

3. Matters Relating to Entrepreneur Block Licensees

29. The Commission proposes to allow all entrepreneur block licensees to disaggregate to similarly qualifying parties at any time without restriction, and to parties not eligible for entrepreneur block licenses after a five-year holding period. The Commission tentatively concludes that if an entrepreneur block licensee is permitted to disaggregate to a non-entrepreneur entity after the five-year holding period, the disaggregating entrepreneur block licensee will be required to repay the unjust enrichment provisions on a proportional basis. These unjust enrichment provisions would include accelerated payment of bidding credits, unpaid principal, and accrued unpaid interest, and would be applied on a proportional basis. The Commission seeks comment on how such unjust enrichment amounts should be calculated. The Commission seeks comment on whether the price paid by the disaggregating party should be considered in determining the percentage of the outstanding principle balance to be repaid.

30. The Commission seeks comment on what the respective obligations of the participants in a disaggregation transfer should be, and whether each party should be required to guarantee all or a portion of the disaggregatee's original auctions-related obligation in the event of default or bankruptcy by any of the parties to the disaggregation transfer. The Commission seeks comment on whether the disaggregator (the original licensee) should have a continuing obligation with respect to the entire initial license. The Commission seeks comment on whether the parties should have available a choice of options, ranging, for example, from an accelerated payment based on purchase price to a guarantee for a larger payment by one party in the event another party defaults. Parties are also invited to comment on whether the disaggregating parties should be able to determine which party has a continuing obligation with respect to the original licensed area.

31. The Commission tentatively concludes that if an entrepreneur block licensee is permitted to disaggregate to an entrepreneur that would not qualify for the same level of benefits as the disaggregating licensee, the disaggregating entrepreneur block licensee will be required to repay a portion of the unjust enrichment provisions as they apply to a full assignment of a license. The Commission seeks comment on whether this should be a proportional amount of its bidding credits, unpaid principal, and accrued unpaid interest to the U.S. Treasury, and how the amounts should be calculated. The Commission seeks comment on what provisions, if any, should be adopted to address the situation of an entrepreneur block licensee's disaggregation followed by default in payment of a winning bid at auction.

32. The Commission seeks comment on whether there should be different requirements for entrepreneur block licensees and for non-entrepreneur block licensees regarding the amounts of spectrum which a licensee must retain or may disaggregate.

4. Construction Requirements

33. The Commission's rules currently require 30 MHz broadband PCS licensees to construct facilities that provide coverage to one-third of the population of their service area within five years of the initial license grant and two-thirds of the population within ten years. Ten MHz licensees are required to construct facilities that provide coverage to one-fourth of the service area's population within five years or, alternatively, they may submit a showing to the Commission demonstrating that they are providing substantial service.

34. To address the concerns raised in the *Broadband PCS Memorandum Opinion and Order* about anti-competitive incentives to disaggregate and engage in spectrum warehousing, the Commission proposes two construction build-out options to apply to entities receiving disaggregated spectrum that do not already possess a broadband PCS license in the same geographic service area. Such applicants seeking to receive disaggregated spectrum would select the construction option for which they would be obligated to meet in their assignment and transfer applications. The Commission tentatively concludes that this proposal would prevent licensees from warehousing spectrum and would enable new entrants to provide service.

35. Under the first option, a disaggregatee entering the geographic market would be obligated to satisfy the same construction requirements as the licensee, regardless of when it acquired the disaggregated spectrum. For example, an entity that acquires spectrum from a 30 MHz broadband PCS licensee (an A, B, or C block licensee) would be obligated to provide service to at least one-third of the population in the license area within five years of the underlying license term and two-thirds of the population in the

license area by the end of the ten-year license term. An entity that acquires spectrum from a 10 MHz broadband PCS licensee (a D, E, or F block licensee) would have to provide adequate service to at least one-quarter of the population in the license area or make a showing of substantial service at the five-year benchmark. The Commission tentatively concludes that this approach would prevent spectrum warehousing and ensure expedited access to broadband PCS services. Commenters are invited to discuss the merits of this option.

36. As a second option, the Commission proposes a modified build-out requirement after the disaggregating licensee has met its five-year build-out requirement and certifies that it will meet the ten-year construction requirement by the end of its license term. Specifically, a disaggregatee must only satisfy the five-year build-out requirements for the license area by the end of the original ten-year license term. The Commission tentatively concludes that this build-out option will facilitate the rapid introduction of broadband PCS service and increase spectrum efficiency. The Commission seeks comment on this approach. Commenters are also invited to address whether these build-out requirements should apply where a licensee disaggregates a portion of its spectrum after the initial ten-year license term has expired.

37. The Commission proposes to require, as a pre-condition for approving a proposed disaggregation, certifications from both the disaggregator and the disaggregatee that the time remaining before the ten-year construction benchmarks is sufficient for the disaggregator and disaggregatee to meet the pertinent construction benchmark for their respective licenses. This proposal would ensure against delay in the build-out of PCS, and place all parties on notice that the construction requirements must be considered during the negotiations. In addition, disaggregatees must file maps and other supporting documents showing compliance with the construction requirements within the appropriate five-year and ten-year bench marks of the date of their initial licenses.

38. The Commission proposes that if a licensee fails to meet the construction requirements, the license of the disaggregator or disaggregatee would revert back to the Commission. In light of the fact that the disaggregator and disaggregatee are each licensees, their prospective construction requirements are independent from each other and failure to satisfy one construction requirement will not affect the renewal of the other.

39. The Commission proposes no new construction requirements for disaggregatees already possessing a broadband PCS license in a geographic service area, on the premise that these licensees are already subject to coverage requirements under their existing licenses. The Commission seeks comment on this proposal. The Commission seeks comment on the construction requirements, if any, that should apply to other CMRS licensees receiving disaggregated broadband PCS spectrum.

5. License Term

40. The Commission proposes a similar license term for disaggregation as for partitioning, *i.e.*, that a disaggregatee would be authorized to hold its license for the disaggregated spectrum for the remainder of the disaggregator's original ten-year license term. The Commission believes this approach is appropriate because a licensee, through disaggregation, should not be able to bestow greater rights than it was awarded under the terms of its license grant. The Commission seeks comment on whether administrative efficiency and convenience for licensees support a limited exception to this general rule. The Commission proposes that a disaggregatee be afforded the same renewal rights as a market area licensee. A disaggregatee would be granted a preference at a comparative renewal proceeding if it can demonstrate that it has provided ''substantial'' service during its past license term and has substantially complied with applicable Commission rules, policies, and the Communications Act. The Commission invites comment on this proposal.

C. Related Matters

1. Combination of Partitioning and Disaggregation

41. The Commission tentatively concludes that combinations of partitioning and disaggregation should be permitted. The Commission seeks comment on whether the benefits of allowing licensees to combine disaggregation and partitioning at any time outweigh factors supporting restrictions on such a combination. In those situations where the combination of partitioning and disaggregation is allowed under the proposed rules, the Commission proposes to implement the rules proposed for partitioning in the event there is a conflict in the application of the rules. The Commission seeks comment on where such conflicts conceivably could arise and on the overall approach to the combination of partitioning and disaggregation addressed herein.

2. Licensing

42. The Commission proposes to follow existing partial assignment procedures for broadband PCS licenses in reviewing requests for geographic partitioning, disaggregation, or a combination of both. Thus, the licensee must file an FCC Form 490 that is signed by both the licensee and qualifying entity. The qualifying entity would also file an FCC Form 430 unless a current FCC Form 430 is already on file with the Commission. An FCC Form 600 would be filed by the qualifying entity to receive authorization to operate in the market area which is being partitioned or to modify an existing station of the qualifying entity to include the new or additional market area being partitioned. The Commission seeks comment on these proposed licensing rules.

43. The Commission proposes that any requests for a partitioned license or disaggregated spectrum would contain the FCC Forms 490, 430, and 600 and be filed as one package under cover of the FCC Form 490. Parties are invited to comment on whether any additional procedures should be required. A broadband PCS disaggregatee must file FCC Form 430 qualifying it as a common carrier unless a current FCC Form 430 is already on file with the Commission. An FCC Form 600 should be filed by the disaggregatee to receive authorization to operate in the market area which is covered by the disaggregated spectrum or to modify an existing station of the disaggregatee to include the new or additional spectrum being disaggregated. Parties are invited to comment whether any additional procedures should be required.

3. Technical and Microwave Relocation Rules

44. In the *Broadband PCS Second Report and Order*, Amendment of the Commission's Rules to Establish New Personal Communications Services, GN Docket No. 90–314, *Second Report and Order*, 58 FR 59174 (November 8, 1993) (*Broadband PCS Second Report and Order*) the Commission adopted minimal technical standards to allow PCS to develop in the most rapid, economically feasible and diverse manner. The Commission tentatively concludes that the current technical rules with respect to service area boundary limits and protections, which provide for coordination and negotiation among licensees, should be maintained and applied to partitioned license areas. The Commission seeks

comment on this tentative conclusion. The Commission seeks comment on whether any modifications to the technical rules are needed to accommodate these partitioning and disaggregation proposals.

45. The Commission tentatively concludes that a new entrant PCS licensee who gains its license through partitioning or disaggregation should be treated as any other subsequent PCS licensee for purposes of the microwave relocation cost-sharing plan, including eligibility for installment plan payments if the transferee would be eligible for an installment plan equivalent to that enjoyed by the transferring licensee, unless the reimbursement obligations to which they would be subject have already been paid by the transferring licensee. The Commission seeks comment on this approach.

4. Clearinghouse for Spectrum.

46. The Commission seeks comment on whether establishing an electronic database to make more readily accessible the information about licensed PCS spectrum would lower market entry barriers, consistent with the mandate of Section 257 of the Telecommunications Act of 1996, or otherwise be in the public interest. The Commission requests comment on how to encourage the creation of private information clearinghouses on available spectrum and what procedures could be utilized to assist small businesses in obtaining available licenses or spectrum from licensees to meet very limited or defined telecommunications needs. The Commission also seeks comment on how to promote information clearinghouses or other market solutions so that the public can be informed about spectrum availability in particular geographic areas or excess or available spectrum that could be disaggregated in minimum amounts.

III. Conclusion

47. The Commission believes that these partitioning and disaggregation proposals are consistent with a pro-competitive deregulatory national policy framework and will promote the rapid creation of a competitive market to deliver broadband PCS to the largest number of consumers. These proposals are designed to meet the Congressional objectives of opening telecommunications markets to competition, providing advanced technologies and services efficiently and quickly, and identifying and eliminating market entry barriers for entrepreneurs and other small businesses in the provision and ownership of telecommunications services.

IV. Procedural Matters and Ordering Clauses

A. Regulatory Flexibility Act

Summary: As required by Section 603 of the Regulatory Flexibility Act, the Commission has prepared an Initial Regulatory Flexibility Analysis (IRFA) of the expected impact on small entities of the policies and rules proposed in this *Notice of Proposed Rulemaking.*

Reason for Action: This rulemaking proceeding was initiated to secure comment on proposals to modify our broadband PCS rules to permit partitioning and disaggregation for all Part 24 licensees. The proposals advanced in the *Notice of Proposed Rulemaking* are also designed to implement Congress' goal of giving small businesses the opportunity to participate in the provision of spectrum-based services.

Objectives: The Commission proposes changes to its rules for broadband PCS that are intended to facilitate the efficient use of broadband PCS spectrum, increase competition, and expedite the provision of broadband PCS service to areas that may not otherwise receive broadband PCS or other wireless services in the near term. These proposals seek to increase the level of small business participation in the provision of broadband PCS. The Commission proposes to allow broadband PCS licensees in the non-entrepreneurs' blocks to partition any portion of their geographic license area to entities that are eligible to be broadband PCS licensees. The Commission further proposes to allow entrepreneurs' block licensees to partition any portion of their licensed geographic area to entities that qualify as entrepreneurs and are otherwise eligible to be broadband PCS licensees. Additionally, the Commission proposes to eliminate the January 1, 2000 benchmark for disaggregation, and allow disaggregation any time after the broadband PCS licensee meets the five-year build-out requirement. Specifically, the Commission proposes to allow broadband PCS licensees in the non-entrepreneurs' blocks to disaggregate spectrum to entities that are eligible to be broadband PCS licensees. The Commission proposes to allow entrepreneurs' block licensees to disaggregate to another entrepreneur, otherwise qualified to be a broadband PCS licensee. Additionally, the Commission proposes to establish license terms that permit partitionees to hold partitioned licenses and disaggregatees to hold disaggregated spectrum for the remaining duration of the original ten-year license term. The Commission also proposes to establish construction requirements to ensure expedient access to broadband PCS service in partitioned areas to ensure coverage and increase spectrum efficiency. Finally, the Commission proposes to allow licensees to combine partitioning and disaggregation under limited circumstances.

Legal Basis: The proposed action is authorized under Sections 4(i), 257, 303(r) and 309(j) of the Communications Act of 1934, as amended, 47 U.S.C. §§ 154(i), 257, 303(r) and 309(j), as amended.

Reporting, Recordkeeping, and Other Compliance Requirements: The proposals under consideration in this *Notice of Proposed Rulemaking* include the possibility of imposing reporting and recordkeeping requirements for small businesses seeking licenses through the proposed partitioning and disaggregation rules. The information requirements would be used to determine if the licensee is a qualifying entity to obtain a partitioned license or disaggregated spectrum. This information will be a one-time filing by any applicant requesting such a license. The information will be submitted on the FCC Forms 490 (or 430 and/or 600 filed as one package under cover of the Form 490) which are currently in use and have already received OMB clearance. We estimate that the average burden on the applicant is three hours for the information necessary to complete these forms. We estimate that 75 percent of the respondents (which may include small businesses) will contract out the burden of responding. We estimate that it will take approximately 30 minutes to coordinate information with those contractors. The remaining 25 percent of respondents (which may include small businesses) are estimated to employ in-house staff to provide the information. Applicants (including small businesses) filing the package under cover of FCC Form 490 electronically will incur a $2.30 per minute on-line charge. On-line time would amount to no more than 30 minutes. We estimate that 75 percent of the applicants may file electronically. We estimate that applicants contracting out the information would use an attorney or engineer (average of $200 per hour) to prepare the information.

Federal Rules Which Overlap, Duplicate or Conflict With These Rules: None.

Description, Potential Impact, and Number of Small Entities Involved: The rule changes proposed in this proceeding will affect all small businesses which avail themselves of these rule changes, including small

businesses currently holding broadband PCS licenses who choose to partition and/or disaggregate, and small businesses who may acquire licenses through partitioning and/or disaggregation. The Commission is required to estimate in its Final Regulatory Flexibility Analysis the number of small entities to which a rule will apply, provide a description of such entities, and assess the impact of the rule on such entities. To assist the Commission in this analysis, commenters are requested to provide information regarding how many total broadband PCS entities, existing and potential, would be affected by the proposed rules in the *Notice of Proposed Rulemaking*. In particular, the Commission seeks estimates of how many broadband PCS entities, existing and potential, will be considered small businesses. ''Small business'' is defined as a firm that has revenues of less than $40 million in each of the last three calendar years. This definition was used in the PCS C block auction and approved by the Small Business Administration. The Commission seeks comment as to whether this definition is appropriate in this context. Additionally, the Commission requests each commenter to identify whether it is a small business under this definition. If the commenter is a subsidiary of another entity, this information should be provided for both the subsidiary and the parent corporation or entity.

The broadband PCS spectrum is divided into six frequency blocks designated A through F. The Commission has auctioned broadband PCS licenses in blocks A, B, and C. The Commission does not have sufficient information to determine whether any small businesses within the SBA-approved definition bid successfully for licenses A or B block auctions. There were 89 winning bidders that qualified as small businesses in the C block PCS auctions. Based on this information, the Commission concludes that the number of broadband PCS licensees affected by the rules proposed in this *Notice of Proposed Rulemaking* includes the 89 winning bidders that qualified as small entities in the C block broadband PCS auction.

The Commission estimates that up to 10,370 PCS licensees or potential licensees could take the opportunity to partition and/or disaggregate a license or obtain a license through partitioning and/or disaggregation. This estimate is based on the total number broadband PCS licenses auctioned and subject to auction, 2,074, and the estimate that each license would probably not be partitioned and/or disaggregated to more than five parties. The Commission notes that the A and B blocks each consist of 51 licenses (a total of 102 licenses) and the C, D, E, and F blocks each consist of 493 licenses (a total of 1,972 licenses). Currently the C and F block licensees and potential licensees (holding a total of 986 licenses) must be small businesses or entrepreneurs with average gross revenues over the past three years of less than $125 million. Under the proposed rules they will be permitted to partition and/or disaggregate to other qualified entrepreneurs. The A, B, D, and E block licensees and potential licensees (holding a total of 1,088 licenses) will also be permitted under the proposed rules to partition and/or disaggregate to small businesses.

At present, there have been no auctions held for the D, E, and F blocks of broadband PCS spectrum. The Commission anticipates a total of 1,479 licenses will be awarded in the D, E, and F block PCS auctions, which are scheduled to begin on August 26, 1996. Eligibility for the F block licenses is limited to entrepreneurs with average gross revenues of less than $125 million. However, there is no basis upon which to estimate the number of licenses that will be awarded to small businesses, nor is there a basis for an estimate as to how many small businesses will win D or E block licenses. Given the fact that nearly all radiotelephone companies have fewer than 1,000 employees, and that no reliable estimate of the number of D, E, and F block licensees can be made, the Commission assumes, for purposes of this IRFA that all of the licenses will be awarded to small businesses. The Commission believes that it is possible that a significant number of the up to 10,370 PCS licensees or potential licensees who could take the opportunity to partition and/or disaggregate a license or who could obtain a license through partitioning and/or disaggregation will be small businesses.

Any Significant Alternatives Minimizing the Impact on Small Entities Consistent with the Stated Objectives: The proposals advanced in the *Notice of Proposed Rulemaking* are designed to implement Congress' goal of giving small businesses, as well as other entities, the opportunity to participate in the provision of spectrum-based services. The impact on small entities in the proposals in the *Notice of Proposed Rulemaking* is the opportunity to enter the broadband PCS market through the partitioning and disaggregation proposals herein.

The rule changes proposed in the *Notice of Proposed Rulemaking* by the Commission are consistent with the mandate under the Communications Act of 1934, as amended, to identify and eliminate market entry barriers for entrepreneurs and small businesses in the provision and ownership of telecommunications services, and the mandate under Section 309(j) of the Communications Act of 1934, as amended, to utilize auctions to ensure that small, minority and women-owned businesses and rural telephone companies have an opportunity to participate in the provision of spectrum-based services. The Commission's proposals in this *Notice of Proposed Rulemaking*, if implemented, will facilitate market entry by parties who may lack the financial resources for participation in PCS auctions, including small businesses. These proposals, if implemented, will promote technological advancement and participation by diverse entities, as well as facilitate the efficient use of broadband PCS spectrum. The alternative to the Commission's proposal to allow geographic partitioning would be to maintain the status quo and only permit rural telephone companies to utilize partitioning through forming an auction bidding consortium comprised entirely of rural telephone companies or through private negotiation post-auction. Limiting geographic partitioning to rural telephone companies would not permit other small businesses to obtain partitioned licenses or to partition to other parties, and thus would not promote the participation of small businesses in the provision of PCS. The Commission also noted that the proposed partitioning policy would allow spectrum to be used more efficiently, speed service to underserved areas, and increase competition.

In this *Notice of Proposed Rulemaking*, the Commission observed that initially general partitioning by broadband PCS licensees was not permitted because of the concern that licensees might use partitioning as a means to circumvent construction requirements. The Commission tentatively concludes that both the partitioner and partitionee should be subject to coverage requirements that ensure that both portions of a partitioned licensing area will receive service. The Commission proposes facilitating partitioning by offering a choice between two different build-out options, which could be negotiated between the partitioner and partitionee. The first option proposed by the Commission would require a partitionee to satisfy the same construction

requirements as the original licensee within its partitioned area, regardless of when it acquired the partitioned license. This approach is consistent with the present construction requirements for rural telephone companies. The second option proposed by the Commission would apply where the original licensee has met its five-year build-out requirements and certifies that it will meet the ten-year coverage requirements for its entire license area. Specifically, the Commission proposes that partitionees must only satisfy the substantial service requirement for renewal expectancy for its partitioned area by the end of the original ten-year license term. The Commission tentatively concludes that these proposed flexible build-out requirements, if adopted, will encourage partitioning to entities that have a sincere interest in providing broadband PCS and will thereby expedite the provision of service to areas that otherwise may not receive it as quickly.

The Commission considered the fact that many broadband PCS licensees may meet their five-year build-out construction obligation early, and therefore proposes revisiting the current prohibition on disaggregation. The Commission considered the alternative, requiring PCS licensees to wait until January 1, 2000 before disaggregating, and noted that this would not permit small businesses to disaggregate or obtain disaggregated spectrum and therefore, would not promote an efficient use of spectrum.

The Commission is proposing to allow partitioning and/or disaggregation by entrepreneurs only to other qualified entrepreneurs for five years, to ensure the objective that entrepreneurs and small businesses continue to participate as PCS licensees for substantial periods of time, and through that participation obtain experience and profits that will enable their long term participation in communications industries. The Commission is proposing to apply proportional unjust enrichment provisions for partitioning and disaggregation by entrepreneurs to non-entrepreneurs after the five-year period. The alternative to this proposal, would be to either prohibit partitioning by entrepreneurs or to allow entrepreneurs who have benefitted from special bidding provisions to become unjustly enriched by immediately partitioning a portion of their license area to parties that do not qualify for such benefits. The Commission also noted that allowing partitioning and/or disaggregation by entrepreneurs only to other qualified entrepreneurs for five years is consistent with the Commission's rule allowing license transfers by entrepreneurs only to other entrepreneurs in the first five years of the license period.

The Commission believes that allowing entrepreneurs and small businesses to partition and/or disaggregate their licenses to other qualified entrepreneurs and small businesses, and allowing all non-entrepreneurs to partition and/or disaggregate to any qualified party (including small businesses) will help attain the Congressional objective of ensuring that small businesses have an opportunity to participate in the provision of broadband PCS. These proposals will enable a wide variety of applicants, including small businesses, to overcome entry barriers in the provision and ownership of telecommunications services.

This *Notice of Proposed Rulemaking* solicits comment on a variety of alternatives discussed herein. Any significant alternatives presented in the comments will be considered.

IRFA Comments: The Commission requests public comment on the foregoing IRFA. Comments must have a separate and distinct heading designating them as responses to the IRFA and must be filed by the comment deadlines set forth in the *Notice of Proposed Rulemaking.*

B. Paperwork Reduction Act

This *Notice of Proposed Rulemaking* contains either a proposed or modified information collection. The Commission, as part of its continuing effort to reduce paperwork burdens, invites the general public and the Office of Management and Budget (OMB) to comment on the information collections contained in this *Notice of Proposed Rulemaking,* as required by the Paperwork Reduction Act of 1995, Public Law No. 104–13. Public and agency comments are due at the same time as other comments on this *Notice of Proposed Rulemaking;* OMB notification of action is due September 23, 1996. Comments should address: (a) Whether the proposed collection of information is necessary for the proper performance of the functions of the Commission, including whether the information shall have practical utility; (b) the accuracy of the Commission's burden estimates; (c) ways to enhance the quality, utility, and clarity of the information collected; and (d) ways to minimize the burden of the collection of information on the respondents, including the use of automated collection techniques or other forms of information technology.

DATES: Written comments by the public on the proposed and/or modified information collections are due August 15, 1996. Written comments must be submitted by the Office of Management and Budget (OMB) on the proposed and/or modified information collections on or before September 23, 1996.

ADDRESSES: In addition to filing comments with the Secretary, a copy of any comments on the information collections contained herein should be submitted to Dorothy Conway, Federal Communications Commission, Room 234, 1919 M Street, N.W., Washington D.C. 20554, or via the Internet to dconway@fcc.gov, and to Timothy Fain, OMB Desk Officer, 10236 NEOB, 725–17th Street, N.W., Washington D.C. 20503 or via the Internet to fain__t@al.eop.gov.

FOR FURTHER INFORMATION CONTACT: For additional information concerning the information collections contained in this *Notice of Proposed Rulemaking* contact Dorothy Conway at (202) 418–0217, or via the Internet at dconway@fcc.gov.

SUPPLEMENTARY INFORMATION:

Title: Geographic Partitioning and Spectrum Disaggregation by Commercial Mobile Radio Services Licensees and Implementation of Section 257 of the Communications Act-Elimination of Market Entry Barriers.

Type of Review: New Collection.

Respondents: Number of Respondents: We estimate up to 10,370 PCS licensees or potential licensees could take the opportunity to partition and/or disaggregate a license or obtain a license through partitioning and/or disaggregation.

Estimated Time Per Response: The average burden on the applicant is 3 hours for the information necessary to complete FCC Forms 490, 430 or 600 and be filed as one package under cover of the FCC Form 490. We estimate 75% of respondents will contract out the burden of responding. We estimate that it will take approximately 30 minutes to coordinate information with those contractors. The remaining 25% of respondents are estimated to employ in house staff to provide the information. 7,778 applications (contracting out)×.5 hour = 3,889 hours. 2,592 applications (in house)×3 hours = 7,776 hours.

Total burden = 3,889 + 7,776 = 11,665 hours.

Estimated Cost to the Respondent: Total capital and start-up costs: Applicants wishing to file the package under cover of the FCC Form 490 electronically will incur a $2.30 per minute on-line charge. On-line time

would amount to no more than 30 minutes. Seventy-five percent of the respondents are expected to file electronically. 7,778 applications × $2.30 × = $536,682. All other respondents would be expected to file manually and would incur the following costs: 2,592 applications × $1.15 = $2,981. Total capital and start-up costs = $536,682+$2,981 = $539,663.

We assume that the respondents contracting out the information would use an attorney or engineer (average of $200 per hour) to prepare the information. 7,778 applications×$200 per hour×3 hours = $4,666,800. Total Respondent Costs: $539,663 + $4,666,800 = $5,203,463.

Cost to the Federal Government: The government review time for this submission is estimated at 15 minutes per response with the review being done by personnel at the GS–6 level. 10,370 applications × $3.39 = $35,154.

C. Ex Parte Rules—Non-Restricted Proceeding

This is a non-restricted notice and comment rulemaking proceeding. *Ex parte* presentations are permitted except during the Sunshine Agenda period, provided they are disclosed as provided in the Commission's rules, 47 CFR §§ 1.1202, 1.1203, 1.1206(a).

D. Comment Period

Pursuant to applicable procedures set forth in Sections 1.415 and 1.419 of the Commission's rules, interested parties may file comments on or before August 15, 1996. Reply comments are to be filed on or before August 30, 1996. To file formally in this proceeding, you must file an original and four copies of all comments, reply comments, and supporting comments. If you want each Commissioner to receive a personal copy of your comments, you must file an original plus nine copies. You should send comments and reply comments to Office of the Secretary, Federal Communications Commission, Washington D.C. 20554. A copy of all comments should also be filed with the Commission's copy contractor, ITS, Inc., 2100 M Street, N.W., Suite 140, (202) 857–3800.

E. Authority

The above action is authorized under the Communications Act, §§ 4(i), 303(r), 309(c), 309(j), and 332, 47 U.S.C. §§ 154(i), 303(r), 309(c), 309(j), and 332, as amended.

F. Ordering Clauses:

It is ordered that, pursuant to Sections 4(i), 303(r), 309(c), 309(j), and 332 of the Communications Act of 1934, as amended, 47 U.S.C. §§ 154(i), 303(r), 309(c), 309(j), and 332, a NOTICE OF PROPOSED RULEMAKING is hereby ADOPTED.

It is further ordered, that comments in WT Docket No. 96–148 will be due August 15, 1996 and reply comments will be due August 30, 1996.

List of Subjects in 47 CFR Part 24

Communications common carriers, Federal Communications Commission, Reporting and recordkeeping requirements.

Federal Communications Commission.

William F. Caton,

Acting Secretary.

[FR Doc. 96–18847 Filed 7–24–96; 8:45 am]

BILLING CODE 6712–01–P

DEPARTMENT OF ENERGY

48 CFR Parts 917, 950, 952 and 970

RIN 1991–AB–09

Acquisition Regulation; Department of Energy Management and Operating Contracts.

AGENCY: Department of Energy.

ACTION: Proposed rule; supplemental notice.

SUMMARY: On June 24, 1996, the Department of Energy (DOE or Department) published a notice of proposed rulemaking (61 FR 32588) (DOE–NOPR) to amend the Department of Energy Acquisition Regulation (DEAR) to incorporate certain contract reform initiatives. Among the contract reform initiatives contained in the DOE-NOPR was a proposal to amend the DEAR to address the treatment of costs which its management and operating contractors incur in proceedings involving *qui tam* actions. On June 20, 1996, the Civilian Agency Acquisition Council and the Defense Acquisition Council published a notice of proposed rulemaking (61 FR 31790) (FAR–NOPR) to amend the Federal Acquisition Regulation (FAR) to address the same issue. This notice solicits comments on whether the Department should adopt the FAR approach, instead of its originally proposed approach, in addressing legal costs incurred in connection with *qui tam* actions in which the Government does not intervene.

DATES: Written comments on the issue presented in this notice and on the DOE–NOPR must be submitted by August 23, 1996.

ADDRESSES: All comments are to be submitted to Connie P. Fournier, Office of Policy (HR–51), Department of Energy, 1000 Independence Avenue, SW., Washington, DC. 20585, (202) 586–8245; (202) 586–0545 (facsimile); connie.fournier@hq.doe.gov (Internet).

The administrative record regarding this rulemaking that is on file for public inspection, to include a copy of the transcript of the public hearing scheduled for August 1st at the Department's Independence Avenue address, and any additional public comments received, is located in the Department's Freedom of Information Reading Room, Room 1E–190, 1000 Independence Avenue, SW., Washington, DC 20585.

FOR FURTHER INFORMATION CONTACT: Connie P. Fournier, Office of Policy (HR–51), Department of Energy, 1000 Independence Avenue, SW., Washington, DC 20585, (202) 586–8245.

SUPPLEMENTARY INFORMATION: On June 24, 1996, DOE published a NOPR to amend the Department of Energy Acquisition Regulation (DEAR) to incorporate certain contract reform initiatives. Among the Department-wide contract reform initiatives contained in the DOE–NOPR was a proposal to amend DEAR 970.5204–61, Cost Prohibitions Related to Legal and Other Proceedings, to add a new paragraph (h). The proposal addresses the treatment of management and operating contractor costs incurred in proceedings involving *qui tam* actions under the False Claims Act, 31 U.S.C. 3730, alleging fraud against the Government, which are not covered by the existing provisions of that clause.

On June 20, while the Department was waiting for its own proposal to be published, the Civilian Agency Acquisition Council and the Defense Acquisition Council published a notice of proposed rulemaking that addresses the same issue. The FAR–NOPR approach would amend the cost principle at FAR 31.205–47 by amending paragraph (b), creating a new subparagraph (c)(2), and amending subparagraph (e)(3). Except for the change in existing policy contained in (e)(3), which goes beyond *qui tam* cases, the DOE–NOPR and FAR–NOPR approaches would have the same result. Both approaches would make legal costs connected with *qui tam* actions which result in a judgment against the contractor an unallowable cost, and both approaches authorize the contracting officer to make provisional or conditional reimbursement pending the outcome of a case. The only difference occurs in the event of a

settlement agreement, where the FAR–NOPR approach would only allow 80% of the contractor's costs to be reimbursed, even if the settlement agreement provides for full reimbursement.

The Department is considering switching to the FAR–NOPR approach and amending existing paragraphs in its clause, rather than creating a new stand-alone paragraph. DOE urges interested members of the public to comment on the two approaches and whether the Department should adopt the FAR approach in its final rulemaking.

Issued in Washington, DC on July 18, 1996.

Richard H. Hopf,

Deputy Assistant Secretary for Procurement and Assistance Management.

[FR Doc. 96–18774 Filed 7–24 –96; 8:45 am]

BILLING CODE 6450–01–P

DEPARTMENT OF TRANSPORTATION

Research and Special Programs Administration

49 CFR Parts 171, 173 and 180

[Docket No. HM–200; Notice No. 96–14]

RIN 2137–AB37

Hazardous Materials in Intrastate Transportation; Access to Docket During Temporary Closure of Dockets Unit

AGENCY: Research and Special Programs Administration (RSPA), DOT.

ACTION: Access to docket during temporary closure of Dockets Unit.

SUMMARY: This notice announces an alternate location for information contained in Docket HM–200 (Hazardous Materials in Intrastate Transportation) during temporary closure of RSPA's Dockets Unit.

DATES: *Written Comments:* The closing date for written comments under Notice No. 96–9 [61 FR 24904] remains August 16, 1996.

FOR FURTHER INFORMATION CONTACT: Jackie Smith or Diane LaValle, (202) 366–8553, Office of Hazardous Materials Standards, RSPA, Department of Transportation, Washington, DC 20590.

SUPPLEMENTARY INFORMATION: In an effort to improve the indoor air quality in the Nassif Building, 400 Seventh Street, SW., Washington, DC 20590, the U.S. Department of Transportation and the building's owner have initiated a major cleaning project. This project entails a thorough cleaning of the building on a floor-by-floor basis. During the cleaning of each floor, the floor will be closed to employees and visitors. It is estimated that the cleaning of each floor will take approximately three weeks. During this three-week period, the offices on each floor will be closed and the affected employees will be relocated to another building. Once the cleaning of a floor is complete, employees and visitors may return to that floor. RSPA's Dockets Unit is located on the eighth floor. Cleaning of the eighth floor is scheduled to begin on Monday, August 12, 1996 and last until September 3, 1996. As a result, RSPA's Dockets Unit is scheduled to close for approximately three weeks.

Because of the volume of materials in the Dockets Unit, it cannot be relocated during the cleaning and will be closed. However, since the comment period is open until August 16, 1996 under the supplemental notice of proposed rulemaking, extension of comment period [61 FR 24904], Docket HM–200 will be relocated and made available for review in Room 5414A of the Nassif Building, telephone (202) 366–4900. The public may view this docket between the hours of 8:30 a.m. and 5:30 p.m., Monday through Friday, except Federal holidays.

Following completion of cleaning, Docket HM–200 will be returned to the Dockets Unit in Room 8421 of the Nassif Building, 400 Seventh Street, SW., Washington, DC, 20590–0001, telephone (202) 366–5046.

Issued in Washington, DC on July 19, 1996, under the authority delegated in 49 CFR part 106, Appendix A.

Alan I. Roberts,

Associate Administrator for Hazardous Materials Safety.

[FR Doc. 96–18952 Filed 7–24–96; 8:45 am]

BILLING CODE 4910–60–P

DEPARTMENT OF THE INTERIOR

Fish and Wildlife Service

50 CFR Part 17

RIN 1018–AC22

Endangered and Threatened Wildlife and Plants; Notice of Six Month Extension on the Proposed Rule to List the Barton Springs Salamander as an Endangered Species

AGENCY: Fish and Wildlife Service, Interior.

ACTION: Proposed rule; notice of extension.

SUMMARY: The U.S. Fish and Wildlife Service (Service) gives notice that the deadline to determine whether the Barton Springs salamander (*Eurycea sosorum*) is an endangered species under the Endangered Species Act of 1973 (Act), as amended, is extended for a period not to exceed August 30, 1996.

DATES: The new deadline for final action on the proposed listing of the Barton Springs salamander as an endangered species is August 30, 1996. The public comment period on this proposed listing was closed on July 10, 1996 by virtue of an order issued on that date by the United States District Court for the Western District of Texas.

ADDRESSES: Inquiries regarding the proposed listing should be sent to the U.S. Fish and Wildlife Service, Austin Ecological Services Field Office, 10711 Burnet Road, Suite 200, Austin, Texas 78758. Comments and materials received will be available for public inspection, by appointment, during normal business hours at the above address.

FOR FURTHER INFORMATION CONTACT: Field Supervisor, U.S. Fish and Wildlife Service, Ecological Services, 10711, Burnet Road, Suite 200, Austin, Texas 78758 (512) 490–0057, facsimile (512) 490–0974.

SUPPLEMENTARY INFORMATION:

Background

The Service published a proposed rule to list the Barton Springs salamander as an endangered species on February 17, 1994 (59 FR 7968). As set forth in the proposal, the primary threat to this species is contamination of the waters that supply Barton Springs by potential catastrophic events and chronic degradation resulting from urban activities. Also of concern are disturbances to the salamander's above-ground springhead habitats (the waters in Barton Springs, Eliza Pool, and Sunken Garden Springs) and reduced groundwater supplies resulting from increased groundwater withdrawal.

The comment period on the proposed listing originally closed April 18, 1994. It was reopened May 26, 1994 and closed July 1, 1994 (59 FR 27257; May 26, 1994). On March 19, 1995, the Service published a notice extending the deadline for final action on this proposed listing for a period of up to six months and the public comment period was reopened until May 17, 1995 (60 FR 13105). The notice indicated this extension was necessary because, ''during the comment periods and subsequent to the close of comment on this proposal, the Service received recommendations and information relevant to a final decision on the listing of the salamander. In order to adequately incorporate all pertinent information in the deliberation leading

to a decision and to ensure an opportunity for public comment on as complete an administrative record as possible, the deadline for final action on this proposal is being extended and the comment period reopened'' (60 FR 13105).

In the July 10, 1996, Order of United States District Court for the Western District of Texas (''July 10 Order''), the court found that, ''the extension was not valid because an extension under the ESA can only be granted by the Secretary based on a finding that there is substantial disagreement regarding the sufficiency and accuracy of the available data upon which the listing decision is to be made.'' Specifically, the court found that the need to consider a report by the Barton Springs/Edwards Aquifer Conservation District did not justify the extension. The court found that ''Congress determined that there must be substantial scientific disagreement in order to warrant an extension * * *.'' However, the Act indicates ''substantial disagreement'' is necessary for a six month extension to be appropriate and does not specify that disagreement must be scientific. In that the inadequacy of existing regulatory mechanisms is one of the five elements which the Service must consider in determining whether to list a species, 16 U.S.C. 1533(a)(1)(D), the Service believes that substantial disagreement concerning this aspect of the listing decision constitutes a valid basis for a six month extension since data regarding that element is ''relevant to the determination * * * concerned * * *.'' 16 U.S.C. 1533(b)(6)(B)(i).

The court ordered the Secretary to make a decision whether to list the salamander as endangered, withdraw the listing, or extend the time to make a decision by no more than six months. The Secretary now finds that there exists substantial disagreement regarding the sufficiency or accuracy of the data regarding the inadequacy of existing regulatory mechanisms upon which the listing decision is to be made.

The court anticipated the possibility that the Secretary might opt for a six month extension and specified a method by which the six months should be calculated for the purposes of this listing. The court instructed the Secretary that in the event such an extension was deemed warranted, that, ''the six month period began on February 17, 1995, (the date upon which the Secretary was to make some determination) and continues until April 10, 1995 (the starting date of the moratorium—54 days). The six month period commenced again on April 26, 1996, when the President waived the budget moratorium. Therefore, the six month extension, if invoked, expires on August 30, 1996'' July 10 Order at 7. Since the Southwest Region identified processing the final determination for the Barton Springs salamander as its highest priority under the listing priority guidance (61 FR 24722; May 16, 1996), the Service intends to issue a final determination by August 30, 1996.

Section 4(b)(6)(I) of the Act indicates that the Secretary may extend the one year period following proposal for six months ''for purposes of soliciting additional data.'' The Service is unable to solicit additional data at this time since the court has ordered the comment period, which the Service reopened on June 24, 1996 (61 FR 32413), closed effective July 10, 1996, the date of its order. At the time the Service reopened the comment period, however, it justified that action by noting the need to obtain additional information on ''proposed regulatory protection under State authorities including water quality protection zones, nonpoint source pollution programs, monitoring, and Edwards Aquifer-specific actions * * *. To evaluate effectively whether the existing regulatory structure may adequately protect the species, the Service must obtain further information on these developments'' (61 FR 32414). The Service also reprinted two letters, one from the Texas Natural Resources Conservation Commission and one from Valarie Bristol, Travis County Commissioner, requesting the comment period be reopened and noting regulatory initiatives concerning which information should be gathered. In the notice reopening the comment period, the Service advised interested parties to submit any information as soon as possible because the comment period might be closed by the courts without advance notice. As described previously, the U.S. District Court for the Western District of Texas did order the comment period closed on July 10, 1996. However, during the two weeks the comment period was open, the Service received five comment letters, including comments from three Texas state regulatory agencies. Three of these comments referred specifically to the adequacy of existing regulatory mechanisms. Therefore, while the Service will not be able to seek additional information subsequent to the finding the Secretary makes today, the Service believes the public was given an opportunity to provide additional information in the very recent past. During the next several weeks, the information received during the comment period will be analyzed and the comments responded to in the final decision document, thus fulfilling the goal of the six month extension and assuring that the Service will appropriately evaluate the five factors provided in section 4 of the Act. Such consideration would not be possible if the Service were to make a final decision regarding the proposal to list the Barton Springs salamander as endangered by July 23, 1996, as required by the July 10 Order in the absence of a six month extension.

Authority

The authority for this action is the Endangered Species Act of 1973, as amended (16 U.S.C. 1531 *et seq.*).

Dated: July 18, 1996.

John G. Rogers,

Acting Director, U.S. Fish and Wildlife Service.

[FR Doc. 96–18685 Filed 7–24–96; 8:45 am]

BILLING CODE 4310–55–P

DEPARTMENT OF COMMERCE

National Oceanic and Atmospheric Administration

50 CFR Part 300

[I.D. 071296D]

International Code of Conduct for Responsible Fisheries: Draft Implementation Plan

AGENCY: National Marine Fisheries Service (NMFS), National Oceanic and Atmospheric Administration (NOAA), Commerce.

ACTION: Notice of availability; request for comments.

SUMMARY: NMFS announces the availability of the Draft Implementation Plan for the Code of Conduct for Responsible Fisheries (Code) and is requesting comments from the public. The Code was negotiated under the sponsorship of the Food and Agriculture Organization of the United Nations (FAO) as an effort to promote international understanding about the responsible conduct of fishing and related activities. The intended effect of the Implementation Plan is to assess relevant U.S. policy and practices in relation to the standards set forth in the Code and, within the responsibilities of NMFS, to present actions to meet those standards.

DATES: Comments should be submitted on or before September 23, 1996.

ADDRESSES: Comments on the Draft Implementation Plan should be submitted to Dean Swanson, Acting

Director, Office of International Affairs, NMFS, 1315 East-West Highway, Silver Spring, MD 20910. Copies of the Draft Implementation Plan are available from the NMFS Office of International Affairs.

FOR FURTHER INFORMATION CONTACT: Dean Swanson, 301–713–2276.

SUPPLEMENTARY INFORMATION: The concept of responsible fisheries was raised by the FAO in 1991 at the 19th Session of the FAO Committee on Fisheries (COFI). COFI recognized that FAO has an important role to play in promoting international understanding about the responsible conduct of fishing organizations.

In May 1992, the Government of Mexico, in consultation with FAO, organized the International Conference on Responsible Fishing, which resulted in the Cancun Declaration. The Conference requested FAO to draft the Code in consultation with other international organizations.

At its 20th session, in 1993, COFI considered the contents of the proposed code and agreed that it should contain an introductory section, including general principles, and six thematic areas or articles: Fisheries management, fishing operations, aquaculture development, integration of fisheries into coastal area management, post-harvest practices and trade, and fisheries research. The Agreement to Promote Compliance with International Conservation and Management Measures by Fish Vessels on the High Seas (the Compliance Agreement) was to form an integral part of the code.

Beginning in February 1994 and continuing through September 1995, FAO convened an informal working group of government-nominated experts, a technical consultation, and two sessions of a technical committee to elaborate the Code. In October 1995, the Code was submitted to the FAO Council and adopted by the FAO Conference in November 1995.

Although the Code is a voluntary, non-binding instrument, it addresses aspects of responsible fisheries that are included in two recently concluded international agreements: The Compliance Agreement and the Agreement for the Implementation of the Provisions of the United Nations Convention on the Law of the Sea of 10 December 1982 Relating to the Conservation and Management of Straddling Fish Stocks and Highly Migratory Fish Stocks (Straddling Stocks Agreement). The United States has signed both international agreements and deposited an instrument of acceptance for the Compliance Agreement.

The Compliance Agreement sets forth a broad range of obligations for nations that have fishing vessels operating on the high seas, including the obligation to ensure that such vessels do not undermine international fishery conservation and management measures. Such nations must also prohibit their vessels from fishing on the high seas without specific authorization and must take enforcement measures in respect to vessels that contravene requirements associated with the Compliance Agreement. The Compliance Agreement is considered to be an integral part of the Code. The United States has implemented the Compliance Agreement through the High Seas Fishing Compliance Act of 1995.

The Straddling Stocks Agreement includes an article on general principles that is similar in content and wording to the article on general principles in the Code. These issues include the precautionary approach to fisheries management; the impacts of fishing on target stocks and species belonging to the same ecosystem or associated with or dependent upon the target stocks; the minimization of pollution, waste, discards, catch by lost or abandoned gear, and the catch of non-target species; and the prevention or elimination of overfishing and excess fishing capacity. The Straddling Stocks Agreement, while generally limited to straddling stocks and highly migratory fish stocks, is applicable to fishing within national exclusive economic zones for purposes of Article 6 (application of the precautionary approach), Article 7 (compatibility of conservation and management measures) and, *mutatis mutandis*, to Article 5 (general principles).

The Draft Implementation Plan for the Code is organized as follows:

Section I. Actions to be initiated during Fiscal Year (FY) 1997–98.

Section II. Actions to be initiated after FY 98.

Section III. Standards under policy review within the U.S. Government.

Section IV. Standards that are the responsibility of a Federal Agency other than the National Marine Fisheries Service.

Appendix A. Standards that do not require the United States to initiate new action.

Appendix B. Standards that do not apply to the United States.

Authority: 16 U.S.C. 1801 *et seq.*

Dated: July 22, 1996.

Richard W. Surdi,

Acting Director, Office of Fisheries Conservation and Management, National Marine Fisheries Service.

[FR Doc. 96–18898 Filed 7–24–96; 8:45 am]

BILLING CODE 3510–22–F

Notices

Federal Register
Vol. 61, No. 144
Thursday, July 25, 1996

This section of the FEDERAL REGISTER contains documents other than rules or proposed rules that are applicable to the public. Notices of hearings and investigations, committee meetings, agency decisions and rulings, delegations of authority, filing of petitions and applications and agency statements of organization and functions are examples of documents appearing in this section.

DEPARTMENT OF AGRICULTURE

Foreign Agricultural Service

Assessment of Fees for Dairy Import Licenses

AGENCY: Foreign Agricultural Service, USDA.

ACTION: Notice of the fee for dairy import licenses for the 1997 quota year.

SUMMARY: This notice announces that the fee to be charged for the 1997 quota year for each license issued to a person or firm by the Department of Agriculture authorizing the importation of certain dairy articles which are subject to tariff-rate quotas set forth in the Harmonized Tariff Schedule of the United States (HTS) will be $103.00 per license.

EFFECTIVE DATE: January 1, 1997.

FOR FURTHER INFORMATION CONTACT: Richard P. Warsack, Dairy Import Quota Manager, Import Policies and Programs Division, STOP 1021, U.S. Department of Agriculture, 1400 Independence Avenue, S.W., Washington, D.C. 20250–1021 or telephone at (202) 720–9439.

SUPPLEMENTARY INFORMATION: Regulations promulgated by the Department of Agriculture and codified at 7 CFR 6.20–6.34 provide for the issuance of licenses to importers of certain dairy articles which are subject to tariff-rate quotas set forth in the Harmonized Tariff Schedule of the United States (HTS). Those dairy articles may only be entered into the United States by or for the account of a person or firm to whom such licenses have been issued and only in accordance with the terms and conditions of such licenses and the regulations.

The licenses are issued on a calendar year basis, and each license authorizes the license holder to import a specified quantity and type of dairy article from a specified country. The use of licenses by the license holder to import dairy articles is monitored by the Dairy Import Quota Manager, Import Licensing Group, Import Policies and Programs Division, Foreign Agricultural Service, U.S. Department of Agriculture (the ''Licensing Authority'') and the U.S. Customs Service.

Regulations at 7 CFR 6.33(a) provide that a fee will be charged for each license issued to a person or firm by the Licensing Authority in order to reimburse the Department of Agriculture for the costs of administering the licensing system under this regulation. The fee is to be based upon the total cost to the Department of Agriculture of administering the licensing system during the calendar year preceding the year for which the fee is to be charged, divided by the average number of licenses issued per year for the three years preceding the year for which the fee is to be assessed.

Regulations at 7 CFR 6.33(b) provide that the Licensing Authority will announce the annual fee for each license and that such fee will be set out in a notice to be published in the Federal Register. Accordingly, this notice sets out the fee for the licenses to be issued for the 1997 calendar year.

Notice

The total cost to the Department of Agriculture of administering the licensing system during 1996 has been determined to be $382,225. Of this amount, $236,201 represents the cost of the staff and supervisory hours devoted directly to administering the licensing system during 1996 (total personnel costs for the Import Licensing Group of the Foreign Agricultural Service equaled $141,701; a proportionate share of the supervisory costs devoted directly to administering the licensing system equaled $94,500); $53,320 represents the total computer costs to monitor and issue import licenses during 1996; and $92,704 represents other miscellaneous costs, including travel, postage, publications, forms, and an ADP system contractor.

The average number of licenses issued per year for the three years immediately preceding 1997 has been determined to be 3,710. Accordingly, notice is hereby given that the fee for each license issued to a person or firm for the 1997 calendar year, in accordance with 7 CFR 6.33, will be $103.00 per license.

Issued at Washington, D.C. the 19th day of July, 1996.

Richard P. Warsack,

Licensing Authority.

[FR Doc. 96–18877 Filed 7–24–96; 8:45 am]

BILLING CODE 3410–10–M

Forest Service

Lost Trail Powder Mountain Ski Area Expansion; Bitterroot National Forest, Ravalli County, Montana

AGENCY: Forest Service, USDA.

ACTION: Notice; intent to prepare environmental impact statement.

SUMMARY: The USDA Forest Service will prepare an environmental impact statement (EIS) to disclose the environmental effects of expansion of Lost Trail Powder Mountain ski area, including construction of a new ski lodge, a new warming hut facility, two new chair lifts, one surface tow, and several ski runs in the vicinity of Lost Trail Pass. A site specific amendment to the Bitterroot Forest Plan (1987) to change the management area designation for the expansion area is also proposed. The area is located adjacent to the existing ski area facilities near the southern edge of the Bitterroot National Forest, Sula Ranger District, Ravalli County, Montana.

The proposal's actions to construct two short sections of road, a new ski lodge, a new warming hut facility, two chair lifts, a surface tow, and clear ski runs are being considered together because they represent either connected or cumulative actions as defined by the Council on Environmental Quality (40 CFR 1508.25). The purposes of the project are to enhance skiing opportunities on the Bitterroot National Forest, provide an affordable family skiing area for the foreseeable future, and contribute to the diversification of the local economies. This project level EIS will tier to the Bitterroot National Forest Land and Resource Management Plan (Forest Plan) and Final EIS (September 1987), which provides overall guidance of land management activities on the Bitterroot National Forest, including recreation management.

DATES: Written comments and suggestions should be received on or before September 9, 1996.

ADDRESSES: Submit written comments and suggestions on the proposed management activities or request to be placed on the project mailing list to Dave Campbell, District Ranger, Sula Ranger District, Bitterroot National Forest 7338 Hwy. 93 South, Sula, MT 59871.

FOR FURTHER INFORMATION CONTACT: Gina Owens, EIS Team Leader, Sula Ranger District, Bitterroot National Forest, Phone (406) 821–3201.

SUPPLEMENTARY INFORMATION: Skiing at Lost Trail Pass has been ongoing since 1935 with uphill transportation in the early years provided by a rope tow and walking. Improvements since that time have led to the current level of development which includes two chair lifts, two rope tows, 28 ski runs, a ski lodge, and several outbuildings for storage, power generation, and the ski patrol. The area has a large parking lot and the double lane entrance road is scheduled to be paved in 1997.

The project area is north of the existing ski area and consists of approximately 600 acres of National Forest land located in Section 4, T.2N., R.19W. and Sections 32 and 33T.1N, R.19W. This area is primarily located in an area burned by wildfire in 1960 and is commonly referred to as the ''Saddle Mountain Burn.'' The majority of the area is covered with 30 year old lodgepole pine with some areas having very little vegetative recovery. No activities are proposed within the Allen Mountain Roadless Area, however the proposed activities would occur on lands adjacent to this Roadless area. Expansion of ski area facilities would require construction of approximately 0.25 mile of road, reconstruction of approximately 0.5 mile of road, and clearing of approximately 230 acres of forested land. A new ski lodge would be constructed near the existing parking area and a warming hut facility would be located at the base of the two new chair lifts. One of the ski lifts would be developed near Camp Creek and one ski lift would be located within the Saddle Mountain burn. Ski runs would be cleared adjacent to both lifts, with most runs located within the Saddle Mountain burn.

This proposal has been developed by Lost Trail Pass, Inc. to respond to the population growth occurring in western Montana. Ravalli Country (Bitterroot Valley) leads the state of Montana in population growth, and the population is expected to continue to grow for the foreseeable future.

The decision to be made is whether the Forest Service should allow the proponent to expand the existing ski area as described above, add approximately 600 acres to the ski area's permit area, and amend the Bitterroot Forest Plan by reallocating the proposed expansion area from Management Area 3A (visual quality emphasis) and Management Area 5 (semi-primitive recreation emphasis) to Management Area 10 (developed recreation sites).

The Bitterroot Forest Plan provides guidance for management activities within the potentially affected area through its goals, objectives, standards and guidelines, and management area direction. The areas of proposed ski area expansion activities would occur within Management Areas 3A, 3B, and 5. Road construction would occur in management area 3A and 3B when crossing streams.

Approximately 470 acres of Management Area 3a and 460 acres of Management Area 5 are proposed for redesignation as Management Area 10. This redesignation would be accomplished by a site specific amendment to the Bitterroot Forest Plan.

Here are brief descriptions of the applicable management area direction.

Management Area 3A: These areas are comprised of visually sensitive foreground and middle ground viewing areas along U.S. Highway 93 and other major road corridors. Lands within this management area may be managed for a variety of activities so long as the partial retention visual quality objective is maintained. The goal for lands within this management area is to maintain the partial retention visual quality objective while managing timber. Emphasis is placed on roaded dispersed recreation activities, old growth, and big-game cover.

Management Area 3B: These areas are comprised of riparian habitat and includes 100 feet on either side of small streams or the area defined by water influenced vegetation, whichever is greater. The goal of this management area is to manage riparian areas to maintain flora, fauna, water quality and water-related recreation activities. Emphasis is on water and soil protection, dispersed recreation use, visual quality, and old growth.

Management Area 5: This area is comprised of semi-primitive recreation and elk security areas. The semi-primitive recreation areas include the inventoried roadless acres and some adjacent roaded lands. Goals for this management area are to emphasize motorized and non-motorized semi-primitive recreation activities and elk security. Management of the Saddle Mountain road corridor is to provide for recreation access.

Management Area 10: This area is comprised of developed recreation sites (including the ski area) on the Forest. The goal of this management area is to provide developed recreation facilities which are not provided by the private sector. A standard for this management area is to ''provide for the expansion of the Lost Trail Ski Area.''

The Forest will consider a range of alternatives. One of these will be the no action alternative, in which none of the activities would be implemented. Additional alternatives will examine varying levels and locations for the proposed activities to achieve the proposal's purposes, as well as to respond to the issues and other resource values.

The EIS will analyze the direct, indirect, and cumulative environmental effects of the alternatives. Past, present, and projected activities on National Forest lands will be considered. The EIS will disclose the analysis of site-specific mitigation measures and their effectiveness.

Public participation is an important part of the analysis, commencing with the initial scoping process (40 CFR 1501.7), which will occur July 1996 through August 1996. In addition, the public is encouraged to visit with Forest Service officials at any time during the analysis and prior to the decision. The Forest Service will be seeking information, comments, and assistance from Federal, State, and local agencies and other individuals or organizations who may be interested in or affected by the proposed action.

Comments from the public and other agencies will be used in preparation of the Draft EIS. The scoping process will be used to:

1. Identify potential issues.
2. Identify major issues to be analyzed in depth.
3. Eliminate minor issues or those which have been covered by relevant previous environmental analysis, such as the Bitterroot Forest Plan EIS
4. Identify alternatives to the proposed action.
5. Identify potential environmental effects of the proposed action and alternatives (i.e., direct, indirect, and cumulative effects).
6. Determine potential cooperating agencies and task assignments.

Some public comments have already been received in conjunction with the Camp-Reimel Integrated Resource Analysis and a proponent sponsored survey conducted during the winter of 1995–1996. The following preliminary issues have been identified.

1. How will the proposal affect visual quality along the U.S. Hwy. 93 corridor?

2. How will the proposed action affect the Allen Mountain Roadless Area and lands adjacent to the roadless area?

3. How will the proposed action affect wildlife?

4. How will the proposed action affect water quality and quantity within the Camp Creek drainage?

5. Will the proposed expansion impact the Lost Trail Pass fen (bog)?

6. Will the proposal affect the nature and character of the recreation opportunity currently provided at Lost Trail Pass?

7. What are the cumulative impacts of all activities proposed at Lost Trail Pass including a State operated rest area and a snowmobile parking area?

Other issues commonly associated with ski area development are effects on cultural resources, sensitive species, soils, and the local communities. This list may be verified, expanded, or modified based on public scoping for this proposal.

The Draft EIS is expected to be filed with the Environmental Protection Agency (EPA) and available for public review in April 1997. At that time, the EPA will publish a notice of availability of the Draft EIS in the Federal Register. The comment period on the Draft EIS will be 45 days from the date the EPA's notice of availability appears in the Federal Register. It is very important that those interested in expansion of the Lost Trail Pass Ski Area participate at that time. To be most helpful, comments on the Draft EIS should be as site-specific as possible. The Final EIS is scheduled to be completed in November 1997.

The Forest Service believes, at this early stage, it is important to give reviewers notice of several court rulings related to public participation in the environmental review process. First, reviewers of draft environmental impact statements must structure their participation in the environmental review of the proposal so that it is meaningful and alerts an agency to the reviewer's position and contentions. *Vermont Yankee Nuclear Power Corp* v. *NRDC* 435 U.S. 519, 553 (1978). Also, environmental objections that could be raised at the draft environmental impact statement stage but that are not raised until after completion of the final environmental impact statement may be waived or dismissed by the courts. *City of Angoon* v. *Hodel*, 803 F.2d 1016, 1022 (9th Cir. 1986) and *Wisconsin Heritages, Inc.* v. *Harris*, 490 F. Supp. 1334, 1338 (E.D. Wis 1980). Because of these court rulings, it is very important that those interested in this proposed action participate by the close of the 45-day scoping comment period so that substantive comments and objections are made available to the Forest Service at a time when it can meaningfully consider them and respond to them in developing issues and alternatives.

To assist the Forest Service in identifying and considering issues on the proposed action, comments should be as specific as possible. Reviewers may wish to refer to the Counsel on Environmental Quality Regulations for implementing the procedural provisions of the National Environmental Policy Act at 40 CFR 1503.3 in addressing these points.

I am the responsible official for this environmental impact statement. My address is Bitterroot National Forest, 1801 N First, Hamilton, Montana 59840.

Dated: July 18, 1996.

Stephen K. Kelly,

Forest Supervisor.

[FR Doc. 96–18916 Filed 7–24–96; 8:45 am]

BILLING CODE 3410–11–M

Lost Trail Powder Mountain Ski Area Expansion; Bitterroot National Forest, Ravalli County, Montana

AGENCY: Forest Service, USDA.

ACTION: Notice; intent to prepare environmental impact statement.

SUMMARY: The USDA Forest Service will prepare an environmental impact statement (EIS) to disclose the environmental effects of expansion of Lost Trail Powder Mountain ski area, including construction of a new ski lodge, a new warming hut facility, two new chair lifts, one surface tow, and several ski runs in the vicinity of Lost Trail Pass. A site specific amendment to the Bitterroot Forest Plan (1987) to change the management area designation for the expansion area is also proposed. The area is located adjacent to the existing ski area facilities near the southern edge of the Bitterroot National Forest, Sula Ranger District, Ravalli County, Montana.

The proposal's actions to construct two short sections of road, a new ski lodge, a new warming hut facility, two chair lifts, a surface tow, and clear ski runs are being considered together because they represent either connected or cumulative actions as defined by the Council on Environmental Quality (40 CFR 1508.25). The purposes of the project are to enhance skiing opportunities on the Bitterroot National Forest, provide an affordable family skiing area for the foreseeable future, and contribute to the diversification of the local economics. This project level EIS will tier to the Bitterroot National Forest Land and Resource Management Plan (Forest Plan) and Final EIS (September 1987), which provides overall guidance of land management activities on the Bitterroot National Forest, including recreation management.

DATES: Written comments and suggestions should be received by no later than September 9, 1996.

ADDRESSES: Submit written comments and suggestions on the proposed management activities or request to be placed on the project mailing list to Dave Campbell, District Ranger, Sula Ranger District, Bitterroot National Forest 7338 Hwy. 93 South, Sula, MT 59871.

FOR FURTHER INFORMATION CONTACT: Gina Owens, EIS Team Leader, Sula Ranger District, Bitterroot National Forest, Phone (406) 821–3201.

SUPPLEMENTARY INFORMATION: Skiing at Lost Trail Pass has been ongoing since 1935 with uphill transportation in the early years provided by a rope tow and walking. Improvements since that time have led to the current level of development which includes two chair lifts, two rope tows, 28 ski runs, a ski lodge, and several outbuildings for storage, power generation, and the ski patrol. The area has a large parking lot and the double lane entrance road is scheduled to be paved in 1997.

The project area is north of the existing ski area and consists of approximately 600 acres of National Forest land located in Section 4, T. 2N., R. 19W. and Sections 32 and 33 T.1N,R. 19W. This area is primarily located in an area burned by wildfire in 1960 and is commonly referred to as the ''Saddle Mountain Burn.'' The majority of the area is covered with 30 year old lodgepole pine with some areas having very little vegetative recovery. No activities are proposed within the Allen Mountain Roadless Area, however the proposed activities would occur on lands adjacent to this Roadless area. Expansion of ski area facilities would require construction of approximately 0.25 mile of road, reconstruction of approximately 0.5 mile of road, and clearing of approximately 230 acres of forested land. A new ski lodge would be constructed near the existing parking area and a warming hut facility would be located at the based of the two new chair lifts. One of the ski lifts would be developed near Camp Creek and one ski lift would be located within the Saddle Mountain Burn. Ski runs would be cleared adjacent to both lifts, with most runs located within the Saddle Mountain Burn.

This proposal has been developed by Lost Trail Pass, Inc. to respond to the

population growth occurring in western Montana. Ravalli County (Bitterroot Valley) leads the state of Montana in populations growth, and the population is expected to continue to grow for the foreseeable future.

The decision to be made is whether the Forest Service should allow the proponent to expand the existing ski area as described above, add approximately 600 acres to the ski area's permit area, and amend the Bitterroot Forest Plan by reallocating the proposed expansion area from Management Area 3A (visual quality emphasis) and Management Area 5 (semi-primitive recreation emphasis) to Management Area 10 (developed recreation sites).

The Bitterroot Forest Plan provides guidance for management activities within the potentially affected area through its goals, objectives, standards and guidelines, and management area direction. The areas of proposed ski area expansion activities would occur within Management Areas 3A, 3B, and 5. Road construction would occur in management area 3A and 3B when crossing streams.

Approximately 470 acres of Management Area 3a and 460 acres of Management Area 5 are proposed for redesignation as Management Area 10. This redesignation would be accomplished by a site specific amendment to the Bitterroot Forest Plan.

Here are brief descriptions of the applicable management area direction.

Management Area 3A: These areas are comprised of visually sensitive foreground and middle ground viewing areas along U.S. Highway 93 and other major road corridors. Lands within this management area may be managed for a variety of activities so long as the partial retention visual quality objective is maintained. The goal for lands within this management area is to maintain the partial retention visual quality objective while managing timber. Emphasis is placed on roaded dispersed recreation activities, old growth, and big-game cover.

Management Area 3B: The areas are comprised of riparian habitat and includes 100 feet on either side of small streams or the area defined by water influenced vegetation, whichever is greater. The goal of this management area is to manage riparian areas to maintain flora, fauna, water quality and water-related recreation activities. Emphasis is on water and soil protection, dispersed recreation use, visual quality, and old growth.

Management Area 5: This area is comprised of semi-primitive recreation and elk security areas. The semi-primitive recreation areas include the inventoried roadless acres and some adjacent roaded lands. Goals for this management area are to emphasize motorized and non-motorized semi-primitive recreation activities and elk security. Management of the Saddle Mountain road corridor is to provide for recreation access.

Management Area 10: This area is comprised of developed recreation sites (including the ski area) on the Forest. The goal of this management area is to provide developed recreation facilities which are not provided by the private sector. A standard for this management area is to ''provide for the expansion of the Lost Trail Ski Area.''

The Forest will consider a range of alternatives. One of these will be the no action alternative, in which none of the activities would be implemented. Additional alternatives will examine varying levels and locations for the proposed activities to achieve the proposal's purposes, as well as to respond to the issues and other resource values.

The EIS will analyze the direct, indirect, and cumulative environmental effects of the alternatives. Past, present, and projected activities on National Forests lands will be considered. The EIS will disclose the analysis of site-specific mitigation measures and their effectiveness.

Public participation is an important part of the analysis, commencing with the initial scoping process (40 CFR 1501.7), which will occur July 1996 through August 1996. In addition, the public is encouraged to visit with Forest Service officials at any time during the analysis and prior to the decision. The Forest Service will be seeking information, comments, and assistance from Federal, State, and local agencies and other individuals or organizations who may be interested in or affected by the proposed action. Public meetings are scheduled as follows:

Location	City, State	Date and time
Community Building	Wisdom, Montana	July 16, 1996—3 pm–8 pm.
Salmon NF Headquarters	Salmon, Idaho	July 17, 1996—1 pm–6:30 pm.
Bitterroot NF Headquarters	Hamilton, Montana	July 18, 1996—3 pm–8 pm.
Sula Community Clubhouse	Sula, Montana	July 19, 1996—1 pm–6 pm.

A public field trip is scheduled for July 20, 1996. The trip will begin at 0900 at the Lost Trail Ski Area Parking lot.

Comments from the public and other agencies will be used in preparation of the Draft EIS. The scoping process will be used to:

1. Identify potential issues.

2. Identify major issues to be analyzed in depth.

3. Eliminate minor issues or those which have been covered by relevant previous environmental analysis, such as the Bitterroot Forest Plan EIS

4. Identify alternatives to the proposed action.

5. Identify potential environmental effects of the proposed action and alternatives (i.e. direct, indirect, and cumulative effects).

6. Determine potential cooperating agencies and task assignments.

Some public comments have already been received in conjunction with the Camp-Reimel Integrated Resource Analysis and a proponent sponsored survey conducted during the winter of 1995–1996. The following preliminary issues have been identified:

1. How will the proposal affect visual quality along the U.S. Hwy. 93 corridor?

2. How will the proposed action affect the Allen Mountain Roadless Area and lands adjacent to the roadless area?

3. How will the proposed action affect wildlife?

4. How will the proposed action affect water quality and quantity within the Camp Creek drainage?

5. Will the proposed expansion impact the Lost Trail Pass fen (bog)?

6. Will the proposal affect the nature and character of the recreation opportunity currently provided at Lost Trail Pass?

7. What are the cumulative impacts of all activities proposed at Lost Trail Pass including a State operated rest area and a snowmobile parking area?

Other issues commonly associated with ski area development are effects on cultural resources, sensitive species,

soils, and the local communities. This list may be verified, expanded, or modified based on public scoping for this proposal.

The Draft EIS is expected to be filed with the Environmental Protection Agency (EPA) and available for public review in April 1997. At that time, the EPA will publish a notice of availability of the Draft EIS in the Federal Register. The comment period on the Draft EIS will be 45 days from the date the EPA's notice of availability appears in the Federal Register. It is very important that those interested in expansion of the Lost Trail Pass Ski Area participate at that time. To be most helpful, comments on the Draft EIS should be as site-specific as possible. The Final EIS is scheduled to be completed in November 1997.

The Forest Service believes, at this early stage, it is important to give reviewers notice of several court rulings related to public participation in the environmental review process. First, reviewers of draft environmental impact statements must structure their participation in the environmental review of the proposal so that it is meaningful and alerts an agency to the reviewer's position and contentions. *Vermont Yankee Nuclear Power Corp. v. NRDC 435 U.S. 519,553 (1978).* Also, environmental objections that could be raised at the draft environmental impact statement stage but that are not raised until after completion of the final environmental impact statement may be waived or dismissed by the courts. *City of Angoon v. Hodel,* 803 F.2d 1016, 1022 (9th Cir. 1986) and *Wisconsin Heritages, Inc. v. Harris,* 490 F. Supp. 1334, 1338 (E.D. Wis 1980). Because of these court rulings, it is very important that those interested in this proposed action participate by the close of the 45-day scoping comment period so that substantive comments and objections are made available to the Forest Service at a time when it can meaningfully consider them and respond to them in developing issues and alternatives.

To assist the Forest Service in identifying and considering issues on the proposed action, comments should be as specific as possible. Reviewers may wish to refer to the Counsel on Environmental Quality Regulations for implementing the procedural provisions of the National Environmental Policy Act at 40 CFR 1503.3 in addressing these points.

I am the responsible official for this environmental impact statement. My address is Bitterroot National Forest, 1801 N First, Hamilton, Montana 59840.

Dated: July 3, 1996.

Stephen K. Kelly,

Forest Supervisor.

[FR Doc. 96–18883 Filed 7–24–96; 8:45 am]

BILLING CODE 3410–11–M

Solitude Ski Resort Master Development Plan Update, Wasatch-Cache National Forest, Salt Lake Ranger District, Salt Lake County, Utah

AGENCY: Forest Service, USDA.

ACTION: Notice of intent to prepare an environmental impact statement (EIS).

SUMMARY: The Salt Lake Ranger District, of the Uinta and Wasatch-Cache National Forests, will prepare an EIS on Solitude Ski Resort's (Solitude) proposal to update their Master Development Plan.

DATES: Comments concerning the scope of the analysis should be received in writing by August 23, 1996.

ADDRESSES: Send written comments to Michael Sieg, District Ranger, 6944 South 3000 East, Salt Lake City, Utah 84121.

FOR FURTHER INFORMATION CONTACT: Steve Scheid, Environmental Analyst, (801) 943–9483.

SUPPLEMENTARY INFORMATION: Solitude in proposing to update its Master Development Plan. Solitude's proposal, if approved, would require Forest Plan amendments to allow an increase in permit area boundary and parking capacity on National Forest System lands.

Solitude proposes to improve their base facilities by replacing their outdated Main and Eagle Express lodges with two new buildings, which will house ski operations, skier services (restrooms, food service, day care, ski school and ski patrol) and a connected Salt Lake County Fire Station. They also propose to construct an addition to the existing Moonbeam Center day lodge to help alleviate overcrowded conditions.

Solitude's proposed base area projects include the following: a landing pad for rescue helicopters, recreational vehicle hookups, expanding Moonbeam parking lot, upgrading base transportation and visitor circulation systems, a satellite and communications base station, and upgrading the snowmaking system (stream diversion points, a pump house and dredging Lake Solitude) to provide snowmaking capacity for 250 acres.

Solitude is also proposing to upgrade its lift system by constructing two new double chairlifts and upgrading an existing lift to a high-speed detachable quad. They are also proposing numerous improvements to their trail system and a new trail near the Sunrise lift. Solitude is also proposing summertime recreation use improvements by upgrading its mountain bike trail system, constructing an alpine slide and building two regulation-size tennis courts.

Additional information on the proposed actions is available through the Salt Lake Ranger District office. Before any decision is made on this proposal, Solitude must obtain the following: a water change application from the Utah Department of Natural Resources, Division of Water Rights, State Engineer; all applicable building permits from Salt Lake County; a 404 permit from the Army Corps of Engineers; and consultation with the Environmental Protection Agency.

A scoping document, dated August 4, 1995, was sent to more than 540 individuals, organizations, and local and state government agencies. Preliminary issues identified by a Forest Service interdisciplinary team include effects on riparian and wetland areas, visual quality, transportation, parking, wildlife and vegetation, soil erosion, and water quality and quantity in a culinary watershed. Two preliminary alternatives have been identified. The proposed action alternative would permit Solitude to implement all of its proposed upgrades and may require Solitude to convert to a new Ski Area Term Special Use Permit. The no action alternative would permit use as it presently exists with no new improvements.

The public is invited to submit comments or suggestions to the address above. The responsible official is Bernie Weingardt, Forest Supervisor. A Draft EIS is expected to be filed in August of 1997 and the final EIS filed in November of 1997.

The comment period on the draft EIS will be 45 days from the date the Environmental Protection Agency's notice of availability appears in the Federal Register. It is very important that those interested in this proposed action participate during that time. To be most helpful, comments on the draft EIS should be as specific as possible and may address the adequacy of the statement or the merits of the alternatives discussed (see The Council on Environmental Quality Regulations for implementing the procedural provisions of the National Environmental Policy Act at 40 CFR 1503.3).

In addition, Federal court decisions have established that the reviewers of the draft EIS must structure their participation in the environmental review of the proposal so that it is

meaningful and alerts an agency to the reviewer's position and contentions. Vermont Yankee Nuclear Power Corp. v. NRDC, 435 U.S. 519, 553 (1978). Environmental objections that could have been raised at the draft stage may be waived if not raised until after completion of the final EIS. City of Angoon v. Hodel, (9th Circuit, 1986), and Wisconsin Heritages, Inc. v. Harris, 490 F. Supp. 1334, 1338 (E.D. Wis. 1980). The reason for this is to ensure that substantive comments and objections are made available to the Forest Service at a time when it can meaningfully consider them and respond to them in the final EIS.

Dated: July 18, 1996.

Steven W. Scheid,

District Environmental Analyst.

[FR Doc. 96–18876 Filed 7–24–96; 8:45 am]

BILLING CODE 3410–11–M

Intergovernmental Advisory Committee Subcommittee Meeting

AGENCY: Forest Service, USDA.

ACTION: Notice of meeting.

SUMMARY: The Intergovernmental Advisory Committee will meet on August 7, 1996, at the Robert Duncan Plaza Building, 333 SW First Ave., Portland, Oregon 97208 in the Regional Forester's conference room on the 6th floor. The purpose of the meeting is to continue discussions to identify issues and solutions to improve the implementation of the Northwest Forest Plan (NFP) and in particular to focus on better ways to integrate the ecological and economic aspects of the NFP. The meeting will begin at 9:00 a.m. and continue until 5:00 p.m. Agenda items to be discussed include, but are not limited to: (1) issues which impede the efficient implementation of the NFP, (2) recommendations to resolve the issues, and (3) identification of procedures to implement recommendations. The IAC meeting will be open to the public and is fully accessible for people with disabilities. Interpreters are available upon request in advance. Written comments may be submitted for the record at the meeting. Time will also be scheduled for oral public comments. Interested persons are encouraged to attend.

FOR FURTHER INFORMATION CONTACT: Questions regarding this meeting may be directed to Don Knowles, Executive Director, Regional Ecosystem Office, 333 SW 1st Avenue, P.O. Box 3623, Portland, OR 97208 (Phone: 503–326–6265).

Dated: July 12, 1996.

Donald R. Knowles,

Designated Federal Official.

[FR Doc. 96–18948 Filed 7–24–96; 8:45 am]

BILLING CODE 3410–11–M

DEPARTMENT OF COMMERCE

Foreign-Trade Zones Board

[Order No. 839]

Grant of Authority for Subzone Status; Shell Oil Company (Oil Refinery), St. Charles Parish, Louisiana

Pursuant to its authority under the Foreign-Trade Zones Act of June 18, 1934, as amended (19 U.S.C. 81a–81u), the Foreign-Trade Zones Board (the Board) adopts the following Order:

Whereas, by an Act of Congress approved June 18, 1934, an Act ''To provide for the establishment * * * of foreign-trade zones in ports of entry of the United States, to expedite and encourage foreign commerce, and for other purposes,'' as amended (19 U.S.C. 81a–81u) (the Act), the Foreign-Trade Zones Board (the Board) is authorized to grant to qualified corporations the privilege of establishing foreign-trade zones in or adjacent to U.S. Customs ports of entry;

Whereas, the Board's regulations (15 CFR Part 400) provide for the establishment of special-purpose subzones when existing zone facilities cannot serve the specific use involved;

Whereas, an application from the South Louisiana Port Commission, grantee of Foreign-Trade Zone 124, for authority to establish special-purpose subzone status at the oil refinery/petrochemical complex of Shell Oil Company located at sites in St. Charles Parish, Louisiana, was filed by the Board on January 18, 1996, and notice inviting public comment was given in the Federal Register (FTZ Docket 4–96, 61 FR 2486, 1–26–96); and,

Whereas, the Board adopts the findings and recommendations of the examiner's report, and finds that the requirements of the FTZ Act and Board's regulations would be satisfied, and that approval of the application would be in the public interest if approval is subject to the conditions listed below;

Now, therefore, the Board hereby authorizes the establishment of a subzone (Subzone 124F) at the oil refinery/petrochemical complex of Shell Oil Company, at sites in St. Charles Parish, Louisiana, in the locations described in the application, subject to the FTZ Act and the Board's regulations, including § 400.28, and subject to the following conditions:

1. Foreign status (19 CFR §§ 146.41, 146.42) products consumed as fuel for the refinery shall be subject to the applicable duty rate.

2. Privileged foreign status (19 CFR § 146.41) shall be elected on all foreign merchandise admitted to the subzone, except that non-privileged foreign (NPF) status (19 CFR § 146.42) may be elected on refinery inputs covered under HTSUS Subheadings # 2709.00.1000–# 2710.00.1050 and # 2710.00.2500 which are used in the production of:

—Petrochemical feedstocks and refinery by-products (examiners report, Appendix D);
—Products for export; and,
—Products eligible for entry under HTSUS #9808.00.30 and 9808.00.40 (U.S. Government purchases).

3. The authority with regard to the NPF option is initially granted until September 30, 2000, subject to extension.

Signed at Washington, DC, this 16th day of July 1996.

Robert S. LaRussa,

Acting Assistant Secretary of Commerce for Import Administration, Alternate Chairman, Foreign-Trade Zones Board.

Attest:

John J. Da Ponte, Jr.,

Executive Secretary.

[FR Doc. 96–18940 Filed 7–24–96; 8:45 am]

BILLING CODE 3510–DS–P

[Order No. 838]

Grant of Authority for Subzone Status; Sun Company Inc. (Oil Refinery), Philadelphia, Pennsylvania, Area

Pursuant to its authority under the Foreign-Trade Zones Act of June 18, 1934, as amended (19 U.S.C. 81a–81u), the Foreign-Trade Zones Board (the Board) adopts the following Order:

Whereas, by an Act of Congress approved June 18, 1934, an Act ''To provide for the establishment * * * of foreign-trade zones in ports of entry of the United States, to expedite and encourage foreign commerce, and for other purposes,'' as amended (19 U.S.C. 81a–81u) (the Act), the Foreign-Trade Zones Board (the Board) is authorized to grant to qualified corporations the privilege of establishing foreign-trade zones in or adjacent to U.S. Customs ports of entry;

Whereas, the Board's regulations (15 CFR Part 400) provide for the establishment of special-purpose subzones when existing zone facilities cannot serve the specific use involved;

Whereas, an application from the Philadelphia Regional Port Authority, grantee of Foreign-Trade Zone 35, for authority to establish special-purpose subzone status at the oil refinery complex of Sun Company Inc., at sites in the Philadelphia, Pennsylvania, area, was filed by the Board on January 11, 1996, and notice inviting public comment was given in the Federal Register (FTZ Docket 1–96, 61 FR 1747, 1–23–96); and,

Whereas, the Board adopts the findings and recommendations of the examiner's report, and finds that the requirements of the FTZ Act and Board's regulations would be satisfied, and that approval of the application would be in the public interest if approval is subject to the conditions listed below;

Now, therefore, the Board hereby authorizes the establishment of a subzone (Subzone 35C) at the oil refinery complex of Sun Company Inc., at sites in the Philadelphia, Pennsylvania, area, at the locations described in the application, subject to the FTZ Act and the Board's regulations, including § 400.28, and subject to the following conditions:

1. Foreign status (19 CFR §§ 146.41, 146.42) products consumed as fuel for the refinery shall be subject to the applicable duty rate.

2. Privileged foreign status (19 CFR § 146.41) shall be elected on all foreign merchandise admitted to the subzone, except that non-privileged foreign (NPF) status (19 CFR § 146.42) may be elected on refinery inputs covered under HTSUS Subheadings #2709.00.1000–#2710.00.1050 and #2710.00.2500 which are used in the production of:

—Petrochemical feedstocks and refinery by-products (examiners report, Appendix D);
—Products for export; and,
—Products eligible for entry under HTSUS #9808.00.30 and 9808.00.40 (U.S. Government purchases).

3. The authority with regard to the NPF option is initially granted until September 30, 2000, subject to extension.

Signed at Washington, DC, this 16th day of July 1996.

Robert S. LaRussa,

Acting Assistant Secretary of Commerce for Import Administration, Alternate Chairman, Foreign-Trade Zones Board.

Attest:

John J. Da Ponte, Jr.,

Executive Secretary.

[FR Doc. 96–18939 Filed 7–24–96; 8:45 am]

BILLING CODE 3510–DS–P

[Order No. 837]

Grant of Authority for Subzone Status; Exxon Corporation (Oil Refinery), Harris County, Texas

Pursuant to its authority under the Foreign-Trade Zones Act of June 18, 1934, as amended (19 U.S.C. 81a-81u), the Foreign-Trade Zones Board (the Board) adopts the following Order:

Whereas, by an Act of Congress approved June 18, 1934, an Act ''To provide for the establishment * * * of foreign-trade zones in ports of entry of the United States, to expedite and encourage foreign commerce, and for other purposes,'' as amended (19 U.S.C. 81a-81u) (the Act), the Foreign-Trade Zones Board (the Board) is authorized to grant to qualified corporations the privilege of establishing foreign-trade zones in or adjacent to U.S. Customs ports of entry;

Whereas, the Board's regulations (15 CFR Part 400) provide for the establishment of special-purpose subzones when existing zone facilities cannot serve the specific use involved;

Whereas, an application from the Port of Houston Authority, grantee of Foreign-Trade Zone 84, for authority to establish special-purpose subzone status at the oil refinery/petrochemical complex of Exxon Corporation, in Harris County, Texas, was filed by the Board on December 12, 1995, and notice inviting public comment was given in the Federal Register (FTZ Docket 79–95, 61 FR 1323, 1–19–96); and,

Whereas, the Board adopts the findings and recommendations of the examiner's report, and finds that the requirements of the FTZ Act and Board's regulations would be satisfied, and that approval of the application would be in the public interest if approval is subject to the conditions listed below;

Now, therefore, the Board hereby authorizes the establishment of a subzone (Subzone 84O) at the oil refinery/petrochemical complex of Exxon Corporation, in Harris County, Texas, at the location described in the application, subject to the FTZ Act and the Board's regulations, including § 400.28, and subject to the following conditions:

1. Foreign status (19 CFR 146.41, 146.42) products consumed as fuel for the refinery shall be subject to the applicable duty rate.

2. Privileged foreign status (19 CFR 146.41) shall be elected on all foreign merchandise admitted to the subzone, except that non-privileged foreign (NPF) status (19 CFR 146.42) may be elected on refinery inputs covered under HTSUS Subheadings #2709.00.1000–#2710.00.1050, #2710.00.2500 and #2710.00.4510 which are used in the production of:

—Petrochemical feedstocks and refinery by-products (examiners report, Appendix D);
—Products for export; and,
—Products eligible for entry under HTSUS # 9808.00.30 and 9808.00.40 (U.S. Government purchases).

3. The authority with regard to the NPF option is initially granted until September 30, 2000, subject to extension.

Signed at Washington, DC, this 16th day of July 1996.

Robert S. LaRussa,

Acting Assistant Secretary of Commerce for Import Administration, Alternate Chairman, Foreign-Trade Zones Board.

John J. Da Ponte, Jr.,

Executive Secretary.

[FR Doc. 96–18938 Filed 7–24–96; 8:45 am]

BILLING CODE 3510–DS–P

International Trade Administration

[A–357–804]

Notice of Preliminary Results of the 1992/93 Antidumping Duty Administrative Review: Silicon Metal From Argentina

AGENCY: Import Administration, International Trade Administration, Department of Commerce.

SUMMARY: The Department of Commerce (the Department) is conducting an administrative review of the antidumping duty order on silicon metal from Argentina in response to requests by the petitioners [1] and the respondents.[2] This review covers shipments of this merchandise to the United States during the period September 1, 1992 through August 31, 1993.

We have preliminary determined that sales have been made below normal foreign market value (FMV). If these preliminary results are adopted in our final results, we will instruct U.S. Customs to assess antidumping duties equal to the differences between the United States price and FMV.

Interested parties are invited to comment on the preliminary results. Parties who submit arguments are requested to submit with each argument: (1) A statement of the issue;

[1] American Alloys Inc., American Silicon Technologies, ELKEM Metals Company, Globe Metallurgical Inc., and SKW Metals & Alloys Inc.

[2] Silarsa, S.A. and Electrometalurgica Andina.

and (2) a brief summary of the argument.

EFFECTIVE DATE: July 25, 1996.

FOR FURTHER INFORMATION CONTACT: Magd Zalok or Howard Smith, Office of AD/CVD Enforcement, Import Administration, International Trade Administration, U.S. Department of Commerce, 14th Street and Constitution Ave., NW., Washington, DC 20230; telephone: (202) 482–4162 or (202) 482–5193, respectively.

SUPPLEMENTARY INFORMATION:

Applicable Statute

Unless otherwise indicated, all citations to the statute and to the Department's regulations are references to the provisions as they existed on December 31, 1994.

Background

On September 26, 1991, the Department published in the Federal Register (56 FR 48779) the antidumping duty order on silicon metal from Argentina. On September 7, 1993, the Department published in the Federal Register (58 FR 47116) the notice of Opportunity to Request Administrative Review (AR) for the 1992/93 review period. On September 17 and 29, 1993, respectively, Silarsa, S.A. (Silarsa), and Electrometalurgica Andina (Andina) requested an AR for the 1992/93 review period. Petitioners requested an AR on September 30, 1993. On October 18, 1993, in accordance with 19 CFR 353.22 (c), we initiated an AR of this order on Andina and Silarsa for the period September 1, 1992 through August 31, 1993 (58 FR 53710). The Department is now conducting this AR in accordance with section 751 of the Tariff Act of 1930, as amended (the Tariff Act).

Scope of Review

The product covered by this review is silicon metal. During the less-than-fair-value (LTFV) investigation, the silicon metal was described as containing at least 96.00, but less than 99.99 percent of silicon by weight. In response to a request by petitioners for clarification of the scope of the antidumping duty order on silicon metal from the People's Republic of China (PRC), the Department determined that material with a higher aluminum content containing between 89 and 96 percent silicon by weight is the same class or kind of merchandise as silicon metal described in the LTFV investigation (*see Final Scope Rulings—Antidumping Duty Orders on Silicon Metal From the People's Republic of China, Brazil, and Argentina* (February 3, 1993)). Therefore, such material is within the scope of the orders on silicon metal from the PRC, Brazil, and Argentina. Silicon metal is currently provided for under subheadings 2804.69.10 and 2804.69.50 of the Harmonized Tariff Schedule (HTS) and is commonly referred to as a metal. Semiconductor-grade silicon (silicon metal containing by weight not less than 99.99 percent of silicon and provided for in subheading 2804.61.00 of the HTS) is not subject to this review. The HTS subheadings are provided for convince and U.S. Customs purposes only; our written description of the scope of the proceeding is dispositive.

Period of Review

The period of review (POR) is September 1, 1992 through August 31, 1993.

Best Information Available

In accordance with section 776(c) of the Tariff Act, we have preliminarily determined that the use of best information available (BIA) is appropriate for Silarsa. In this review, Silarsa failed to respond to the Department's questionnaire. The Department's regulations provide that we take into account whether a party refuses to provide requested information (19 CFR 353.37(b)). In determining what to use as BIA, the Department follows a two-tiered methodology. The Department assigns lower margins to those respondents who cooperate in a review (tier two), and margins based on more adverse assumptions for those respondents who do not cooperate in the review, or who significantly impede the proceeding (tier one). *See Antifriction Bearings (Other than Tapered Roller Bearings) and Parts thereof from France et al;* final Results of Antidumping Duty Administrative Review, 57 FR 28360 (June 24, 1992) (AFBs II); *Allied Signal Aerospace Co.* v. *United States,* 996 F.2d 1185 (Fed.Cir., June 22, 1993), aff'd, 28 F.3d 1188, cert. denied, 1995 U.S. Lexis 100 (1995) (Allied-Signal)).

Given that Silarsa failed to respond to our questionnaire, we have assigned to it a margin based on first-tier BIA, which is the higher of (1) The highest of the rates found for any firm for the same class or kind of merchandise in the same country of origin in the LTFV investigation or a prior administrative review; or (2) the highest rate found in the present administrative review for any firm for the same class or kind of merchandise from the same country of origin. AFBs II, 57 FR at 28379.

In this review, we have assigned to Silarsa, as BIA, 24.62 percent, the rate assigned to Silarsa in the *Amendment to Final Results of Antidumping Administrative Review (1991/92): Silicon Metal from Argentina* (the *first review*) (59 FR 1617, April 6, 1994), which is the highest rate from any prior segment of the proceeding.

U.S. Price

We based USP on PP in accordance with section 772(b) of the Tariff Act, because the subject merchandise was sold to unrelated purchasers in the United States prior to importation to the United States. We calculated PP based on packed f.o.b. and c&f prices to unrelated customers in the United States, and made deductions, where appropriate, for foreign inland freight, port authority fees, port handling fees, custom's fees, and ocean freight costs, in accordance with section 772(d)(2) of the Act. In accordance with section 772(d)(1)(c) of the Act, we increased PP for uncollected duties by reason of exportation.

Based on the CAFC opinion in *American Alloys, Inc.* v. *United States,* 30 F.3d 1469 (Fed. Cir. 1994) (*American Alloys*), the Department issued a questionnaire requesting that Andina demonstrate that the reembolso taxes for which it is requesting an upward adjustment to U.S. price were, in fact, imposed directly on the exported merchandise or components thereof. Andina, however, failed to respond to the Department's questionnaire. Therefore, absent sufficient information on the record regarding reembolso taxes, no upward adjustment was made. Moreover, as we determined in the first administrative review, we continued to treat turnover and lote hogar taxes as taxes on gross revenue, not taxes imposed directly upon the merchandise or components thereof. Therefore, we made no upward adjustment to the PP for turnover or lote hogar taxes. *See Final Results of Antidumping Administrative Review (1991/92): Silicon Metal from Argentina* (58 FR 238, December 14, 1993) (Comment 16).

We made adjustments to Andina's reported date of shipment and date of payment to reflect the date on which the merchandise left the factory and the date on which payment was made, respectively. Also, because Andina failed to provide sufficient information on its short-term borrowings, we used, as best information available, the highest interest rate on the record for Andina's short-term loans denominated in U.S. dollars in calculating the imputed credit related to U.S. sales.

Foreign Market Value

To calculate FMV, the Department used home market price or constructed

value (CV), as defined in section 773 of the Tariff Act, as appropriate.

Petitioners alleged that Andina made home market sales during the POR at prices below its cost of production (COP). Based on petitioners' allegation, we concluded that we had reasonable grounds to believe or suspect that sales were made below the COP. Thus, in accordance with section 773(b), we initiated a cost investigation.

In order to determine whether home market prices were below the COP within the meaning of section 773(b) of the Act, we performed a product-specific cost test in which we examined whether each product sold in the home market during the POI was priced below the COP. For each product, we compared the COP to the home market unit price.

We calculated COP based on the sum of Andina's cost of materials, direct labor, variable and fixed factory overhead, selling, general and administrative expenses, and packing, in accordance with 19 CFR 353.51(c). We revised Andina's COP calculations as follows:

(1) Andina calculated incorrectly the unit selling expenses included in COP by dividing total selling expenses by the tons of subject merchandise produced. We recalculated the unit selling expenses by dividing total selling expenses by tons of subject merchandise sold.

(2) Andina deducted incorrectly from the COP income earned from its subsidiary which is not directly related to production. We disallowed these deductions because it is our practice not to reduce the COP by income not directly related to production of the subject merchandise.

(3) Andina calculated the plant general services (PGS) costs for each cost center by allocating (a) one portion of its total PGS costs to each cost center based on the tons of raw material and intermediate products going into each cost center, (b) another portion of its total PGS costs to its cost centers based on tons of intermediate and final products coming from each cost center, and (c) a third portion of its total PGS costs to its cost centers based on salaries incurred for each cost center. We rejected Andina's methodology because it determined arbitrarily the portions of PGS costs allocated using the bases noted above without demonstrating that these portions are the appropriate amounts.

We determined that labor hours are a reasonable measure of the degree to which a cost center benefits from plant general services. Moreover, Andina indicated that it used labor hours to allocate plant general services in cost reports prepared in the normal course of business. Therefore, we reallocated plant general services to Andina's cost centers using labor hours as the allocation base.

(4) Andina did not allocate depreciation related to a furnace, while it was idle during part of the POR, to the subject merchandise because non-subject merchandise was produced in that furnace after it had been reactivated. We recalculated depreciation related to that furnace to all of Andina's products including the subject merchandise because this furnace could have been used to produce any of Andina's products had it not been idle.

(5) Andina failed to use the interest expenses reflected in its consolidated financial statement as a basis for calculating the interested expenses included in the COP. Furthermore, Andina deducted incorrectly from its interest expenses interest income from long-term investments. We recalculated the interest expenses using the interest expenses in Andina's consolidated financial statement. Furthermore, consistent with the Department's practice, we did not reduce interest expenses by income from long-term investments.

(6) Andina classified incorrectly plant property taxes, plant insurance, and rejected VAT tax credits as general and administrative expenses. We reclassified these expenses as factory overhead.

(7) Andina deducted from the COP indirect taxes rebated or duties refunded by reason of exportation. We disallowed those deductions, which are related to exported merchandise, because the COP is based on costs related to home market sales.

If over 90 percent of Andina's sales of a given product were at prices above the COP, we did not disregard any below-cost sales because we determined that such sales were not made in substantial quantities. If between ten and 90 percent of Andina's sales of a given product were at prices below the COP, and such sales were over an extended period of time, we discarded only the below-cost sales. Where we found that more than 90 percent of Andina's sales were at prices below the COP, and such sales were over an extended period of time, we disregarded all sales for that product and calculated FMV based on CV.

Section 773(b) of the Act requires us to examine whether below-cost sales were made in substantial quantities over an extended period of time, and whether such sales were made at prices that would permit recovery of all costs within a reasonable period of time in the normal course of trade. In order to establish that below cost sales were made over an extended period of time, we performed the following analysis on a product-specific basis: (1) if a respondent sold a product in only one month of the POR and there were sales in that month below the COP, or (2) if a respondent sold a product during two months or more of the POR and there were sales below the COP during two or more of those months, then below-cost sales were considered to have been made over an extended period of time. Andina provided no evidence to indicate that below COP prices would permit recovery of all costs within a reasonable period of time in the normal course of trade.

Based on our analysis, we found that all of Andina's home market sales during the POR were below cost. Therefore, we disregarded all home market sales and based FMV on constructed value.

In accordance with section 773(e), we calculated CV based on the sum of the cost of materials, fabrication, general expenses, U.S. packing costs and profit. The cost of materials included import duties paid on imported electrodes used to produce silicon metal. In accordance with section 773(e)(1)(B) (i) and (ii) of the Act we used: (1) Andina's reported general expenses because such expenses were greater than the statutory minimum of ten percent of the COM; and (2) the statutory minimum of eight percent of the sum of COM and general expenses for profit because actual profit was less than the statutory minimum. The adjustments noted above in our discussion of the COP were also applied to the CV calculation. Given the fact that Andina failed to provide information related to indirect taxes as described above, as BIA, we did not reduce CV by indirect taxes reimbursed upon exportation. We disallowed deductions from CV for duty drawback because we made an upward adjustment to the USP for such duties. Finally, in addition to the interest expense adjustments to the COP noted above, we adjusted the interest expense Andina included in CV because Andina improperly reduced the reported interest expense by interest expenses associated with inventories. Where applicable, we made adjustments for differences in credit expenses. Also, because Andina failed to provide sufficient information on the record with respect to its short-term borrowings, we used, as BIA, the only information available to us, which was the average bank lending rates applicable to short- and medium-term financing in Argentina for the POR,

published in the International Financial Statistics by the International Monetary Fund, in calculating home market credit.

Currency Conversion

We made currency conversions based on the official monthly exchange rates in effect on the dates of the U.S. sales as published by the International Monetary Fund.

Preliminary Results of Review

As a result of our review, we preliminarily determine that the following margin exists for the period September 1, 1992 through August 31, 1993:

Manufacturer/exporter	Review period	Margin (Percent)
Andina	9/01/92–8/31/93	8.52
Silarsa	9/01/92–8/31/93	24.62

Interested parties may request a disclosure within five days of publication of this notice and may request a hearing within 10 days of the date of publication. Any hearing, if requested, will be held 44 days after the date of publication, or the first workday thereafter. Interested parties may submit case briefs within 30 days of the date of publication. Rebuttal briefs, limited to issues raised in the case briefs, may be filed not later than 37 days after the date of publication. The Department will publish a notice of the final results of this administrative review, which will include the results of its analysis of issues raised in any such case briefs.

The Department shall determine, and the U.S. Customs Service shall assess, antidumping duties on all appropriate entries. Individual differences between USP and FMV may vary from the percentages stated above. The Department will issue appraisement instructions directly to the U.S. Customs Service.

Furthermore, the following deposit requirements will be effective for all shipments of silicon metal from Argentina entered, or withdrawn from warehouse, for consumption on or after the publication date of the final results of this AR, as provided by section 751(a)(1) of the Act: (1) The cash deposit rates for Silarsa and Andina will be the rates established in the final results of this review, except if the rate is less than 0.5 percent and, therefore, *de minimis* within the meaning of 19 CFR 353.6, the cash deposit will be zero; (2) for previously reviewed or investigated companies not listed above, the cash deposit rate will continue to be the company-specific rate published for the most recent period; (3) if the exporter is not a firm covered in this review, a prior review, or the original LTFV investigation, but the manufacturer is, the cash deposit rate will be the rate established for the most recent period for the manufacturer of the merchandise; and (4) if neither the exporter nor the manufacturer is a firm covered in this or any previous conducted by the Department, the cash deposit rate will be the ''all others'' rate, as set forth below.

On March 25, 1993, the U.S. Court of International Trade (CIT), in *Floral Trade Council* v. *United States,* 822 F.Supp. 766 (CIT 1993), and *Federal-Mogul Corporation* v. *United States,* 822 F.Supp. 782 (CIT 1993), decided that once an ''all others'' rate is established for a company, it can only be changed through an administrative review. The Department has determined that in order to implement this decision, it is appropriate to reinstate the original ''all others'' rate from the LTFV investigation (or that rate as amended for correction of clerical errors or as a result of litigation) in proceedings governed by antidumping duty orders. In proceedings governed by antidumping findings, unless we are able to ascertain the ''all others'' rate from the original investigation, the Department has determined that it is appropriate to adopt the ''new shipper'' rate established in the first final results of administrative review published by the Department (or that rate as amended for correction of clerical errors or as a result of litigation) as the ''all others'' rate for the purposes of establishing cash deposits in all current and future administrative reviews. Because this proceeding is governed by an antidumping duty order, the ''all others'' rate for the purposes of this review will be 17.87 percent, the ''all others'' rate established in the LTFV investigation.

These cash deposit requirements, when imposed, shall remain in effect until publication of the final results of the next administrative review.

This notice serves as a preliminary reminder to importers of their responsibility under 19 CFR 353.26 to file a certificate regarding the reimbursement of antidumping duties prior to liquidation of the relevant entries during this review period. Failure to comply with this requirement could result in the Secretary's presumption that reimbursement of antidumping duties occurred and the subsequent of double antidumping duties.

This administrative review and notice are in accordance with section 751(a)(1) of the Act (19 U.S.C. 1675(a)(1)) and 19 CFR 353.22.

Dated: July 18, 1996.

Robert S. LaRussa,

Acting Assistant Secretary for Import Administration.

[FR Doc. 96–18937 Filed 7–24–96; 8:45 am]

BILLING CODE 3510–DP–P

[Docket No. 960719198–6198–01]

RIN 0625.XX08

Announcement of Best Global Practices Award

AGENCY: International Trade Administration, Commerce.

ACTION: Notice.

SUMMARY: This Notice announces the implementation of the Best Global Practices Award by the International Trade Administration (ITA) of the Department of Commerce to recognize the programs and practices of U.S. companies that have exhibited extraordinary leadership and accomplishment in corporate citizenship in overseas activities. This notice sets forth the criteria for the award, who may apply, how companies may apply, the procedures by which the Secretary of Commerce will decide on who will receive the award, and the expected timetable.

DATES: The closing date for applications is October 11, 1996. The Department of Commerce expects to announce the winner or winners of the award in the fall of 1996.

ADDRESSES: Request for Applications: Application forms will be available from ITA starting on the day this notice is published. To obtain a copy of the application form please telephone (202) 482–4501, or facsimile (202) 482–1999 (these are not toll free numbers); or send a written request with two self-addressed mailing labels to the Office of Export Promotion Coordination, International Trade Administration, U.S. Department of Commerce, 14th Street and Constitution Avenue, N.W., Room 2003, Washington, D.C. 20230. You may call 1–800–USA–TRADE and follow the voice prompt to have the application faxed directly to you. You also may go to the International Trade Administration Internet Home Page http://www.ita.doc.gov/itahome.html, click on Best Global Practices and down load the application form. You can use any of these methods to access sample codes of conduct donated by international companies and organizations interested in furthering good corporate citizenship worldwide.

Only one copy of the application form will be provided to each organization requesting it, but it may be reproduced by the requester. An original and two copies of the application and supplemental material are to be sent to the Office of Export Promotion Coordination, International Trade Administration, U.S. Department of Commerce, 14th Street and Constitution Avenue, N.W., Room 2003, Washington, D.C. 20230.

FOR FURTHER INFORMATION CONTACT: David C. Bowie, Deputy Director, Office of Export Promotion Coordination, tel. (202) 482–4501. This is not a toll-free number.

SUPPLEMENTARY INFORMATION: On May 26, 1995, President Clinton announced the adoption of Model Principles for U.S. firms in their overseas operations, as follows:

Model Business Principles

Recognizing the positive role of U.S. business in upholding and promoting adherence to universal standards of human rights, the Administration encourages all businesses to adopt and implement voluntary codes of conduct for doing business around the world that cover at least the following areas:

1. Provision of a safe and healthful workplace.
2. Fair employment practices, including avoidance of child and forced labor and avoidance of discrimination based on race, gender, national origin or religious beliefs; and respect for the right of association and the right to organize and bargain collectively.
3. Responsible environmental protection and environmental practices.
4. Compliance with U.S. and local laws promoting good business practices, including laws prohibiting illicit payments and ensuring fair competition.
5. Maintenance, through leadership at all levels, of a corporate culture that respects free expression consistent with legitimate business concerns, and does not condone political coercion in the workplace; that encourages good corporate citizenship and makes a positive contribution to the communities in which the company operates; and where ethical conduct is recognized, valued and exemplified by all employees.

In adopting voluntary codes of conduct that reflect these principles, U.S. companies should serve as models, encouraging similar behavior by their partners, suppliers, and subcontractors.

Adoption of codes of conduct reflecting these principles is voluntary. Companies are encouraged to develop their own codes of conduct appropriate to their particular circumstances. Many companies already apply standards or codes that incorporate these principles. Companies should find appropriate means to inform their shareholders and the public of actions undertaken in connection with these principles. Nothing in the principles is intended to require a company to act in violation of host country or U.S. law. This statement of principles is not intended for legislation.''

The Best Global Practices award will be presented to a company that has established programs that show leadership and accomplishment in meeting the goals of one or more of these five Model Principles during the company's last three years of operations.

Who may apply: Any U.S. company may apply for the award. For purposes of this award, a U.S. company is defined as one that is incorporated in the United States. A U.S. company may apply on its own behalf, and outside organizations and individuals may apply on behalf of an eligible company (with that company's consent).

Selection of award winners: The Secretary of Commerce will select a winner or winners with the advice of an interagency group consisting of representatives from the Departments of Justice, State, Labor, and the Environmental Protection Agency. The Secretary may also seek the advice of private sector experts in the fields covered by the Model Business Principles.

How to Apply: Completed applications should be sent to the Office of Export Promotion Coordination, International Trade Administration, U.S. Department of Commerce, 14th Street and Constitution Avenue, N.W., Room 2003, Washington, D.C. 20230, postmarked not later than October 11, 1996.

Each item set forth in the application form should be addressed. Failure to submit all applicable information may delay processing of the application. Supplemental materials (annual reports, documentary material, etc.) are encouraged. Inquiries regarding the application process should also be forwarded to this office. Applicants will be notified by mail of the receipt of their applications and also any deficiencies in the application. When the award process is complete, all applicants will be notified by mail.

Information collection: The information is being collected in order to allow the Department of Commerce to judge applicants for the Best Global Practices Award. The information submitted by applicants will to be used by the Department and the panel of judges drawn from government agencies to select the applicant whose conduct best exemplifies the Best Global Practices. The information called for in the application is voluntary, but must be submitted in order to be considered for the Best Global Practices Award. Applicants are advised not to include business confidential information because confidentiality cannot be guaranteed.

Notwithstanding any other provision of law, no person is required to respond to nor shall a person be subject to a penalty for failure to comply with a collection of information subject to the requirements of the Paperwork Reduction Act unless that collection of information displays a currently valid OMB Control Number.

OMB Control Number 0625–0226, expiration date November 30, 1996.

Dated: July 19, 1996.

David C. Bowie,

Deputy Director, Office of Export Promotion and Coordination.

[FR Doc. 96–18927 Filed 7–24–96; 8:45 am]

BILLING CODE 3510–DR–U

National Oceanic and Atmospheric Administration

[I.D. 050196A]

Taking and Importing of Marine Mammals; Offshore Seismic Activities in the Beaufort Sea

AGENCY: National Marine Fisheries Service (NMFS), National Oceanic and Atmospheric Administration (NOAA), Commerce.

ACTION: Notice of issuance of an incidental harassment authorization.

SUMMARY: In accordance with provisions of the Marine Mammal Protection Act (MMPA) as amended, notification is hereby given that an Incidental Harassment Authorization to take small numbers of bowhead whales and other marine mammals by harassment incidental to conducting seismic surveys in the Northstar Unit and nearby waters, in the Beaufort Sea in state and federal waters has been issued to BP Exploration (Alaska) 900 East Benson Boulevard, Anchorage, AK 99519 (BPXA).

EFFECTIVE DATE: This authorization is effective from July 18, 1996, until November 1, 1996, unless extended.

ADDRESSES: The application, authorization, revised monitoring plan, and environmental assessment (EA) are available by writing to the Chief, Marine Mammal Division, Office of Protected Resources, National Marine Fisheries Service, 1315 East-West Highway, Silver Spring, MD 20910–3225, by telephoning one of the contacts listed below or by leaving a voice mail request at (301) 713–4070.

FOR FURTHER INFORMATION CONTACT: Kenneth R. Hollingshead, Office of Protected Resources, NMFS, (301) 713–

2055, Ron Morris, Western Alaska Field Office, NMFS, (907) 271–5006.

SUPPLEMENTARY INFORMATION:

Background

Section 101(a)(5)(A) and (D) of the MMPA (16 U.S.C. 1361 *et seq.*) directs the Secretary of Commerce to allow, upon request, the incidental, but not intentional taking of marine mammals by U.S. citizens who engage in a specified activity (other than commercial fishing) within a specified geographical region if certain findings are made and either regulations are issued or, if the taking is limited to harassment, notice of a proposed authorization is provided to the public for review.

Permission may be granted if NMFS finds that the taking will have a negligible impact on the species or stock(s), will not have an unmitigable adverse impact on the availability of the species or stock(s) for subsistence uses, and the permissible methods of taking and requirements pertaining to the monitoring and reporting of such taking are set forth.

On April 10, 1996 (61 FR 15884), NMFS published an interim rule establishing, among other things, procedures for issuing incidental harassment authorizations under section 101(a)(5)(D) of the MMPA in Arctic waters. For additional information on the procedures to be followed for this authorization, please refer to that document.

Summary of Request

On March 18, 1996, NMFS received an application from BPXA requesting an authorization for the harassment of small numbers of several species of marine mammals incidental to conducting seismic surveys during the open water season in waters in the Northstar Unit and in nearby waters, located in the U.S. Beaufort Sea. The survey is expected to take place between approximately July 20 and October 20, 1996, but would continue longer if ice conditions permit. A detailed description of the work planned is contained in the application and is available upon request (see **ADDRESSES**).

Comments and Responses

On May 20 and 21, 1996, NMFS met in Seattle, WA, with the applicant, the North Slope Borough, Minerals Management Service, and the Alaska Eskimo Whaling Commission (AEWC) to discuss the proposed monitoring plan. As a result of those discussions, the monitoring plan that was submitted with the application was revised. The revised monitoring plan that was submitted to NMFS and participants on June 11, 1996 was reviewed by a peer-review committee on or about June 1, 1996. This document is available upon request (see **ADDRESSES**).

A notice of receipt of the application and proposed authorization was published on May 28, 1996 (61 FR 26501) and a 30-day public comment period was provided on the application and proposed authorization. During the comment period, the comments received were from the applicant, the Marine Mammal Commission (MMC), the peer-review committee for the monitoring plan, and from one scientist retained by the AEWC. The comments of the applicant pertained to minor corrections to the proposed authorization notice, most notably that the survey is an ocean bottom cable survey, not a seismic streamer survey, and that ramp-up of the source, as proposed, was not technologically feasible. As a result, the ramp-up requirement has been modified to mandate that the procedure begin by firing the smallest gun first, and then adding additional guns in sequence until the full array is firing. Comments by the reviewers mentioned above that discuss issues pertaining to the contents of the monitoring plan, and the composition of the peer-review monitoring team, are not discussed further because these comments are limited either to procedures for conducting surveys and processing data, or events that have been completed, and not on the potential impact on marine mammals from the survey. Comments by the MMC concerning impacts and assessments of marine mammal takes are addressed below. Additional information on the activity and authorization request can be found in the proposed authorization notice and is not repeated here.

Comment 1: Noise from the seismic source may not be the sole source for marine mammal harassment. Noise from seismic and support vessels and aircraft may also result in noise.

Response: Noise from these identified sources is recognized as a secondary source for potential harassment of marine mammals. These sources are authorized under the incidental harassment authorization. The monitoring program addresses monitoring for this source of potential taking.

Comment 2: The documents seem to assume that there is no risk of marine mammals being hit and killed or injured by any of the vessels or becoming entangled and killed or injured in the airgun arrays. The MMC recommends that the authorization is automatically suspended if a marine mammal is hit and killed by vessels.

Response: The potential for a marine mammal strike by seismic vessels and support vessels is exceedingly small. As mentioned previously, OBC surveys do not employ hydrophone arrays, therefore, injury or death by arrays will not occur. Because: (1) few, if any, marine mammals are expected in the area during the time of the survey, (2) the vessels are underway at low speeds while laying or pulling OBC cable or conducting surveys, and (3) documented observations indicate that bowhead and gray whales avoid active seismic survey areas, a whale strike is not likely to occur. If a whale strike occurred, NMFS would investigate the incident and take appropriate action.

Comment 3: The MMC recommends that NMFS and the applicant ensure that the observers will be able to see marine mammals within the designated safety radii around the airgun whenever the arrays are operating.

Response: Observers will monitor the safety zones and zones of potential harassment around the source whenever visibility permits. Harassment assessments will be made based upon percentage of time spent observing in relation to total time for seismic operations. For the reasons provided in comment 2 above, few, if any, marine mammals are expected to approach the vessel and therefore, terminating surveys at night and during inclement weather is not warranted.

Consultation

Under section 7 of the Endangered Species Act, NMFS has completed consultation on the issuance of this authorization.

National Environmental Policy Act

In conjunction with the proposed notice, NMFS released an EA that addressed (1) the impacts on the human environment from issuance of the authorization, and (2) the alternatives to the proposed action. The EA also determined that the issuance of an Incidental Harassment Authorization would not have a significant impact on the human environment. No comments were received on the EA during the comment period, and, as a result, NMFS has issued a Finding of No Significant Impact for the issuance of an Incidental Harassment Authorization to BPXA. A copy of the EA is available upon request (see **ADDRESSES**).

Conclusions

NMFS has determined that the short-term impact of conducting seismic surveys in and near the Northstar Unit

of the Beaufort Sea will result, at worst, in a temporary modification in behavior by certain species of cetaceans. While behavioral modifications may be made by these species of cetaceans to avoid the resultant noise, this behavioral change is expected to have a negligible impact on the animals.

The number of potential incidental harassment takes will depend on the distribution and abundance of marine mammals (which vary annually due to variable ice conditions and other factors) in the area of seismic operations. Due to the distribution and abundance of marine mammals during the projected period of activity and the location of the proposed seismic activity in waters generally too shallow and distant from the edge of the pack ice for most marine mammals of concern, the number of potential harassment takings is estimated to be small. In addition, no take by injury and/or death is anticipated, and the potential for temporary or permanent hearing impairment will be avoided through incorporation of the mitigation measures described in the authorization.

Because bowhead whales are east of the seismic area in the Canadian Beaufort Sea until late August/early September, seismic activities are not expected to impact subsistence hunting of bowhead whales prior to that date. After September 1, 1996, BPXA will initiate aerial survey flights for bowhead whale assessments. Appropriate mitigation measures to avoid an unmitigable adverse impact on the availability of bowhead whales for subsistence needs was the subject of consultation between BPXA and subsistence users. As a result of discussions between the two parties, a Plan of Cooperation has been concluded. This Plan consists of three main components: (1) Communications, (2) conflict avoidance, and (3) dispute resolution.

Summer seismic exploration in and near the Northstar Unit has a small potential to influence seal hunting activities by residents of Nuiqsut. However, NMFS believes that because (1) the peak sealing season is during the winter months, (2) the main summer sealing is off the Colville delta (west and inshore of Northstar), and (3) the zone of influence by seismic sources on beluga and seals is fairly small, the Northstar Unit seismic survey will not have an unmitigable adverse impact on the availability of these stocks for subsistence uses.

Since NMFS is assured that the taking will not result in more than the incidental harassment (as defined by the MMPA Amendments of 1994) of small numbers of certain species of marine mammals, would have only a negligible impact on these stocks, will not have an unmitigable adverse impact on the availability of these stocks for subsistence uses, and would result in the least practicable impact on the stocks, NMFS has determined that the requirements of section 101(a)(5)(D) have been met and the authorization can be issued.

Authorization

Accordingly, NMFS has issued an incidental harassment authorization to BPXA for the above described seismic survey during the 1996 open water season provided the mitigation, monitoring and reporting requirements described in the authorization are undertaken.

Dated: July 18, 1996.

Patricia A. Montanio,

Acting Director, Office of Protected Resources, National Marine Fisheries Service.

[FR Doc. 96–18896 Filed 7–24–96; 8:45 am]

BILLING CODE 3510–22–F

[I.D. 071596D]

Mid-Atlantic Fishery Management Council; Meetings

AGENCY: National Marine Fisheries Service (NMFS), National Oceanic and Atmospheric Administration (NOAA), Commerce.

ACTION: Notice of public meetings.

SUMMARY: The Mid-Atlantic Fishery Management Council (Council) and their Coastal Migratory Committee with Atlantic States Marine Fisheries Commission's (ASMFC) Bluefish Board, Atlantic Mackerel, Squid, and Butterfish Committee (with Monitoring Committee and Advisors), and Law Enforcement Committee will hold public meetings.

DATES: The meetings will be held on August 6–8, 1996.

ADDRESSES: The meetings will be held at the Holiday Inn, 700 King Street, Wilmington, DE 19801; telephone: 302–655–0400 or 1–800–HOLIDAY.

Council address: Mid-Atlantic Fishery Management Council, 300 S. New Street, Dover, DE 19901; telephone: 302–674–2331.

FOR FURTHER INFORMATION CONTACT: David R. Keifer, Executive Director; telephone: 302–674–2331.

SUPPLEMENTARY INFORMATION:

August 6, 1996, from 8:00 a.m. until 2:00 p.m., the Coastal Migratory Committee and ASMFC Bluefish Board will meet.

August 6, 1996, from 10:00 a.m. until noon, the Atlantic Mackerel, Squid, and Butterfish Monitoring Committee will meet. *August 6, 1996, from 2:00 p.m. until 5:00 p.m.*, the Coastal Migratory Committee will meet as a Council Committee Of The Whole with the ASMFC Bluefish Board.

August 7, 1996, from 8:00 a.m. until 9:30 a.m., the Council will meet at which time there will be a Stock Assessment Workshop.

August 7, 1996, from 1:30 p.m. until 4:30 p.m., the Atlantic Mackerel, Squid, and Butterfish Committee will meet as a Council Committee Of The Whole with Advisors.

August 7, 1996, from 4:30 p.m. - 5:30 p.m., the Law Enforcement Committee will meet.

August 8, 1996, from 8:00 a.m. until approximately 1:30 p.m., the Council will meet.

The purpose of this meeting is to discuss the Bluefish Fishery Management Plan (FMP) Amendment 1, the 1997 bluefish management measures, review comments and recommendations for adoption of Amendment 6 and discuss 1997 specifications to the Atlantic Mackerel, Squid, and Butterfish FMP, discuss filleting of fish at sea. Further, the Council will discuss and may adopt for public hearing purposes a regulatory amendment to the Scup FMP, and will consider and may adopt a resubmittal of the disapproved quota provision of the Black Sea Bass FMP.

Special Accommodations

These meetings are physically accessible to people with disabilities. Requests for sign language interpretation or other auxiliary aids should be directed to Joanna Davis at the Council (see ADDRESSES) at least 5 days prior to the meeting dates.

Dated: July 19, 1996.

Richard W. Surdi,

Acting Director, Office of Fisheries Conservation and Management, National Marine Fisheries Service.

[FR Doc. 96–18897 Filed 7–24–96; 8:45 am]

BILLING CODE 3510–22–F

COMMITTEE FOR THE IMPLEMENTATION OF TEXTILE AGREEMENTS

Adjustment of Guaranteed Access Levels for Certain Cotton, Wool and Man-Made Fiber Textile Products Produced or Manufactured in the Dominican Republic

July 19, 1996.

AGENCY: Committee for the Implementation of Textile Agreements (CITA).

ACTION: Issuing a directive to the Commissioner of Customs increasing guaranteed access levels.

EFFECTIVE DATE: July 24, 1996.

FOR FURTHER INFORMATION CONTACT: Naomi Freeman, International Trade Specialist, Office of Textiles and Apparel, U.S. Department of Commerce, (202) 482–4212. For information on the quota status of these limits, refer to the Quota Status Reports posted on the bulletin boards of each Customs port or call (202) 927–5850. For information on embargoes and quota re-openings, call (202) 482–3715.

SUPPLEMENTARY INFORMATION:

Authority: Executive Order 11651 of March 3, 1972, as amended; section 204 of the Agricultural Act of 1956, as amended (7 U.S.C. 1854); Uruguay Round Agreements Act.

On the request of the Government of the Dominican Republic, the U.S. Government agreed to increase the 1996 Guaranteed Access Levels for Categories 338/638 and 448.

A description of the textile and apparel categories in terms of HTS numbers is available in the CORRELATION: Textile and Apparel Categories with the Harmonized Tariff Schedule of the United States (see Federal Register notice 60 FR 65299, published on December 19, 1995). Also see 61 FR 1359, published on January 19, 1996.

The letter to the Commissioner of Customs and the actions taken pursuant to it are not designed to implement all of the provisions of the Uruguay Round Agreements Act and the Uruguay Round Agreement on Textiles and Clothing, but are designed to assist only in the implementation of certain of their provisions.

Troy H. Cribb,

Chairman, Committee for the Implementation of Textile Agreements.

Committee for the Implementation of Textile Agreements

July 19, 1996.

Commissioner of Customs,
Department of the Treasury, Washington, DC 20229.

Dear Commissioner: This directive amends, but does not cancel, the directive issued to you on January 11, 1996, by the Chairman, Committee for the Implementation of Textile Agreements. That directive concerns imports of certain cotton, wool and man-made fiber textile products, produced or manufactured in the Dominican Republic and exported during the twelve-month period which began on January 1, 1996 and extends through December 31, 1996.

Effective on July 24, 1996, you are directed to increase the Guaranteed Access Levels for the following categories:

Category	Guaranteed Access Level
338/638	3,150,000 dozen.
448	60,000 dozen.

The Committee for the Implementation of Textile Agreements has determined that these actions fall within the foreign affairs exception of the rulemaking provisions of 5 U.S.C. 553(a)(1).

Sincerely,

Troy H. Cribb,

Chairman, Committee for the Implementation of Textile Agreements.

[FR Doc. 96–18878 Filed 7–24–96; 8:45 am]

BILLING CODE 3510–DR–F

DEPARTMENT OF DEFENSE

Department of the Army

Corps of Engineers

Intent To Prepare a Draft Environmental Impact Statement (DEIS) for the Proposed Master Plan Update at Jennings Randolph Lake, Maryland and West Virginia

AGENCY: U.S. Army Corps of Engineers, DOD.

ACTION: Notice of Intent.

SUMMARY: The Baltimore District, U.S. Army Corps of Engineers, proposes to update the Master Plan for Jennings Randolph Lake. The existing master plan was prepared in 1973 and does not address changes that have occurred since its development or since completion of the project. Since completion of the master plan, water quality in the lake and downstream of the dam has significantly improved, thereby increasing recreational opportunities. The purpose of the master planning process is to provide direction for project development and use as well as stewardship of project resources through the protection, conservation, and enhancement of natural, cultural, and constructed resources. The master plan update is authorized by the Energy and Water Development Appropriations Act of 1995.

FOR FURTHER INFORMATION CONTACT: Questions about the proposed action and DEIS can be addressed to Ms. Robyn Colosimo, Baltimore District, U.S. Army Corps of Engineers, Attn: CENAB–PL–EP, P.O. Box 1715, Baltimore, Maryland 21203–1715, telephone (410) 962–4995.

SUPPLEMENTARY INFORMATION: 1. The update of the Jennings Randolph Master Plan was initiated by the Energy and Water Development Appropriations Act of 1995, which states ''[the] Corps is directed to use available funds to initiate work on a revised master plan for Jennings Randolph Lake to reflect changing demands. To the extent practical, the Corps should consult and work with all affected interest groups in developing the revised plan.''

2. The project is located in Garrett County, Maryland, and Mineral County, West Virginia, on the North Branch Potomac River, approximately 8 miles upstream from Bloomington, Maryland. The project was authorized by the Flood Control Act of 1962 (Pub. L. 87–874) to provide water quality control in the North Branch, industrial and municipal water supply for the Potomac River basin, flood control protection for communities along the North Branch, and recreation. Construction of the dam was initiated in 1971 and completed in 1981. At full conservation pool, the lake, with a watershed of 263 square miles, extends upstream from the dam a distance of 6.6 miles and has a surface area of 952 acres. The total project, land and water, covers an area of 4,500 acres. Operation of the project has resulted in significant improvement to water quality in the North Branch Potomac River downstream of the dam, particularly during low flow conditions.

3. The Corps operates and maintains five recreation sites at Jennings Randolph including a campground, two overlooks, a picnic area, and a boat launch. The Maryland Department of Natural Resources (MD DNR) is presently constructing a boat launch facility in Maryland. Planned future development at this location will include a picnic area and campground. Since 1983, Maryland and West Virginia have stocked the lake with a variety of fish, including walleye; largemouth and smallmouth bass; channel catfish; and rainbow, lake, and brown trout. MD DNR raises trout in pens located in the stilling basin below the dam for stocking the Potomac River and other Maryland streams. The Mineral County Park and Recreation Commission operates and maintains an access area for whitewater rafting and fishing downstream of the dam near Barnum, West Virginia.

4. The master plan will determine the types and quantities of development the project can support environmentally and economically. The master plan will incorporate information from previous and ongoing studies, including the Jennings Randolph Lake Reallocation Study and the North Branch Potomac River Water Resources Reconnaissance Study, visitor needs, local and regional interests, and resource agency concerns. The master plan will identify alternatives for recreational

development and natural resource management at a conceptual level. The analysis of alternatives will evaluate consistency with authorizing legislation, project operations, and resource use objectives; economic benefits; and potential impacts to environmental and cultural resources. Recommendations for future project development and management will be made based on this analysis.

5. The Baltimore District is preparing a programmatic DEIS that will be integrated with the Master Plan. Potential effects of proposed projects to water quality, fish and wildlife, vegetation, cultural resources, aesthetics, recreation, and other resources will be investigated. If applicable, the DEIS will also apply guidelines issued by the Environmental Protection Agency under authority of Section 404 of the Clean Water Act of 1977 (Pub. L. 95–217).

6. The Baltimore District invites interested Federal, state, and local agencies and other interested organizations and parties to participate in this study. Agencies that will be involved in the DEIS process include, but are not limited to, the U.S. Environmental Protection Agency, the U.S. Fish and Wildlife Service, the Maryland Department of Natural Resources, the West Virginia Department of Natural Resources, Maryland Historical Trust, West Virginia Department of Culture and History, North Branch Potomac River Task Force, and the Interstate Commission on the Potomac River Basin. Coordination letters, study bulletins, notices, and workshops will be included as part of the public involvement program, as needed.

7. The DEIS is tentatively scheduled to be available for public review in March of 1997.

Harold L. Nelson,

Asst. Chief, Planning Division.

[FR Doc. 96–18882 Filed 7–24–96; 8:45 am]

BILLING CODE 3710–41–M

DEPARTMENT OF EDUCATION

Notice of Proposed Information Collection Requests

AGENCY: Department of Education.

ACTION: Proposed collection; comment request.

SUMMARY: The Director, Information Resources Group, invites comments on the proposed information collection requests as required by the Paperwork Reduction Act of 1995.

DATES: Interested persons are invited to submit comments on or before September 23, 1996.

ADDRESSES: Written comments and requests for copies of the proposed information collection requests should be addressed to Patrick J. Sherrill, Department of Education, 600 Independence Avenue, S.W., Room 5624, Regional Office Building 3, Washington, DC 20202–4651.

FOR FURTHER INFORMATION CONTACT: Patrick J. Sherrill (202) 708–8196. Individuals who use a telecommunications device for the deaf (TDD) may call the Federal Information Relay Service (FIRS) at 1–800–877–8339 between 8 a.m. and 8 p.m., Eastern time, Monday through Friday.

SUPPLEMENTARY INFORMATION: Section 3506 of the Paperwork Reduction Act of 1995 (44 U. S. C. Chapter 35) requires that the Office of Management and Budget (OMB) provide interested Federal agencies and the public an early opportunity to comment on information collection requests. OMB may amend or waive the requirement for public consultation to the extent that public participation in the approval process would defeat the purpose of the information collection, violate State or Federal law, or substantially interfere with any agency's ability to perform its statutory obligations. The Director of the Information Resources Group publishes this notice containing proposed information collection requests prior to submission of these requests to OMB. Each proposed information collection, grouped by office, contains the following: (1) Type of review requested, e.g., new, revision, extension, existing or reinstatement; (2) Title; (3) Summary of the collection; (4) Description of the need for, and proposed use of, the information; (5) Respondents and frequency of collection; and (6) Reporting and/or Recordkeeping burden. OMB invites public comment at the address specified above. Copies of the requests are available from Patrick J. Sherrill at the address specified above.

The Department of Education is especially interested in public comment addressing the following issues: (1) Is this collection necessary to the proper functions of the Department, (2) will this information be processed and used in a timely manner, (3) is the estimate of burden accurate, (4) how might the Department enhance the quality, utility, and clarity of the information to be collected, and (5) how might the Department minimize the burden of this collection on the respondents, including through the use of information technology.

Dated: July 19, 1996.

Gloria Parker,

Director, Information Resources Group.

Office of the Under Secretary

Type of Review: New.

Title: Evaluation of the Tech-Prep Education Program.

Frequency: Annually.

Affected Public: Individuals or households; Not-for-profit institutions; State, local or Tribal Government, SEAs or LEAs.

Reporting and Recordkeeping Hour Burden:

Responses: 602

Burden Hours: 301

Abstract: This study is designed to describe state and local tech-prep programs and activities funded under the National Tech-Prep Education Program, and to identify best practices and effective approaches of local programs, and student outcomes.

[FR Doc. 96–18869 Filed 7–24–96; 8:45 am]

BILLING CODE 4000–01–P

Notice of Proposed Information Collection Requests

AGENCY: Department of Education.

ACTION: Submission for OMB review; comment request.

SUMMARY: The Director, Information Resources Group, invites comments on the proposed information collection requests as required by the Paperwork Reduction Act of 1995.

DATES: Interested persons are invited to submit comments on or before August 26, 1996.

ADDRESSES: Written comments should be addressed to the Office of Information and Regulatory Affairs, Attention: Wendy Taylor, Desk Officer, Department of Education, Office of Management and Budget, 725 17th Street, NW., Room 10235, New Executive Office Building, Washington, DC 20503. Requests for copies of the proposed information collection requests should be addressed to Patrick J. Sherrill, Department of Education, 600 Independence Avenue, SW., Room 5624, Regional Office Building 3, Washington, DC 20202–4651.

FOR FURTHER INFORMATION CONTACT: Patrick J. Sherrill (202) 708–8196. Individuals who use a telecommunications device for the deaf (TDD) may call the Federal Information Relay Service (FIRS) at 1–800–877–8339 between 8 a.m. and 8 p.m., Eastern time, Monday through Friday.

SUPPLEMENTARY INFORMATION: Section 3506 of the Paperwork Reduction Act of

1995 (44 U. S. C. Chapter 35) requires that the Office of Management and Budget (OMB) provide interested Federal agencies and the public an early opportunity to comment on information collection requests. OMB may amend or waive the requirement for public consultation to the extent that public participation in the approval process would defeat the purpose of the information collection, violate State or Federal law, or substantially interfere with any agency's ability to perform its statutory obligations. The Director of the Information Resources Group publishes this notice containing proposed information collection requests prior to submission of these requests to OMB. Each proposed information collection, grouped by office, contains the following: (1) Type of review requested, e.g., new, revision, extension, existing or reinstatement; (2) Title; (3) Summary of the collection; (4) Description of the need for, and proposed use of, the information; (5) Respondents and frequency of collection; and (6) Reporting and/or Recordkeeping burden. OMB invites public comment at the address specified above. Copies of the requests are available from Patrick J. Sherrill at the address specified above.

Dated: July 19, 1996.

Gloria Parker,

Director, Information Resources Group.

Office of Postsecondary Education

Type of Review: Extension.

Title: Fulbright-Hays Training Grants: Faculty Research Abroad Program and Doctoral Dissertation Research Abroad Program.

Frequency: Annually.

Affected Public: Individuals or households; Not-for-profit institutions.

Annual Reporting and Recordkeeping Hour Burden:

Responses: 805

Burden Hours: 27,200

Abstract: This application allows individual-graduate students and faculty members to compete for Fulbright-Hays fellowships and enables the Department of Education to make awards to U.S. institutions of higher education to develop and improve modern foreign language and area studies.

[FR Doc. 96–18870 Filed 7–24–96; 8:45 am]

BILLING CODE 4000–01–P

DEPARTMENT OF ENERGY

Revision to the Record of Decision for the Final Environmental Impact Statement on a Proposed Nuclear Weapons Nonproliferation Policy Concerning Foreign Research Reactor Spent Nuclear Fuel

AGENCY: Department of Energy.

ACTION: Revision to Record of Decision.

SUMMARY: The Department of Energy (DOE), pursuant to 10 CFR § 1021.315, and in consultation with the Department of State, is revising the Record of Decision issued on May 13, 1996 (61 Fed. Reg. 25092) on the Final Environmental Impact Statement on a Proposed Nuclear Weapons Nonproliferation Policy Concerning Foreign Research Reactor Spent Nuclear Fuel (the Final EIS, DOE/EIS–218F of February 1996), to allow the United States to take title to spent nuclear fuel and target material from foreign research reactors located in countries with other-than-high-income economies, as defined in the Final EIS, at locations other than the port of entry into the United States.

EFFECTIVE DATE: The revision to the Record of Decision is effective July 22, 1996.

FOR FURTHER INFORMATION CONTACT: For further information on the DOE program for the management of foreign research reactor spent nuclear fuel or the Record of Decision, contact: Mr. David G. Huizenga, Associate Deputy Assistant Secretary for Nuclear Material and Facility Stabilization, Office of Environmental Management (EM–60), U.S. Department of Energy, 1000 Independence Avenue, SW, Washington, D.C. 20585, (202) 586–5151. For information on DOE's National Environmental Policy Act (NEPA) process, contact: Ms. Carol Borgstrom, Director, Office of NEPA Policy and Assistance (EH–42), U.S. Department of Energy, 1000 Independence Avenue, SW, Washington, DC 20585, Telephone (202) 586–4600, or leave a message at 1–800–472–2756.

SUPPLEMENTARY INFORMATION:

I. Background

DOE, in consultation with the Department of State, issued the Final Environmental Impact Statement on a Proposed Nuclear Weapons Nonproliferation Policy Concerning Foreign Research Reactor Spent Nuclear Fuel (the Final EIS, DOE/EIS–218F) on February 16, 1996. The Record of Decision was issued on May 13, 1996, and was published in the Federal Register on May 17, 1996, (61 Fed. Reg. 25092). In the Final EIS, DOE and the Department of State considered the potential environmental impacts of a proposed policy to manage spent nuclear fuel and target material from foreign research reactors. After consideration of public comments submitted on the Draft EIS, and concerns expressed following issuance of the Final EIS, DOE, in consultation with the Department of State, decided to implement the proposed policy as identified in the Preferred Alternative contained in the Final EIS, subject to additional stipulations specified in Section VII of the Record of Decision.

II. Statement of Purpose

Subsequent to issuance of the Record of Decision on May 13, 1996, DOE, in consultation with the Department of State, determined that the need may arise during implementation of the policy for the United States to take title to spent nuclear fuel and target material from foreign research reactors located in countries with other-than-high-income economies at locations other than the port of entry into the United States.

Reason for the Revision: The point at which title to the spent nuclear fuel and target material transfers from the reactor operator to the United States has no effect on the physical processes that would take place under the acceptance policy, and thus would not have any effect on the potential impacts to the environment, workers, or the public. As a result, DOE, after consultation with the Department of State, concluded that the selection of the title transfer location could be made solely on programmatic considerations. At the time the Record of Decision was issued, DOE had not identified any advantage to the United States of taking title outside the United States. Therefore, the Record of Decision stated that transfer of title would occur when the foreign research reactor spent nuclear fuel and target material actually enters the land mass of the United States because that approach linked the transfer of title to an easily identifiable occurrence.

In the course of diplomatic discussions with Chile, Brazil, and Colombia, these foreign governments raised an important concern related to the location of the title transfer. Specifically, since the Department is seeking to include transportation casks from multiple South American countries on a single ocean-going vessel, a question has arisen regarding who would be liable for any potential damage when spent fuel from one country is in the territory of another during the shipment. Furthermore, DOE has been informed that shipowners

willing to transport spent nuclear fuel from South America without coverage under the Price-Anderson Act have not been identified. The United States Government can assume responsibility for these shipments and extend Price-Anderson Act coverage to the shipowners while the material is outside United States territory only if the United States has taken title to the spent nuclear fuel. Therefore, rather than taking title at the point the spent fuel actually enters the land mass of the United States (at the United States port), DOE is herein revising the Record of Decision to allow the title transfer location for spent nuclear fuel or target material from reactors located in countries with other-than-high-income economies to be determined on a case-by-case basis, to be specified in DOE's individual contracts with the reactor operators. Under such an approach, title could transfer as early as the departure of the loaded cask from the reactor site or at the foreign port-of-origin, or as late as entry into the United States as specified in the May 13, 1996, Record of Decision.

Similar liability concerns are not applicable for reactors in countries with high-income economies because reactor operators in these countries are able to provide sufficient insurance for transporting their own spent nuclear fuel to the United States.

For the reasons set forth above, Section VII (''Decision'') of the Record of Decision issued on May 13, 1996, is revised by adding a new Paragraph E to read as follows:

E. In the case of research reactors located in countries with high-income economies, as defined in the Final EIS, the United States will take title to the spent nuclear fuel and target material when it reaches the United States port of entry. In the case of research reactors located in countries with other-than-high-income economies, as defined in the Final EIS, the United States may take title to the spent nuclear fuel and target material at locations other than the port of entry into the United States. On a case-by-case basis, the United States may determine whether it is in its best interests, with regard to the execution of this policy, to take title to certain spent nuclear fuel and target material before it reaches the port of entry into the United States. The title transfer location will be specified in the contract with the affected reactor operator.

In addition, Section IX (''Basis for the Decision''), Paragraph G (''Title Transfer Location'') of the Record of Decision is revised to read as follows:

G. Title Transfer Location—The alternative points at which DOE might take title to the spent nuclear fuel and target material are discussed in Sections 2.2.1.4 and 2.2.2.4 of the Final EIS. The point at which title will be transferred has no effect on the physical processes that would take place, and thus will not have any effect on the impacts on the environment, workers, or the public. However, the point of title transfer does affect financial responsibility for risks associated with the shipments.

Under United States law, the Price-Anderson Act would provide indemnification coverage for spent nuclear fuel and target material shipments from foreign research reactors upon entry of the material into the United States regardless of when title is transferred to the United States. However, Price-Anderson coverage outside United States territory is provided only if the material is owned by, and used by, or under contract with the United States. Reactor operators located in countries with high-income economies are able to provide sufficient insurance for transporting their own spent nuclear fuel without Price-Anderson coverage. For countries with other-than-high-income economies, however, DOE has been informed that shipowners willing to transport spent nuclear fuel without coverage under the Price-Anderson Act have not been identified.

The approach for transfer of title discussed in Section VII.E., ensures that liability for accidents during the transportation process outside the United States will remain with the reactor operators for reactors in countries with high-income economies, while the United States Government will be accountable in the unlikely event of an accident within United States territory. On the other hand, the provision allowing DOE to take title to spent fuel from reactors in countries with other-than-high-income economies while the material is outside United States territory will allow DOE to assume financial responsibility for these shipments while outside the United States. This provision will provide a mechanism whereby liability coverage can be provided for segments of the transportation process that the reactor operators are unable themselves to provide.

The revision of the Record of Decision set forth in this Notice complies with the requirements of the National Environmental Policy Act (42 U.S.C. section 4321 et seq.) and its implementing regulations at 40 CFR Parts 1500–1508 and 10 CFR Part 1021. Because there are no environmental impacts associated with changing the title transfer location, no further environmental review is required under the National Environmental Policy Act or Executive Order 12114 (January 4, 1979) in order to effectuate the revision.

Issued in Washington, D.C., this 22nd day of July, 1996.

Alvin L. Alm,

Assistant Secretary for Environmental Management.

[FR Doc. 96–18943 Filed 7–24–96; 8:45 am]

BILLING CODE 6450–01–P

Federal Energy Regulatory Commission

[Docket No. CP96–641–000]

ANR Pipeline Company; Notice of Application

July 19, 1996.

Take notice that on July 15, 1996, ANR Pipeline Company (ANR) 500 Renaissance Center, Detroit, Michigan 48243, filed in Docket No. CP96–641–000 an application pursuant to Section 7(c) of the Natural Gas Act (NGA) requesting authority to construct and operate certain mainline looping facilities, all as more fully set forth in the application on file with the Commission and open to public inspection.

Specifically, ANR proposes to construct 11.9 miles of 41-inch loopline between its Bridgman and Sandwich compressor stations. ANR states that the proposed facilities are being installed to alleviate mainline capacity constraints that exist on ANR's Michigan Leg South system, which experiences 100 percent utilization during certain times of the year. ANR asserts that the incremental looping will relieve the bottleneck between its Bridgman and Sandwich compressor stations by 135 MMcf per day. ANR claims that the additional capacity on this segment of its system will enable ANR's shippers to make greater year-round use of their entitlements.

ANR also proposes to modify, as part of this mainline enhancement, aftercooling facilities at its St. John compressor station. ANR states that it believes that the aftercooling equipment it plans to install qualifies as an ''auxiliary installation'' exempt from the certificate requirements of Section 7(c) of the NGA since the aftercooling is being installed for the purpose of obtaining more efficient operation of the mainline facilities. ANR further states that if the Commission determines otherwise, ANR requests that the necessary certificate authorization also be granted.

ANR states that the proposed facilities are estimated to cost approximately $19.1 million. ANR requests a preliminary determination that the cost of the project should be allocated on a rolled-in basis in ANR's next Section 4 rate proceeding.

Any person desiring to be heard or to make any protest with reference to said application should on or before August 9, 1996, file with the Federal Energy Regulatory Commission, Washington, D.C. 20426, a motion to intervene or a protest in accordance with the

requirements of the Commission's Rules of Practice and Procedure (18 CFR 385.214 or 385.211) and the Regulations under the Natural Gas Act (18 CFR 157.10). All protests filed with the Commission will be considered by it in determining the appropriate action to be taken but will not serve to make the protestants parties to the proceeding. Any person wishing to become a party to a proceeding or to participate as a party in any hearing therein must file a motion to intervene in accordance with the Commission's Rules.

Take further notice that, pursuant to the authority contained in and subject to jurisdiction conferred upon the Federal Energy Regulatory Commission by Sections 7 and 15 of the Natural Gas Act and the Commission's Rules of Practice and Procedure, a hearing will be held without further notice before the Commission or its designee on this application if no motion to intervene is filed within the time required herein, if the Commission on its own review of the matter finds that a grant of the certificate is required by the public convenience and necessity. If a motion for leave to intervene is timely filed, or if the Commission on its own motion believes that a formal hearing is required, further notice of such hearing will be duly given.

Under the procedure herein provided for, unless otherwise advised, it will be unnecessary for ANR to appear or be represented at the hearing.

Lois D. Cashell,

Secretary.

[FR Doc. 96–18872 Filed 7–24–96; 8:45 am]

BILLING CODE 6717–01–M

[Docket No. RP96–313–000]

Columbia Gas Transmission Corporation; Notice of Proposed Changes in FERC Gas Tariff

July 19, 1996.

Take notice that on July 16, 1996, Columbia Gas Transmission Corporation (Columbia) tendered for filing as part of its FERC Gas Tariff, Second Revised Volume No. 1, the tariff sheets listed on Appendix A to the filing, to become effective August 16, 1996.

Columbia states that the revised tariff sheets are submitted to update references to revised regulations promulgated under Order No. 582 and certain other housecleaning changes.

Columbia states that copies of the filing is being served upon each of Columbia's firm customers, affected state commissions, and interruptible customers.

Any person desiring to be heard or to protest this filing should file a motion to intervene or protest with the Federal Energy Regulatory Commission, 888 First Street, NE, Washington, DC 20426, in accordance with Sections 385.214 and 385.211 of the Commission's Rules and Regulations. All such motions or protests must be filed as provided in Section 154.210 of the Commission's Regulations. Protests will be considered by the Commission in determining the appropriate action to be taken, but will not serve to make protestants parties to the proceeding. Copies of public inspection in the Public Reference Room.

Lois D. Cashell,

Secretary.

[FR Doc. 96–18875 Filed 7–24–96; 8:45 am]

BILLING CODE 6717–01–M

[Docket No. ER96–1410–000]

Cook Inlet Energy Supply; Notice of Issuance of Order

July 22, 1996.

Cook Inlet Energy Supply (Cook Inlet) submitted for filing a rate schedule under which Cook Inlet will engage in wholesale electric power and energy transactions as a marketer. Cook Inlet also requested waiver of various Commission regulations. In particular, Cook Inlet requested that the Commission grant blanket approval under 18 CFR part 34 of all future issuances of securities and assumptions of liability by Cook Inlet.

On July 10, 1996, pursuant to delegated authority, the Director, Division of Applications, Office of Electric Power Regulation, granted requests for blanket approval under Part 34, subject to the following:

Within thirty days of the date of the order, any person desiring to be heard or to protest the blanket approval of issuances of securities or assumptions of liability by Cook Inlet should file a motion to intervene or protest with the Federal Energy Regulatory Commission, 888 First Street, NE., Washington, DC 20426, in accordance with Rules 211 and 214 of the Commission's Rules of Practice and Procedure (18 CFR 385.211 and 385.214).

Absent a request for hearing within this period, Cook Inlet is authorized to issue securities and assume obligations or liabilities as a guarantor, indorser, surety, or otherwise in respect of any security of another person; provided that such issuance or assumption is for some lawful object within the corporate purposes of the applicant, and compatible with the public interest, and is reasonably necessary or appropriate for such purposes.

The Commission reserves the right to require a further showing that neither public nor private interests will be adversely affected by continued approval of Cook Inlet's issuances of securities or assumptions of liability.

Notice is hereby given that the deadline for filing motions to intervene or protests, as set forth above, is August 9, 1996.

Copies of the full text of the order are available from the Commission's Public Reference Branch, 888 First Street, NE., Washington, DC 20426.

Lois D. Cashell,

Secretary.

[FR Doc. 96–18903 Filed 7–24–96; 8:45 am]

BILLING CODE 6717–01–M

[Docket No. ER96–1858–000]

Mid-American Power LLC; Notice of Issuance of Order

July 22, 1996.

Mid-American Power LLC (Mid-American) filed an application for authorization to engage in power marketing activities at market-based rates, and for certain waivers and authorizations. In particular, Mid-American requested that the Commission grant blanket approval under 18 CFR Part 34 of all future issuances of securities and assumptions of liabilities by Mid-American. On July 16, 1996, the Commission issued an Order Conditionally Accepting For Filing Proposed Market-Based Rates, Subject To Outcome Of Related Proceedings (Order), in the above-docketed proceeding.

The Commission's July 16, 1996 Order granted the request for blanket approval under Part 34, subject to the conditions found in Ordering Paragraphs (D), (E), and (G):

(D) Within 30 days of the date of this order, any person desiring to be heard or to protest the Commission's blanket approval of issuances of securities or assumptions of liabilities by Mid-American should file a motion to intervene or protest with the Federal Energy Regulatory Commission, 888 First Street, NE., Washington, DC 20426, in accordance with Rules 211 and 214 of the Commission's Rules of Practice and Procedure, 18 CFR 385.211 and 385.214.

(E) Absent a request to be heard within the period set forth in Ordering Paragraph (D) above, Mid-American is hereby authorized to issue securities and to assume obligations or liabilities as guarantor, endorser, surety or

otherwise in respect of any security of another person; provided that such issue or assumption is for some lawful object within the corporate purposes of the applicant, compatible with the public interest, and reasonably necessary or appropriate for such purposes.

(G) The Commission reserves the right to modify this Order to require a further showing that neither public nor private interests will be adversely affected by continued Commission approval of Mid-American's issuances of securities or assumptions of liabilities. * * *

Notice is hereby given that the deadline for filing motions to intervene or protests, as set forth above, is August 15, 1996.

Copies of the full text of the Order are available from the Commission's Public Reference Branch, 888 First Street, NE., Washington, DC 20426.

Lois D. Cashell,

Secretary.

[FR Doc. 96–18904 Filed 7–24–96; 8:45 am]

BILLING CODE 6717–01–M

[Docket No. CP96–642–000]

Northwest Pipeline Corporation; Notice of Request Under Blanket Authorization

July 19, 1996.

Take notice that on July 16, 1996, Northwest Pipeline Corporation (Northwest), 295 Chipeta Way, Salt Lake City, Utah 84108, filed in Docket No. CP96–642–000 a request pursuant to Sections 157.205, 157.216 and 157.211 of the Commission's Regulations under the Natural Gas Act (18 157.205, 157.216, and 157.211) for authorization to upgrade its Gresham and North Eugene Meter Stations in Multnomah and Lane Counties, Oregon respectively, by partially abandoning certain existing facilities and constructing and operating appropriate upgraded replacement facilities under Northwest's blanket certificate issued in Docket No. CP82–433–000 pursuant to Section 7 of the Natural Gas Act, all as more fully set forth in the request that is on file with the Commission and open to public inspection.

Northwest proposes to upgrade the Gresham Meter Station by replacing approximately 150 feet of existing 4-inch inlet and outlet heater piping with new 6-inch inlet and outlet heater piping, replacing the existing 750,000 Btu per hour heater with a 1,000,000 Btu heater, replacing the existing regulator pilot springs in the 4-inch dual port regulators with new higher pressure regulator pilot springs and replacing the existing 2-inch meter station by-pass line with a new 4-inch meter station by-pass line. As a result of these changes the maximum design delivery capacity of this meter station will increase from approximately 22,910 Dth per day to approximately 27,800 Dth per day.

Northwest also proposes to upgrade the North Euguene Meter Station by replacing approximately 150 feet of existing 4-inch inlet and outlet heater piping with 6-inch inlet and outlet heater piping and by replacing two existing 4-inch filters with a single 6-inch filter. As a result of these changes the maximum delivery capacity of this meter station will increase from approximately 18,539 Dth per day to approximately 33,433 Dth per day.

Any person or the Commission's staff may, within 45 days after issuance of the instant notice by the Commission, file pursuant to Rule 214 of the Commission's Procedural Rules (18 CFR 385.214) a motion to intervene or notice of intervention and pursuant to Section 157.205 of the Regulations under the Natural Gas Act (18 CFR 157.205) a protest to the request. If no protest is filed within the time allowed therefore, the proposed activity shall be deemed to be authorized effective the day after the time allowed for filing a protest. If a protest is filed and not withdrawn within 30 days after the time allowed for filing a protest, the instant request shall be treated as an application for authorization pursuant to Section 7 of the Natural Gas Act.

Lois D. Cashell,

Secretary.

[FR Doc. 96–18873 Filed 7–24–96; 8:45 am]

BILLING CODE 6717–01–M

[Docket No. ER96–1196–000]

Oxbow Power Marketing, Inc.; Notice of Issuance of Order

July 22, 1996.

Oxbow Power Marketing, Inc. (Oxbow PM) filed an application for authorization to sell power at market-based rates, and for certain waivers and authorizations. In particular, Oxbow PM requested that the Commission grant blanket approval under 18 CFR Part 34 of all future issuances of securities and assumptions of liabilities by Oxbow PM. On July 12, 1996, the Commission issued an Order Conditionally Granting Application For Market-Based Rates (Order), in the above-docketed proceeding.

The Commission's July 12, 1996 Order granted the request for blanket approval under Part 34, subject to the conditions found in Ordering Paragraphs (C), (D), and (F):

(C) Within 30 days of the date of this Order, any person desiring to be heard or to protest the Commission's blanket approval of issuances of securities or assumptions of liabilities by Oxbow PM should file a motion to intervene or protest with the Federal Energy Regulatory Commission, 888 First Street, NE., Washington, DC 20426, in accordance with Rules 211 and 214 of the Commission's Rules of Practice and Procedure, 18 CFR 385.211 and 385.214.

(D) Absent a request to be heard within the period set forth in Ordering Paragraph (C) above, Oxbow PM is hereby authorized to issue securities and to assume obligations or liabilities as guarantor, endorser, surety or otherwise in respect of any security of another person; provided that such issue or assumption is for some lawful object within the corporate purposes of the applicant, compatible with the public interest, and reasonably necessary or appropriate for such purposes.

(F) The Commission reserves the right to modify this Order to require a further showing that neither public nor private interests will be adversely affected by continued Commission approval of Oxbow PM's issuances of securities or assumptions of liabilities. * * *

Notice is hereby given that the deadline for filing motions to intervene or protests, as set forth above, is August 12, 1996.

Copies of the full text of the Order are available from the Commission's Public Reference Branch, 888 First Street, NE., Washington, DC 20426.

Lois D. Cashell,

Secretary.

[FR Doc. 96–18902 Filed 7–24–96; 8:45 am]

BILLING CODE 6717–01–M

[Docket Nos. RM95–8–000, RM94–7–001, RM95–9–000]

Promoting Wholesale Competition Through Open Access Non-discriminatory Transmission Services by Public Utilities; Recovery of Stranded Costs by Public Utilities and Transmitting Utilities; Open Access Same-Time Information System (formerly Real-Time Information Networks) and Standards of Conduct; Notice of Filings Made Pursuant to Order Nos. 888 and 889

July 19, 1996.

Take notice that the entities shown on the Attachment submitted compliance filings (*e.g.*, compliance tariffs, ''good faith'' requests for waiver, and /or

informational filings) in accordance with the provisions of Order Nos. 888 and 889.[1] The vast majority of these compliance filings were submitted on July 9, 1996. In Order No. 888, as clarified, the Commission indicated that intervenors may raise any concerns with respect to these compliance filings within 30 days after each such filing.[2]

Any person desiring to be heard or to protest any of the filings listed in the attachment should file, in each particular proceeding and referencing the appropriate docket number, a motion to intervene or protest with the Federal Energy Regulatory Commission, 888 First Street, NE., Washington, DC 20426, in accordance with Rules 211 and 214 of the Commission's Rules of Practice and Procedure (18 CFR 385.211 and 18 CFR 385.214). *Unless otherwise noted on the Attachment,* all such motions or protests should be filed on or before August 8, 1996. Protests will be considered by the Commission in determining the appropriate action to be taken, but will not serve to make protestants parties to the proceeding. Any person wishing to become a party must file a motion to intervene.

Copies of the filings listed on the Attachment are on file with the Commission and are available for public inspection or are available on the Commission's Electronic Bulletin Board. Electronic filings are available in their original format in the Open Access Tariff Filings directory of the FERC Electric Power Data Bulletin Board, which can be reached at the same phone number as FERC CIPS (1–800–856–3920). The FERC Bulletin Board also can be accessed via the FedWorld system through dial-up modems or over the Internet.

By modem:

Dial 703–321–3339 and logon to the FedWorld system. After logging on to the FedWord system, choose f. Government and Regulatory and then type:/go FERC

By Internet:

Option 1
Telnet to: fedword. gov
Select [1] FedWorld option
Logon to the FedWorld system
Choose f. Government and Regulatory
Type: /go FERC

Option 2
Point your Web Browser to: http://www.fedworld.gov
Scroll down the page to select FedWorld Telnet Site
Select [1] FedWorld option
Logon to the FedWorld system
Choose f. Government and Regulatory
Type: /go FERC

Lois D. Cashell,

Secretary.

Attachment

OA96–1–000 Pacific Gas & Electric Company [1]
OA96–2–000 UNUSED
OA96–3–000 St. Joseph Light & Power Company [2]
OA96–4–000 Kansas City Power & Light Company [3]
OA96–5–000 Midwest Energy, Inc.[4]
OA96–6–000 Northern States Power Company (Minn. & Wisc.) [2]
OA96–7–000 Niagara Mohawk Power Corporation [5]
OA96–8–000 Upper Peninsula Power Company [5]
OA96–9–000 Pacificorp [5]
OA96–10–000 Tapoco, Inc.[6]
OA96–11–000 Long Sault, Inc.[6]
OA96–12–000 Yadkin, Inc.[6]
OA96–13–000 PECO Energy Company [5]
OA96–14–000 Central Hudson Gas & Electric Corporation [5]
OA96–15–000 Central Louisiana Electric Company, Inc.[6]
OA96–16–000 Idaho Power Company [6]
OA96–17–000 Oklahoma Gas & Electric Company [6]
OA96–18–000 Allegheny Power (Monongahela Power Company, *et al.*) [6]
OA96–19–000 Northeast Utilities Service Company [6]
OA96–20–000 Wisconsin Power & Light Company [6]
OA96–21–000 Public Service Company of Colorado, *et al.*[6]
OA96–22–000 Allegheny Power (Monongahela Power Company, *et al.*) [6]
OA96–23–000 Vermont Electric Power Company, Inc, *et al.*[6]
OA96–24–000 Bangor Hydro-Electric Company [6]
OA96–25–000 Black Creek Hydro, Inc.[6]
OA96–26–000 NewCorp Resources, Inc.[6]
OA96–27–000 Southern Company Services, Inc.
OA96–28–000 Pacific Gas & Electric Company
OA96–29–000 Northern States Power Company, *et al.*
OA96–30–000 Texas-New Mexico Power Company
OA96–31–000 Central Louisiana Electric Company, Inc.
OA96–32–000 Southern Company Services, Inc.
OA96–33–000 Southwestern Public Service Company
OA96–34–000 Texas-New Mexico Power Company
OA96–35–000 Maine Public Service Company
OA96–36–000 Central Illinois Light Company
OA96–37–000 Green Mountain Power Corporation
OA96–38–000 Long Island Lighting Company
OA96–39–000 Florida Power & Light Company
OA96–40–000 Montana-Dakota Utilities Company
OA96–41–000 Central Electric Cooperative, Inc.[6]
OA96–42–000 MidAmerican Energy Company
OA96–43–000 Central Maine Power Company
OA96–44–000 UGI Utilities, Inc.
OA96–45–000 Electric Energy, Inc.
OA96–46–000 Duke Power Company
OA96–47–000 Northern Indiana Public Service Company
OA96–48–000 Union Electric Company
OA96–49–000 South Carolina Electric & Gas Company
OA96–50–000 Union Electric Company
OA96–51–000 PUD No. 1 of Lewis County, WA [7]
OA96–52–000 Virginia Electric & Power Company
OA96–53–000 Central Vermont Public Service Corporation
OA96–54–000 New England Power Company
OA96–55–000 Public Service Company of New Mexico
OA96–56–000 Duquesne Light Company
OA96–57–000 Duquesne Light Company
OA96–58–000 Graham County Electric Cooperative, Inc.
OA96–59–000 Oregon Trail Electric Consumers Cooperative
OA96–60–000 Black Hills Corporation

[1] Promoting Wholesale Competition Through Open Access Non-discriminatory Transmission Services by Public Utilities and Recovery of Stranded Costs by Public Utilities and Transmitting Utilities, 61 Fed. Reg. 21,540 (May 10, 1996), FERC Stats. & Regs. ¶ 31,036 (1996) (Order No. 888); Open Access Same-Time Information System (formerly Real-Time Information Networks) and Standards of Conduct, 61 Fed. Reg. 21,737 (May 10, 1996), FERC Stats. & Regs. ¶ 31,037 (1996) (Order No. 889).

[2] Order Clarifying Order Nos. 888 and 889 Compliance Matters, 76 FERC ¶ 61,009 (July 2, 1996).

[1] This informational filing was made on June 24, 1996; comments are due on or before August 1, 1996, which is 30 days after the Commission's July 2, 1996 Order Clarifying Order Nos. 888 and 889 Compliance Matters in which the Commission first notified interested entities that they would have 30 days to respond to compliance filings.

[2] Filing was made on July 2, 1996; comments are due on or before August 1, 1996.

[3] This filing was originally noticed and docketed as ER96–1867–000. Comments in this proceeding were due on or before June 3, 1996. Redocketing does not change the procedural status of this proceeding.

[4] This filing for a limited waiver was made on June 10, 1996; comments are due on or before August 1, 1996, which is 30 days after the Commissions's July 2, 1996 Order Clarifying Order Nos. 888 and 889 Compliance Matters in which the Commission first notified interested entities that they would have 30 days to respond to compliance filings.

[5] Filing was made on July 5, 1996; comments are due on or before August 5, 1996.

[6] Filing was made on July 8, 1996; comments are due on or before August 7, 1996.

[7] This filing for a waiver of the reciprocity requirements was made on June 17, 1996; comments are due on or before August 1, 1996, which is 30 days after the Commission's July 2, 1996 Order Clarifying Order Nos. 888 and 889 Compliance Matters in which the Commission first notified interested entities that they would have 30 days to respond to compliance filings.

OA96–61–000 Black Hills Power & Light Company
OA96–62–000 Black Hills Power & Light Company
OA96–63–000 General Public Utilities (Jersey Central Power & Light Company, *et al.*)
OA96–64–000 Dayton Power & Light Company
OA96–65–000 Barron Electric Cooperative
OA96–66–000 Illinois Power Company
OA96–67–000 Montaup Electric Company
OA96–68–000 Sierra Pacific Power Company
OA96–69–000 UNUSED
OA96–70–000 Boston Edison Company
OA96–71–000 Madison Gas & Electric Company
OA96–72–000 St. Joseph Light & Power Company
OA96–73–000 Florida Power Corporation
OA96–74–000 New England Electric System
OA96–75–000 Black Hills Power and Light Company
OA96–76–000 Southern California Edison Company
OA96–77–000 Consumers Power Company
OA96–78–000 Detroit Edison Company
OA96–79–000 Wisconsin Public Service Corporation
OA96–80–000 Public Service Electric & Gas Company
OA96–81–000 Indianapolis Power & Light Company
OA96–82–000 Portland General Electric Company
OA96–83–000 Northeast Utilities Service Company
OA96–84–000 Commonwealth Edison Company
OA96–85–000 El Paso Electric Company
OA96–86–000 Allegheny Power
OA96–87–000 Delta-Montrose Electric Association
OA96–88–000 UNUSED
OA96–89–000 Virginia Electric & Power Company
OA96–90–000 Delmarva Power & Light Company
OA96–91–000 Central Vermont Public Service Corporation
OA96–92–000 Florida Power Corporation
OA96–93–000 Puget Sound Power & Light Company
OA96–94–000 UNUSED
OA96–95–000 Puget Sound Power & Light Company
OA96–96–000 Oklahoma Gas & Electric Company
OA96–97–000 Wake Electric Membership Corporation
OA96–98–000 Public Service Company of Colorado
OA96–99–000 Southern California Edison Company
OA96–100–000 Western Resources, Inc.
OA96–101–000 UtiliCorp United, Inc.
OA96–102–000 UtiliCorp United, Inc. (WVa)
OA96–103–000 Exeter & Hampton Electric Company
OA96–104–000 UNITIL Power Corporation
OA96–105–000 Concord Electric Company
OA96–106–000 UNITIL Power Corporation
OA96–107–000 Fitchburg Gas & Electric Light Company
OA96–108–000 Fitchburg Gas & Electric Light Company
OA96–109–000 Potomac Electric Power Company
OA96–110–000 MidAmerican Energy Company
OA96–111–000 Jones-Onslow Electric Membership Corporation
OA96–112–000 Detroit Edison Company
OA96–113–000 Southwestern Public Service Company
OA96–114–000 General Public Utilities (Jersey Central Power & Light Company, *et al.*
OA96–115–000 Mt. Carmel Public Utility Company
OA96–116–000 Tampa Electric Company
OA96–117–000 Southern Indiana Gas & Electric Company
OA96–118–000 Minnesota Power & Light Company, *et al.*
OA96–119–000 Potomac Electric Power Company
OA96–120–000 Potomac Electric Power Company
OA96–121–000 Arizona Public Service Company
OA96–122–000 Maine Public Service Company
OA96–123–000 Maine Public Service Company
OA96–124–000 Central Maine Power Company
OA96–125–000 IES Utilities Inc.
OA96–126–000 Ohio Valley Electric Corporation, *et al.*
OA96–127–000 Central Maine Power Company
OA96–128–000 UNUSED
OA96–129–000 Montana Power Company
OA96–130–000 Cambridge Electric Light Company
OA96–131–000 Dayton Power & Light Company
OA96–132–000 Concho Valley Electric Cooperative
OA96–133–000 Interstate Energy Corporation
OA96–134–000 Consumers Power Company
OA96–135–000 Dakota Electric Association
OA96–136–000 Southern Indiana Gas & Electric Company
OA96–137–000 Portland General Electric Company
OA96–138–000 Consolidated Edison Company of New York Inc.
OA96–139–000 San Diego Gas & Electric Company
OA96–140–000 Tucson Electric Power Company
OA96–141–000 Rochester Gas & Electric Company
OA96–142–000 Pennsylvania Power & Light Company
OA96–143–000 Golden Spread Electric Cooperative
OA96–144–000 Lower Valley Power & Light, Inc.
OA96–145–000 Stamford Electric Cooperative, Inc.
OA96–146–000 Niobrara Valley Electric Membership Corporation
OA96–147–000 Licking Rural Electrification Inc.
OA96–148–000 Rayburn County Electric Cooperative, Inc.
OA96–149–000 Anoka Electric Cooperative
OA96–150–000 Old Dominion Electric Cooperative, Inc.
OA96–151–000 Old Dominion Electric Cooperative, Inc.
OA96–152–000 Glacier Electric Cooperative, Inc.
OA96–153–000 Arizona Pubic Service Company
OA96–154–000 Central Illinois Public Service Company
OA96–155–000 Midwest Energy, Inc.
OA96–156–000 Baltimore Gas & Electric Company
OA96–157–000 United Illuminating Company
OA96–158–000 Entergy Services, Inc.
OA96–159–000 Atlantic City Electric Company
OA96–160–000 New England Electric Trans. Corporation, *et al.*
OA96–161–000 Puget Sound Power & Light Company
OA96–162–000 Washington Water Power Company
OA96–163–000 Lockhart Power Company
OA96–164–000 Minnesota Power & Light Company
OA96–165–000 Delmarva Power & Light Company
OA96–166–000 Commonwealth Edison Company, *et al.*
OA96–167–000 Commonwealth Electric Company
OA96–168–000 Seminole Electric Cooperative, Inc.
OA96–169–000 Cinergy Services, Inc., *et al.*
OA96–170–000 UNUSED
OA96–171–000 United Illuminating Company
OA96–172–000 UNUSED
OA96–173–000 Edison Sault Electric Company
OA96–174–000 UNUSED
OA96–175–000 Long Island Light Company
OA96–176–000 Tucson Electric Power Company
OA96–177–000 Jacksonville Electric Authority
OA96–178–000 Cambridge Electric Light Company
OA96–179–000 Nevada Power Company
OA96–180–000 Intermountain Rural Electric Association
OA96–181–000 People's Electric Cooperative
OA96–182–000 Consumers Power Company
OA96–183–000 American Electric Power System
OA96–184–000 Citizens Utilities Company
OA96–185–000 CSW Operating Cos. (Central Power & Light Company, *et al.*)
OA96–186–000 UtiliCorp United, Inc.
OA96–187–000 Wisconsin Electric Power Company
OA96–188–000 Nevada Power Company
OA96–189–000 Maine Electric Power Company
OA96–190–000 Ohio Valley Electric Cooperative, *et al.*

OA96–191–000 Bangor Hydro-Electric Company
OA96–192–000 Otter Tail Power Company
OA96–193–000 Kentucky Utilities Company
OA96–194–000 Niagara Mohawk Power Corporation
OA96–195–000 New York State Electric & Gas Corporation
OA96–196–000 Wisconsin Electric Power Company
OA96–197–000 Ohio Edison Company & Pennsylvania Power Company
OA96–198–000 Carolina Power & Light Company
OA96–199–000 Montana Power Company
OA96–200–000 El Paso Electric Company
OA96–201–000 UNUSED
OA96–202–000 Public Service Company of New Mexico
OA96–203–000 Western Resources, Inc.
OA96–204–000 Cleveland Electric Illuminating Company and Toledo Edison Company
OA96–205–000 CSW Operating Cos. (Central Power & Light Company, *et al.*)
OA96–206–000 Empire District Electric Company
OA96–207–000 Northwestern Public Service Company [8]
OA96–208–000 Louisville Gas & Electric Company [8]
OA96–209–000 Lee County Electric Cooperative, Inc.[8]
OA96–210–000 Orange and Rockland Utilities, Inc.[8]
OA96–211–000 Northwestern Wisconsin Electric Company [9]
OA96–212–000 Central Illinois Light Company [9]
OA96–213–000 Interstate Power Company [9]
OA96–214–000 Oklahoma Municipal Power Authority[6]

[FR Doc. 96–18901 Filed 7–24–96; 8:45 am]

BILLING CODE 6717–01–M

[8] Filing was made on July 10, 1996; comments are due on or before August 9, 1996.

[9] Filing was made on July 11, 1996; comments are due on or before August 12, 1996.

[Docket No. GT96–74–000]

Williams Natural Gas Company; Notice of Refund Report

July 19, 1996.

Take notice that on July 15, 1996, Williams Natural Gas Company (WNG) tendered for filing a report of refunds made to customers, pursuant to Commission order issued February 22, 1995, in Docket No. RP95–124–000.

WNG states that the February 22 order directed each pipeline receiving a refund from GRI to credit such refunds pro rata to its eligible firm customers, and within 15 days of making these credits, file a refund report with the Commission.

WNG states that the refund report reflects refunds of $71,414 made by WNG to its eligible firm customers on July 15, 1996.

WNG states that a copy of its filing was served on all customers receiving a refund and interested state commissions.

Any person desiring to be heard or to protest said filing should file a motion to intervene or protest with the Federal Energy Regulatory Commission, 888 First Street, NE, Washington, D.C. 20426, in accordance with Sections 385.211 and 385.214 of the Commission's Rules and Regulations. All such motions or protests must be filed on or before July 26, 1996. Protests will be considered by the Commission in determining appropriate action to be taken, but will not serve to make protestants parties to the proceedings. Any person wishing to become a party must file a motion to intervene. Copies of this filing are on file with the Commission and are available for public inspection in the Public Reference Room.

Lois D. Cashell,

Secretary.

[FR Doc. 96–18874 Filed 7–24–96; 8:45 am]

BILLING CODE 6717–01–M

ENVIRONMENTAL PROTECTION AGENCY

[FRL–5541–6]

Agency Information Collection Activities Under OMB Review; OMB #2060–0083; EPA #1127.05 and OMB Number: 2060–0004; EPA ICR Number: 0658.06

AGENCY: Environmental Protection Agency (EPA).

ACTION: Notice.

SUMMARY: In compliance with the Paperwork Reduction Act (44 U.S.C. 3507(a)(1)(D), this notice announces that the Information Collection Requests (ICRs) NSPS for Hot Mix Asphalt Facilities (Subpart I) and NSPS for Pressure Sensitive Tape and Label Surface Coating (Subpart RR)) described below have been forwarded to the Office of Management and Budget (OMB) for review and comment. The ICRs describe the nature of the information collections and their expected burden and cost; where appropriate, they include the actual data collection instruments.

DATES: Comments must be submitted on or before August 26, 1996.

FOR FURTHER INFORMATION OR A COPY CALL: Sandy Farmer at EPA, (202) 260–2740, and refer to EPA ICR No. 1127.05 or 0658.06.

SUPPLEMENTARY INFORMATION:

Title: Standards of Performance for Hot Mix Asphalt Facilities (OMB Control No. 2060–0083; EPA ICR No 1127.05). This is a request for extension of a currently approved collection.

Abstract: Owners/operators of hot mix asphalt facilities must notify EPA of construction, modification, startups, shut downs, date and results of initial performance test. The only type of industry costs associated with the information collection activity in the standards are labor costs. In order to ensure compliance with the standards promulgated to protect public health, adequate reporting and recordkeeping is necessary. In the absence of such information enforcement personnel would be unable to determine whether the standards are being met on a continuous basis, as required by the Clean Air Act.

An agency may not conduct or sponsor, and a person is not required to respond to, a collection of information unless it displays a currently valid OMB control number. The OMB control numbers for EPA's regulations are listed in 40 CFR Part 9 and 48 CFR Chapter 15. The Federal Register Notice required under 5 CFR 1320.8(d), soliciting comments on this collection of information was published on September 29, 1995.

Burden Statement: The annual public reporting and recordkeeping burden for this collection of information is estimated to average 4,611 hours. Burden means the total time, effort, or financial resources expended by persons to generate, maintain, retain, or disclose or provide information to or for a Federal agency. This includes the time needed to review instructions; develop, acquire, install, and utilize technology and systems for the purposes of collecting, validating, and verifying information, processing and maintaining information, and disclosing and providing information; adjust the existing ways to comply with any previously applicable instructions and requirements; train personnel to be able to respond to a collection of information; search data sources; complete and review the collection of information; and transmit or otherwise disclose the information.

Respondents/Affected Entities: Owners/operators of hot mix asphalt facilities.

Estimated Number of Respondents: 1370.

Frequency of Response: annually.

Estimated Number of Responses: 1370.

Estimated Total Annual Hour Burden: 4611 hours.

Estimated Total Annualized Cost Burden: $0.

Title: NSPS for Pressure Sensitive Tape and Label Surface Coating (Subpart RR); OMB Control No. 2060–0004; EPA ICR No. 0658.06. This is a request for extension of a currently approved collection.

Abstract: Owners and operators of facilities that manufacture pressure sensitive tape and labels must make the following onetime-only reports: notification of the date of construction or reconstruction; notification of the anticipated and actual dates of initial start-up; notification of any physical change to an existing facility that may increase the regulated pollutant emission rate; notification of initial performance test and the results of the initial performance test. Owners or operators are also required to maintain records of the occurrences and duration of any start-up, shut-down or malfunction in the operation of an affected facility, or any period during which the monitoring system is inoperative. These notifications, reports and records are required, in general, of all sources subject to NSPS.

Monitoring requirements specific to these coating operations consist of maintaining a calendar month record of all coatings used and their VOC content, the amount of solvent applied and recovered, and temperature of exhaust gases during incineration.

This collected information is used by the Agency to efficiently monitor industry compliance with NSPS. In the absence of collecting such information, continuous monitoring of compliance with the standards could be ensured only through continuous on-site inspections by regulatory agency personnel, which would be extremely costly.

An agency may not conduct or sponsor, and a person is not required to respond to, a collection of information unless it displays a currently valid OMB control number. The OMB control numbers for EPA's regulations are listed in 40 CFR Part 9 and 48 CFR Chapter 15. The Federal Register Notice required under 5 CFR 1320.8(d), soliciting comments on this collection of information was published on 3/26/96 (61 FR 13177). No comments were received.

Burden Statement: The annual public reporting and record keeping burden for this collection of information is estimated to average 6.3 hours per response. Burden means the total time, effort, or financial resources expended by persons to generate, maintain, retain, or disclose or provide information to or for a Federal agency. This includes the time needed to review instructions; develop, acquire, install, and utilize technology and systems for the purposes of collecting, validating, and verifying information, processing and maintaining information, and disclosing and providing information; adjust the existing ways to comply with any previously applicable instructions and requirements; train personnel to be able to respond to a collection of information; search data sources; complete and review the collection of information; and transmit or otherwise disclose the information.

Respondents/Affected Entities: owners and operators who manufacture pressure sensitive tape and labels.

Estimated Number of Respondents: 350.

Estimated Number of Responses: 724.

Frequency of Response: semiannual.

Estimated Total Annual Hour Burden: 36,302 hours.

Estimated Total Annualized Cost Burden: $0.

Send comments on the Agency's need for this information, the accuracy of the provided burden estimates, and any suggested methods for minimizing respondent burden, including through the use of automated collection techniques to the following addresses. Please refer to EPA ICR No. 1127.05 and OMB Control No. 2060–0083 or EPA ICR No. 0658.06 and OMB Control No. 2060–0004 in any correspondence.

Ms. Sandy Farmer, U.S. Environmental Protection Agency, OPPE Regulatory Information Division (2137), 401 M Street, SW, Washington, DC 20460.

and

Office of Information and Regulatory Affairs, Office of Management and Budget, Attention: Desk Officer for EPA, 725 17th Street, NW, Washington, DC 20503.

Dated: July 16, 1996.

Joseph Retzer,

Director, Regulatory Information Division.

[FR Doc. 96–18835 Filed 7–24–96; 8:45 am]

BILLING CODE 6560–50–U

[OPPTS–140246; FRL–5386–1]

Access to Confidential Business Information by Versar, Inc.

AGENCY: Environmental Protection Agency (EPA).

ACTION: Notice.

SUMMARY: EPA has authorized its contractor, Versar, Inc. (VER), of Springfield, Virginia, and Versar's subcontractors, General Science Corporation (GSC) of Laurel, Maryland, for access to information which has been submitted to EPA under sections 4, 5, 6, and 8 of the Toxic Substances Control Act (TSCA). Some of the information may be claimed or determined to be confidential business information (CBI).

DATES: Access to the confidential data submitted to EPA will occur no sooner than August 8, 1996.

FOR FURTHER INFORMATION CONTACT: Susan B. Hazen, Director, TSCA Environmental Assistance Division 7408, Office of Pollution Prevention and Toxics, Environmental Protection Agency, Rm. E–545, 401 M St., SW., Washington, DC 20460, (202) 554–1404, TDD: (202) 554–0551; e-mail: TSCA-Hotline@epamail.epa.gov.

SUPPLEMENTARY INFORMATION: Under contract number 68–W6–0023, contractor VER of 6850 Versar Center, Springfield, VA, and its subcontractors GSC of 6100 Chevy Chase Drive, Laurel, MD, will assist the Office of Pollution Prevention and Toxics (OPPT) in providing exposure assessment support for both new and existing chemicals.

In accordance with 40 CFR 2.306(j), EPA has determined that under EPA contract number 68–W6–0023, VER and GSC will require access to CBI submitted to EPA under sections 4, 5, 6, and 8 of TSCA to perform successfully the duties specified under the contract. VER and GSC personnel will be given access to information submitted to EPA under sections 4, 5, 6, and 8 of TSCA. Some of the information may be claimed or determined to be CBI.

In a previous notice published in the Federal Register of October 15, 1992 (57 FR 47336) VER and GSC were authorized for access to CBI submitted to EPA under sections 4, 5, 6, and 8 of TSCA. EPA is issuing this notice to extend VER and GSC access to TSCA CBI under the new contract number 68-W6-0023.

EPA is issuing this notice to inform all submitters of information under sections 4, 5, 6, and 8 of TSCA that EPA may provide VER and GSC, access to these CBI materials on a need-to-know basis only. All access to TSCA CBI under this contract will take place at EPA Headquarters and at VER's Springfield, VA site.

VER will be authorized access to TSCA CBI at its facility under the EPA *TSCA Confidential Business Information Security Manual.* GSC will be authorized access to TSCA CBI at EPA Headquarters only. Before access to TSCA CBI is authorized at VER's site, EPA will approve their security certification statement, perform the required inspection of its facility, and ensure that the facility is in compliance

with the manual. Upon completing review of the CBI materials, VER and GSC will return all transferred materials to EPA.

Clearance for access to TSCA CBI under this contract may continue until April 30, 1999.

VER and GSC personnel will be required to sign nondisclosure agreements and will be briefed on appropriate security procedures before they are permitted access to TSCA CBI.

List of Subjects

Environmental protection, Access to confidential business information.

Dated: July 16, 1996.

George A. Bonina,

Acting Director, Information Management Division, Office of Pollution Prevention and Toxics.

[FR Doc. 96–18842 Filed 7–24–96; 8:45 am]

BILLING CODE 6560–50–F

[OPPTS–140247; FRL–5386–2]

Access to Confidential Business Information by TMC Micrographic Services

AGENCY: Environmental Protection Agency (EPA).

ACTION: Notice.

SUMMARY: EPA has authorized its contractor Chemical Abstract Services (CAS), and its subcontractor TMC Micrographic Services (TMC), both of Columbus, Ohio for access to information which has been submitted to EPA under sections 5 and 8(b) of the Toxic Substances Control Act (TSCA). Some of the information may be claimed or determined to be confidential business information (CBI).

DATES: Access to the confidential data submitted to EPA will occur no sooner than August 8, 1996.

FOR FURTHER INFORMATION CONTACT: Susan B. Hazen, Director, Environmental Assistance Division (7408), Office of Pollution Prevention and Toxics, Environmental Protection Agency, Rm. E–545, 401 M St., SW., Washington, DC 20460, (202) 554–1404, TDD: (202) 554–0551; e-mail: TSCA-Hotline@epamail.epa.gov.

SUPPLEMENTARY INFORMATION: Under contract number 68–W5–0015, contractor CAS, of 2540 Olentangy River Road and its subcontractor TMC, of 2709 Sawbury Boulevard, Columbus, OH, will assist the Office of Pollution Prevention and Toxics (OPPT) in microfilming TSCA CBI materials.

In accordance with 40 CFR 2.306(j), EPA has determined that under EPA contract number 68–W5–0015, CAS and TMC will require access to CBI submitted to EPA under sections 5 and 8(b) of TSCA to perform successfully the duties specified under the contract microfilm and provide a permanent storage medium for the confidential data. CAS and TMC personnel will be given access to information submitted to EPA under sections 5 and 8(b) of TSCA. Some of the information may be claimed or determined to be CBI.

EPA is issuing this notice to inform all submitters of information under sections 5 and 8(b) of TSCA that EPA may provide CAS and TMC access to these CBI materials at CAS on a need-to-know basis only. All access to TSCA CBI under this contract will either take place at CAS's Columbus, OH facility or the subcontractor may take TSCA CBI materials to its facility for the purpose of microfilming, providing that the transfer of materials is done so only under direct supervision of a CAS official authorized for TSCA CBI access and that all TSCA CBI materials be returned daily to CAS's facility.

CAS and TMC will be authorized access to TSCA CBI at their facilities under the EPA *TSCA Confidential Business Information Security Manual.* Before access to TSCA CBI is authorized at CAS's site, EPA will approve CAS security certification statement, perform the required inspection of its facility, and ensure that the facility is in compliance with the manual. Upon completing review of the CBI materials, CAS will return all transferred materials to EPA.

Clearance for access to TSCA CBI under this contract may continue until June 30, 2000.

CAS and TMC personnel will be required to sign nondisclosure agreements and will be briefed on appropriate security procedures before they are permitted access to TSCA CBI.

List of Subjects

Environmental protection, Access to confidential business information.

Dated: July 16, 1996.

George A. Bonina,

Acting Director, Information Management Division, Office of Pollution Prevention and Toxics.

[FR Doc. 96–18843 Filed 7–24–96; 8:45 am]

BILLING CODE 6560–50–F

[OPP–66229; FRL 5384–4]

Notice of Receipt of Requests to Voluntarily Cancel Certain Pesticide Registrations

AGENCY: Environmental Protection Agency (EPA).

ACTION: Notice.

SUMMARY: In accordance with section 6(f)(1) of the Federal Insecticide, Fungicide and Rodenticide Act (FIFRA), as amended, EPA is issuing a notice of receipt of requests by registrants to voluntarily cancel certain pesticide registrations.

DATES: Unless a request is withdrawn by October 23, 1996, orders will be issued cancelling all of these registrations.

FOR FURTHER INFORMATION CONTACT: By mail: James A. Hollins, Office of Pesticide Programs (7502C), Environmental Protection Agency, 401 M St., SW., Washington, DC 20460. Office location for commercial courier delivery and telephone number: Room 216, Crystal Mall No. 2, 1921 Jefferson Davis Highway, Arlington, VA, (703) 305–5761; e-mail: hollins.james@epamail.epa.gov.

SUPPLEMENTARY INFORMATION:

I. Introduction

Section 6(f)(1) of the Federal Insecticide, Fungicide and Rodenticide Act (FIFRA), as amended, provides that a pesticide registrant may, at any time, request that any of its pesticide registrations be cancelled. The Act further provides that EPA must publish a notice of receipt of any such request in the Federal Register before acting on the request.

II. Intent to Cancel

This Notice announces receipt by the Agency of requests to cancel some 53 pesticide products registered under section 3 or 24(c) of FIFRA. These registrations are listed in sequence by registration number (or company number and 24(c) number) in the following Table 1.

TABLE 1.—REGISTRATIONS WITH PENDING REQUESTS FOR CANCELLATION

Registration No.	Product Name	Chemical Name
000016—00134	Dragon Ferbam Wettable Fungicide	Ferric dimethyldithiocarbamate
000100—00721	Funginex	*N,N'*-(1,4-Piperazinediylbis(2,2,2-trichloroethylidine)bis(formamide)
000100—00730	Triforine Technical	*N,N'*-(1,4-Piperazinediylbis(2,2,2-trichloroethylidine)bis(formamide)
000100 CA—82—0095	Funginex Emulsifiable Concentrate	*N,N'*-(1,4-Piperazinediylbis(2,2,2-trichloroethylidine)bis(formamide)
000100 OR—91—0017	Funginex	*N,N'*-(1,4-Piperazinediylbis(2,2,2-trichloroethylidine)bis(formamide)
000100 WI—93—0004	Funginex	*N,N'*-(1,4-Piperazinediylbis(2,2,2-trichloroethylidine)bis(formamide)
000241—00218	Cygon SC-9 Systemic Insecticide	*O,O*-Dimethyl *S*-((methylcarbamoyl)methyl)phosphorodithioate
000400 AZ—82—0010	Comite Agricultural Miticide	2-(*p*-tert-Butylphenoxy)cyclohexyl 2-propynyl sulfite
000400 CA—88—0012	Omite 6E Agricultural Miticide	2-(*p*-tert-Butylphenoxy)cyclohexyl 2-propynyl sulfite
000400 FL—85—0002	Omite CR AN Agricultural Miticide	2-(*p*-tert-Butylphenoxy)cyclohexyl 2-propynyl sulfite
000400 IL—94—0002	Omite 6E	2-(*p*-tert-Butylphenoxy)cyclohexyl 2-propynyl sulfite
000400 IN—88—0003	Omite 6E Agricultural Miticide	2-(*p*-tert-Butylphenoxy)cyclohexyl 2-propynyl sulfite
000400 MA—82—0005	Omite 6E	2-(*p*-tert-Butylphenoxy)cyclohexyl 2-propynyl sulfite
000400 ME—78—0006	Omite 6E Agricultural Miticide	2-(*p*-tert-Butylphenoxy)cyclohexyl 2-propynyl sulfite
000400 MO—88—0002	Omite 6E Agricultural Miticide	2-(*p*-tert-Butylphenoxy)cyclohexyl 2-propynyl sulfite
000400 NY—95—0003	Omite 6E	2-(*p*-tert-Butylphenoxy)cyclohexyl 2-propynyl sulfite
000400 OH—87—0001	Omite 6E Agricultural Miticide	2-(p-tert-Butylphenoxy)cyclohexyl 2-propynyl sulfite
000400 OR—87—0006	Omite CR AN Agricultural Miticide	2-(*p*-tert-Butylphenoxy)cyclohexyl 2-propynyl sulfite
000400 OR—88—0008	Omite 6E Agricultural Miticide	2-(*p*-tert-Butylphenoxy)cyclohexyl 2-propynyl sulfite
000400 OR—92—0020	Comite Agricultural Miticide	2-(*p*-tert-Butylphenoxy)cyclohexyl 2-propynyl sulfite
000400 PA—88—0003	Omite 6E Agricultural Miticide	2-(*p*-tert-Butylphenoxy)cyclohexyl 2-propynyl sulfite
000400 VA—88—0003	Omite 6E Agricultural Miticide	2-(*p*-tert-Butylphenoxy)cyclohexyl 2-propynyl sulfite
000400 VT—78—0001	Omite 6E Agricultural Miticide	2-(*p*-tert-Butylphenoxy)cyclohexyl 2-propynyl sulfite
000400 WA—88—0007	Omite 6E	2-(*p*-tert-Butylphenoxy)cyclohexyl 2-propynyl sulfite
000400 WA—92—0020	Omite-CR Agricultural Miticide	2-(*p*-tert-Butylphenoxy)cyclohexyl 2-propynyl sulfite
000400 WA—92—0032	Comite Agricultural Miticide	2-(*p*-tert-Butylphenoxy)cyclohexyl 2-propynyl sulfite
000400 WA—92—0036	Omite-30 WS Agricultural Miticide	2-(*p*-tert-Butylphenoxy)cyclohexyl 2-propynyl sulfite
000400 WA—92—0043	Omite-CR Agricultural Miticide	2-(*p*-tert-Butylphenoxy)cyclohexyl 2-propynyl sulfite
000400 WV—87—0001	Omite 6E Agricultural Miticide	2-(*p*-tert-Butylphenoxy)cyclohexyl 2-propynyl sulfite
000478—00080	Real Kill Yard & Patio Outdoor Fogger	2-Methyl-4-oxo-3-(2-propenyl)-2-cyclopenten-1-yl*d-trans*-2,2-dimethyl- 2-Hydroxyethyl octyl sulfide (5-Benzyl-3-furyl)methyl2,2-dimethyl-3-(2-methylpropenyl)cyclopropanecarboxylate
000524—00444	Greensweep Lawn Insecticide with Sevin Spray-On Liquid	1-Naphthyl-*N*-methylcarbamate
000769—00793	Superior Roach Spray Concentrate	Aliphatic petroleum hydrocarbons (Butylcarbityl)(6-propylpiperonyl) ether 80% andrelated compounds 20% Pyrethrins
000875—00150	Oxford Roach n Ant Killer	*N*-Octyl bicycloheptene dicarboximide *O,O*-Diethyl *O*-(2-isopropyl-6-methyl-4-pyrimidinyl)phosphorothioate (Butylcarbityl)(6-propylpiperonyl) ether 80% andrelated compounds 20% Pyrethrins
002382—00068	D-F-T Spray	Butoxypolypropylene glycol 1-Naphthyl-*N*-methylcarbamate
002382—00075	D-F-T Spray Plus	Butoxypolypropylene glycol 1-Naphthyl-*N*-methylcarbamate (Butylcarbityl)(6-propylpiperonyl) ether 80% andrelated compounds 20%

TABLE 1.—REGISTRATIONS WITH PENDING REQUESTS FOR CANCELLATION—Continued

Registration No.	Product Name	Chemical Name
		Pyrethrins
005197—00060	Thorokill D-12	*O,O*-Diethyl *O*-(2-isopropyl-6-methyl-4-pyrimidinyl)phosphorothioate
005905—00492	Setre Ziram 4 Lb. Flowable Fungicide	Zinc dimethyldithiocarbamate
009688—00050	Chemsico Residual Ant and Roach Killer with Repellents	2-Hydroxyethyl octyl sulfide *N*-Octyl bicycloheptene dicarboximide (Butylcarbityl)(6-propylpiperonyl) ether 80% andrelated compounds 20% Pyrethrins
009779—00182	Riverside 50% Sevin Concentrate Dust	1-Naphthyl-*N*-methylcarbamate
009779—00190	Riverside 5% Garden Dust	1-Naphthyl-*N*-methylcarbamate
010182—00254	Reward Selective Herbicide	*S*-Propyl dipropylthiocarbamate
010182 ID—92—0012	Karate Insecticide	(R+S)-alpha-Cyano-3-phenoxybenzyl(1S+1R)-cis-3-(*Z*-2-chloro-3,3,3-)
010807—00009	Mr. Misty Flying Insect Killer	Aliphatic petroleum hydrocarbons (5-Benzyl-3-furyl)methyl2,2-dimethyl-3-(2-methylpropenyl)cyclopropanecarboxylate
011715—00010	Speer Flea & Tick Spray	1-Naphthyl-*N*-methylcarbamate *N*-Octyl bicycloheptene dicarboximide (Butylcarbityl)(6-propylpiperonyl) ether 80% andrelated compounds 20% Pyrethrins
011715—00027	Speer Yard & Patio Repellent Fogger	2-Hydroxyethyl octyl sulfide (5-Benzyl-3-furyl)methyl2,2-dimethyl-3-(2-methylpropenyl)cyclopropanecarboxylate
011715—00095	Speer Fast Acting Wasp, Hornet & Yellow Jacket Killer	1-Naphthyl-*N*-methylcarbamate (Butylcarbityl)(6-propylpiperonyl) ether 80% andrelated compounds 20% Pyrethrins
011715—00152	Pet Guard Flea and Tick Spray for Dogs and Cats	1-Naphthyl-*N*-methylcarbamate *N*-Octyl bicycloheptene dicarboximide (Butylcarbityl)(6-propylpiperonyl) ether 80% andrelated compounds 20% Pyrethrins
015136—00006	Wavicide - 06	Glutaraldehyde
039793 VA—76—0014	Carboxide Sterilant-Fumigant Gas	Ethylene oxide
056228 KY—89—0003	Compound DRC-1339 98% Concentrate	3-Chloro-*p*-toluidine hydrochloride
062719—00028	Dursban Flea Spray for Dogs	*O,O*-Diethyl *O*-(3,5,6-trichloro-2-pyridyl)phosphorothioate
066676 OH—96—0001	Tree Guard	Benzyl diethyl ((2,6-xylylcarbamoyl)methyl) ammoniumbenzoate
066676 WI—94—0009	Tree Guard	Benzyl diethyl ((2,6-xylylcarbamoyl)methyl) ammoniumbenzoate

Unless a request is withdrawn by the registrant within 90 days of publication of this notice, orders will be issued cancelling all of these registrations. Users of these pesticides or anyone else desiring the retention of a registration should contact the applicable registrant directly during this 90-day period. The following Table 2 includes the names and addresses of record for all registrants of the products in Table 1, in sequence by EPA Company Number.

TABLE 2.—REGISTRANTS REQUESTING VOLUNTARY CANCELLATION

EPA Company No.	Company Name and Address
000016	Dragon Corp., Box 7311, Roanoke, VA 24019.
000100	Ciba-Geigy Corp., Box 18300, Greensboro, NC 27419.
000241	American Cyanamid Co., Agri Research Div - U.S. Regulatory Affairs, Box 400, Princeton, NJ 08543.
000400	Uniroyal Chemical Co., Inc.; 74 Amity Rd, Bethany, CT 06524.
000478	Realex, Div of United Industries Corp., Box 15842, St Louis, MO 63114.
000524	Monsanto Co., Agent For: Monsanto Agricultural Co., 700 14th St, N.W., Suite 1100, Washington, DC 20005.
000769	Sureco Inc., 10012 N. Dale Mabry, Suite 221, Tampa, FL 33618.

TABLE 2.—REGISTRANTS REQUESTING VOLUNTARY CANCELLATION—Continued

EPA Company No.	Company Name and Address
000875	Diversey Corp., 12025 Tech Center Dr., Livonia, MI 48150.
002382	Virbac Inc., Box 162059, Fort Worth, TX 76161.
005197	Systems General, Inc., Box 152170, Irving, TX 75015.
005905	Helena Chemical Co., 6075 Poplar Ave., Suite 500, Memphis, TN 38119.
009688	Chemsico, Div of United Industries Corp., Box 15842, St Louis, MO 63114.
009779	Riverside/Terra Corp., 600 Fourth St, Sioux City, IA 51101.
010182	Zeneca Ag Products, Box 15458, Wilmington, DE 19850.
010807	Amrep, Inc., 990 Industrial Dr., Marietta, GA 30062.
011715	Speer Products Inc., Box 18993, Memphis, TN 38181.
015136	Wave Energy Systems Inc., 25 Mansard Ct., Wayne, NJ 07470.
039793	VDACS, Office of Plant & Pest Services, Box 1163, Richmond, VA 23218.
056228	U.S. Department of Agriculture, Animal & Plant Health Inspection Service, 4700 River Rd., Unit 150, Riverdale, MD 20737.
062719	DowElanco, 9330 Zionsville Rd., 308/3E, Indianapolis, IN 46268.
066676	Nortech Forest Products Inc., 7600 W. 27th St., Suite B11, St Louis Park, MN 55426.

III. Procedures for Withdrawal of Request

Registrants who choose to withdraw a request for cancellation must submit such withdrawal in writing to James A. Hollins, at the address given above, postmarked before October 23, 1996. This written withdrawal of the request for cancellation will apply only to the applicable 6(f)(1) request listed in this notice. If the product(s) have been subject to a previous cancellation action, the effective date of cancellation and all other provisions of any earlier cancellation action are controlling. The withdrawal request must also include a commitment to pay any reregistration fees due, and to fulfill any applicable unsatisfied data requirements.

IV. Provisions for Disposition of Existing Stocks

The effective date of cancellation will be the date of the cancellation order. The orders effecting these requested cancellations will generally permit a registrant to sell or distribute existing stocks for 1 year after the date the cancellation request was received. This policy is in accordance with the Agency's statement of policy as prescribed in Federal Register No. 123, Vol. 56, dated June 26, 1991. Exceptions to this general rule will be made if a product poses a risk concern, or is in noncompliance with reregistration requirements, or is subject to a data call-in. In all cases, product-specific disposition dates will be given in the cancellation orders.

Existing stocks are those stocks of registered pesticide products which are currently in the United States and which have been packaged, labeled, and released for shipment prior to the effective date of the cancellation action. Unless the provisions of an earlier order apply, existing stocks already in the hands of dealers or users can be distributed, sold or used legally until they are exhausted, provided that such further sale and use comply with the EPA-approved label and labeling of the affected product(s). Exceptions to these general rules will be made in specific cases when more stringent restrictions on sale, distribution, or use of the products or their ingredients have already been imposed, as in Special Review actions, or where the Agency has identified significant potential risk concerns associated with a particular chemical.

List of Subjects

Environmental protection, Pesticides and pests, Product registrations

Dated: July 11, 1996.

Frank Sanders,

Director, Program Management and Support Division, Office of Pesticide Programs.

[FR Doc. 96–18844 Filed 7–24–96; 8:45 am]

BILLING CODE 6560–50–F

[OPP–340100; FRL 5383–8]

Notice of Receipt of Requests for Amendments to Delete Uses in Certain Pesticide Registrations

AGENCY: Environmental Protection Agency (EPA).

ACTION: Notice.

SUMMARY: In accordance with section 6(f)(1) of the Federal Insecticide, Fungicide and Rodenticide Act (FIFRA), as amended, EPA is issuing a notice of receipt of request for amendment by registrants to delete uses in certain pesticide registrations.

DATES: Unless a request is withdrawn, the Agency will approve these use deletions and the deletions will become effective on October 23, 1996.

FOR FURTHER INFORMATION CONTACT: By mail: James A. Hollins, Office of Pesticide Programs (7502C), Environmental Protection Agency, 401 M St., SW., Washington, DC 20460. Office location for commercial courier delivery and telephone number: Room 216, Crystal Mall No. 2, 1921 Jefferson Davis Highway, Arlington, VA, (703) 305–5761; e-mail: hollins.james@epamail.epa.gov.

SUPPLEMENTARY INFORMATION:

I. Introduction

Section 6(f)(1) of FIFRA provides that a registrant of a pesticide product may at any time request that any of its pesticide registrations be amended to delete one or more uses. The Act further provides that, before acting on the request, EPA must publish a notice of receipt of any such request in the Federal Register. Thereafter, the Administrator may approve such a request.

II. Intent to Delete Uses

This notice announces receipt by the Agency of applications from registrants to delete uses in the 16 pesticide registrations listed in the following Table 1. These registrations are listed by

registration number, product names, active ingredients and the specific uses deleted. Users of these products who desire continued use on crops or sites being deleted should contact the applicable registrant before October 23, 1996 to discuss withdrawal of the applications for amendment. This 90-day period will also permit interested members of the public to intercede with registrants prior to the Agency approval of the deletion.

TABLE 1.—REGISTRATIONS WITH REQUESTS FOR AMENDMENTS TO DELETE USES IN CERTAIN PESTICIDE REGISTRATIONS

EPA Registration No.	Product Name	Active Ingredient	Delete From Label
000004–00337	Bonide Insect Fog	Resmethrin	Campsites uses
000264–00324	SEVIN Brand 99% Technical Carbaryl Insecticide	Carbaryl	Avocados, grass for seed, maple trees for sap, okra, Oyster beds, prickly pear cactus
000432–00639	SBP-1382 Liquid Insecticide Spray 0.25% Formula III	Resmethrin	Outdoor thermal application in yards, patios, picnic areas, campsites, drive-ins, horse stables
000802–00442	Lilly/Miller Sevin 5% Dust	Carbaryl	Dog & cat uses
002270–00707	Excelcide Cold Fog	*N*-Octyl bicycloheptene dicarboximide; Piperonyl butoxide; Pyrethrins	Mushroom production and processing
003125–00404	DYLOX Technical Insecticide	Trichlorfon	Livestock uses
004581–00280	TOPSIN M Technical	Thiophanate-methyl	Sugarcane
004581–00322	TOPSIN-M 70WP	Thiophanate-methyl	Sugarcane
004581–00352	TOPSIN M 4.5 Turf & Ornamentals Fungicide	Thiophanate-methyl	Sugarcane
004581–00372	TOPSIN M 85 WDG	Thiophanate-methyl	Sugarcane
004581–00377	TOPSIN-M WSB	Thiophanate-methyl	Sugarcane
009779–00074	Riverside 5% Sevin Dust	Carbaryl	Use on pets
010182–00169	Vernam 10-G Selective Herbicide	Vernolate	Soybeans
010182–00221	Vernam 7-E Selective Herbicide	Vernolate	Soybeans
010807–00110	Misty Aqua-Kill Insec ticide	Resmethrin	Greenhouses
056228–00002	Gas Cartridge	Carbon; Sodium Nitrate	Pocket gopher

The following Table 2 includes the names and addresses of record for all registrants of the products in Table 1, in sequence by EPA company number.

TABLE 2.—REGISTRANTS REQUESTING AMENDMENTS TO DELETE USES IN CERTAIN PESTICIDE REGISTRATIONS

Company No.	Company Name and Address
000004	Bonide Products, Inc., 2 Wurz Avenue, Yorkville, NY 13495.
000264	Rhone-Poulenc Ag Company, P.O. Box 12014, T.W. Alexander Drive, Research Triangle Park, NC 27709.
000432	AgrEvo Environmental Health, 95 Chestnut Ridge Road, Montvale, NJ 07645.
000802	The Chas. H. Lilly Co., P.O. Box 83179, Portland, OR 97283.
002270	The Huge' Company, Inc., c/o F.P.I., 1902 Tomahawk Ridge, New Lenox, IL 60451.
003125	Bayer Corporation, P.O. Box 4913, 8400 Hawthorn Rd., Kansas City, MO 64120.
004581	Elf Atochem North America, Inc., 200 Market Street, Philadelphia, PA 19103.
009779	Riverside/Terra Corp., P.O. Box 6000, 600 4th Street, Sioux City, IA 51102.
010182	Zeneca Ag Products, 1800 Concord Pike, P.O. Box 15458, Wilmington, DE 19850.
010807	Amrep, Inc., 990 Industrial Park Drive, Marietta, GA 30062.
056228	U.S. Dept. of Agriculture, Animal & Plant Health Inspection Service, 4700 River Road, Unit 150, Riverdale, MD 20737.

III. Existing Stocks Provisions

The Agency has authorized registrants to sell or distribute product under the previously approved labeling for a period of 18 months after approval of the revision, unless other restrictions have been imposed, as in special review actions.

List of Subjects

Environmental protection, Pesticides and pests, Product registrations.

Dated: July 11, 1996.

Frank Sanders,

Director, Program Management and Support Division, Office of Pesticide Programs.

[FR Doc. 96–18845 Filed 7–24–96; 8:45 am]

BILLING CODE 6560–50–F

[PF–665; FRL–5384–8]

Pesticide Tolerance Petition; Notice of Filing by Abbott Laboratories

AGENCY: Environmental Protection Agency (EPA).

ACTION: Notice.

SUMMARY: This notice announces that EPA has received a pesticide petition for exemption from the requirement of tolerances for a certain pesticide ingredient to include all raw agricultural commodities.

DATES: Written comments, identified by the docket control number [PF–665], must be submitted to EPA by August 26, 1996.

ADDRESSES: By mail, submit written comments to: Public Response and Program Resources Branch, Field Operations Division (7506C), Office of Pesticide Programs, Environmental Protection Agency, 401 M St., SW., Washington, DC 20460. Comments and data may also be submitted electronically by sending electronic mail (e-mail) to: opp-docket@epamail.epa.gov. Electronic comments must be submitted as an ASCII file avoiding the use of special characters and any form of encryption. Comments and data will also be accepted on disks in WordPerfect 5.1 file format or ASCII file format. All comments and data in electronic form must be identified by docket number [PF–665]. No CBI should be submitted through e-mail. Electronic comments on this notice of filing may be filed online at many Federal Depository Libraries. Additional information on electronic submissions can be found in the SUPPLEMENTARY INFORMATION section of this document.

Information submitted as a comment concerning this document may be claimed confidential by marking any part or all of that information as ''Confidential Business Information'' (CBI). Information so marked will not be disclosed except in accordance with procedures set forth in 40 CFR part 2. A copy of the comment that does not contain CBI must be submitted for inclusion in the public record. Information not marked confidential may be disclosed publicly by EPA without prior notice. All written comments will be available for public inspection in Rm. 1132 at the address given above, from 8 a.m. to 4:30 p.m., Monday through Friday, excluding legal holidays.

FOR FURTHER INFORMATION CONTACT: Cindy Schaffer, Product Manager (PM) 90, Biopesticides and Pollution Prevention Division (7501W), Office of Pesticide Programs, Environmental Protection Agency, 401 M St., SW., Washington, DC 20460. Office location and telephone number: 5th Floor, CS #1, 2805 Jefferson Davis Hwy., Arlington, VA, 703–308–8272; e-mail address: schaffer.cindy@epamail.epa.gov.

SUPPLEMENTARY INFORMATION: This notice announces that EPA has received from Abbott Laboratories, Chemical and Agricultural Products Division, Dept. 28R Bldg A1, 1401 Sheridan Rd., North Chicago, IL 60064, a notice of filing of pesticide petition (PP) *6F4720* under section 408(d)(1) of the Federal Food, Drug, and Cosmetic Act (21 U.S.C. 346a), proposing to amend 40 CFR part 180 by establishing tolerances for the residues of the microbial pesticide *Bacillus sphaericus*, strain 2362 (serotype H5a5b) (larvicide) in or on all raw agricultural commodities. The proposed analytical method for determining residues is by gas chromatography.

A record has been established for this notice of filing under docket number [PF–665] (including comments and data submitted electronically as described below). A public version of this record, including printed, paper versions of electronic comments, which does not include any information claimed as CBI, is available for inspection from 8 a.m. to 4:30 p.m., Monday through Friday, excluding legal holidays. The public record is located in Rm. 1132 of the Public Response and Program Resources Branch, Field Operations Division (7506C), Office of Pesticide Programs, Environmental Protection Agency, Crystal Mall #2, 1921 Jefferson Davis Hwy., Arlington, VA.

Electronic comments can be sent directly to EPA at:

opp-docket@epamail.epa.gov

Electronic comments must be submitted as an ASCII file avoiding the use of special characters and any form of encryption.

The official record for this notice of filing, as well as the public version, as described above will be kept in paper form. Accordingly, EPA will transfer all comments received electronically into printed, paper form as they are received and will place the paper copies in the official rulemaking record which will also include all comments submitted directly in writing. The official record is the paper record maintained at the address in ''ADDRESSES'' at the beginning of this document.

List of Subjects

Environmental protection, Agricultural commodities, Feed additives, Food additives, Pesticides and pests, Reporting and recordkeeping requirements.

Authority: 21 U.S.C. 346a.

Dated: July 10, 1996.

Flora Chow,

Acting Director, Biopesticides and Pollution Prevention Division, Office of Pesticide Programs.

[FR Doc. 96–18841 Filed 7–24–96; 8:45 am]

BILLING CODE 6560–50–F

[FRL–5541–9]

Proposed Settlement Under Section 122(h) of the Comprehensive Environmental Response, Compensation and Liability Act of 1980 (CERCLA), as Amended, 42 U.S.C. Section 9622(h), in the Matter of the L.H. Inc. Site, Cambridge, Guernsey County, OH

AGENCY: The Environmental Protection Agency.

ACTION: Notice of proposed administrative settlement and request for public comment.

SUMMARY: The Environmental Protection Agency (EPA) is hereby giving notice that it proposes to enter into an administrative settlement for recovery of past response costs that it has incurred in connection with removal activities performed for the L.H. Inc. Site. The L.H. Inc. Site is located at 1502 Beckett Avenue, Cambridge, Guernsey County, Ohio. The proposed settlement is with Janice C. Barricklow and Phyllis L. Snedegar, and will resolve their liability, pursuant to Section 107(a) of CERCLA, for EPA's past response costs incurred in connection with the L.H. Inc. Site. This notice of the opportunity to file written comments on the proposed administrative settlement is being provided pursuant to Section 122(i) of CERCLA, 42 U.S.C. Section 9622(i).

DATES: Comments must be provided on or before August 26, 1996.

ADDRESSES: Comments should be addressed to Jacqueline Kline, Office of Regional Counsel, Mail Code C–29A, U.S. Environmental Protection Agency, Region 5, 77 West Jackson Boulevard, Chicago, Illinois, 60604–3590, and should refer to: In the Matter of L.H. Inc. Site, U.S. EPA Docket No. V–W–92–C–168.

FOR FURTHER INFORMATION CONTACT: Jacqueline Kline, Office of Regional Counsel, Mail Code C–29A, U.S. Environmental Protection Agency, 77 West Jackson Boulevard, Chicago, Illinois 60604–3590, (312) 886–7167.

SUPPLEMENTARY INFORMATION: The L.H. Inc. Site consisted of three lagoons on approximately one-third acre in an area of mixed industrial and residential land use. The lagoons had been used for the treatment of spent pickle liquor generated by the steel industry, a hazardous waste. L.H. Inc., an Ohio corporation, conducted the hazardous waste treatment activities without the necessary permit during 1980. Phyllis L. Snedegar and Janice C. Barricklow were officers and directors of L.H. Inc. During 1985, after an administrative law judge had ordered L.H. Inc. to properly close the facility at 1502 Beckett Avenue, Cambridge, Ohio, L.H. Inc. declared bankruptcy. The facility was not properly closed.

A site assessment conducted by EPA during 1991 revealed that sludges in two of the three lagoons were characteristic hazardous waste owing to the high chromium content of the sludges. On October 13, 1992, EPA issued a unilateral administrative order to Phyllis L. Snedegar, Janice C. Barricklow, and another individual, ordering them to conduct certain removal activities at the L.H. Inc. Site in order to eliminate threats to public health, welfare, or the environment. The order found that exposure to the hazardous waste in the lagoon was possible because the lagoons were not secure and because weather conditions could result in their overflowing. During 1993 Snedegar and Barricklow performed the removal activities, removing and properly disposing of the lagoon contents, sampling the area near the lagoons, and backfilling the lagoons with clean soil. EPA does not expect that further removal actions will be necessary at the L.H. Inc. Site.

The proposed administrative settlement agreement provides for Snedegar and Barricklow to pay to EPA $12,000, which is approximately one-fifth of EPA's unreimbursed past response costs for the L.H. Inc. Site. Effective upon receipt of payment, EPA covenants not to sue Snedegar and Barricklow for the remainder of EPA's past Site response costs.

EPA is entering into these agreements under the authority of Sections 107 and 122(h) of CERCLA. Section 122(h) authorizes EPA to enter into administrative settlements with potentially responsible parties for the recovery of EPA's past costs where such claims have not been referred to the Department of Justice for further action.

The Environmental Protection Agency will receive written comments relating to this agreement for thirty days from the date of publication of this notice.

Authority: The Comprehensive Environmental Response, Compensation, and Liability Act of 1980, as amended, 42 U.S.C. Sections 9601 *et seq.*

William E. Muno,

Director, Superfund Division.

[FR Doc. 96–18840 Filed 7–24–96; 8:45 am]

BILLING CODE 6560–50–M

FEDERAL ELECTION COMMISSION

Sunshine Act Meeting

AGENCY: Federal Election Commission.

"FEDERAL REGISTER" NUMBER: 96–18436.

PREVIOUSLY ANNOUNCED DATE AND TIME: Thursday, July 25, 1996, 10:00 a.m. Meeting Open to the Public.

This meeting has been canceled.

DATE AND TIME: Tuesday, July 30, 1996 at 10:00 a.m.

PLACE: 999 E Street, N.W., Washington, D.C.

STATUS: This Meeting Will Be Closed to the Public.

ITEMS TO BE DISCUSSED:

Compliance matters pursuant to 2 U.S.C. § 437g.
Audits conducted pursuant to 2 U.S.C. § 437g, § 438(b), and Title 26, U.S.C.
Matters concerning participation in civil actions or proceedings or arbitration
Internal personnel rules and procedures or matters affecting a particular employee

DATE AND TIME: Thursday, August 1, 1996 at 10:00 a.m.

PLACE: 999 E Street, N.W. Washington, D.C. (Ninth Floor.)

STATUS: This meeting Will Be Open to the Public.

ITEMS TO BE DISCUSSED:

Correction and Approval of Minutes
Advisory Opinion 1996–25: Stanley M. Brand on behalf of Seafarers Political Activity Donation ("SPAD") (originally scheduled for the meeting of July 25, 1996)
Advisory Opinion 1996–28: Richard W. Shaffer on behalf of the Lehigh Valley Citizens for Con Ritter (originally scheduled for the meeting of July 25, 1996)
Final Audit Report on Abraham for Senate
Independent Expenditures by Party Committees—Notice of Final Rule and Technical Amendment (11 CFR § 110.7); Notice of Availability (11 CFR Part 109 and § 110.7)
Electronic Filing—Final Rule (tentative)
Administrative Matters

PERSON TO CONTACT FOR INFORMATION: Mr. Ron Harris, Press Officer., Telephone: (202) 219–4155.

Delores Hardy,

Administrative Assistant.

[FR Doc. 96–19072 Filed 7–23–96; 3:12 pm]

BILLING CODE 6715–01–M

FEDERAL EMERGENCY MANAGEMENT AGENCY

[FEMA–1125–DR]

Indiana; Major Disaster and Related Determinations

AGENCY: Federal Emergency Management Agency (FEMA).

ACTION: Notice.

SUMMARY: This is a notice of the Presidential declaration of a major disaster for the State of Indiana (FEMA–1125–DR), dated July 3, 1996, and related determinations.

EFFECTIVE DATE: July 3, 1996.

FOR FURTHER INFORMATION CONTACT: Pauline C. Campbell, Response and Recovery Directorate, Federal Emergency Management Agency, Washington, DC 20472, (202) 646–3606.

SUPPLEMENTARY INFORMATION: Notice is hereby given that, in a letter dated July 3, 1996, the President declared a major disaster under the authority of the Robert T. Stafford Disaster Relief and Emergency Assistance Act (42 U.S.C. 5121 *et seq.*), as follows:

I have determined that the damage in certain areas of the State of Indiana, resulting from severe storms and flooding beginning on April 28, 1996, through May 25, 1996, is of sufficient severity and magnitude to warrant a major disaster declaration under the Robert T. Stafford Disaster Relief and Emergency Assistance Act ("the Stafford Act"). I, therefore, declare that such a major disaster exists in the State of Indiana.

In order to provide Federal assistance, you are hereby authorized to allocate from funds available for these purposes, such amounts as you find necessary for Federal disaster assistance and administrative expenses.

You are authorized to provide Individual Assistance, Public Assistance, and Hazard Mitigation in the designated areas. Consistent with the requirement that Federal assistance be supplemental, any Federal funds provided under the Stafford Act for Public Assistance or Hazard Mitigation will be limited to 75 percent of the total eligible costs.

The time period prescribed for the implementation of section 310(a), Priority to Certain Applications for Public Facility and Public Housing Assistance, 42 U.S.C. 5153, shall be for a period not to exceed six months after the date of this declaration.

Notice is hereby given that pursuant to the authority vested in the Director of the Federal Emergency Management Agency under Executive Order 12148, I hereby appoint Dante Roveda of the Federal Emergency Management Agency to act as the Federal Coordinating Officer for this declared disaster.

I do hereby determine the following areas of the State of Indiana to have

been affected adversely by this declared major disaster:

Harrison and Lawrence Counties for Individual Assistance and Hazard Mitigation; and,

Crawford, Dearborn, Franklin, Martin, Orange, Vanderburgh, Warrick and Washington Counties for Individual Assistance, Public Assistance and Hazard Mitigation; and,

Brown, Daviess, Dekalb, Dubois, Gibson, Jefferson, Knox, Montgomery, Ohio, Perry, Pike, Posey, Putnam, Ripley, Sullivan, Steuben, Switzerland, Union, and Whitley Counties for Public Assistance and Hazard Mitigation.

(Catalog of Federal Domestic Assistance No. 83.516, Disaster Assistance.)

James L. Witt,

Director.

[FR Doc. 96–18931 Filed 7–24–96; 8:45 am]

BILLING CODE 6718–02–P

[FEMA–1116–DR]

Minnesota; Amendment to Notice of a Major Disaster Declaration

AGENCY: Federal Emergency Management Agency (FEMA).

ACTION: Notice.

SUMMARY: This notice amends the notice of a major disaster for the State of Minnesota (FEMA–1116–DR), dated June 1, 1996, and related determinations.

EFFECTIVE DATE: July 9, 1996.

FOR FURTHER INFORMATION CONTACT: Pauline C. Campbell, Response and Recovery Directorate, Federal Emergency Management Agency, Washington, DC 20472, (202) 646–3606.

SUPPLEMENTARY INFORMATION: Notice is hereby given that the incident period for this disaster is March 14, 1996 to June 1, 1996.

(Catalog of Federal Domestic Assistance No. 83.516, Disaster Assistance.)

William C. Tidball,

Associate Director, Response and Recovery Directorate.

[FR Doc. 96–18932 Filed 7–24–96; 8:45 am]

BILLING CODE 6718–02–P

[FEMA–3118–DR]

Oklahoma; Amendment to Notice of an Emergency Declaration

AGENCY: Federal Emergency Management Agency (FEMA).

ACTION: Notice.

SUMMARY: This notice amends the notice of an emergency for the State of Oklahoma (FEMA–3118–DR), dated February 27, 1996, and related determinations.

EFFECTIVE DATE: July 17, 1996.

FOR FURTHER INFORMATION CONTACT: Pauline C. Campbell, Response and Recovery Directorate, Federal Emergency Management Agency, Washington, DC 20472, (202) 646–3606.

SUPPLEMENTARY INFORMATION: Notice is hereby given that the incident period for this emergency is closed effective May 31, 1996.

(Catalog of Federal Domestic Assistance No. 83.516, Disaster Assistance.)

William C. Tidball,

Associate Director, Response and Recovery Directorate.

[FR Doc. 96–18928 Filed 7–24–96; 8:45 am]

BILLING CODE 6718–02–P

[FEMA–1126–DR]

U.S. Virgin Islands; Major Disaster and Related Determinations

AGENCY: Federal Emergency Management Agency (FEMA).

ACTION: Notice.

SUMMARY: This is a notice of the Presidential declaration of a major disaster for the U.S. Virgin Islands (FEMA–1126–DR), dated July 11, 1996, and related determinations.

EFFECTIVE DATE: July 11, 1996.

FOR FURTHER INFORMATION CONTACT: Pauline C. Campbell, Response and Recovery Directorate, Federal Emergency Management Agency, Washington, DC 20472, (202) 646–3606.

SUPPLEMENTARY INFORMATION: Notice is hereby given that, in a letter dated July 11, 1996, the President declared a major disaster under the authority of the Robert T. Stafford Disaster Relief and Emergency Assistance Act (42 U.S.C. 5121 *et seq.*), as follows:

I have determined that the damage in certain areas of the Territory of the U. S. Virgin Islands resulting from Hurricane Bertha on July 8–9, 1996, is of sufficient severity and magnitude to warrant a major disaster declaration under the Robert T. Stafford Disaster Relief and Emergency Assistance Act (''the Stafford Act''). I, therefore, declare that such a disaster exists in the Territory of the U.S. Virgin Islands.

In order to provide Federal assistance, you are hereby authorized to allocate from funds available for these purposes, such amounts as you find necessary for Federal assistance and administrative expenses.

You are authorized to provide Individual Assistance and Hazard Mitigation Assistance in the designated areas. Further, you may provide reimbursement for debris removal and emergency protective measures under the Public Assistance program. Additional categories of assistance may be provided under Public Assistance, if warranted. Consistent with the requirement that Federal assistance be supplemental, any Federal funds provided under the Stafford Act for Public Assistance or Hazard Mitigation will be limited to 75 percent of the total eligible costs.

The time period prescribed for the implementation of section 310(a), Priority to Certain Applications for Public Facility and Public Housing Assistance, 42 U.S.C. 5153, shall be for a period not to exceed six months after the date of this declaration.

Notice is hereby given that pursuant to the authority vested in the Director of the Federal Emergency Management Agency under Executive Order 12148, I hereby appoint Barbara Russell of the Federal Emergency Management Agency to act as the Federal Coordinating Officer for this declared disaster.

I do hereby determine the following areas of the U.S. Virgin Islands to have been affected adversely by this declared major disaster:

St. Croix, St. John, and St. Thomas for Individual Assistance, Hazard Mitigation and reimbursement for debris removal and emergency protective measures under the Public Assistance program.

(Catalog of Federal Domestic Assistance No. 83.516, Disaster Assistance)

James L. Witt,

Director.

[FR Doc. 96–18930 Filed 7–24–96; 8:45 am]

BILLING CODE 6718–02–P

[FEMA–REP–I–RI–96–0001]

Rhode Island Ingestion Pathway Plan

AGENCY: Federal Emergency Management Agency (FEMA).

ACTION: Notice.

SUMMARY: FEMA gives notice of a request for review, evaluation and approval of the State of Rhode Island Ingestion Pathway Plan for Haddam Neck Nuclear Power Station and Millstone Nuclear Power Station in Connecticut and Pilgrim Nuclear Power Station in Massachusetts, and requests comments on the document.

DATES: Comments and responses should be sent no later than October 23, 1996.

ADDRESSES: Comments on Rhode Island Ingestion Pathway Plan should be sent to the Rules Docket Clerk, Office of the General Counsel, room 840, Federal Emergency Management Agency, 500 C Street SW., Washington, DC 20472, (facsimile) (202) 646–4536.

Copies of the Ingestion Pathway Plan are available for review and copying at the FEMA Region I Office, or are available upon request in accordance

with the fee schedule for FEMA Freedom of Information Act requests. The Plan is 367 pages long; reproduction fees are $0.15 cents per page, or $55.05 for the entire Plan, payable in advance.

FOR FURTHER INFORMATION CONTACT: Daniel C. McElhinny, Regional Assistance Committee Chairman, room 401, Federal Emergency Management Agency, Region I, J.W. McCormack Post Office and Court House, Boston, MA 02109, (617) 223–4182.

SUPPLEMENTARY INFORMATION: The State of Rhode Island has formally submitted its radiological emergency response plan for response to accidents at the Haddam Neck, Millstone and Pilgrim Nuclear Power Stations. The initial State Plan was submitted to FEMA in 1978; it was resubmitted with amendments in May of 1995; and was submitted again in April of 1996 with the State's formal request for FEMA's review, evaluation and approval of the State Plan.

The policies and procedures for FEMA's review, evaluation and approval process on the adequacy of offsite plans and preparedness are published at 44 CFR 350. FEMA findings and determinations, made under this rule, are provided to the Nuclear Regulatory Commission (NRC) for its use in making Commission findings of the adequacy of offsite plans and preparedness and in making licensing decisions on authorizing full-power operation of commercial nuclear power plants. We welcome your comments on this plan.

Dated: July 19, 1996.

Kay C. Goss,

Associate Director for Preparedness, Training, and Exercises.

[FR Doc. 96–18929 Filed 7–24–96; 8:45 am]

BILLING CODE 6718–06–P

FEDERAL MARITIME COMMISSION

Ocean Freight Forwarder License; Applicants

Notice is hereby given that the following applicants have filed with the Federal Maritime Commission applications for licenses as ocean freight forwarders pursuant to section 19 of the Shipping Act of 1984 (46 U.S.C. app. 1718 and 46 CFR Part 510).

Persons knowing of any reason why any of the following applicants should not receive a license are requested to contact the Office of Freight Forwarders, Federal Maritime Commission, Washington, D.C. 20573.

Prestige Trade Services, Inc., 3400 McIntosh Road, Building A, Door 3, Ft. Lauderdale, FL 33316, Officers: James Batalini, President, Edward Harrington, Vice President

Logistics Management International, Inc., 816 Thorndale Avenue, Bensenville, IL 60106, Officers: Michael Rosenzweig, President, Vince Homes, Vice President

United Shipping Agent, Inc., 15 Penn Plaza, Suite 107, New York, NY 10001, Officer: Mohamed Abouelmaati, President

Alpha Brokers Corp., 9600 N.W. 25th Street, Suite #7A, Miami, FL 33172, Officers: Sergio S. Lozano, President, Antonio Lozano, Vice President

International Logistics Corporation, 1701 Quincy Avenue, Naperville, IL 60540, Officers: John D. Staton, President, Mark C. Goss, Exec. Vice President

Dated: July 19, 1996.

Joseph C. Polking,

Secretary.

[FR Doc. 96–18848 Filed 7–24–96; 8:45 am]

BILLING CODE 6730–01–M

Ocean Freight Forwarder License; Applicants

Notice is hereby given that the following applicants have filed with the Federal Maritime Commission applications for licenses as ocean freight forwarders pursuant to section 19 of the Shipping Act of 1984 (46 U.S.C. app. 1718 and 46 CFR 510).

Persons knowing of any reason why any of the following applicants should not receive a license are requested to contact the Office of Freight Forwarders, Federal Maritime Commission, Washington, D.C. 20573.

Westrans Air Express, 713 S. Hindry Avenue, Inglewood, CA 90301, Officers: Anthony Tan, President, Steve Lok, Vice President

Sea Inland Air International Inc., 7997 NW 21st Street, Miami, FL 33126, Officer: Henry Zaldivar, President

Allstates Air Cargo, Inc., #4 Lakeside Drive South, Forked River, NJ 08731, Officers: Joseph M. Guido, President, Tammy M. Sandridge, Vice President

International Frontier Forwarders, 10575 Katy Freeway, Suite 400, Houston, TX 77024, Jose Gregoria Diaz, Sole Proprietor

John J. Clarke, 359 N. Oak Street, Inglewood, CA 90302, Sole Proprietor

Dated: July 19, 1996.

Joseph C. Polking,

Secretary.

[FR Doc. 96–18854 Filed 7–24–96; 8:45 am]

BILLING CODE 6730–01–M

Notice of Agreement(s) Filed

The Federal Maritime Commission hereby gives notice of the filing of the following agreement(s) pursuant to section 5 of the Shipping Act of 1984.

Interested parties may inspect and obtain a copy of each agreement at the Washington, D.C. Office of the Federal Maritime Commission, 800 North Capitol Street, N.W., 9th Floor. Interested parties may submit comments on each agreement to the Secretary, Federal Maritime Commission, Washington, D.C. 20573, within 10 days after the date of the Federal Register in which this notice appears. The requirements for comments are found in § 572.603 of Title 46 of the Code of Federal Regulations. Interested persons should consult this section before communicating with the Commission regarding a pending agreement.

Agreement No.: 203–011494–001

Title: TMM/Contship Space Charter and Sailing Agreement

Parties:

Transportacion Maritima Mexicana, S.A. de C.V.

Contship Containerlines Limited

Synopsis: The proposed amendment (1) adds Lykes Bros. Steamship Co., Inc. as a party; (2) deletes the scope of the Agreement to cover only Atlantic Coast ports in Florida; (3) revises Article 5.2(d) to require that two of the parties consent to the third party making vessel space available to non-parties; (4) deletes the authority of the parties to discuss and agree upon rates; (5) adds a new Article 5.8—Other Services; (6) revises Article 7.2 to provide for a notice period of six months in the event of a party's resignation (except Lykes may resign on 90 days' notice given not sooner than 90 days after the effective date of Amendment No. 1); (7) revises Article 9 by deleting the minimum duration of the Agreement; (8) revises the language of Articles 7.1, 8 and 13.2 to reflect that there are now three parties to the Agreement; (9) and republishes the Agreement.

Agreement No.: 203–011531–001

Title: Wilhelmsen/AADL/Safbank/Lykes Space Charter and Sailing Agreement

Parties:

America-Africa-Delmas Line (AADL)

Lykes Bros. Steamship Co., Inc.

Safbank Line Limited

Wilhelmsen Lines A/S

Synopsis: The proposed amendment deletes the August 31, 1996 expiration date and extends the terms of the Agreement indefinitely. The parties have requested a shortened review period.

Agreement No.: 203–011549

Title: ABC Discussion Agreement
Parties:
Aruba Bonaire Curacao Liner Association
Evergreen Marine Corp. (Taiwan) Ltd.
Synopsis: The proposed Agreement permits the parties to meet, exchange information, discuss their separate tariffs, general rate levels, service items, rules and service contracts, charges, classifications, practices, terms, conditions and rules and regulations applicable to transportation in the trade between ports in the contiguous United States and ports in Aruba, Bonaire and Curacao, Netherlands Antilles.

Dated: July 22, 1996.

By Order of the Federal Maritime Commission.

Joseph C. Polking,

Secretary.

[FR Doc. 96–18924 Filed 7–24–96; 8:45 am]

BILLING CODE 6730–01–M

Notice of Agreement(s) Filed

The Federal Maritime Commission hereby give notice that the following agreement(s) has been filed with the Commission for approval pursuant to section 15 of the Shipping Act, 1916, as amended (39 Stat. 733, 75 Stat. 763, 46 U.S.C. § 814).

Interested parties may inspect and may request a copy of each agreement and the supporting statement at the Washington, D.C. Office of the Federal Maritime Commission, 800 North Capitol Street, NW., Room 1046. Interested parties may submit protests or comments on each agreement to the Secretary, Federal Maritime Commission, Washington, DC 20573, within 10 days after the date of the Federal Register in which this notice appears. The requirements for comments and protests are found in section 560.7 of Title 46 of the Code of Federal Regulations. Interested persons should consult this section before communicating with the Commission regarding a pending agreement.

Any person filing a comment or protest with the Commission shall, at the same time, deliver a copy of that document to the person filing the Agreement at the address shown below.

Agreement No.: 224–003565–006
Title: Puerto Rico Ports Authority/Sea-Land Service, Inc. Terminal Agreement
Parties:
Puerto Rico Ports Authority Sea-Land Service, Inc.
Filing Agent: Ms. Mayra N. Cruz Alvarez, Contracts Supervisor, Puerto Rico Ports Authority, P.O. Box 362829, San Juan, Puerto Rico 00936–2829
Synopsis: The proposed amendment adjusts the square footage of building space, the monthly rental for the use of the preferential area, the daily penalty and the security payment for rental.

Dated: July 22, 1996.

By Order of the Federal Maritime Commission.

Joseph C. Polking,

Secretary.

[FR Doc. 96–18926 Filed 7–24–96; 8:45 am]

BILLING CODE 6730–01–M

Security for the Protection of the Public Indemnification of Passengers for Nonperformance of Transportation; Notice of Issuance of Certificate (Performance)

Notice is hereby given that the following have been issued a Certificate of Financial Responsibility for Indemnification of Passengers for Nonperformance of Transportation pursuant to the provisions of section 3, Public Law 89–777 (46 U.S.C. 817(e)) and the Federal Maritime Commission's implementing regulations at 46 CFR Part 540, as amended.

Seabourn Cruise Line Limited and Seabourn Maritime Management A/S, 55 Francisco Street, San Francisco, California 94133

Vessel: SEABOURN LEGEND

Dated: July 22, 1996.

Joseph C. Polking,

Secretary.

[FR Doc. 96–18925 Filed 7–24–96; 8:45 am]

BILLING CODE 6730–01–M

FEDERAL RESERVE SYSTEM

Formations of, Acquisitions by, and Mergers of Bank Holding Companies

The companies listed in this notice have applied to the Board for approval, pursuant to the Bank Holding Company Act of 1956 (12 U.S.C. 1841 *et seq.*) (BHC Act), Regulation Y (12 CFR Part 225), and all other applicable statutes and regulations to become a bank holding company and/or to acquire the assets or the ownership of, control of, or the power to vote shares of a bank or bank holding company and all of the banks and nonbanking companies owned by the bank holding company, including the companies listed below.

The applications listed below, as well as other related filings required by the Board, are available for immediate inspection at the Federal Reserve Bank indicated. Once the application has been accepted for processing, it will also be available for inspection at the offices of the Board of Governors. Interested persons may express their views in writing on the standards enumerated in the BHC Act (12 U.S.C. 1842(c)). If the proposal also involves the acquisition of a nonbanking company, the review also includes whether the acquisition of the nonbanking company complies with the standards in section 4 of the BHC Act, including whether the acquisition of the nonbanking company can ''reasonably be expected to produce benefits to the public, such as greater convenience, increased competition, or gains in efficiency, that outweigh possible adverse effects, such as undue concentration of resources, decreased or unfair competition, conflicts of interests, or unsound banking practices'' (12 U.S.C. 1843). Any request for a hearing must be accompanied by a statement of the reasons a written presentation would not suffice in lieu of a hearing, identifying specifically any questions of fact that are in dispute, summarizing the evidence that would be presented at a hearing, and indicating how the party commenting would be aggrieved by approval of the proposal. Unless otherwise noted, nonbanking activities will be conducted throughout the United States.

Unless otherwise noted, comments regarding each of these applications must be received at the Reserve Bank indicated or the offices of the Board of Governors not later than August 19, 1996.

A. Federal Reserve Bank of Chicago (James A. Bluemle, Vice President) 230 South LaSalle Street, Chicago, Illinois 60690:

1. Crestmark Bancorp, Inc., Bloomfield Hills, Michigan; to become a bank holding company by acquiring 100 percent of the voting shares of Crestmark Bank, Troy, Michigan (in organization).

2. First Value Corporation, Appleton, Wisconsin; to become a bank holding company by acquiring 100 percent of the voting shares of Tigerton Bancorporation, Inc., Tigerton, Wisconsin, and thereby indirectly acquire First National Bank in Tigerton, Tigerton, Wisconsin.

B. Federal Reserve Bank of Dallas (Genie D. Short, Vice President) 2200 North Pearl Street, Dallas, Texas 75201-2272:

1. Canton Financial Corporation, Canton, Texas; to become a bank holding company by acquiring 100 percent of the voting shares of The First National Bank of Canton, Canton, Texas.

2. Texas Financial Bancorporation, Inc., Minneapolis, Minnesota; to acquire 89.59 percent of the voting shares of The Farmers and Mechanics Bank, Galesburg, Illinois.

Board of Governors of the Federal Reserve System, July 19, 1996.

Jennifer J. Johnson

Deputy Secretary of the Board

[FR Doc. 96–18863 Filed 7–24–96; 8:45 am]

BILLING CODE 6210–01–F

Notice of Proposals To Engage in Permissible Nonbanking Activities or To Acquire Companies That Are Engaged in Permissible Nonbanking Activities

The companies listed in this notice have given notice under section 4 of the Bank Holding Company Act (12 U.S.C. 1843) (BHC Act) and Regulation Y, (12 CFR Part 225) to engage *de novo*, or to acquire or control voting securities or assets of a company that engages either directly or through a subsidiary or other company, in a nonbanking activity that is listed in § 225.25 of Regulation Y (12 CFR 225.25) or that the Board has determined by Order to be closely related to banking and permissible for bank holding companies. Unless otherwise noted, these activities will be conducted throughout the United States.

Each notice is available for inspection at the Federal Reserve Bank indicated. Once the notice has been accepted for processing, it will also be available for inspection at the offices of the Board of Governors. Interested persons may express their views in writing on the question whether the proposal complies with the standards of section 4 of the BHC Act, including whether consummation of the proposal can ''reasonably be expected to produce benefits to the public, such as greater convenience, increased competition, or gains in efficiency, that outweigh possible adverse effects, such as undue concentration of resources, decreased or unfair competition, conflicts of interests, or unsound banking practices'' (12 U.S.C. 1843). Any request for a hearing on this question must be accompanied by a statement of the reasons a written presentation would not suffice in lieu of a hearing, identifying specifically any questions of fact that are in dispute, summarizing the evidence that would be presented at a hearing, and indicating how the party commenting would be aggrieved by approval of the proposal.

Unless otherwise noted, comments regarding the applications must be received at the Reserve Bank indicated or the offices of the Board of Governors not later than August 8, 1996.

A. Federal Reserve Bank of Cleveland (R. Chris Moore, Senior Vice President) 1455 East Sixth Street, Cleveland, Ohio 44101:

1. American Bancorporation, Wheeling, West Virginia; through its wholly-owned subsidiary, American Mortgages, Inc., Wheeling, West Virginia, proposes to acquire 51 percent of the shares to be issued by Premier Mortgage Limited, Columbus, Ohio, a *de novo* joint venture with HER, Inc., Columbus, Ohio, through two of its affiliates, Homebuyers Mortgage Company and Shelter Financial Services, both of Columbus, Ohio, and thereby engage in acquiring and servicing loans as permitted by § 225.25(b)(1) of the Board's Regulation Y.

B. Federal Reserve Bank of Atlanta (Zane R. Kelley, Vice President) 104 Marietta Street, N.W., Atlanta, Georgia 30303:

1. Dadeland Bancshares, Inc., Miami, Florida; to engage *de novo* through its subsidiary, Dadeland Software Services, Inc., Miami, Florida, a 20 percent interest in a joint venture, in data processing, computer software activities, and related consulting service activities, pursuant to §§ 225.25(b)(7) and (b)(11) of the Board's Regulation Y.

2. First Alliance Bancorp, Inc., Marietta, Georgia; to acquire Premier Bancshares, Inc., Atlanta, Georgia, and thereby, indirectly acquire Premier Bank, F.S.B., Atlanta, Georgia, and engage in operating a savings association, pursuant to § 225.25(b)(9) of the Board's Regulation Y, and Premier Lending Corporation, Atlanta, Georgia, and thereby engage in making, acquiring, or servicing loans or other extensions of credit, pursuant to § 225.25(b)(1) of the Board's Regulation Y. These activities will be performed throughout the State of Georgia.

Board of Governors of the Federal Reserve System, July 19, 1996.

Jennifer J. Johnson

Deputy Secretary of the Board

[FR Doc. 96–18862 Filed 7–24–96; 8:45 am]

BILLING CODE 6210–01–F

FEDERAL TRADE COMMISSION

[File No. D09272]

Home Shopping Network, Inc.; Home Shopping Club, Inc.; HSN Lifeway Health Products, Inc.; Proposed Consent Agreement With Analysis To Aid Public Comment

AGENCY: Federal Trade Commission.

ACTION: Proposed consent agreement.

SUMMARY: In settlement of alleged violations of federal law prohibiting unfair or deceptive acts or practices and unfair methods of competition, this consent agreement, accepted subject to final Commission approval, would require, among other things, the St. Petersburg, Florida-based television advertiser and two of its subsidiaries to have competent and reliable scientific evidence before making any claim that a food, dietary supplement, or drug can cure, treat, or prevent any disease or has any effect on the structure or function of the human body and before making any claims about the performance, benefits, or efficacy of any smoking-cessation program, product, or service. The consent agreement settles allegations that the respondents made a number of health-related claims about four mouth sprays without having the necessary evidence to back them up. The stop-smoking spray and three vitamin sprays were marketed during an advertising program called ''Spotlight on Ruta Lee'' which was produced and disseminated by Home Shopping Club.

DATES: Comments must be received on or before September 23, 1996.

ADDRESSES: Comments should be directed to: FTC/Office of the Secretary, Room 159, 6th St. and Pa. Ave., N.W., Washington, D.C. 20580.

FOR FURTHER INFORMATION CONTACT: Lisa B. Kopchik, Federal Trade Commission, 6th and Pennsylvania Avenue, NW, S–4002, Washington, DC 20580. (202) 326–3139. Joel Winston, Federal Trade Commission, 6th and Pennsylvania Avenue, NW., S–4002, Washington, DC 20580, (202) 326–3153.

SUPPLEMENTARY INFORMATION: Pursuant to Section 6(f) of the Federal Trade Commission Act, 38 Stat. 721, 15 U.S.C. 46 and Section 2.34 of the Commission's Rules of Practice (16 CFR 2.34), notice is hereby given that the following consent agreement containing a consent order to cease and desist, having been filed with and accepted, subject to final approval, by the Commission, has been placed on the public record for a period of sixty (60) days. Public comment is invited. Such comments or views will be considered by the Commission and will be available for inspection and copying at its principal office in accordance with Section 4.9(b)(6)(ii) of the Commission's Rules of Practice (16 CFR 4.9(b)(6)(ii)).

This agreement herein, by and between Home Shopping Network, Inc., Home Shopping Club, Inc., and HSN Lifeway Health Products, Inc., corporations, hereinafter sometimes

referred to as respondents, and their attorneys, and counsel for the Federal Trade Commission, is entered into in accordance with the Commission's Rule governing consent order procedures. In accordance therewith the parties hereby agree that:

1.a. Respondent Home Shopping Network, Inc. is a Delaware corporation, with its principal office or place of business at 11831 30th Court North, St. Petersburg, Florida 34618–9090.

1.b. Respondent Home Shopping Club, Inc. is a Delaware corporation, with its principal office or place of business at 11831 30th Court North, St. Petersburg, Florida 34618–9090. Home Shopping Club, Inc. is a wholly-owned subsidiary of Home Shopping Network, Inc.

1.c. Respondent HSN Lifeway Health Products, Inc. is a Delaware corporation, with its principal office or place of business at 11831 30th Court North, St. Petersburg, Florida 34618–9090. HSN Lifeway Health Products, Inc. is a wholly-owned second tier subsidiary of Home Shopping Network, Inc.

2. Respondents have been served with a copy of the complaint issued by the Federal Trade Commission charging them with violations of Sections 5(a) and 12 of the Federal Trade Commission Act, and have filed an answer to the complaint denying said charges.

3. Respondents admit all the jurisdictional facts set forth in the Commission's complaint in this proceeding.

4. Respondents waive:

a. Any further procedural steps;

b. The requirement that the Commission's decision contain a statement of findings of fact and conclusions of law;

c. All rights to seek judicial review or otherwise to challenge or contest the validity of the order entered pursuant to this agreement; and

d. Any claim under the Equal Access to Justice Act.

5. This agreement shall not become a part of the public record of the proceeding unless and until it is accepted by the Commission. If this agreement is accepted by the Commission it will be placed on the public record for a period of sixty (60) days and information in respect thereto publicly released. The Commission thereafter may either withdraw its acceptance of this agreement and so notify the respondents, in which event it will take such action as it may consider appropriate, or issue and serve its decision, in disposition of the proceeding.

6. This agreement is for settlement purposes only and does not constitute an admission by respondents of facts, other than jurisdictional facts, or of violations of law as alleged in the complaint issued by the Commission.

7. This agreement contemplates that, if it is accepted by the Commission, and if such acceptance is not subsequently withdrawn by the Commission pursuant to the provisions of Section 3.25(f) of the Commission's Rules, the Commission may, without further notice to respondents, (1) issue its decision containing the following order to cease and desist in disposition of the proceeding, and (2) make information public in respect thereto. When so entered, the order to cease and desist shall have the same force and effect and may be altered, modified or set aside in the same manner and within the same time provided by statute for other orders. The order shall become final upon service. Delivery by the U.S. Postal Service of the decision containing the agreed-to order to respondents' address as stated in this agreement shall constitute service. Respondents waive any right they may have to any other manner of service. The complaint may be used in construing the terms of the order, and no agreement, understanding, representation, or interpretation not contained in the order or in the agreement may be used to vary or contradict the terms of the order.

8. Respondents have read the complaint and the order contemplated hereby. They understand that once the order has been issued, they will be required to file one or more compliance reports showing that they have fully complied with the order. Respondents further understand that they may be liable for civil penalties in the amount provided by law for each violation of the order after it becomes final.

Order

Definitions

For the purposes of this order, ''competent and reliable scientific evidence'' shall mean tests, analyses, research, studies, or other evidence based on the expertise of professionals in the relevant area, that have been conducted and evaluated in an objective manner by persons qualified to do so, using procedures generally accepted in the profession to yield accurate and reliable results.

I

It is ordered that respondents Home Shopping Network, Inc., Home Shopping Club, Inc., and HSN Lifeway Health Products, Inc., corporations, their successors and assigns, by and through their officers, agents, representatives and employees, directly or through any partnership, corporation, subsidiary, division, or other device, in connection with the manufacturing, advertising, packaging, labeling, promotion, offering for sale, sale or distribution of Life Way Vitamin C and Zinc Spray, Life Way Antioxidant Spray, Life Way Vitamin B–12 Spray, or any other food, food or dietary supplement, or drug, as ''food'' and ''drug'' are defined in Section 15 of the Federal Trade Commission Act, 15 U.S.C. § 55, in or affecting commerce, as ''commerce'' is defined in the Federal Trade Commission Act, do forthwith cease and desist from making any representation, in any manner, directly or by implication:

A. That such product:

1. Is more fully absorbed by the human body than any other product;

2. Heals lesions in the mouth, cold sores on the mouth, or cracking of the corners of the lips;

3. Prevents common colds;

4. Effectively treats symptoms related to hangovers;

5. Increases energy;

6. Ensures the proper functioning of the immune system;

7. Reduces the risk of contracting infectious diseases;

8. Prevents facial lines; or

B. That use of the product can or will cure, treat, or prevent any disease, or have any effect on the structure or function of the human body,

unless, at the time of making such representation, respondents possess and rely upon competent and reliable scientific evidence that substantiates the representation.

II

It is further ordered that respondents Home Shopping Network, Inc., Home Shopping Club, Inc., and HSN Lifeway Health Products, Inc., corporations, their successors and assigns, by and through their officers, agents, representatives and employees, directly or through any partnership, corporation, subsidiary, division or other device, in connection with the manufacturing, advertising, packaging, labeling, promotion, offering for sale, sale or distribution of Life Way Smoke-Less Nutrient Spray or any other smoking cessation product, program, or service, in or affecting commerce, as ''commerce'' is defined in the Federal Trade Commission Act, do forthwith cease and desist from making any representation, in any manner, directly or by implication:

A. That such product, program, or service enables smokers, regardless of how long they have smoked or how

much they smoke, to stop smoking easily;

B. That such product, program, or service satisfies the physiological urge to smoke a cigarette, or eliminates the quivering, anxiety and weight gain attendant with quitting smoking; or

C. Regarding the performance, benefits or efficacy of any such product, program, or service,

unless, at the time of making such representation, respondents possess and rely upon competent and reliable scientific evidence that substantiates the representation.

III

Nothing in this order shall prohibit respondents from making any representation for any product that is specifically permitted in labeling for such product by regulations promulgated by the Food and Drug Administration pursuant to the Nutrition Labeling and Education Act of 1990.

IV

Nothing in this order shall prohibit respondents from making any representation for any drug that is permitted in labeling for any such drug under any tentative final or final standard promulgated by the Food and Drug Administration, or under any new drug application approved by the Food and Drug Administration.

V

It is further ordered that, for three (3) years after the last date of dissemination of any representation covered by this order, respondents Home Shopping Network, Inc., Home Shopping Club, Inc., and HSN Lifeway Health Products, Inc., corporations, or their successors and assigns, shall maintain and upon request make available to the Federal Trade Commission for inspection and copying copies of all advertisements which contain any such representation, including videotape recordings of all such broadcast advertisements.

VI

It is further ordered that, for five (5) years after the last date of dissemination of any representation covered by this order, respondents Home Shopping Network, Inc., Home Shopping Club, Inc., and HSN Lifeway Health Products, Inc., corporations, or their successors and assigns, shall maintain and upon request make available to the Federal Trade Commission for inspection and copying:

A. All materials that were relied upon in disseminating such representation; and

B. All tests, reports, studies, surveys, demonstrations or other evidence in their possession or control that contradict, qualify, or call into question such representation, or the basis relied upon for such representation, including complaints from consumers.

VII

It is further ordered that respondents Home Shopping Network, Inc., Home Shopping Club, Inc., and HSN Lifeway Health Products, Inc., corporations, shall, within thirty (30) days after service of this order, provide a copy of this order to each of respondents' current principals, officers, directors and managers, and to all personnel, agents and representatives having sales, advertising, or policy responsibility with respect to the subject matter of this order.

VIII

It is further ordered that the respondents Home Shopping Network, Inc., Home Shopping Club, Inc., and HSN Lifeway Health Products, Inc., their successors and assigns, shall notify the Commission at least thirty (30) days prior to any change in the corporations that may affect compliance obligations arising under this order, including but not limited to a dissolution, assignment, sale, merger, or other action that would result in the emergence of a successor corporation; the creation or dissolution of a subsidiary, parent, or affiliate that engages in the acts or practices subject to this order; the proposed filing of a bankruptcy petition; or a change in the corporate name or address. *Provided, however,* that, with respect to any proposed change in the corporation about which the respondents learn less than thirty (30) days prior to the date such action is to take place, respondents shall notify the Commission as soon as practicable after obtaining such knowledge. All notices required by this Part shall be sent by certified mail to the Associate Director, Division of Enforcement, Bureau of Consumer Protection, Federal Trade Commission, Washington, D.C. 20580.

IX

It is further ordered that respondents Home Shopping Network, Inc., Home Shopping Club, Inc., and HSN Lifeway Health Products, Inc., corporations, shall, within sixty (60) days after service of this order, and at such other times as the Federal Trade Commission may require, file with the Commission a report, in writing, setting forth in detail the manner and form in which they have complied with this order.

X

This order will terminate twenty (20) years from the date of its issuance, or twenty (20) years from the most recent date that the United States or the Federal Trade Commission files a complaint (with or without an accompanying consent decree) in federal court alleging any violation of the order, whichever comes later; *provided, however,* that the filing of such a complaint will not affect the duration of:

A. Any Part in this order that terminates in less than twenty (20) years;

B. This order's application to any respondent that is not named as a defendant in such complaint; and

C. This order if such complaint is filed after the order has terminated pursuant to this Part.

Provided, further, that if such complaint is dismissed or a Federal court rules that the respondent did not violate any provision of the order, and the dismissal or ruling is either not appealed or upheld on appeal, then the order will terminate according to this Part as though the complaint had never been filed, except that the order will not terminate between the date such complaint is filed and the later of the deadline for appealing such dismissal or ruling and the date such dismissal or ruling is upheld on appeal.

Analysis of Proposed Consent Order To Aid Public Comment

The Federal Trade Commission has accepted an agreement to a proposed consent order from Home Shopping Network, Inc. (''HSN''), Home Shopping Club, Inc. (''HSC''), and HSN Lifeway Health Products, Inc. (''Lifeway'').

The proposed consent order has been placed on the public record for sixty (60) days for receipt of comments by interested persons. Comments received during this period will become part of the public record. After sixty (60) days, the Commission will again review the agreement and the comments received and will decide whether it should withdraw from the agreement or make final the agreement's proposed order.

This matter involves alleged deceptive representations for three spray vitamin products and a spray smoking cessation product. The products at issue are Life Way Vitamin C and Zinc Spray, Life Way Antioxidant Spray, Life Way Vitamin B–12 Spray, and Life Way Smoke-Less Nutrient Spray. The Commission issued a complaint on March 2, 1995 charging that HSN, HSC and Lifeway created and disseminated a series of television

advertisements called ''Spotlight on Ruta Lee'' on which the Life Way Spray Products were sold. These advertisements featured Ruta Lee as a celebrity show host and were seen on the Home Shopping Club, commercial programming shown on the Home Shopping Network's cable and broadcast channels.

The Commission's complaint against HSN, HSC, and Lifeway was withdrawn from adjudication on May 14, 1996, prior to commencement of the administrative hearing, so that the Commission can consider the proposed order. Previously, the Commission had issued a consent order against Ruta Lee and Live-Lee Productions, Inc. to settle charges against Ruta Lee for her role in making and disseminating these advertisements (*Live-Lee Prods, Inc.*, Docket No. C–3620, Oct. 10, 1995).

HSN is a holding company for numerous subsidiaries which are engaged primarily in the marketing, advertising, sale and distribution of consumer products through broadcast and cable television. HSC, a wholly-owned subsidiary of HSN, produces commercial television programming. Lifeway is a wholly-owned ''second tier'' subsidiary of HSN which sells vitamins and other health-related products.

According to the FTC complaint, the respondents made claims 1) that the vitamins in the Life Way Spray Products are more fully absorbed by the human body than vitamins taken in pill form; 2) that the Vitamin C and Zinc Spray would heal mouth lesions, cold sores, and cracking of the corners of the lips, and prevent common colds; 3) that the Vitamin B–12 Spray would treat hangover symptoms and increase users' energy; and 4) that the Antioxidant Spray would ensure the proper functioning of the immune system, reduce the risk of contracting infectious diseases, and prevent facial lines. The complaint also alleges that the respondents made claims that the Smoke-Less Nutrient Spray would enable smokers, regardless of how long they have smoked or how much they smoke, to stop smoking easily; and would satisfy the physiological urge to smoke a cigarette and eliminate the quivering, anxiety and weight gain that go along with quitting smoking. The complaint alleges that the respondents did not have a reasonable basis for these representations at the time they were made.

The proposed consent order contains provisions designed to prevent the respondents from engaging in similar acts and practices in the future.

Part I of the proposed order prohibits the respondents from representing that any food, food or dietary supplement, or drug can or will cure, treat, or prevent any disease or have any effect on the structure or function of the human body, unless, at the time they make the representation, they possess and rely upon competent and reliable scientific evidence that substantiates the representation.

Part II of the proposed order prohibits respondents from making any representation about the performance, benefits or efficacy of any smoking cessation product, program, or service, unless, at the time they make the representation, they possess and rely upon competent and reliable scientific evidence that substantiates the representation.

Part III allows the respondents to make representations for any product that are specifically permitted in labeling for that product by regulations issued by the Food and Drug Administration (''FDA'') under the Nutrition Labeling and Education Act of 1990. Part IV allows the respondents to make representations for any drug that are permitted in labeling for that drug under any tentative final or final FDA standard or under any new drug application approved by the FDA.

Parts V through IX require the respondents to keep copies of advertisements making representations covered by the order; to keep records concerning those representations, including materials that they relied upon when making the representations; to provide copies of the order to certain of respondents' personnel; to notify the Commission of changes in corporate structure; and to file compliance reports with the Commission. Part X provides that the order will terminate after twenty (20) years under certain circumstances.

The purpose of this analysis is to facilitate public comment on the proposed order, and it is not intended to constitute an official interpretation of the agreement and proposed order or to modify in any way their terms.

Donald S. Clark,

Secretary.

[FR Doc. 96–18858 Filed 7–24–96; 8:45 am]

BILLING CODE 6750–01–U

[File No. 961–0052]

Koninklijke Ahold NV; Ahold USA, Inc.; Proposed Consent Agreement With Analysis To Aid Public Comment

AGENCY: Federal Trade Commission.

ACTION: Proposed Consent Agreement.

SUMMARY: In settlement of alleged violations of federal law prohibiting unfair or deceptive acts or practices and unfair methods of competition, this consent agreement, accepted subject to final Commission approval, would require, among other things, the Atlanta-based supermarket chain owner to divest a total of 30 supermarkets or supermarket properties in 14 communities throughout Connecticut, Rhode Island, and Massachusetts within 30 days of the Commission's final approval of this settlement. The consent agreement settles allegations that Ahold's acquisition of The Stop & Shop Companies, Inc. would violate antitrust laws by substantially lessening supermarket competition in those areas, possibly resulting in higher prices or reduced quality and selection for consumers.

DATES: Comments must be received on or before September 23, 1996.

ADDRESSES: Comments should be directed to: FTC/Office of the Secretary, Room 159, 6th St. and Pa. Ave., N.W., Washington, D.C. 20580.

FOR FURTHER INFORMATION CONTACT:

William Baer, Federal Trade Commission, 6th and Pennsylvania Avenue, NW, H–374, Washington, DC 20580. (202) 326–2932.

George Cary, Federal Trade Commission, 6th and Pennsylvania Avenue, NW, H–374, Washington, DC 20580. (202) 326–3741.

SUPPLEMENTARY INFORMATION Pursuant to Section 6(f) of the Federal Trade Commission Act, 38 Stat. 721, 15 U.S.C. 46 and Section 2.34 of the Commission's Rules of Practice (16 CFR 2.34), notice is hereby given that the following consent agreement containing a consent order to cease and desist, having been filed with and accepted, subject to final approval, by the Commission, has been placed on the public record for a period of sixty (60) days. Public comment is invited. Such comments or views will be considered by the Commission and will be available for inspection and copying at its principal office in accordance with Section 4.9(b)(6)(ii) of the Commission's Rules of Practice (16 CFR 4.9(b)(6)(ii)).

Agreement Containing Consent Order

The Federal Trade Commission (''Commission''), having initiated an investigation of the proposed acquisition of The Stop & Shop Companies, Inc. (''Stop & Shop'') by Koninklijke Ahold nv (''Royal Ahold'') and Ahold USA, Inc. (''Ahold USA''), and it now appearing that Royal Ahold and Ahold USA, hereinafter sometimes referred to as ''Proposed Respondents,''

are willing to enter into an agreement containing an Order to divest certain assets and to cease and desist from certain acts, and providing for other relief:

It is hereby agreed by and between Proposed Respondents, by their duly authorized officers and attorneys, and counsel for the Commission that:

1. Proposed Respondent Koninklijke Ahold nv is a corporation organized, existing, and doing business under and by virtue of the laws of The Netherlands, with its office and principal place of business located at Albert Heijnweg 1, 1507 EH Zaandam, The Netherlands.

2. Proposed Respondent Ahold USA, Inc., is a corporation organized, existing, and doing business under and by virtue of the laws of Delaware, with its office and principal place of business located at executive offices at One Atlanta Plaza, 950 East Paces Ferry Road, Suite 2575, Atlanta, Georgia 30326.

3. Proposed Respondents admit all the jurisdictional facts set forth in the draft of complaint.

4. Proposed Respondents waive:

a. Any further procedural steps;

b. The requirement that the Commission's decision contain a statement of findings of fact and conclusions of law;

c. All rights to seek judicial review or otherwise to challenge or contest the validity of the Order entered pursuant to this agreement; and

d. Any claim under the Equal Access to Justice Act.

5. This agreement shall not become part of the public record of the proceeding unless and until it is accepted by the Commission. If this agreement is accepted by the Commission it, together with the draft of complaint contemplated thereby, will be placed on the public record for a period of sixty (60) days and information in respect thereto publicly released. The Commission thereafter may either withdraw its acceptance of this agreement and so notify the Proposed Respondents, in which event it will take such action as it may consider appropriate, or issue and serve its complaint (in such form as the circumstances may require) and decision, in disposition of the proceeding.

6. This agreement is for settlement purposes only and does not constitute an admission by Proposed Respondents that the law has been violated as alleged in the draft of the complaint, or that the facts as alleged in the draft complaint, other than jurisdictional facts, are true.

7. This agreement contemplates that, if it is accepted by the Commission, and if such acceptance is not subsequently withdrawn by the Commission pursuant to the provisions of Section 2.34 of the Commission's Rules, the Commission may, without further notice to the Proposed Respondents, (1) issue its complaint corresponding in form and substance with the draft of complaint and its decision containing the following Order to divest (as modified by any approved final purchase and sale agreements) and to cease and desist in disposition of the proceeding, and (2) make information public with respect thereto. When so entered, the Order shall have the same force and effect and may be altered, modified, or set aside in the same time provided by statute for other orders. The Order shall become final upon service. Delivery by the United States Postal Service of the complaint and decision containing the agreed-to Order to Proposed Respondents' counsel, Robert D. Paul, Esq., White & Case, 601 13th Street, N.W., Suite 600 South, Washington, D.C. 20005, shall constitute service. Proposed Respondents waive any right they may have to any other manner of service. The complaint may be used in construing the terms of the Order, and no agreement, understanding, representation, or interpretation not contained in the Order or the Agreement may be used to vary or contradict the terms of the Order.

8. Proposed Respondents have read the proposed complaint and Order contemplated hereby. Proposed Respondents understand that once the Order has been issued, they will be required to file verified written reports showing that they have fully complied with the Order. Proposed Respondents further understand that they may be liable for civil penalties in the amount provided by law for each violation of the Order after it becomes final.

Order

I

It is ordered that, as used in this Order, the following definitions shall apply:

A. ''Royal Ahold'' means Koninklijke Ahold nv, its predecessors, subsidiaries, divisions, and groups and affiliates controlled by Koninklijke Ahold nv, their successors and assigns, and their directors, officers, employees, agents, and representatives.

B. ''Ahold USA'' means Ahold USA, Inc., its predecessors, subsidiaries, divisions, and groups and affiliates controlled by Ahold USA, Inc., their successors and assigns, and their directors, officers, employees, agents, and representatives.

C. ''Respondents'' means Royal Ahold and Ahold USA.

D. ''Assets to be Divested'' means the supermarkets identified in Paragraph II.A. of this Order as well as the supermarket business operated, and all assets, leases, properties, business and goodwill, tangible and intangible, utilized in the supermarket operations at those locations, but need not include the ''Stop & Shop'' or ''Edwards'' trade names, trade dress, trade marks, service marks, and such other intangible assets that Respondents also utilize in their business at locations other than those identified in Paragraph II.A. of this Order.

E. ''Commission'' means the Federal Trade Commission.

F. ''Acquisition'' means Royal Ahold's proposed purchase of all the voting stock of Stop & Shop pursuant to an agreement dated on or about March 27, 1996.

G. ''Supermarket'' means a full-line retail grocery store with annual sales of at least two million dollars that carries a wide variety of food and grocery items in particular product categories, including bread and dairy products; refrigerated and frozen food and beverage products; fresh and prepared meats and poultry; produce, including fresh fruits and vegetables; shelf-stable food and beverage products, including canned and other types of packaged products; staple foodstuffs, which may include salt, sugar, flour, sauces, spices, coffee, and tea; and other grocery products, including nonfood items such as soaps, detergents, paper goods, and other household products.

H. ''Overlap Areas'' means the following incorporated towns and cities:

(a) New Milford, Connecticut;

(b) Windham and Mansfield, Connecticut;

(c) Wallingford and Meriden, Connecticut;

(d) Waterbury, Watertown, and Naugatuck, Connecticut;

(e) ''The greater Hartford, Connecticut, area,'' which includes Hartford, New Britain, Newington, Wethersfield, Farmington, West Hartford, Bloomfield, Windsor, South Windsor, East Hartford, Manchester, Glastonbury, and Vernon, Connecticut;

(f) Avon and Simsbury, Connecticut;

(g) Enfield, Somers, East Windsor, Suffield, and Windsor Locks, Connecticut;

(h) Southington and Plainville, Connecticut;

(i) Milford, Orange, West Haven, and New Haven, Connecticut;

(j) East Haven, Branford, Guilford, Madison, Clinton, and Old Saybrook, Connecticut;

(k) Fairfield, Stratford, Bridgeport, Trumbull, and Shelton, Connecticut;

(l) South Kingstown and Narragansett, Rhode Island;

(m) ''The greater Providence, Rhode Island, area,'' which includes East Providence, Providence, Pawtucket, Warwick, Cranston, Central Falls, Lincoln, Smithfield, Barrington, Bristol, Cumberland, North Providence, Johnston, West Warwick, East Greenwich, and Coventry, Rhode Island; and Attleboro and Seekonk, Massachusetts; and

(n) ''The greater Springfield, Massachusetts, area,'' which includes Springfield, West Springfield, South Hadley, Chicopee, Westfield, Holyoke, Agawam, Southwick, Longmeadow, and East Longmeadow, Massachusetts.

II

It is further ordered that:

A. Respondents shall divest, absolutely and in good faith, within thirty (30) days from the date this Order becomes final:

(1) To Star Markets Company, pursuant to a letter of intent dated July 2, 1996:

(a) Edwards supermarket number 821 located at 295 Armistice Boulevard, Pawtucket, RI;

(b) Edwards supermarket number 751 located at 200 Niantic Avenue, Providence, RI;

(c) Edwards supermarket number 815 located at 1810 Plainfield Pike, Cranston, RI;

(d) Edwards supermarket number 817 located at 418 Kingstown Road, Wakefield, RI;

(e) Edwards supermarket number 779 located at 1401 Bald Hill Road, Warwick, RI;

(f) Edwards supermarket number 820 located at 1000 Division Street, East Greenwich, RI; and

(g) Stop & Shop supermarket number 458 located at Route 6 & 1 Commercial Way, Seekonk, MA.

(2) To Bozzuto's Inc., pursuant to a letter of intent dated July 1, 1996:

(a) Edwards supermarket number 295 located at 207 Hartford Turnpike, Vernon, CT;

(b) Edwards supermarket number 362 located at Newbrite Plaza, 60 East Main Street, New Britain, CT;

(c) Edwards supermarket number 748 located at 333 North Main Street, West Hartford, CT; and

(d) Edwards supermarket number 768 located at 750 Queen Street, Southington, CT.

(3) To Shaw's Supermarkets, Inc., pursuant to a letter of intent dated July 2, 1996:

(a) Edwards supermarket number 725 located at 40 Hazard Avenue, Enfield, CT;

(b) Edwards supermarket number 742 located at 953 Wolcott Road, Waterbury, CT;

(c) Edwards supermarket number 758 located at 538 Boston Post Road, Orange, CT;

(d) Edwards supermarket number 773 located at 875 Bridgeport Avenue, Shelton, CT;

(e) Stop & Shop supermarket number 665 located at 55 Welles Street, Glastonbury, CT;

(f) Edwards lease agreement for premises located in the former Rich's Department Store, Wakefield Mall, Tower Hill Road, South Kingstown, RI;

(g) Edwards supermarket number 312 located at 1100 Barnum Avenue, Stratford, CT;

(h) Edwards lease agreement for the former Grand Union store site located at 800 Barnum Avenue, Stratford, CT;

(i) Edwards supermarket number 200 located at 1975 Black Rock Turnpike, Fairfield, CT;

(j) Edwards supermarket number 299 located at 1167 Main Street, Watertown, CT;

(k) Edwards supermarket number 823 located at 266 East Main Street, Clinton, CT;

(l) Edwards supermarket number 749 located at 60 Cantor Drive, Willimantic, CT;

(m) Edwards supermarket number 783 located at 245 Kane Street, West Hartford, CT; and

(n) Edwards supermarket number 317 located at 976 North Colony Road, Wallingford, CT.

(4) To Big Y Foods, Inc., pursuant to a letter of intent dated June 7, 1996, as modified by letters of July 2, 1996:

(a) Edwards supermarket number 728 located at 830 Boston Post Road, Guilford, CT;

(b) Edwards supermarket number 722 located at 650 Memorial Drive, Chicopee, MA;

(c) Edwards supermarket number 704 located at West Main Route 44, Avon, CT;

(d) Edwards supermarket number 368 located at 3 Kent Road, New Milford, CT; and

(e) Edwards supermarket number 329 located at 265 Ellington Road, East Hartford, CT.

B. If Respondents have not divested the Assets to be Divested pursuant to Paragraph II.A., Respondents shall divest the Assets to be Divested within thirty (30) days from the date this Order becomes final to an acquirer or acquirers that receive the prior approval of the Commission and only in a manner that receives the prior approval of the Commission.

C. The purpose of the divestiture of the Assets to be Divested is to ensure the continuation of the Assets to be Divested as ongoing viable enterprises engaged in the Supermarket business and to remedy any lessening of competition resulting from the Acquisition as alleged in the Commission's complaint.

III

It is further ordered that:

A. If Respondents have not divested absolutely and in good faith the Assets to be Divested pursuant to Paragraph II. of this Order, the Commission may appoint a trustee to divest the Assets to be Divested. In the event that the Commission brings an action pursuant to § 5(*l*) of the Federal Trade Commission Act, 15 U.S.C. § 45(*l*), or any other statute enforced by the Commission, Respondents shall consent to the appointment of a trustee in such action. Neither the appointment of a trustee nor a decision not to appoint a trustee under this Paragraph shall preclude the Commission from seeking civil penalties or any other relief available to it, including a court-appointed trustee pursuant to § 5(*l*) of the Federal Trade Commission Act, or any other statute enforced by the Commission, for any failure by Respondents to comply with this Order.

B. If a trustee is appointed by the Commission or a court pursuant to Paragraph III.A. of this Order, Respondents shall consent to the following terms and conditions regarding the trustee's powers, duties, authority, and responsibilities:

1. The Commission shall select the trustee, subject to the consent of Respondents, which consent shall not be unreasonably withheld. The trustee shall be a person with experience and expertise in acquisitions and divestitures. If Respondents have not opposed, in writing, including the reasons for opposing, the selection of any proposed trustee within ten (10) days after receipt of written notice by the staff of the Commission to Respondents of the identity of any proposed trustee, Respondents shall be deemed to have consented to the selection of the proposed trustee.

2. Subject to the prior approval of the Commission, the trustee shall have the exclusive power and authority to divest the Assets to be Divested.

3. Within ten (10) days after appointment of the trustee, Respondents shall execute a trust agreement that, subject to the prior approval of the Commission, and in the case of a court-

appointed trustee, of the court, transfers to the trustee all rights and powers necessary to permit the trustee to effect the divestiture required by this Order.

4. The trustee shall have twelve (12) months from the date the Commission approves the trust agreement described in Paragraph III.B.3. to accomplish the divestiture, which shall be subject to the prior approval of the Commission. If, however, at the end of the twelve (12) month period, the trustee has submitted a plan of divestiture or believes that divestiture can be achieved within a reasonable time, the divestiture period may be extended by the Commission, or in the case of a court-appointed trustee, by the court; provided, however, the Commission may extend this period only two (2) times for up to six (6) months each time.

5. The trustee shall have full and complete access to the Assets to be Divested and to the personnel, books, records and facilities related to the Assets to be Divested or to any other relevant information, as the trustee may reasonably request. Respondents shall develop such financial or other information as such trustee may reasonably request and shall cooperate with the trustee. Respondents shall take no action to interfere with or impede the trustee's accomplishment of the divestiture. Any delays in divestiture caused by Respondents shall extend the time for divestiture under this Paragraph in an amount equal to the delay, as determined by the Commission or, for a court-appointed trustee, by the court.

6. The trustee shall use his or her best efforts to negotiate the most favorable price and terms available in each contract that is submitted to the Commission, subject to Respondents' absolute and unconditional obligation to divest at no minimum price. The divestitures shall be made to an acquirer or acquirers that receive the prior approval of the Commission and only in a manner that receives the prior approval of the Commission. In the event that the trustee receives bona fide offers from more than one acquiring entity, the trustee shall submit all such bids to the Commission, and if the Commission determines to approve more than one such acquiring entity for the Assets to be Divested, the trustee shall divest to the acquiring entity or entities selected by Respondents from among those approved by the Commission.

7. In the event the trustee determines that he or she is unable to divest the Assets to be Divested as described in Paragraph II in a manner consistent with the terms of this Order, the trustee may on his or her own initiative, or at the direction of the Commission, divest any additional or substitute supermarkets of the Respondents located in the respective overlap areas and effect such arrangements as are necessary to satisfy the requirements of this Order.

8. The trustee shall serve, without bond or other security, at the cost and expense of Respondents, on such reasonable and customary terms and conditions as the Commission or a court may set. The trustee shall have the authority to employ, at the cost and expense of Respondents, and at reasonable fees, such consultants, accountants, attorneys, investment bankers, business brokers, appraisers, and other representatives and assistants as are necessary to carry out the trustee's duties and responsibilities. The trustee shall account for all monies derived from the divestiture and all expenses incurred. After approval by the Commission and, in the case of a court-appointed trustee, by the court, of the account of the trustee, including fees for his or her services, all remaining monies shall be paid at the direction of the Respondents, and the trustee's power shall be terminated. The trustee's compensation shall be based at least in significant part on a commission arrangement contingent on the trustee's divesting the Assets to be Divested, and may include an incentive arrangement relating to price.

9. Respondents shall indemnify the trustee and hold the trustee harmless against any losses, claims, damages, liabilities, or expenses arising out of, or in connection with, the performance of the trustee's duties, all reasonable fees of counsel and other expenses incurred in connection with the preparation for, or defense of any claim, whether or not resulting in any liability, except to the extent that such liabilities, losses, damages, claims, or expenses result from misfeasance, gross negligence, willful or wanton acts, or bad faith by the trustee.

10. If the trustee ceases to act or fails to act diligently, a substitute trustee shall be appointed in the same manner as provided in Paragraph III.A. of this Order.

11. The Commission or, in the case of a court-appointed trustee, the court, may on its own initiative or at the request of the trustee issue such additional Orders or directions as may be reasonably necessary or appropriate to accomplish the divestiture required by this Order.

12. The trustee shall have no obligation or authority to operate or maintain the Assets to be Divested.

13. The trustee shall report in writing to Respondents and the Commission every forty-five (45) days concerning the trustee's efforts to accomplish divestiture.

IV

It is further ordered that:

A. Pending divestiture of the Assets to be Divested, Respondents shall take such actions as are necessary to maintain the viability, competitiveness, and marketability of the Assets to be Divested consistent with Paragraphs II. and III. of this Order and to prevent the destruction, removal, wasting, deterioration, or impairment of the Assets to be Divested except in the ordinary course of business and except for ordinary wear and tear.

B. Respondents shall comply with all the terms of the Asset Maintenance Agreement attached to this Order and made a part hereof as Appendix I. The Asset Maintenance Agreement shall continue in effect until such time as all Assets to be Divested have been divested as required by this Order.

V

It is further ordered that, for a period of ten (10) years from the date this Order becomes final, Respondents shall not, without providing advance written notification to the Commission, directly or indirectly, through subsidiaries, partnerships, or otherwise:

A. Acquire any ownership or leasehold interest in any facility that has operated as a supermarket within six (6) months of the date of such proposed acquisition in the Overlap Areas; or

B. Acquire any stock, share capital, equity, or other interest in any entity that owns any interest in or operates any supermarket or owned any interest in or operated any supermarket within six (6) months of such proposed acquisition in the Overlap Areas.

Provided, however, that advance written notification shall not apply to the construction of new facilities by Respondents or the acquisition of or leasing of a facility that has not operated as a supermarket within six (6) months of Respondents' offer to purchase or lease.

Said notification shall be given on the Notification and Report Form set forth in the Appendix to Part 803 of Title 16 of the Code of Federal Regulations as amended (hereinafter referred to as ''the Notification''), and shall be prepared and transmitted in accordance with the requirements of that part, except that no filing fee will be required for the Notification. The Notification shall be filed with the Secretary of the Commission and need not be made to

the United States Department of Justice. The Notification is required only of Respondents and not of any other party to the transaction. Respondents shall provide the Notification to the Commission at least thirty days prior to acquiring any such interest (hereinafter referred to as the ''first waiting period''). If, within the first waiting period, representatives of the Commission make a written request for additional information, Respondents shall not consummate the transaction until twenty days after substantially complying with such request for additional information. Early termination of the waiting periods in this Paragraph may be requested and, where appropriate, granted by letter from the Bureau of Competition. Provided, however, that prior notification shall not be required by this Paragraph for a transaction for which notification is required to be made, and has been made, pursuant to Section 7A of the Clayton Act, 15 U.S.C. § 18a.

VI

It is further ordered that Respondents shall be bound by the terms and obligations of the Consent Order issued by the Commission in The Stop & Shop Companies, Inc., *et al.,* Docket No. C–3649.

VII

It is further ordered that:

A. Within forty-five (45) days after the date this Order becomes final and every forty-five (45) days thereafter until Respondents have fully complied with the provisions of Paragraphs II. or III. of this Order, Respondents shall submit to the Commission verified written reports setting forth in detail the manner and form in which they intend to comply, are complying, and have complied with Paragraphs II. and III. Respondents shall include in their compliance reports, among other things that are required from time to time, a full description of the efforts being made to comply with Paragraphs II. and III. of the Order, including a description of proposals for divestitures and the identity of all parties contacted. Respondents shall include in their compliance reports copies of all written communications to and from such parties concerning divestiture.

B. One year (1) from the date this Order becomes final, annually for the next nine (9) years on the anniversary of the date this Order becomes final, and at other times as the Commission may require, Respondents shall file verified written reports with the Commission setting forth in detail the manner and form in which they have complied and are complying with this Order.

VIII

It is further ordered that Respondents shall notify the Commission at least thirty (30) days prior to any proposed change in Respondents such as dissolution, assignment, sale resulting in the emergence of a successor corporation to Respondents, or the creation or dissolution of subsidiaries or any other change in Respondents that may affect compliance obligations arising out of the Order.

IX

It is further ordered that, for the purpose of determining or securing compliance with this Order, Respondents shall permit any duly authorized representative of the Commission:

A. Upon five days' written notice to Respondents, access, during office hours and in the presence of counsel, to inspect and copy all books, ledgers, accounts, correspondence, memoranda and other records and documents in the possession or under the control of Respondents relating to any matters contained in this Order; and

B. Upon five days' written notice to Respondents and without restraint or interference from Respondents, to interview Respondents or officers, directors, or employees of Respondents in the presence of counsel.

Appendix I

Asset Maintenance Agreement

This Asset Maintenance Agreement (''Agreement'') is by and between Koninklijke Ahold nv (''Royal Ahold''), a corporation organized, existing, and doing business under and by virtue of the laws of The Netherlands, with its office and principal place of business located at Albert Heijnweg 1, 1507 EH Zaandam, The Netherlands; Ahold USA, Inc. (''Ahold USA''), a corporation organized, existing, and doing business under and by virtue of the laws of Delaware, with its office and principal place of business located at One Atlanta Plaza, 950 East Paces Ferry Road, Suite 2575, Atlanta, GA 30326; and the Federal Trade Commission (''Commission''), an independent agency of the United States Government, established under the Federal Trade Commission Act of 1914, 15 U.S.C. § 41, *et seq.* (collectively ''the Parties'').

Premises

Whereas, Royal Ahold and Ahold USA, pursuant to an agreement dated on or about March 27, 1996, agreed to acquire the voting stock of The Stop & Shop Companies, Inc. (''the Acquisition''); and

Whereas, the Commission is now investigating the Acquisition to determine if it would violate any of the statutes enforced by the Commission; and

Whereas, if the Commission accepts the attached Agreement Containing Consent Order, the Commission is required to place it on the public record for a period of sixty (60) days for public comment and may subsequently withdraw such acceptance pursuant to the provisions of Section 2.34 of the Commission's Rules; and

Whereas, the Commission is concerned that if an agreement is not reached preserving the *status quo ante* of the Assets to be Divested as described in the attached Agreement Containing Consent Order (''Assets'') during the period prior to their divestitures, any divestiture resulting from any administrative proceeding challenging the legality of the Acquisition might not be possible, or might produce a less than effective remedy; and

Whereas, the Commission is concerned that prior to divestiture to the acquirer or acquirers, it may be necessary to preserve the continued viability and competitiveness of the Assets; and

Whereas, the purpose of this Agreement and of the Consent Order is to preserve the Assets pending the divestitures to the acquirer or acquirers approved by the Federal Trade Commission under the terms of the Order, in order to remedy any anticompetitive effects of the Acquisition; and

Whereas, Royal Ahold and Ahold USA entering into this Agreement shall in no way be construed as an admission by Royal Ahold or Ahold USA that the Acquisition is illegal; and

Whereas, Royal Ahold and Ahold USA understand that no act or transaction contemplated by this Agreement shall be deemed immune or exempt from the provisions of the antitrust laws or the Federal Trade Commission Act by reason of anything contained in this Agreement;

Now, therefore, in consideration of the Commission's agreement that, unless the Commission determines to reject the Consent Order, it will not seek further relief from the parties with respect to the Acquisition, except that the Commission may exercise any and all rights to enforce this Agreement and the Consent Order annexed hereto and made a part thereof, the Parties agree as follows:

Terms of Agreement

1. Royal Ahold and Ahold USA agree to execute, and upon its issuance to be bound by, the attached Consent Order. The Parties further agree that each term defined in the attached Consent Order shall have the same meaning in this Agreement.

2. Unless the Commission brings an action to seek to enjoin the proposed Acquisition pursuant to Section 13(b) of the Federal Trade Commission Act, 15. U.S.C. § 53(b), and obtains a temporary restraining order or preliminary injunction blocking the proposed Acquisition, Royal Ahold and Ahold USA will be free to close the Acquisition after July 15, 1996.

3. Royal Ahold and Ahold USA agree that from the date this Agreement is signed until the earlier of the dates listed in subparagraphs 3.a–3.b, they will comply with the provisions of this Agreement:

a. three business days after the Commission withdraws its acceptance of the

Consent Order pursuant to the provisions of Section 2.34 of the Commission's Rules; or

b. on the day the divestitures set out in the Consent Order have been completed.

4. From the time Royal Ahold and Ahold USA acquire The Stop & Shop Companies, Inc., until the divestiture set out in the Consent Order has been completed, Royal Ahold and Ahold USA shall maintain the viability and marketability of the Assets, and shall not cause the wasting or deterioration of the Assets, nor shall they sell, transfer, encumber or otherwise impair their marketability or viability.

5. From the time Royal Ahold and Ahold USA acquire The Stop & Shop Companies, Inc., until the divestiture set out in the Consent Order has been completed, Royal Ahold and Ahold USA shall maintain the competitiveness of the Assets. This includes but is not limited to the maintaining of promotions and discount policies (e.g., double and triple coupon policies and store coupon promotions) as well as the continuation of specific store services (e.g., hours of operation and operation of specific departments).

6. Should the Commission seek in any proceeding to compel Royal Ahold and Ahold USA to divest themselves of the Assets or to seek any other injunctive or equitable relief, Royal Ahold and Ahold USA shall not raise any objection based upon the expiration of the applicable Hart-Scott-Rodino Antitrust Improvements Act waiting period or the fact that the Commission has not sought to enjoin the Acquisition. Royal Ahold and Ahold USA also waive all rights to contest the validity of this Agreement.

7. For the purpose of determining or securing compliance with this Agreement, subject to any legally recognized privilege, and upon written request with reasonable notice to Royal Ahold or Ahold USA and to their principal offices, Royal Ahold and Ahold USA shall permit any duly authorized representative or representatives of the Commission:

a. Upon three (3) days' notice to Royal Ahold or Ahold USA, access during the office hours of Royal Ahold or Ahold USA, in the presence of counsel, to inspect and copy all books, ledgers, accounts, correspondence, memoranda and other records and documents in the possession or under the control of Royal Ahold or Ahold USA relating to compliance with this Agreement; and

b. Upon five (5) days' notice to Royal Ahold or Ahold USA and without restraint or interference from them, to interview officers or employees of Royal Ahold or Ahold USA, who may have counsel present, regarding any such matters.

8. This Agreement shall not be binding until approved by the Commission.

Analysis To Aid Public Comment on the Provisionally Accepted Consent Order

The Federal Trade Commission (''the Commission'') has accepted for public comment, from Koninklijke Ahold nv and Ahold USA, Inc., Inc. (collectively referred to as ''Ahold''), an agreement containing a consent order. The agreement is designed to remedy any anticompetitive effect stemming from Ahold's proposed acquisition of The Stop & Shop Companies, Inc. (''Stop & Shop'').

This agreement has been placed on the public record for sixty days for reception of comments from interested persons. The Commission is requesting public comment on the entire consent agreement, including the proposed divestitures as well as the proposed purchasers of these assets.

Comments received during this period will become part of the public record. After sixty days, the Commission will again review the agreement and the comments received and will decide whether it should withdraw from the agreement or make final the agreement's order.

Complaint's Allegations

The Commission's proposed complaint alleges that Ahold and Stop & Shop are direct competitors for the retail sale of food and grocery items in supermarkets in the market areas of (1) New Milford, Connecticut; (2) Windham and Mansfield, Connecticut; (3) Wallingford and Meriden, Connecticut; (4) Waterbury, Watertown and Naugatuck, Connecticut; (5) the greater Hartford, Connecticut area, which includes Hartford, New Britain, Newington, Wethersfield, Farmington, West Hartford, Bloomfield, Windsor, South Windsor, East Hartford, Manchester, Glastonbury, and Vernon, Connecticut; (6) Avon and Simbsury, Connecticut; (7) Enfield, Somers, East Windsor, Suffield, and Windsor Locks, Connecticut; (8) Southington and Plainville, Connecticut; (9) Milford, Orange, West Haven, and New Haven, Connecticut; (10) East Haven, Branford, Guilford, Madison, Clinton, and Old Saybrook, Connecticut; (11) Fairfield, Stratford, Bridgeport, Trumbull, and Shelton, Connecticut; (12) South Kingstown and Narrangansett, Rhode Island; (13) the greater Providence, Rhode Island area, which includes East Providence, Providence, Pawtucket, Warwick, Cranston, Central Falls, Lincoln, Smithfield, Barrington, Bristol, Cumberland, North Providence, Johnston, West Warwick, East Greenwich, and Coventry, Rhode Island and Attleboro and Seekonk, Massachusetts; and (14) Chicopee, Massachusetts. In these areas, the proposed acquisition would leave a single firm with a market share substantially greater than 35 percent and would facilitate unilateral anticompetitive behavior or coordinated interaction. According to the draft complaint, these markets are highly concentrated and entry is difficult or unlikely. The Commission has reason to believe that the acquisition agreement violates Section 5 of the Federal Trade Commission Act and the acquisition, if consummated, would have anticompetitive effects and would violate Section 7 of the Clayton Act and Section 5 of the Federal Trade Commission Act, unless an effective remedy eliminates such anticompetitive effects.

Settlement Agreement

The agreement containing consent order would, if finally accepted by the Commission, settle charges that the acquisition may substantially lessen competition in the fourteen markets.

Proposed Divestiture and Proposed Purchases of Divested Assets

The agreement containing consent order seeks to remedy the Commission's competitive concerns about the acquisition by requiring divestiture of specified stores in each market. As with the recent consent agreements accepted by the Commission in *The Scotts Company* (Docket No. C–3613), *Illinois Tool Works, Inc.* (Docket No. C–3651), and most recently *Fresenius AG* (File No. 961–0053), the proposed order identifies both the assets to be divested and specific companies to be recommended to the Commission as purchasers for these assets. The identification of specific buyers for the assets to be divested will allow the public to comment on the effectiveness of the proposed relief in the context of specific proposed purchasers. It also minimizes the delay in restoring competition lost by the transaction and lessens the risk of unsuccessful divestiture.

Under the terms of the proposed order, Ahold must divest to Star Markets Company (1) its supermarket located at 295 Armistice Boulevard, Pawtucket, Rhode Island; (2) its supermarket located at 200 Niantic Avenue, Providence, Rhode Island; (3) its supermarket located at 1810 Plainfield Pike, Cranston, Rhode Island; (4) its supermarket located at 418 Kingstown Road, Wakefield, Rhode Island; (5) its supermarket located at 1401 Bald Hill Road, Warwick, Rhode Island; (6) its supermarket located at 1000 Division Street, East Greenwich, Rhode Island; and (7) the Stop & Shop supermarket located at Route 6 and 1 Commercial Way, Seekonk, Massachusetts. Star Markets Company, Inc., is a corporation with headquarters at 625 Mt. Auburn Street, Cambridge, Massachusetts.

Under the terms of the proposed order, Ahold must also divest to Bozzuto's Inc. (1) its supermarket located at 207 Hartford Turnpike, Vernon, Connecticut; (2) its supermarket located at Newbrite Plaza, 60 East Main Street, New Britain, Connecticut; (3) its supermarket located at 333 North Main Street, West Hartford, Connecticut; and (4) its supermarket located at 750 Queen Street, Southington, Connecticut. Bozzuto's Inc. is a corporation with headquarters at 275 Schoolhouse Road, Cheshire, Connecticut.

Under the terms of the proposed order, Ahold must also divest to Shaw's Supermarkets, Inc. (1) its supermarket located at 40 Hazard Avenue, Enfield, Connecticut; (2) its supermarket located at 953 Wolcott Road, Waterbury, Connecticut; (3) its supermarket located at 538 Boston Post Road, Orange, Connecticut; (4) its supermarket located at 875 Bridgeport Avenue, Shelton, Connecticut; (5) Stop & Shop supermarket number 665 located at 55 Welles Street, Glastonbury, Connecticut; (6) its lease agreement for the premises located in the former Rich's Department Store located at the Wakefield Mall, Tower Hill Road, South Kingstown, Rhode Island; (7) its supermarket located at 1100 Barnum Avenue, Stratford, Connecticut; (8) its lease agreement for the Grand Union Store site located at 800 Barnum Avenue, Stratford, Connecticut; (9) its supermarket located at 1975 Black Rock Turnpike, Fairfield, Connecticut; (10) its supermarket located at 1167 Main Street,

Watertown, Connecticut; (11) its supermarket located at 266 East Main Street, Clinton, Connecticut; (12) its supermarket located 60 Cantor Drive, Willimantic, Connecticut; (13) its supermarket located at 245 Kane Street, West Hartford, Connecticut; and (14) its supermarket located at 976 North Colony Road, Wallingford, Connecticut. Shaw's Supermarkets, Inc., is a corporation with headquarters at 140 Laurel Street, East Bridgewater, Massachusetts.

Under the terms of the proposed order, Ahold must also divest to Big Y Foods, Inc. (1) its supermarket located at 830 Boston Post Road, Guilford, Connecticut; (2) its supermarket located at 650 Memorial Drive, Chicopee, Massachusetts; (3) its supermarket located at West Main Route 44, Avon, Connecticut; (4) its supermarket located at 3 Kent Road, New Milford, Connecticut; and (5) its supermarket located at 265 Ellington Road, East Hartford, Connecticut. Big Y Foods, Inc., is a corporation with headquarters at 280 Chestnut Street, Springfield, Massachusetts.

The purpose of the divestitures to these purchasers is to ensure the continuation of the Assets to be Divested as ongoing viable enterprises engaged in the supermarket business and to remedy any lessening of competition resulting from the acquisition as alleged in the Commission's complaint.

Star, Bozzuto's, Shaw's, and Big Y already own and operate supermarkets. The management of each company has substantial experience in the supermarket business. Star and Bozzuto's do not operate supermarkets in the areas where the stores they are buying are located. Big Y and Shaw's operate, or will shortly, in a few of the markets where they are buying divested supermarkets. In these markets, however, Big Y and Shaw's are not now significant competitors, and the additional stores will make them more competitive against the combined Ahold/Stop & Shop.

Under the terms of the proposed order, Ahold must divest the assets to be divested within thirty (30) days after the proposed Order is made final by the Commission. Because the proposed order contemplates divestiture within 30 days to purchasers that have already been identified to the Commission, and because the proposed order includes a strong trustee provision and an Asset Maintenance Agreement, the Commission has not required a hold separate agreement in this case. Under the proposed order, if any of the divestitures are not accomplished within 30 days after the order is made final, then the Commission may appoint a trustee to divest the remaining assets. The trustee may, on his or her own initiative or at the direction of the Commission (and subject to Commission approval after a 30-day public comment period), add or substitute supermarkets in the overlap areas listed in the order so as to accomplish the required divestitures. This provision is important to insure that the divestitures will be made. Ahold is unlikely to permit the deterioration of any of the supermarkets to be divested, because to do so could ultimately invite a divestiture trustee to make a substitution, leaving Ahold with a store that had been allowed to deteriorate. The fact that the trustee provision can be invoked quickly, *i.e.*, within 30 days, also gives Ahold an incentive to complete the divestitures in a timely manner.

The purpose of this analysis is to invite public comment concerning the proposed order. This analysis is not intended to constitute an official interpretation of the agreement and order or to modify their terms in any way.

Donald S. Clark,

Secretary.

[FR Doc. 96–18857 Filed 7–24–96; 8:45 am]

BILLING CODE 6750–01–P

[File No. 962–3002]

Syncronys Softcorp; Rainer Poertner; Daniel G. Taylor; Wendell Brown; Proposed Consent Agreement With Analysis To Aid Public Comment

AGENCY: Federal Trade Commission.

ACTION: Proposed consent agreement.

SUMMARY: In settlement of alleged violations of federal law prohibiting unfair or deceptive acts or practices and unfair methods of competition, this consent agreement, accepted subject to final Commission approval, would prohibit, among other things, the Culver City, California-based computer software manufacturer and three of its officers from making performance claims about their SoftRAM and SoftRAM95 software programs or about any substantially similar product unless the claims were true and substantiated. The respondents are also prohibited from making any claims that a product intended to improve computer performance had been licensed, endorsed, authorized, or certified by any person or organization unless those claims were true. The consent agreement settles allegations that the respondents misrepresented and/or failed to substantiate the performance of these two products, which were advertised and promoted for their purported ability to improve the performance of personal computers using Microsoft, Inc.'s Windows and Windows 95 programs.

DATES: Comments must be received on or before September 23, 1996.

ADDRESSES: Comments should be directed to: FTC/Office of the Secretary, Room 159, 6th St. and Pa. Ave., NW., Washington, DC 20580.

FOR FURTHER INFORMATION CONTACT:

Michael Bloom, Federal Trade Commission, New York Regional Office, 150 William Street, Suite 1300, New York, NY 10038. (212) 264–1201.

Robin Eichen, Federal Trade Commission, New York Regional Office, 150 William Street, Suite 1300, New York, NY 10038. (212) 264–1250.

SUPPLEMENTARY INFORMATION: Pursuant to Section 6(f) of the Federal Trade Commission Act, 38 Stat. 721, 15 U.S.C. 46 and Section 2.34 of the Commission's Rules of Practice (16 CFR 2.34), notice is hereby given that the following consent agreement containing a consent order to cease and desist, having been filed with and accepted, subject to final approval, by the Commission, has been placed on the public record for a period of sixty (60) days. Public comment is invited. Such comments or views will be considered by the Commission and will be available for inspection and copying at its principal office in accordance with Section 4.9(b)(6)(ii) of the Commission's Rules of Practice (16 CFR 4.9(b)(6)(ii)).

Agreement Containing Consent Order

The Federal Trade Commission has conducted an investigation of certain acts and practices of Syncronys Softcorp, a corporation, Rainer Poertner, Daniel G. Taylor, and Wendell Brown, individually and as officers of the corporation (''proposed respondents''). Proposed respondents, having been represented by counsel, are willing to enter into an agreement containing a consent order resolving the allegations contained in the draft complaint. Therefore,

It is hereby agreed by and between Syncronys Softcorp, by its duly authorized officers, and Rainer Poertner, Daniel G. Taylor, and Wendell Brown, individually and as officers of the corporation, and counsel for the Federal Trade Commission that:

1.a. Proposed respondent Syncronys Softcorp is a Nevada corporation with its principal office or place of business at 3958 Ince Boulevard, Culver City, California 90232.

1.b. Proposed respondent Rainer Poertner is an officer of the corporate respondent. Individually or in concert with others, he formulates, directs, or controls the policies, acts, or practices of the corporation, including the acts or practices alleged in the draft complaint. His principal office or place of business is the same as that of Syncronys Softcorp.

1.c. Proposed respondent Daniel G. Taylor is an officer of the corporate respondent. Individually or in concert with others, he formulates, directs, or controls the policies, acts, or practices of the corporation, including the acts or practices alleged in the draft complaint. His principal office or place of business is the same as that of Syncronys Softcorp.

1.d. Proposed respondent Wendell Brown is an officer of the corporate respondent. Individually or in concert with others, he formulates, directs, or controls the policies, acts, or practices of the corporation, including the acts or practices alleged in the draft complaint. His principal office or place of business is the same as that of Syncronys Softcorp.

2. Proposed respondents admit all the jurisdictional facts set forth in the draft complaint.

3. Proposed respondents waive:

a. Any further procedural steps;

b. The requirement that the Commission's decision contain a statement of findings of fact and conclusions of law; and

c. All rights to seek judicial review or otherwise to challenge or contest the validity of the order entered pursuant to this agreement.

4. This agreement shall not become part of the public record of the proceeding unless and until it is accepted by the Commission. If this agreement is accepted by the Commission, it, together with the draft complaint, will be placed on the public record for a period of sixty (60) days and information about it publicly released. The Commission thereafter may either withdraw its acceptance of this agreement and so notify proposed respondents, in which event it will take such action as it may consider appropriate, or issue and serve its complaint (in such form as the circumstances may require) and decision in disposition of the proceeding.

5. This agreement is for settlement purposes only and does not constitute an admission by proposed respondents that the law has been violated as alleged in the draft complaint, or that the facts as alleged in the draft complaint, other than the jurisdictional facts, are true.

6. This agreement contemplates that, if it is accepted by the Commission, and if such acceptance is not subsequently withdrawn by the Commission pursuant to the provisions of Section 2.34 of the Commission's Rules, the Commission may, without further notice to proposed respondents, (1) issue its complaint corresponding in form and substance with the draft complaint and its decision containing the following order in disposition of the proceeding, and (2) make information about it public. When so entered, the order shall have the same force and effect and may be altered, modified, or set aside in the same manner and within the same time provided by statute for other orders. The order shall become final upon service. Delivery of the complaint and the decision and order to proposed respondents by any means specified in Section 4.4 of the Commission's Rules shall constitute service. Proposed respondents waive any right they may have to any other manner of service. The complaint may be used in construing the terms of the order. No agreement, understanding, representation, or interpretation not contained in the order or in the agreement may be used to vary or contradict the terms of the order.

7. Proposed respondents have read the draft complaint and consent order. They understand that they may be liable for civil penalties in the amount provided by law and other appropriate relief for each violation of the order after it becomes final.

Order

Definitions

For purposes of this order, the following definitions shall apply:

1. ''Random access memory (RAM)'' is the primary working memory in a computer. The instructions provided by a computer program and the data being worked on are stored in RAM while the program is running. Additional RAM, measured in megabytes (''MBs''), can be purchased in the form of microchips that are physically inserted into a computer.

2. ''Compression technology'' is a process which allows more information to reside in RAM. Compression technology eliminates redundant data by utilizing various recipes for analyzing and transforming it.

3. ''Windows 95'' refers to the Windows 95 software operating system manufactured by Microsoft, Inc.

4. ''Substantially similar product'' shall mean any software product that uses or purports to use compression technology and that is intended or purports to increase the amount of RAM in a computer or to accomplish any effect similar to one that would be caused by increasing the amount of RAM in a computer. These effects include, but are not limited to, increase in speed of computer operations, increase in size or number of applications that can be run simultaneously, and expansion of systems resources or reduction or elimination of ''insufficient memory'' errors or messages.

5. ''Competent and reliable scientific evidence'' shall mean tests, analyses, research, studies, or other evidence based on the expertise of professionals in the relevant area, that has been conducted and evaluated in an objective manner by persons qualified to do so, using procedures generally accepted in the profession to yield accurate and reliable results.

6. Unless otherwise specified, ''respondents'' shall mean Syncronys Softcorp, a corporation, its successors and assigns and its officers; Rainer Poertner, Daniel G. Taylor, and Wendell Brown, individually and as officers of the corporation and each of the above's agents, representatives, and employees.

7. ''In or affecting commerce'' shall mean as defined in Section 4 of the Federal Trade Commission Act, 15 U.S.C. 44.

I

It is ordered that respondents, directly or through any corporation, subsidiary, division, or other device, in connection with the manufacturing, labeling, advertising, promotion, offering for sale, sale, or distribution of SoftRAM^{95} or any substantially similar product in or affecting commerce, shall not misrepresent, in any manner, expressly or by implication, that:

A. Such product increases RAM in a computer using Windows 95 to a greater extent than other software products;

B. Such product uses compression technology to increase the RAM available to a computer using Windows 95 or achieves RAM compression ratios of up to five times or higher in a computer using Windows 95;

C. Such product produces the effect of increasing the RAM available to a computer using Windows 95;

D. Use of such product in a computer will speed up Windows 95;

E. Use of such product will permit a Windows 95 user to run larger applications on a computer or to open more applications simultaneously;

F. Use of such product with Windows 95 will result in expanded systems resources on a computer and will substantially reduce or eliminate the occurrence of computer screen messages that indicate that the computer has insufficient memory to run the user's application(s); or

G. Microsoft, Inc. has licensed, endorsed, or otherwise approved such product for use with Windows 95.

II

It is further ordered that respondents, directly or through any corporation, subsidiary, division, or other device, in connection with the manufacturing, labeling, advertising, promotion, offering for sale, sale, or distribution of SoftRAM, SoftRAM^{95}, or any substantially similar product in or affecting commerce, shall not make any representation, in any manner, expressly or by implication, about the

relative or absolute performance, attributes, benefits, or effectiveness of such product, unless such representation is true and, at the time of making such representation, respondents possess and rely upon competent and reliable evidence, which when appropriate must be competent and reliable scientific evidence, that substantiates the representation.

III

It is further ordered that respondents, directly or through any corporation, subsidiary, division, or other device, in connection with the manufacturing, labeling, advertising, promotion, offering for sale, sale, or distribution of any product intended to improve the performance of any computer in or affecting commerce, shall not make any representation, in any manner, expressly or by implication, that such product has been authorized, certified, licensed, endorsed, or otherwise approved by any person or organization, unless such representation is true.

IV

It is further ordered that respondents, directly or through any corporation, subsidiary, division, or other device, in connection with the manufacturing, labeling, advertising, promotion, offering for sale, sale, or distribution of any product intended to improve the performance of any computer in or affecting commerce, shall not make any representation, in any manner, expressly or by implication, about the relative or absolute performance, attributes, benefits, or effectiveness of such product, unless, at the time it is made, respondents possess and rely upon competent and reliable evidence, which when appropriate must be competent and reliable scientific evidence, that substantiates the representation.

V

It is further ordered that respondents shall, for five (5) years after the last date of dissemination of any representation covered by this order, maintain and, within ten (10) business days of their receipt of a written request, make available to the Federal Trade Commission for inspection and copying:

A. All advertisements and promotional materials containing the representation;

B. All materials that were relied upon in disseminating the representation; and

C. All tests, reports, studies, surveys, demonstrations, or other evidence in their possession or control that contradict, qualify, or call into question the representation, or the basis relied upon for the representation, including complaints and other communications with consumers or with governmental or consumer protection organizations.

VI

It is further ordered that respondent Syncronys Softcorp and its successors and assigns shall deliver a copy of this order to all current and future principals, officers, directors, and managers, and to all current and future employees, agents, and representatives having responsibilities with respect to the subject matter of this order, and shall secure from each such person a signed and dated statement acknowledging receipt of the order. Respondent Syncronys Softcorp and its successors and assigns shall deliver this order to current personnel within thirty (30) days after the date of service of this order, and to future personnel within thirty (30) days after the person assumes such position or responsibilities.

VII

It is further ordered that respondent Syncronys Softcorp and its successors and assigns shall notify the Commission at least thirty (30) days prior to any change in the corporation that may affect compliance obligations arising under this order, including but not limited to a dissolution, assignment, sale, merger, or other action that would result in the emergence of a successor corporation; the creation or dissolution of a subsidiary, parent, or affiliate that engages in any acts or practices subject to this order; the proposed filing of a bankruptcy petition; or a change in the corporate name or address. *Provided, however,* that, with respect to any proposed change in the corporation about which respondents learn less than thirty (30) days prior to the date such action is to take place, respondents shall notify the Commission as soon as is practicable after obtaining such knowledge. All notices required by this Part shall be sent by certified mail to the Associate Director, Division of Enforcement, Bureau of Consumer Protection, Federal Trade Commission, Washington, D.C. 20580.

VIII

It is further ordered that respondents Rainer Poertner, Daniel G. Taylor, and Wendell Brown, for a period of five (5) years after the date of issuance of this order, shall each notify the Commission of the discontinuance of his current business or employment, or of his affiliation with any company engaged in the manufacturing, labeling, advertising, promotion, offering for sale, sale, or distribution of any product intended to improve the performance of any computer in or affecting commerce. The notice shall include respondent's new business address and telephone number and a description of the nature of the business or employment and his duties and responsibilities. All notices required by this Part shall be sent by certified mail to the Associate Director, Division of Enforcement, Bureau of Consumer Protection, Federal Trade Commission, Washington, D.C. 20580.

IX

It is further ordered that respondents shall, within sixty (60) days after the date of service of this order, and at such other times as the Federal Trade Commission may require, file with the Commission a report, in writing, setting forth in detail the manner and form in which they have complied with this order.

X

This order will terminate twenty (20) years from the date of its issuance, or twenty (20) years from the most recent date that the United States or the Federal Trade Commission files a complaint (with or without an accompanying consent decree) in federal court alleging any violation of the order, whichever comes later; *provided, however,* that the filing of such a complaint will not affect the duration of:

A. Any Part in this order that terminates in less than twenty (20) years;

B. This order's application to any respondent that is not named as a defendant in such complaint; and

C. This order if such complaint is filed after the order has terminated pursuant to this Part.

Provided, further, that if such complaint is dismissed or a federal court rules that the respondent did not violate any provision of the order, and the dismissal or ruling is either not appealed or upheld on appeal, then the order will terminate according to this Part as though the complaint had never been filed, except that the order will not terminate between the date such complaint is filed and the later of the deadline for appealing such dismissal or ruling and the date such dismissal or ruling is upheld on appeal.

Analysis of Proposed Consent Order To Aid Public Comment

The Federal Trade Commission has accepted an agreement to a proposed consent order from Syncronys Softcorp, Rainer Poertner, Daniel G. Taylor, and Wendell Brown. The proposed respondents are marketers of computer

software products, including SoftRAM and SoftRAM95.

The proposed consent order has been placed on the public record for sixty (60) days for reception of comments by interested persons. Comments received during this period will become part of the public record. After sixty (60) days, the Commission will again review the agreement and the comments received and will decide whether it should withdraw from the agreement and take other appropriate action or make final the agreement's proposed order.

The Commission's complaint charges that the proposed respondents made the following unsubstantiated representations about SoftRAM: (1) SoftRAM uses compression technology to double the random access memory (''RAM'') available to a computer using any of Microsoft, Inc.'s Windows 3.0, 3.1, or 3.11 operating systems (collectively ''Windows 3.x''); (2) SoftRAM produces the effect of doubling RAM in a computer using Windows 3.x; (3) use of SoftRAM will permit a Windows 3.x user to open more applications simultaneously on a computer; and (4) use of SoftRAM in a computer using Windows 3.x will substantially reduce or eliminate the occurrence of computer screen messages that indicate insufficient memory.

With respect to SoftRAM95, the complaint charges that the proposed respondents made the following unsubstantiated representations: (1) SoftRAM95 increases RAM in a computer using Microsoft, Inc.'s Windows 95 operating system (''Windows 95'') to a greater extent than other software products; (2) SoftRAM95 uses compression technology to at least double the RAM available to a computer using Windows 3.x or Windows 95, and achieves RAM compression ratios of up to five times and higher in such a computer; (3) SoftRAM95 produces the effect of at least doubling RAM in a computer using Windows 3.x or Windows 95; (4) use of SoftRAM95 in a computer will speed up Windows 3.x or Windows 95; (5) use of SoftRAM95 will permit a Windows 3.x or Windows 95 user to run larger applications on a computer, and to open more applications simultaneously; and (6) use of SoftRAM95 with Windows 3.x or Windows 95 will result in expanded systems resources on a computer and will substantially reduce or eliminate the occurrence of computer screen messages that indicate insufficient memory. The complaint also charges that claims (1) through (6) are false to the extent that they apply to use of SoftRAM95 with Windows 95. Further, the complaint charges that the proposed respondents have falsely represented that Microsoft, Inc. has licensed, endorsed, or otherwise approved SoftRAM95 for use with Windows 95.

The proposed consent order contains provisions designed to remedy the violations charged and to prevent proposed respondents from engaging in similar acts in the future.

Part I of the proposed order, in connection with SoftRAM95 or any substantially similar product, prohibits the proposed respondents from misrepresenting that: (1) such product increases RAM in a computer using Windows 95 to a greater extent than other software products; (2) such product uses compression technology to increase the RAM available to a computer using Windows 95 or achieves RAM compression ratios of up to five times or higher in a computer using Windows 95; (3) such product produces the effect of increasing the RAM available to a computer using Windows 95; (4) use of such product in a computer will speed up Windows 95; (5) use of such product will permit a Windows 95 user to run larger applications on a computer or to open more applications simultaneously; (6) use of such product with Windows 95 will result in expanded systems resources on a computer and will substantially reduce or eliminate the occurrence of computer screen messages that indicate that the computer has insufficient memory to run the user's application(s); or (7) Microsoft, Inc. has licensed, endorsed, or otherwise approved such product for use with Windows 95.

Part II of the proposed order prohibits any representation which relates to the relative or absolute performance, attributes, benefits, or effectiveness of SoftRAM, SoftRAM95, or any substantially similar product, unless such representation is true and proposed respondents possess and rely upon competent and reliable evidence that substantiates the representation. Part III of the proposed order prohibits the proposed respondents from representing that any product intended to improve the performance of any computer has been authorized, certified, licensed, endorsed, or otherwise approved by any person or organization, unless such representation is true. In addition, Part IV prohibits any representation which relates to the relative or absolute performance, attributes, benefits, or effectiveness of any product intended to improve the performance of any computer, unless proposed respondents possess and rely upon competent and reliable evidence that substantiates the representation.

The proposed order (Part V) contains recordkeeping requirements for materials that substantiate, qualify, or contradict covered claims and requires the proposed respondents to keep and maintain all advertisements and promotional materials containing any representation covered by the proposed order. In addition, the proposed order (Part VI) requires distribution of a copy of the consent decree to current and future officers and agents. Further, Part VII provides for Commission notification upon a change in the corporate respondent and Commission notification when each of the individual respondents changes his present business or employment (Part VIII). The proposed order also requires the filing of compliance report(s) (Part IX).

Finally, Part X provides for the termination of the order after twenty years under certain circumstances.

The purpose of this analysis is to facilitate public comment on the proposed order, and it is not intended to constitute an official interpretation of the agreement and proposed order or to modify in any way their terms.

Donald S. Clark,

Secretary.

[FR Doc. 96–18856 Filed 7–24–96; 8:45 am]

BILLING CODE 6750–01–U

GENERAL SERVICES ADMINISTRATION

Privacy Act of 1974; System of Record

AGENCY: General Services Administration (GSA).

ACTION: Notice to amend a record system that is subject to the Privacy Act of 1974.

SUMMARY: GSA proposes amending a record system that is subject to the Privacy Act of 1974 (5 U.S.C. 522a), as amended.

DATES: The proposed action becomes effective 30 days after the publication of this notice, unless comments received result in a contrary decision.

ADDRESSES: Send comments to Ms. Elaine P. Dade, Acting Records Officer, 18th and F Streets NW., Washington, DC 20405.

FOR FURTHER INFORMATION CONTACT: Wm. McHugh, Privacy Act Liaison (202) 501–2983).

SUPPLEMENTARY INFORMATION: The record system Investigation Case Files, GSA/ASM–24, is used for deciding employment suitability, issuing subpoenas and security clearances; and taking civil, criminal, and administrative actions.

The changes to the record system are set forth below. The proposed amendments do not fall within the scope of subsection (r) of the Privacy Act of 1974, which requires submitting a new or altered system report.

Dated July 17, 1996.

Kenneth S. Stacey,

Acting Director, Information Management Division.

System name:

Investigation Case Files.

Changes:

System location:

Delete entry and insert: ''The system is located in the Office of Inspector General, 18th and F Streets NW., Washington, DC 20405. The data base for the system, known as the Investigative Information System (IIS), is on a local area network and is located in room 5315 of the GS Building. The IIS is operated by the System Development and Support Division of the Office of Inspector General (JPM).''

Authority for maintenance of the system:

The citation to the United States Code should read ''5 U.S.C., App. 3, sec. 2 et seq.'' The citation to the first Executive Order should read ''EO 10450.'' Also, the second citation to the United States Code should read ''40 U.S.C., secs. 275a through a–7, 276c, 318 (a) through (d), and 327 through 331.''

Routine uses of records maintained in the system, including categories of users and the purposes of such uses:

For routine use 1(C), add the quoted words below: A record related to a case or matter may be disclosed in an appropriate Federal, State, local, or foreign court or grand jury proceeding in accordance with established constitutional, substantive or procedural law or practice, ''even when the agency is not a party to the litigation.''

For routine use 1(h), the quoted words represent updated material: A record may be ''disclosed'' to a Federal agency, in response to its request, in connection with the hiring or retention of an employee, the issuing of a security clearance, the reporting of an investigation of an employee, ''the reporting of an arrest or investigative information, or disposition thereof, of an employee received from a State, local, or Federal law enforcement unit,'' the letting of a contract, or the issuing of a license, grant, or other benefit by the requesting agency to the extent that the information relates to the requesting agency's decision on the matter;* * *.

For routine use 2, the first part of the sentence should read: ''A record from this system of records * * *.'' Also, the quoted words below provide more specific information: Grievance, complaint, appeal: A record from this system of records may be disclosed to an authorized official engaged in investigation or settlement of a grievance, complaint, or appeal filed by an employee, ''which includes matters and investigations involving the Merit Systems Protection Board or the Office of Special Counsel.'' A record from the system or records may be disclosed to the United States Office of Personnel Management in accordance with the agency's responsibility for evaluation of Federal personnel management.

For routine use 4, the second part of the first sentence should read ''* * * as set forth in OMB Circular No. A–19 at any stage of the legislative clearance process.''

For routine use 5, the quoted words below represent new information: a record from this system of records may be disclosed as a routine use (a) to an expert, a consultant, or a contractor of GSA ''engaged in a duty related to an agency function'' to the extent necessary to further the performance of ''and agency function'' and (b) to a physician to conduct a fitness-for-duty examination of a GSA officer or employee.

For all routine uses, the verb ''disclose'' is used in place of ''disseminate.''

Storage:

Delete entry and insert: ''Paper records are kept in files and file folders, and electronic records are kept on hard or floppy disks and on tapes.''

Retrievability:

Delete entry and insert: ''Paper records are retrievable by name from files indexed alphabetically and filed numerically by location and incident. Electronic records are retrievable by letter or number.''

Safeguards:

Delte entry and insert: ''Paper records are stored in locked, alarmed vault-type rooms or in locked safes with access limited to authorized persons. Computer-based records are available only to authorized users with a need to know and are protected by a network logon password, user password, and right of access to the software, system (IIS), file, date element, and report.''

Retention and disposal:

Delete entry and insert: ''The records are destroyed by shredding or burning as scheduled in the handbook, GSA Records Maintenance and Disposition System (OAD P 1820.2A).''

System manager and address:

Delete entry and insert: ''The system manager is an employee of the Investigations Operations Division (JIB) of the Office of Inspector General, Room 5321, 18th and F Streets NW., Washington, DC 20405.''

Notification procedure:

Delete entry and insert: ''An individual who wishes to be notified whether the system contains a record concerning him- or herself should address a request to the Office of Counsel to the Inspector General (JC), General Services Administration, Room 5324, 18th and F Streets NW., Washington, DC 20405.''

Record access procedures:

Delete entry and insert: ''An individual seeking access to a record should put his or her request in writing and address it to the Office of Counsel to the Inspector General (JC), including full name (maiden name if appropriate), address, and date and place of birth. General inquiries may be made by telephone.''

Contesting record procedures:

Delete entry and insert: ''GSA rules for contesting the content of a record or appealing the denial of a request to amend a record are in 41 CFR part 105–64, published in the Federal Register.''

GSA/ADM–24 (23–00–0024)

SYSTEM NAME:

Investigation Case Files.

SECURITY CLASSIFICATION:

Some of the material contained in the system has been classified in the interest of national security pursuant to EO 11652.

SYSTEM LOCATION:

The system is located in the Office of Inspector General, 18th and F Streets NW., Washington, DC 20405. The data base for the system, known as the Investigative Information System (IIS), is on a local area network in room 5315 of the GS Building. The IIS is operated by the System Development and Support Division of the Office of Inspector General (JPM).

CATEGORIES OF INDIVIDUALS COVERED BY THE SYSTEM:

The individuals covered by the system are employees, former employees, applicants for employment with GSA, and commissions, committees, and small agencies serviced

by GSA. It includes historical researchers, employees of contractors performing custodial or guard services in buildings under GSA control, any person who was the source of a complaint or an allegation that a crime had taken place, a witness who has information or evidence on any side of an investigation, and any possible or actual suspect in a criminal, administrative, or civil action.

CATEGORIES OF RECORDS IN THE SYSTEM:

Investigative files contain information such as name, date and place of birth, experience, and investigative material. The records are used as a basis for issuance of subpoenas, security clearances, suitability decisions; and civil, criminal, and administrative actions.

AUTHORITY FOR MAINTENANCE OF THE SYSTEM:

5 U.S.C. App. 3, sec. 2 et seq.; Executive Order (EO) 10450, April 27, 1953; EO 11246, September 24, 1965; EO 11478, August 8, 1969; EO 11652, March 8, 1972 and 40 U.S.C. secs. 276 a through a–7, 276c, 318 (a) through (d), and 327 through 331.

PURPOSE(S):

The system serves as the basis for deciding employment suitability, issuing security clearances and subpoenas; and taking civil, criminal, and administrative actions.

ROUTINE USES OF RECORDS IN THE SYSTEM, INCLUDING CATEGORIES OF USERS AND THE PURPOSES FOR SUCH USES:

The records are used by GSA officials and representatives of other Government agencies on a need-to-know basis in performing their official duties under the authorities set forth above and for the following routine uses.

1. Records maintained by the Office of Inspector General may be disclosed as follows:

a. A record of any case in which there is an indication of a violation of law, whether civil, criminal, or regulatory in nature, may be disclosed to the appropriate Federal, State, local, or foreign agency charged with the responsibility for investigating or prosecuting the violation or charged with enforcing or implementing the law.

b. A record may be disclosed to a Federal, State, local, or foreign agency or to an organization in the course of investigating a potential or actual violation of any law, whether civil, criminal, or regulatory in nature, or during the course of a trial or hearing or in preparing for a trial or hearing on such a violation, if there is reason to believe that the agency, individual, or organization possesses information related to the investigation and disclosing information is reasonably necessary to elicit such information or to obtain the cooperation of a witness or an informant.

c. A record related to a case or matter may be disclosed in an appropriate Federal, State, local, or foreign court or grand jury proceeding in accordance with established constitutional, substantive, or procedural law or practice, even when the agency is not a party to the litigation.

d. A record related to a case or matter may be disclosed to an actual or potential party or to his or her attorney for the purpose of negotiation or discussion on matters such as settlement of the case or matter, plea bargaining, or informal discovery proceedings.

e. A record related to a case or matter that has been referred by an agency for investigation, prosecution, or enforcement or that involves a case or matter within the jurisdiction of any agency may be disclosed to the agency to notify it of the status of the case or matter or of any determination or decision that has been made or to make such other inquiries and reports as are necessary during the processing of the case or matter.

f. A record related to a case or matter may be disclosed to a foreign country under an international treaty or convention ratified by the United states or by Executive agreement.

g. A record may be disclosed to a Federal, State, local, foreign, or international law enforcement agency to assist in crime prevention and detection or to provide leads for investigation.

h. A record may be disclosed to a Federal agency in connection with the hiring or retaining of an employee, the issuance of a security clearance, the reporting of an investigation of an employee, the reporting of an arrest or investigative information or the disposition thereof, or an employee received from a State, local, or Federal law enforcement unit, the letting of a contract, or the issuing of a license, grant, or other benefit by the requesting agency, to the extent that the information relates to the requesting agency's decision on the matter.

i. A record may be disclosed to the public, news media, trade associations, or organized groups when the purpose is educational or informational, such as describing crime trends or a distinctive modus operandi, provided the record does not identify a specific individual.

2. A record may be disclosed to an appeal or grievance examiner, formal complaints examiner, equal opportunity investigator, arbitrator, or other authorized official engaged in investigation or settlement of a grievance, complaint, or appeal filed by an employee. This includes matters and investigations involving the Merit Systems Protection Board or the Office of Special Counsel. A record may also be disclosed to the Untied States Office of Personnel Management under the agency's responsibility for evaluating Federal personnel management.

3. A record may be disclosed to a Member of Congress or to a congressional staff member in response to a request from the person who is the subject of the record.

4. Information may be disclosed to the Office of Management and Budget for reviewing private relief legislation as set forth in OMB Circular No. A–19 at any stage of the legislative clearance process.

5. A record may be disclosed (a) to an expert, consultant, or contractor of GSA engaged in a duty related to an agency function to the extent necessary to perform the function and (b) to a physician to conduct a fitness-for-duty examination of a GSA officer or employee.

POLICIES AND PRACTICES FOR STORING, RETRIEVING, REVIEWING, RETAINING, AND DISPOSING OF RECORDS IN THE SYSTEM:

STORAGE:

Paper records are kept in files and file folders, and electronic records are stores on hard or floppy disks and on tapes.

RETRIEVABILITY:

Paper records are retrievable manually by name from files indexed alphabetically and filed numerically by location and incident. Electronic records are retrievable by number or letter.

SAFEGUARDS:

Paper records are stored in locked, alarmed vault-type rooms or in a locked safe with access limited to authorized persons. Computer-based records are available only to authorized users with a need to know and are protected by a network logon password, user password, and right of access to the software, system (IIS), file, date element, and report.

RETENTION AND DISPOSAL:

The records are disposed of by shredding or burning, as scheduled in the handbook, GSA Records Maintenance and Disposition System (OAD P 1820.2A).

SYSTEM MANAGER(S) AND ADDRESS:

The system manager is an employee of the Investigations Operations

Division (JIB) of the Office of Inspector General, Room 5321, 18th and F Streets, NW., Washington, DC 20405.

NOTIFICATION PROCEDURE:

An individual who wishes to be notified whether the system contains a record concerning him- or herself should address a request to the Office of Counsel to the Inspector General (JC), General Services Administration, Room 5324, 18th and F Streets, NW., Washington, DC 20405.

RECORD ACCESS PROCEDURE:

An individual seeking access to a record should put his or her request in writing and address it to the Office of Counsel to the Inspector General (JC), including full name (maiden name if appropriate), address, and date and place of birth. General inquiries may be made by telephone.

CONTESTING RECORD PROCEDURE:

GSA rules for contesting the content of a record or appealing a denial of a request to amend a record are in 41 CFR part 105–64, codified in the Code of Federal Regulations.

RECORD SOURCE CATEGORIES:

The sources are individuals, employees, informants, law enforcement agencies, other Government agencies, employers, reference, co-workers, neighbors, educational institutions, and intelligence sources.

SYSTEM EXEMPT FROM CERTAIN PROVISIONS OF THE ACT:

Under 5 U.S.C. 552a(j), the record system is exempt from the Privacy Act of 1974 except subsections (b); (c) (1) and (2); (e)(4) (A) through (F); (e) (6), (7), (9), (10) and (11); and (i) of the Act, to the extent that the information in the system relates to enforcing criminal laws, including police efforts to prevent, control, or reduce crime or to arrest criminals; to the activities of prosecutors, courts, and correctional, probation, pardon, or parole authorities; and to (1) information compiled to identify criminal offenders and alleged offenders and consisting only of identifying data and notations of arrests, and nature and disposition of criminal charges, sentencing, confinement, release, and parole and probation status; (2) information compiled for criminal investigation, including reports of informants and investigators that is associated with an identifiable person; or (3) reports of criminal law enforcement, from arrest or indictment through release from supervision. The system is exempted to maintain the efficiency and integrity of law enforcement by the Office of Inspector General.

Under 5 U.S.C. 552a(k), this system of records is exempt from subsections (c)(3); (d); (e)(1); (e)(4) (G), (H), and (I) and (f) of the Privacy Act of 1974. The system is exempt:

a. To the extent that the system consists of investigative material compiled for law enforcement; however, if any individual is denied any right, privilege, or benefit to which he or she would otherwise be eligible as a result of maintaining such material, the material will be provided to the individual, except to the extent that disclosing it would reveal the identity of a source who furnished information to the Government under an express promise that the identity of the source would be held in confidence, or, before the effective date of the Act, under an implied promise that the identity of the source would be held in confidence; and

b. To the extent that the system consists of investigative material compiled solely for deciding suitability, eligibility, or qualification for Federal civilian employment, military service, Federal contracts, or access to classified information, but only to the extent that disclosing the material would reveal the identity of a source who furnished information to the Government under an express promise that the identify of the source would be held in confidence, or, before the effective date of the Act, under an implied promise that the identity of the source would be held in confidence.

The system of records has been exempted to maintain the efficiency and integrity of lawful investigations conducted under the Office of Inspector General's law enforcement responsibilities, and responsibilities in the areas of Federal employment, Government contracts, and access to security-classified information.

[FR Doc. 96–18946 Filed 7–24–96; 8:45 am]

BILLING CODE 6820–30–M

HARRY S. TRUMAN SCHOLARSHIP FOUNDATION

Proposed Collection; Comment Request

ACTION: Notice.

SUMMARY: This notice announces that the Nominee Information Form (NIF) is coming up for renewal. This is the application that candidates are required to complete to be considered for a Truman Scholarship. Before submitting the renewal package to the Office of Management and Budget, the Harry S. Truman Scholarship Foundation (Foundation) is soliciting comments on the specific aspects of the information collection as described below. The Foundation proposes to renew the NIF without making any changes.

DATES: Comments must be submitted on or before September 23, 1996.

ADDRESSES: Bring or submit written comments to: Mrs. Tonji Wade Barrow, Harry S. Truman Scholarship Foundation, 712 Jackson Place, NW, Washington, DC 20006. Copies of the NIF may be obtained by writing to the Foundation or from the World Wide Web [http:/www.act.org/truman]. Comments may be submitted electronically to hstsf@access.digex.com. All written comments will be available for public inspection at the Foundation at the address given above from 8:00 a.m. to 5:00 p.m., Monday through Thursday, excluding legal holidays.

FOR FURTHER INFORMATION CONTACT: Mrs. Tonji Barrow, Senior Program Assistant, telephone 202–395–7430.

I. Information Collection Request

The Foundation is seeking comments on the following request.

Title: Nominee Information Form, OMB No. 3200–0004. Approved for use through 11/30/96.

Affected entities: Parties affected by this information collection are college juniors who wish to compete for Truman Scholarships.

Abstract: PL 93–642 authorizes the Foundation to provide for the conduct of a national competition for the purpose of selecting Truman scholars. The purpose of this information collection through the NIF is to enable a committee to review the credentials of applicants and to determine which appear to meet the selection criteria and should be designated as Finalists and invited to an interview. For persons invited to the interview, the information collection through the NIF helps the Truman Scholars Selection Panel make its decisions after interviewing the Finalists. Data collected include: schools attended; campus, community and government activities and services; awards received; leadership and public service interests and ambitions; graduate study plans; and other information that candidates deem significant. It also includes a 700–800 analysis of a public policy issue chosen by the applicant to demonstrate analytical and writing skills. The data are used only by Foundation staff or selection committees except for items that may be used to publicize the

program, to provide examples to help candidates in future years, or aggregated for educational research purposes.

Likely respondents: The likely respondents consist of 800–900 college juniors who wish to receive support from the Foundation to attend graduate school in preparation for careers in the public service. Each applicant is required to submit this application only once. He/she is also required to provide four letters of recommendation including one from the Truman Scholarship Faculty Representative at his/her institution:

Burden Statement: The current total annual respondent burden is estimated at 20,000 hours based on 800 applicants spending 25 hours each on the application and the public policy analysis.

II. Request for Comments

The Foundation solicits comments to:

(1) evaluate whether the proposed collection of information is necessary for the proper performance of the functions of the Foundation, including whether the information will have practical utility;

(2) evaluate the accuracy of the Foundation's estimate of the burden of the proposed collection of the information;

(3) enhances the quality, utility, and clarity of the information to be collected; and

(4) minimize the burden of the collection of information on those who are to respond.

III. Public Docket

A public version of this record, including printed, paper versions of electronic comments is available for inspection from 8:00 a.m. to 5:00 p.m., Monday through Thursday, excluding legal holidays. The public record is located at 712 Jackson Place, NW, third Floor, Washington, DC 20006.

Written comments may be delivered or mailed to the Foundation at this address. Electronic comments can be sent directly to hstsf@access.digex.com.

Dated: July 19, 1996.

Louis H. Blair,

Executive Secretary, Harry S. Truman Scholarship Foundation.

[FR Doc. 96–18888 Filed 7–24–96; 8:45 am]

BILLING CODE 4738–10–M

DEPARTMENT OF HEALTH AND HUMAN SERVICES

Agency for Toxic Substances and Disease Registry

[ATSDR–113]

Quarterly Public Health Assessments and Addendum Completed

AGENCY: Agency for Toxic Substances and Disease Registry (ATSDR), Department of Health and Human Services (HHS).

ACTION: Notice.

SUMMARY: This notice is a quarterly announcement that contains a list of each site for which ATSDR has completed a public health assessment or issued an addendum to a previously completed public health assessment during the period January–March 1996. This list includes sites that are on, or proposed for inclusion on, the National Priorities List (NPL).

FOR FURTHER INFORMATION CONTACT: Robert C. Williams, P.E., DEE, Director, Division of Health Assessment and Consultation, Agency for Toxic Substances and Disease Registry, 1600 Clifton Road, NE., Mailstop E–32, Atlanta, Georgia 30333, telephone (404) 639–0610.

SUPPLEMENTARY INFORMATION: The most recent list of completed public health assessments and public health assessments with addenda was published in the Federal Register on April 29, 1996, [61 FR 18743]. The quarterly announcement is the responsibility of ATSDR under the regulation Public Health Assessments and Health Effects Studies of Hazardous Substances Releases and Facilities [42 CFR Part 90]. This rule sets forth ATSDR's procedures for the conduct of public health assessments under section 104(i) of the Comprehensive Environmental Response, Compensation, and Liability Act (CERCLA), as amended by the Superfund Amendments and Reauthorization Act (SARA) [42 U.S.C. 9604(i)].

Availability

The completed public health assessments and addendum are available for public inspection at the Division of Health Assessment and Consultation, Agency for Toxic Substances and Disease Registry, Building 33, Executive Park Drive, Atlanta, Georgia (not a mailing address), between 8 a.m. and 4:30 p.m., Monday through Friday except legal holidays. The completed public health assessments are also available by mail through the U.S. Department of Commerce, National Technical Information Service (NTIS), 5285 Port Royal Road, Springfield, Virginia 22161, or by telephone at (703) 487–4650. NTIS charges for copies of public health assessments and addenda. The NTIS order numbers are listed in parentheses following the site names. Public Health Assessments and Addendum Completed or Issued Between January 1, 1996, and March 31, 1996, public health assessments and one addendum were issued for the sites listed below:

NPL Sites

Illinois

Central Illinois Public Service Company—Taylorville—(PB96–137294)

Louisiana

Petro-Processors of Louisiana Incorporated—Baton Rouge—(PB96–137351)

Maryland

Ordnance Products, Incorporated—Northeast—(PB96–162870)

New Jersey

A.O. Polymer—Sparta Township—(PB96–154497)

New Mexico

Cal West Metals (USSBA)—Lemitar—(PB96–139688)

New York

Islip Municipal Sanitary Landfill (a/k/a Blydenburgh Road Landfill)—Hauppauge—(PB96–139316)

Ohio

Dover Chemical Corporation—Dover—(PB96–135546)

Oklahoma

Tinker Air Force Base (Soldier CR/Building 3001)—Midwest City—(PB96–146113)

Pennsylvania

Butz Landfill—Jackson Township—(PB96–162326) East Tenth Street (a/k/a FMC Corporation-Marcus Hook Plant—Marcus Hook—(PB96–162318)

Dated: July 18, 1996.

Claire V. Broome,

Deputy Administrator, Agency for Toxic Substances and Disease Registry.

[FR Doc. 96–18891 Filed 7–24–96; 8:45 am]

BILLING CODE 4163–70–P

Administration for Children and Families

Privacy Act of 1974; System of Records and Technical Correction to Computer Matching Programs

AGENCY: Office of Child Support Enforcement (OCSE), ACF, DHHS.

ACTION: Amendment of existing system of records and technical correction of Notice of Computer Matching Program.

SUMMARY: Notice is hereby given that OCSE is amending one of its systems of records, the Federal Parent Locator System and Federal Tax Offset System (FPLS), DHHS/OCSE No. 09–90–0074. Information on this system was last published at 55 FR 34764, August 24, 1990. The Office of Child Support Enforcement wishes to advise the public that the FPLS will obtain additional information from: (a) Federal civilian and military personnel/payroll data maintained by the Department of Defense and the United States Postal Service; and (b) new hire information maintained for or by state child support enforcement agencies.

OCSE also wishes to advise the public that it will disclose additional data from the FPLS to state child support enforcement agencies for use in locating individuals and identifying their income sources in order to establish paternity, establish and modify orders of support and for enforcement action.

Further, OCSE is modifying its systems notice to indicate that retention and disposal procedures for records involving tax offset requests and responses differ from retention and disposal procedures for other records.

Finally, this notice also corrects a typographical error which appeared in the Notice of Computer Matching Program published at 60 FR 54692 (October 25, 1995).

DATES: Effective July 25, 1996. Interested persons are invited to submit written data, views, or arguments concerning operation of the Federal Parent Locator System and Federal Tax Offset System (FPLS), DHHS/OCSE No. 09–90–0074 as amended herein. Consideration will be given to comments received by August 26, 1996.

ADDRESSES: Send comments to Donna Bonar, Director, Division of Program Operations, Office of Child Support Enforcement, 370 L'Enfant Promenade, SW., 4th Floor East, Washington, DC 20447.

FOR FURTHER INFORMATION CONTACT: Donna Bonar, Director, Division of Program Operations, Office of Child Support Enforcement, (202) 401–9271.

SUPPLEMENTARY INFORMATION: Pursuant to section 304 of Executive Order 12953 dated February 27, 1995, OCSE will establish periodic crossmatches between its Federal Tax Offset System and personnel/payroll files maintained by the Department of Defense and the United States Postal Service (USPS). The data to be matched are noncustodial parent's name and social security number. The data which will be disclosed to OCSE as a result of these matches may include: Noncustodial parent's date of birth, home address, employer, work location, medical coverage, type of employment, annual salary, pay rate and date of death. This information on Federal personnel who are obligors will be disclosed by OCSE to State child support agencies for use in determining whether wage withholding or other enforcement actions should be initiated.

Moreover, pursuant to the President's directive of June 18, 1996 and beginning approximately August 1, 1996, the FPLS will obtain access to new hire information voluntarily submitted to the FPLS by States. The new hire information provided to the FPLS will consist of data submitted by new employees to their employers on IRS Form W–4 or other appropriate forms. OCSE will then crossmatch the names and social security numbers submitted by States to the FPLS against the new hire data. When a match occurs, the employee name, employee social security number, employee date of birth, employee address, employer name, employer address, Federal employer identification number, and date of hire may be given to State child support enforcement agencies. This information will be used to locate individuals and identify their income sources for purposes of establishing paternity, establishing and modifying orders of support, and for enforcement action.

Further, the FPLS systems notice is being amended to provide that additional data from the FPLS may be disclosed to State child support enforcement agencies for use in locating individuals and identifying their income sources in order to establish paternity, establish and modify orders of support and for enforcement action. This additional information may include: Date of birth, place of birth, mother's maiden and full names, father's full name, State case identification number, State or locality originating request, type of case, type of employment, mailing address, work location, annual salary, pay rate, quarterly wages, medical coverage, benefit amounts, recent employer's address, known alias (last name only), employer name, Federal employer identification number, date of hire, and date of death.

In addition, OCSE is modifying its systems notice to indicate that its retention and disposal procedures for records involving tax offset requests and responses are different from its retention and disposal procedures for other records in this system.

Finally, a typographical error on page 54693, section 2.d.(2), in the Notice of Computer Matching Program published at 60 FR 54692 (October 25, 1995) is being corrected to reflect that OCSE will access records from the Defense Manpower Data Center Data Base, S322.10 DMDC, rather than the Federal Creditor Agency Debt Collection Data Base, S322.11 DMDC.

Accordingly, the Federal Parent Locator System and Federal Tax Offset System (FPLS) notice originally published at 47 FR 45547 and most recently amended at 55 FR 34764 is further amended as set forth below.

CATEGORIES OF RECORDS IN THE SYSTEM:

Name of noncustodial parent or child, social security number (when available), date of birth, place of birth, mother's full and maiden names, father's full name, State case identification number, local identification number (State use only), State or locality originating request, date of origination, type of case (AFDC, non-AFDC full-service, non-AFDC locate only, parental kidnapping), employer name, employer address, Federal employer identification number, date of hire, home address, mailing address, type of employment, work location, annual salary, pay rate, quarterly wages, medical coverage, benefit amounts, type of military service (Army, Navy, Marines, Air Force, Coast Guard, not in service), retired military (yes or no), Federal employee (yes or no), recent employer's address, known alias (last name only,) average amount, offset amount, date requests sent to Federal agencies or departments (SSA, IRS, DoD, OPM, NPRC, VA, RRB, USPS, Selective Service, SESAs), dates of Federal agencies' or departments' responses, date of death.

PURPOSE(S):

Section 304 of Executive Order 12953 authorizes periodic crossmatches between OCSE's Federal Tax Offset System and personnel/payroll files maintained by the Federal agencies for the purpose of providing information to States to assist their child support enforcement efforts.

The President's directive of June 18, 1996, authorizes crossmatches, through the FPLS, between new hire reporting information and information submitted by States to the Federal Parent Locator Service and the Federal Tax Offset System.

ROUTINE USES OF RECORDS MAINTAINED IN THE SYSTEM, INCLUDING CATEGORIES OF USERS AND THE PURPOSES OF SUCH USES:

(1) Request from any State or Federal government department, agency or instrumentality which might have such information in its records any of the following data pertaining to non-custodial parents: Social security number (when available), date of birth, place of birth, mother's full and maiden names, father's full name, State case identification number, local identification number (State use only), State or locality originating request, date of origination, type of case (AFDC, non-AFDC full-service, non-AFDC locate only, parental kidnapping), employer name, employer address, Federal employer identification number, date of hire, home address, mailing address, type of employment, work location, annual salary, pay rate, quarterly wages, medical coverage, benefit amounts, type of military service (Army, Navy, Marines, Air Force, Coast Guard, not in service), retired military (yes or no), Federal employee (yes or no), recent employer's address, known alias (last name only), date of death;

(2) Provide to State agencies under agreements covered by title IV–D of the Social Security Act the following information for the purpose of locating non-custodial parents in connection with establishing or enforcing child support obligations: Social security number (when available), date of birth, place of birth, mother's full and maiden names, father's full name, employer name, employer address, Federal employer identification number, date of hire, home address, mailing address, type of employment, work location, annual salary, pay rate, quarterly wages, medical coverage, benefit amounts, recent employer's address, known alias (last name only), date of death;

(3) Provide to State agencies under agreements covered by Section 463 of the Social Security Act (42 U.S.C. 663) the following information for the purpose of locating non-custodial parents or children in connection with activities by State courts and Federal attorneys and agents charged with making or enforcing child custody determinations or conducting investigations, enforcement proceedings or prosecutions concerning the unlawful taking or restraint of children: Social security number (when available), date of birth, place of birth, mother's full and maiden names, father's full name, employer name, employer address, Federal employer identification number, date of hire, home address, mailing address, type of employment, work location, annual salary, pay rate, quarterly wages, medical coverage, benefit amounts, recent employer's address, known alias (last name only), date of death;

(4) Provide to agents and attorneys of the United States, involved in activities in States which do not have agreements under Section 463 of the Social Security Act (42 U.S.C. 663) the following information for the purpose of locating non-custodial parents in connection with activities by State courts and Federal attorneys and agents charged with making or enforcing child custody determinations or conducting investigations, enforcement proceedings or prosecutions concerning the unlawful taking or restraint of children: Social security number (when available), date of birth, place of birth, mother's full and maiden names, father's full name, employer name, employer address, Federal employer identification number, date of hire, home address, mailing address, type of employment, work location, annual salary, pay rate, quarterly wages, medical coverage, benefit amounts, recent employer's address, known alias (last name only), date of death;

RETENTION AND DISPOSAL:

Records of tax offset requests and responses are maintained for six years in an active master file for purposes of collection and adjustment. After this time, records of cases for which there was no collection are destroyed. Records of cases with a collection are stored on-line in an inactive master file.

Records of actual information provided in response to other requests are maintained only long enough to communicate the information to the State or the Federal agent or attorney requesting it. After this time, the responsive information is destroyed. However, a record of the request only which includes information provided by the State, Federal agencies contacted, and an indication of the type of information so returned is stored on a history tape and in hard copy. All history data is retained for five years and is then destroyed.

Technical Correction for Notice of Computer Matching Program

Section 2.d.(2) of OCSE's October 25, 1995 Notice of Computer Matching Program, published at 60 FR 54692, 54693, is corrected to read as follows:

* * * * *

(2) DMDC Defense Manpower Data Center Data Base, S322.10, most recently published at 61 FR 6354 (February 20, 1996).

* * * * *

Dated: July 18, 1996.

David Gray Ross,

Deputy Director, Office of Child Support Enforcement.

[FR Doc. 96–18757 Filed 7–24–96; 8:45 am]

BILLING CODE 4184–01–P

Agency Recordkeeping/Reporting Requirements Under Emergency Review by the Office of Management and Budget (OMB)

Title: Federal Parent Locator Service (FPLS).

OMB No.: New.

Description: The Office of Child Support Enforcement (OCSE) operates the Federal Parent Locator Services (FPLS), a computerized national location network which provides address and social security number information to State and local child support enforcement agencies upon request to locate parents in order to establish or enforce a child support order and to assist authorized persons in resolving parental kidnapping and child custody cases.

State and local agency requests to the FPLS can be made by tape, cartridge, electronic file transfer or by dialing-up using a personal computer. The FPLS serves as a conduit between child support enforcement offices and Federal and State agencies by conducting weekly, biweekly, or monthly matches of the collected information with various agencies and distributing the information back to the requesting State or local child support office.

Respondents: State, Local, Tribal or Federal Govt.

ANNUAL BURDEN ESTIMATES

Instrument	Number of respondents	Number of responses per respondent	Average burden hours per response	Total burden hours
Standard Forms ..... Estimated Total Annual Burden Hours: 4,800.	*200	*24	1	4,800

*The 4,800 transmittals (200×24) represents 4.2 million cases.

Explanation:

• The specific number of annual burden hours per respondent will vary depending on individual circumstances including a State's frequency in submitting requests and their node of submission.

• Burden hours for initial collection of information included in the submission are not considered as part of this request. State and local agencies maintain this information as part of their day-to-day operation of the child support enforcement program.

Additional Information: ACF is requesting that OMB grant approval for this information collection under procedures for emergency processing by August 22, 1996. A copy of this information collection, with applicable supporting documentation, may be obtained by calling the Administration for Children and Families, Reports Clearance Officer, Larry Guerrero at (202) 401–6465.

Comments and questions about the information collection described above should be directed to the Office of Information and Regulatory Affairs, Attn: OMB Desk Officer for ACF, Office of Management and Budget, Paperwork Reduction Project, 725 17th Street, N.W., Washington, D.C. 20503, (202) 395–7316.

Dated: July 17, 1996.

Larry Guerrero,

Reports Clearance Officer.

[FR Doc. 96–18710 Filed 7–24–96; 8:45 am]

BILLING CODE 4184–01–M

DEPARTMENT OF HOUSING AND URBAN DEVELOPMENT

[Docket No. FR–4099–N–03]

Office of the Assistant Secretary for Housing-Federal Housing Commission; Notice of Proposed Information Collection for Public Comment

AGENCY: Office of the Assistant Secretary for Housing, HUD.

ACTION: Notice.

SUMMARY: The proposed information collection requirement described below will be submitted to the Office of Management and Budget (OMB) for review, as required by the Paperwork Reduction Act. The Department is soliciting public comments on the subject proposal.

DATES: Comments due: September 23, 1996.

ADDRESSES: Interested persons are invited to submit comments regarding this proposal. Comments should refer to the proposal by name and/or OMB Control Number and should be sent to: Oliver Walker, Housing, Department of Housing & Urban Development, 451—7th Street, SW., Room 9116, Washington, DC 20410.

FOR FURTHER INFORMATION CONTACT: George Dipman, telephone number (202) 708–0614, Ext. 2547 (this is not a toll-free number) for copies of the proposed forms and other available documents.

SUPPLEMENTARY INFORMATION: The Department will submit the proposed information collection to OMB for review, as required by the Paperwork Reduction Act of 1995 (44 U.S.C. Chapter 35, as amended).

The Notice is soliciting comments from members of the public and affecting agencies concerning the proposed collection of information to: (1) Evaluate whether the proposed collection of information is necessary for the proper performance of the functions of the agency, including whether the information will have practical utility; (2) evaluate the accuracy of the agency's estimate of the burden of the proposed collection of information; (3) enhance the quality, utility, and clarity of the information to be collected; and (4) minimize the burden of the collection of information on those who are to respond, including through the use of appropriate automated collection techniques or other forms of information technology; e.g., permitting electronic submission of responses.

This Notice also lists the following information:

Title of Proposal: Mark to Market/Portfolio Reengineering Demonstration Program Guidelines Proposal Submission Requirements and Processing.

OMB Control Number: 2502–xxxx.

Descripton of the need for the information and proposed use: This information collection is required for the application and processing procedures for a demonstration program that is designed to restructure the financing of projects that have FHA-insured mortgages and that receive Section 8 rent assistance. The purpose of the Congressionally authorized demonstration is to test the feasibility and desirability of multifamily projects meeting their financial and other obligations with or without FHA insurance and/or Section 8 assistance. In negotiating agreements with eligible project owners, HUD must act to protect the financial interest of the Federal government, while taking into account the need for assistance of low- and very low-income tenants. HUD anticipates that, over time, it will publish additional guidance that reflects the experience derived through the execution of successful agreements with project owners.

Agency Form Numbers: None.

Members of Affected Public: Owners of Projects that have FHA-insured Mortgages and receive Section 8 Rent Assistance.

An estimation of the total numbers of hours needed to prepare the information collection is 160,000, the number of respondents is 200, frequency of response is 1, and the hours of response is 80.

Status of the Proposed Information Collection: Extension.

Authority: Section 3506 of the Paperwork Reduction Act of 1995, 44 U.S.C., Chapter 35, as amended.

Dated: July 18, 1996.

Nicolas P. Retsinas,

Assistant Secretary for Housing-Federal Housing Commissioner.

[FR Doc. 96–18853 Filed 7–24–96; 8:45 am]

BILLING CODE 4210–27–M

[Docket No. FR–4086–N–13]

Office of the Assistant Secretary for Public and Indian Housing; Notice of Proposed Information Collection for Public Comment

AGENCY: Office of the Assistant Secretary for Public and Indian Housing, HUD.

ACTION: Notice.

SUMMARY: The proposed information collection requirement described below will be submitted to the Office of Management and Budget (OMB) for review, as required by the Paperwork Reduction Act. The Department is soliciting public comments on the subject proposal.

DATES: Comments due: September 23, 1996.

ADDRESSES: Interested persons are invited to submit comments regarding this proposal. Comments should refer to the proposal by name and/or OMB Control Number and should be sent to: Mildred M. Hamman, Reports Liaison Officer, Public and Indian Housing, Department of Housing and Urban Development, 451–7th Street, SW, Room 4238, Washington, D.C. 20410–5000.

FOR FURTHER INFORMATION CONTACT: Mildred M. Hamman, (202)–708–0846, for copies of the proposed forms and other available documents. (This is not a toll-free number).

SUPPLEMENTARY INFORMATION: The Department will submit the proposed information collection to OMB for review, as required by the Paperwork Reduction Act of 1995 (44 U.S.C. Chapter 35, as amended).

This Notice is soliciting comments from members of the public and affected agencies concerning the proposed collection of information to: (1) evaluate whether the proposed collection of information is necessary for the proper performance of the functions of the agency, including whether the information will have practical utility; (2) evaluate the accuracy of the agency's estimate of the burden of the proposed collection of information; (3) enhance the qualify, utility, and clarity of the information to be collected; and (4) minimize the burden of the collection of information on those who are to respond, including through the use of appropriate automated collection techniques or other forms of information technology; e.g., permitting electronic submission of responses.

This Notice also lists the following information:

Title of Proposal: Public and Indian Housing—General Conditions for Construction Contract—Form HUD 5370.

OMB Control Number: 2577–0094.

This form is required for construction contracts awarded by Public Housing Agencies and Indian Housing Authorities, refered to hereafter as Housing Authorities (HAs). The form provides requirements for performance and compliance with the construction contract document by contractors and subcontractors and the obligations of HAs in project construction under the conventional bid method and modernization. The General Conditions for Construction Contracts are bound into the Project Specifications and become part of the Contract Documents. If the form were not used by HAs in solicitations, HAs would be unable to enforce their contracts.

The form includes those clauses required by OMB's Common Rule on grantee procurement, implemented by HUD at 24 CFR 85.36, HUD program regulations on grantee procurement; those requirements set forth in Section 3 of the Housing and Urban Development Act of 1968, as amended (12 U.S.C. 1701u, Section 3, for the employment, training, and contracting opportunities for low income persons), implemented by HUD at 24 CFR 135; and HUD Handbooks implementing those regulations.

Members of affected public: PHAs; IHAs.

Estimation of the total number of hours needed to prepare the information collection including number of responses, frequency of response, and hours of response: on an annual basis, 3,895 responses, 1 response per construction contract, 3,895 total responses, 3,898 total burden hours. Status of the proposed information collection: Revision of currently approved collection, with changes to (1) include the requirements set forth in Section 3 of the Housing and Urban Development Act of 1968, as amended (12 U.S.C. 1701u, Section 3) implemented by HUD at 24 CFR 135 and (2) correct three typographical errors occurring in the previous edition of the form.

Authority: Section 3506 of the Paperwork Reduction Act of 1995, 44 U.S.C. Chapter 35, as amended.

Dated: July 17, 1996.

Michael B. Janis,

General Deputy.

BILLING CODE 4210–33–M

U.S. Department of Housing and Urban Development
Office of Public and Indian Housing

OMB No. 2577-0094 (exp. 7/31/96)

General Conditions of the **Contract for Construction**

Public and Indian Housing Programs

DRAFT

DRAFT

Previous edition is obsolete

form **HUD-5370** (6/17/96)
ref Handbooks 7417.1 & 7485.1

This form HUD-5370 includes those clauses required by OMB's common rule on grantee procurement, implemented at HUD in 24 CFR 85.36 and those requirements set forth in Section 3 of the Housing and Urban development Act of 1968, as amended, and implemented by HUD at 24 CFR 135 and by its amendment by the Housing and Community Development Act 1992, implemented by HUD in the Interim Rule published June 30, 1994. The form is required for construction contracts awarded by Public Housing Agencies (PHAs) and Indian Housing Authorities (IHAs).

The form is used by Housing Authorities in solicitations to provide necessary contract clauses. If the form were not used, HAs would be unable to enforce their contracts.

Public reporting burden for this collection of information is estimated to average 1.0 hours per response, including the time for reviewing instructions, searching existing data sources, gathering and maintaining the data needed, and completing and reviewing the collection of information. Send comments regarding this burden estimate or any other aspect of this collection of information, including suggestions for reducing this burden, to the Reports Management Officer, Paperwork Reduction Project (2577-0094), Office of Information Technology, U.S. Department of Housing and Urban Development, Washington, D.C. 20410-3600.

Do not send this form to the above address.

Responses to the collection of information; are required to obtain a benefit or to retain a benefit.

The information requested does not lend itself to confidentiality.

HUD may not conduct or sponsor, and a person is not required to respond to a collection of information unless it displays a currently valid OMB number

form **HUD-5370** (6/17/96)
ref Handbooks 7417.1 & 7485.1

Table of Contents

Clause		Page
	Conduct of Work	
1.	Definitions	1
2.	Contractor's Responsibility for Work	2
3.	Architect's Duties, Responsibilities, and Authority	2
4.	Other Contracts	2
	Construction Requirements	
5.	Preconstruction Conference and Notice to Proceed	3
6.	Construction Progress Schedule	3
7.	Site Investigation and Conditions Affecting the Work	3
8.	Differing Site Conditions	3
9.	Specifications and Drawings for Construction	4
10.	As-Built Drawings	4
11.	Material and Workmanship	5
12.	Permits and Codes	5
13.	Health, Safety, and Accident Prevention	5
14.	Temporary Heating	6
15.	Availability and Use of Utility Services	6
16.	Protection of Existing Vegetation, Structures, Equipment, Utilities, and Improvements	6
17.	Temporary Buildings and Transportation of Materials	6
18.	Clean Air and Water	7
19.	Energy Efficiency	7
20.	Inspection and Acceptance of Construction	7
21.	Use and Possession Prior to Completion	8
22.	Warranty of Title	8
23.	Warranty of Construction	8
24.	Prohibition Against Liens	9
	Administrative Requirements	
25.	Contract Period	9
26.	Order of Precedence	9
27.	Payments	9
28.	Contract Modifications	10
29.	Changes	10
30.	Suspension of Work	11
31.	Disputes	11
32.	Default	11
33.	Liquidated Damages	12
34.	Termination for Convenience	12
35.	Assignment of Contract	12
36.	Insurance	12
37.	Subcontracts	13
38.	Subcontracting with Small and Minority Firms, Women's Business Enterprise, and Labor Surplus Area Firms	13
39.	Equal Employment Opportunity	13
40.	Employment, Training, and Contracting Opportunities for Low-Income Persons, Section 3 of the Housing and Urban Development Act of 1968.	14
41.	Indian Preference	14
42.	Interest of Members of Congress	15
43.	Interest of Members, Officers, or Employees and Former Members, Officers, or Employees	15
44.	Limitations on Payments made to Influence Certain Federal Financial Transactions	15
45.	Royalties and Patents	15
46.	Examination and Retention of Contractor's Records	15
47.	Labor Standards - Davis-Bacon and Related Acts	15
48.	Labor Standards - Non-Routine Maintenance	19
49.	Non-Federal Prevailing Wage Rates	20

DRAFT

General Conditions of the Contract for Construction

Public and Indian Housing Programs

Conduct of Work

1. Definitions

(a) **"Architect"** means the person or other entity engaged by the PHA/IHA to perform architectural, engineering, design, and other services related to the work as provided for in the contract. When a PHA/IHA uses an engineer to act in this capacity, the terms "architect" and "engineer" shall be synonymous. The Architect shall serve as a technical representative of the Contracting Officer. The Architect's authority is as set forth elsewhere in this contract.

(b) **"Contract"** means the contract entered into between the PHA/IHA and the Contractor. It includes the forms of Bid, the Bid Bond, the Performance and Payment Bond or Bonds or other assurance of completion, the Certifications, Representations, and Other Statements of Bidders (form HUD-5369-A), these General Conditions of the Contract for Construction (form HUD-5370), the applicable wage rate determinations from either the U.S. Department of Labor or HUD, any special conditions included elsewhere in the contract, the specifications, and drawings. It includes all formal changes to any of those documents by addendum, change order, or other modification.

(c) **"Contracting Officer"** means the person delegated the authority by the PHA/IHA to enter into, administer, and/or terminate this contract and designated as such in writing to the Contractor. The term includes any successor Contracting Officer and any duly authorized representative of the Contracting Officer also designated in writing. The Contracting Officer shall be deemed the authorized agent of the PHA/IHA in all dealings with the Contractor.

(d) **"Contractor"** means the person or other entity entering into the contract with the PHA/IHA to perform all of the work required under the contract.

(e) **"Drawings"** means the drawings enumerated in the schedule of drawings contained in the Specifications and as described in the contract clause entitled **Specifications and Drawings for Construction** herein.

(f) **"HUD"** means the United States of America acting through the Department of Housing and Urban Development including the Secretary, or any other person designated to act on its behalf.

HUD has agreed, subject to the provisions of an Annual Contributions Contract (ACC), to provide financial assistance to the PHA/IHA, which includes assistance in financing the work to be performed under this contract. As defined elsewhere in these General Conditions or the contract documents, the determination of HUD may be required to authorize changes in the work or for release of funds to the PHA/IHA for payment to the Contractor. Notwithstanding HUD's role, nothing in this contract shall be construed to create any contractual relationship between the Contractor and HUD.

(g) **"Project"** means the entire project, whether construction or rehabilitation, the work for which is provided for in whole or in part under this contract.

(h) **"PHA/IHA"** means the Public Housing Agency or Indian Housing Authority organized under applicable state or tribal law which is a party to this contract.

(i) **"Specifications"** means the written description of the technical requirements for construction and includes the criteria and tests for determining whether the requirements are met.

(l) **"Work"** means materials, workmanship, and manufacture and fabrication of components.

2. Contractor's Responsibility for Work

(a) The Contractor shall furnish all necessary labor, materials, tools, equipment, and transportation necessary for performance of the work. The Contractor shall also furnish all necessary water, heat, light, and power not made available to the Contractor by the PHA/IHA pursuant to the clause entitled **Availability and Use of Utility Services** herein.

(b) The Contractor shall perform on the site, and with its own organization, work equivalent to at least [ ] (12 percent unless otherwise indicated) of the total amount of work to be performed under the order. This percentage may be reduced by a supplemental agreement to this order if, during performing the work, the Contractor requests a reduction and the Contracting Officer determines that the reduction would be to the advantage of the PHA/IHA.

(c) At all times during performance of this contract and until the work is completed and accepted, the Contractor shall directly superintend the work or assign and have on the work site a competent superintendent who is satisfactory to the Contracting Officer and has authority to act for the Contractor.

(d) The Contractor shall be responsible for all damages to persons or property that occur as a result of the Contractor's fault or negligence, and shall take proper safety and health precautions to protect the work, the workers, the public, and the property of others. The Contractor shall hold and save the PHA/IHA, its officers and agents, free and harmless from liability of any nature occasioned by the Contractor's performance. The Contractor shall also be responsible for all materials delivered and work performed until completion and acceptance of the entire work, except for any completed unit of work which may have been accepted under the contract.

(e) The Contractor shall lay out the work from base lines and bench marks indicated on the drawings and be responsible for all lines, levels, and measurements of all work executed under the contract. The Contractor shall verify the figures before laying out the work and will be held responsible for any error resulting from its failure to do so.

(f) The Contractor shall confine all operations (including storage of materials) on PHA/IHA premises to areas authorized or approved by the Contracting Officer.

(g) The Contractor shall at all times keep the work area, including storage areas, free from accumulations of waste materials. After completing the work and before final inspection, the Contractor shall (1) remove from the premises all scaffolding, equipment, tools, and materials (including rejected materials) that are not the property of the PHA/IHA and all rubbish caused by its work; (2) leave the work area in a clean, neat, and orderly condition satisfactory to the Contracting Officer; (3) perform all specified tests; and, (4) deliver the installation in complete and operating condition.

(h) The Contractor's responsibility will terminate when all work has been completed, the final inspection made, and the work accepted by the Contracting Officer. The Contractor will then be released from further obligation except as required by the warranties specified elsewhere in the contract.

3. Architect's Duties, Responsibilities, and Authority

(a) The Architect for this contract, and any successor, shall be designated in writing by the Contracting Officer.

(b) The Architect shall serve as the Contracting Officer's technical representative with respect to architectural, engineering, and design matters related to the work performed under the contract. The Architect may provide direction on contract performance. Such direction shall be within the scope of the contract and may not be of a nature which: (1) institutes additional work outside the scope of the contract; (2) constitutes a change as defined in the **Changes** clause herein; (3) causes an increase or decrease in the cost of the contract; (4) alters the Construction Progress Schedule; or (5) changes any of the other express terms or conditions of the contract.

(c) The Architect's duties and responsibilities may include but shall not be limited to:

(1) Making periodic visits to the work site, and on the basis of his/her on-site inspections, issuing written reports to the PHA/IHA which shall include all observed deficiencies. The Architect shall file a copy of the report with the Contractor's designated representative at the site;

(2) Making modifications in drawings and technical specifications and assisting the Contracting Officer in the preparation of change orders and other contract modifications for issuance by the Contracting Officer;

(3) Reviewing and making recommendations with respect to -(i) the Contractor's construction progress schedules; (ii) the Contractor's shop and detailed drawings; (iii) the machinery, mechanical and other equipment and materials or other articles proposed for use by the Contractor; and, (iv) the Contractor's price breakdown and progress payment estimates; and,

(4) Assisting in inspections, signing Certificates of Completion, and making recommendations with respect to acceptance of work completed under the contract.

4. Other Contracts

The PHA/IHA may undertake or award other contracts for additional work at or near the site of the work under this contract. The Contractor shall fully cooperate with the other contractors and with

PHA/IHA employees and shall carefully adapt scheduling and performing the work under this contract to accommodate the additional work, heeding any direction that may be provided by the Contracting Officer. The Contractor shall not commit or permit any act that will interfere with the performance of work by any other contractor or by PHA/IHA employees.

Construction Requirements

5. Preconstruction Conference and Notice to Proceed

(a) Within ten calendar days of contract execution, and prior to the commencement of work, the Contractor shall attend a preconstruction conference with representatives of the PHA/IHA, its Architect, and other interested parties convened by the PHA/IHA. The conference will serve to acquaint the participants with the general plan of the construction operation and all other requirements of the contract. The PHA/IHA will provide the Contractor with the date, time, and place of the conference.

(b) The contractor shall begin work upon receipt of a written Notice to Proceed from the Contracting Officer or designee. The Contractor shall not begin work prior to receiving such notice.

6. Construction Progress Schedule

(a) The Contractor shall, within five days after the work commences on the contract or another period of time determined by the Contracting Officer, prepare and submit to the Contracting Officer for approval three copies of a practicable schedule showing the order in which the Contractor proposes to perform the work, and the dates on which the Contractor contemplates starting and completing the several salient features of the work (including acquiring labor, materials, and equipment). The schedule shall be in the form of a progress chart of suitable scale to indicate appropriately the percentage of work scheduled for completion by any given date during the period. If the Contractor fails to submit a schedule within the time prescribed, the Contracting Officer may withhold approval of progress payments or take other remedies under the contract until the Contractor submits the required schedule.

(b) The Contractor shall enter the actual progress on the chart as required by the Contracting Officer, and immediately deliver three copies of the annotated schedule to the Contracting Officer. If the Contracting Officer determines, upon the basis of inspection conducted pursuant to the clause entitled ***Inspection and Acceptance of Construction***, herein that the Contractor is not meeting the approved schedule, the Contractor shall take steps necessary to improve its progress, including those that may be required by the Contracting Officer, without additional cost to the PHA/IHA. In this circumstance, the Contracting Officer may require the Contractor to increase the number of shifts, overtime operations, days of work, and/or the amount of construction plant, and to submit for approval any supplementary schedule or schedules in chart form as the Contracting Officer deems necessary to demonstrate how the approved rate of progress will be regained.

(c) Failure of the Contractor to comply with the requirements of the Contracting Officer under this clause shall be grounds for a determination by the Contracting Officer that the Contractor is not prosecuting the work with sufficient diligence to ensure completion within the time specified in the Contract. Upon making this determination, the Contracting Officer may terminate the Contractor's right to proceed with the work, or any separable part of it, in accordance with the **Default** clause of this contract.

7. Site Investigation and Conditions Affecting the Work

(a) The Contractor acknowledges that it has taken steps reasonably necessary to ascertain the nature and location of the work, and that it has investigated and satisfied itself as to the general and local conditions which can affect the work or its cost, including but not limited to, (1) conditions bearing upon transportation, disposal, handling, and storage of materials; (2) the availability of labor, water, electric power, and roads; (3) uncertainties of weather, river stages, tides, or similar physical conditions at the site; (4) the conformation and conditions of the ground; and (5) the character of equipment and facilities needed preliminary to and during work performance. The Contractor also acknowledges that it has satisfied itself as to the character, quality, and quantity of surface and subsurface materials or obstacles to be encountered insofar as this information is reasonably ascertainable from an inspection of the site, including all exploratory work done by the PHA/IHA, as well as from the drawings and specifications made a part of this contract. Any failure of the Contractor to take the actions described and acknowledged in this paragraph will not relieve the Contractor from responsibility for estimating properly the difficulty and cost of successfully performing the work, or for proceeding to successfully perform the work without additional expense to the PHA/IHA.

(b) The PHA/IHA assumes no responsibility for any conclusions or interpretations made by the Contractor based on the information made available by the PHA/IHA. Nor does the PHA/IHA assume responsibility for any understanding reached or representation made concerning conditions which can affect the work by any of its officers or agents before the execution of this contract, unless that understanding or representation is expressly stated in this contract.

8. Differing Site Conditions

(a) The Contractor shall promptly, and before the conditions are disturbed, give a written notice to the Contracting Officer of (1) subsurface or latent physical conditions at the site which differ materially from those indicated in this contract, or (2) unknown physical conditions at the site(s), of an unusual nature, which differ materially from those ordinarily encountered and generally recognized as inhering in work of the character provided for in the contract.

(b) The Contracting Officer shall investigate the site conditions promptly after receiving the notice. Work shall not proceed at the affected site, except at the Contractor's risk, until the Contracting Officer has provided written instructions to the Contractor. If the conditions do materially so differ and cause an increase or decrease in the Contractor's cost of, or the time required for, performing any part of the work under this contract, whether or not changed as a result of the conditions, the Contractor shall file a claim in writing to the PHA/IHA within ten days after receipt of such instructions and, in any event, before proceeding with the work. An equitable adjustment in the contract price, the delivery schedule, or both shall be made under

this clause and the contract modified in writing accordingly.

(c) No request by the Contractor for an equitable adjustment to the contract under this clause shall be allowed, unless the Contractor has given the written notice required; provided, that the time prescribed in (a) above for giving written notice may be extended by the Contracting Officer.

(d) No request by the Contractor for an equitable adjustment to the contract for differing site conditions shall be allowed if made after final payment under this contract.

9. Specifications and Drawings for Construction

(a) The Contractor shall keep on the work site a copy of the drawings and specifications and shall at all times give the Contracting Officer access thereto. Anything mentioned in the specifications and not shown on the drawings, or shown on the drawings and not mentioned in the specifications, shall be of like effect as if shown or mentioned in both. In case of difference between drawings and specifications, the specifications shall govern. In case of discrepancy in the figures, in the drawings, or in the specifications, the matter shall be promptly submitted to the Contracting Officer, who shall promptly make a determination in writing. Any adjustment by the Contractor without such a determination shall be at its own risk and expense. The Contracting Officer shall furnish from time to time such detailed drawings and other information as considered necessary, unless otherwise provided.

(b) Wherever in the specifications or upon the drawings the words "directed", "required", "ordered", "designated", "prescribed", or words of like import are used, it shall be understood that the "direction", "requirement", "order", "designation", or "prescription", of the Contracting Officer is intended and similarly the words "approved", "acceptable", "satisfactory", or words of like import shall mean "approved by", or "acceptable to", or "satisfactory to" the Contracting Officer, unless otherwise expressly stated.

(c) Where "as shown", "as indicated", "as detailed", or words of similar import are used, it shall be understood that the reference is made to the drawings accompanying this contract unless stated otherwise. The word "provided" as used herein shall be understood to mean "provide complete in place", that is "furnished and installed".

(d) "Shop drawings" means drawings, submitted to the PHA/IHA by the Contractor, subcontractor, or any lower tier subcontractor, showing in detail (1) the proposed fabrication and assembly of structural elements and (2) the installation (i.e., form, fit, and attachment details) of materials of equipment. It includes drawings, diagrams, layouts, schematics, descriptive literature, illustrations, schedules, performance and test data, and similar materials furnished by the Contractor to explain in detail specific portions of the work required by the contract. The PHA/IHA may duplicate, use, and disclose in any manner and for any purpose shop drawings delivered under this contract.

(e) If this contract requires shop drawings, the Contractor shall coordinate all such drawings, and review them for accuracy, completeness, and compliance with other contract requirements and shall indicate its approval thereon as evidence of such coordination and review. Shop drawings submitted to the Contracting Officer without evidence of the Contractor's approval may be returned for resubmission. The Contracting Officer will indicate an approval or disapproval of the shop drawings and if not approved as submitted shall indicate the PHA/IHA's reasons therefor. Any work done before such approval shall be at the Contractor's risk. Approval by the Contracting Officer shall not relieve the Contractor from responsibility for any errors or omissions in such drawings, nor from responsibility for complying with the requirements of this contract, except with respect to variations described and approved in accordance with (f) below.

(f) If shop drawings show variations from the contract requirements, the Contractor shall describe such variations in writing, separate from the drawings, at the time of submission. If the Architect approves any such variation and the Contracting Officer concurs, the Contracting Officer shall issue an appropriate modification to the contract, except that, if the variation is minor or does not involve a change in price or in time of performance, a modification need not be issued.

(g) It shall be the responsibility of the Contractor to make timely requests of the PHA/IHA for such large scale and full size drawings, color schemes, and other additional information, not already in his possession, which shall be required in the planning and production of the work. Such requests may be submitted as the need arises, but each such request shall be filed in ample time to permit appropriate action to be taken by all parties involved so as to avoid delay.

(h) The Contractor shall submit to the Contracting Officer for approval four copies (unless otherwise indicated) of all shop drawings as called for under the various headings of these specifications. Three sets (unless otherwise indicated) of all shop drawings, will be retained by the PHA/IHA and one set will be returned to the Contractor. As required by the Contracting Officer, the Contractor, upon completing the work under this contract, shall furnish a complete set of all shop drawings as finally approved. These drawings shall show all changes and revisions made up to the time the work is completed and accepted.

(i) This clause shall be included in all subcontracts at any tier. It shall be the responsibility of the Contractor to ensure that all shop drawings prepared by subcontractors are submitted to the Contracting Officer.

10. As-Built Drawings

(a) "As-built drawings," as used in this clause, means drawings submitted by the Contractor or subcontractor at any tier to show the construction of a particular structure or work as actually completed under the contract. "As-built drawings" shall be synonymous with "Record drawings."

(b) As required by the Contracting Officer, the Contractor shall provide the Contracting Officer accurate information to be used in the preparation of permanent as-built drawings. For this purpose, the Contractor shall record on one set of contract drawings all changes from the installations originally indicated, and record final locations of underground lines by depth from finish grade and by accurate horizontal offset distances to permanent surface improvements such as buildings, curbs, or edges of walks.

(c) This clause shall be included in all subcontracts at any tier. It shall be the responsibility of the Contractor to ensure that all as-built drawings prepared by subcontractors are submitted to the Contracting Officer.

11. Material and Workmanship

(a) All equipment, material, and articles furnished under this contract shall be new and of the most suitable grade for the purpose intended, unless otherwise specifically provided in this contract. References in the contract to equipment, material, articles, or patented processes by trade name, make, or catalog number, shall be regarded as establishing a standard of quality and shall not be construed as limiting competition. The Contractor may, at its option, use any equipment, material, article, or process that, in the judgment of, and as approved by the Contracting Officer, is equal to that named in the specifications, unless otherwise specifically provided in this contract.

(b) Approval of equipment and materials.

(1) The Contractor shall obtain the Contracting Officer's approval of the machinery and mechanical and other equipment to be incorporated into the work. When requesting approval, the Contractor shall furnish to the Contracting Officer the name of the manufacturer, the model number, and other information concerning the performance, capacity, nature, and rating of the machinery and mechanical and other equipment. When required by this contract or by the Contracting Officer, the Contractor shall also obtain the Contracting Officer's approval of the material or articles which the Contractor contemplates incorporating into the work. When requesting approval, the Contractor shall provide full information concerning the material or articles. Machinery, equipment, material, and articles that do not have the required approval shall be installed or used at the risk of subsequent rejection.

(2) When required by the specifications or the Contracting Officer, the Contractor shall submit appropriately marked samples (and certificates related to them) for approval at the Contractor's expense, with all shipping charges prepaid. The Contractor shall label, or otherwise properly mark on the container, the material or product represented, its place of origin, the name of the producer, the Contractor's name, and the identification of the construction project for which the material or product is intended to be used.

(3) Certificates shall be submitted in triplicate, describing each sample submitted for approval and certifying that the material, equipment or accessory complies with contract requirements. The certificates shall include the name and brand of the product, name of manufacturer, and the location where produced.

(4) Approval of a sample shall not constitute a waiver of the PHA/IHA right to demand full compliance with contract requirements. Materials, equipment and accessories may be rejected for cause even though samples have been approved.

(5) Wherever materials are required to comply with recognized standards or specifications, such specifications shall be accepted as establishing the technical qualities and testing methods, but shall not govern the number of tests required to be made nor modify other contract requirements. The Contracting Officer may require laboratory test reports on items submitted for approval or may approve materials on the basis of data submitted in certificates with samples. Check tests will be made on materials delivered for use only as frequently as the Contracting Officer determines necessary to insure compliance of materials with the specifications. The Contractor will assume all costs of re-testing materials which fail to meet contract requirements and/or testing materials offered in substitution for those found deficient.

(6) After approval, samples will be kept in the Project office until completion of work. They may be built into the work after a substantial quantity of the materials they represent has been built in and accepted.

(c) Prohibition against use of lead-based paint. The Contractor shall comply with the prohibition against the use of lead-based paint contained in the Lead-Based Paint Poisoning Prevention Act (42 U.S.C. 4821-4846) as implemented by 24 CFR Part 35.

12. Permits and Codes

(a) The Contractor shall give all notices and comply with all applicable laws, ordinances, codes, rules and regulations. Notwithstanding the requirement of the Contractor to comply with the drawings and specifications in the contract, all work installed shall comply with all applicable codes and regulations as amended by any waivers. Before installing the work, the Contractor shall examine the drawings and the specifications for compliance with applicable codes and regulations bearing on the work and shall immediately report any discrepancy it may discover to the Contracting Officer. Where the requirements of the drawings and specifications fail to comply with the applicable code or regulation, the Contracting Officer shall modify the contract by change order pursuant to the clause entitled **Changes** herein to conform to the code or regulation.

(b) The Contractor shall secure and pay for all permits, fees, and licenses necessary for the proper execution and completion of the work. Where the PHA/IHA can arrange for the issuance of all or part of these permits, fees and licenses, without cost to the Contractor, the contract amount shall be reduced accordingly.

13. Health, Safety, and Accident Prevention

(a) In performing this contract, the Contractor shall:

(1) Ensure that no laborer or mechanic shall be required to work in surroundings or under working conditions which are unsanitary, hazardous, or dangerous to his/her health and/or safety as determined under construction safety and health standards promulgated by the Secretary of Labor by regulation;

(2) Protect the lives, health, and safety of other persons;

(3) Prevent damage to property, materials, supplies, and equipment; and,

(4) Avoid work interruptions.

(b) For these purposes, the Contractor shall:

(1) Comply with regulations and standards issued by the Secretary of Labor at 29 CFR Part 1926. Failure to comply may result in imposition of sanctions pursuant to the Contract Work Hours and Safety Standards Act (Public Law 91-54, 83 Stat. 96), 40 U.S.C. 327 et seq.; and,

(2) Include the terms of this clause in every subcontract so that such terms will be binding on each subcontractor.

(c) The Contractor shall maintain an accurate record of exposure data on all accidents incident to work performed under this contract resulting in death, traumatic injury, occupational disease, or damage to property, materials, supplies, or equipment, and shall report this data in the manner prescribed by 29 CFR Part 1904.

(d) The Contracting Officer shall notify the Contractor of any noncompliance with these requirements and of the corrective action required. This notice, when delivered to the Contractor or the Contractor's representative at the site of the work, shall be deemed sufficient notice of the noncompliance and corrective action required. After receiving the notice, the Contractor shall immediately take corrective action. If the Contractor fails or refuses to take corrective action promptly, the Contracting Officer may issue an order stopping all or part of the work until satisfactory corrective action has been taken. The Contractor shall not base any claim or request for equitable adjustment for additional time or money on any stop order issued under these circumstances.

(e) The Contractor shall be responsible for its subcontractors' compliance with the provisions of this clause. The Contractor shall take such action with respect to any subcontract as the PHA/IHA, the Secretary of Housing and Urban Development, or the Secretary of Labor shall direct as a means of enforcing such provisions.

14. Temporary Heating

The Contractor shall provide and pay for temporary heating, covering, and enclosures necessary to properly protect all work and materials against damage by dampness and cold, to dry out the work, and to facilitate the completion of the work. Any permanent heating equipment used shall be turned over to the PHA/IHA in the condition and at the time required by the specifications.

15. Availability and Use of Utility Services

(a) The PHA/IHA shall make all reasonably required amounts of utilities available to the Contractor from existing outlets and supplies, as specified in the contract. Unless otherwise provided in the contract, the amount of each utility service consumed shall be charged to or paid for by the Contractor at prevailing rates charged to the PHA/IHA or, where the utility is produced by the PHA/IHA, at reasonable rates determined by the Contracting Officer. The Contractor shall carefully conserve any utilities furnished without charge.

(b) The Contractor, at its expense and in a manner satisfactory to the Contracting Officer, shall install and maintain all necessary temporary connections and distribution lines, and all meters required to measure the amount of each utility used for the purpose of determining charges. Before final acceptance of the work by the PHA/IHA, the Contractor shall remove all the temporary connections, distribution lines, meters, and associated paraphernalia.

16. Protection of Existing Vegetation, Structures, Equipment, Utilities, and Improvements

(a) The Contractor shall preserve and protect all structures, equipment, and vegetation (such as trees, shrubs, and grass) on or adjacent to the work site, which are not to be removed under this contract, and which do not unreasonably interfere with the work required under this contract.

(b) The Contractor shall only remove trees when specifically authorized to do so, and shall avoid damaging vegetation that will remain in place. If any limbs or branches of trees are broken during performance of this contract, or by the careless operation of equipment, or by workmen, the Contractor shall trim those limbs or branches with a clean cut and paint the cut with a tree-pruning compound as directed by the Contracting Officer.

(c) The Contractor shall protect from damage all existing improvements and utilities (1) at or near the work site and (2) on adjacent property of a third party, the locations of which are made known to or should be known by the Contractor. Prior to disturbing the ground at the construction site, the Contractor shall ensure that all underground utility lines are clearly marked.

(d) The Contractor shall shore up, brace, underpin, secure, and protect as necessary all foundations and other parts of existing structures adjacent to, adjoining, and in the vicinity of the site, which may be affected by the excavations or other operations connected with the construction of the project.

(e) Any equipment temporarily removed as a result of work under this contract shall be protected, cleaned, and replaced in the same condition as at the time of award of this contract.

(f) New work which connects to existing work shall correspond in all respects with that to which it connects and/or be similar to existing work unless otherwise required by the specifications.

(g) No structural members shall be altered or in any way weakened without the written authorization of the Contracting Officer, unless such work is clearly specified in the plans or specifications.

(h) If the removal of the existing work exposes discolored or unfinished surfaces, or work out of alignment, such surfaces shall be refinished, or the material replaced as necessary to make the continuous work uniform and harmonious. This, however, shall not be construed to require the refinishing or reconstruction of dissimilar finishes previously exposed, or finished surfaces in good condition, but in different planes or on different levels when brought together by the removal of intervening work, unless such refinishing or reconstruction is specified in the plans or specifications.

(i) The Contractor shall give all required notices to any adjoining or adjacent property owner or other party before the commencement of any work.

(j) The Contractor shall indemnify and save harmless the PHA/IHA from any damages on account of settlement or the loss of lateral support of adjoining property, any damages from changes in topography affecting drainage, and from all loss or expense and all damages for which the PHA/IHA may become liable in consequence of such injury or damage to adjoining and adjacent structures and their premises.

(k) The Contractor shall repair any damage to vegetation, structures, equipment, utilities, or improvements, including those that are the property of a third party, resulting from failure to comply with the requirements of this contract or failure to exercise reasonable care in performing the work. If the Contractor fails or refuses to repair the damage promptly, the Contracting Officer may have the necessary work performed and charge the cost to the Contractor.

17. Temporary Buildings and Transportation of Materials

(a) Temporary buildings (e.g., storage sheds, shops, offices, sanitary facilities) and utilities may be erected by the Contractor only with the approval of the Contracting Officer and shall be built with labor and materials furnished by the Contractor without expense to the PHA/IHA. The temporary buildings and utilities shall remain the property of the Contractor and shall be removed

by the Contractor at its expense upon completion of the work. With the written consent of the Contracting Officer, the buildings and utilities may be abandoned and need not be removed.

(b) The Contractor shall, as directed by the Contracting Officer, use only established roadways, or use temporary roadways constructed by the Contractor when and as authorized by the Contracting Officer. When materials are transported in prosecuting the work, vehicles shall not be loaded beyond the loading capacity recommended by the manufacturer of the vehicle or prescribed by any federal, state, or local law or regulation. When it is necessary to cross curbs or sidewalks, the Contractor shall protect them from damage. The Contractor shall repair or pay for the repair of any damaged curbs, sidewalks, or roads.

18. Clean Air and Water Applicable to Contracts in Excess of $100,000

(a) Definition. "Facility" means any building, plant, installation, structure, mine, vessel or other floating craft, location, or site of operations, owned, leased, or supervised by the Contractor or any subcontractor, used in the performance of the contract or any subcontract. When a location or site of operations includes more than one building, plant, installation, or structure, the entire location or site shall be deemed a facility except when the Administrator, or a designee, of the Environmental Protection Agency (EPA) determines that independent facilities are collocated in one geographical area.

(b) In compliance with regulations issued by the United States Environmental Protection Agency (EPA), 40 CFR Part 15, pursuant to the Clean Air Act, as amended ("Air Act"), 42 U.S.C. 7401, et seq., the Federal Water Pollution Control Act, as amended ("Water Act"), 33 U.S.C. 1251, et seq., and Executive Order 11738, the Contractor agrees to —

(1) Not utilize any facility in the performance of this contract or any subcontract which is listed on the EPA List of Violating Facilities pursuant to Part 15 of the regulations for the duration of time that the facility remains on the list;

(2) Promptly notify the Contracting Officer if a facility the Contractor intends to use in the performance of this contract is on the EPA List of Violating Facilities or the Contractor knows that it has been recommended to be placed on the List;

(3) Comply with all requirements of the Air Act and the Water Act, including the requirements of Section 114 of the Air Act and Section 308 of the Water Act, and all applicable clean air and clean water standards; and,

(4) Include or cause to be included the provisions of this clause in every subcontract, and take such action as HUD may direct as a means of enforcing such provisions.

19. Energy Efficiency

The Contractor shall comply with all standards and policies relating to energy efficiency which are contained in the energy conservation plan issued in compliance with the Energy Policy and Conservation Act (Pub.L. 94-163) for the State in which the work under the contract is performed.

20. Inspection and Acceptance of Construction

(a) Definitions. As used in this clause -

(1) **"Acceptance"** means the act of an authorized representative of the PHA/IHA by which the PHA/IHA approves and assumes ownership of the work performed under this contract. Acceptance may be partial or complete.

(2) **"Inspection"** means examining and testing the work performed under the contract (including, when appropriate, raw materials, equipment, components, and intermediate assemblies) to determine whether it conforms to contract requirements.

(3) **"Testing"** means that element of inspection that determines the properties or elements, including functional operation of materials, equipment, or their components, by the application of established scientific principles and procedures.

(b) The Contractor shall maintain an adequate inspection system and perform such inspections as will ensure that the work performed under the contract conforms to contract requirements. All work is subject to PHA/IHA inspection and test at all places and at all reasonable times before acceptance to ensure strict compliance with the terms of the contract.

(c) PHA/IHA inspections and tests are for the sole benefit of the PHA/IHA and do not: (1) relieve the Contractor of responsibility for providing adequate quality control measures; (2) relieve the Contractor of responsibility for loss or damage of the material before acceptance; (3) constitute or imply acceptance; or, (4) affect the continuing rights of the PHA/IHA after acceptance of the completed work under paragraph (j) below.

(d) The presence or absence of the PHA/IHA inspector does not relieve the Contractor from any contract requirement, nor is the inspector authorized to change any term or condition of the specifications without the Contracting Officer's written authorization. All instructions and approvals with respect to the work shall be given to the Contractor by the Contracting Officer.

(e) The Contractor shall promptly furnish, without additional charge, all facilities, labor, and material reasonably needed for performing such safe and convenient inspections and tests as may be required by the Contracting Officer. The PHA/IHA may charge to the Contractor any additional cost of inspection or test when work is not ready at the time specified by the Contractor for inspection or test, or when prior rejection makes reinspection or retest necessary. The PHA/IHA shall perform all inspections and tests in a manner that will not unnecessarily delay the work. Special, full size, and performance tests shall be performed as described in the contract.

(f) The PHA/IHA may conduct routine inspections of the construction site on a daily basis.

(g) The Contractor shall, without charge, replace or correct work found by the PHA/IHA not to conform to contract requirements, unless the PHA/IHA decides that it is in its interest to accept the work with an appropriate adjustment in contract price. The Contractor shall promptly segregate and remove rejected material from the premises.

(h) If the Contractor does not promptly replace or correct rejected work, the PHA/IHA may (1) by contract or otherwise, replace or correct the work and charge the cost to the Contractor, or (2) terminate for default the Contractor's right to proceed.

(i) If any work requiring inspection is covered up without approval of the PHA/IHA, it must, if requested by the Contracting Officer, be uncovered at the expense of the Contractor. If at any time before final acceptance of the entire work, the PHA/IHA consid-

ers it necessary or advisable, to examine work already completed by removing or tearing it out, the Contractor, shall on request, promptly furnish all necessary facilities, labor, and material. If such work is found to be defective or nonconforming in any material respect due to the fault of the Contractor or its subcontractors, the Contractor shall defray all the expenses of the examination and of satisfactory reconstruction. If, however, such work is found to meet the requirements of the contract, the Contracting Officer shall make an equitable adjustment to cover the cost of the examination and reconstruction, including, if completion of the work was thereby delayed, an extension of time.

(j) The Contractor shall notify the Contracting Officer, in writing, as to the date when in its opinion all or a designated portion of the work will be substantially completed and ready for inspection. If the Architect determines that the state of preparedness is as represented, the PHA/IHA will promptly arrange for the inspection. Unless otherwise specified in the contract, the PHA/IHA shall accept, as soon as practicable after completion and inspection, all work required by the contract or that portion of the work the Contracting Officer determines and designates can be accepted separately. Acceptance shall be final and conclusive except for latent defects, fraud, gross mistakes amounting to fraud, or the PHA's/IHA's right under any warranty or guarantee.

21. Use and Possession Prior to Completion

(a) The PHA/IHA shall have the right to take possession of or use any completed or partially completed part of the work. Before taking possession of or using any work, the Contracting Officer shall furnish the Contractor a list of items of work remaining to be performed or corrected on those portions of the work that the PHA/IHA intends to take possession of or use. However, failure of the Contracting Officer to list any item of work shall not relieve the Contractor of responsibility for complying with the terms of the contract. The PHA/IHA's possession or use shall not be deemed an acceptance of any work under the contract.

(b) While the PHA/IHA has such possession or use, the Contractor shall be relieved of the responsibility for (1) the loss of or damage to the work resulting from the PHA/IHA's possession or use, notwithstanding the terms of the clause entitled **Permits and Codes** herein; (2) all maintenance costs on the areas occupied; and, (3) furnishing heat, light, power, and water used in the areas occupied without proper remuneration therefor. If prior possession or use by the PHA/IHA delays the progress of the work or causes additional expense to the Contractor, an equitable adjustment shall be made in the contract price or the time of completion, and the contract shall be modified in writing accordingly.

22. Warranty of Title

The Contractor warrants good title to all materials, supplies, and equipment incorporated in the work and agrees to deliver the premises together with all improvements thereon free from any claims, liens or charges, and agrees further that neither it nor any other person, firm or corporation shall have any right to a lien upon the premises or anything appurtenant thereto.

23. Warranty of Construction

(a) In addition to any other warranties in this contract, the Contractor warrants, except as provided in paragraph (j) of this clause, that work performed under this contract conforms to the contract requirements and is free of any defect in equipment, material, or workmanship performed by the Contractor or any subcontractor or supplier at any tier. This warranty shall continue for a period of _____ (one year unless otherwise indicated) from the date of final acceptance of the work. If the PHA/IHA takes possession of any part of the work before final acceptance, this warranty shall continue for a period of _____ (one year unless otherwise indicated) from the date that the PHA/IHA takes possession.

(b) The Contractor shall remedy, at the Contractor's expense, any failure to conform, or any defect. In addition, the Contractor shall remedy, at the Contractor's expense, any damage to PHA/IHA-owned or controlled real or personal property when the damage is the result of—

(1) The Contractor's failure to conform to contract requirements; or

(2) Any defects of equipment, material, workmanship or design furnished by the Contractor.

(c) The Contractor shall restore any work damaged in fulfilling the terms and conditions of this clause. The Contractor's warranty with respect to work repaired or replaced will run for _____ (one year unless otherwise indicated) from the date of repair or replacement.

(d) The Contracting Officer shall notify the Contractor, in writing, within a reasonable time after the discovery of any failure, defect or damage.

(e) If the Contractor fails to remedy any failure, defect, or damage within a reasonable time after receipt of notice, the PHA/IHA shall have the right to replace, repair or otherwise remedy the failure, defect, or damage at the Contractor's expense.

(f) With respect to all warranties, express or implied, from subcontractors, manufacturers, or suppliers for work performed and materials furnished under this contract, the Contractor shall:

(1) Obtain all warranties that would be given in normal commercial practice;

(2) Require all warranties to be executed in writing, for the benefit of the PHA/IHA; and,

(3) Enforce all warranties for the benefit of the PHA/IHA.

(g) In the event the Contractor's warranty under paragraph (a) of this clause has expired, the PHA/IHA may bring suit at its own expense to enforce a subcontractor's, manufacturer's or supplier's warranty.

(h) Unless a defect is caused by the negligence of the Contractor or subcontractor or supplier at any tier, the Contractor shall not be liable for the repair of any defect of material or design furnished by the PHA/IHA nor for the repair of any damage that results from any defect in PHA/IHA furnished material or design.

(i) Notwithstanding any provisions herein to the contrary, the establishment of the time periods in paragraphs (a) and (c) above relate only to the specific obligation of the Contractor to correct the work, and have no relationship to the time within which its obligation to comply with the contract may be sought to be enforced, nor to the time within which proceedings may be commenced to establish the Contractor's liability with respect to its obligation other than specifically to correct the work.

(j) This warranty shall not limit the PHA's/IHA's rights under the **Inspection and Acceptance of Construction** clause of this contract with respect to latent defects, gross mistakes or fraud.

24. Prohibition Against Liens

The Contractor is prohibited from placing a lien on the PHA's/IHA's property. This prohibition shall apply to all subcontractors at any tier and all materials suppliers.

Administrative Requirements

25. Contract Period

The Contractor shall complete all work required under this contract within _____ calendar days of the effective date of the contract, or within the time schedule established in the notice to proceed issued by the Contracting Officer.

26. Order of Precedence

In the event of a conflict between these General Conditions and the Specifications, the General Conditions shall prevail. In the event of a conflict between the contract and any applicable state or local law or regulation, the state or local law or regulation shall prevail; provided that such state or local law or regulation does not conflict with, or is less restrictive than applicable federal law, regulation, or Executive Order. In the event of such a conflict, applicable federal law, regulation, and Executive Order shall prevail.

27. Payments

(a) The PHA/IHA shall pay the Contractor the price as provided in this contract.

(b) The PHA/IHA shall make progress payments approximately every 30 days as the work proceeds, on estimates of work accomplished which meets the standards of quality established under the contract, as approved by the Contracting Officer. The PHA/IHA may, subject to written determination and approval of the Contracting Officer, make more frequent payments to contractors which are qualified small businesses.

(c) Before the first progress payment under this contract, the Contractor shall furnish, in such detail as requested by the Contracting Officer, a breakdown of the total contract price showing the amount included therein for each principal category of the work, which shall substantiate the payment amount requested in order to provide a basis for determining progress payments. The breakdown shall be approved by the Contracting Officer and must be acceptable to HUD. If the contract covers more than one project, the Contractor shall furnish a separate breakdown for each. The values and quantities employed in making up this breakdown are for determining the amount of progress payments and shall not be construed as a basis for additions to or deductions from the contract price. The Contractor shall prorate its overhead and profit over the construction period of the contract.

(d) The Contractor shall submit, on forms provided by the PHA/IHA, periodic estimates showing the value of the work performed during each period based upon the approved breakdown of the contract price. Such estimates shall be submitted not later than _____ days in advance of the date set for payment and are subject to correction and revision as required. The estimates must be approved by the Contracting Officer with the concurrence of the Architect prior to payment. If the contract covers more than one project, the Contractor shall furnish a separate progress payment estimate for each.

(e) Along with each request for progress payments and the required estimates, the Contractor shall furnish the following certification, or payment shall not be made:

I hereby certify, to the best of my knowledge and belief, that:

(1) The amounts requested are only for performance in accordance with the specifications, terms, and conditions of the contract;

(2) Payments to subcontractors and suppliers have been made from previous payments received under the contract, and timely payments will be made from the proceeds of the payment covered by this certification, in accordance with subcontract agreements; and,

(3) This request for progress payments does not include any amounts which the prime contractor intends to withhold or retain from a subcontractor or supplier in accordance with the terms and conditions of the subcontract.

Name: _____

Title: _____

Date: _____

(f) Except as otherwise provided in State law, the PHA/IHA shall retain ten (10) percent of the amount of progress payments until completion and acceptance of all work under the contract; except, that if upon completion of 50 percent of the work, the Contracting Officer, after consulting with the Architect, determines that the Contractor's performance and progress are satisfactory, the PHA/IHA may make the remaining payments in full for the work subsequently completed. If the Contracting Officer subsequently determines that the Contractor's performance and progress are unsatisfactory, the PHA/IHA shall reinstate the ten (10) percent (or other percentage as provided in State law) retainage until such time as the Contracting Officer determines that performance and progress are satisfactory.

(g) The Contracting Officer may authorize material delivered on the site and preparatory work done to be taken into consideration when computing progress payments. Material delivered to the Contractor at locations other than the site may also be taken into consideration if the Contractor furnishes satisfactory evidence that (1) it has acquired title to such material; (2) the material is properly stored in a bonded warehouse, storage yard, or similar suitable place as may be approved by the Contracting Officer; (3) the material is insured to cover its full value; and (4) the material will be used to perform this contract. Before any progress payment which includes delivered material is made, the Contractor shall furnish such documentation as the Contracting Officer may require to assure the protection of the PHA's/IHA's interest in such materials. The Contractor shall remain responsible for such stored material notwithstanding the transfer of title to the PHA/IHA.

(h) All material and work covered by progress payments made shall, at the time of payment become the sole property of the PHA/IHA, but this shall not be construed as (1) relieving the Contractor from the sole responsibility for all material and work upon which payments have been made or the restoration of any damaged work; or, (2) waiving the right of the PHA/IHA to require the fulfillment of all of the terms of the contract. In the event the work

of the Contractor has been damaged by other contractors or persons other than employees of the PHA/IHA in the course of their employment, the Contractor shall restore such damaged work without cost to the PHA/IHA and to seek redress for its damage only from those who directly caused it.

(i) The PHA/IHA shall make the final payment due the Contractor under this contract after (1) completion and final acceptance of all work; and (2) presentation of release of all claims against the PHA/IHA arising by virtue of this contract, other than claims, in stated amounts, that the Contractor has specifically excepted from the operation of the release. Each such exception shall embrace no more than one claim, the basis and scope of which shall be clearly defined. The amounts for such excepted claims shall not be included in the request for final payment. A release may also be required of the assignee if the Contractor's claim to amounts payable under this contract has been assigned.

(j) Prior to making any payment, the Contracting Officer may require the Contractor to furnish receipts or other evidence of payment from all persons performing work and supplying material to the Contractor, if the Contracting Officer determines such evidence is necessary to substantiate claimed costs.

(k) The PHA/IHA shall not (1) determine or adjust any claims for payment or disputes arising thereunder between the Contractor and its subcontractors or material suppliers; or, (2) withhold any moneys for the protection of the subcontractors or material suppliers. The failure or refusal of the PHA/IHA to withhold moneys from the Contractor shall in nowise impair the obligations of any surety or sureties under any bonds furnished under this contract.

28. Contract Modifications

(a) Only the Contracting Officer has authority to modify any term or condition of this contract. Any contract modification shall be authorized in writing.

(b) The Contracting Officer may modify the contract unilaterally - (1) pursuant to a specific authorization stated in a contract clause (e.g., Changes); or (2) for administrative matters which do not change the rights or responsibilities of the parties (e.g., change in the PHA/IHA address). All other contract modifications shall be in the form of supplemental agreements signed by the Contractor and the Contracting Officer.

(c) When a proposed modification requires the approval of HUD prior to its issuance (e.g., a change order that exceeds the PHA's/IHA's approved threshold), such modification shall not be effective until the required approval is received by the PHA/IHA.

29. Changes

(a) The Contracting Officer may, at any time, without notice to the sureties, by written order designated or indicated to be a change order, make changes in the work within the general scope of the contract including changes:

(1) In the specifications (including drawings and designs);

(2) In the method or manner of performance of the work;

(3) PHA/IHA-furnished facilities, equipment, materials, services, or site; or,

(4) Directing the acceleration in the performance of the work.

(b) Any other written order or oral order (which, as used in this paragraph (b), includes direction, instruction, interpretation, or determination) from the Contracting Officer that causes a change shall be treated as a change order under this clause; provided, that the Contractor gives the Contracting Officer written notice stating (1) the date, circumstances and source of the order and (2) that the Contractor regards the order as a change order.

(c) Except as provided in this clause, no order, statement or conduct of the Contracting Officer shall be treated as a change under this clause or entitle the Contractor to an equitable adjustment.

(d) If any change under this clause causes an increase or decrease in the Contractor's cost of, or the time required for the performance of any part of the work under this contract, whether or not changed by any such order, the Contracting Officer shall make an equitable adjustment and modify the contract in writing. However, except for a adjustment based on defective specifications, no proposal for any change under paragraph (b) above shall be allowed for any costs incurred more than 20 days (5 days for oral orders) before the Contractor gives written notice as required. In the case of defective specifications for which the PHA/IHA is responsible, the equitable adjustment shall include any increased cost reasonably incurred by the Contractor in attempting to comply with the defective specifications.

(e) The Contractor must assert its right to an adjustment under this clause within 30 days after (1) receipt of a written change order under paragraph (a) of this clause, or (2) the furnishing of a written notice under paragraph (b) of this clause, by submitting a written statement describing the general nature and the amount of the proposal. If the facts justify it, the Contracting Officer may extend the period for submission. The proposal may be included in the notice required under paragraph (b) above. No proposal by the Contractor for an equitable adjustment shall be allowed if asserted after final payment under this contract.

(f) The Contractor's written proposal for equitable adjustment shall be submitted in the form of a lump sum proposal supported with an itemized breakdown of all increases and decreases in the contract in at least the following details:

(1) Direct Costs. Materials (list individual items, the quantity and unit cost of each, and the aggregate cost); Transportation and delivery costs associated with materials; Labor breakdowns by hours or unit costs (identified with specific work to be performed); Construction equipment exclusively necessary for the change; Costs of preparation and/or revision to shop drawings resulting from the change; Worker's Compensation and Public Liability Insurance; Employment taxes under FICA and FUTA; and, Bond Costs - when size of change warrants revision.

(2) Indirect Costs. Indirect costs may include overhead, general and administrative expenses, and fringe benefits not normally treated as direct costs.

(3) Profit. The amount of profit shall be negotiated and may vary according to the nature, extent, and complexity of the work required by the change.

The allowability of the direct and indirect costs shall be determined in accordance with the Contract Cost Principles and Procedures for Commercial Firms in Part 31 of the Federal Acquisition Regulation (48 CFR 1-31), as implemented by HUD Handbook 2210.18, in effect on the date of this contract. The Contractor shall not be allowed a profit on the profit received by any subcontractor. Equitable adjustments for deleted work shall include a credit for profit and may include a credit for indirect costs. On proposals covering both increases and decreases in the

amount of the contract, the application of indirect costs and profit shall be on the net-change in direct costs for the Contractor or subcontractor performing the work.

(g) The Contractor shall include in the proposal its request for time extension (if any), and shall include sufficient information and dates to demonstrate whether and to what extent the change will delay the completion of the contract in its entirety.

(h) The Contracting Officer shall act on proposals within 30 days after their receipt, or notify the Contractor of the date when such action will be taken.

(i) Failure to reach an agreement on any proposal shall be a dispute under the clause entitled **Disputes** herein. Nothing in this clause, however, shall excuse the Contractor from proceeding with the contract as changed.

(j) Except in an emergency endangering life or property, no change shall be made by the Contractor without a prior order from the Contracting Officer.

30. Suspension of Work

(a) The Contracting Officer may order the Contractor in writing to suspend, delay, or interrupt all or any part of the work of this contract for the period of time that the Contracting Officer determines appropriate for the convenience of the PHA/IHA.

(b) If the performance of all or any part of the work is, for an unreasonable period of time, suspended, delayed, or interrupted (1) by an act of the Contracting Officer in the administration of this contract, or (2) by the Contracting Officer's failure to act within the time specified (or within a reasonable time if not specified) in this contract an adjustment shall be made for any increase in the cost of performance of the contract (excluding profit) necessarily caused by such unreasonable suspension, delay, or interruption and the contract modified in writing accordingly. However, no adjustment shall be made under this clause for any suspension, delay, or interruption to the extent that performance would have been so suspended, delayed, or interrupted by any other cause, including the fault or negligence of the Contractor or for which any equitable adjustment is provided for or excluded under any other provision of this contract.

(c) A claim under this clause shall not be allowed (1) for any costs incurred more than 20 days before the Contractor shall have notified the Contracting Officer in writing of the act or failure to act involved (but this requirement shall not apply as to a claim resulting from a suspension order); and, (2) unless the claim, in an amount stated, is asserted in writing as soon as practicable after the termination of the suspension, delay, or interruption, but not later than the date of final payment under the contract.

31. Disputes

(a) "Claim," as used in this clause, means a written demand or written assertion by one of the contracting parties seeking, as a matter of right, the payment of money in a sum certain, the adjustment or interpretation of contract terms, or other relief arising under or relating to the contract. A claim arising under the contract, unlike a claim relating to the contract, is a claim that can be resolved under a contract clause that provides for the relief sought by the claimant. A voucher, invoice, or other routine request for payment that is not in dispute when submitted is not a claim. The submission may be converted to a claim by complying with the requirements of this clause, if it is disputed either as to liability or amount or is not acted upon in a reasonable time.

(b) Except for disputes arising under the clauses entitled ***Labor Standards and Labor Standards- Nonroutine Maintenance***, herein, all disputes arising under or relating to this contract, including any claims for damages for the alleged breach thereof which are not disposed of by agreement, shall be resolved under this clause.

(c) All claims by the Contractor shall be made in writing and submitted to the Contracting Officer for a written decision. A claim by the PHA/IHA against the Contractor shall be subject to a written decision by the Contracting Officer.

(d) The Contracting Officer shall, within _____ 60 unless otherwise indicated) days after receipt of the request, decide the claim or notify the Contractor of the date by which the decision will be made.

(e) The Contracting Officer's decision shall be final unless the Contractor (1) appeals in writing to a higher level in the PHA/IHA in accordance with the PHA's/IHA's policy and procedures, (2) refers the appeal to an independent mediator or arbitrator, or (3) files suit in a court of competent jurisdiction. Such appeal must be made within _____ (30 unless otherwise indicated) days after receipt of the Contracting Officer's decision.

(f) The Contractor shall proceed diligently with performance of this contract, pending final resolution of any request for relief, claim, appeal, or action arising under or relating to the contract, and comply with any decision of the Contracting Officer.

32. Default

(a) If the Contractor refuses or fails to prosecute the work, or any separable part thereof, with the diligence that will insure its completion within the time specified in this contract, or any extension thereof, or fails to complete said work within this time, the Contracting Officer may, by written notice to the Contractor, terminate the right to proceed with the work (or separable part of the work) that has been delayed. In this event, the PHA/IHA may take over the work and complete it, by contract or otherwise, and may take possession of and use any materials, equipment, and plant on the work site necessary for completing the work. The Contractor and its sureties shall be liable for any damage to the PHA/IHA resulting from the Contractor's refusal or failure to complete the work within the specified time, whether or not the Contractor's right to proceed with the work is terminated. This liability includes any increased costs incurred by the PHA/IHA in completing the work.

(b) The Contractor's right to proceed shall not be terminated or the Contractor charged with damages under this clause if—

(1) The delay in completing the work arises from unforeseeable causes beyond the control and without the fault or negligence of the Contractor. Examples of such causes include (i) acts of God, or of the public enemy, (ii) acts of the PHA/IHA or other governmental entity in either its sovereign or contractual capacity, (iii) acts of another contractor in the performance of a contract with the PHA/IHA, (iv) fires, (v) floods, (vi) epidemics, (vii) quarantine restrictions, (viii) strikes, (ix) freight embargoes, (x) unusually severe weather, or (xi) delays of subcontractors or suppliers at any tier arising from unforeseeable causes beyond the control and without the fault or negligence of both the Contractor and the subcontrac-

tors or suppliers; and

(2) The Contractor, within ____ ____ days (10 days unless otherwise indicated) from the beginning of such delay (unless extended by the Contracting Officer) notifies the Contracting Officer in writing of the causes of delay. The Contracting Officer shall ascertain the facts and the extent of the delay. If, in the judgment of the Contracting Officer, the findings of fact warrant such action, time for completing the work shall be extended by written modification to the contract. The findings of the Contracting Officer shall be reduced to a written decision which shall be subject to the provisions of the ***Disputes*** clause of this contract.

(c) If, after termination of the Contractor's right to proceed, it is determined that the Contractor was not in default, or that the delay was excusable, the rights and obligations of the parties will be the same as if the termination had been for convenience of the PHA/IHA.

33. Liquidated Damages

(a) If the Contractor fails to complete the work within the time specified in the contract, or any extension, as specified in the clause entitled ***Default*** of this contract, the Contractor shall pay to the PHA/IHA as liquidated damages, the sum of $ [Contracting Officer insert amount] for each day of delay. If different completion dates are specified in the contract for separate parts or stages of the work, the amount of liquidated damages shall be assessed on those parts or stages which are delayed. To the extent that the Contractor's delay or nonperformance is excused under another clause in this contract, liquidated damages shall not be due the PHA/IHA. The Contractor remains liable for damages caused other than by delay.

(b) If the PHA/IHA terminates the Contractor's right to proceed, the resulting damage will consist of liquidated damages until such reasonable time as may be required for final completion of the work together with any increased costs occasioned the PHA/IHA in completing the work.

(c) If the PHA/IHA does not terminate the Contractor's right to proceed, the resulting damage will consist of liquidated damages until the work is completed or accepted.

34. Termination for Convenience

(a) The Contracting Officer may terminate this contract in whole, or in part, whenever the Contracting Officer determines that such termination is in the best interest of the PHA/IHA. Any such termination shall be effected by delivery to the Contractor of a Notice of Termination specifying the extent to which the performance of the work under the contract is terminated, and the date upon which such termination becomes effective.

(b) If the performance of the work is terminated, either in whole or in part, the PHA/IHA shall be liable to the Contractor for reasonable and proper costs resulting from such termination upon the receipt by the PHA/IHA of a properly presented claim setting out in detail: (1) the total cost of the work performed to date of termination less the total amount of contract payments made to the Contractor; (2) the cost (including reasonable profit) of settling and paying claims under subcontracts and material orders for work performed and materials and supplies delivered to the site, payment for which has not been made by the PHA to the Contractor or by the Contractor to the subcontractor or supplier; (3) the cost of preserving and protecting the work already performed until the PHA/IHA or assignee takes possession thereof or assumes responsibility therefor; (4) the actual or estimated cost of legal and accounting services reasonably necessary to prepare and present the termination claim to the PHA/IHA; and (5) an amount constituting a reasonable profit on the value of the work performed by the Contractor.

(c) The Contracting Officer will act on the Contractor's claim within _____ days (60 days unless otherwise indicated) of receipt of the Contractor's claim.

(d) Any disputes with regard to this clause are expressly made subject to the provisions of the ***Disputes*** clause of this contract.

35. Assignment of Contract

The Contractor shall not assign or transfer any interest in this contract; except that claims for monies due or to become due from the PHA/IHA under the contract may be assigned to a bank, trust company, or other financial institution. Such assignments of claims shall only be made with the written concurrence of the Contracting Officer. If the Contractor is a partnership, this contract shall inure to the benefit of the surviving or remaining member(s) of such partnership as approved by the Contracting Officer.

36. Insurance

(a) Before commencing work, the Contractor and each subcontractor shall furnish the PHA/IHA with certificates of insurance showing the following insurance is in force and will insure all operations under the Contract:

(1) Workers' Compensation, in accordance with state or Territorial Workers' Compensation laws.

(2) Commercial General Liability with a combined single limit for bodily injury and property damage of not less than $_____[Contracting Officer insert amount] per occurrence to protect the Contractor and each subcontractor against claims for bodily injury or death and damage to the property of others. This shall cover the use of all equipment, hoists, and vehicles on the site(s) not covered by Automobile Liability under (3) below. If the Contractor has a "claims-made" policy, then the following additional requirements apply: the policy must provide a "retroactive date" which must be on or before the execution date of the Contract; and the extended reporting period may not be less than five years following the completion date of the Contract.

(3) Automobile Liability on owned and non-owned motor vehicles used on the site(s) or in connection therewith for a combined single limit for bodily injury and property damage of not less than $_____ [Contracting Officer insert amount] per occurrence.

(b) Before commencing work, the Contractor shall furnish the PHA/IHA with a certificate of insurance evidencing that Builder's Risk (fire and extended coverage) Insurance on all work in place and/or materials stored at the building site(s), including foundations and building equipment, is in force. The Builder's Risk Insurance shall be for the benefit of the Contractor and the PHA/IHA as their interests may appear and each shall be named in the policy or policies as an insured. The Contractor

in installing equipment supplied by the PHA/IHA shall carry insurance on such equipment from the time the Contractor takes possession thereof until the Contract work is accepted by the PHA/IHA. The Builder's Risk Insurance need not be carried on excavations, piers, footings, or foundations until such time as work on the super-structure is started. It need not be carried on landscape work. Policies shall furnish coverage at all times for the full cash value of all completed construction, as well as materials in place and/or stored at the site(s), whether or not partial payment has been made by the PHA/IHA. The Contractor may terminate this insurance on buildings as of the date taken over for occupancy by the PHA/IHA. The Contractor is not required to carry Builder's Risk Insurance for modernization work which does not involve structural alterations or additions and where the PHA's/IHA's existing fire and extended coverage policy can be endorsed to include such work.

(c) All insurance shall be carried with companies which are financially responsible and admitted to do business in the State in which the project is located. If any such insurance is due to expire during the construction period, the Contractor (including subcontractors, as applicable) shall not permit the coverage to lapse and shall furnish evidence of coverage to the Contracting Officer. All certificates of insurance, as evidence of coverage, shall provide that no coverage may be canceled or non-renewed by the insurance company until at least 30 days prior written notice has been given to the Contracting Officer.

37. Subcontracts

(a) Definitions. As used in this contract -

(1) **"Subcontract"** means any contract, purchase order, or other purchase agreement, including modifications and change orders to the foregoing, entered into by a subcontractor to furnish supplies, materials, equipment, and services for the performance of the prime contract or a subcontract.

(2) **"Subcontractor"** means any supplier, vendor, or firm that furnishes supplies, materials, equipment, or services to or for the Contractor or another subcontractor.

(b) The Contractor shall not enter into any subcontract with any subcontractor who has been temporarily denied participation in a HUD program or who has been suspended or debarred from participating in contracting programs by any agency of the United States Government or of the state in which the work under this contract is to be performed.

(c) The Contractor shall be as fully responsible for the acts or omissions of its subcontractors, and of persons either directly or indirectly employed by them as for the acts or omissions of persons directly employed by the Contractor.

(d) The Contractor shall insert appropriate clauses in all subcontracts to bind subcontractors to the terms and conditions of this contract insofar as they are applicable to the work of subcontractors.

(e) Nothing contained in this contract shall create any contractual relationship between any subcontractor and the PHA/IHA or between the subcontractor and HUD.

38. Subcontracting with Small and Minority Firms, Women's Business Enterprise, and Labor Surplus Area Firms

The Contractor shall take the following steps to ensure that, whenever possible, subcontracts are awarded to small business firms, minority firms, women's business enterprises, and labor surplus area firms:

(a) Placing qualified small and minority businesses and women's business enterprises on solicitation lists;

(b) Ensuring that small and minority businesses and women's business enterprises are solicited whenever they are potential sources;

(c) Dividing total requirements, when economically feasible, into smaller tasks or quantities to permit maximum participation by small and minority businesses and women's business enterprises;

(d) Establishing delivery schedules, where the requirements of the contract permit, which encourage participation by small and minority businesses and women's business enterprises; and

(e) Using the services and assistance of the U.S. Small Business Administration, the Minority Business Development Agency of the U.S. Department of Commerce, and State and local governmental small business agencies.

39. Equal Employment Opportunity

During the performance of this contract, the Contractor agrees as follows:

(a) The Contractor shall not discriminate against any employee or applicant for employment because of race, color, religion, sex, national origin, or handicap.

(b) The Contractor shall take affirmative action to ensure that applicants are employed, and that employees are treated during employment without regard to their race, color, religion, sex, national origin, or handicap. Such action shall include, but not be limited to, (1) employment, (2) upgrading, (3) demotion, (4) transfer, (5) recruitment or recruitment advertising, (6) layoff or termination, (7) rates of pay or other forms of compensation, and (8) selection for training, including apprenticeship.

(c) The Contractor shall post in conspicuous places available to employees and applicants for employment the notices to be provided by the Contracting Officer that explain this clause.

(d) The Contractor shall, in all solicitations or advertisements for employees placed by or on behalf of the Contractor, state that all qualified applicants will receive consideration for employment without regard to race, color, religion, sex, national origin, or handicap.

(e) The Contractor shall send, to each labor union or representative of workers with which it has a collective bargaining agreement or other contract or understanding, the notice to be provided by the Contracting Officer advising the labor union or workers' representative of the Contractor's commitments under this clause, and post copies of the notice in conspicuous places available to employees and applicants for employment.

(f) The Contractor shall comply with Executive Order 11246, as amended, and the rules, regulations, and orders of the Secretary of Labor.

(g) The Contractor shall furnish all information and reports required by Executive Order 11246, as amended, Section 503 of the Rehabilitation Act of 1973, as amended, and by rules, regulations, and orders of the Secretary of Labor, or pursuant thereto. The Contractor shall permit access to its books, records, and accounts by the Secretary of Labor for purposes of investigation to ascertain compliance with such rules, regulations, and orders.

(h) In the event of a determination that the Contractor is not in

compliance with this clause or any rule, regulation, or order of the Secretary of Labor, this contract may be canceled, terminated, or suspended in whole or in part, and the Contractor may be declared ineligible for further Government contracts, or Federally assisted construction contracts under the procedures authorized in Executive Order 11246, as amended. In addition, sanctions may be imposed and remedies invoked against the Contractor as provided in Executive Order 11246, as amended, the rules, regulations, and orders of the Secretary of Labor, or as otherwise provided by law.

(i) The Contractor shall include the terms and conditions of this clause in every subcontract or purchase order unless exempted by the rules, regulations, or orders of the Secretary of Labor issued under Executive Order 11246, as amended, so that these terms and conditions will be binding upon each subcontractor or vendor. The Contractor shall take such action with respect to any subcontract or purchase order as the Secretary of Housing and Urban Development or the Secretary of Labor may direct as a means of enforcing such provisions, including sanctions for noncompliance; provided that if the Contractor becomes involved in, or is threatened with, litigation with a subcontractor or vendor as a result of such direction, the Contractor may request the United States to enter into the litigation to protect the interests of the United States.

(j) Compliance with the requirements of this clause shall be to the maximum extent consistent with, but not in derogation of, compliance with section 7(b) of the Indian Self-Determination and Education Assistance Act and the ***Indian Preference*** clause of this contract.

40. Employment, Training, and Contracting Opportunities for Low-Income Persons, Section 3 of the Housing and Urban Development Act of 1968.

(a) The work to be performed under this contract is subject to the requirements of section 3 of the Housing and Urban Development Act of 1968, as amended, 12 U.S.C. 1701u (section 3). The purpose of section 3 is to ensure that employment and other economic opportunities generated by HUD assistance or HUD-assisted projects covered by section 3, shall, to the greatest extent feasible, be directed to low- and very low-income persons, particularly persons who are recipients of HUD assistance for housing.

(b) The parties to this contract agree to comply with HUDs regulations in 24 CFR part 135, which implement section 3. As evidenced by their execution of this contract, the parties to this contract certify that they are under no contractual or other impediment that would prevent them from complying with the part 135 regulations.

(c) The contractor agrees to send to each labor organization or representative of workers with which the contractor has a collective bargaining agreement or other understanding, if any, a notice advising the labor organization or workers representative of the contractors commitments under this section 3 clause, and will post copies of the notice in conspicuous places at the work site where both employees and applicants for training and employment positions can see the notice. The notice shall describe the section 3 preference, shall set forth minimum number and job titles subject to hire, availability of apprenticeship and training positions, the qualifications for each; and the name and location of the person(s) taking applications for each of the positions; and the anticipated date the work shall begin.

(d) The contractor agrees to include this section 3 clause in every subcontract subject to compliance with regulations in 24 CFR part 135, and agrees to take appropriate action, as provided in an applicable provision of the subcontract or in this section 3 clause, upon a finding that the subcontractor is in violation of the regulations in 24 CFR part 135. The contractor will not subcontract with any subcontractor where the contractor has notice or knowledge that the subcontractor has been found in violation of the regulations in 24 CFR part 135.

(e) The contractor will certify that any vacant employmen positions, including training positions, that are filled (1) after the contractor is selected but before the contract is executed, and (2) with persons other than those to whom the regulations of 24 CFR part 135 require employment opportunities to be directed, were not filled to circumvent the contractors obligations under 24 CFR part 135.

(f) Noncompliance with HUDs regulations in 24 CFR part 135 may result in sanctions, termination of this contract for default, and debarment or suspension from future HUD assisted contracts.

(g) With respect to work performed in connection with section 3 covered Indian housing assistance, section 7(b) of the Indian Self-Determination and Education Assistance Act (25 U.S.C. 450e) also applies to the work to be performed under this contract. Section 7(b) requires that to the greatest extent feasible (i) preference and opportunities for training and employment shall be given to Indians, and (ii) preference in the award of contracts and subcontracts shall be given to Indian organizations and Indian-owned Economic Enterprises. Parties to this contract that are subject to the provisions of section 3 and section 7(b) agree to comply with section 3 to the maximum extent feasible, but not in derogation of compliance with section 7(b).

(h) Pursuant to 24 CFR 905.170(b), compliance with Section 3 requirements shall be to the maximum extent consistent with, but not in derogation of compliance with section 7(b) of the Indian Self-Determination and Education Assistance, 25 U.S.C. section 450e(b) when this law is applicable.

41. Indian Preference Applicable to contracts awarded by Indian Housing Authorities for projects owned or controlled by Indian Housing Authorities.

(a) The work to be performed under this contract is on a project subject to section 7(b) of the Indian Self-Determination and Education Assistance Act (25 U.S.C. 450e(b)). Section 7(b) requires that to the greatest extent feasible (1) preference and opportunities for training and employment shall be given to Indians, and (2) preferences in the award of contracts and subcontracts shall be given to Indian organizations and Indian-owned Economic Enterprises.

(b) The parties to this contract shall comply with the provisions of Section 7(b) of the Indian Self-Determination and Education Assistance Act (25 U.S.C. 450e(b)) and all HUD requirements adopted pursuant to section 7(b).

(c) In connection with this contract, the parties shall, to the greatest extent feasible, give preference in the award of any subcontracts to Indian organizations and Indian-owned Economic Enterprises, and preferences and opportunities for training and employment to Indians.

(d) This section 7(b) clause shall be incorporated into every subcontract in connection with the project.
(e) Upon a finding by the IHA or HUD that any party to this contract is not in compliance with the section 7(b) clause, said party shall, at the direction of the IHA, take appropriate remedial action pursuant to the contract.

42. Interest of Members of Congress

No member of or delegate to the Congress of the United States of America shall be admitted to any share or part of this contract or to any benefit that may arise therefrom.

43. Interest of Members, Officers, or Employees and Former Members, Officers, or Employees

No member, officer, or employee of the PHA/IHA, no member of the governing body of the locality in which the project is situated, no member of the governing body of the locality in which the PHA/IHA was activated, and no other public official of such locality or localities who exercises any functions or responsibilities with respect to the project, shall, during his or her tenure, or for one year thereafter, have any interest, direct or indirect, in this contract or the proceeds thereof.

44. Limitations on Payments made to Influence Certain Federal Financial Transactions

(a) The Contractor agrees to comply with Section 1352 of title 31, United States Code which prohibits the use of Federal appropriated funds to pay any person for influencing or attempting to influence an officer or employee of any agency, a Member of Congress, and officer or employee of Congress, or an employee of a Member of Congress in connection with any of the following covered Federal actions: the awarding of any Federal contract; the making of any Federal grant; the making of any Federal loan; the entering into of any cooperative agreement; or the modification of any Federal contract, grant, loan, or cooperative agreement.
(b) The Contractor further agrees to comply with the requirement of the Act to furnish a disclosure (OMB Standard Form LLL, Disclosure of Lobbying Activities) if any funds other than Federal appropriated funds (including profit or fee received under a covered Federal transaction) have been paid, or will be paid, to any person for influencing or attempting to influence an officer or employee of any agency, a Member of Congress, an officer or employee of Congress, or an employee of a Member of Congress in connection with a Federal contract, grant, loan, or cooperative agreement.
(c) Indian tribes (except those chartered by States) and Indian organizations as defined in section 4 of the Indian Self-Determination and Education Assistance Act (25 U.S.C. 450B) are exempt from the requirements of this clause.

45. Royalties and Patents

The Contractor shall pay all royalties and license fees. It shall defend all suits or claims for infringement of any patent rights and shall save the PHA/IHA harmless from loss on account thereof; except that the PHA/IHA shall be responsible for all such loss when a particular design, process or the product of a particular manufacturer or manufacturers is specified and the Contractor has no reason to believe that the specified design, process, or product is an infringement. If, however, the Contractor has reason to believe that any design, process or product specified is an infringement of a patent, the Contractor shall promptly notify the Contracting Officer. Failure to give such notice shall make the Contractor responsible for resultant loss.

46. Examination and Retention of Contractor's Records

(a) The PHA/IHA, HUD, or Comptroller General of the United States, or any of their duly authorized representatives shall, until 3 years after final payment under this contract, have access to and the right to examine any of the Contractor's directly pertinent books, documents, papers, or other records involving transactions related to this contract for the purpose of making audit, examination, excerpts, and transcriptions.
(b) The Contractor agrees to include in first-tier subcontracts under this contract a clause substantially the same as paragraph (a) above. "Subcontract," as used in this clause, excludes purchase orders not exceeding $10,000.
(c) The periods of access and examination in paragraphs (a) and (b) above for records relating to (1) appeals under the ***Disputes*** clause of this contract, (2) litigation or settlement of claims arising from the performance of this contract, or (3) costs and expenses of this contract to which the PHA/IHA, HUD, or Comptroller General or any of their duly authorized representatives has taken exception shall continue until disposition of such appeals, litigation, claims, or exceptions.

47. Labor Standards - Davis-Bacon and Related Acts

If the total amount of this contract exceeds $2,000, the Federal labor standards set forth in the clause below shall apply to the construction work to be performed under the contract, except if the construction work has been determined to be "Nonroutine Maintenance" subject to the terms of that clause of this contract.

(a) **Minimum Wages.**
(1) All laborers and mechanics employed or working upon the site of the work (or, under the United States Housing Act of 1937 or under the Housing Act of 1949, in the construction or development of the project) will be paid unconditionally and not less often than once a week, and without subsequent deduction or rebate on any account (except such payroll deductions as are permitted by regulations issued by the Secretary of Labor under the Copeland Act (29 CFR Part 3)), the full amount of wages and bona fide fringe benefits (or cash equivalents thereof) due at time of payment computed at rates not less than those contained in the wage determination of the Secretary of Labor which is attached hereto and made a part hereof, regardless of any contractual relationship which may be alleged to exist between the Contractor and such laborers and mechanics. Contributions made or costs reasonably anticipated for bona fide fringe benefits under Section 1(b)(2) of the Davis-Bacon Act on behalf of laborers or mechanics are considered wages paid to such laborers or mechanics, subject to the provisions of 29 CFR 5.5(a)(1)(iv); also, regular contributions made or costs incurred for more than a weekly period (but not less often than quarterly) under plans, funds, or programs, which cover the regular weekly period, are deemed to be constructively made or incurred during such weekly period. Such laborers and mechanics shall be paid not less than the appropriate wage rate and

fringe benefits in the wage determination for the classification of work actually performed, without regard to skill, except as provided in 29 CFR Part 5.5(a)(4). Laborers or mechanics performing work in more than one classification may be compensated at the rate specified for each classification for the time actually worked therein; provided, that the employer's payroll records accurately set forth the time spent in each classification in which work is performed. The wage determination (including any additional classification and wage rates conformed under 29 CFR 5.5(a)(1)(ii) and the Davis-Bacon poster (WH-1321) shall be posted at all times by the Contractor and its subcontractors at the site of the work in a prominent and accessible place where it can be easily seen by the workers.

(2) (i) Any class of laborers or mechanics which is not listed in the wage determination and which is to be employed under the contract shall be classified in conformance with the wage determination. HUD shall approve an additional classification and wage rate and fringe benefits therefor only when all the following criteria have been met:

(A) The work to be performed by the classification requested is not performed by a classification in the wage determination;

(B) The classification is utilized in the area by the construction industry; and

(C) The proposed wage rate, including any bona fide fringe benefits, bears a reasonable relationship to the wage rates contained in the wage determination.

(ii) If the Contractor and the laborers and mechanics to be employed in the classification (if known), or their representatives, and HUD or its designee agree on the classification and wage rate (including the amount designated for fringe benefits where appropriate), a report of the action taken shall be sent by HUD or its designee to the Administrator of the Wage and Hour Division, Employee Standards Administration, U.S. Department of Labor, Washington, DC 20210. The Administrator, or an authorized representative, will approve, modify, or disapprove every additional classification action within 30 days of receipt and so advise HUD or its designee or will notify HUD or its designee within the 30-day period that additional time is necessary.

(iii) In the event the Contractor, the laborers or mechanics to be employed in the classification or their representatives, and HUD or its designee do not agree on the proposed classification and wage rate (including the amount designated for fringe benefits, where appropriate), HUD or its designee shall refer the questions, including the views of all interested parties and the recommendation of HUD or its designee, to the Administrator of the Wage and Hour Division for determination. The Administrator, or an authorized representative, will issue a determination within 30 days of receipt and so advise HUD or its designee or will notify HUD or its designee within the 30-day period that additional time is necessary.

(iv) The wage rate (including fringe benefits where appropriate) determined pursuant to subparagraphs (b)(2)(ii) or (iii) of this clause shall be paid to all workers performing work in the classification under this contract from the first day on which work is performed in the classification.

(3) Whenever the minimum wage rate prescribed in the contract for a class of laborers or mechanics includes a fringe benefit which is not expressed as an hourly rate, the Contractor shall either pay the benefit as stated in the wage determination or shall pay another bona fide fringe benefit or an hourly cash equivalent thereof.

(4) If the Contractor does not make payments to a trustee or other third person, the Contractor may consider as part of the wages of any laborer or mechanic the amount of any costs reasonably anticipated in providing bona fide fringe benefits under a plan or program; ***provided***, that the Secretary of Labor has found, upon the written request of the Contractor, that the applicable standards of the Davis-Bacon Act have been met. The Secretary of Labor may require the Contractor to set aside in a separate account assets for the meeting of obligations under the plan or program.

(b) **Withholding of funds.** HUD or its designee shall, upon its own action or upon written request of an authorized representative of the Department of Labor, withhold or cause to be withheld from the Contractor under this contract or any other Federal contract with the same prime Contractor, or any other Federally-assisted contract subject to Davis-Bacon prevailing wage requirements, which is held by the same prime Contractor, so much of the accrued payments or advances as may be considered necessary to pay laborers and mechanics, including apprentices, trainees, and helpers, employed by the Contractor or any subcontractor the full amount of wages required by the contract. In the event of failure to pay any laborer or mechanic, including any apprentice, trainee, or helper, employed or working on the site of the work (or, under the United States Housing Act of 1937 or under the Housing Act of 1949, in the construction or development of the project), all or part of the wages required by the contract, HUD or its designee may, after written notice to the Contractor, take such action as may be necessary to cause the suspension of any further payment, advance, or guarantee of funds until such violations have ceased. HUD or its designee may, after written notice to the Contractor, disburse such amounts withheld for and on account of the Contractor or subcontractor to the respective employees to whom they are due. The Comptroller General shall make such disbursements in the case of direct Davis-Bacon Act contracts.

(c) **Payrolls and basic records.** (1) Payrolls and basic records relating thereto shall be maintained by the Contractor during the course of the work and preserved for a period of three years thereafter for all laborers and mechanics working at the site of the work (or, under the United States Housing Act of 1937 or under the Housing Act of 1949, in the construction or development of the project). Such records shall contain the name, address, and social security number of each such worker, his or her correct classification, hourly rates of wages paid (including rates of contributions or costs anticipated for bona fide fringe benefits or cash equivalents thereof of the types described in section 1(b)(2)(B) of the Davis-Bacon Act), daily and weekly number of hours worked, deductions made, and actual wages paid. Whenever the Secretary of Labor has found, under 29 CFR 5.5(a)(1)(iv), that the wages of any laborer or mechanic include the amount of costs reasonably anticipated in providing benefits

under a plan or program described in section 1(b)(2)(B) of the Davis-Bacon Act, the Contractor shall maintain records which show that the commitment to provide such benefits is enforceable, that the plan or program is financially responsible, and that the plan or program has been communicated in writing to the laborers or mechanics affected, and records which show the costs anticipated or the actual cost incurred in providing such benefits. Contractors employing apprentices or trainees under approved programs shall maintain written evidence of the registration of apprenticeship programs and certification of trainee programs, the registration of the apprentices and trainees, and the ratios and wage rates prescribed in the applicable programs.

(2) (i) The Contractor shall submit weekly for each week in which any contract work is performed a copy of all payrolls to the Contracting Officer for transmission to HUD or its designee. The payrolls submitted shall set out accurately and completely all of the information required to be maintained under subparagraph (c)(1) of this clause. This information may be submitted in any form desired. Optional Form WH-347 (Federal Stock Number 029-005-00014-1) is available for this purpose and may be purchased from the Superintendent of Documents, U.S. Government Printing Office, Washington, D.C. 20402. The prime Contractor is responsible for the submission of copies of payrolls by all subcontractors.

(ii) Each payroll submitted shall be accompanied by a "Statement of Compliance," signed by the Contractor or subcontractor or his or her agent who pays or supervises the payment of the persons employed under the contract and shall certify the following:

(A) That the payroll for the payroll period contains the information required to be maintained under paragraph (c)(1) of this clause and that such information is correct and complete;

(B) That each laborer or mechanic (including each helper, apprentice, and trainee) employed on the contract during the payroll period has been paid the full weekly wages earned, without rebate, either directly or indirectly, and that no deductions have been made either directly or indirectly from the full wages earned, other than permissible deductions as set forth in 29 CFR Part 3; and

(C) That each laborer or mechanic has been paid not less than the applicable wage rates and fringe benefits or cash equivalents for the classification of work performed, as specified in the applicable wage determination incorporated into the contract.

(iii) The weekly submission of a properly executed certification set forth on the reverse side of Optional Form WH-347 shall satisfy the requirements for submission of the "Statement of Compliance" required by subparagraph (c)(2)(ii) of this clause.

(iv) The falsification of any of the above certifications may subject the Contractor or subcontractor to civil or criminal prosecution under Section 1001 of Title 18 and Section 3729 of Title 31 of the United States Code.

(3) The Contractor or subcontractor shall make the records required under subparagraph (d)(1) available for inspection, copying, or transcription by authorized representatives of HUD or its designee, the Contracting Officer, or the Department of Labor and shall permit such representatives to interview employees during working hours on the job. If the Contractor or subcontractor fails to submit the required records or to make them available, HUD or its designee may, after written notice to the Contractor, take such action as may be necessary to cause the suspension of any further payment, advance, or guarantee of funds. Furthermore, failure to submit the required records upon request or to make such records available may be grounds for debarment action pursuant to 29 CFR 5.12.

(d) (1) **Apprentices.** Apprentices will be permitted to work at less than the predetermined rate for the work they performed when they are employed pursuant to and individually registered in a bona fide apprenticeship program registered with the U.S. Department of Labor, Employment and Training Administration, Bureau of Apprenticeship and Training, or with a State Apprenticeship Agency recognized by the Bureau, or if a person is employed in his or her first 90 days of probationary employment as an apprentice in such an apprenticeship program, who is not individually registered in the program, but who has been certified by the Bureau of Apprenticeship and Training or a State Apprenticeship Agency (where appropriate) to be eligible for probationary employment as an apprentice. The allowable ratio of apprentices to journeymen on the job site in any craft classification shall not be greater than the ratio permitted to the Contractor as to the entire work force under the registered program. Any worker listed on a payroll at an apprentice wage rate, who is not registered or otherwise employed as stated in this paragraph, shall be paid not less than the applicable wage rate on the wage determination for the classification of work actually performed. In addition, any apprentice performing work on the job site in excess of the ratio permitted under the registered program shall be paid not less than the applicable wage rate on the wage determination for the work actually performed. Where a contractor is performing construction on a project in a locality other than that in which its program is registered, the ratios and wage rates (expressed in percentages of the journeyman's hourly rate) specified in the Contractor's or subcontractor's registered program shall be observed. Every apprentice must be paid at not less than the rate specified in the registered program for the apprentice's level of progress, expressed as a percentage of the journeyman hourly rate specified in the applicable wage determination. Apprentices shall be paid fringe benefits in accordance with the provisions of the apprenticeship program. If the apprenticeship program does not specify fringe benefits, apprentices must be paid the full amount of fringe benefits listed on the wage determination for the applicable classification. If the Administrator of the Wage and Hour Division determines that a different practice prevails for the applicable apprentice classification, fringes shall be paid in accordance with that determination. In the event the Bureau of Apprenticeship and Training, or a State Apprenticeship Agency recognized by the Bureau, withdraws approval of an apprenticeship program, the Contractor will no longer be permitted to utilize apprentices at less than the applicable predetermined rate for the work performed until an accept-

able program is approved.

(2) **Trainees.** Except as provided in 29 CFR 5.16, trainees will not be permitted to work at less than the predetermined rate for the work performed unless they are employed pursuant to and individually registered in a program which has received prior approval, evidenced by formal certification by the U.S. Department of Labor, Employment and Training Administration. The ratio of trainees to journeymen on the job site shall not be greater than permitted under the plan approved by the Employment and Training Administration. Every trainee must be paid at not less than the rate specified in the approved program for the trainee's level of progress, expressed as a percentage of the journeyman hourly rate specified in the applicable wage determination. Trainees shall be paid fringe benefits in accordance with the provisions of the trainee program. If the trainee program does not mention fringe benefits, trainees shall be paid the full amount of fringe benefits listed in the wage determination unless the Administrator of the Wage and Hour Division determines that there is an apprenticeship program associated with the corresponding journeyman wage rate in the wage determination which provides for less than full fringe benefits for apprentices. Any employee listed on the payroll at a trainee rate who is not registered and participating in a training plan approved by the Employment and Training Administration shall be paid not less than the applicable wage rate in the wage determination for the classification of work actually performed. In addition, any trainee performing work on the job site in excess of the ratio permitted under the registered program shall be paid not less than the applicable wage rate in the wage determination for the work actually performed. In the event the Employment and Training Administration withdraws approval of a training program, the Contractor will no longer be permitted to utilize trainees at less than the applicable predetermined rate for the work performed until an acceptable program is approved.

(3) **Equal employment opportunity.** The utilization of apprentices, trainees, and journeymen under this clause shall be in conformity with the equal employment opportunity requirements of Executive Order 11246, as amended, and 29 CFR Part 30.

(e) **Compliance with Copeland Act requirements.** The Contractor shall comply with the requirements of 29 CFR Part 3, which are hereby incorporated by reference in this contract.

(f) **Contract termination; debarment.** A breach of this contract clause may be grounds for termination of the contract and for debarment as a Contractor and a subcontractor as provided in 29 CFR 5.12.

(g) **Compliance with Davis-Bacon and related Act requirements.** All rulings and interpretations of the Davis-Bacon and related Acts contained in 29 CFR Parts 1, 3, and 5 are herein incorporated by reference in this contract.

(h) **Disputes concerning labor standards.** Disputes arising out of the labor standards provisions of this clause shall not be subject to the general disputes clause of this contract. Such disputes shall be resolved in accordance with the procedures of the Department of Labor set forth in 29 CFR Parts 5, 6, and 7. Disputes within the meaning of this clause include disputes between the Contractor (or any of its subcontractors) and the PHA/IHA, HUD, the U.S. Department of Labor, or the employees or their representatives.

(i) **Certification of eligibility.** (1) By entering into this contract, the Contractor certifies that neither it (nor he or she) nor any person or firm who has an interest in the Contractor's firm is a person or firm ineligible to be awarded contracts by the United States Government by virtue of section 3(a) of the Davis-Bacon Act or 29 CFR 5.12(a)(1).

(2) No part of this contract shall be subcontracted to any person or firm ineligible to be awarded contracts by the United States Government by virtue of section 3(a) of the Davis-Bacon Act or 29 CFR 5.12(a)(1).

(3) The penalty for making false statements is prescribed in the U. S. Criminal Code, 18 U.S.C. 1001.

(j) **Contract Work Hours and Safety Standards Act.** As used in this paragraph, the terms "laborers" and "mechanics" include watchmen and guards.

(1) **Overtime requirements.** No contractor or subcontractor contracting for any part of the contract work which may require or involve the employment of laborers or mechanics, including watchmen and guards, shall require or permit any such laborer or mechanic in any workweek in which the individual is employed on such work to work in excess of 40 hours in such workweek unless such laborer or mechanic receives compensation at a rate not less than one and one-half times the basic rate of pay for all hours worked in excess of 40 hours in such workweek.

(2) **Violation; liability for unpaid wages; liquidated damages.** In the event of any violation of the provisions set forth in subparagraph (j)(1) of this clause, the Contractor and any subcontractor responsible therefor shall be liable for the unpaid wages. In addition, such Contractor and subcontractor shall be liable to the United States (in the case of work done under contract for the District of Columbia or a territory, to such District or to such territory), for liquidated damages. Such liquidated damages shall be computed with respect to each individual laborer or mechanic (including watchmen and guards) employed in violation of the provisions set forth in subparagraph (j)(1) of this clause, in the sum of $10 for each calendar day on which such individual was required or permitted to work in excess of the standard workweek of 40 hours without payment of the overtime wages required by provisions set forth in subparagraph (j)(1) of this clause.

(3) **Withholding for unpaid wages and liquidated damages.** HUD or its designee shall upon its own action or upon written request of an authorized representative of the Department of Labor withhold or cause to be withheld, from any moneys payable on account of work performed by the Contractor or subcontractor under any such contract or any Federal contract with the same prime Contractor, or any other Federally-assisted contract subject to the Contract Work Hours and Safety Standards Act, which is held by the same prime Contractor such sums as may be determined to be necessary to satisfy any liabilities of such Contractor or subcontractor for unpaid wages and liquidated damages as provided in the provisions set forth in subparagraph (j)(2) of this clause.

(k) **Subcontracts.** The Contractor or subcontractor shall insert in any subcontracts all the provisions contained in this clause, and

such other clauses as HUD or its designee may by appropriate instructions require, and also a clause requiring the subcontractors to include these provisions in any lower tier subcontracts. The prime Contractor shall be responsible for the compliance by any subcontractor or lower tier subcontractor with all these provisions.

[ ] **48. Labor Standards-Non-routine Maintenance**

(***If checked***, for contracts exceeding $2,000, HUD has determined that the construction covered by this contract consists of non-routine maintenance (as defined in 24 CFR 968.203) necessary for the operation of the Public or Indian Housing project; and the labor standards set forth below and the provisions of Section 12 of the United States Housing Act of 1937 which pertain to such work shall apply. Clause 47 does not apply to this contract.)

(a) **Minimum Wages.** (1) All laborers and mechanics employed or working upon the site of the work will be paid unconditionally and not less often than once a week, and without subsequent deduction or rebate on any account (except such payroll deductions as are permitted by regulations issued by the Secretary of Labor under the Copeland Act (29 CFR Part 3), the full amount of wages due at time of payment computed at rates not less than those contained in the wage determination of the Secretary of Housing and Urban Development which is attached hereto and made a part hereof. Such laborers and mechanics shall be paid the appropriate wage rate on the wage determination for the classification of work actually performed, without regard to skill. Laborers or mechanics performing work in more than one classification may be compensated at the rate specified for each classification for the time actually worked therein; provided, that the employer's payroll records accurately set forth the time spent in each classification in which work is performed. The wage determination shall be posted at all times by the Contractor and its subcontractors at the site of the work in a prominent and accessible place where it can be easily seen by the workers.

(2) (i) Any class of laborers or mechanics which is not listed in the wage determination and which is to be employed under the contract shall be classified in conformance with the wage determination. HUD shall approve an additional classification and wage rate only when the following criteria have been met:

(A) The work to be performed by the classification required is not performed by a classification in the wage determination;

(B) The classification is utilized in the area by the industry; and

(C) The proposed wage rate bears a reasonable relationship to the wage rates contained in the wage determination.

(ii) The wage rate determined pursuant to this paragraph shall be paid to all workers performing work in the classification under this contract from the first day on which work is performed in the classification.

(b) **Withholding of funds.** The Contracting Officer, upon his or her own action or upon request of HUD shall withhold or cause to be withheld from the Contractor under this contract or any other contract subject to HUD-determined wage rates, with the same prime Contractor, so much of the accrued payments or advances as may be considered necessary to pay laborers and mechanics employed by the Contractor or any subcontractor the full amount of wages required by this clause. In the event of failure to pay any laborer or mechanic employed or working on the site of the work all or part of the wages required by the contract, the Contracting Officer or HUD may, after written notice to the Contractor, take such action as may be necessary to cause the suspension of any further payment, or advance, until such violations have ceased. The PHA/IHA or HUD may, after written notice to the Contractor, disburse such amounts withheld for and on account of the Contractor or subcontractor to the respective employees to whom they are due.

(c) **Payrolls and basic records.**

(1) Payrolls and basic records relating thereto shall be maintained by the Contractor during the course of the work and preserved for a period of three years thereafter for all laborers and mechanics working at the site of the work. Such records shall contain the name, address, and social security number of each such worker, his or her correct classification, hourly rates of wages paid, daily and weekly number of hours worked, deductions made, and actual wages paid.

(2) (i) The Contractor shall submit weekly for each week in which any contract work is performed a copy of all payrolls to the Contracting Officer. The payrolls submitted shall set out accurately and completely all of the information required to be maintained under subparagraph (d)(1) above. This information may be submitted in any form desired. Optional Form WH-347 (Federal Stock Number 029-005-00014-1) is available for this purpose and may be purchased from the Superintendent of Documents, U.S. Government Printing Office, Washington, D.C. 20402. The prime Contractor is responsible for the submission of copies of payrolls by all subcontractors. (Approved by the OMB under OMB control number 1215-0149).

(ii) Each payroll submitted shall be accompanied by a "Statement of Compliance," signed by the Contractor or subcontractor or his or her agent who pays or supervises the payment of the persons employed under the contract and shall certify the following:

(A) that the payroll for the payroll period contains the information required to be maintained under subparagraph (c)(1) of this clause and that such information is correct and complete;

(B) that each laborer or mechanic employed on the contract during the payroll period has been paid the full weekly wages earned, without rebate, either directly or indirectly, and that no deductions have been made either directly or indirectly from the full wages earned, other than permissible deductions as set forth in 29 CFR Part 3; and

(C) that each laborer or mechanic has been paid not less than the applicable wage rates for the classification of work performed, as specified in the applicable wage determination incorporated into the contract.

(iii) The weekly submission of a properly executed certification set forth on the reverse side of Optional Form WH-347 shall satisfy the requirements for submission of the "Statement of compliance" required by subparagraph (c)(2)(ii) of this clause.

(iv) The falsification of any of the above certifications may subject the Contractor or subcontractor to civil or criminal prosecution under Section 1001 of Title 18 and Section 3729 of Title 31 of the United States Code.

(3) The Contractor or subcontractor shall make the records required under subparagraph (c)(1) available for inspection, copying, or transcription by authorized representatives of HUD or the PHA/IHA and shall permit such representatives to interview employees during working hours on the job. If the Contractor or subcontractor fails to submit the required records or to make them available, HUD or its designee may, after written notice to the Contractor, take such action as may be necessary to cause the suspension of any further payment, advance, or guarantee of funds. Furthermore, failure to submit the required records upon request or to make such records available may be grounds for debarment or denial of participation in HUD's programs pursuant to 24 CFR Part 24.

(d) **Compliance with Copeland Act requirements.** The Contractor shall comply with the requirements of 29 CFR Part 3 which are incorporated by reference in this contract.

(e) **Contract termination; debarment.** A breach of this contract clause may be grounds for termination of the contract and for debarment as a Contractor and a subcontractor as provided in 24 CFR Part 24.

(f) **Disputes concerning labor standards.**

(1) Disputes arising out of the labor standards provisions of paragraphs (a), (b), (c), and (e) of this clause shall be subject to the general disputes clause of this contract.

(2) Disputes arising out of the labor standards provisions of paragraphs (d), and (g) of this clause shall not be subject to the general disputes clause of this contract. Such disputes shall be resolved in accordance with the procedures of the Department of Labor set forth in 29 CFR Parts 5, 6, and 7. Disputes within the meaning of this paragraph (f)(2) include disputes between the Contractor (or any of its subcontractors) and the PHA/IHA, HUD, the U.S. Department of Labor, or the employees or their representatives.

(g) **Contract Work Hours and Safety Standards Act.** As used in this paragraph, the terms "laborers" and "mechanics" include watchmen and guards.

(1) **Overtime requirements.** No contractor or subcontractor contracting for any part of the contract work which may require or involve the employment of laborers or mechanics shall require or permit any such laborer or mechanic in any workweek in which the individual is employed on such work to work in excess of 40 hours in such workweek unless such laborer or mechanic receives compensation at a rate not less than one and one-half times the basic rate of pay for all hours worked in excess of 40 hours in such workweek.

(2) **Violation; liability for unpaid wages; liquidated damages.** In the event of any violation of the provisions set forth in subparagraph (g)(1) of this clause, the Contractor and any subcontractor responsible therefor shall be liable for the unpaid wages. In addition, such Contractor and subcontractor shall be liable to the United States (in the case of work done under contract for the District of Columbia or a territory, to such District or to such territory), for liquidated damages. Such liquidated damages shall be computed with respect to each individual laborer or mechanic, including watchmen and guards, employed in violation of the provisions set forth in subparagraph (g)(1) of this clause, in the sum of $10 for each calendar day on which such individual was required or permitted to work in excess of the standard workweek of 40 hours without payment of the overtime wages required by provisions set forth in subparagraph (g)(1) of this clause.

(3) **Withholding for unpaid wages and liquidated damages.** HUD or its designee shall upon its own action or upon written request of an authorized representative of the Department of Labor withhold or cause to be withheld, from any moneys payable on account of work performed by the Contractor or subcontractor under any such contract or any federal contract with the same prime Contractor, or any other federally-assisted contract subject to the Contract Work Hours and Safety Standards Act, which is held by the same prime Contractor such sums as may be determined to be necessary to satisfy any liabilities of such Contractor or subcontractor for unpaid wages and liquidated damages as provided in the provisions set forth in subparagraph (g)(2) of this clause.

(h) **Subcontracts.** The Contractor or subcontractor shall insert in any subcontracts all the provisions contained in this clause and also a clause requiring the subcontractors to include these provisions in any lower tier subcontracts. The prime Contractor shall be responsible for the compliance by any subcontractor or lower tier subcontractor with all the provisions contained in this clause.

49. Non-Federal Prevailing Wage Rates

Any prevailing wage rate (including basic hourly rate and any fringe benefits), determined under State or tribal law to be prevailing, with respect to any employee in any trade or position employed under the contract, is inapplicable to the contract and shall not be enforced against the Contractor or any subcontractor, with respect to employees engaged under the contract whenever either of the following occurs:

(1) Such non-Federal prevailing wage rate exceeds: (A) the applicable wage rate determined by the Secretary of Labor pursuant to the Davis-Bacon Act (40 U.S.C. 276a et seq) to be prevailing in the locality with respect to such trade; (B) an applicable apprentice wage rate based thereon specified in an apprenticeship program registered with the U.S. Department of Labor or a DOL-recognized State Apprenticeship Agency; or (C) an applicable trainee wage rate based thereon specified in a DOL-certified trainee program; or

(2) Such non-Federal prevailing wage rate, exclusive of any fringe benefits, exceeds the applicable wage rate determined by the Secretary of HUD to be prevailing in the locality with respect to such trade or position.

[FR Doc. 96–18923 Filed 7–24–96; 8:45 am]
BILLING CODE 4210–33–M

DEPARTMENT OF THE INTERIOR

Bureau of Land Management

[WO–320–6–1990–01]

Information Collection Submitted to the Office of Management and Budget for Review Under the Paperwork Reduction Act (44 U.S.C. Chapter 35)

The proposal for the collection of information listed below has been submitted to the Office of Management and Budget for approval under the provisions of the Paperwork Reduction Act, *as amended* (44 U.S.C. Chapter 35). Copies of the proposed collection of information and explanatory material may be obtained by contacting the BLM's Clearance Officer at the telephone number listed below. Comments and suggestions on the proposal should be made within 30 days directly to the Bureau Clearance Officer and to the Office of management and Budget, Paperwork Reduction Project (1004–0114), Washington, D.C. 20503, telephone 202–395–7340.

Title: Recordation of Location Notices and Annual Filings for Mining Claims, Mill Sites, and Tunnel Sites; Payment of Location and Maintenance Fees and Service Charges.

OMB Approval Number: 1004–0114.

Abstract: The information collected is used to determine whether or not mining claimants have met the statutory requirements of Section 314 of the Federal Land Policy and Management Act of 1976 (43 U.S.C. 1744), the Mining Claim Rights Restoration Act of 1955 (30 U.S.C. 621 *et seq.*), the Oregon and California Railroad and Reconveyed Coos Bay Wagon Road Grant Lands Act of 1948 (hereinafter called ''the O and C Lands Act'', Pub. L. 80–477, 62 STAT 162), the General Mining Law of 1872 (30 U.S.C. 22–54), the Act of August 10, 1993 (Pub. L. 103–66; 30 U.S.C. 28f–k), and the Act of April 16, 1993 (Pub. L. 103–23; 43 U.S.C. 299[b]). Mining claimants must record location notices of mining claims, mill sites, and tunnel sites with the Bureau of Land Management (BLM) within 90 days of their location. Each calendar year after the claims and sites are located, the claimants must make an annual filing by December 30. Failure to record the mining claim or site or to submit an annual filing makes the mining claim or site abandoned and void by operation of law. Enactment of Pub. L. 103–66 of August 10, 1993 (107 STAT 405; 30 U.S.C. 28[f]–[k]) requires payment of a $100 per claim or site maintenance fee for fiscal years 1994 through 1998. The payment is due at the time of recording and by each following August 31 thereafter. The Act also requires a $25 location fee for all new claims or sites located, payable at the time of recording with BLM. Certain ''small miners'' owning 10 or fewer claims and sites in total may file by each August 31 a waiver from payment of the maintenance fee and file an annual filing as in the past. Failure to pay the fee or file for a waiver by August 31 makes the mining claim or site forfeited by operation of law. Pub. L. 103–66 expires on September 30, 1998 unless renewed by Congress. Enactment of Pub. L. 103–23 of April 16, 1993 (107 STAT 60; 43 U.S.C. 299[b]) establishes new procedures for location of mining claims upon the reserved mineral estate of the United States where the mineral estate was reserved under the authority of the Stockraising Homestead Act of 1916, *as amended*. The locator must now file a Notice of Intent to Locate Mining Claims (NOITL) with BLM and serve a copy of the NOITL upon the surface owner of record, as taken from the local tax records. The locator must wait 30 days after serving the surface owner before entering the lands or locating mining claims upon the lands so noticed. The notice segregates the lands from mineral entry or mineral sale on behalf of the locator for 90 days from acceptance by BLM. BLM is required to post the NOITL upon its official land records. The surface owner is not subject to filing a NOITL and may locate mining claims at any time the mineral estate is not segregated.

Bureau Form Numbers: 3814–4 and 3830–2.

Frequency: Once for notices and certificates of location, NOITL, and payment of location fees. Once each year for annual filings, payment of maintenance fees or filing of waivers.

Description of Respondents: Respondents may range from an individual to multi-national corporations.

Estimated Completion Time: 0.1333 hours for each document or payment.

Annual Responses: 359,000.

Bureau Clearance Officer: Wendy Spencer (303)–236–6642.

Dated: July 18, 1996.

Annetta L. Cheek,

Chief, Regulatory Management Team.

[FR Doc. 96–18864 Filed 7–24–96; 8:45 am]

BILLING CODE 4310–84–P

[WY–010–1820–00]

Environmental Impact Statement (FEIS) for the Grass Creek Planning Area Resource Management

AGENCY: Bureau of Land Management, Interior.

ACTION: Notice of Availability of the Final Environmental Impact Statement (FEIS) for the Grass Creek Planning Area Resource Management Plan (RMP) for public review and comment.

SUMMARY: The FEIS for the Grass Creek Planning Area RMP describes and analyzes four alternative resource management plans, including the proposed RMP, for managing the BLM-administered public lands and Federal mineral estate in the Grass Creek Planning Area of the Bighorn Basin Resource Area. The planning area includes portions of Big Horn, Hot Springs, Park, and Washakie counties in the Bighorn Basin of north central Wyoming.

The Draft EIS (DEIS) for the Grass Creek Planning Area RMP was made available for public review and comment in January 1995. Comments received on the DEIS were considered in preparing the proposed RMP and FEIS. When completed, the Grass Creek Planning Area RMP will provide the management direction for future land and resource management actions on approximately 968,000 acres of public land surface and approximately 1,171,000 acres of Federal mineral estate administered by the BLM. The FEIS focuses on the proposed RMP alternative and BLM's responses to public comments on the DEIS. The FEIS also describes the other alternatives and their environmental consequences which were considered in the DEIS, therefore, it will not be necessary to have the DEIS to conduct a complete review of the FEIS.

The proposed Grass Creek Planning Area RMP is a comprehensive land-use and resource management plan. It was developed by making adjustments to the Preferred Alternative presented in the DEIS. In addition, the planning team has revised some of the analysis in the DEIS and included new information, based on public comments. However, the environmental consequences of the proposed RMP are not substantially different from those of the Preferred Alternative.

The following are changes to the management actions in the Preferred Alternative of the DEIS.

—Motorized vehicle use in the Badlands Proposed Special Recreation Management Area would be limited to

''existing'' roads and trails rather than ''designated'' roads and trails.

—The Red Canyon Creek area would not be designated a special recreation management area.

—With a new management objective, the BLM would attempt to maintain the current opportunities for ''semi-primitive'' non-motorized recreation in the planning area.

—The Fifteenmile Wild Horse Herd Management Area would not be expanded, although the existing herd area would be retained.

—The Fifteenmile Creek Watershed and Meeteetse Draw areas would not be proposed for designation as areas of critical environmental concern (ACECs).

—Public lands immediately north of the South Fork of Owl Creek (for a distance of about 13 miles along the stream starting at Rock Creek) would be added to the Upper Owl Creek proposed ACEC. The entire proposed ACEC would be closed to mining claim location and development and to other surface-disturbing activities.

The following are modified analyses, new material, and clarifications:

—An expanded cultural resources section describes traditional values (custom and culture) associated with Native American beliefs, ranching, recreation, and oil and gas development.

—The anticipated use of prescribed fire has been increased from 9,000 to 11,000 acres.

—The anticipated levels of exploratory drilling have been varied by 50 percent in two alternatives to provide a better comparison of economic impacts.

—Fiscal contributions of the oil and gas industry, consisting of royalties and taxes, have been quantified.

—Recreation use estimates have been revised downward to reflect an annual growth of about 1 percent.

—New information describes cooperative efforts to control noxious weeds.

—New information describes wildlife seasonal habitat and habitat fragmentation.

—The glossary and references sections have been updated and expanded.

—The livestock grazing appendix has been revised.

—Appendixes on economics and mitigation measures have been added.

DATES: Protests on the proposed Grass Creek Planning Area RMP must be postmarked no later than 30 days following the date the Environmental Protection Agency's (EPA) Notice of Availability (NOA) of the FEIS is published in the Federal Register. The FEIS is scheduled to be mailed to the public on or about July 24, 1996, and the EPA NOA is anticipated to be published on either August 2, 1996, or August 9, 1996.

ADDRESSES: Protests on the proposed Grass Creek Planning Area RMP should be sent to the Bureau of Land Management, Director (480), Resource Planning Team, MS 314 LS, 1849 C Street N.W., Washington, D.C., 20240.

FOR FURTHER INFORMATION CONTACT: Joe Vessels, Assistant Area Manager, Bighorn Basin Resource Area at 307–347–5297 or Bob Ross, RMP Team Leader at 307–347–5178. Copies of the FEIS are available from the BLM Worland District Office at P. O. Box 119, 101 South 23rd Street, Worland, Wyoming 82401–0119.

SUPPLEMENTARY INFORMATION: The Upper Owl Creek proposed ACEC would be managed to maintain important wildlife habitat, protect rare plants, maintain scenic quality, enhance recreation, protect an important groundwater recharge area, and reduce erosion and natural hazards associated with the area's landslide potential. The special management designation would not apply to State or private lands.

The coal screening process (including application of the coal unsuitability criteria under 43 CFR Part 3461) was not conducted for the planning effort. Any interest in coal exploration or leasing will be handled on a case-by-case basis. If an application for a coal lease is received sometime in the future, an appropriate land use environmental analysis will be conducted (which will include conducting the coal screening process), to determine whether or not the coal areas applied for are acceptable for development and leasing consideration. The RMP will be amended as necessary.

Wilderness management and recommendations on wilderness designation are not addressed in the FEIS. Wilderness management, related to four wilderness study areas in the Grass Creek Planning Area (formerly the Grass Creek Resource Area), is addressed in the Grass Creek/Cody Wilderness EIS published in August 1990. Pending a decision by Congress on designation of these areas, the Owl Creek, Bobcat Draw Badlands, Sheep Mountain, and Red Butte Wilderness Study Areas will be managed under the BLM's ''Interim Management Policy and Guidelines for Lands Under Wilderness Review.''

Dated: July 17, 1996.

James K. Murkin,

Acting State Director.

[FR Doc. 96–18890 Filed 7–24–96; 8:45 am]

BILLING CODE 4310–22–P

[MT–920–1430–01; MTM 82056]

Public Land Order No. 7208; Withdrawal of National Forest System Land for the Snowbird Mine; Montana

AGENCY: Bureau of Land Management, Interior.

ACTION: Public land order.

SUMMARY: This order withdraws 37.50 acres of National Forest System land from location and entry under the United States mining laws for a period of 50 years for the Department of Agriculture, Forest Service, to protect the recreational opportunities and mineral resources of the Snowbird Mine area. The land has been and will remain open to such forms of disposition as may by law be made of National Forest System land and to mineral leasing.

EFFECTIVE DATE: July 25, 1996.

FOR FURTHER INFORMATION CONTACT: Sandra Ward, BLM, Montana State Office, P.O. Box 36800, Billings, Montana 59107, 406–255–2949.

By virtue of the authority vested in the Secretary of the Interior by Section 204 of the Federal Land Policy and Management Act of 1976, 43 U.S.C. 1714 (1988), it is ordered as follows:

1. Subject to valid existing rights, the following described National Forest System land is hereby withdrawn from location and entry under the United States mining laws (30 U.S.C. Ch. 2 (1988)), but not from leasing under the mineral leasing laws, to protect the significant recreational opportunities and mineral resources of the Snowbird Mine area:

Principle Meridian, Montana

Lolo National Forest

T. 12 N., R. 25 W.,
Sec. 19, S½S½NE¼SW¼, N½SE¼SW¼, N½SW¼SE¼SW¼, and NE¼SE¼SE¼SW¼.

The area described contains 37.50 acres in Mineral County.

2. The withdrawal made by this order does not alter the applicability of those public land laws governing the use of the National Forest System land under lease, license, or permit, or governing the disposal of their mineral or vegetative resources other than under the mining laws.

3. This withdrawal will expire 50 years from the effective date of this order unless, as a result of a review

conducted before the expiration date pursuant to Section 204(f) of the Federal Land Policy and Management Act of 1976, 43 U.S.C. 1714(f) (1988), the Secretary determines that the withdrawal shall be extended.

Dated: July 15, 1996.

Bob Armstrong,

Assistant Secretary of the Interior.

[FR Doc. 96–18949 Filed 7–24–96; 8:45 am]

BILLING CODE 4310–DN–P

[MT–924–1430–01; MTM 022671]

Public Land Order No. 7207; Revocation of Bureau Order Dated March 25, 1957; Montana

AGENCY: Bureau of Land Management, Interior.

ACTION: Public land order.

SUMMARY: This order revokes in its entirety a Bureau order insofar as it affects 24,320 acres of National Forest System lands withdrawn for the proposed Bureau of Reclamation's Spruce Park Reservoir of the Flathead River Project. The lands are no longer needed for the purpose for which they were withdrawn. All the lands will continue to be withdrawn as part of the Great Bear Wilderness Area and a portion of the lands will continue to be withdrawn for the Flathead Wild River Corridor. This action is for record-clearing purposes only.

EFFECTIVE DATE: July 25, 1996.

FOR FURTHER INFORMATION CONTACT: Sandra Ward, BLM Montana State Office, P.O. Box 36800, Billings, Montana 59107, 406–255–2949.

By virtue of the authority vested in the Secretary of the Interior by Section 204 of the Federal Land Policy and Management Act of 1976, 43 U.S.C. 1714 (1988), it is ordered as follows:

1. The Bureau Order dated March 25, 1957, which withdrew lands for the Spruce Park Reservoir in Flathead County, is hereby revoked in its entirety:

Principal Meridian, Montana

T. 27 N., R. 14 W.,
Secs. 3 to 6, inclusive, secs. 9 and 10.
T. 28 N., R. 14 W.,
Secs. 30 to 33, inclusive.
T. 27 N., R. 15 W.,
Sec. 2, secs. 4 to 9, inclusive, and sec. 16.
T. 28 N., R. 15 W.,
Secs. 18, 19, and 20, and secs. 25 to 36, inclusive.
T. 28 N., R. 16 W.,
Secs. 13, 24, 25, 35, and 36.

The areas described aggregate approximately 24,320 acres in Flathead County.

2. These lands will continue to be withdrawn as part of the Great Bear Wilderness Area pursuant to the Wilderness Act of 1964 (16 U.S.C. 1131 (1988)) and Public Law 95–547 (16 U.S.C. 1132 (1988)) and as part of the Flathead Wild River Corridor pursuant to Public Law 94–486 (16 U.S.C. 1274 (1988)), and will continue to be subject to the terms and conditions of any other withdrawal or segregation of record.

Dated: July 15, 1996.

Bob Armstrong,

Assistant Secretary of the Interior.

[FR Doc. 96–18950 Filed 7–24–96; 8:45 am]

BILLING CODE 4310–DN–P

[NM–018–1430–01; 1430–01; NMNM 91323]

Public Land Order No. 7210; Withdrawal of Public Land for the Racecourse and Agua Caliente Areas of Critical Environmental Concern; New Mexico

AGENCY: Bureau of Land Management, Interior.

ACTION: Public Land Order.

SUMMARY: This order withdraws 4,409.18 acres of public land from surface entry and mining for a period of 50 years, for the Bureau of Land Management to protect the recreational, visual, and wildlife resources of the Racecourse and Agua Caliente Areas of Critical Environmental Concern. The land has been and will remain open to mineral leasing.

EFFECTIVE DATE: July 25, 1996.

FOR FURTHER INFORMATION CONTACT: Chet Grandjean, BLM Taos Resource Area, 226 Cruz Alta Road, Taos, New Mexico 87571, 505–758–8851.

By virtue of the authority vested in the Secretary of the Interior by Section 204 of the Federal Land Policy and Management Act of 1976, 43 U.S.C. 1714 (1988), it is ordered as follows:

1. Subject to valid existing rights, the following described public land is hereby withdrawn from settlement, sale, location, or entry under the general land laws, including the United States mining laws, (30 U.S.C. Ch. 2 (1988)), but not from leasing under the mineral leasing laws, to protect the Bureau of Land Management's Racecourse and Agua Caliente Areas of Critical Environmental Concern:

New Mexico Principal Meridian

T. 23 N., R. 10 E.,
Sec. 1, lots 1 and 2, S½NE¼, and N½SE¼;
Sec. 11, lots 5 and 6, and SW¼SW¼;
Sec. 12, lots 8 to 15, inclusive, SE¼NE¼, N½NW¼, S½SW¼, N½SE¼, and SW¼SE¼;
Sec. 13, NW¼NW¼;
Sec. 14, lots 1 to 3, inclusive, NE¼NE¼, SW¼NE¼, SE¼NW¼, SW¼SW¼, and N½SW¼;
Sec. 15, lots 1, 2, 3, and 5, NW¼NE¼, NE¼SE¼, and S½SE¼.
T. 23 N., R. 11 E.,
Sec. 3, lots 1 to 4, inclusive, S½N½, and S½;
Sec. 4, lots 1 to 4, inclusive, and S½N½;
Sec. 5, lots 1 to 4, inclusive, and S½N½;
Sec. 6, lots 1 to 11, inclusive, SE¼NE¼, SE¼SW¼, N½SE¼, and SW¼SE¼;
Sec. 7, SW¼NW¼, and N½NW¼.
T. 24 N., 11 E.,
Sec. 31, S½;
Sec. 32, NW¼SW¼, and SE¼SE¼;
Sec. 33, lots 5 to 7, inclusive, S½SW¼, NE½SE¼, and S½SE¼;
Sec. 34, SW¼.

The area described contains 4,409.18 acres in Taos and Rio Arriba Counties.

2. The withdrawal made by this order does not alter the applicability of those public land laws governing the use of the land under lease, license, or permit, or governing the disposal of its mineral or vegetative resources other than under the mining laws.

3. This withdrawal will expire 50 years from the effective date of this order unless, as a result of a review conducted before the expiration date pursuant to Section 204(f) of the Federal Land Policy and Management Act of 1976, 43 U.S.C. 1714(f) (1988), the Secretary determines that the withdrawal shall be extended.

Dated: July 15, 1996.

Bob Armstrong,

Assistant Secretary of the Interior.

[FR Doc. 96–18880 Filed 7–24–96; 8:45 am]

BILLING CODE 4310–FB–P

[OR–958–0777–54; GP6–0073; OR–50699 (WA)]

Public Land Order No. 7209; Withdrawal of Public Land for Cape Johnson; Washington

AGENCY: Bureau of Land Management, Interior.

ACTION: Public Land Order.

SUMMARY: This order withdraws 3.25 acres of public land from surface entry, mining, and mineral leasing for a period of 20 years for the National Park Service to protect the fragile, unique, and endangered resources at Cape Johnson.

EFFECTIVE DATE: July 25, 1996.

FOR FURTHER INFORMATION CONTACT: Betty McCarthy, BLM Oregon/Washington State Office, P.O. Box 2965, Portland, Oregon 97208–2965, 503–952–6155.

By virtue of the authority vested in the Secretary of the Interior by Section

204 of the Federal Land Policy and Management Act of 1976, 43 U.S.C. 1714 (1988), it is ordered as follows:

1. Subject to valid existing rights, the following described public land is hereby withdrawn from settlement, sale, location, or entry under the general land laws, including the United States mining laws (30 U.S.C. Ch. 2 (1988)), and leasing under the mineral leasing laws, to protect the natural resources at Cape Johnson:

Willamette Meridian

T. 28 N., R. 15 W.,
Sec. 6, lot 1.

The area described contains 3.25 acres in Clallam County.

2. Use and management of the area will be based on preservation and protection of the property's natural and cultural resources. Land uses authorized during the segregation period include only those activities consistent with the surrounding Olympic National Park designated wilderness. Main use of the property will be for dispersed non-motorized recreation, outdoor education, resource research, and interpretation. Uses such as biological or cultural research may be permitted upon proper authorization.

3. This withdrawal will expire 20 years from the effective date of this order unless, as a result of a review conducted before the expiration date pursuant to Section 204(f) of the Federal Land Policy and Management Act of 1976, 43 U.S.C. 1714(f) (1988), the Secretary determines the withdrawal shall be extended.

Dated: July 15, 1996.

Bob Armstrong,

Assistant Secretary of the Interior.

[FR Doc. 96–18881 Filed 7–24–96; 8:45 am]

BILLING CODE 4310–33–P

Geological Survey

Federal GeoGRAPHICS Data Committee (FGDC); Public Meeting of the FGDC Facilities Working Group

AGENCY: U.S. Geological Survey, Interior.

ACTION: Notice of meeting.

SUMMARY: This notice is to invite public participation in a meeting of the FGDC Facilities Working Group. The major topics for this meeting are: development of a Facility/Installation ID standard; development of a utility data content standard; and development of an environmental hazard data content standard.

TIME AND PLACE: 9 September 1996, from 1:00 p.m. until 4:00 p.m. The meeting will be held at Headquarters U.S. Army Corps of Engineers, in Room 8222D of the Pulaski Building, 20 Massachusetts Avenue, NW., Washington, DC. The Pulaski building is located just a few blocks west of Union Station.

FOR FURTHER INFORMATION CONTACT: Jennifer Fox, FGDC Secretariat, U.S. Geological Survey, 590 National Center, 12201 Sunrise Valley Drive, Reston, Virginia 20192; telephone (703) 648–5514; facsimile (703) 648–5755; Internet ''gdc@usgs.gov''. Minutes of meetings are available by clicking on the Facilities Working Group at the FGDC Internet address http:fgdc.er.usgs.gov

SUPPLEMENTARY INFORMATION: The FGDC is a committee of Federal Agencies engaged in geospatial activities. The FGDC Facilities Working Group specifically focuses on geospatial data issues related to facilities and facility management. A facility is an entity with location, deliberately established as a site for designated activities. A facility database might describe a factory, a military base, a college, a hospital, a power plant, a fishery, a national park, an office building, a space command center, or a prison. The database for a complex facility may describe multiple functions or missions, multiple buildings, or even a county, town, or city. The objectives of the Working Group are to: Promote standards of accuracy and currentness in facilities data that are financed in whole or in part by Federal funds; exchange information on technological improvements for collecting facilities data; encourage the Federal and non-Federal communities to identify and adopt standards and specifications for facilities data; and promote the sharing of facilities data among Federal and non-Federal organizations.

Date: July 18, 1996.

Richard E. Witmer,

Acting Chief, National Mapping Division.

[FR Doc. 96–18879 Filed 7–24–96; 8:45 am]

BILLING CODE 4310–31–M

Minerals Management Service

Electronic Data Interchange in the Royalty Management Program

AGENCY: Minerals Management Service, Interior.

ACTION: Notice of an EDI Presentation.

SUMMARY: The Minerals Management Service (MMS) is giving an Electronic Data Interchange (EDI) presentation in San Antonio, Texas, on September 26, 1996.

FOR FURTHER INFORMATION CONTACT: Ms. Barbara Y. Matthews, Systems Management Division, Minerals Management Service, Royalty Management Program, P. O. Box 25165, MS 3140, Denver, Colorado, 80225–0165, telephone numbers (800) 619–4593, (303) 275–7036, fax number (303) 275–7099 or e-mail Barbara____Matthews@smtp.mms.gov.

DATES: The EDI presentation is Thursday, September 26, 1996.

LOCATION: San Antonio Marriott Rivercenter Hotel, 101 Bowie Street, San Antonio, Texas 78205, telephone Number: (210) 223–1000.

The Marriott Rivercenter Hotel is located at the intersection of Bowie and Commerce Streets, adjacent to the River Center Mall.

SUPPLEMENTARY INFORMATION: MMS is offering an EDI presentation at no cost to companies and interested parties that intend to implement or pilot EDI with MMS. The EDI presentation will be held in conjunction with the American Petroleum Institute (API), Petroleum Industry Data Exchange (PIDX) REGS Work Group meeting in San Antonio, Texas. The API PIDX REGS Work Group meeting is scheduled for September 23 through 26, 1996.

Instructors are MMS employees of the Royalty Management Program, Systems Management Division.

Agenda

Morning Session: 9:00 a.m.–11:30 a.m.
Subject: MMS EDI activities, capabilities, current status and implementation planning and schedules.

Afternoon Session: 1:00 p.m.–4:00 p.m.
Subject: EDI technical issues related to mapping and electronic exchange of regulatory data, and funds transmittal with MMS via EDI.

All EDI Presentation attendees will be provided copies of the current MMS EDI Implementation Guides.

If you are planning to attend this EDI Presentation, please leave a message for Barbara Matthews at the telephone and FAX numbers or the e:mail address in the information contact section of this notice no later than September 6, 1996.

Dated: July 19, 1996.

James W. Shaw,

Associate Director for Royalty Management.

[FR Doc. 96–18892 Filed 7–24–96; 8:45 am]

BILLING CODE 4310–MR–P

National Park Service

Maine Acadian Culture Preservation Commission; Notice of Meeting

Notice is hereby given in accordance with the Federal Advisory Committee Act (PL 92–463) that the Maine Acadian

Culture Preservation Commission will meet on Thursday, August 15, 1996. The meeting will convene at 7:00 P.M. at the Acadian Village, U.S. Route 1, Van Buren, Aroostook County, Maine.

The Maine Acadian Culture Preservation Commission was appointed by the Secretary of the Interior pursuant to the Maine Acadian Culture Preservation Act (PL 101–543). The purpose of the Commission is to advise the National Park Service with respect to:

- The development and implementation of an interpretive program of Acadian culture in the state of Maine; and
- The selection of sites for interpretation and preservation by means of cooperative agreements.

The Agenda for this meeting is as follows:

1. Review and approval of the summary report of the meeting held June 28, 1996.
2. Reports of Maine Acadian Culture Preservation Commission working groups.
3. Report of the National Park Service project staff.
4. Opportunity for public comment.
5. Proposed agenda, place, and date of the next Commission meeting.

The meeting is open to the public. Further information concerning Commission meetings may be obtained from the Superintendent, Acadia National Park. Interested persons may make oral/written presentations to the Commission or file written statements. Such requests should be made at least seven days prior to the meeting to: Superintendent, Acadia National Park, P.O. Box 177, Bar Harbor, ME 04609–0177; telephone (207) 288–5472.

Dated: July 15, 1996.

Len Bobinchock,

Acting Superintendent, Acadia National Park.

[FR Doc. 96–18956 Filed 7–24–96; 8:45 am]

BILLING CODE 4310–70–P

INTERNATIONAL DEVELOPMENT COOPERATION AGENCY

Agency for International Development

Advisory Committee on Voluntary Foreign Aid; Notice of Meeting

Pursuant to the Federal Advisory Committee Act, notice is hereby given of a meeting of the Advisory Committee on Voluntary Foreign Aid (ACVFA).

Date: September 10, 1996 (9:00 a.m. to 5:00 p.m.).

Location: State Department, Loy Henderson Auditorium, 23rd Street Entrance.

The purpose of the meeting is to discuss and provide nongovernmental input on: the role of foreign assistance in U.S. foreign policy.

The meeting is free and open to the public. HOWEVER, NOTIFICATION BY SEPTEMBER 6, 1996, THROUGH THE ADVISORY COMMITTEE HEADQUARTERS IS REQUIRED. Persons wishing to attend the meeting must call Lisa J. Douglas (703) 351–0243 or Susan Saragi (703) 351–0244 or FAX (703) 351–0228/0212. Persons attending must include their name, organization, birthdate and social security number for security purposes.

Dated: July 11, 1996.

Adele Liskov,

Deputy Director, Office of Private and Voluntary Cooperation, Bureau for Humanitarian Response.

[FR Doc. 96–18885 Filed 7–24–96; 8:45 am]

BILLING CODE 6116–01–M

DEPARTMENT OF LABOR

Mine Safety and Health Administration

Petitions for Modification

The following parties have filed petitions to modify the application of mandatory safety standards under section 101(c) of the Federal Mine Safety and Health Act of 1977.

1. Pilgrim Mining Company, Inc.

[Docket No. M–96–47–C]

Pilgrim Mining Company, Inc., P.O. Box 2046, Inez, Kentucky 41224 has filed a petition to modify the application of 30 CFR 75.901 (protection of low- and medium-voltage three-phase circuits used underground) to its Voyager Mine Number Two (I.D. No. 15–17639) located in Martin County, Kentucky. The petitioner requests a modification of the standard to allow the use of a 150 K W Diesel Generator Set, Serial Number 94–E5913. The petitioner has outlined in this petition specific terms, conditions, and safety procedures that would be followed when using the diesel generator system. The petitioner asserts that the proposed alternative method would provide at least the same measure of protection as would the mandatory standard.

2. Pilgrim Mining Company, Inc.

[Docket No. M–96–48–C]

Pilgrim Mining Company, Inc., P.O. Box 2046, Inez, Kentucky 41224 has filed a petition to modify the application of 30 CFR 75.901 (protection of low- and medium-voltage three-phase circuits used underground) to its Pilgrim Mine Number Three (I.D. No. 15–17359) located in Martin County, Kentucky. The petitioner requests a modification of the standard to allow the use of a 100 K W Diesel Generator Set, Serial Number 90–E5260. The petitioner has outlined in this petition specific terms, conditions, and safety procedures that would be followed when using the diesel generator system. The petitioner asserts that the proposed alternative method would provide at least the same measure of protection as would the mandatory standard.

3. Martin County Coal Corporation

[Docket No. M–96–49–C]

Martin County Coal Corporation, P.O. Box 5002, Inez, Kentucky 41224 has filed a petition to modify the application of 30 CFR 75.901 (protection of low- and medium-voltage three-phase circuits used underground) to its Pegasus Mine (I.D. No. 15- 17330) located in Martin County, Kentucky. The petitioner requests a modification of the standard to allow the use of a 150 K W Diesel Generator Set, Serial Number 94–E5913. The petitioner has outlined in this petition specific terms, conditions, and safety procedures that would be followed when using the diesel generator system. The petitioner asserts that the proposed alternative method would provide at least the same measure of protection as would the mandatory standard.

4. Martin County Coal Corporation

[Docket No. M–96–50–C]

Martin County Coal Corporation, P.O. Box 5002, Inez, Kentucky 41224 has filed a petition to modify the application of 30 CFR 75.901 (protection of low- and medium-voltage three-phase circuits used underground) to its 1–C Mine (I.D. No. 15–03752) located in Martin County, Kentucky. The petitioner requests a modification of the standard to allow the use of a 150 K W Diesel Generator Set, Serial Number 94–E5913. The petitioner has outlined in this petition specific terms, conditions, and safety procedures that would be followed when using the diesel generator system. The petitioner asserts that the proposed alternative method would provide at least the same measure of protection as would the mandatory standard.

5. Martin County Coal Corporation

[Docket No. M–96–51–C]

Martin County Coal Corporation, P.O. Box 5002, Inez, Kentucky 41224 has filed a petition to modify the application of 30 CFR 75.901 (protection of low- and medium-voltage three-phase circuits used underground) to its White Cabin Mine Number One (I.D. No. 15–17531) located in Martin County,

Kentucky. The petitioner requests a modification of the standard to allow the use of a 150 K W Diesel Generator Set, Serial Number 94–E5913. The petitioner has outlined in this petition specific terms, conditions, and safety procedures that would be followed when using the diesel generator system. The petitioner asserts that the proposed alternative method would provide at least the same measure of protection as would the mandatory standard.

6. Martin County Coal Corporation

[Docket No. M–96–52–C]

Martin County Coal Corporation, P.O. Box 5002, Inez, Kentucky has filed a petition to modify the application of 30 CFR 75.701 (grounding metallic frames, casings, and other enclosures of electric equipment) to its Pegasus Mine (I.D. No. 15–17330) located in Martin County, Kentucky. The petitioner requests a modification of the standard to allow the use of a 100 K W Diesel Generator Set, Serial Number 90–E5260. The petitioner has outlined in this petition specific terms, conditions, and safety procedures that would be followed when using the diesel generator system. The petitioner asserts that the proposed alternative method would provide at least the same measure of protection as would the mandatory standard.

7. Martin County Coal Corporation

[Docket No. M–96–53–C]

Martin County Coal Corporation, P.O. Box 5002, Inez, Kentucky 41224 has filed a petition to modify the application of 30 CFR 75.701 (grounding metallic frames, casings, and other enclosures of electric equipment) to its White Cabin Mine Number One (I.D. No. 15–17531) located in Martin County, Kentucky. The petitioner requests a modification of the standard to allow the use of a 100 K W Diesel Generator Set, Serial Number 90–E5260. The petitioner has outlined in this petition specific terms, conditions, and safety procedures that would be followed when using the diesel generator system. The petitioner asserts that the proposed alternative method would provide at least the same measure of protection as would the mandatory standard.

8. Martin County Coal Corporation

[Docket No. M–96–54–C]

Martin County Coal Corporation, P.O. Box 5002, Inez, Kentucky 41224 has filed a petition to modify the application of 30 CFR 75.701 (grounding metallic frames, casings, and other enclosures of electric equipment) to its 1–C Mine (I.D. No. 15–03752) located in Martin County, Kentucky. The petitioner requests a modification of the standard to allow the use of a 100 K W Diesel Generator Set, Serial Number 90–E5260. The petitioner has outlined in this petition specific terms, conditions, and safety procedures that would be followed when using the diesel generator system. The petitioner asserts that the proposed alternative method would provide at least the same measure of protection as would the mandatory standard.

9. Pilgrim Mining Company, Inc.

[Docket No. M–96–55–C]

Pilgrim Mining Company, Inc., P.O. Box 2046, Inez, Kentucky 41224 has filed a petition to modify the application of 30 CFR 75.701 (grounding metallic frames, casings, and other enclosures of electric equipment) to its Pilgrim Mine Number Three (I.D. No. 15–17359) located in Martin County, Kentucky. The petitioner requests a modification of the standard to allow the use of a 150 K W Diesel Generator Set, Serial Number 94–E5913. The petitioner has outlined in this petition specific terms, conditions, and safety procedures that would be followed when using the diesel generator system. The petitioner asserts that the proposed alternative method would provide at least the same measure of protection as would the mandatory standard.

10. Pilgrim Mining Company, Inc.

[Docket No. M–96–56–C]

Pilgrim Mining Company, Inc., P.O. Box 2046, Inez, Kentucky 41224 has filed a petition to modify the application of 30 CFR 75.701 to its Voyager Mine Number Two (I.D. No. 15–17639) located in Martin County, Kentucky. The petitioner requests a modification of the standard to allow the use of a 150 K W Diesel Generator Set, Serial Number 94–E5913. The petitioner has outlined in this petition specific terms, conditions, and safety procedures that would be followed when using the diesel generator system. The petitioner asserts that the proposed alternative method would provide at least the same measure of protection as would the mandatory standard.

11. Garrett Mining, Inc.

[Docket No. M–96–57–C]

Garrett Mining, Inc., P.O. Box 262, Toler, Kentucky 41569 has filed a petition to modify the application of 30 CFR 75.350 (air courses and belt haulage entries) to its No. 2 Mine (I.D. No. 15–08079) located in Pike County, Kentucky. The petitioner proposes to use belt haulage entries as intake air courses for ventilation of active working places. The petitioner proposes to install a carbon monoxide monitoring system as an early warning fire detection system in all belt entries used as intake air courses. The petitioner asserts that the proposed alternative method would provide at least the same measure of protection as would the mandatory standard.

12. Windsor Coal Company

[Docket No. M–96–58–C]

Windsor Coal Company, P.O. Box 39, West Liberty, West Virginia 26074 has filed a petition to modify the application of 30 CFR 75.1700 (oil and gas wells) to its Windsor Mine (I.D. No. 46–01286) located in Brooke County, West Virginia. The petitioner proposes to clean out and plug oil and gas wells using specific techniques and procedures as outlined in the petition. The petitioner proposes to mine through the plugged oil or gas well. Prior to mining through, the petitioner would confer with the MSHA District Manager for approval of the specific mining procedures, and appropriate officials would be allowed to observe the process and all mining would be under the direct supervision of a certified official. The petitioner asserts that the proposed alternative method would provide at least the same measure of protection as would the mandatory standard.

13. Cyprus Plateau Mining Corporation

[Docket No. M–96–59–C]

Cyprus Plateau Mining Corporation, Buchanan Ingersoll Professional Corporation, One Oxford Centre, 301 Grant Street, 20th Floor, Pittsburgh, Pennsylvania 15219–1410 has filed a petition to modify the application of 30 CFR 75.364(a)(1) (weekly examination) to its Star Point No. 2 Mine (I.D. No. 42–00171) located in Carbon County, Utah. Due to deteriorating roof conditions in certain parts of the mine near the Lion Portal and in the Middle Seam/Mudwater, traveling that portion of the return air course would be unsafe. The petitioner proposes to establish four evaluation points to monitor the methane, and air quantity measurements in the worked-out areas; to travel the worked-out areas to the point of deepest penetration; to maintain the evaluation points in safe condition; and to have a certified person evaluate the worked-out areas at each evaluation point on a weekly basis in order to identify any potential hazards. The petitioner asserts that the proposed alternative method would provide at least the same measure of protection as would the mandatory standard.

14. Shell Energy Company, Inc.

[Docket No. M–96–60–C]

Shell Energy Company, Inc., P.O. Box 423, Fairmont, West Virginia 26554 has filed a petition to modify the application of 30 CFR 75.380 (d)(3) and (d)(4) (escapeways; bituminous and lignite mines) to its Stacey-Meranda Mine (I.D. No. 46–08086) located in Harrison County, West Virginia. Due to adverse roof conditions, the post and cribs cannot be removed. The petitioner proposes to use the No. 2 conveyor belt entry as an alternate escape. The petitioner proposes to post luminous warning signs ''DANGER CLOSE CLEARANCE'' at each end of the affected area so that in the event of a fire disabled persons can be transported through the affected area safely; to provide the required clearance if technology becomes available to remove the post and cribs; and to have the mine on a blowing system without power installation in the intake escapeway. The petitioner states that the proposed alternative method would enhance safety and reduce exposure to hazardous conditions for mine personnel.

15. Cyprus Cumberland Resources Corporation

[Docket No. M–96–61–C]

Cyprus Cumberland Resources Corporation, RD 3, Box 184, Waynesburg, Pennsylvania 15370 has filed a petition to modify the application of 30 CFR 75.351(b)(2)(i) (atmospheric monitoring system (AMS)) to its Cumberland Mine (I.D. No. 36–05018) located in Greene County, Pennsylvania. The petitioner proposes to install a methane monitor on the tailgate side of the longwall face that would automatically deenergize the longwall face equipment at the stage loader when the methane sensor is not operating properly, instead of using a tailgate methane sensor; and within 60 days after petition for modification is granted submit proposed revisions for its Part 48 training plan to the Coal Mine Safety and Health District Manager. The petitioner asserts that the proposed alternative method would provide at least the same measure of protection as would the mandatory standard.

16. Cyprus Cumberland Resources Corporation

[Docket No. M–96–62–C]

Cyprus Cumberland Resources Corporation, RD 3, Box 184, Waynesburg, Pennsylvania 15370 has filed a petition to modify the application of 30 CFR 75.350 (air courses and belt haulage entries) to its Cumberland Mine (I.D. No. 36–05018) located in Greene County, Pennsylvania. The petitioner requests a modification of its previously granted petition, docket number M–84–218–C for 30 CFR 75.326 (now 75.350), to permit the velocity of air in the belt conveyor entries to be increased above 300 feet per minute (fpm). The petitioner asserts that the proposed alternative method would provide at least the same measure of protection as would the mandatory standard.

17. Enlow Fork Mining Company

[Docket No. M–96–63–C]

Enlow Fork Mining Company, Consol Plaza, 1800 Washington Road, Pittsburgh, Pennsylvania 15241–1421 has filed a petition to modify the application of 30 CFR 75.503 (Schedule 2G, Section 18.35) (permissible electric face equipment; maintenance) to its Enlow Fork Mine (I.D. No. 46–07416) located in Greene County, Pennsylvania. The petitioner proposes to increase the maximum length of the loading machine, shuttle car, roof bolter, and section ventilation fan trailing cables to 900 feet while developing four-entry longwall panels; to provide training before alternative method is implemented to all miners designated to examine the integrity of seals and verify the short-circuit settings and proper procedures for examining trailing cables for damage; and to submit proposed revisions for their Part 48 training plan to the Coal Mine Safety and Health District Manager. The petitioner asserts that the proposed alternative method would provide at least the same measure of protection as would the mandatory standard.

18. West Cameron Mining

[Docket No. M–96–64–C]

West Cameron Mining, RD #2, Box 630, Shamokin, Pennsylvania 17872 has filed a petition to modify the application of 30 CFR 75.1100 (quantity and location of firefighting equipment) to its Lenig Tunnel (I.D. No. 36–08288) located in Northumberland County, Pennsylvania. The petitioner proposes to use only portable fire extinguishers to replace existing requirements where rock dust, water cars, and other water storage are not practical. The petitioner asserts that the proposed alternative method would provide at least the same measure of protection as would the mandatory standard.

19. West Cameron Mining

[Docket No. M–96–65–C]

West Cameron Mining, RD #2, Box 630, Shamokin, Pennsylvania 17872 has filed a petition to modify the application of 30 CFR 75.1200(d) & (i) (mine map) to its Lenig Tunnel (I.D. No. 36–08288) located in Northumberland County, Pennsylvania. The petitioner proposes to use cross-sections instead of contour connections between veins, and at 1,000-foot intervals of advance from the intake slope and to limit the required mapping of the mine workings above and below to those present within 100 feet of the veins being mined except when veins are interconnected to other veins beyond the 100-foot limit through rock tunnel. The petitioner asserts that the proposed alternative method would provide at least the same measure of protection as would the mandatory standard.

20. West Cameron Mining

[Docket No. M–96–66–C]

West Cameron Mining, RD #2, Box 630, Shamokin, Pennsylvania 17872 has filed a petition to modify the application of 30 CFR 75.1202–1(a) (temporary notations, revisions, and supplements) to its Lenig Tunnel (I.D. No. 36–08288) located in Northumberland County, Pennsylvania. The petitioner proposes to revise and supplement mine maps annually instead of every 6 months, as required, and to update maps daily by hand notations. The petitioner asserts that the proposed alternative method would provide at least the same measure of protection as would the mandatory standard.

21. West Cameron Mining

[Docket No. M–96–67–C]

West Cameron Mining, RD #2, Box 630, Shamokin, Pennsylvania 17872 has filed a petition to modify the application of 30 CFR 75.1405 (automatic couplers) to its Lenig Tunnel (I.D. No. 36–08288) located in Northumberland County, Pennsylvania. The petitioner proposes to use bar and pin or link and pin couplers on its underground haulage equipment. The petitioner asserts that the proposed alternative method would provide at least the same measure of protection as would the mandatory standard.

22. Ember Contracting, Inc.

[Docket No. M–96–68–C]

Ember Contracting, Inc., Box 446, Betsy Lane, Kentucky 41605 has filed a petition to modify the application of 30 CFR 75.342 (methane monitors) to its No. 5 Mine (I.D. No. 15–16727) located in Knott County, Kentucky. The petitioner proposes to use hand-held continuous-duty methane oxygen indicators instead of machine mounted

methane monitors on its permissible DC powered scoop haulage machines. The petitioner states that this petition is based on the safety of the miners involved and not primarily on economic standpoints.

23. Cyprus Emerald Resources Corporation

[Docket No. M–96–69–C]

Cyprus Emerald Resources Corporation, 145 Elm Drive, Waynesburg, Pennsylvania 15370 has filed a petition to modify the application of 30 CFR 75.507 (power connection points) to its Emerald No. 1 Mine (I.D. No. 36–05466) located in Greene County, Pennsylvania. The petitioner proposes to use a non-permissible pump in the longwall bleeder sump located near the No. 3 Bleeder shaft, No. 6 Return shaft, and all future and/or bleeder shafts as they are developed. The petitioner asserts that the proposed alternative method would provide at least the same measure of protection as would the mandatory standard.

24. Consolidation Coal Company

[Docket No. M–96–70–C]

Consolidation Coal Company, Consol Plaza, 1800 Washington Road, Pittsburgh, Pennsylvania 15241–1421 has filed a petition to modify the application of 30 CFR 75.804(a)(underground high-voltage cables) to its Loveridge No. 22 Mine (I.D. No. 46–01433) located in Marion County, West Virginia. The petitioner proposes to uses a high-voltage cable with an internal ground check conductor smaller than No. 10 (A.W.G.) as a part of its longwall mining system. The petitioner asserts that the proposed alternative method would provide at least the same measure of protection as would the mandatory standard.

25. Genwal Resources, Inc.

[Docket No. M–96–71–C]

Genwal Resources, Inc., P.O. Box 1420, Huntington, Utah 84528 has filed a petition to modify the application of 30 CFR 75.350 (air courses and belt haulage entries) to its Crandall Canyon Mine (I.D. No. 42–01715) located in Emery County, Utah. The petitioner proposes to use belt air in a two-entry mining system. The petitioner proposes to install low-level carbon monoxide sensors as an early warning fire detection system in the intake escapeway entry and the belt entry. The petitioner states that application of the standard would result in a diminution of safety to the miners. In addition, the petitioner asserts that the proposed alternative method would provide at least the same measure of protection as would the mandatory standard.

26. North American Salt Company

[Docket No. M–96–01–M]

North American Salt Company, P.O. Box 10, Lydia, Louisiana 70569 has filed a petition to modify the application of 30 CFR 57.22215(b)(1) to its Cote Blanche Underground Salt Mine (I.D. No. 16–00358) located in St. Mary County, Louisiana. The petitioner requests a modification of the standard to allow the use of flexible ventilation tubing in lengths greater than 250 feet. The petitioner states that application of the standard would result in a diminution of safety to the miners. In addition, the petitioner asserts that the proposed alternative method would provide at least the same measure of protection as would the mandatory standard.

Request for Comments

Persons interested in these petitions may furnish written comments. These comments must be filed with the Office of Standards, Regulations, and Variances, Mine Safety and Health Administration, Room 627, 4015 Wilson Boulevard, Arlington, Virginia 22203. All comments must be postmarked or received in that office on or before August 26, 1996. Copies of these petitions are available for inspection at that address.

Dated: July 18, 1996.

Patricia W. Silvey,

Director, Office of Standards, Regulations and Variances.

[FR Doc. 96–18947 Filed 7–24–96; 8:45 am]

BILLING CODE 4510–43–P

NUCLEAR REGULATORY COMMISSION

[Docket No.: 070–3073]

Kerr-McGee Corp.; Applications, Hearings, Determinations, Etc.

AGENCY: U.S. Nuclear Regulatory Commission.

ACTION: Notice of consideration of amendment request and opportunity for hearing related to materials license No. SNM–1999 for the Kerr-McGee Corporation, Oklahoma City, Oklahoma.

The U.S. Nuclear Regulatory Commission is considering issuance of an amendment to Special Nuclear Material License No. SNM–1999 issued to the Kerr-McGee Corporation for the possession of special nuclear material at its facility at Cushing, Oklahoma in response to three requests from the licensee.

In accordance with License Condition 11.D the licensee requested an amendment to its license by letter dated June 3, 1993. The amendment would revise the license to define ''the proposed boundaries of all radioactive materials areas designated in accordance with 10 CFR 20.203(e)(2) [now 10 CFR 20.1902(e)], restricted areas as defined in 10 CFR 20.3 [now 10 CFR 20.1003], and areas outside of the restricted areas, where licensed materials exist which must be secured from unauthorized removal per 10 CFR 20.207 [now 10 CFR 20.1801].''

The licensee requested a second amendment in a letter dated May 10, 1995. The amendment would authorize the licensee to possess calibration and reference radioactive sources containing U–235, not to exceed 0.1 microCurie per source.

The licensee is performing decommissioning activities at the Cushing, Oklahoma site under NRC license SNM–1999. License SNM–1999 provides for possession of natural and enriched uranium and thorium in the form of ''Contaminated soil, sludge, sediment, trash, building rubble, structures, and any other contaminated material.'' The licensee utilizes those same radionuclides, as well as others not specified in the license, to calibrate equipment and as check sources for instruments. Except for U–235, all sources are either exempt quantities or are addressed by a general license, e.g., Pu-239 and Am–241. However, there is no exempt quantity or general license for U–235.

The licensee requested the third amendment in a letter dated October 20, 1995. The licensee submitted supplemental information via letters dated February 15, and January 15, 1996. The amendment would: (1) Incorporate a revised organizational chart into the license; (2) correct the license to reflect the licensee's new contact person; (3) change approval authority from a corporate officer to the Radiation Safety Officer for all radiation protection program procedures; (4) remove the requirements to provide bi-monthly urinalysis and biennial in-vivo lung counts and base these submittal on worker exposures; (5) replace the requirement to provide lapel air samplers to 50 percent of all workers working in radioactive materials areas with a performance based requirement for issuance of lapel air samplers; (6) remove specified length of training from training program requirements; (7) change the requirement to process workers film badges from monthly to

quarterly; and (8) change the monitoring equipment calibration laboratory from Cimarron site laboratory to Cushing site laboratory.

Prior to the issuance of the proposed amendments, the NRC will have made findings, required by the Atomic Energy Act of 1954, as amended, and the NRC's regulations. These findings will be documented in a Safety Evaluation Report and an Environmental Assessment. The NRC hereby provides notice that these actions are a proceeding on an application for license amendments falling within the scope of Subpart L, Informal Hearing Procedures for Adjudications in Materials Licensing Proceedings, of the NRC's rules of practice for domestic licensing proceedings in 10 CFR Part 2. Pursuant to § 2.1205(a), any person whose interest may be affected by this proceeding may file a request for a hearing in accordance with § 2.1205(c). A request for a hearing must be filed within thirty (30) days of the date of publication of this Federal Register notice.

The request for a hearing must be filed with the Office of the Secretary either:

1. By delivery to the Docketing and Services Branch of the Office of the Secretary at One White Flint North, 11555 Rockville Pike, Rockville, MD 20852–2738; or

2. By mail or telegram addressed to the Secretary, U.S. Nuclear Regulatory Commission, Washington, DC 20555–0001 Attention: Docketing and Services Branch.

In addition to meeting other applicable requirements of 10 CFR Part 2 of the NRC's regulations, a request for a hearing filed by a person other than an applicant must describe in detail:

1. The interest of the requester in the proceeding;

2. How that interest may be affected by the results of the proceeding, including the reasons why the requester should be permitted a hearing, with particular reference to the factors set out in § 2.1205(g);

3. The requester's areas of concern about the licensing activity that is the subject matter of the proceeding; and

4. The circumstances establishing that the request for a hearing is timely in accordance with § 2.1205(c).

In accordance with 10 CFR § 2.1205(e), each request for a hearing must also be served, by delivering it personally or by mail to:

1. The applicant, Kerr-McGee Corporation, Attention: Mr. Jeff J. Lux, Project Manager, P.O. Box 25861, Oklahoma City, Oklahoma 73125; and

2. The NRC staff, by delivery to the Executive Director for Operations, One White Flint North, 11555 Rockville Pike, Rockville, MD 20852, or by mail addressed to the Executive Director for Operations, U.S. Nuclear Regulatory Commission, Washington, DC 20555–0001.

For further details with respect to the proposed action, see the licensee's requests for license amendment dated June 3, 1993, May 10, 1995, and October 20, 1995, and supplementary information, which is available for inspection at the NRC's Public Document Room, 2120 L Street NW., Washington, DC 20555–0001.

Dated at Rockville, Maryland, this day of July, 1996.

For the Nuclear Regulatory Commission.

Michael F. Weber,

Chief, Low-Level Waste and Decommissioning Projects Branch, Division of Waste Management, Office of Nuclear Material Safety and Safeguards.

[FR Doc. 96–18919 Filed 7–24–96; 8:45 am]

BILLING CODE 7590–01–P

[Docket Nos. 50–282 and 50–306]

Northern States Power Company; Notice of Withdrawal of Application for Amendment to Facility Operating License

The U.S. Nuclear Regulatory Commission (the Commission) has granted the request of Northern States Power Company (the licensee) to withdraw a portion of its January 9, 1995, application, as supplemented February 7, March 15, March 22, April 3, and April 20, 1995, for proposed amendments to Facility Operating License Nos. DPR–42 and DPR–60 for the Prairie Island Nuclear Generating Plants, Units 1 and 2, located in Red Wing, Minnesota.

The proposed amendments would have revised the Technical Specifications to allow the use of an alternate steam generator tube plugging criteria for tubes with degradation in tubesheet roll expansion region. The licensee requested the use of both F* and L* acceptance criteria. The Commission granted the licensee's request for use of the F* acceptance criteria in amendments 118 and 111 issued May 15, 1995. The licensee submitted an application for withdrawal of the L* portion in a letter dated May 3, 1996.

The Commission had previously issued a Notice of Consideration of Issuance of Amendments published in the Federal Register on March 15, 1995 (60 FR 14023). However, by letter dated May 3, 1996, the licensee withdrew the L* portion of the proposed change.

For further details with respect to this action, see the application for amendments dated January 9, 1995, and supplemented February 7, March 15, March 22, April 3, and April 20, 1995, and the licensee's letter dated May 3, 1996, which withdrew the application for license amendments. The above documents are available for public inspection at the Commission's Public Document Room, the Gelman Building, 2120 L Street, NW., Washington, DC, and at the local public document room located at the Minneapolis Public Library, Technology and Science Department, 300 Nicollet Mall, Minneapolis, Minnesota 55401.

Dated at Rockville, Maryland, this 18th day of July 1996.

For the Nuclear Regulatory Commission.

Beth A. Wetzel,

Project Manager, Project Directorate III–1, Division of Reactor Projects—III/IV, Office of Nuclear Reactor Regulation.

[FR Doc. 96–18918 Filed 7–24–96; 8:45 am]

BILLING CODE 7590–01–P

[Docket No. 40–08948]

Notice of Availability of "Draft Environmental Impact Statement—Decommissioning of the Shieldalloy Metallurgical Corporation, Cambridge Ohio, Facility"

AGENCY: Nuclear Regulatory Commission.

SUMMARY: The Nuclear Regulatory Commission (NRC) has published a Draft Environmental Impact Statement (DEIS) regarding the proposed decommissioning of the Shieldalloy Metallurgical Corporation (SMC), Cambridge, Ohio, facility. This DEIS describes and evaluates the potential environmental impacts of SMC's proposed approach to decommissioning two radiologically contaminated waste piles by capping and stabilizing the piles in place and implementing appropriate land-use restrictions. Based on the evaluations in this DEIS, the NRC staff's preliminary conclusion is that SMC's proposal, with certain mitigative measures, is acceptable with respect to environmental costs and benefits, and there is no obviously superior alternative. The DEIS is a preliminary analysis of the environmental impacts of SMC's proposed approach. The issuance of a final EIS, and any NRC decisionmaking based on a final EIS, will not be made until public comments on the DEIS are received and evaluated.

DATES: NRC will conduct a public meeting to discuss the DEIS and obtain public comment this Fall, in the Cambridge, Ohio area. A meeting

announcement will be published as a Federal Register notice. Written comments on the DEIS should be received at the address listed below within ninety (90) days from the date on which the Environmental Protection Agency notice is published in the Federal Register stating that the DEIS has been filed with EPA. To the extent practicable, NRC staff will grant reasonable requests for extensions of time for comment up to fifteen (15) days. Comments received after this date will be considered if it is practical to do so, but the Commission is able to assure consideration only for comments received on or before this date.

ADDRESSES: A single copy of the DEIS (NUREG–1543) may be requested by those considering public comment by writing to the NRC Publications Section, ATTN.: Superintendent of Documents, U.S. Government Printing Office, P.O. Box 37082, Washington, DC 20013–7082, or by calling 202–512–1800. A copy of the DEIS is available for inspection and/or copying in the NRC Public Document Room, 2120 L St. NW., Washington, DC 20555–0001. A copy will also be available shortly for public inspection at the Guernsey County District Library, 800 Steubenville Avenue, Cambridge, Ohio 43725–2385.

Any interested party may submit comments on this document for consideration by the staff. Consistent with its past commitments, NRC is extending the comment period 45 days beyond the required minimum of 45 days. To be certain of consideration, comments on these reports must be received within 90 days from the date of this notice. Comments received after the due date will be considered to the extent practical. Comments should be sent to Michael Weber, Chief, Low-Level Waste and Decommissioning Projects Branch, Mail Stop T7F–27, Division of Waste Management, Office of Nuclear Material Safety and Safeguards, U.S. Nuclear Regulatory Commission, Washington, DC 20555–0001.

FOR FURTHER INFORMATION CONTACT: Mr. Mark Thaggard, Low-Level Waste and Decommissioning Projects Branch, Mail Stop T7D–13, Division of Waste Management, Office of Nuclear Material Safety and Safeguards, U.S. Nuclear Regulatory Commission, Washington, D.C. 20555–0001. Telephone 301/415–6718.

SUPPLEMENTARY INFORMATION: The NRC has prepared a DEIS that evaluates the environmental impacts and alternatives associated with SMC's proposed approach to decommissioning radiologically contaminated waste piles by capping and stabilizing the piles in place and implementing appropriate land-use restrictions. NRC noticed its intent to prepare an EIS on the decommissioning of the SMC facility in Cambridge, Ohio, on November 26, 1993 (58 FR 62383) and conducted a public meeting to obtain comments on the intended scope of the EIS in Byesville, Ohio, on December 13, 1993.

SMC holds a license (SMB–1507) with the NRC for possession of source material (i.e., uranium and thorium) at its Cambridge facility. The source material is in the form of slag and contaminated soil located in two piles that contain a total of 546,000 metric tons (606,000 tons) of material. The radioactive materials in the slag were contaminants in the ores and processed materials used at the site to produce metal alloys and other compounds. The contaminated slag was produced at the site prior to Shieldalloy's acquisition of the facility in 1987. The piles also contain chemical contaminants that may require remediation.

SMC proposes to stabilize and cap the slag piles in place and implement land-use restrictions to ensure people do not inadvertently dig into the piles and expose themselves to elevated levels of radiation. Three other variations of SMC's proposed alternative are considered in the DEIS, including: (1) Stabilizing the material on site along with an additional 10,000 cubic yards of slag added from off site, (2) stabilizing the material on site along with additional soil contaminated with metals, and (3) stabilizing the material on site along with both the additional slag and soils. In addition, the DEIS considers three other alternatives, including: (1) The no-action alternative, (2) disposing the material off site at a facility that is licensed to dispose of radioactive waste, and (3) sale of the slag for reuse. Two additional alternatives were considered but eliminated from detail study; these are: (1) diluting the contaminated material to reduce concentrations of radioactive materials, and (2) separating and removing the most contaminated material for disposal offsite.

The DEIS evaluates radiological and nonradiological impacts associated with the proposed action. Impacts are assessed for land use, socioeconomic and cultural resources, air quality, water quality, human health, and biological resources. The NRC staff's preliminary conclusion is that environmental impacts from SMC's proposed alternative is not significant if certain mitigative measures are implemented, and there is no obviously superior alternative. The potential long-term human health effects from taking no action are significant; therefore, some remediation actions is appropriate and required by NRC regulations. Removing the contaminated material from the site will result in the smallest long-term environmental effects (impacts at the disposal facility have been previously assessed); however, the costs are quite significant. The off-site disposal alternative also has some potentially significant impacts on air quality and noise that would require mitigation. Further, the off-site disposal alternative is expected to result in a slightly higher incident of worker injuries than the on-site disposal alternatives. A cost benefit analysis shows that all on-site disposal alternatives have identical economic benefits, and the no action alternative has no economic benefits.

The NRC is offering an opportunity for public review and comment on the DEIS in accordance with NRC requirements in 10 CFR 51.73, 51.74, and 51.117. Any comments of Federal, State, and local agencies, Indian tribes, or other interested parties will be made available for public inspection when received. The DEIS is a preliminary analysis of the environmental impacts of SMC's proposed approach. The issuance of a final EIS, and any NRC decisionmaking based on a final EIS, will not be made until public comments on the DEIS are received and evaluated. NRC staff will review the comments, conduct any necessary analyses, and make appropriate revisions in developing the final EIS on the decommissioning of the Shieldalloy Metallurgical Corporation Cambridge, Ohio, facility. NRC anticipates completing the EIS on this facility in 1997. However, this schedule may need to be adjusted in reviewing public comments.

NRC is also arranging a public meeting on the DEIS to be held in the vicinity of Cambridge, Ohio, during the public comment period in the early Fall of 1996. The meeting will consist of an overview of the DEIS and an opportunity for the NRC to hear any public comments on the DEIS. NRC will announce the date and location for this meeting in a subsequent Federal Register notice well in advance of the public meeting.

Dated at Rockville, Maryland, this 19th day of July 1996.

For the Nuclear Regulatory Commission.

Michael F. Weber,

Chief Low-Level Waste and Decommissioning Projects Branch, Division of Waste Management, Office of Nuclear Material Safety and Safeguards.

[FR Doc. 96–18920 Filed 7–24–96; 8:45 am]

BILLING CODE 7590–01–P

OFFICE OF THE UNITED STATES TRADE REPRESENTATIVE

WTO Dispute Settlement Proceeding Regarding Patent Protection in Pakistan for Pharmaceuticals and Agricultural Chemicals

AGENCY: Office of the United States Trade Representative.

ACTION: Notice; request for comments.

SUMMARY: Pursuant to section 127(b)(1) of the Uruguay Round Agreements Act (URAA) (19 U.S.C. 3537(b)(1)), the Office of the United States Trade Representative (USTR) is providing notice that the United States has requested the establishment of a dispute settlement panel under the Agreement Establishing the World Trade Organization (WTO), to examine Pakistan's failure to make patent protection available for inventions as specified in Article 27 of the Agreement on Trade-Related Aspects of Intellectual Property Rights (TRIPS), or provide systems that conform to obligations of the TRIPS Agreement regarding the acceptance of applications and the grant of exclusive marketing rights. More specifically, the United States has requested the establishment of a panel to determine whether Pakistan's legal regime is inconsistent with the obligations of the TRIPS Agreement, including but not necessarily limited to Articles 27, 65 and 70. USTR also invites written comments from the public concerning the issues raised in the dispute.

DATES: Although USTR will accept any comments received during the course of the dispute settlement proceedings, comments should be submitted on or before August 30, 1996, to be assured of timely consideration by USTR in preparing its first written submission to the panel.

ADDRESSES: Comments may be submitted to Sybia Harrison, Office of the General Counsel, Room 222, Attn: Pakistan Mailbox Dispute, Office of the U.S. Trade Representative, 600 17th Street, NW., Washington, DC 20508.

FOR FURTHER INFORMATION CONTACT: Thomas Robertson, Associate General Counsel, Office of the General Counsel, Office of the U.S. Trade Representative, 600 17th Street, NW., Washington, DC 20508, (202) 395–6800.

SUPPLEMENTARY INFORMATION: On July 4, 1996, the United States requested establishment of a WTO dispute settlement panel to examine whether Pakistan's legal regime is inconsistent with the obligations of the TRIPS Agreement. The WTO Dispute Settlement Body (DSB) considered the U.S. request at its meeting on July 15, 1996. Under the WTO Understanding on Rules and Procedures Governing the Settlement of Disputes, the DSB must establish a panel at the next DSB meeting where this request is on the agenda, unless the DSB determines by consensus otherwise. Under normal circumstances, the panel would be expected to issue a report detailing its findings and recommendations within six to nine months after it is established.

Major Issues Raised by the United States and Legal Basis of Complaint

The TRIPS Agreement requires all WTO Members to grant patents for the subject matter specified in Article 27 of the Agreement. Article 70.8 of the TRIPS Agreement provides that where a Member takes advantage of the transitional provisions under the Agreement and does not make product patent protection available for pharmaceutical and agricultural chemical inventions as of the date of entry into force of the WTO Agreement (i.e., January 1, 1995), that Member must implement measures to permit Members' nationals to file patent applications drawn to such inventions on or after that January 1, 1995. When the member fully implements the product patent provisions of TRIPS Agreement Article 27, these applications must be examined according to the criteria for patentability set forth in the Agreement, based on the earliest effective filing date claimed for the application. Patents granted on these applications must enjoy the term and rights mandated by the TRIPS Agreement.

The TRIPS Agreement further requires Members subject to the obligations of Article 70.8 to provide exclusive marketing rights to those persons who have filed an application under the interim filing procedures, provided that the product covered by the invention has been granted marketing approval in the member providing this transitional protection and another Member, and a patent has been granted on the invention in another Member.

The legal regime in Pakistan currently does not make patent protection available for inventions as specified in Article 27 of the TRIPS Agreement, or provide systems that conform to obligations of the TRIPS Agreement regarding the acceptance of applications and the grant of exclusive marketing rights. As a result, Pakistan's legal regime appears to be inconsistent with the obligations of the TRIPS Agreement, including but not necessarily limited to Articles 27, 65 and 70.

Public Comment: Requirements for Submissions

Interested persons are invited to submit written comments concerning the issues raised in the dispute. Comments must be in English and provided in fifteen copies. A person requesting that information contained in a comment submitted by that person be treated as confidential business information must certify that such information is business confidential and would not customarily be released to the public by the commenter. Confidential business information must be clearly market ''BUSINESS CONFIDENTIAL'' in a contrasting color ink at the top of each page of each copy.

A person requesting that information or advice contained in a comment submitted by that person, other than business confidential information, be treated as confidential in accordance with section 135(g)(2) of the Trade Act of 1974 (19 U.S.C. 2155)—

(1) must so designate that information or advice;

(2) must clearly mark the material as ''CONFIDENTIAL'' in a contrasting color ink at the top of each page of each copy; and

(3) is encouraged to provide a non-confidential summary of the information or advice.

Pursuant to section 127(e) of the URAA, USTR will maintain a file on this dispute settlement proceeding, accessible to the public, in the USTR Reading Room: Room 101, Office of the United States Trade Representative, 600 17th Street, NW., Washington DC 20508. The public file will include a listing of any comments made to USTR from the public with respect to the proceeding; the U.S. submissions to the panel in the proceeding; the submissions, or non-confidential summaries of submissions, to the panel received from other participants in the dispute, as well as the report of the dispute settlement panel and, if applicable, the report of the Appellate Body. An appointment to review the public file (Docket WTO/D–8, ''U.S.-Pakistan: Mailbox''), may be made by calling Brenda Webb, (202) 395–6186. The USTR Reading Room is open to the public from 10 a.m. to 12 noon and 1 p.m. to 4 p.m., Monday through Friday.

Jennifer Hillman,

General Counsel.

[FR Doc. 96–18933 Filed 7–24–96; 8:45 am]

BILLING CODE 3190–01–M

SECURITIES AND EXCHANGE COMMISSION

[Release No. 34–37454; File No. SR–CBOE–96–42]

Self-Regulatory Organizations; Notice of Filing and Immediate Effectiveness of Proposed Rule Change by the Chicago Board Options Exchange, Incorporated Relating to Exchange Fees

July 18, 1996.

Pursuant to Section 19(b)(1) of the Securities Exchange Act of 1934 (''Act''), 15 U.S.C. 78s(b)(1), notice is hereby given that on June 28, 1996, the Chicago Board Options Exchange, Incorporated (''CBOE'' or ''Exchange'') filed with the Securities and Exchange Commission (''Commission'' or ''SEC'') the proposed rule change as described in Items I, II, and III below, which Items have been prepared by the CBOE. The Commission is publishing this notice to solicit comments on the proposed rule change from interested persons.

I. Self-Regulatory Organization's Statement of the Terms of Substance of the Proposed Rule Change

The Exchange is proposing to renew and amend (i) its Fee Reduction Program for Market-Maker Transaction Fees, Floor Broker Fees, and Member Dues; and (ii) its Customer ''Large'' Trade Discount Program.

The text of the proposed rule change is available at the Office of the Secretary, CBOE and at the Commission.

II. Self-Regulatory Organization's Statement of the Purpose of, and Statutory Basis for, the Proposed Rule Change

In its filing with the Commission, the CBOE included statements concerning the purpose of and basis for the proposed rule change and discussed any comments it received on the proposed rule change. The text of these statements may be examined at the places specified in Item IV below. The CBOE has prepared summaries, set forth in sections A, B, and C below, of the most significant aspects of such statements.

A. Self-Regulatory Organization's Statement of the Purpose of, and Statutory Basis for, the Proposed Rule Change

The purpose of this proposed rule change is to renew and amend (i) the Exchange's Fee Reduction Program for Market-Maker Transaction Fees, Floor Broker Fees, and Member Dues; and (ii) its Customer ''Large'' Trade Discount Program. The foregoing fee changes are being implemented by the Exchange pursuant to CBOE Rule 2.22 and will take effect on July 1, 1996.

The Exchange's Fee Reduction Program for Market-Maker Transaction Fees, Floor Broker Fees, and Member Dues currently provides that if at the end of any quarter of the Exchange's fiscal year the Exchange's average contract volume per day on a fiscal year-to-date basis exceeds one of certain predetermined volume thresholds, the Exchange's market-maker transaction fees, floor broker fees, and member dues will be reduced in the following fiscal quarter in accordance with a fee reduction schedule. The Program is scheduled to terminate on June 30, 1996 at the end of the Exchange's 1996 fiscal year. The Program is proposed to be amended to provide that the Program will continue in effect during the Exchange's 1997 fiscal year and will terminate on June 30, 1997. The Program is also proposed to be amended to increase the volume thresholds and decrease the fee reduction amounts which currently apply under the Program. Specifically, the market-maker transaction fee reduction, which currently ranges from $.01 to $.03 for volumes of 625,000 to 750,000, as amended will be decreased to $.01 for all volumes commencing at 675,000 contracts. Also, the floor broker fee reduction, which currently ranges from $.005 to $.01 for volumes ranging from 650,000 to 750,000 contracts, as amended will be decreased to $.005 for all volumes commencing at 700,000 contracts. Finally, the member dues fee reduction, which currently ranges from 25% to 100% for volumes ranging from 625,000 to 750,000, as amended will increase the volume thresholds and cap the fee reduction rate at 75%.

The Exchange's Customer ''Large'' Trade Discount Program currently provides for discounts on the transaction fees that CBOE members pay with respect to public customer orders for 500 or more contracts. Specifically, for any month the Exchange's average contract volume per day exceeds one of certain predetermined volume thresholds, the transaction fees that are assessed by the Exchange in that month with respect to public customer orders for 500 or more contracts are subject to a discount in accordance with a discount schedule. The Program is scheduled to terminate on June 30, 1996 at the end of the Exchange's 1996 fiscal year. The Program is proposed to be amended to provide that the Program will continue in effect during the Exchange's 1997 fiscal year and will terminate on June 30, 1997. In addition to renewing the current fee discount percentages under the Program, the Program is also proposed to amended to increase the threshold monthly average contract volume per day from 550,000 contacts to 575,000 contacts to which a 30% discount rate applies.[1] In all other respects the Program remains unchanged.

The proposed amendments are the product of the Exchange's annual budget review. The amendments are structured to fairly allocate the costs of operating the Exchange in the event that the Exchange experiences higher volume. In addition, although the proposed rule change provides that the Exchange's Fee Reduction Program for Market-Maker Transaction Fees, Floor Broker Fees, and Member Dues and the Exchange's Customer ''Large'' Trade Discount Program will terminate at the end of the Exchange's 1997 fiscal year, the Exchange intends to evaluate these Programs prior to the beginning of the 1998 fiscal year and may renew these Programs in the same or modified form for the 1998 fiscal year.

The proposed rule change is consistent with section 6(b) of the Act, in general, and furthers the objectives of Section 6(b)(4) of the Act in particular, in that it is designed to provide for the equitable allocation of reasonable dues, fees, and other changes among CBOE members.

B. Self-Regulatory Organization's Statement on Burden on Competition

The Exchange does not believe that the proposed rule change will impose any inappropriate burden on competition.

C. Self-Regulatory Organization's Statement on Comments on the Proposed Rule Change Received From Members, Participants, or Others

No written comments were solicited or received with respect to the proposed rule change.

III. Date of Effectiveness of the Proposed Rule Change and Timing for Commission Action

Because the foregoing rule change establishes or changes a due, fee, or other charge imposed by the Exchange, it has become effective pursuant to Section 19(b)(3)(A) of the Act and Rule 19b–4 thereunder. At any time within 60 days of the filing of the proposed rule change, the Commission may summarily abrogate such rule change if it appears to the Commission that such action is necessary or appropriate in the public interest, for the protection of investors,

[1] Pursuant to this Program, if for any month the Exchange's average contract volume per day is between 0 and 575,000 contracts, then the customer large trade discount is 25%.

or otherwise in furtherance of the purposes of the Act.

IV. Solicitation of Comments

Interested persons are invited to submit written data, views, and arguments concerning the foregoing. Persons making written submissions should file six copies thereof with the Secretary, Securities and Exchange Commission, 450 Fifth Street, N.W., Washington, D.C. 20549. Copies of the submission, all subsequent amendments, all written statements with respect to the proposed rule change that are filed with the Commission, and all written communications relating to the proposed rule change between the Commission and any person, other than those that may be withheld from the public in accordance with the provisions of 5 U.S.C. 552, will be available for inspection and copying in the Commission's Public Reference Section, 450 Fifth Street, N.W., Washington, D.C. 20549. Copies of such filing will also be available for inspection and copying at the principal office of the CBOE. All submissions should refer to the File No. SR–CBOE–96–42 and should be submitted by August 15, 1996.

For the Commission, by the Division of Market Regulation, pursuant to delegated authority.[2]

Margaret H. McFarland,

Deputy Secretary.

[FR Doc. 96–18855 Filed 7–24–96; 8:45 am]

BILLING CODE 8010–01–M

Agency Meeting

FEDERAL REGISTER Citation of Previous Announcement: [To be Published].

STATUS: Open Meeting.

PLACE: 450 Fifth Street, N.W., Washington, D.C.

DATE PREVIOUSLY ANNOUNCED: To be Published.

CHANGE IN THE MEETING: Additional Item.

The following item will be considered at an open meeting scheduled to be held on Wednesday, July 24, 1996, at 10:00 a.m.

The Commission will consider a concept release examining possible reform of the offering process under the Securities Act of 1933, including the company registration concept as well as other models for reform. For further information, contact Anita Klein at (202) 942–2900.

Commissioner Johnson, as duty officer, determined that Commission business required the above change and that no earlier notice thereof was possible.

At times, changes in Commission priorities require alterations in the scheduling of meeting items. For further information and to ascertain what, if any, matters have been added, deleted or postponed, please contact:

The Office of the Secretary (202) 942–7070.

Dated: July 22, 1996.

Jonathan G. Katz,

Secretary.

[FR Doc. 96–19041 Filed 7–23–96; 11:54 am]

BILLING CODE 8010–01–M

[2] 17 CFR 200.30–3(a)(12).

U.S. SMALL BUSINESS ADMINISTRATION

[Declaration of Economic Injury Disaster Loan Area #8965]

Florida; Declaration of Disaster Loan Area

Franklin, Gulf, Hillsborough, Levy, Taylor, and Wakulla Counties and the contiguous counties of Alachua, Bay, Calhoun, Citrus, Dixie, Gilchrist, Hardee, Jefferson, Lafayette, Leon, Liberty, Madison, Manatee, Marion, Pasco, Pinellas, and Polk in the State of Florida constitute an economic injury disaster area as a result of Red Tide contamination which caused the closure from May 31 to July 10, 1996 of the Apalachicola and Ochlockonee Bays to shellfish harvesting. Eligible small businesses without credit available elsewhere and small agricultural cooperatives without credit available elsewhere may file applications for economic injury assistance until the close of business on April 18, 1997 at the address listed below:

U.S. Small Business Administration, Disaster Area 2 Office, One Baltimore Place, Suite 300, Atlanta, Georgia 30308

or other locally announced locations. The interest rate for eligible small businesses and small agricultural cooperatives is 4 percent.

(Catalog of Federal Domestic Assistance Program No. 59002)

Dated: July 18, 1996.

Philip Lader,

Administrator.

[FR Doc. 96–18942 Filed 7–24–96; 8:45 am]

BILLING CODE 8025–01–P

SOCIAL SECURITY ADMINISTRATION

Privacy Act of 1974, as Amended; Computer Matching Program (SSA/Department of Labor (DOL)—Match Number 1013)

AGENCY: Social Security Administration.

ACTION: Notice of Computer Matching Program.

SUMMARY: In accordance with the provisions of the Privacy Act, as amended, this notice announces a computer matching program that SSA plans to conduct with DOL.

DATES: SSA will file a report of the subject matching program with the Committee on Governmental Affairs of the Senate, the Committee on Government Reform and Oversight of the House of Representatives and the Office of Information and Regulatory Affairs, Office of Management and Budget (OMB). The matching program will be effective as indicated below.

ADDRESSES: Interested parties may comment on this notice by either telefax to (410) 966–5138 or writing to the Associate Commissioner for Program and Integrity Reviews, 860 Altmeyer Building, 6401 Security Boulevard, Baltimore, MD 21235. All comments received will be available for public inspection at this address.

FOR FURTHER INFORMATION CONTACT: The Associate Commissioner for Program and Integrity Reviews as shown above.

SUPPLEMENTARY INFORMATION:

A. General

The Computer Matching and Privacy Protection Act of 1988 (Pub. L. 100–503), amended the Privacy Act (5 U.S.C. 552a) by establishing the conditions under which computer matching involving the Federal government could be performed and adding certain protections for individuals applying for and receiving Federal benefits. Section 7201 of the Omnibus Budget Reconciliation Act of 1990 (Pub. L. 101–508) further amended the Privacy Act regarding protections for such individuals. The Privacy Act, as amended, regulates the use of computer matching by Federal agencies when records in a system of records are matched with other Federal, State, or local government records. Among other things, it requires Federal agencies involved in computer matching programs to:

(1) Negotiate written agreements with the other agency or agencies participating in the matching programs;

(2) Obtain the Data Integrity Boards' approval of the match agreements;

(3) Furnish detailed reports about matching programs to Congress and OMB;

(4) Notify applicants and beneficiaries that their records are subject to matching; and

(5) Verify match findings before reducing, suspending, terminating or denying an individual's benefits or payments.

B. SSA Computer Matches Subject to the Privacy Act

We have taken action to ensure that all of SSA's computer matching programs comply with the requirements of the Privacy Act, as amended.

Dated: July 16, 1996.

Shirley S. Chater,

Commissioner of Social Security.

Notice of Computer Matching Program, Social Security Administration (SSA) with the Department of Labor (DOL)

A. Participating Agencies

SSA and DOL.

B. Purpose of the Matching Program

The purpose of this matching program is to establish the conditions, safeguards and procedures under which the Office of Workers' Compensation Programs, DOL, agrees to disclose Federal Employee Compensation Act benefit data to SSA. SSA will use the match results to verify the eligibility and benefits payable to individuals under the title II Disability Insurance program, a social insurance program administered by SSA, and to individuals under the Supplemental Security Income (SSI) program, which provides payments under title XVI of the Social Security Act (Act) to aged, blind and disabled recipients with income and resources below levels established by law and regulations, and federally administered supplementary payments under section 1616 of the Act, including payments under section 212 of Pub. L. 93–66, 87 Stat. 152.

C. Authority for Conducting the Matching Program

Sections 224, 1631(e)(1)(B) and 1631(f) of the Social Security Act [42 U.S.C. 424a, 1383(e)(1)(B) and 1383(f)].

D. Categories of Records and Individuals Covered by the Match

DOL will provide SSA with an electronic or magnetic tape file extracted from the Federal Employees' Compensation Act file. The extracted file will contain certain workers' compensation payment information. Each record on the DOL file will be matched to SSA's Supplemental Security Income Record, HHS/SSA/OSR 09–60–0103; Master Files of Social Security Number (SSN) Holders and SSN Applications, HHS/SSA/OSR 09–60–0058; and Master Beneficiary Record, HHS/SSA/OSR 09–60–0090, to identify individuals potentially subject to benefit reductions or termination of payment eligibility under the statutory provisions listed above.

E. Inclusive Dates of the Match

The matching program shall become effective on a date agreed upon by both parties, but no sooner than 40 days after a copy of the agreement, as approved by the Data Integrity Boards of both agencies, is sent to Congress and notice of agreement is sent to the Office of Management and Budget (OMB) (or later if OMB objects to some or all of the agreement) or 30 days after publication of this notice in the Federal Register, whichever is later. The matching program will continue for 18 months from the effective date and may be extended for an additional 12 months thereafter, if certain conditions are met.

[FR Doc. 96–18895 Filed 7–24–96; 8:45 am]

BILLING CODE 4190–29–P

DEPARTMENT OF TRANSPORTATION

Aviation Proceedings; Agreements Filed During the Week Ending 7/19/96

The following Agreements were filed with the Department of Transportation under the provisions of 49 U.S.C. 412 and 414. Answers may be filed within 21 days of date of filing.

Docket Number: OST–96–1541
Date filed: July 15, 1996
Parties: Members of the International Air Transport Association
Subject:
TC3 Reso/C 0087 dated May 31, 1996
TC3 (except to/from US) Resolutions
(Minutes can be found in COMP Meet/C 0202, filed this date with the Composite Resolutions. A summary is attached.)
r–1 to r–6
Intended effective date: October 1, 1996

Docket Number: OST–96–1542
Date filed: July 15, 1996
Parties: Members of the International Air Transport Association
Subject:
TC123 Reso/C 0037 dated May 31, 1996
TC123 via the Atlantic r1–2 Tables—TC123 Rates 0027 dated July 2, 1996
(Minutes are contained in COMP Meet/C 0203, filed this date with the Composite Resolutions. A summary is attached.)
r–1– 554d r–2–590
Intended effective date: October 1, 1996

Docket Number: OST–96–1543
Date filed: July 15, 1996
Parties: Members of the International Air Transport Association
Subject:
TC23 Reso/C 0222 dated May 31, 1996
TC23/TC23 (Except to/from US Territories)
TABLES—TC23 Rates 0221 dated July 9, 1996
(Minutes are contained in COMP Meet/C 0203, filed this dated with DOT with the composite resolutions. A summary is attached.)
r–1 to r–7—003hh Intended effective date: October 1, 1996.

Docket Number: OST–96–1544
Date filed: July 15, 1996
Parties: Members of the International Air Transport Association
Subject:
TC3 Telex Mail Vote 814
Sri Lanka-Australia/New Zealand Stay Requirement
Intended effective date: August 1, 1996

Docket Number: OST–96–1545
Date filed: July 15, 1996
Parties: Members of the International Air Transport Association
Subject:
COMP Reso/C 0668 dated June 7, 1996
All Composite Resolutions r1–14
(Except Reso 501—US/US Territories)
(Except Reso 518—US/US Territories)
Minutes—COMP Meet/C 0203 dated July 5, 1996
TABLES—COMP Rates 0583 dated July 5, 1996
CORRECTIONS—COMP Reso/C 0674 dated July 12, 1996
Excludes US/UST from Reso 518
(Summary attached to Minutes.)
Intended effective date: October 1, 1996

Docket Number: OST–96–1550
Date filed: July 16, 1996
Parties: Members of the International Air Transport Association
Subject:
TC2 Reso/C 0381 dated May 31, 1996
TC2 Resolutions
Tables—
TC2 Rates 0356 dated June 25, 1996
TC2 Rates 0357 dated June 25, 1996
TC2 Rates 0358 dated June 28, 1996
TC2 Rates 0369 dated June 28, 1996
TC2 Rates 0360 dated July 2, 1996

Intended effective date: October 1, 1996.

Paulette V. Twine,

Chief, Documentary Services Division.

[FR Doc. 96–18953 Filed 7–24–96; 8:45 am]

BILLING CODE 4910–62–P

Federal Highway Administration

Environmental Impact Statement: Imperial County, California

AGENCY: Federal Highway Administration (FHWA), DOT.

ACTION: Notice of intent.

SUMMARY: The FHWA is issuing this notice to advise the public that an environmental impact statement will be prepared for a proposed highway project in Imperial County, California.

FOR FURTHER INFORMATION CONTACT: Glenn C. Clinton, District Engineer, Federal Highway Administration, 980 9th Street, Suite 400, Sacramento, California 95814–2724; telephone: (916) 498–5037. Internet address: CClinton@INTERGATE.DOT.GOV

SUPPLEMENTARY INFORMATION: The FHWA, in cooperation with the California Department of Transportation will prepare an environmental impact statement (EIS) on a proposal to construct approximately 5.5 miles (8.9 km) of State Route 7 on new location between the existing junction of State Route 7 and State Route 98 to Interstate 8 in Imperial County, California.

Improvements to the corridor are considered necessary to provide for intraregional/international access between the United States/Mexico border crossing at the Calexico East Border Station and Interstate 8. Alternatives under consideration include (1) taking no action; (2) constructing a divided four-lane, controlled access expressway (ultimately to freeway standards) on new location; (3) alignment variations as appropriate to minimize environmental effects of the project.

Letters describing the proposed action and soliciting comments will be sent to appropriate Federal, State, and local agencies, and to private organizations and citizens who have previously expressed or are known to have interest in this proposal. A series of public meetings will be held in Imperial County between July and August, 1996. In addition, a public hearing will be held. Public notice will be given of the time and place of the meetings and hearing. The draft EIS will be available for public and agency review and comment prior to the public hearing. No formal scoping meeting is planned at this time.

To ensure that the full range of issues related to this proposed action are addressed and all significant issues identified, comments, and suggestions are invited from all interested parties. Comments or questions concerning this proposed action and the EIS should be directed to the FHWA at the address provided above. The views of agencies having knowledge about historic resources potentially affected by the proposal or interested in the effects of the project on historic properties are solicited.

(Catalog of Federal Domestic Assistance Program Number 20.205, Highway Planning and Construction. The regulations implementing Executive Order 12372 regarding intergovernmental consultation on Federal programs and activities apply to this program).

Issued on: July 19, 1996.

C. Glenn Clinton,

District Engineer, Sacramento, California.

[FR Doc. 96–18889 Filed 7–24–96; 8:45 am]

BILLING CODE 4910–22–M

National Highway Traffic Safety Administration

[Docket No. 96–40; Notice 2]

Decision That Nonconforming 1994 Mercedes-Benz E500 Passenger Cars Are Eligible for Importation

AGENCY: National Highway Traffic Safety Administration (NHTSA), DOT.

ACTION: Notice of decision by NHTSA that nonconforming 1994 Mercedes-Benz E500 passenger cars are eligible for importation.

SUMMARY: This notice announces the decision by NHTSA that 1994 Mercedes-Benz E500 passenger cars not originally manufactured to comply with all applicable Federal motor vehicle safety standards are eligible for importation into the United States because they are substantially similar to a vehicle originally manufactured for importation into and sale in the United States and certified by its manufacturer as complying with the safety standards (the U.S.-certified version of the 1994 Mercedes-Benz E500), and they are capable of being readily altered to conform to the standards.

DATES: This decision is effective July 25, 1996.

FOR FURTHER INFORMATION CONTACT: George Entwistle, Office of Vehicle Safety Compliance, NHTSA (202–366–5306).

SUPPLEMENTARY INFORMATION:

Background

Under 49 U.S.C. 30141(a)(1)(A) (formerly section 108(c)(3)(A)(i) of the National Traffic and Motor Vehicle Safety Act (the Act)), a motor vehicle that was not originally manufactured to conform to all applicable Federal motor vehicle safety standards shall be refused admission into the United States unless NHTSA has decided that the motor vehicle is substantially similar to a motor vehicle originally manufactured for importation into and sale in the United States, certified under 49 U.S.C. 30115 (formerly section 114 of the Act), and of the same model year as the model of the motor vehicle to be compared, and is capable of being readily altered to conform to all applicable Federal motor vehicle safety standards.

Petitions for eligibility decisions may be submitted by either manufacturers or importers who have registered with NHTSA pursuant to 49 CFR Part 592. As specified in 49 CFR 593.7, NHTSA publishes notice in the Federal Register of each petition that it receives, and affords interested persons an opportunity to comment on the petition. At the close of the comment period, NHTSA decides, on the basis of the petition and any comments that it has received, whether the vehicle is eligible for importation. The agency then publishes this decision in the Federal Register.

Champagne Imports, Inc. of Lansdale, Pennsylvania petitioned NHTSA to decide whether 1994 Mercedes-Benz E500 passenger cars are eligible for importation into the United States. NHTSA published notice of the petition on April 24, 1996 (61 FR 18188) to afford an opportunity for public comment. The reader is referred to that notice for a thorough description of the petition. No comments were received in response to the notice. Based on its review of the information submitted by the petitioner, NHTSA has decided to grant the petition.

Vehicle Eligibility Number for Subject Vehicles

The importer of a vehicle admissible under any final decision must indicate on the form HS–7 accompanying entry the appropriate vehicle eligibility number indicating that the vehicle is eligible for entry. VSP–163 is the vehicle eligibility number assigned to vehicles admissible under this decision.

Final Decision

Accordingly, on the basis of the foregoing, NHTSA hereby decides that a

1994 Mercedes-Benz E500 (Model ID 124.036) not originally manufactured to comply with all applicable Federal motor vehicle safety standards is substantially similar to a 1994 Mercedes-Benz E500 originally manufactured for importation into and sale in the United States and certified under 49 U.S.C. 30115, and is capable of being readily altered to conform to all applicable Federal motor vehicle safety standards.

Authority: 49 U.S.C. 30141 (a)(1)(A) and (b)(1); 49 CFR 593.8; delegations of authority at 49 CFR 1.50 and 501.8.

Issued on: July 19, 1996.

Marilynne Jacobs,

Director, Office of Vehicle Safety Compliance.

[FR Doc. 96–18955 Filed 7–24–96; 8:45 am]

BILLING CODE 4910–59–P

[Docket No. 96–75; Notice 1]

Notice of Receipt of Petition for Decision That Nonconforming 1993 Mercedes-Benz 600SEC and 1994–1996 Mercedes-Benz S600 Coupe Passenger Cars Are Eligible for Importation

AGENCY: National Highway Traffic Safety Administration, DOT.

ACTION: Notice of receipt of petition for decision that nonconforming 1993 Mercedes-Benz 600SEC and 1994–1996 Mercedes-Benz S600 Coupe passenger cars are eligible for importation.

SUMMARY: This notice announces receipt by the National Highway Traffic Safety Administration (NHTSA) of a petition for a decision that 1993 Mercedes-Benz 600SEC and 1994–1996 Mercedes-Benz S600 Coupe passenger cars that were not originally manufactured to comply with all applicable Federal motor vehicle safety standards are eligible for importation into the United States because (1) they are substantially similar to vehicles that were originally manufactured for importation into and sale in the United States and that were certified by their manufacturer as complying with the safety standards, and (2) they are capable of being readily altered to conform to the standards.

DATES: The closing date for comments on the petition is August 26, 1996.

ADDRESSES: Comments should refer to the docket number and notice number, and be submitted to: Docket Section, Room 5109, National Highway Traffic Safety Administration, 400 Seventh St., SW., Washington, DC 20590. [Docket hours are from 9:30 am to 4 pm]

FOR FURTHER INFORMATION CONTACT: George Entwistle, Office of Vehicle Safety Compliance, NHTSA (202–366–5306).

SUPPLEMENTARY INFORMATION:

Background

Under 49 U.S.C. 30141(a)(1)(A) (formerly section 108(c)(3)(A)(i)(I) of the National Traffic and Motor Vehicle Safety Act (the Act)), a motor vehicle that was not originally manufactured to conform to all applicable Federal motor vehicle safety standards shall be refused admission into the United States unless NHTSA has decided that the motor vehicle is substantially similar to a motor vehicle originally manufactured for importation into and sale in the United States, certified under 49 U.S.C. 30115 (formerly section 114 of the Act), and of the same model year as the model of the motor vehicle to be compared, and is capable of being readily altered to conform to all applicable Federal motor vehicle safety standards.

Petitions for eligibility decisions may be submitted by either manufacturers or importers who have registered with NHTSA pursuant to 49 CFR Part 592. As specified in 49 CFR 593.7, NHTSA publishes notice in the Federal Register of each petition that it receives, and affords interested persons an opportunity to comment on the petition. At the close of the comment period, NHTSA decides, on the basis of the petition and any comments that it has received, whether the vehicle is eligible for importation. The agency then publishes this decision in the Federal Register.

G&K Automotive Conversion, Inc. of Santa Ana, California (''G&K'') (Registered Importer No. R–90–007) has petitioned NHTSA to decide whether 1993 Mercedes-Benz 600SEC and 1994–1996 Mercedes-Benz S600 Coupe passenger cars are eligible for importation into the United States. The vehicles which G&K believes are substantially similar are the 1993 Mercedes-Benz 600SEC and 1994–1996 Mercedes-Benz S600 Coupe that were manufactured for importation into, and sale in the United States, and certified by their manufacturer, Daimler Benz, A.G., as conforming to all applicable Federal motor vehicle safety standards.

The petitioner contends that it carefully compared the non-U.S. certified 1993 Mercedes-Benz 600SEC and 1994–1996 Mercedes- Benz S600 Coupe to their U.S. certified counterparts, and found those vehicles to be substantially similar with respect to compliance with most applicable Federal motor vehicle safety standards.

G&K submitted information with its petition intended to demonstrate that the non-U.S. certified 1993 Mercedes-Benz 600SEC and 1994–1996 Mercedes-Benz S600 Coupe, as originally manufactured, conform to many Federal motor vehicle safety standards in the same manner as their U.S. certified counterparts, or are capable of being readily altered to conform to those standards.

Specifically, the petitioner claims that the non-U.S. certified 1993 Mercedes-Benz 600SEC and 1994–1996 Mercedes-Benz S600 Coupe are identical to their U.S. certified counterparts with respect to compliance with Standards Nos. 102 *Transmission Shift Lever Sequence* * * *., 103 *Defrosting and Defogging Systems,* 104 *Windshield Wiping and Washing Systems,* 105 *Hydraulic Brake Systems,* 106 *Brake Hoses,* 107 *Reflecting Surfaces,* 109 *New Pneumatic Tires,* 113 *Hood Latch Systems,* 116 *Brake Fluid,* 124 *Accelerator Control Systems,* 201 *Occupant Protection in Interior Impact,* 202 *Head Restraints,* 203 *Impact Protection for the Driver From the Steering Control System,* 204 *Steering Control Rearward Displacement,* 205 *Glazing Materials,* 206 *Door Locks and Door Retention Components,* 207 *Seating Systems,* 209 *Seat Belt Assemblies,* 210 *Seat Belt Assembly Anchorages,* 211 *Wheel Nuts, Wheel Discs and Hubcaps,* 212 *Windshield Retention,* 216 *Roof Crush Resistance,* 219 *Windshield Zone Intrusion,* and 302 *Flammability of Interior Materials.*

Petitioner also contends that the vehicles are capable of being readily altered to meet the following standards, in the manner indicated:

Standard No. 101 *Controls and Displays:* (a) inscription of the word ''Brake'' on the brake failure indicator lamp lens; (b) placement of the appropriate symbol on the seat belt warning lamp; (c) recalibration of the speedometer/odometer from kilometers to miles per hour.

Standard No. 108 *Lamps, Reflective Devices and Associated Equipment:* (a) installation of U.S.- model headlamp assemblies and front sidemarkers; (b) installation of U.S.- model taillamp assemblies which incorporate rear sidemarkers; (c) installation of a high mounted stop lamp.

Standard No. 110 *Tire Selection and Rims:* installation of a tire information placard.

Standard No. 111 *Rearview Mirrors:* replacement of the passenger side rear view mirror, which is convex, with a U.S.- model component.

Standard No. 114 *Theft Protection:* installation of a buzzer microswitch in the steering lock assembly, and a warning buzzer.

Standard No. 115 *Vehicle Identification Number:* installation of a

VIN plate that can be read from outside the left windshield pillar, and a VIN reference label on the edge of the door or latch post nearest the driver.

Standard No. 118 *Power Window Systems:* rewiring of the power window system so that the window transport is inoperative when the ignition is switched off.

Standard No. 208 *Occupant Crash Protection:* installation of a seat belt warning buzzer. The petitioner states that the vehicles are equipped with an automatic restraint system consisting of driver's and passenger's side air bags and knee bolsters. The petitioner further states that the vehicles are equipped with Type 2 seat belts in the front and rear outboard designated seating positions, and with a Type 1 seat belt in the rear center designated seating position.

Standard No. 214 *Side Impact Protection:* installation of door beams.

Standard No. 301 *Fuel System Integrity:* installation of a rollover valve in the fuel tank vent line between the fuel tank and the evaporative emissions collection canister.

Additionally, the petitioner states that the bumpers on the non-U.S. certified 1993 Mercedes-Benz 600SEC and 1994–1996 Mercedes-Benz S600 Coupe must be reinforced to comply with the Bumper Standard found in 49 CFR Part 581.

The petitioner further states that before the vehicle will be imported into the United States, its VIN will be inscribed on fourteen major car parts, and a theft prevention certification label will be affixed, in compliance with the Theft Prevention Standard in 49 CFR Part 541.

Interested persons are invited to submit comments on the petition described above. Comments should refer to the docket number and be submitted to: Docket Section, National Highway Traffic Safety Administration, Room 5109, 400 Seventh Street, S.W., Washington, DC 20590. It is requested but not required that 10 copies be submitted.

All comments received before the close of business on the closing date indicated above will be considered, and will be available for examination in the docket at the above address both before and after that date. To the extent possible, comments filed after the closing date will also be considered. Notice of final action on the petition will be published in the Federal Register pursuant to the authority indicated below.

Authority: 49 U.S.C. 30141(a)(1)(A) and (b)(1); 49 CFR 593.8; delegations of authority at 49 CFR 1.50 and 501.8.

Issued on: July 19, 1996.

Marilynne Jacobs,

Director, Office of Vehicle Safety Compliance.

[FR Doc. 96–18954 Filed 7–24–96; 8:45 am]

BILLING CODE 4910–59–P

Research and Special Programs Administration

[Notice No. 96–12]

Improving the Hazardous Materials Safety Program; Public Meeting Related to Regulatory Review and Customer Service

AGENCY: Research and Special Programs Administration (RSPA), DOT.

ACTION: Notice of public meeting.

SUMMARY: This notice announces a public meeting to be held in Sacramento, California to seek information from the public on regulatory reform and improved customer service for RSPA's hazardous materials safety program. This meeting is a continuation of the initial series of public outreach meetings held between April 19, 1995 and June 6, 1996. Interested persons are also reminded of a previously announced public meeting to be held in Atlanta, Georgia on September 12, 1996.

ADDRESSES: California State Department of Social Services Auditorium (Room 102), 744 P Street, Sacramento, California.

DATES: September 26, 1996 from 9:00 a.m. to 4:00 p.m.

FOR FURTHER INFORMATION CONTACT: Edmund J. Richards, Interagency Hazardous Materials Program Coordinator, (202) 366–0656; or Suezett Edwards, Training and Information Specialist, (202) 366–4900; Hazardous Materials Safety, RSPA, Department of Transportation, Washington, DC 20590–0001.

SUPPLEMENTARY INFORMATION: On March 4, 1995, President Clinton issued a memorandum to heads of departments and agencies calling for a review of all agency regulations to eliminate or revise those regulations that are outdated or in need of reform. In addition, the President directed front line regulators to ''* * * get out of Washington and create grassroots partnerships'' with people affected by agency regulations.

In response to the President's directive, RSPA performed an extensive review of the Hazardous Materials Regulations (HMR; 49 CFR Parts 171–180) and associated procedural rules (49 CFR Parts 106, 107 and 110). In April and July 1995, RSPA published notices in the Federal Register (60 FR 17049 and 60 FR 38888, respectively) that announced public meetings and requested comments on ways to improve the HMR and the kind and quality of services RSPA's customers expect. RSPA held 13 public meetings and received over 50 written comments in response to the Federal Register notices.

Based on its review of the HMR and on written and oral comments received from the public, RSPA has initiated eight separate rulemakings to eliminate or revise those regulations that have been identified as being outdated or in need of reform (Dockets HM–200, HM–207C, HM–207E, HM–216, HM–220A, HM–220B, HM–222A, HM–222B). Except for Docket HM–200, final rules have been issued as a result these rulemakings. These actions addressed various subjects such as training frequency, 24-hour emergency response telephone numbers, incident reporting, shipping papers, marking, labeling, and placarding, elimination of over 100 sections of the HMR, restructuring of the Hazardous Materials Table and Hazardous Substance Table, restructuring of the cylinder specifications and cylinder requalification requirements, and rail and highway modal requirements. In addition, RSPA has initiated a two-year pilot ticketing program to streamline and simplify enforcement of certain violations which do not have a direct impact on the safe transportation of hazardous materials, such as failure to register, obtain renewed exemptions in a timely manner, retain training records, and file incident reports. In the international area, RSPA has incorporated requirements for the transportation of radioactive materials that are compatible with the regulations of the International Atomic Energy Agency, and continued to adopt regulations towards harmonization with the United Nations Recommendations and other international regulatory bodies.

Significant actions have also been taken to improve management practices and operations. In 1995, RSPA implemented a toll-free number for obtaining assistance on the HMR, reporting potential violations of the regulations, and obtaining training materials. In response to comments to improve responses to inquiries, RSPA has made a commitment to respond to phone calls before the end of the next business day, and to mail training materials and publications in a timely manner.

Conduct of the Meeting

The meeting will be informal and is intended to produce a dialogue between agency personnel and persons affected by the hazardous materials safety programs. The meeting officer may find it necessary to limit the time allocated each speaker to ensure that all participants have an opportunity to speak. Conversely, the meeting may conclude before the time scheduled if all persons wishing to participate have been heard.

Atlanta Meeting

As announced in the Federal Register (61 FR 24529) on May 15, 1996, the public meeting in Atlanta on September 12, 1996 will be held at the Omni Hotel, 100 CNN Center beginning at 9:00 a.m.

Issued in Washington, D.C. on July 18, 1996.

Alan I. Roberts,

Associate Administrator for Hazardous Materials Safety.

[FR Doc. 96–18833 Filed 7–24–96; 8:45 am]

BILLING CODE 4910–60–P

[Notice No. 96–13]

Temporary Closure of the Dockets Unit

AGENCY: Research and Special Programs Administration (RSPA), DOT.

ACTION: Notice.

SUMMARY: This notice announces the temporary closure of RSPA's Dockets Unit, which contains hazardous materials and pipeline safety rulemaking and other dockets. Provision, however, is being made for public access to dockets in which comment periods are open or were recently closed and other dockets of current interest to the public. This closure is due to a cleaning project of the entire Nassif Building. RSPA expects its Dockets Unit to be closed for approximately three weeks starting August 12, 1996.

DATES: August 12, 1996 to September 3, 1996 (estimated).

FOR FURTHER INFORMATION CONTACT: For hazardous materials dockets, Ms. J. Suzanne Hedgepeth, Director, Office of Hazardous Materials Exemptions and Approvals, (202) 366–4535; Office of Hazardous Materials Safety, RSPA, Department of Transportation, Washington, DC 20590–0001. For pipeline safety dockets, Richard D. Huriaux, Director, Office of Technology and Standards, (202) 366–4565; Office of Pipeline Safety, RSPA, Department of Transportation, Washington, DC 20590–0001.

SUPPLEMENTARY INFORMATION: RSPA's Dockets Unit is located on the eighth floor of the Nassif Building, 400 7th Street, SW., Washington, DC. In an effort to improve the indoor air quality in the Nassif Building, the U.S. Department of Transportation and the building's owner have initiated a major cleaning project. This project entails a thorough cleaning of the building on a floor-by-floor basis. During the cleaning of each floor, the floor will be closed to employees and visitors. It is estimated that the cleaning of each floor will take approximately three weeks. During this three-week period, the offices on each floor will be closed and the affected employees will be relocated to another building. Once the cleaning of a floor is complete, employees and visitors may return to that floor. Cleaning of the Nassif Building's eighth floor is scheduled to begin on Monday, August 12, 1996. As a result, RSPA's Dockets Unit is scheduled to be closed for approximately three weeks.

Due to the massive volume of documents in the Dockets Unit and the short time period involved, RSPA has decided not to relocate the entire Dockets Unit. RSPA recognizes that this closure will present an inconvenience to the public. Although the public will be prevented from viewing most dockets during the cleaning project on the eighth floor, the public can still submit written comments on a particular rulemaking or exemption application by mailing comments to the Dockets Unit, Research and Special Programs Administration, U.S. Department of Transportation, Room 8421, 400 Seventh Street, SW., Washington, D.C. 20590–0001.

RSPA is taking steps to reduce the public inconvenience. It will provide public access to those rulemakings dockets in which the comment period will be open during, and those in which the comment will have closed just prior to, the closure of the Dockets Unit. Each of those dockets will be available for public review in an alternate location in the Nassif Building from August 12, 1996, until the Dockets Unit is reopened.

The hazardous materials dockets available to the public will be located in Room 5414A of the Nassif Building. These will include HM–181H (Performance Oriented Packaging Standards), HM–200 (Intrastate Transportation of Hazardous Materials), HM–223 (Applicability of the Hazardous Materials Regulations to Loading, Unloading and Storage), HM–224 (Temporary Prohibition of Oxygen Generators in Air Commerce) and any new docket opened before the reopening of the Dockets Unit.

The pipeline safety dockets available to the public will be located in Room 2335 of the Nassif Building. These will include PS–94 (Qualification of Pipeline Personnel), PS–118 (Excess Flow Valve Performance Standard), PS–118A (Excess Flow Valves—Customer Notification), PS–121 (Pressure Testing of Older Hazardous Liquid Pipelines), PS–140(e) (Areas Unusually Sensitive to Environmental Damage), PS–144 (Risk-Based Alternatives to Pressure Testing Rule), P–96–8W (CNG Transmission; Petition for Waiver), and any new docket opened before the reopening of the Dockets Unit.

Requests for the availability of any other dockets during this period should immediately be made to the contact persons listed above.

The public may view these dockets between the hours of 8:30 a.m. and 5:30 p.m., Monday through Friday except Federal holidays.

Issued in Washington, DC on July 19, 1996.

Alan I. Roberts,

Associate Administrator for Hazardous Materials Safety.

[FR Doc. 96–18951 Filed 7–24–96; 8:45 am]

BILLING CODE 4910–60–P

Surface Transportation Board [1]

[STB Finance Docket No. 32981]

The Northern Vermont Railroad Company Incorporated; Acquisition and Operation Exemption; Lines of Canadian Pacific Limited

The Northern Vermont Railroad Company Incorporated (NV), a noncarrier, has filed a notice of exemption to acquire from Canadian Pacific Limited, doing business as CP Rail System, approximately 86.41 miles of rail line located in Franklin, Orleans, Caledonia, and Orange Counties, VT, as follows: (1) A portion of the Newport Subdivision between the U.S.-Canadian border crossings at milepost 26.25 and milepost 32.63 (running through Richford VT); (2) a portion of the Newport Subdivision between the border crossing at milepost 43.32 and the end of the subdivision at Newport (milepost 58.4); (3) the Lyndonville Subdivision, extending between Newport (milepost 0.0) and Wells River,

[1] The ICC Termination Act of 1995, Pub. L. 104–88, 109 Stat. 803 (ICCTA), which was enacted on December 29, 1995, and took effect on January 1, 1996, abolished the Interstate Commerce Commission and transferred certain functions to the Surface Transportation Board (Board). This notice relates to functions that are subject to Board jurisdiction pursuant to 49 U.S.C. 10901.

VT (milepost 63.78); and (4) a portion of the former Beebe Subdivision, between mileposts 39.04 and 40.21, in or near Newport, VT. The transaction is expected to be consummated as soon as practicable after the exemption is effective and all conditions precedent have been satisfied.[2]

This proceeding is related to STB Finance Docket No. 32982, *Iron Road Railways Incorporated, Benjamin F. Collins, John F. Depodesta, Daniel Sabin, and Robert T. Schmidt—Control Exemption—Bangor and Aroostook Railroad Company, Canadian American Railroad Company, Iowa Northern Railway Company, and The Northern Vermont Railroad Company Incorporated,* wherein Iron Road Railways Incorporated and certain noncarrier individuals have filed a petition for exemption to continue to control NV and three other rail carriers upon NV becoming a carrier.

Any comments must be filed with: Office of the Secretary, Case Control Branch, Surface Transportation Board, 1201 Constitution Avenue, NW., Washington, DC 20423 and applicant's representative: David A. Hirsh, Harkins Cunningham, 1300 19th Street, NW., Suite 600, Washington, DC 20036.

This notice is filed under 49 CFR 1150.31. If the notice contains false or misleading information, the exemption is void *ab initio.* Petitions to revoke the exemption under 49 U.S.C. 10502(d) may be filed at any time. The filing of a petition to revoke will not automatically stay the transaction.

Decided: July 19, 1996.

By the Board, David M. Konschnik, Director, Office of Proceedings.

Vernon A. Williams,

Secretary.

[FR Doc. 96–18908 Filed 7–24–96; 8:45 am]

BILLING CODE 4915–00–P

[2] This notice of exemption was filed on June 7, 1996, and was scheduled to become effective 7 days later.

[1] The ICC Termination Act of 1995, Pub. L. No. 104–88, 109 Stat. 803, which was enacted on December 29, 1995, and took effect on January 1, 1996, abolished the Interstate Commerce Commission and transferred certain functions to the Surface Transportation Board (Board). This notice relates to functions that are subject to Board jurisdiction pursuant to 49 U.S.C. 11323–24.

[STB Finance Docket No. 32996]

St. Louis Southwestern Railway Company—Trackage Rights Exemption—SPCSL Corp.

SPCSL Corp. has agreed to grant local and overhead trackage rights to St. Louis Southwestern Railway Company over rail lines beginning at a point at or near milepost CSL 281 (''Q'' Tower) and extending southerly 6.2 miles to milepost CSL 287.2 in the vicinity of Church, IL, and southwesterly 2.84 miles to milepost MM 641.96 in the vicinity of Tolson, IL. The total trackage rights over both routes is approximately 9.04 miles. The trackage rights were to become effective on or after July 12, 1996.

This notice is filed under 49 CFR 1180.2(d)(7). If the notice contains false or misleading information, the exemption is void *ab initio.* Petitions to revoke the exemption under 49 U.S.C. 10502(d) may be filed at any time. The filing of a petition to revoke will not stay the transaction.

An original and 10 copies of all pleadings, referring to STB Finance Docket No. 32996, must be filed with the Surface Transportation Board, Office of the Secretary, Case Control Branch, 1201 Constitution Avenue, NW., Washington, DC 20423 and served on: Louis E. Gitomer, Ball Janik LLP, 1455 F Street, NW., Suite 225, Washington, DC 20005.

As a condition to this exemption, any employees affected by the trackage rights will be protected by the conditions imposed in *Norfolk and Western Ry. Co.—Trackage Rights—BN,* 354 I.C.C. 605 (1978), as modified in *Mendocino Coast Ry., Inc.—Lease and Operate,* 360 I.C.C. 653 (1980).

Decided: July 17, 1996.

By the Board, David M. Konschnik, Director, Office of Proceedings.

Vernon A. Williams,

Secretary.

[FR Doc. 96–18911 Filed 7–24–96; 8:45 am]

BILLING CODE FR–4915–00–P

[1] The ICC Termination Act of 1995, Pub. L. No. 104–88, 109 Stat. 803, which was enacted on December 29, 1995, and took effect on January 1, 1996, abolished the Interstate Commerce Commission (ICC) and transferred certain functions to the Surface Transportation Board (Board). This notice relates to functions that are subject to Board jurisdiction pursuant to 49 U.S.C. 11323.

[STB Finance Docket No. 32959 (Sub-No. 1)]

Union Pacific Railroad Company; Trackage Rights Exemption; Chicago, Central & Pacific Railroad Company

AGENCY: Surface Transportation Board, DOT.

ACTION: Notice of exemption.

SUMMARY: The Board, under 49 U.S.C. 10502, exempts the trackage rights described in STB Finance Docket No. 32959[2] to permit the trackage rights to expire on August 1, 1996, in accordance with the agreement of the parties.[3]

DATES: This exemption is effective on August 9, 1996. Petitions to reopen must be filed by August 14, 1996.

ADDRESSES: Send pleadings, referring to STB Finance Docket No. 32959 (Sub-No. 1), to: (1) Surface Transportation Board, Office of the Secretary, Case Control Branch, 1201 Constitution Avenue, N.W., Washington, DC 20423; (2) Joseph D. Anthofer, Union Pacific Railroad Company, 1416 Dodge Street, Room 830, Omaha, NE 68179; and (3) William C. Sippel, Two Prudential Plaza, 45th Floor, 180 North Stetson Avenue, Chicago, IL 60601.

FOR FURTHER INFORMATION CONTACT: Beryl Gordon, (202) 927–5660. [TDD for the hearing impaired: (202) 927–5721.]

SUPPLEMENTARY INFORMATION: Additional information is contained in the Board's decision. To purchase a copy of the full decision, write to, call, or pick up in person from: DC News & Data, Inc., Room 2229, 1201 Constitution Avenue, N.W., Washington, DC 20423. Telephone: (202) 289 4357/4359. [Assistance for the hearing impaired is available through TDD services (202) 927–5721.]

Decided: July 12, 1996.

By the Board, Chairman Morgan, Vice Chairman Simmons, and Commissioner Owen.

Vernon A. Williams,

Secretary.

[FR Doc. 96–18910 Filed 7–24–96; 8:45 am]

BILLING CODE 4915–00–P

[2] In *Union Pacific Railroad Company—Trackage Rights Exemption—Chicago, Central and Pacific Railroad Company,* STB Finance Docket No. 32959 (STB served May 31, 1996), Chicago, Central & Pacific Railroad Company (CCP) agreed to grant overhead trackage rights to Union Pacific Railroad Company (UP) in a north-south direction from the point of switch of the connection at CCP milepost 455.8, near Arion, to the point of switch of the connection at CCP milepost 512.2, near Council Bluffs, IA, a distance of approximately 56.4 miles.

The trackage rights arrangement was necessary because of the rehabilitation of UP's parallel line between Council Bluffs and Arion, IA. The trackage rights have enabled UP to provide uninterrupted rail service and have alleviated congestion during the repair of its track.

[3] Trackage rights normally remain in effect unless discontinuance authority or approval of a new agreement is sought. See *Milford-Bennington Railroad Company, Inc.—Trackage Rights Exemption—Boston and Maine Corporation and Springfield Terminal Railway Company,* Finance Docket No. 32103 (ICC served Sept. 3, 1993).

[Docket No. AB–167 (Sub-No. 1156X)]

Consolidated Rail Corporation—Abandonment Exemption—in Lebanon County, PA

AGENCY: Surface Transportation Board.

ACTION: Notice of exemption.

SUMMARY: The Board exempts from the prior approval requirements of 49 U.S.C. 10903–04 the abandonment by Consolidated Rail Corporation of 3.2 miles of rail line in Lebanon County, PA, subject to trail use, public use, and standard labor protective conditions.

DATES: Provided no formal expression of intent to file an offer of financial assistance (OFA) has been received, this exemption will be effective on August 24, 1996. Formal expressions of intent to file an OFA under 49 CFR 1152.27(c)(2)[2] and requests for interim trail use/rail banking under 49 CFR 1152.29 must be filed by August 5, 1996, petitions to stay must be filed by August 9, 1996, and petitions to reopen must be filed by August 19, 1996.

ADDRESSES: Send pleadings referring to Docket No. AB–167 (Sub-No. 1156X) to: (1) Surface Transportation Board, Office of the Secretary, Case Control Branch, 1201 Constitution Avenue, NW., Washington, DC 20423, and (2) Petitioner's representative: John J. Paylor, Consolidated Rail Corporation, 2001 Market St.—16A, Philadelphia, PA 19101–1416.

FOR FURTHER INFORMATION CONTACT: Beryl Gordon, (202) 927–5660. [TDD for the hearing impaired: (202) 927–5721.]

SUPPLEMENTARY INFORMATION: Additional information is contained in the Board's decision. To purchase a copy of the full decision, write to, call, or pick up in person from: DC News & Data, Inc., Room 2229, 1201 Constitution Avenue, NW., Washington, DC 20423. Telephone: (202) 289–4357/4359. [Assistance for the hearing impaired is available through TDD services (202) 927–5721.]

Decided: July 11, 1996.

F4703
F4703
F4703
F4703
F4703
F4703
Commission (ICC) and transferred certain functions and proceedings to the Surface Transportation Board (Board). Section 204(b)(1) of the ICCTA provides, in general, that proceedings pending before the ICC on the effective date of that legislation shall be decided under the law in effect prior to January 1, 1996, insofar as they involve functions retained by the ICCTA. This notice relates to a proceeding that was pending with the ICC prior to January 1, 1996, and to functions that are subject to Board jurisdiction pursuant to 49 U.S.C. 10903. Therefore, this notice applies the law in effect prior to the ICCTA, and citations are to the former sections of the statute, unless otherwise indicated.

[2] See Exempt. of Rail Abandonment—Offers of Finan. Assist., 4 I.C.C.2d 164 (1987).

By the Board, Chairman Morgan, Vice Chairman Simmons, and Commissioner Owen.

Vernon A. Williams,

Secretary.

[FR Doc. 96–18906 Filed 7–24–96; 8:45 am]

BILLING CODE 4915–00–P

[STB Docket No. AB–167 (Sub-No. 1158X)]

Consolidated Rail Corporation; Abandonment Exemption—in Hudson County, NJ

In the Matter of an Offer of Financial Assistance.

AGENCY: Surface Transportation Board, DOT.

ACTION: Notice of exemption.

SUMMARY: The Board exempts from the prior approval requirements of 49 U.S.C. 10903 the abandonment by Consolidated Rail Corporation of approximately 0.90 miles of rail line between milepost 0.00 and milepost 0.90 in Hudson County, NJ, subject to standard labor protective conditions.

G.A.C. Kearny, Inc., has filed a formal offer of financial assistance (OFA) to purchase a portion of the line extending between milepost 0.00 and milepost 0.44. Therefore, the effective date of the exemption authorizing abandonment as to this portion of the line will be postponed pending completion of the OFA process.

DATES: Provided no formal expression of intent to file an OFA has been received, this exemption will be effective on August 9, 1996. Formal expressions of intent to file an OFA under 49 CFR 1152.27(c)(2),[2] petitions to stay, and requests for a public use condition conforming to 49 CFR 1152.28(a)(2) must be filed by August 5, 1996. Petitions to reopen must be filed by August 19, 1996.

ADDRESSES: Send pleadings referring to STB Docket No. AB–167 (Sub-No. 1158X) to: (1) Surface Transportation Board, Office of the Secretary, Case Control Branch, 1201 Constitution Avenue, NW., Washington, DC 20423, and (2) Petitioner's representative: John J. Paylor, Consolidated Rail Corporation, 2001 Market St., 16A, Philadelphia, PA 19101–1416.

[1] The ICC Termination Act of 1995, Public Law 104–88, 109 Stat. 803, which was enacted on December 29, 1995, and took effect on January 1, 1996, abolished the Interstate Commerce Commission and transferred certain functions and proceedings to the Surface Transportation Board (Board). This notice relates to functions that are subject to Board jurisdiction pursuant to 49 U.S.C. 10903.

[2] See Exempt. of Rail Abandonment—Offers of Finan. Assist., 4 I.C.C.2d 164 (1987).

FOR FURTHER INFORMATION CONTACT: Beryl Gordon, (202) 927–5660. [TDD for the hearing impaired: (202) 927–5721.]

SUPPLEMENTARY INFORMATION: Additional information is contained in the Board's decision. To purchase a copy of the full decision, write to, call, or pick up in person from: DC News & Data, Inc., Room 2229, 1201 Constitution Ave., NW., Washington, DC 20423. Telephone: (202) 289–4357/4359. [Assistance for the hearing impaired is available through TDD services (202) 927–5721.]

Decided: July 18, 1996.

By the Board, Chairman Morgan, Vice Chairman Simmons, and Commissioner Owen.

Vernon A. Williams,

Secretary.

[FR Doc. 96–18907 Filed 7–24–96; 8:45 am]

BILLING CODE 4915–00–P

[Docket No. AB–385 (Sub-No. 2X)]

Georgia Southwestern Division, South Carolina Central Railroad; Abandonment Exemption; Between Preston and Omaha, GA

AGENCY: Surface Transportation Board.

ACTION: Notice of exemption.

SUMMARY: The Board, under 49 U.S.C. 10505, exempts from the prior approval requirements of 49 U.S.C. 10903–04, the abandonment by the Georgia Southwestern Division, South Carolina Central Railroad of a 40-mile segment of rail line between milepost 713 at Preston and milepost 753 at Omaha in Webster and Stewart Counties, GA, subject to environmental conditions and standard labor protective conditions.

DATES: Provided no formal expression of intent to file an offer of financial assistance (OFA) has been received, this exemption will be effective August 24, 1996. Formal expressions of intent to file an OFA under 49 CFR 1152.27(c)(2)

[1] The ICC Termination Act of 1995, Pub. L. No. 104–88, 109 Stat. 803 (ICCTA), which was enacted on December 29, 1995, and took effect on January 1, 1996, abolished the Interstate Commerce Commission (ICC) and transferred certain functions and proceedings to the Surface Transportation Board (Board). Section 204(b)(1) of the ICCTA provides, in general, that proceedings pending before the ICC on the effective date of that legislation shall be decided under the law in effect prior to January 1, 1996, insofar as they involve functions retained by the ICCTA. This notice relates to a proceeding that was pending with the ICC prior to January 1, 1996, and to functions that are subject to Board jurisdiction pursuant to 49 U.S.C. 10502 and 10903–04. Therefore, this notice applies the law in effect prior to the ICCTA, and citations are to the former sections of the statute, unless otherwise indicated.

must be filed by August 5, 1996.[2] Petitions to stay must be filed by August 9, 1996. Requests for a public use condition conforming to 49 CFR 1152.28(a)(2) must be filed by August 14, 1996. Petitions to reopen must be filed by August 19, 1996.

ADDRESSES: Send pleadings referring to Docket No. AB–385 (Sub-No. 2X) to: (1) Office of the Secretary, Case Control Branch, Surface Transportation Board, 1201 Constitution Avenue, NW., Washington, DC 20423; and (2) Petitioner's representative: Michael W. Blaszak, 211 South Leitch Avenue, LaGrange, IL 60525–2162.

FOR FURTHER INFORMATION CONTACT: Joseph H. Dettmar, (202) 927–5660. [TDD for the hearing impaired: (202) 927–5721.]

SUPPLEMENTARY INFORMATION: Additional information is contained in the Board's decision. To purchase a copy of the full decision, write to, call or pick up in person from: DC News and Data, Inc., Room 2229, 1201 Constitution Avenue, NW., Washington, DC 20423. Telephone: (202) 289–4357/4359. [Assistance for the hearing impaired is available through TDD services (202) 927–5721.]

Decided: July 12, 1996.

By the Board, Chairman Morgan, Vice Chairman Simmons, and Commissioner Owen.

Vernon A. Williams,

Secretary.

[FR Doc. 96–18909 Filed 7–24–96; 8:45 am]

BILLING CODE 4915–00–P

DEPARTMENT OF THE TREASURY

Submission to OMB for Review; Comment Request

July 17, 1996.

The Department of Treasury has submitted the following public information collection requirement(s) to OMB for review and clearance under the Paperwork Reduction Act of 1995, Public Law 104–13. Copies of the submission(s) may be obtained by calling the Treasury Bureau Clearance Officer listed. Comments regarding this information collection should be addressed to the OMB reviewer listed and to the Treasury Department Clearance Officer, Department of the Treasury, Room 2110, 1425 New York Avenue, NW., Washington, DC 20220.

Internal Revenue Service (IRS)

OMB Number: 1545–0256.

Form Number: IRS Forms 941c and 941cPR.

Type of Review: Extension.

Title: Supporting Statement To Correct Information (941c), Planilla Para La Correccion De Informacion (941cPR).

Description: Used by employers to correct previously reported FICA or income tax data. It may be used to support a credit or adjustment claimed on a current return for an error in a prior return period. The information is used to reconcile wages and taxes previously reported or used to support a claim for refund, credit, or adjustment of FICA or income tax.

Respondents: Business or other for profit, Not-for-profit institutions, State, Local or Tribal Government.

Estimated Number of Respondents/Recordkeepers: 958,050.

Estimated Burden Hours Per Respondent/Recordkeeper:

	Form 941c	Form 941cPR
Recordkeeping	8 hr., 51 min	7 hr., 25 min.
Learning about the law or the form	6 min	6 min.
Preparing the form	15 min	13 min.

Frequency of Response: On occasion.

Estimated Total Reporting/Recordkeeping Burden: 8,728,727 hours.

Clearance Officer: Garrick Shear (202) 622–3869, Internal Revenue Service, Room 5571, 1111 Constitution Avenue, NW., Washington, DC 20224.

OMB Reviewer: Milo Sunderhauf (202) 395–7340,Office of Management and Budget, Room 10226, New Executive Office Building, Washington, DC 20503.

Dale A. Morgan,

Departmental Reports Management Officer.

[FR Doc. 96–18865 Filed 7–24–96; 8:45 am]

BILLING CODE 4830–01–P

Submission for OMB Review; Comment Request

July 16, 1996.

The Department of Treasury has submitted the following public information collection requirement(s) to OMB for review and clearance under the Paperwork Reduction Act of 1995, Public Law 104–13. Copies of the submission(s) may be obtained by calling the Treasury Bureau Clearance Officer listed. Comments regarding this information collection should be addressed to the OMB reviewer listed and to the Treasury Department Clearance Officer, Department of the Treasury, Room 2110, 1425 New York Avenue, NW., Washington, DC 20220.

Special Request: In order to conduct the survey described below in the August/September 1996 time frame, the Department of Treasury is requesting that the Office of Management and Budget (OMB) review and approve this information collection by July 25, 1996. To obtain a copy of this survey, please contact the IRS Clearance Officer at the address listed below.

Interal Revenue Service (IRS)

OMB Number: 1545–1349.

Project Number: SOI–18.

Type of Review: Revision.

Title: Automated Customer Survey Payoff Application.

Description: The Internal Revenue Service (IRS) has developed the automated Payoff Telephone Application. It provides callers with the payoff amounts for overdue taxes, including interest and penalties, for seven days from the date of the call. This application offers taxpayer assistance interactively, without assistor involvement. The purpose of the survey is to assess the level of ease and satisfaction with using the Payoff application.

Respondents: Individuals or households.

Estimated Number of Respondents: 840.

Estimated Burden Hours Per Respondent: 2 minutes.

Frequency of Response: Other.

Estimated Total Reporting Burden: 28 hours.

Clearance Officer: Garrick Shear (202) 622–3869, Internal Revenue Service, Room 5571, 1111 Constitution Avenue, N.W., Washington, DC 20224.

OMB Reviewer: Milo Sunderhauf (202) 395–7340, Office of Management

[2] *See Exempt. of Rail Abandonment—Offers of Finan. Assist.,* 4 I.C.C.2d 164 (1987).

and Budget, Room 10226, New Executive Office Building, Washington, DC 20503.

Dale A. Morgan,

Departmental Reports Management Officer.

[FR Doc. 96–18866 Filed 7–24–96; 8:45 am]

BILLING CODE 4830–01–P

Submission for OMB Review; Comment Request

July 16, 1996.

The Department of Treasury has submitted the following public information collection requirement(s) to OMB for review and clearance under the Paperwork Reduction Act of 1995, Public Law 104–13. Copies of the submission(s) may be obtained by calling the Treasury Bureau Clearance Officer listed. Comments regarding this information collection should be addressed to the OMB reviewer listed and to the Treasury Department Clearance Officer, Department of the Treasury, Room 2110, 1425 New York Avenue, NW., Washington, DC 20220.

Special Request: In order to conduct the survey described below in the August/September 1996 time frame, the Department of Treasury is requesting that the Office of Management and Budget (OMB) review and approve this information collection by July 25, 1996. To obtain a copy of this survey, please contact the IRS Clearance Officer at the address listed below.

Internal Revenue Service (IRS)

OMB Number: 1545–1349.

Project Number: SOI–19.

Type of Review: Revision.

Title: 1996 Transcript Application Customer Satisfaction Survey.

Description: The Internal Revenue Service (IRS) has developed the automated Transcript Telephone Application. The purpose of the survey is to assess the level of ease and satisfaction with using the Transcript application.

Respondents: Individuals or households.

Estimated Number of Respondents: 1,075.

Estimated Burden Hours Per Respondent: 1½ minutes.

Frequency of Response: Other.

Estimated Total Reporting Burden: 27 hours.

Clearance Officer: Garrick Shear, (202) 622–3869, Internal Revenue Service, Room 5571, 1111 Constitution Avenue, N.W., Washington, DC 20224.

OMB Reviewer: Milo Sunderhauf, (202) 395–7340, Office of Management and Budget, Room 10226, New Executive Office Building, Washington, DC 20503.

Dale A. Morgan,

Departmental Reports Management Officer.

[FR Doc. 96–18867 Filed 7–24–96; 8:45 am]

BILLING CODE 4830–01–P

Submission for OMB Review; Comment Request

July 16, 1996.

The Department of Treasury has submitted the following public information collection requirement(s) to OMB for review and clearance under the Paperwork Reduction Act of 1995, Public Law 104–13. Copies of the submission(s) may be obtained by calling the Treasury Bureau Clearance Officer listed. Comments regarding this information collection should be addressed to the OMB reviewer listed and to the Treasury Department Clearance Officer, Department of the Treasury, Room 2110, 1425 New York Avenue, NW., Washington, DC 20220.

Special Request: In order to conduct the survey described below in the August/September 1996 time frame, the Department of Treasury is requesting that the Office of Management and Budget (OMB) review and approve this information collection by July 25, 1996. To obtain a copy of this survey, please contact the IRS Clearance Officer at the address listed below.

Internal Revenue Service (IRS)

OMB Number: 1545–1349.

Project Number: SOI–20.

Type of Review: Revision.

Title: Voice Processing Personal Identification Number Customer Satisfaction Survey.

Description: The Internal Revenue Service (IRS) has developed the automated Voice Processing Identification Number (VPPIN) Telephone Application. The application will allow callers to enter or establish a personal identification number (PIN) required for identity authentication. The purpose of the survey is to assess the level of ease and satisfaction with the VPPIN application.

Respondents: Individuals or households.

Estimated Number of Respondents: 840.

Estimated Burden Hours Per Respondent: 1½ minutes.

Frequency of Response: Other.

Estimated Total Reporting Burden: 21 hours.

Clearance Officer: Garrick Shear (202) 622–3869, Internal Revenue Service, Room 5571, 1111 Constitution Avenue, N.W., Washington, DC 20224.

OMB Reviewer: Milo Sunderhauf (202) 395–7340, Office of Management and Budget, Room 10226, New Executive Office Building, Washington, DC 20503.

Dale A. Morgan,

Departmental Reports Management Officer.

[FR Doc. 96–18868 Filed 7–24–96; 8:45 am]

BILLING CODE 4830–01–P

Submission to OMB for Review; Comment Request

July 17, 1996.

The Department of Treasury has submitted the following public information collection requirement(s) to OMB for review and clearance under the Paperwork Reduction Act of 1995, Public Law 104–13. Copies of the submission(s) may be obtained by calling the Treasury Bureau Clearance Officer listed. Comments regarding this information collection should be addressed to the OMB reviewer listed and to the Treasury Department Clearance Officer, Department of the Treasury, Room 2110, 1425 New York Avenue, NW., Washington, DC 20220.

Internal Revenue Service (IRS)

OMB Number: 1545–0001.

Form Number: IRS Form CT–1.

Type of Review: Extension.

Title: Employer's Annual Railroad Retirement Tax Return.

Description: Railroad employers are required to file an annual return to report employer and employee Railroad Retirement Tax Act (RRTA). Form CT–1 is used for this purpose. The Internal Revenue Service uses the information to insure that the employer has paid the correct tax.

Respondents: Business or other for-profit, not-for-profit institutions, State, Local or Tribal Government.

Estimated Number of Respondents/Recordkeepers: 2,387.

Estimated Burden Hours Per Respondent/Recordkeeper:

	CT–1 Part I	CT–1 Part II
Recordkeeping	9 hr., 34 min.	3 hr., 7 min.
Learning about the law or the form	2 hr., 23 min.	0 hr., 0 min.

	CT–1 Part I	CT–1 Part II
Preparing, copying, assembling, and sending the form to the IRS	6 hr., 15 min.	0 hr., 3 min.

Frequency of Response: Annually.

Estimated Total Reporting/Recordkeeping Burden: 49,123 hours.

Clearance Officer: Garrick Shear (202) 622–3869, Internal Revenue Service, Room 5571, 1111 Constitution Avenue, N.W., Washington, DC 20224.

OMB Reviewer: Milo Sunderhauf (202) 395–7340, Office of Management and Budget, Room 10226, New Executive Office Building, Washington, DC 20503.

Dale A. Morgan,

Departmental Reports Management Officer.

[FR Doc. 96–18934 Filed 7–24–96; 8:45 am]

BILLING CODE 4830–01–P

DEPARTMENT OF TREASURY

Customs Service

Announcement of Outbound Manifest and Shippers Export Declaration Compliance Workshops

AGENCY: U.S. Customs Service, Department of Treasury.

ACTION: Notice of Workshops.

SUMMARY: This document notifies members of the trade community of the plans of the Customs Service and the Bureau of Census to implement significant outreach and educational programs. These programs are designed to help exporters improve the completeness, timeliness and accuracy of the outbound manifest and the Shippers Export Declaration (SED) information they file with Customs. Recent monitoring has indicated that a significantly low level of compliance exists. Workshops will be presented by Customs and Census in various ports of entry during the upcoming months. The locations and times of the individual workshops will be announced by the local ports at a later date. Because Customs and Census are committed to being customer-driven organizations, workshops will be presented prior to the increase of enforcement efforts.

SUPPLEMENTARY INFORMATION: The Customs Service and the Census Bureau are committed to being customer driven organizations. As such, we are seeking to notify members of the trade community of the development of our plans to implement significant outreach and educational programs designed to improve the completeness, timeliness, and accuracy of outbound manifest and SED information. In addition, this notice outlines our plans to inform the trade community of their responsibilities related to exports.

The Outbound Process is one of the core business processes of the U.S. Customs Service. This process is designed to facilitate international trade while achieving the highest degree of compliance with U.S. export requirements in order to protect the U.S. national security, its economic interests, and the health and safety of the American people.

While monitoring the Outbound process the Customs Service, in cooperation with the Bureau of the Census, compared a sample of outbound vessel manifests and Shippers Export Declarations (SEDs) with the actual cargo loaded. Results indicate that a significantly low level of compliance exists. In many instances, cargo is not being included on the manifest of the vessel actually carrying it, but rather on the manifest of a vessel departing later. Exporters, Freight Forwarders, NVOCCs and Carriers are creating manifests that reflect only the SEDs that they have at hand, rather than the actual cargo on the vessel.

In addition, the Customs Service and the Bureau of the Census are concerned that an increasing number of SEDs are deficient when filed. The agencies find as many as one out of every two paper SEDs contains errors of omission or commission.

These practices hinder Customs in its efforts to detect violations of export laws. They also result in inaccuracies in the trade statistics. Since these statistics are utilized in sensitive trade negotiations and important economic policy decisions, accuracy is critical.

The principal cause of these problems are the failures of exporters and forwarders to provide complete and accurate SEDs to exporting carriers prior to exportation. As a result of the Outbound Manifest Survey, the Customs Service and the Census Bureau jointly issued Foreign Trade Statistics Regulation letter number 165, dated March 12, 1996 stating our concern and spelling out the responsibilities of the various parties to the export transactions.

Both the Customs Service and Census Bureau feel that before any increased enforcement actions are taken, we should instruct the trade community in their responsibilities at outbound compliance workshops. The agencies anticipate that such workshops will begin approximately 30 days after release of this notice. These workshops will review problems currently encountered with the reported data, present general results of the Outbound Manifest Survey, cover specific outbound regulations and requirements, provide an overview of the Outbound Process review, and provide information on the Automated Export System (AES).

In addition, the workshops will outline the specific actions and programs being developed to increase the level of outbound manifest and SED compliance. Customs and Census will be presenting these workshops in various ports of entry during the upcoming months.

After an appropriate period of time, estimated to be 60 days from the start of the outbound workshops, Customs and Census efforts to increase manifest and SED compliance will begin. This will allow the trade community time to review internal document preparation and filing processes and practices and to implement any necessary changes required to improve compliance.

Dated: July 3, 1996.

Peter J. Baish,

Outbound Process Owner, U.S. Customs Service.

[FR Doc. 96–18893 Filed 7–24–96; 8:45 am]

BILLING CODE 4820–02–P

federal register

Thursday
July 25, 1996

Part II

Department of Agriculture

Food Safety and Inspection Service

9 CFR Part 304, et al.

Pathogen Reduction; Hazard Analysis and Critical Control Point (HACCP) Systems; Final Rule

DEPARTMENT OF AGRICULTURE

Food Safety and Inspection Service

9 CFR Parts 304, 308, 310, 320, 327, 381, 416, and 417

[Docket No. 93–016F]

RIN 0583–AB69

Pathogen Reduction; Hazard Analysis and Critical Control Point (HACCP) Systems

AGENCY: Food Safety and Inspection Service, USDA.

ACTION: Final rule with request for comments.

SUMMARY: The Food Safety and Inspection Service (FSIS) is establishing requirements applicable to meat and poultry establishments designed to reduce the occurrence and numbers of pathogenic microorganisms on meat and poultry products, reduce the incidence of foodborne illness associated with the consumption of those products and provide a new framework for modernization of the current system of meat and poultry inspection. The new regulations (1) require that each establishment develop and implement written sanitation standard operating procedures (Sanitation SOP's); (2) require regular microbial testing by slaughter establishments to verify the adequacy of the establishments' process controls for the prevention and removal of fecal contamination and associated bacteria; (3) establish pathogen reduction performance standards for *Salmonella* that slaughter establishments and establishments producing raw ground products must meet; and (4) require that all meat and poultry establishments develop and implement a system of preventive controls designed to improve the safety of their products, known as HACCP (Hazard Analysis and Critical Control Points).

DATES: *Effective Date:* July 25, 1996, however these rules are not applicable until the dates listed below.

Applicability dates: (1) The HACCP regulations set forth in 9 CFR Part 417 and related provisions set forth in 9 CFR 304, 327, and 381 parts will be applicable as follows:

- In large establishments, defined as all establishments with 500 or more employees, on January 26, 1998.
- In smaller establishments, defined as all establishments with 10 or more employees but fewer than 500, on January 25, 1999.
- In very small establishments, defined as all establishments with fewer than 10 employees *or* annual sales of less than $2.5 million, on January 25, 2000.

(2) The Sanitation SOP's regulations set forth in 9 CFR 416 will be applicable on January 27, 1997.

(3) The *E. coli* process control testing regulations set forth in 9 CFR 310.25(a) and 381.94(a) will be applicable on January 27, 1997.

(4) The *Salmonella* pathogen reduction performance standards regulations set forth in 9 CFR 310.25(b) and 9 CFR 381.94(b) will be applicable simultaneously with applicability dates for implementation of HACCP.

Comments: Comments on specified technical aspects of the final regulations must be received on or before September 23, 1996. With respect to the HACCP final regulations, FSIS requests comments by November 22, 1996.

ADDRESSES: Submit one original and two copies of written comments to: FSIS Docket Clerk, DOCKET #93–016F, U.S. Department of Agriculture, Food Safety and Inspection Service, Room 4352, 1400 Independence Avenue, S.W., Washington, DC 20250–3700. All comments submitted on this rule will be available for public inspection in the Docket Clerk's Office between 8:30 a.m. and 1:00 p.m., and 2:00 p.m. and 4:30 p.m., Monday through Friday. The references and baseline surveys cited in this document are available for inspection in the FSIS Docket Room.

FOR FURTHER INFORMATION CONTACT: (1) GENERAL: Dr. Judith A. Segal, Director, Policy, Evaluation, and Planning Staff, (202) 720–7773; (2) MICROBIAL TESTING: Patricia F. Stolfa, Acting Deputy Administrator, Science and Technology, (202) 205–0699.

SUPPLEMENTARY INFORMATION:

Obtaining Copies of This Document:

An electronic version of this document is available on the Internet from the Federal Register at www.access.gpo.gov/su__docs/aces/aces140.html. Paper or diskette copies of this document may be ordered from the National Technical Information Service (NTIS), U.S. Department of Commerce, 5285 Port Royal Road, Springfield, VA 22161. For a complete copy of this document orders must reference NTIS accession number PB96–177613 (paper copy) and PB96–502166 (disk copy). For a copy of the preamble and rule, the individual appendices, and the impact assessment reference the following NTIS accession numbers: PB96–177621 (preamble and rule only), PB96–177639 (Appendix A), PB96–177647 (Appendix B), PB96–177654 (Appendix C), PB96–177662 (Appendix D), PB96–177670 (Appendix E), PB96–177688 (Appendix F), PB96–177696 (Appendix G), and PB96–177704 (impact assessment). For telephone orders or more information on placing an order, call NTIS at (703) 487–4650 for regular service or (800) 553–NTIS for rush service. Dial (703) 321–8020 with a modem or Telnet fedworld.gov to access this document electronically for ordering and downloading via FedWorld. For technical assistance to access FedWorld, call (703) 487–4608.

Table of Contents

I. Background
- Overview of FSIS Food Safety Goal and Strategy
- FSIS Regulatory Proposals
- FSIS Regulatory and Inspection Reform Plans
- Change Within FSIS
- The FSIS Pathogen Reduction/HACCP Rulemaking Process
- Seven Information Briefings
- Three Scientific and Technical Conferences
- Public Hearing
- Federal-State Relations Conference
- Scoping Session and Six Issue-Focused Meetings
- Food Safety Forum
- Farm-to-Table Strategy
- General Overview of the Comments and the Final Rule
- HACCP and Performance Standards
- Sanitation SOP's, Antimicrobial Treatments, and Cooling Requirements for Raw Meat and Poultry Products
- Timetable for Implementation
- Federally Inspected Establishments
- State-inspected Establishments
- Foreign-inspected Establishments
- Implementation Conferences
- Request for Comments

II. Hazard Analysis and Critical Control Point Systems
- Overview of Final Rule
- History and Background of HACCP
- The Seven HACCP Principles
- HACCP and the FSIS Food Safety Strategy
- Preparing for HACCP Implementation
- Inspection under HACCP
- Implementation Schedule
- Small Business Issues
- Training Considerations
- Mandatory versus Voluntary HACCP
- HACCP from Farm-to-Table
- Total Quality Control (TQC) Establishments and HACCP
- Freedom of Information Act Concerns
- FSIS Enforcement Authority and Whistleblower Protection
- Enforcement and Due Process
- The Final Rule
- Reorganization of HACCP Regulatory Text
- HACCP Systems as a Condition of Receiving Inspection
- Definitions
- Hazard Analysis and HACCP Plan
- Corrective Actions
- Validation, Verification, and Reassessment
- Reassessment
- FSIS Verification
- Records

Training
Adequacy of HACCP Plans
III. Sanitation Standard Operating Procedures
The Proposed Rule
The Final Rule
Comments and Responses
General
Development of Sanitation SOP's
Maintaining Sanitation SOP's
Recordkeeping
''Layering''
Role of Inspectors
Relation to HACCP
Training
Pre-operation Sanitation Inspection
Implementation Date
IV. Microbiological Performance Criteria and Standards
Summary of Proposal
Role of Microbiological Performance Criteria and Standards in FSIS Food Safety Strategy
Overview of Final Rule
Process Control Verification Performance Criteria
Pathogen Reduction Performance Standards
Process Control Verification: *E. coli* Performance Criteria and Testing
Rationale for Using *E. coli* Tests to Verify Process Control
Use of Baseline Values to Establish *E. coli* Performance Criteria
Establishment of *E. coli* Performance Criteria to Verify Process Control
Sampling Frequency for *E. coli* Testing
Sampling and Analytical Methodology
Recordkeeping
Use of *E. coli* Test Results by Establishments
Use of *E. coli* Test Results by FSIS
Implementation Timetable
Request for Comments
Pathogen Reduction Performance Standards
Rationale for Selecting *Salmonella*
Basis for Performance Standards and Plans for Future Adjustments
Determining Compliance with the Standard
FSIS Testing Strategy
FSIS Testing Methods
FSIS Enforcement Strategy
Implementation Timetable for Pathogen Reduction Performance Standards
Response to Comments
The Indicator Organism
Frequency and Cost of Testing
Legal Authority for Testing Requirement
Performance Standards for Process Control
Basis for Target Levels
Methodology for Meeting Targets
Sample Size
Testing Methodology
Role of Inspectors
Laboratories
Alternative Sampling under HACCP
Relationship to HACCP
V. Other Issues and Initiatives
Antimicrobial Treatments
Cooling and Chilling Requirements for Raw Meat and Poultry
International Trade
Recordkeeping and Record Retention
Finished Product Standards for Poultry Carcasses
VI. Economic Impact Analysis and Executive Orders
Executive Order 12866
HACCP-based Regulatory Program Produces Net Benefit to Society
Market Failure Justifies Regulation of Pathogens
Regulatory Alternatives
Unfunded Mandates Reform Act
Regulatory Flexibility Act
Executive Order 12778
Paperwork Requirements
Sanitation Standard Operating Procedures (Sanitation SOP's)
Time and Temperature
Microbiological Testing
HACCP
VII. Final Rules
VIII. Appendix A—Guidelines for Developing a Standard Operating Procedure for Sanitation (Sanitation SOP's) in Federally Inspected Meat and Poultry Establishments
IX. Appendix B—Model of a Standard Operating Procedure for Sanitation
X. Appendix C—Guidebook for the Preparation of HACCP Plans
XI. Appendix D—Hazards and Preventive Measures Guide
XII. Appendix E—FSIS Sample Collection Guidelines and Procedure for Isolation and Identification of *Salmonella* from Raw Meat and Poultry Products
XIII. Appendix F—Guidelines for *Escherichia coli* Testing for Process Control Verification in Cattle and Swine Slaughter Establishments
XIV. Appendix G—Guidelines for *Escherichia coli* Testing for Process Control Verification in Poultry Slaughter Establishments
XV. Supplement—Final Regulatory Impact Assessment

I. Background

Overview of FSIS Food Safety Goal and Strategy

The mission of the FSIS is to ensure that meat, poultry, and egg products are safe, wholesome, and properly marked, labeled, and packaged. Regarding meat and poultry, FSIS currently carries out its food safety responsibility primarily by managing an inspection program within meat and poultry slaughter and processing establishments. This program relies heavily on FSIS inspectors to detect and correct establishment sanitation and food safety problems.

Recent outbreaks of foodborne illness and studies conducted over the past decade by the National Academy of Sciences (NAS), the U.S. General Accounting Office (GAO), and FSIS itself have established the need for fundamental change in the FSIS meat and poultry inspection program to improve food safety, reduce the risk of foodborne illness in the United States, and make better use of the Agency's resources.

FSIS has embarked on a broad effort to bring about the necessary changes in its program. In the preamble to the ''Pathogen Reduction; Hazard Analysis Critical Control Point (HACCP) Systems'' proposed rule, published in the Federal Register of February 3, 1995 (Docket #93–016P, 60 FR 6774; hereafter ''Pathogen Reduction/HACCP proposal''), FSIS traced the origins of its current program, described today's food safety challenges, and outlined a new food safety strategy for meat and poultry products. In that document, FSIS proposed new regulations to mandate adoption within meat and poultry establishments of HACCP, a science-based process control system for food safety.

The HACCP requirement and other food safety measures proposed by FSIS in the Pathogen Reduction/HACCP proposal were motivated by the critical need to fill a gap in the current regulation and inspection system and the lack of adequate measures to address the problem of pathogenic microorganisms on raw meat and poultry products.

Such bacteria, including *Salmonella, E. coli* O157:H7, *Campylobacter* and *Listeria monocytogenes,* are significant food safety hazards associated with meat and poultry products. FSIS estimates that the contamination of meat and poultry products with these bacteria results annually in as many as 4,000 deaths and 5,000,000 illnesses.

FSIS stated the goal of its food safety strategy and proposed Pathogen Reduction/HACCP regulations as follows: FSIS believes its food safety goal should be to reduce the risk of foodborne illness associated with the consumption of meat and poultry products to the maximum extent possible by ensuring that appropriate and feasible measures are taken at each step in the food production process where hazards can enter and where procedures and technologies exist or can be developed to prevent the hazard or reduce the likelihood it will occur (60 FR 6785).

In establishing this goal, FSIS recognized that no single technological or procedural solution exists for the problem of foodborne illness and that the Agency's food safety goal would be achieved only through continuous efforts to improve hazard identification and prevention.

The food safety strategy FSIS outlined in the Pathogen Reduction/HACCP proposal included the following major elements: (1) provisions for systematic prevention of biological, chemical, and physical hazards through adoption by meat and poultry establishments of science-based process control systems;

(2) targeted efforts to control and reduce harmful bacteria on raw meat and poultry products; (3) adoption of food safety performance standards that provide incentives for innovation to improve food safety and to provide a measure of accountability for achieving acceptable food safety results; (4) removal of unnecessary regulatory obstacles to innovation; and (5) efforts to address hazards that arise throughout the food safety continuum from farm to table.

FSIS also stressed, as a central theme of its strategy, a need to clarify and strengthen the responsibilities of establishments for maintaining effective sanitation, following sound food safety procedures, and achieving acceptable food safety results.

FSIS Regulatory Proposals

FSIS proposed HACCP as the organizing structure for its food safety program because HACCP is the optimal framework for building science-based process control to prevent food safety hazards into food production systems. HACCP also focuses FSIS inspection on the most significant hazards and controls.

To complement HACCP, FSIS proposed to establish, for the first time, food safety performance standards for pathogenic microorganisms on raw meat and poultry products, initially as ''interim'' targets for the reduction of *Salmonella* contamination of raw carcasses and raw ground meat and poultry products. These performance standards would measure whether HACCP systems are working effectively to address food safety hazards. FSIS proposed to require that establishments conduct daily microbial testing for *Salmonella* to verify achievement of the ''targets.''

FSIS also proposed three near-term measures to speed progress on controlling and reducing pathogenic microorganisms on raw products during the proposed three year phase-in of HACCP. These proposed measures were: (1) a requirement that all establishments adopt and implement sanitation standard operating procedures (Sanitation SOP's); (2) a requirement that all slaughter establishments use at least one effective antimicrobial treatment to reduce harmful bacteria; and, (3) standards for cooling red meat carcasses to prevent the growth of harmful bacteria.

FSIS Regulatory and Inspection Reform Plans

In the Pathogen Reduction/HACCP proposal, FSIS acknowledged that it must do more than mandate HACCP and other new regulatory requirements in order to achieve its food safety goals. FSIS must also reform its existing regulations, policies, and directives to be consistent with HACCP principles and with the Agency's intention to rely more heavily on performance standards. Current FSIS regulatory requirements and procedures are generally highly detailed and prescriptive. They specify, for example, precise cooking time-and-temperature combinations for many products. Current regulations often assign to FSIS responsibility for the means used by establishments to produce safe food in a sanitary environment (e.g., FSIS requires that facility blueprints and equipment receive Agency approval before use).

As part of its regulatory reform initiative, FSIS has undertaken the conversion of current command-and-control regulations to performance standards. Command-and-control regulations, and the Inspection System Guide that FSIS inspectors use to enforce those regulations, resulted from the perceived need to achieve uniformity among federally inspected meat and poultry establishments. Technological advances introduce a new imperative, however. If establishments are to innovate, using new technologies to improve food safety, they cannot be impeded by a one-size-fits-all regulatory system. Under contemporary conditions, affording establishments the flexibility to make establishment-specific decisions outweighs the advantages of uniformly applicable rules. Recognizing this, FSIS is changing inspection to meet the needs of the new regulatory system.

Under the command-and-control-based system, the inspector assumed responsibility for ''approving'' production-associated decisions. Under the new system, industry assumes full responsibility for production decisions and execution. FSIS, having set food safety standards, monitors establishments' compliance with those standards and related requirements and under HACCP, verifies process control and pathogen reduction and control. The number of inspection tasks will be reduced, so that inspectors can focus more attention on areas of greatest risk in the meat or poultry production system within each establishment.

With the shift to HACCP and greater reliance on performance standards, establishments will be afforded greater autonomy in decision-making affecting their own operations and, in return, be expected to take responsibility for setting up site- and product appropriate process control measures to achieve FSIS-established performance standards. This approach, which is intended to increase both the incentives and the flexibility establishments need to innovate and improve food safety, requires a complete review and overhaul of the ''command-and-control'' requirements and procedures in current FSIS regulations, policies, and directives.

HACCP-based food safety strategies and performance standards also require important changes in FSIS's approach to inspection. FSIS intends to clarify the respective responsibilities of FSIS inspectors and establishment management.

In the Federal Register of December 29, 1995 (60 FR 67469), FSIS published an advance notice of proposed rulemaking (ANPR) and additional rulemaking proposals describing the Agency's strategy for the regulatory and inspectional reform required to achieve the changes required for consistency with HACCP. These changes will be accomplished before establishments are required to implement HACCP.

Change Within FSIS

Finally, achieving the Agency's food safety goals will require substantial change within FSIS itself, as the roles of establishments and Federal inspectors are realigned to accord with the HACCP philosophy. The scope of FSIS's food safety activities will also extend beyond slaughter and processing establishments to include new preventive approaches to hazards that occur during transportation, distribution, and retail, restaurant or food service sale of meat and poultry products.

This expansion of the Agency's roles will require substantial training and redeployment of employees, and will place an enormous strain on agency resources. To meet these challenges, FSIS has conducted a top-to-bottom review of its regulatory roles, resource allocation and organizational structure. Reports prepared by FSIS employees containing analysis and recommendations on these topics were described and made available for public comment in the Federal Register of September 12, 1995 (60 FR 47346). FSIS will be making the fundamental internal changes required to successfully carry out its HACCP-based farm-to-table food safety strategy. These changes within FSIS, which include a major reorganization of the Agency, will ensure that FSIS is using its resources to improve food safety consistent with its new regulatory framework.

The FSIS Pathogen Reduction/HACCP Rulemaking Process

Recognizing that HACCP and other regulatory requirements contained in the Pathogen Reduction/HACCP proposal are part of a broad overhaul of the FSIS regulatory program, and involve important changes in the responsibilities of meat and poultry establishments, FSIS has conducted a thorough and interactive rulemaking process. The Agency's goal has been to provide many opportunities for submission by the public of both written and oral comments and for interchange between FSIS and interested parties on the many major policy and technical issues involved in the reform of meat and poultry inspection.

The initial comment period was 120 days, which FSIS subsequently extended for an additional 30 days and later reopened for another 95 days. During this period, FSIS held seven informational briefings, three scientific and technical conferences, a two-day public hearing, a scoping session and six issue-focused public meetings, a Federal-State conference, and a Food Safety Forum. Extensive oral comments were transcribed and included with written comments in the record of this rulemaking. A brief summary of the various public meetings follows.

Seven Information Briefings

Initially, FSIS held informational briefings in seven cities across the country to explain the Pathogen Reduction/HACCP proposal to the public and to answer questions. A panel of FSIS officials and scientists provided information on the proposed regulations and answered questions. These briefings were not intended to solicit comments, but to help interested parties prepare themselves to comment on the Pathogen Reduction/HACCP proposal. These briefings were held:

March 7, 1995; Oakland, California
March 14, 1995; Dallas, Texas
March 16, 1995; Chicago, Illinois
March 21, 1995; Atlanta, Georgia
March 23, 1995; New York, New York
March 30, 1995; Washington, D.C.
May 22, 1995; Kansas City, Kansas

The Kansas City session included an informational briefing and public meeting for owners and representatives of small meat and poultry establishments and other affected small businesses to discuss the Pathogen Reduction/HACCP proposal. At the meeting, many small business owners said that the Pathogen Reduction/HACCP proposal might eventually inhibit small businesses from competing with larger entities because the resulting additional costs could be borne more easily by larger companies. Three Directors of State Meat and Poultry Inspection Programs stated their views that the Pathogen Reduction/HACCP proposal might have a negative impact upon the small businesses for which they provide inspection. Consumers requested that FSIS base its decisions on the Pathogen Reduction/HACCP proposal not on industry impacts, but on what will best protect the public.

Three Scientific and Technical Conferences

FSIS held three scientific and technical conferences to foster the development of beneficial new food safety technologies, to fill gaps in scientific knowledge, and to ensure that the Agency had the best scientific information available for the rulemaking. Concerned that the typical rulemaking process would not elicit this information, the Agency invited experts on relevant subjects to the meetings, which were open to all interested parties.

The first conference, titled ''New Technology to Improve Food Safety,'' was held April 12–13, 1995, in Chicago, Illinois. This conference explored the available technology that might be introduced into the production and manufacturing of meat and poultry products to control *E. coli* O157:H7 and other harmful pathogens in the food supply. Participants included members of industry, academia, research organizations, and consumers. Additionally, Government representatives from non-food Federal regulatory agencies discussed technology development and transfer in other industries. FSIS discussed how it emphasized and encourages the approval and introduction of new technologies.

The second conference, titled ''The Role of Microbiological Testing in Verifying Food Safety,'' was held May 1–2, 1995, in Philadelphia, Pennsylvania. This meeting explored scientific issues related to the use of microbiological testing for verifying meat and poultry safety. Six persons were invited to present discussions relating to the use and limitations of microbiological testing in ensuring food safety. Twelve representatives from academia, consumer groups, industry, and exporting countries also presented talks on the concepts and methods for microbiological testing that appeared in the proposed regulation. During the comment period following the presentations, 15 people commented on the subjects covered at the meeting and in the proposed regulation.

The third conference, titled ''An Evaluation of the Role of Microbiological Criteria in Establishing Food Safety Performance Standards in Meat and Poultry Products,'' was held May 18–19, 1995, in Washington, D.C. It explored the use of microbiological criteria to establish food safety performance standards for meat and poultry products. Participants generally agreed that HACCP is an effective approach to controlling microbiological hazards in foods, and that government and industry must work together to establish microbiological criteria, sampling plans and training for food safety performance standards. Most commenters agreed that the use of an indicator organism is effective to facilitate and monitor the reduction of microbiological contamination in meat and poultry products. Diverse opinions were expressed on which indicator organisms should be chosen for each type of product.

Public Hearing

On May 30 and 31, 1995, FSIS held a public hearing in Washington, D.C., on the proposed rule.

Thirty-seven persons presented comments at the 2-day hearing. Issues and viewpoints varied greatly. For instance, requests were made to keep carcass-by-carcass inspection, but it was suggested that organoleptic inspection is outdated. While there was support for a HACCP system, many suggestions were made for changes in specific parts of the proposal, particularly microbial testing and antimicrobial treatments. Several commenters described their personal experiences with foodborne illness. Small business owners and their representatives commented on the potential financial burdens that might result from the Pathogen Reduction/HACCP proposal.

Federal-State Relations Conference

As part of the annual meeting of Directors of State Meat and Poultry Inspection Programs, FSIS held a ''Federal-State Relations Conference,'' August 21–23, 1995, in Washington, D.C. This meeting, in which the National Association of State Departments of Agriculture participated, provided an opportunity for representatives from State government to engage in an open exchange with senior USDA officials on the Pathogen Reduction/HACCP proposal. In addition to State Directors, the meeting included representatives from State Departments of Agriculture, State Health Departments and local food safety enforcement agencies; additionally, the Food and Drug Administration (FDA)

and the Association of Food and Drug Officials were participants. These parties recognized a need to better protect the public by optimizing the use of available resources. State agency representatives discussed the need for better coordination within their own States and with the Federal Government to prevent foodborne illness outbreaks. Improved food handling education for industry and consumers was seen as one of the primary ways to improve farm-to-table food safety.

Scoping Session and Six Issue-Focused Meetings

By late August, FSIS had received more than 6,800 comments on the Federal Register notice, in addition to the input obtained at the meetings and the hearing. All this information raised new issues and modified Agency thinking in some areas. In order to share new information and current thinking with its constituencies, FSIS held six issue-focused public meetings on the proposed rule and accepted written comments from those unable to attend. The meetings were announced in the Federal Register (60 FR 45380; Thursday, August 31, 1995) and held at USDA, Washington, D.C., on September 13, 14, 15, 27, 28, and 29, 1995.

FSIS framed an agenda for the meetings and provided issue papers describing current Agency thinking on the proposed rule. Before the issue-focused public meetings, FSIS held a public scoping session on August 23, 1995, to ensure that all parties had an opportunity to suggest issues for the agenda.

The issue papers provided at the six issue-focused public meetings were published in the Federal Register (60 FR 54450; Tuesday, October 24, 1995).

Food Safety Forum

A Food Safety Forum chaired by Secretary Glickman was held on November 8, 1995 to discuss food safety reform issues beyond the specific issues raised by the proposed Pathogen Reduction/HACCP proposal. The forum agenda included topics such as: (1) whether legislative changes to the Federal Meat Inspection Act (FMIA) and the Poultry Products Inspection Act (PPIA) were needed; (2) how FSIS could improve food safety by organizational change, regulatory reform, reliance on user fees, effective resource allocation and other means; (3) cooperation between USDA and State inspection programs; and (4) government and private sector roles in consumer education regarding safe food handling practices. A transcript of the forum has been included in the record for this rulemaking.

Farm-to-Table Strategy

In the preamble to its Pathogen Reduction/HACCP proposal, FSIS presented a strategy for the control of food safety hazards throughout the continuum of animal production and slaughter, and the processing, distribution, and sale of meat and poultry products. FSIS has historically focused on the manufacturing of meat and poultry products through its inspection program, but the Agency's public health mandate requires that the Agency also consider pre- and post-processing hazards as part of a comprehensive strategy to prevent foodborne illness.

This farm-to-table food safety strategy is founded on three principles:

- Hazards that could result in foodborne illness arise at each stage in the farm-to-table continuum: animal production and slaughter, and the processing, transportation, storage and retail, restaurant or food service sale of meat and poultry products. Each stage presents hazards of pathogen and other contamination and each provides opportunities for minimizing the effect of those hazards.
- Those in control of each segment of the farm-to-table continuum bear responsibility for identifying and preventing or reducing food safety hazards that are under their operational control.
- The Agency's public health mandate requires that it address foodborne illness hazards within each segment of the food production chain and implement or encourage preventative strategies that improve the whole system.

FSIS remains committed to a farm-to-table food safety strategy based on these principles. To address hazards arising within slaughter and processing establishments, FSIS proposed and is adopting in this rule significant new regulatory measures. Improving food safety before the animals reach slaughter establishments will require a different approach. The preamble to the Pathogen Reduction/HACCP proposal stated that FSIS will be cooperating with animal producers, scientists in academia, the Animal and Plant Health Inspection Service and other government agencies to develop and foster food safety measures that can be taken on the farm and through marketing channels to decrease public health hazards in animals presented for slaughter. Within this context, the voluntary application of food safety assurance programs based on HACCP principles can be useful in establishing risk reduction practices on the farm and through intermediate marketing stages to control and reduce pathogen hazards at slaughter.

FSIS expects, within the limits of available resources, to serve as a facilitator and coordinator of research and other activities designed to encourage development and implementation of animal production technologies and practices that can improve food safety. FSIS also intends to offer its expertise to assist State health and agricultural officials, when requested, during outbreak investigations of foodborne illnesses to learn more about potential risk factors. FSIS does not intend nor is FSIS authorized, to mandate production practices on the farm, but does expect that continued public concern about foodborne pathogens and adoption of HACCP and food safety performance standards within slaughter and processing establishments will increase incentives for improving food safety practices at the animal production level.

The post-processing transportation, storage, and retail, restaurant or food service sectors are also important links in the chain of responsibility for food safety. In these areas, FDA and State and local governments share authority and responsibility for oversight of meat and poultry products outside of official establishments. FSIS and FDA are collaborating in the development of standards governing the safety of potentially hazardous foods, including meat and poultry, eggs, and seafood, during transportation and storage, with particular emphasis on proper cooling to minimize the growth of pathogenic microorganisms, and on disclosure of prior cargoes in transport vehicles. This effort will be discussed in a forthcoming advance notice of proposed rulemaking.

In the retail, restaurant and food service areas, FSIS and FDA are working in concert with State and local food regulatory officials to foster adoption of updated, uniform, science-based standards, including mandates for HACCP process controls for high-risk processing and packaging operations. State and local authorities have assumed primary responsibility for food safety oversight of retail, restaurant and food service operations, but FSIS and FDA, working through the Conference on Food Protection and other collaborative mechanisms, provide expertise and leadership to support local authorities and foster development of sound food safety standards and practices nationwide. FSIS is cooperating with FDA to update the Food Code, a set of model ordinances recommended for adoption by the

States, to ensure meat and poultry safety is adequately addressed in retail, restaurant and food service settings.

Even as progress is made in reducing contamination of food by harmful bacteria and other safety hazards at the production, processing and subsequent commercial stages of the farm-to-table continuum, it will remain critically important that individual consumers follow safe food handling practices. Proper storage, preparation, and cooking of meat and poultry products are essential to achieving the goal of reducing the risk of foodborne illness to the maximum extent possible. FSIS intends to augment its food handler and consumer education efforts by expanding its collaboration with the meat and poultry industry, other government agencies, consumer and public interest groups, educators, and the media to effectively develop and deliver food safety education and information to the public.

The HACCP requirements and other regulations FSIS is adopting in this final rule will ensure that inspected establishments are taking appropriate measures to reduce hazards at critical stages where the risk of initial contamination is greatest. The public health benefits of these measures, however, are only a part of a comprehensive food safety strategy that seeks to minimize hazards throughout the farm-to-table continuum.

General Overview of the Comments and the Final Rule

HACCP and Performance Standards

The FSIS proposal to require adoption of HACCP in meat and poultry establishments was widely endorsed by comments from large and small businesses, the scientific and public health communities, consumers, and public interest organizations. Commenters strongly supported the concept that meat and poultry establishments should systematically build science-based food safety measures into their production processes following the seven HACCP principles developed by the National Advisory Committee on Microbiological Criteria for Food (NACMCF). Although many commenters requested clarification of how FSIS intends to implement HACCP and conduct inspection under HACCP, the principal critical comments concerned costs and the practicality of using HACCP in very small establishments. FSIS is adopting the HACCP requirements, based on the NACMCF principles, essentially as proposed.

From a food safety standpoint, the most important objective of this rulemaking is to build into food production processes, and into the system of FSIS regulation and oversight, effective measures to reduce and control harmful bacteria on raw meat and poultry products. This will not by itself solve the problem of foodborne illness associated with meat and poultry products. Effective measures are needed throughout the farm-to-table continuum, but this rulemaking will fill the most critical gap in the current system of meat and poultry inspection. While products sold in cooked or otherwise ready-to-eat forms are currently subject to controls and regulatory standards designed to eliminate harmful bacteria, products sold raw are not currently subject, as a general matter, to any such controls or standards.

FSIS has concluded that HACCP-based process control, combined with appropriate food safety performance standards, is the most effective means available for controlling and reducing harmful bacteria on raw meat and poultry products. HACCP provides the framework for industry to set up science-based process controls that establishments can validate as effective for controlling and reducing harmful bacteria. Performance standards tell establishments what degree of effectiveness their HACCP plans will be expected to achieve and provide a necessary tool of accountability for achieving acceptable food safety performance. Science-based process control, as embodied in HACCP, and appropriate performance standards are inextricably intertwined in the Agency's regulatory strategy for improving food safety. Neither is sufficient by itself, but, when combined, they are the basis upon which FSIS expects significant reductions in the incidence and levels of harmful bacteria on raw meat and poultry products and, in turn, significant reductions in foodborne illness.

The proposed interim targets for pathogen reduction based on *Salmonella* generated widely diverse comments. Commenters supported the goal of pathogen reduction, and many recognized some role for microbial testing and the need for a microbial reduction target or performance standard. Some commenters argued that the proposed testing regimen (a single sample per species per day) was inadequate for its purpose in large establishments, while others argued it was too burdensome in small establishments. Some commenters specifically supported the proposed *Salmonella* reduction targets and the daily testing requirements. Many, however, criticized the proposed testing requirements and considered *Salmonella* testing less useful than generic *E. coli* testing as an indicator of whether process controls in slaughter establishments are effectively preventing fecal contamination, the primary pathway for pathogen contamination. At the scientific conference on the role of microbial testing held in Philadelphia, broad support also was expressed for using generic *E. coli* rather than *Salmonella* as a process control indicator.

Based on public comments, FSIS has modified its approach to establishing microbial performance standards. FSIS believes that testing for generic *E. coli* is the appropriate and necessary means by which meat and poultry slaughter establishments must verify their process controls. FSIS reviewed written comments received on the original proposal and comments made at the scientific conferences and public meetings, as well as available scientific data, and has decided to require slaughter establishments to conduct testing for generic *E. coli* to verify process controls. Establishments will be required to test for *E. coli* at a frequency that takes into account their volume of production. FSIS is seeking additional scientific and economic data that may help to further improve the *E. coli* testing protocols.

FSIS is also establishing performance criteria based on national microbiological baseline surveys. The criteria are not regulatory standards but rather provide a benchmark for use by slaughter establishments in evaluating *E. coli* test results. Test results that do not meet the performance criteria will be an indication that the slaughter establishment may not be maintaining adequate process control for fecal contamination and associated bacteria. Such results will be used in conjunction with other information to evaluate and make appropriate adjustments to ensure adequate process control for fecal contamination and associated bacteria.

FSIS is also establishing pathogen reduction performance standards for *Salmonella* that will require all slaughter establishments to reduce the incidence of *Salmonella* contamination of finished meat and poultry carcasses below the national baseline prevalence as established by the most recent FSIS national microbiological baseline data for each major species. FSIS will conduct *Salmonella* testing in slaughter establishments to detect whether they are meeting the pathogen reduction performance standards, and will require corrective action or take regulatory

action, as appropriate, to ensure establishments are meeting the pathogen reduction standards.

Pathogen-specific performance standards for raw products are an essential component of the FSIS food safety strategy because they provide a direct measure of progress in controlling and reducing the most significant hazards associated with raw meat and poultry products. The *Salmonella* standards being established in this final rule, which are based on the current national baseline prevalence of *Salmonella* (expressed as a percentage of contaminated carcasses), are a first step in what FSIS expects to be a broader reliance in the future on pathogen-specific performance standards. FSIS plans to repeat its baseline surveys and collect substantial additional data through other means and, on that basis, adjust the *Salmonella* performance standards and possibly set standards for additional pathogens, as appropriate. Also, FSIS will continue to explore establishing pathogen-specific performance standards based on the levels of contamination (i.e., the number of organisms) on a carcass. Future FSIS efforts on such performance standards will reflect the fact that achieving the food safety goal of reducing foodborne illness to the maximum extent possible will require continuous efforts and improvement over a substantial period.

Sanitation SOP's, Antimicrobial Treatments, and Cooling Requirements for Raw Meat and Poultry Products

Comments generally supported the objectives of the three near-term measures for raw meat and poultry products proposed by FSIS, Sanitation SOP's, antimicrobial treatments, and carcass cooling standards, and most commenters agreed that Sanitation SOP's should be a required element of any meat and poultry establishment's food safety program. Many commenters objected, however, to FSIS mandated antimicrobial treatments in slaughter establishments and carcass cooling standards for red meat prior to the implementation of HACCP. Although most comments generally agreed that antimicrobial treatments would play an important role in many slaughter establishments' HACCP plans, and that proper carcass cooling would be an essential part of any HACCP plan for raw meat and poultry products, these commenters argued that mandating a particular approach to antimicrobial treatments or carcass cooling would be inconsistent with the HACCP concept that establishment management is responsible for designing a system of controls appropriate for each establishment. They also argued that mandating antimicrobial treatments was unnecessary if establishments were required to meet pathogen reduction performance standards. Similarly, with respect to the proposed requirement that establishments cool red meat carcasses following specific cooling rate standards prescribed by FSIS, commenters argued that HACCP, reinforced by performance standards, would ensure proper carcass cooling. Many commenters said that the specific time-and-temperature requirements proposed by FSIS were often not feasible, posed worker safety concerns, and would divert effort and resources that could be used more productively in preparing for implementation of HACCP.

Based on the comments, FSIS has reconsidered its approach to the proposed near-term measures. FSIS believes that its regulatory program and the food safety efforts of the meat and poultry industry should be focused on making a transition to HACCP as rapidly and effectively as possible and that FSIS should not mandate any near-term measures that would not be expected to continue as mandatory elements of a HACCP-based system.

FSIS has decided to adopt final rules that mandate Sanitation SOP's. Good sanitation is a critical foundation for HACCP, and Sanitation SOP's are an essential element of the FSIS effort to more clearly define establishment and inspector responsibilities, and better focus both the establishment management and FSIS on those elements of daily sanitation that relate most directly to the risk of product contamination. Near-term implementation of Sanitation SOP's will facilitate the transition to HACCP.

FSIS has decided not to mandate antimicrobial treatments in slaughter establishments. The Agency expects that antimicrobial treatments will play an important role in the design of slaughter HACCP plans as establishments institute controls that are effective in reducing pathogens and meeting FSIS performance standards. As a general matter, however, FSIS does not intend to mandate the specific controls that establishments must adopt in their HACCP plans. In the case of antimicrobial treatments, FSIS believes that improvement in food safety would be better served by providing establishments the incentive and flexibility to incorporate antimicrobial treatments in any manner they judge most effective for their operations to meet FSIS-established performance standards for reducing bacterial contamination.

With respect to carcass cooling, FSIS continues to believe that, in a HACCP environment, appropriate performance standards are needed for the cooling of carcasses and raw meat and poultry products to prevent the growth of harmful bacteria. After consideration of the comments, FSIS has concluded, however, that the specific time-and-temperature combinations proposed by FSIS were too restrictive and that a scientifically sound and effective strategy for preventing the growth of pathogens through proper cooling must apply not only within, but also beyond, FSIS-inspected establishments. Thus, instead of including requirements for carcass cooling in this final rule, FSIS intends to extend this rulemaking to consider alternative approaches to performance standards for cooling within establishments. Concurrently, FSIS also intends to develop rulemaking covering the adoption of standards for cooling of raw products during transportation, storage, and retail, restaurant or food service sale. FSIS anticipates adopting performance standards designed to minimize the growth of harmful bacteria on raw products that establishments will be required to meet through their HACCP plans. FSIS will announce in a future issue of the Federal Register a three-day public conference to gather further scientific information and public comment on these subjects.

Timetable for Implementation

Federally Inspected Establishments

FSIS proposed an implementation timetable that would have phased in the near-term measures and HACCP over a period of time beginning 90 days and ending three years after publication of the final rule. Sanitation SOP's and the other near-term measures, as well as the proposed microbial sampling by establishments for *Salmonella*, were to begin 90 days after publication. Slaughter establishments were to be held accountable for meeting the *Salmonella* targets two years after publication.

FSIS proposed to phase in HACCP over a one to three-year period, primarily on a process-by-process basis. For example, raw ground products would be subject to the HACCP requirements one year after publication of the final rule, while all slaughter establishments would be required to start HACCP thirty months (2½ years) after publication of the final rule. However, FSIS proposed that establishments with annual sales of less than $2.5 million be given three years to

comply with the HACCP requirement, regardless of the processes they run.

Some commenters said the proposed implementation timetable was too slow, considering the seriousness of the food safety issues involved and the familiarity with HACCP that already exists among many in the industry. Other commenters pointed out that many larger establishments have already adopted HACCP. Some said the Pathogen Reduction/HACCP proposal placed excessive burdens on smaller establishments, which were said to be less prepared technically and financially to carry out HACCP. Wide support was voiced for implementing HACCP as promptly as practicable, taking into account the diversity of businesses involved and the different levels of readiness for HACCP.

FSIS has considered these comments and has also re-evaluated the proposed timetable for implementation of all requirements discussed above in light of preparations FSIS will itself have to make to implement HACCP, including the training of inspection and other agency employees. FSIS believes it is important to bring the meat and poultry supply under HACCP-based process control and to implement other elements of its food safety strategy as rapidly as possible. It is also important to have a timetable that is realistic for implementing this fundamental transformation in how FSIS regulates meat and poultry establishments. FSIS is modifying the timetable for implementation in a way that achieves both goals.

The Sanitation SOP's requirements will take effect 6 months after publication of these final rules, rather than 90 days as originally proposed.

Establishments slaughtering livestock or poultry will be required to begin process control verification testing for generic *E. coli* 6 months after publication of this final rule.

FSIS will begin holding slaughter establishments and establishments producing raw ground products accountable for achieving *Salmonella* pathogen reduction performance standards at the time they will be required to implement HACCP under the phase-in schedule described below, rather than the single, two-year delayed effective date originally proposed. Beginning approximately three months after publication of this final rule, FSIS will initiate its pre-enforcement *Salmonella* testing program. This establishment-by-establishment *Salmonella* prevalence survey will provide critical data on the performance of establishments; it will inform establishments of their performance, and guide FSIS enforcement testing and compliance strategies after establishments are required to meet the *Salmonella* performance standards.

In response to comments, FSIS is modifying the proposed timetable for implementing HACCP from one based primarily on production process in an establishment to one based on establishment size. Under this approach, the pace at which most of the Nation's meat and poultry supply comes under HACCP-based process control will be accelerated. Most important, slaughter establishments that account for 75% of the annual meat and poultry production in the United States will be required to implement HACCP 18 months after publication of these final rules, rather than 30 months after publication as originally proposed. At the same time, very small establishments (those with fewer than 10 employees *or* with annual sales of less than $2.5 million, together accounting for less than 2% of meat and poultry production) will be provided an additional six months beyond the proposed three years to implement HACCP.

Under this timetable, FSIS gains needed time to develop and sequence inspector training and other preparatory activities. Also, establishments that carry out multiple processes (such as the so-called ''combo'' establishments that both slaughter animals and grind raw products) will be able to implement HACCP on a more coherent establishment-wide basis, rather than on a process-by-process basis. A detailed description of the implementation timetable and its rationale is provided in section II of this preamble.

State-Inspected Establishments

Both the FMIA and PPIA direct Federal cooperation with States in developing and administering intrastate inspection programs that include mandatory antemortem and postmortem inspection, reinspection, and sanitation requirements which are ''at least equal to'' Federal requirements. Consequently, each State receiving matching Federal funds for the administration of its intrastate meat and poultry inspection program must implement Pathogen Reduction/HACCP programs that are at least equal to provisions set forth in this final rule. FSIS will coordinate closely with States that maintain federally supported meat and poultry inspection programs to ensure that Pathogen Reduction/HACCP is implemented in all intrastate establishments.

Foreign-Inspected Establishments

In order to export meat or poultry to the United States, foreign countries must establish a system of inspection that is equivalent to the system in this country. Determinations of equivalency made by U.S. reviewers of foreign meat and poultry inspection systems are currently based upon (1) the presence or lack of specific regulatory requirements and (2) how those requirements are enforced. As Pathogen Reduction/HACCP regulatory provisions are implemented in the U.S. domestic market, foreign countries will concurrently be evaluated to ascertain whether their inspection systems provide equivalent regulatory provisions with adequate levels of enforcement.

Implementation Conferences

FSIS plans to convene a three-day HACCP implementation conference in Washington, DC, about 60 days after publication of this final rule. Similar sessions will follow in various cities around the country.

The purpose of the implementation conferences is to continue, and build upon, the dialogue among interested parties that occurred during the six days of public meetings FSIS conducted in September 1995 on the proposed rule. FSIS anticipates that the following topics will be discussed at the implementation conferences: (1) status of FSIS efforts to develop generic model HACCP plans and conduct small establishment HACCP demonstration projects; (2) the draft guidance materials published as Appendices; (3) the revised HACCP implementation schedule and certain technical aspects of the regulations being promulgated in this final rule; (4) other implementation issues identified by the public; (5) methods to achieve the goal of consistent training for FSIS and industry employees; and (6) due process and enforcement issues.

In addition, FSIS plans to conduct two public conferences on technical issues related to *E. coli* testing. The first conference is planned to be held approximately 45 days into the 60-day comment period following publication of this rule. The public conference will be led by a panel of scientists from FSIS and other government agencies who will listen to testimony and review comments received on these technical issues and share their observations and opinions. FSIS will consider their input as well as all comments received as the basis for any necessary technical amendments which will be completed at least 30 days before the

implementation date. The second conference is tentatively planned for approximately 9 months following publication of this rule. This conference would be an opportunity for the industry and others to discuss with FSIS new information based on about 3 months of testing experience that may bear on these same issues and might allow for further adjustments of protocols before FSIS inspectors are tasked, about three months later, with comparing test results to the national criteria as part of their inspection routine. FSIS will publish further, more detailed notice of these conferences in future issues of the Federal Register.

Request for Comments

These final rules have benefitted from substantial public comment and the dialogue that took place during extensive public meetings with interested groups and individuals. Following the close of the comment period on November 13, 1995, several industry associations requested that these regulations be issued as ''interim'' final rules with a 30-day opportunity for further public comment prior to the rules becoming final. FSIS is denying this request because the HACCP principles and other major elements of these final regulations have already been the subject of unusually extensive public comment and dialogue, and it is important to proceed toward implementation of these new food safety measures as promptly as possible.

FSIS seeks comments, however, on certain technical aspects of these final regulations and on the guidelines (published here as Appendices) that will play a role in implementation of sanitation SOP's, microbial testing, and HACCP. FSIS requests comments no later than September 23, 1996 on (1) technical issues that are associated with *E. coli* testing; (2) the *E. coli* performance criteria, and (3) the Sanitation SOP's Guideline and Model Sanitation SOP's, published at Appendices A and B, respectively.

Based on comments it receives, FSIS will make any necessary revisions in the draft guidelines and technical aspects of the *E. coli* testing regulation prior to the effective date of the affected regulatory requirements.

With respect to the HACCP final regulations, FSIS requests comments by November 22, 1996 on (1) the revised HACCP implementation timetable, including any factual information that commenters believe would justify any adjustments in the announced effective dates; (2) the Hazards and Preventive Measures Guide (published at Appendix D) and (3) the Guidebook for the Preparation of HACCP Plans (published at Appendix C).

II. Hazard Analysis and Critical Control Point Systems

Overview of Final Rule

This final rule requires that federally inspected establishments implement HACCP systems to address hazards that are reasonably likely to occur in their operations. The HACCP systems mandated by this final rule focus on attributes affecting product safety, not those affecting economic adulteration or quality. On the effective dates of this final rule, FSIS will begin verifying HACCP system operations as part of its inspection program. Establishments will be required to maintain a HACCP plan covering every meat or poultry product produced for human food. Processes for which HACCP plans must be developed include slaughter for all species; raw ground meat or poultry products; raw product, not ground (e.g., meat cuts or whole or cut-up birds); shelf-stable nonheat-treated products (e.g., jerky); shelf-stable heat-treated products (e.g., edible fats); thermally processed/commercially sterile products (e.g., canned soup); fully cooked nonshelf-stable products (e.g., canned hams that must be refrigerated); not fully cooked/heat-treated products (e.g., char-marked beef patties); and nonshelf-stable products with secondary inhibitors (e.g., fermented sausage). It should be noted that the category of raw, not ground product can include products with certain additional processing steps beyond carcass dressing, such as cutting up whole carcasses or marinating meat or poultry products.

History and Background of HACCP

HACCP is a conceptually simple system whereby meat and poultry establishments can identify and evaluate the food safety hazards that can affect the safety of their products, institute controls necessary to prevent those hazards from occurring or keeping them within acceptable limits, monitor the performance of controls, and maintain records routinely. HACCP is the best system currently available for maximizing the safety of the nation's food supply.

HACCP systems have been recommended for use in the food industry for more than a quarter century. The HACCP concept has been promoted by government and scientific groups and incorporated for many years in FSIS's and FDA's regulations on canned foods. Committees of the NAS have recommended that government agencies with responsibility for controlling microbiological hazards in foods, including FSIS, promulgate regulations requiring industry to utilize the HACCP system for food protection purposes.

The NACMCF, which was established in accordance with a NAS committee recommendation, endorsed the HACCP system as an effective and rational approach to the assurance of food safety. In its March 20, 1992, publication ''Hazard Analysis and Critical Control Point System,'' NACMCF advocated the standardization of the HACCP principles and their application by industry and regulatory authorities, with each food-producing establishment developing a HACCP system tailored to its individual product, processing, and distribution conditions.

The U.S. General Accounting Office, in a series of reports between 1992 and 1994, endorsed HACCP as an effective, scientific, risk-based system for protecting the public from foodborne illness. On December 18, 1995, the FDA published final rules requiring the adoption of HACCP systems in seafood processing plants (60 FR 65096).

International and foreign government bodies have also advocated the adoption of HACCP systems. The International Commission on Microbiological Specifications for Foods (ICMSF), in its 1988 report, ''HACCP in Microbiological Safety and Quality,'' endorsed the use of HACCP systems in food production, processing, and handling. In 1993, the Food and Agriculture Organization/World Health Organization Codex Alimentarius Commission adopted a HACCP document that now serves as a guide for countries to incorporate HACCP principles into their food industries. The seven HACCP principles adopted by the Codex Alimentarius Commission are identical to those adopted by the NACMCF and on which this final rule is based. HACCP principles have been embodied in recent European Union regulatory directives and in food protection programs conducted by the governments of Canada, New Zealand, and Australia.

The Seven HACCP Principles

The seven HACCP principles recommended by NACMCF in 1992 provide the framework for this final rule. While the seven principles are not explicitly listed as such in the codified regulatory text, they are embodied in the regulatory requirements for a hazard analysis in § 417.2(a); the elements of a HACCP plan in § 417.2 (b) and (c); the corrective action requirements in § 417.3; the validation, verification, and reassessment requirements in § 417.4; and the record review and maintenance

requirements in § 417.5. The seven HACCP principles are discussed below.

Principle No. 1: A hazard analysis of each process must be carried out. The purpose of the analysis is to identify and list the food safety hazards reasonably likely to occur in the production process for a particular product and the preventive measures necessary to control the hazards. A food safety hazard is any biological, chemical, or physical property that may cause a food to be adulterated or otherwise unsafe for human consumption. A listed hazard must be of such a nature that its prevention, elimination, or reduction to acceptable levels is essential to the production of a safe food.

Examples of questions to be considered in a hazard analysis include: (1) What potential hazards may be present in the animals to be slaughtered or the raw materials to be processed? (2) What are the avenues that might lead to contamination of finished product with pathogenic microorganisms, hazardous chemicals, or other potentially hazardous contaminants? (3) What is the likelihood of such contamination and what are the means for preventing it? (4) Does the food contain any ingredient historically associated with a known microbiological hazard? (5) Does the food permit survival or multiplication of pathogens or toxin formation during processing? (6) Does the process include a controllable processing step that destroys pathogens? (7) Is it likely that the food will contain pathogens and are they likely to increase during the times and conditions under which the food is normally stored before being consumed? (8) What product safety devices are used to enhance consumer safety (e.g., metal detectors, filters, thermocouples)? (9) Does the method of packaging affect the multiplication of pathogenic microorganisms and/or the formation of toxins? (10) Is the product epidemiologically linked to a foodborne disease?

Principle No. 2: The critical control points (CCP) of each process must be identified. A CCP is a point, step, or procedure at which control can be applied and a food safety hazard can be prevented, eliminated, or reduced to an acceptable level. All hazards identified during the hazard analysis must be addressed. The information developed during the hazard analysis should enable the establishment to identify which steps in their processes are CCP's.

Identification of CCP's for controlling microbial hazards throughout the production process is particularly important because these hazards are the primary cause of foodborne illness. The establishment may find the CCP decision tree developed by the NACMCF useful in the CCP identification process (see Figure 1). However, the use of this technique in identifying CCP's is not required by this final rule.

Principle No. 3: The critical limits for preventive measures associated with each identified CCP must be established.

BILLING CODE 3410–DM–P

Figure 1. CCP Decision Tree (Apply at each step of process with an identified hazard.)

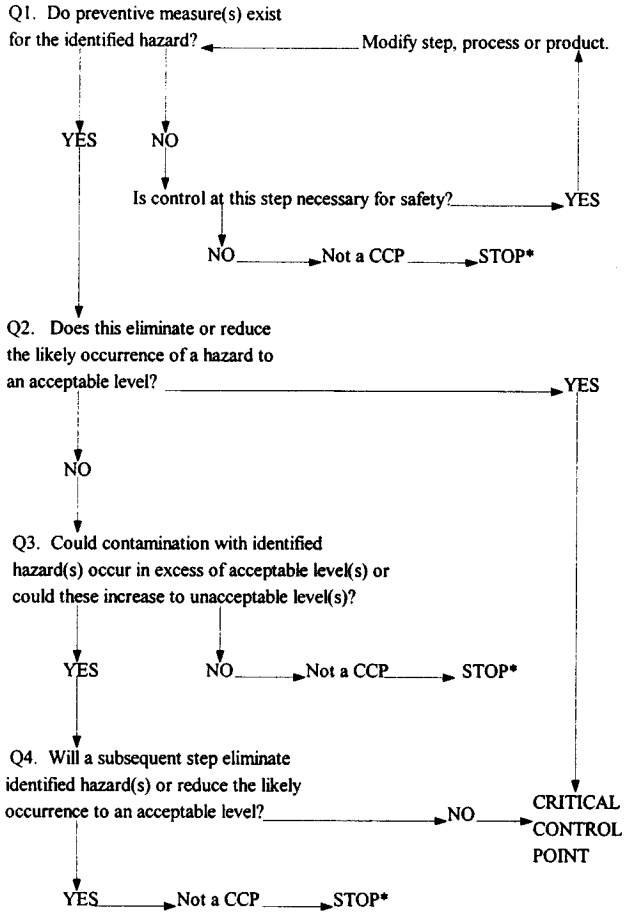

*Proceed to next step in the described process.

BILLING CODE 3410–DM–C

A critical limit is the maximum or minimum value to which a process parameter must be controlled at a CCP to prevent, eliminate, or reduce to an acceptable level the identified physical, biological, or chemical food safety hazard. Critical limits are most often based on process parameters such as temperature, time, physical dimensions, humidity, moisture level, water activity, pH, titratable acidity, salt concentration, available chlorine, viscosity, preservatives, or survival of target pathogens. Critical limits should be based on applicable FSIS regulations or guidelines, FDA tolerances and action levels, scientific and technical literature, surveys, experimental studies, or the recommendations of recognized experts in the industry, academia, or trade associations.

Establishments are encouraged to establish critical limits more stringent than those now required by FSIS regulations or suggested by scientific data to ensure that regulatory requirements are routinely met, even when minor deviations occur.

Principle No. 4: The monitoring requirements for CCP's must be established. Monitoring is an integral part of HACCP and consists of observations or measurements taken to assess whether a CCP is within the established critical limit. Continuous monitoring is preferred, but when it is not feasible, monitoring frequencies must be sufficient to ensure that the CCP is under control.

Assignment of the responsibility for monitoring is an important consideration for each CCP. Personnel assigned the monitoring activities should be properly trained to accurately record all results, including any deviations, so that immediate corrective actions may be taken.

Principle No. 5: The HACCP plan must include corrective action to be taken when monitoring indicates that there is a deviation from a critical limit at a critical control point. Although the process of developing a HACCP plan emphasizes organized and preventive thinking about what is occurring as the meat or poultry product is being manufactured, the existence of a HACCP plan does not guarantee that problems will not arise. For this reason, the identification of a planned set of activities to address deviations is an important part of a HACCP plan. In such instances, corrective action plans must be in place to determine the disposition of the potentially unsafe or noncompliant product and to identify and correct the cause of the deviation. The HACCP plan itself might require modification, perhaps in the form of a new critical limit, or of an additional CCP.

Principle No. 6: Effective recordkeeping procedures that document the entire HACCP system must be developed and maintained. A HACCP system will not work unless consistent, reliable records are generated during the operation of the plan, and those records are maintained and available for review. One of the principal benefits of a HACCP process control system to both industry and regulatory officials is the availability of objective, relevant data.

Principle No. 7: HACCP systems must be systematically verified. After initial validation that the HACCP system can work correctly and effectively with respect to the hazards, the system must be verified periodically. Periodic verification involves the use of methods, procedures, or tests in addition to those used for monitoring, to determine whether the HACCP system is in compliance with the HACCP plan and/or whether the HACCP plan needs modification and revalidation to achieve its food safety objective.

In the NACMCF explanation of the verification principle, which FSIS is following, four processes are involved in the verification of the establishment's HACCP system. The establishment is responsible for the first three; FSIS is responsible for the fourth. The first is the scientific and technical process, known as ''validation,'' for determining that the CCP's and associated critical limits are adequate and sufficient to control likely hazards. The second process is to ensure, initially and on an ongoing basis, that the entire HACCP system functions properly. The third consists of documented, periodic, reassessment of the HACCP plan. The fourth process defines FSIS's responsibility for certain actions (Government verification) to ensure that the establishment's HACCP system is functioning adequately.

HACCP and the FSIS Food Safety Strategy

The food safety goal of FSIS's Pathogen Reduction/HACCP rulemaking proposal is to reduce the risk of foodborne illness from meat and poultry products to the maximum extent possible by ensuring that appropriate and feasible preventive and corrective measures are taken at each stage of the food production process where food safety hazards occur. There is no single technological or regulatory solution to the problem of foodborne illness. Continuous efforts are required by industry and government to improve methods for identifying and preventing hazards and to minimize the risk of illness.

FSIS proposed HACCP as the framework for carrying out its comprehensive strategy to improve food safety. HACCP, combined with the other measures required by this rulemaking, will substantially improve the ability of meat and poultry establishments and FSIS to target and systematically prevent and reduce food safety hazards and, working together, to continuously improve food safety as science and technology improve. These measures fill a critical gap in the current system with respect to the control and reduction of harmful bacteria on raw meat and poultry products and will, over time, significantly reduce the risk of foodborne illness.

FSIS's meat and poultry inspection program currently addresses and will continue to address many matters of importance to the safety and quality of the food supply, including supervision of industry compliance with sanitation standards, exclusion of diseased animals from the food supply, examination of carcasses for other visible defects that can affect safety and quality, and inspecting for economic adulteration. These activities respond to some of the public's most basic expectations regarding the safety and quality of the food supply and reflect the standards and requirements established by Congress in the laws FSIS administers. FSIS is strongly committed to the most effective and efficient implementation of these statutory requirements.

This final rule initiates a fundamental change in the inspection program to better meet FSIS's paramount obligation to protect the public health. Specifically, it addresses in a substantive way the public health problem of foodborne illness associated with the consumption of meat and poultry products. It does so in large part by better delineating and clarifying the respective roles of industry and FSIS to ensure that meat and poultry products are produced in accordance with sanitation and safety standards and are not adulterated or misbranded within the meaning of the FMIA and PPIA. This rule makes clear that the industry is responsible for producing and marketing products that are safe, unadulterated, and properly labeled and packaged. FSIS is responsible for inspecting products and facilities to verify that the statutory requirements are being met and for taking appropriate compliance and enforcement actions when the requirements are not being met.

The line between the responsibilities of FSIS and those of the industry has often been blurred. This is because of the prescriptive nature of the current FSIS inspection program and the tendency for some establishments to rely on FSIS inspectors to do what is necessary to direct the correction of deficiencies and to ensure that outgoing products are safe, and not adulterated or misbranded. Some establishments operate on the assumption that if the inspector identifies no problem, their meat or poultry products may be entered into commerce. This is even more problematic because the current inspection system is based primarily on organoleptic methods that cannot detect the hazards of pathogenic microorganisms. The line has also been blurred because of the excessive reliance of the FSIS inspection program on the detection and correction of problems after the fact, rather than assurance that problems will be prevented, systematically by design, in the first place.

The changes FSIS will effect with this final rule will eliminate this confusion and delineate clearly the respective responsibilities of FSIS and industry. The changes constitute a fundamental shift in the FSIS regulatory program, which FSIS is convinced will significantly enhance the effectiveness of the program and substantially reduce the risk of foodborne illness.

Preparing for HACCP Implementation

For the new FSIS food safety strategy, particularly HACCP, to be successful, FSIS must reconsider its current reliance on prescriptive command-and-control regulations and instead rely more on performance standards. Not only do command-and-control regulations prescribe the means by which establishments are to achieve a particular food safety objective, but they are susceptible of being enforced in a manner that leads to the inspector's substantial involvement in management decisionmaking. Performance standards, on the other hand, prescribe the objectives or levels of performance (such as pathogen reduction standards for raw product) establishments must achieve, but afford establishments flexibility in determining how to achieve those performance objectives. The shift to performance standards and the concomitant increase in flexibility for meat and poultry establishments reflect FSIS's commitment to stimulating the innovative capacity of the meat and poultry and allied industries to improve the safety of their products.

Command-and-control regulations are generally incompatible with HACCP and the FSIS food safety strategy, and conflict with the goal of reducing the

risk of foodborne illness on a continuing basis. They deprive establishments of the flexibility to innovate, one of the primary advantages of HACCP, and undercut the clear delineation of food safety responsibilities between industry and FSIS, on which the FSIS strategy is based. Therefore, to prepare for HACCP implementation, FSIS is conducting a thorough review of its current regulations and will, to the maximum extent possible, convert its command-and-control regulations to performance standards. (For a discussion of this regulatory reform initiative, see advance notice of proposed rulemaking published on December 29, 1995; Docket No. 95–008A; 60 FR 67469).

Inspection Under HACCP

HACCP-oriented food safety inspection changes FSIS's approach to overseeing the safety of meat and poultry products. Under this new approach, FSIS will rely less on after-the-fact detection of product and process defects and more on verifying the effectiveness of processes and process controls designed to ensure food safety. FSIS will restructure its inspection tasks and rely on review techniques aimed at systems designed for preventing problems that could lead to the production of unsafe meat or poultry products. FSIS will carry out various activities to ensure that industry HACCP systems meet the requirements of this rule, and are functioning as designed.

Beginning on the effective date of the regulation for a particular establishment, FSIS personnel will carry out a general review of an establishment's HACCP plan to determine its conformance with the seven HACCP principles. This evaluation will take place at the time of start-up or initial implementation of the HACCP plan for new establishments. Subsequently, special teams of FSIS personnel will work in conjunction with assigned inspectors to conduct in-depth reviews, on a regular basis, of the establishment's current HACCP plan to verify their scientific validity and ongoing adequacy for preventing food safety hazards. Further, at any time that the HACCP plan is revised or amended, FSIS personnel assigned to the establishment will review the plan to determine if it is in conformance with regulatory requirements.

FSIS will also carry out its verification activities by focusing on an establishment's ongoing compliance with HACCP-related requirements. Inspectors will be assigned to carry out the verification activities under HACCP-oriented inspection in much the same way as they receive their assignment schedules under the current system. A verification activity might include reviewing all establishment monitoring records for a process, reviewing establishment records for a production lot, direct observation of CCP controls as conducted by establishment employees, collecting samples for FSIS laboratory analysis, or verifying establishment verification activities for a process.

As HACCP-based process control is established in meat and poultry establishments, with its continuous monitoring by the establishment and oversight by FSIS, opportunities to incorporate new technologies and continuously improve food safety will be more readily identified. The continuous monitoring and verification of production processes and controls by the establishment and FSIS, which is an essential feature of the HACCP system, will set the stage for further food safety improvements.

Many commenters on the proposal expressed concern that the number of inspectors would decline and the quality of Federal inspection would diminish with HACCP implementation. FSIS expects HACCP to enhance the effectiveness of its meat and poultry inspection, not diminish it. Implementation of this final rule will clarify that the meat and poultry industries and FSIS have separate responsibilities for safety of the food supply. Industry will be required to establish process control systems for all forms of meat and poultry slaughter and processing and meet appropriate regulatory performance standards. By vigorous inspectional oversight of HACCP and reliance on objective test results and other observations to verify compliance with performance standards, FSIS inspectors will be better able to ensure that products leaving FSIS establishments are safe. Also, FSIS will be better able to allocate its resources to areas of greatest risk. HACCP implementation will move both industry and FSIS toward a more preventive approach to ensuring the safety of meat and poultry.

A cross-section of consumer groups, FSIS employees, and meat and poultry establishments stated that each livestock and bird carcass must continue to be examined by trained, experienced FSIS inspectors and veterinarians, even under a HACCP system. They stated that carcass-by-carcass inspection is essential to identifying animals with diseases that are transmissible to humans and other disease conditions causing animals to be unacceptable for human food. About 2,000 commenters maintained that HACCP is not, nor should it be, a substitute for carcass-by-carcass inspection by Federal inspectors.

Carcass-by-carcass inspection is a legal requirement that binds both FSIS and the industry. It also addresses nonsafety considerations that are not addressed by HACCP. Therefore, HACCP cannot substitute for carcass-by-carcass examination. However, in light of HACCP, which will improve process control in slaughter establishments, FSIS plans to examine current tasks related to carcass-by-carcass inspection and determine what changes, if any, could improve the effectiveness of inspection or result in a more productive use of resources.

Many commenters representing the meat and poultry industries argued that proposed pathogen reduction and HACCP system requirements layer an additional set of regulations and an additional program of inspection onto the current meat and poultry inspection system. These commenters recommended that FSIS review and revise or eliminate current regulations, directives and other FSIS guidance prior to finalizing the proposal as a means for ensuring they are compatible with pathogen reduction and HACCP requirements. Commenters stated that this review would not only mitigate inspection burdens imposed on industry by the proposal, but would facilitate the smooth implementation of pathogen reduction and HACCP requirements, as well.

FSIS agrees that regulations, directives, and guidelines should be consistent with HACCP and is currently reviewing regulations, directives, and other guidance materials governing meat and poultry inspection. Those regulations, directives, and guidance documents that are inconsistent or incompatible with HACCP principles and procedures will be amended or revoked. This task will not only ensure consistency throughout the regulations, directives, and other documents, but will reduce duplication and help focus inspection on the most serious risks to food safety.

Implementation Schedule

FSIS proposed to phase in implementation of HACCP during a 12 to 36-month period primarily on a process-by-process basis, except that all ''small'' establishments (defined as establishments with annual sales of less than $2.5 million) would be allowed the full 36 months to implement their HACCP plans.

FSIS received numerous comments on the proposed implementation schedule. Many commenters from meat and

poultry establishments said the proposed period for implementing HACCP was too short. These commenters requested more time to develop HACCP plans, train employees, and purchase or upgrade equipment. Many commenters requested that small businesses be granted more time to implement HACCP so they could amortize the costs of hazard analysis and plan development, equipment purchases, personnel training and records maintenance. A number of commenters suggested alternative timetables for implementation, ranging from three to fifteen years.

Several consumer groups argued that the proposed implementation schedule was too slow and would compromise public health because serious outbreaks of foodborne illness would continue to occur while establishments prepare for HACCP implementation. Some industry commenters said they were ready to implement HACCP immediately and expressed concern about whether and when the FSIS inspection force would be prepared to oversee HACCP implementation.

Also, several commenters requested a tiered implementation based on product risk. These commenters suggested that establishments which produce high-risk products, such as slaughter establishments or ground beef processors, be required to implement HACCP first and that establishments which produce low-risk products, such as canning establishments, be required to implement HACCP last.

Also, some commenters were concerned about the proposed phase-in period based on different types of product categories and processes because contaminated meat and poultry are known to come from a variety of sources. Commenters said that requiring establishments to implement HACCP at different times for different processes within an establishment would confuse establishment employees, inspection personnel and consumers. Consequently, these commenters suggested that HACCP be implemented simultaneously by all establishments.

Other commenters disputed the definition of small business used in the proposal. Recommendations for defining a small business included using fewer-than-500-employees definition developed by the Small Business Administration (SBA), using a definition reflecting volume of product or number of animals slaughtered, or using a definition based on the level of sales.

In response to concerns expressed by commenters, FSIS is modifying the implementation schedule for HACCP. The revised implementation schedule is based on the size of an establishment, that is, a business entity producing meat or poultry products at a location. Each establishment is required to implement HACCP simultaneously for all processes, rather than on a process-by-process basis. Large establishments (those having 500 or more employees) are required to implement HACCP 18 months after publication of this final rule. ''Small'' establishments are required to implement HACCP 30 months after publication. The definition of ''small'' establishment has been changed to correspond with SBA's size standards for business entities, and is now an establishment having 10 or more but fewer than 500 employees. A new category of ''very small'' establishments (those having fewer than 10 employees or less than $2.5 million in annual sales) will have 42 months to implement HACCP. All individuals employed on a full-time, part-time, temporary, or other basis at a given establishment must be counted as employees. This requirement corresponds with the SBA definition of employee set forth in 13 CFR 121.404.

FSIS is committed to bringing the Nation's meat and poultry supply under HACCP systems as rapidly as possible. Phasing in HACCP implementation is essential due to the logistical effort required to manage a fundamental change in work processes, roles, and responsibilities for both establishments and FSIS. The revised implementation schedule reflects the readiness of establishments of varying sizes to implement HACCP, the time needed by industry to develop HACCP plans and train employees, and the time needed by FSIS to train its employees.

The principal advantages of the revised implementation schedule are as follows:

1. Large slaughter establishments account for 75 percent of slaughter production and thus, most of the Nation's meat and poultry supply will come under HACCP-based process control one year earlier than originally proposed. Because the greatest risk of contamination with pathogenic microorganisms occurs during this initial stage of production, FSIS considers this a significant improvement over the original schedule in terms of expediting progress on improving the safety of meat and poultry products. The revised implementation schedule also ensures that approximately 45 percent of processed products will be produced under a HACCP system within 18 months. In comparison, only 25 percent of processed products would have been produced under HACCP systems at the 18-month mark based on the proposed implementation schedule.

2. By shifting initial implementation of HACCP from 12 months to 18 months after publication of the final rule, FSIS will have sufficient time to manage the transition to sanitation SOP's in all establishments, which will begin six months after publication of this final rule, and to train FSIS employees to implement HACCP. FSIS does not believe it could manage this transition and successfully implement HACCP in 12 months.

3. Eighteen months will provide ample time for the large establishments to comply. In fact, it is reasonable to assume that many of these establishments may implement HACCP before the deadline.

4. Implementing HACCP on the basis of establishment size will be simpler for both FSIS and establishments and much less disruptive for establishments with multiple processes. Under the proposal, these establishments would have faced multiple implementation dates (e.g., establishments that both slaughter cattle and grind beef).

5. The ''very small'' establishments will have an additional six months to implement HACCP. This will enable FSIS to complete the demonstration projects planned for ''small'' and ''very small'' establishments. The extra time will also ensure the availability of ''off-the-shelf'' HACCP training programs prepared by private or industry-sponsored consultants. Other FSIS implementation aids, such as model HACCP plans, audio, video, or computer training aids, and various publications such as guidelines, notices and pamphlets will have undergone extensive development as well.

Small Business Issues

FSIS recognizes that many smaller establishments lack the familiarity with HACCP that exists already in many larger establishments. Therefore, FSIS is planning an array of assistance activities that will facilitate implementation of HACCP in ''small'' and ''very small'' establishments.

FSIS is developing 13 generic HACCP models for the major process categories, which will be available in draft form for public comment, and in final form, at least six months before HACCP implementation. The generic models are being developed especially to assist ''small'' and ''very small'' establishments in preparing their HACCP plans. Because each HACCP system is developed by an individual establishment for its specific process and practices, the generic models will serve only as illustrations, rather than as

prescriptive blueprints for a specific HACCP plan. They should, however, remove much of the guesswork and reduce the costs associated with developing HACCP plans.

FSIS will also conduct HACCP demonstration projects for ''small'' and ''very small'' establishments during the two-year period following promulgation of this final rule. These projects will be conducted at various sites to show how HACCP systems can work for various products under actual operating conditions. Some of these demonstrations will involve ''very small'' establishments and will address issues unique to those establishments. For instance, how does a HACCP system function in an establishment with only a single employee? Through these demonstration projects, FSIS, State inspection authorities, participating establishments, and the industry at large will gain added understanding of the problems and techniques of HACCP implementation and operation in ''small'' and ''very small'' establishments.

FSIS is making available to ''small'' and ''very small'' establishments various HACCP materials that should assist these establishments in conducting their hazard analyses and developing their HACCP plans. These guidance materials include a ''Guidebook for the Preparation of HACCP Plans'' (Appendix C) and a ''Hazards and Preventive Measures Guide'' (Appendix D). These materials should be particularly useful to ''small'' and ''very small'' establishments that may lack the expertise for conducting hazard analyses and designing establishment-specific HACCP plans.

The ''Guidebook for the Preparation of HACCP Plans'' has been designed to provide ''small'' and ''very small'' establishments with a step-by-step approach for developing a HACCP plan and includes examples and sample forms at each step. The Guidebook can be used alone or in combination with the ''Hazards and Preventive Measures Guide.''

Because the development of an adequate HACCP plan depends on a good hazard analysis, the ''Hazards and Preventive Measures Guide'' develops HACCP Principle No. 1 in much greater detail than does the ''Guidebook for the Preparation of HACCP Plans.'' The hazards guide identifies potential biological, chemical, and physical hazards associated with a variety of raw materials and common ingredients, as well as major processes used in the meat and poultry industry. In addition, the hazards guide contains examples of preventive measures for common hazards and associated critical limits for those measures. Also provided are examples to illustrate approaches to implementing the remaining HACCP principles (e.g., monitoring, corrective actions, records, and verification procedures) for various hazards and critical control points.

FSIS invites comments and suggestions on how it may further ease the transition of ''small'' and ''very small'' establishments to HACCP-based operations.

Training Considerations

Many commenters, including consumer groups, FSIS employees, meat and poultry establishments, and State governments, agreed that proper training in HACCP procedures and plan development is vital for successful HACCP implementation. A number of commenters suggested that joint training sessions be held for FSIS and establishment employees to ensure uniform understanding between inspection personnel and industry. Others suggested that FSIS certify acceptable training sites and courses of study for establishment employees to coincide with government employee training. However, some commenters argued that FSIS should not accredit training programs because to do so would limit the development of training programs.

FSIS agrees that effective training of both FSIS and industry employees is critical to HACCP's success. FSIS also agrees that alternatives are needed to make training practical for various kinds of establishments. With these objectives in mind, FSIS is cooperating with the private sector to ensure that a wide variety of training options are available to industry and FSIS employees. For instance, FSIS is encouraging the International Meat and Poultry HACCP Alliance, national and local trade associations, State and local officials, the State agricultural extension services, and local colleges and universities to help establishments incorporate HACCP into their operations. The implementation conferences, discussed elsewhere in this preamble, will address how to achieve the goal of consistent training for FSIS and industry employees.

Other plans include offering HACCP briefings to industry at many locations nationwide. Each session will be led by FSIS HACCP trainers, will be held during the evening, be open to industry and other interested persons, and include a question-and-answer period. FSIS training sessions will be limited to FSIS and State employees because of complex logistical and cost considerations.

USDA's National Agricultural Library has developed and maintains the HACCP Training Programs and Resources Database. It is accessible via the Internet at ''http://www.nalusda.gov/fnic/foodborne/foodborn.htm'' or ''gopher://gopher.nalusda.gov/11/infocntr/fnic/foodborne/haccp'' and provides listings of available training programs (workshops, satellite conferences, etc.), resources (videotapes, software, manuals, textbooks, etc.), and consultants (individuals and companies). Other Internet servers with HACCP-related information are operated by various firms, governments, organizations, and academic institutions.

Several meat and poultry establishments also commented on funding for HACCP training, suggesting that FSIS or State inspection programs fund establishment employee HACCP training. FSIS is making every effort to assist establishments in making the transition to HACCP. However, each establishment will be responsible for training its employees.

Mandatory Versus Voluntary HACCP

Most commenters supported the FSIS proposal to make HACCP mandatory in all meat and poultry establishments. However, some commenters requested that HACCP be voluntary rather than mandatory to alleviate economic burdens, especially on small businesses. Commenters further suggested that, at such time as a voluntary HACCP program proved successful, FSIS could mandate HACCP or, alternatively, market forces and advancing technology could be relied on to ensure its broad acceptance in all parts of the meat and poultry industry.

FSIS has determined that a mandatory HACCP program is the only viable option that will effect adequate processing improvements in all establishments throughout the meat and poultry industries. Mandatory HACCP systems are supported by several prominent organizations, including the International Meat and Poultry HACCP Alliance and the American Meat Institute, which petitioned FSIS to initiate rulemaking to mandate HACCP. HACCP is now and has been voluntary; some establishments have it, most do not. The preamble to the proposed rule explained FSIS's conclusion, affirmed by most commenters, that HACCP is the optimal framework for targeting and reducing the many potential, but largely preventable, hazards associated with meat and poultry products. The risks of

foodborne illness associated with meat and poultry products will be minimized to the greatest extent possible only if HACCP systems are implemented in every establishment.

HACCP From Farm-to-Table

A large number of commenters requested that HACCP be required throughout all phases of food production, from the farm to the consumer. These commenters asserted that HACCP plans could be developed by producers, slaughterers, processors, retailers, food service operators, and restaurants to assess and mitigate food safety risks. Furthermore, many commenters claimed that the majority of foodborne illness cases can be attributed to mishandling at the consumer level and FSIS should therefore strengthen consumer education as well as require HACCP.

There is widespread agreement that ensuring food safety requires taking steps throughout the farm-to-consumer continuum to prevent hazards and reduce the risk of foodborne illness. FSIS is encouraging the active development of food safety measures to minimize public health hazards in animals presented for slaughter. A description of these farm-to-table efforts is discussed earlier in this document.

Total Quality Control (TQC) Establishments and HACCP

One commenter requested that establishments currently operating under the TQC provisions (9 CFR 318.4(c) and, 381.145(c)) be allowed to continue to operate under modified hours. If this is not the case, establishments currently under TQC will incur considerable overtime costs. The commenter asked why, if HACCP represents an improvement over TQC, the establishment operating under HACCP should require more inspection coverage than one operating under current TQC provisions.

This final rule does not alter current policies and practices regarding inspectional coverage and overtime charges in establishments operating under FSIS-approved TQC systems. HACCP is a safety-oriented system of process control that addresses food safety hazards differently than any current FSIS inspection systems, including TQC. Because TQC systems address considerations unrelated to safety, inspection practices developed by FSIS in connection with TQC may or may not be applicable to the implementation of HACCP.

Freedom of Information Act Concerns

Most commenters stated that HACCP records should not be available to requestors through the Freedom of Information Act (FOIA). Some said HACCP records should be used for verification only and should not be included in government files. Others also suggested that access to records by FSIS inspection personnel be restricted to records that are necessary for HACCP compliance monitoring, such as hazard analyses, HACCP plans, CCP monitoring records and corrective action documentation. Other commenters wanted to prohibit FSIS personnel from copying or removing any records from the establishment. Some commenters requested that HACCP records be generally available to the public.

In the preamble to the proposed regulation, FSIS stated that, as a preliminary matter, at least some elements of HACCP plans and monitoring records could be classified as trade secrets or commercial confidential information and may be protected from public disclosure under exemptions provided by FOIA and USDA and FSIS regulations promulgated pursuant to FOIA. FSIS specifically invited comment on the issue of public disclosure of HACCP records and on whether FSIS has any discretion about the releasability of HACCP records that it has in its possession.

Recordkeeping is critical to the successful functioning of HACCP systems in meat and poultry establishments. FSIS will have access to HACCP records and any other records FSIS regulations require. While the records required by this final rule are clearly within the establishment's domain and ownership, FSIS will have access to them. These records, and FSIS access to them, are necessary to effectuate a mandatory system of preventive controls to achieve food safety.

FSIS will continue to make use of documentation to which it has access when necessary to evaluate the operations of official establishments. Inspection personnel will normally review the records at establishments as part of routine HACCP oversight activities. When inspection personnel suspect that an establishment's HACCP system is not operating correctly, they will copy appropriate portions of establishment records, as needed, for further evaluation and possible enforcement action.

An establishment will not ordinarily be required to submit copies of HACCP plans, verification documents, or day-to-day operating records to FSIS. Consequently, FSIS will not normally possess establishment records that may be of a proprietary nature and the issue of whether they are releasable under FOIA should not arise.

Copies of establishment HACCP records may, however, be acquired by inspection personnel to document enforcement actions or otherwise assist FSIS in carrying out its responsibilities. The release by FSIS of information about establishments and their operations is governed by the FOIA. This statute requires Federal agencies to make available to the public agency rules, opinions, orders, records, proceedings, and information concerning agency organization and operations. FOIA provides exemptions from public disclosure for various kinds of information, including information concerning trade secrets and confidential commercial or financial information, and information compiled for law enforcement purposes, the release of which would be prejudicial or harmful to law enforcement or to the privacy rights or safety of individuals.

The FOIA disclosure exemption that is most likely to be relevant is that covering trade secret and confidential, commercially valuable information. FSIS's experience in meat and poultry inspection, its experience with HACCP, and its understanding from the cost-benefit modeling and other studies undertaken in the preparation of these regulations is that HACCP plans will take each establishment some time and money to develop, and will be considered by the establishment to be confidential. It follows that some HACCP plans will include confidential, commercially valuable information, meeting the definition of ''trade secret.'' Plans that incorporate unique time-and-temperature regimens to achieve product safety, or other parameters that are processor-specific and that are the result of considerable research and effort, will ordinarily meet this definition.

Moreover, a plan is valuable to the establishment that produces it for no other reason than that it took work to write. The equity in such a product is not readily given away to competitors. FSIS also knows from its own experience that establishment configurations tend to be unique to individual establishments, or at least have unique features. While generic plans will have great utility in many circumstances, they serve primarily as models for establishments to develop their own plans. Establishments will still have to expend time and money to tailor HACCP to their individual

circumstances. Thus, at least some HACCP plans or other records will include information to which FSIS has access but which FSIS will not be required to disclose publicly under FOIA.

It should be noted, in this regard, that FOIA is not a confidentiality statute, but has as its primary purpose the assurance of the public's right of access to Government information. Agencies must grant requests that ''reasonably describe'' information sought in agency files that is not exempt from mandatory disclosure. For this reason, FSIS understands that it cannot make promises of confidentiality that exceed the permissible boundaries established under FOIA.

FSIS Enforcement Authority and Whistleblower Protection

A large number of commenters requested that FSIS endorse enforcement tools contained in the proposed Family Food Protection Act (H.R. 1423, S. 515), including strengthened authority to refuse or withdraw inspection from official establishments, assessment by the Secretary of civil penalties for violations of the inspection laws, and protection of ''whistleblowers'' from harassment, discrimination, prosecution, and liability. Within the meaning of the proposed legislation, whistleblowers are employees or other persons who assist or demonstrate an intent to assist USDA in achieving compliance with the laws and regulations, refuse to violate or assist in violating the law, or are involved in commencing or testifying in a legal proceeding conducted by USDA.

FSIS has determined that, while additional legislative authority would be helpful in certain areas, it is not needed to implement HACCP and the other requirements established in this final rule.

As to whistleblower protection, many comments urged that these regulations include such protection for employees of meat and poultry slaughtering or processing establishments. Whistleblower protection is designed to protect workers from being fired or otherwise discriminated against for revealing wrongdoing by their employers. The wrongdoing in this case would presumably involve the forced falsification of HACCP records or other interference with proper operation of the HACCP system.

One concern raised by these commenters and others about the credibility of a HACCP system is that important records can be falsified. It is alleged that, without whistleblower protection, it is much less likely that FSIS will know about falsifications. It was also suggested that there is a need to encourage and protect employees who report food safety problems or other violations of the inspection laws.

While FSIS is confident that it can detect falsification in the course of its routine reviews of establishment records, coupled with in-plant observations, FSIS also expects that, as is now the case, it will be alerted by establishment employees to possible wrongdoing even in the absence of whistleblower protection. FSIS has relied on information provided by employees of the regulated industries for many years. From time to time, information is provided with an expectation that the identity of the informant will be kept confidential. FSIS provides this protection, to the extent possible. This policy has been effective.

As a legal matter, FSIS is not empowered by the FMIA and PPIA to build explicit whistleblower protection into the regulations. In contrast to the explicit statutory whistleblower protection accorded Government employees, the FMIA and PPIA do not provide for whistleblower protection for industry employees of the kind suggested by some commenters, and no such explicit protection is included in the final rule.

FSIS believes, however, that certain features of the HACCP regulations being adopted and the manner in which FSIS will inspect meat and poultry establishments compensate for the lack of formal whistleblower protection, for purposes of ensuring food safety. Most importantly, each establishment will be required to document, through records kept by establishment employees, that the critical limits required to ensure food safety are being met and when a failure occurs, proper corrective action is taken. The failure to document safety-related failures and to take necessary corrective action violates HACCP regulations and the establishment will be subject to appropriate regulatory action. Moreover, the falsification of required HACCP records is a serious violation of Federal criminal law and will be investigated and pursued aggressively by FSIS.

Establishments that conscientiously implement HACCP will, in the course of normal operations, support employee reports of HACCP deviations or other potential hazardous processing conditions and take immediate corrective action. HACCP systems in which employees with HACCP responsibilities are prevented or deterred from carrying out their responsibilities will be considered inadequate, and FSIS will pursue appropriate enforcement action.

By virtue of the extensive presence of FSIS inspectors in meat and poultry establishments and the daily access of FSIS inspectors to HACCP records, FSIS will be able to verify whether problems are being properly documented and addressed and will be able to observe potential food safety problems that establishments have not found or are not confronting in an appropriate manner. FSIS emphasizes that undetected or uncorrected conditions which are likely to cause foodborne illness or injury should be reported immediately to FSIS by any person with knowledge of their existence.

Enforcement and Due Process

A significant number of commenters raised concerns about the level of discretion inspection personnel will have in suspending establishment operations due to alleged deficiencies in either the design or the operation of a HACCP plan. Some urged FSIS to make clear to inspection personnel that such extreme actions are to be reserved only for situations in which continued operation of the establishment presents an imminent public health risk. Others strongly argued that operations should be suspended or inspection withdrawn when an establishment fails to comply with any HACCP requirements. Clarification was requested regarding the imposition of penalties and, specifically, what circumstances would warrant suspension of operations or withdrawal of inspection.

Generally, the nature of the enforcement action taken will vary, depending on the seriousness of the alleged violation. Minor violations of the HACCP requirements may be recorded by Agency personnel to determine establishment compliance trends. Minor violations may also result in intensified inspection to ensure that there is no pattern of noncompliance and that there is no underlying food safety concern.

Conversely, serious, repeated, or flagrant violations will result in immediate regulatory action, such as stopping production lines; applying ''U.S. Rejected'' tags to involved equipment, lines, or facilities; retention of product, and suspension or withdrawal of inspection. Because of the importance of recordkeeping to the functioning of HACCP systems and the production of foods that are safe for human consumption, FSIS views recordkeeping as a serious matter with potentially grave implications if records are not properly maintained or are falsified.

Many commenters were troubled by what they perceived to be limited procedural due process afforded to establishments when faced with the suspension of inspection due to a finding that the HACCP plan is inadequate. FSIS agrees that all findings of inadequacy should be sound scientifically and legally, and that suspensions should not be invoked in an arbitrary manner. The optimal system would provide an appropriate level of protection to establishments without unnecessary delay, especially where no factual dispute is likely.

Based on the comments received on this issue, FSIS has decided not to finalize the proposed Rules of Practice at this time. FSIS is interested in receiving comments and suggestions on enforcement, alternative dispute resolution, and due process issues, and has included these topics for discussion at the implementation conferences. On the basis of the conference discussions, FSIS will complete any required rulemaking covering these issues prior to the first implementation date for HACCP.

The Final Rule

Reorganization of HACCP Regulatory Text

FSIS has reorganized the codified regulatory text proposed in the Pathogen Reduction/HACCP proposal and reworded a number of the provisions. These changes have been made in response to comments received on the proposal, for the sake of greater clarity and ease of use, and to conform with FSIS's planned reorganization and consolidation of all its meat and poultry inspection regulations. In general, the final HACCP regulations are more streamlined than the proposed provisions, organized in a more logical form, and less prescriptive than the proposed regulations. Also, as part of the FSIS and FDA effort to adopt a common approach to food safety (described in the January 1996 National Performance Review document ''Reinventing Food Regulations''), FSIS has made changes to the proposed regulatory text, where applicable, to be consistent with FDA's final rule on HACCP systems for seafood (60 FR 65096; December 18, 1995).

To the extent possible, the HACCP requirements for both meat and poultry products have been consolidated in a new part 417.

Requirements affecting grants or refusals of inspection have been moved to a new § 304.3 and a new § 381.22.

FSIS received approximately 7,500 written and many oral comments on the proposed rule from meat and poultry slaughter operations, processors, retailers, trade and other associations, consumer advocates, the scientific and public health community, Federal and State government agencies and foreign governments, employees, and other interested parties. While a majority of these commenters supported the proposal to require adoption of HACCP by meat and poultry establishments, they differed widely regarding plan development, implementation, and related issues. Comments on the specific proposed regulatory requirements and FSIS's responses, follow.

HACCP Systems as a Condition of Receiving Inspection

Proposed § 326.7(a)(2) and § 381.602(a)(2) would have permitted the issuance of a grant of inspection concurrent with a new establishment's development and validation of its HACCP plan. This provision is confusing because it is unclear how an establishment can develop and validate its HACCP plan ''concurrent'' with the granting of inspection when the HACCP plan can only be validated on the basis of commercial operations and the establishment can operate commercially only under inspection. Therefore, it would be impossible for an establishment to validate a HACCP plan prior to receiving a grant of inspection, as proposed. A number of commenters noticed this difficulty and requested that establishments be allowed a reasonable amount of time under commercial production to validate their HACCP plans.

Commenters also disagreed with the proposed HACCP plan development timetable for new establishments or establishments producing new products or those conducting product test production runs. Some said that new establishments and establishments producing new products or conducting test runs subsequent to the applicable HACCP effective date should have at least six months or up to two years to finalize HACCP plans. Others said that all HACCP plans should be developed before start-up with revisions allowed within a reasonable period.

FSIS is in basic agreement with these comments and is revising the basic procedures for granting inspection to allow establishments time to validate their HACCP plans. The provisions in §§ 304.3(b) and 381.22(b) require that any new establishment conduct a hazard analysis and develop a HACCP plan prior to being issued a conditional grant of inspection. The establishment must validate its HACCP plan within 90 days after the conditional grant of inspection is issued. After FSIS has determined that the establishment has validated its HACCP plan, a permanent grant of inspection will be issued. An establishment already receiving inspection may produce a new product for distribution only if it has developed a HACCP plan applicable to the product and validates the plan within 90 days after beginning production of the product.

FSIS is requiring that new facilities and products be covered by a HACCP plan at the time commercial production begins. Establishment management is expected to consider development of HACCP systems as part of essential pre-production decisions for new operations. Establishments are also expected to modify their HACCP plans as needed based upon experience and reported results. FSIS has determined that no start-up time is needed in these instances since the establishment will not be experiencing any transition from an old system to a new processing system.

FSIS is considering what further changes may be necessary in the procedures for granting and inaugurating inspection at official establishments to better accommodate HACCP-oriented inspection. FSIS plans to publish a notice of proposed rulemaking on this matter in the near future.

Definitions

Proposed §§ 326.1 and 381.601 have been combined, streamlined, and redesignated as § 417.1. Thirteen proposed definitions were determined to be commonly understood or unnecessary and have been removed. Of the seven definitions remaining, the definitions for ''critical control point,'' ''critical limit,'' ''HACCP system,'' and ''responsible establishment official'' have been clarified. For example, the definition of ''critical control point'' includes the phrase ''as a result'' to indicate that the prevention, reduction, or elimination of a food safety hazard occurs because of action taken at the critical control point. The definition of ''responsible establishment official'' has been expanded to include the individual with overall authority or a higher level official of the establishment.

The revised definitions are consistent with those promulgated in FDA's final rule on HACCP systems for seafood. For example, FSIS has added a new definition to § 417.1 for the term ''process-monitoring instrument.'' This term is defined as ''an instrument or device used to indicate conditions during processing at a critical control

point.'' FSIS determined that this definition would be helpful to establishments developing HACCP plans.

Hazard Analysis and HACCP Plan

The proposal required each establishment to develop and implement a HACCP plan which incorporated the seven HACCP principles. A hazard analysis was to be conducted to identify biological, chemical and physical hazards and a list of steps in the process where potentially significant hazards could occur and the preventive measures to be taken were to be identified.

Provisions relating to the hazard analysis and development of the HACCP plan were proposed as §§ 326.2 and 381.602, ''Development of HACCP Plan,'' §§ 326.3 and 381.603, ''HACCP Principles,'' and §§ 326.4 and 381.604, ''Implementation of the HACCP Plan.'' These provisions have been modified and incorporated into § 417.2.

Several commenters argued that in the event the hazard analysis identified no significant hazards, the establishment should be exempt from developing HACCP plans and operating under a HACCP system. Commenters identified lard and meat flavoring manufacturers and canning operations as examples of establishments that may identify no hazards.

To clarify the concept of potentially significant hazards, and to be consistent with the FDA final rule on HACCP systems for seafood, the final rule requires each establishment to conduct, or have conducted for it, a hazard analysis to determine the food safety hazards reasonably likely to occur in the production process. A food safety hazard that is reasonably likely to occur is defined as one for which a prudent establishment would establish controls because it historically has occurred, or because there is a reasonable possibility that it will occur in the particular type of product being processed, in the absence of those controls.

FSIS agrees that if an establishment's hazard analysis reveals no hazards, then no HACCP plan would be required. However, FSIS is currently unaware of any meat or poultry production process that can be deemed categorically to pose no likely hazards. With regard to the lard and meat flavoring examples, FSIS believes that reasonably likely biological and physical hazards requiring control measures exist in establishments manufacturing these products and that, therefore, HACCP plans are required.

FSIS agrees that the microbial hazards associated with canned meat and poultry products are eliminated by complying with the regulations in 9 CFR §§ 318.300–311 and 381.300–311. These regulations are based on HACCP concepts and provide for the analysis of thermal processing systems and controls to exclude microbial hazards. Accordingly, the final rule provides that HACCP plans for thermally processed/commercially sterile products do not have to address the food safety hazards associated with microbiological contamination if the product is produced in accordance with the canning regulations. However, because the current regulations exclusively address microbial hazards, processors of canned meat, meat food and poultry products must develop and implement HACCP plans to address chemical and physical hazards that are reasonably likely to occur.

The current canning regulations contain numerous prescriptive features, including extensive FSIS involvement in the decisionmaking process, that are inconsistent with the philosophy underlying HACCP. In the advance notice of proposed rulemaking ''FSIS Agenda for Change: Regulatory Review'' (60 FR 67469; December 29, 1995), FSIS stated its intention to convert the canning regulations to performance standards, which are more consistent with HACCP. Until changes in the canning regulations are finalized, canning establishments do not have to address microbial hazards in their HACCP plans.

The provisions of proposed § 326.3(a), (a)(1), and (a)(2), and § 381.603(a), (a)(1), and (a)(2) relating to process flow charting and the identification of intended uses and consumers of the product have been combined in the final rule into § 417.2(a)(2).

Proposed §§ 326.2(b) and 381.602(b) would have required that any HACCP plan be developed with assistance of a HACCP-trained individual employed by the establishment, that the individual's name and resume be on file, and that the individual meet other prescriptive requirements. These requirements have been removed in response to criticism expressed in comments received and for reasons given below in the discussion of § 417.7. The new § 417.2(a)(1) permits someone other than an establishment employee to conduct the hazard analysis.

Proposed §§ 326.3(a) and 381.603(a) would have required a hazard analysis to identify any biological (including microbiological), physical, or chemical hazards. In § 417.2(a)(3), FSIS lists ten areas that should be considered by an establishment when performing its hazard analysis. These ten areas are: natural toxins; microbiological contamination; chemical contamination; pesticides; drug residues; zoonotic diseases; decomposition; parasites; unapproved use of direct or indirect food or color additives; and physical hazards. This list of possible hazards provides more complete guidance to establishments conducting a hazard analysis; it responds to industry comments criticizing as ''vague'' the proposed definition of hazard; and it is also consistent with the list of hazards in FDA's final rule on HACCP systems for seafood.

Proposed §§ 326.2(a) and 381.602(a) would have required that establishments develop, implement, and operate a HACCP plan for each process conducted by the establishment, and provided a list of process categories subject to this requirement. Section 417.2(b) provides that each establishment develop and implement a HACCP plan covering each product produced, whenever its hazard analysis reveals one or more food safety hazards that are likely to occur. This requirement is substantively the same as the proposal.

Section 417.2(b)(1) provides a revised list of process categories, while § 417.2(b)(2) states that a single HACCP plan may encompass multiple products within a single processing category, if the hazards, CCP's, and critical limits are essentially the same, and as long as any plan features that are unique to a specific product be clearly set out in the HACCP plan and observed in practice. For example, an establishment's HACCP plan for the processing of cooked sausage might cover bologna, knockwurst, and frankfurters that the establishment produces.

Proposed §§ 326.2(d) and 381.602(d) would have required that the HACCP plan be developed in two stages, both to be completed six months prior to the phase-in date of the applicable process category or upon application for inspection or when a new process is ready for implementation. FSIS has eliminated these requirements because they are impractical.

Proposed §§ 326.2(d)(1) and 381.602(d)(1) would have required that every HACCP plan be in a format similar to the NACMCF and FSIS generic models. FSIS agrees with those commenters who found this proposed requirement to be unnecessary and too prescriptive, and has not included this requirement in the final rule.

Proposed §§ 326.3 and 381.603 set forth the seven HACCP principles accompanied by the corresponding requirements establishments must meet when developing HACCP plans. In response to comments that the detailed

provisions were unnecessary, FSIS has set forth in § 417.2(c) a simplified list of requirements, based on the seven HACCP principles, to be met by establishments when developing HACCP plans. The proposed requirements remain, except for the following additions, unchanged.

Two subparagraphs have been added to new § 417.2(c)(2), clarifying the requirements for the identification of CCP's within a HACCP plan. This new section requires that establishments list in their HACCP plan the CCP's for each of the identified food safety hazards, including, as appropriate: (1) CCP's designed to control food safety hazards that could be introduced in the establishment, and, (2) CCP's designed to control food safety hazards that may have been introduced into the product before, during and after its entry into the establishment. In response to comments objecting to the proposed requirement for establishments to use a decision tree in identifying CCP's (proposed § 326.3(b) and 381.603(b)), this requirement has been removed from the final rule.

Proposed §§ 326.4 and 381.604 would have required that a responsible establishment official, formerly defined as ''the management official located on-site at the establishment who is responsible for the establishment's compliance with this part,'' review, approve, and sign the HACCP plan. Section 417.2(d)(1) requires that the HACCP plan be signed by the responsible establishment official, defined as the individual with overall authority on-site or a higher level official of the establishment, possibly off-site. Further, in § 417.2(d)(2), FSIS is correcting an oversight in the proposal by requiring that the HACCP plan must be signed and dated upon initial acceptance by the establishment and at any time the plan is modified. The proposal required that the responsible establishment official sign the plan upon completion of the hazard analysis and the development of the HACCP plan. The HACCP plan must also be signed and dated at least once each year after the required reassessment.

Finally, FSIS explicitly states its statutory authority to enforce the HACCP regulations under § 417.2(e), providing that if an establishment fails to develop and implement a HACCP plan or to operate in accordance with the requirements of this part, the products produced by the establishment may be deemed adulterated.

Corrective Actions

Proposed §§ 326.3(e) and 381.603(e) would have required that each establishment develop corrective actions to be taken when there is a deviation from an established critical limit. Under the proposed provisions, if a deviation were found, the establishment would describe the steps taken to identify and correct the deviation, determine how noncompliant product would be handled, ensure that no safety hazards exist after the corrective actions are taken, and define measures to prevent recurrence. Further, this section required that the establishment determine whether its HACCP plan required modification and, if so, to modify the plan.

Many commenters stated that establishments should be empowered to make decisions on product safety. Commenters generally maintained that the establishment should have primary responsibility for setting the CCP's and critical limits and for taking corrective action when there is a deviation. Inspectors should verify the overall effectiveness of the HACCP plans, including the corrective actions taken by establishments. A number of commenters were concerned about the possibility that FSIS might take action on a product if a critical limit in the establishment's HACCP plan was not met, even if the establishment were taking corrective action under the plan. Commenters felt that this action by FSIS would be unwarranted. An additional concern was that the potential for this type of problem would be compounded if the establishment set a critical limit more restrictive than necessary for food safety to meet quality standards, for example, a higher cooking temperature than necessary to produce a pathogen-free product.

The establishment must take corrective action for any deviation from a set critical limit. FSIS will verify that the establishment has taken appropriate corrective action as specified in their HACCP plan. If an establishment fails to take corrective action as specified in its HACCP plan, FSIS may find that the HACCP system is inadequate pursuant to § 417.6(c). FSIS agrees that establishments should be empowered to make decisions regarding product disposition in accordance with corrective actions specified in their HACCP plans. FSIS is requiring (§§ 417.2(c)(5) and 417.3) that establishments describe in their HACCP plans the corrective actions that will be taken if a critical limit is not met and assign responsibility for taking corrective action. Corrective actions must ensure that no product that is injurious to health or is otherwise adulterated as a result of the deviation enters commerce, that the cause of the deviation is identified and eliminated, that the CCP will be under control after the corrective action is taken, and that measures to prevent recurrence are established.

FSIS recognizes that preestablished corrective actions may not cover every contingency and that unforeseen hazards or deviations may occur. Thus, § 417.3 of the regulations provides a series of steps to be taken in such situations. These steps include segregating and holding affected product and conducting a review to determine the acceptability of the product for distribution, ensuring that any adulterated product or product otherwise injurious to health does not enter commerce, and reassessing HACCP plans to determine if any modification is needed.

Validation, Verification, and Reassessment

Proposed §§ 326.3(g) and 381.602(g) would have required that establishments develop procedures for HACCP plan validation by an adequately trained individual, and set forth the related requirements. Proposed §§ 326.4 and 381.604 further detailed the validation requirements, stating that during the validation period, establishments shall conduct repeated verifications of the plan, hold frequent meetings with Program employees, and review records generated by the HACCP system. Under the proposal, establishments were to modify their HACCP plan following any ingredient change, product reformulation, manufacturing process or procedure modification, equipment change, or any other such change. Revalidation of an establishment's HACCP plan would have been required whenever significant product, process, deviations, or packaging changes required modification of the plan.

Many commenters expressed confusion about the meaning of the terms ''validation'' and ''verification'' as used in the proposed rule. The question of who will be responsible for validating HACCP plans was raised by a number of commenters. Some requested a clearer definition of the term ''validation'' as well as clarification of who will approve and verify a HACCP program. Particular concern was expressed about what role local inspection personnel will have in the HACCP plan development and approval process. Some said that FSIS should assume more responsibility for approving HACCP plans through a prior approval system; others argued that no formal acceptance or prior approval of

HACCP plans by FSIS should be required.

In the final rule, FSIS has clarified the concepts of ''validation'' and ''verification'' by delineating the responsibilities of FSIS and establishments in separate codified sections. The initial validation, ongoing verification, and reassessment procedures to be followed by establishments are presented in § 417.4 and FSIS's verification procedures are presented in § 417.8.

Because prior approval of HACCP plans by FSIS would be contrary to redefined roles and responsibilities inherent in the HACCP philosophy, FSIS will not approve or validate HACCP plans before an establishment implements its HACCP system. Each establishment will be responsible for developing its HACCP plan and ensuring its adequacy.

Commenters opposed to FSIS involvement in plan validation offered two suggestions: (1) establishments could use an independent third party, such as a processing authority or consultant with HACCP expertise to validate HACCP plans or (2) HACCP-trained establishment employees could validate plans.

FSIS concurs. Establishments will be required to have validated plans and may use independent consultants, process authorities, or establishment employees trained in accordance with § 417.7 for plan development and validation. FSIS is not prescribing that any particular validation method be used.

Some establishments may choose to use the services of laboratories or processing authorities to validate their CCP's, especially if there are questions about the effectiveness of traditional controls, or if they are considering use of controls which have not been previously validated, such as cooking time/temperature combinations. However, many establishments will choose to rely on CCP's that have been scientifically validated and reported in the literature. In either case, FSIS believes that requiring individual establishments to validate their HACCP plan ensures that the CCP's and the overall HACCP plan work as intended in the establishment to reduce or eliminate hazards and prevent the production of unsafe food.

One industry member observed that his company defines validation as documenting that a critical control point eliminates or effectively addresses microbiological hazards.

FSIS agrees that validation includes documenting that critical control points effectively address relevant hazards, including such microbiological hazards as *E. coli* O157:H7, *Salmonella,* and *Campylobacter,* but emphasizes that validation is more than just the accumulation of microbiological data verifying each CCP. It involves scientifically demonstrating that a HACCP system as designed is effective in controlling the food safety hazards identified through the hazard analysis.

One academic commenter advocated inoculation studies using pathogens as the best way to assure that a HACCP plan will effectively control microbiological hazards. Such studies would be conducted before HACCP implementation and should be aimed at demonstrating that selected CCP's are appropriately monitored to control specific pathogens. The studies would be performed under controlled conditions in off-site laboratories or pilot establishments. One advantage of this approach, according to the commenter, would be to permit validation studies to be conducted by trade associations and other industry groups on a collective basis in a way that could benefit both large and small establishments.

FSIS agrees that validation of CCP's is an important part of HACCP plan validation, and that laboratory inoculation studies as suggested by the commenter can make an important contribution in appropriate cases. Inoculation studies can demonstrate the effectiveness of particular controls in addressing particular hazards under experimental conditions, and can produce data that can be relied upon by many establishments to support plan validation. In no case, however, would a laboratory inoculation study or any laboratory study be sufficient by itself to validate a HACCP plan. An important element of validation is the identification or development of data which show that the establishment can apply the process or control to get the anticipated effect under actual in-plant operational conditions. For some well-established, widely used processes or technologies, in-plant validation can be accomplished by combining existing scientific data from laboratory studies, the scientific literature, or other sources, with the results of commercial trials using recognized protocols. Where processes are well-documented in the scientific literature, it is not necessary to require inoculation studies or any other research effort as part of the validation process. However, an establishment introducing a new technology, applying standard technology in an unusual way, or lacking experience with a technology, would have to undertake more extensive scientific and in-plant validation of its HACCP plan under commercial operating conditions.

Data assembled to validate a HACCP plan are usually of two types: (1) theoretical principles, expert advice from processing authorities, scientific data, or other information demonstrating that particular process control measures can adequately address specified hazards, such as studies establishing the temperatures necessary to kill organisms of concern; and (2) in-plant observations, measurements, test results, or other information demonstrating that the control measures, as written into a HACCP plan, can be operated within a particular establishment to achieve the intended food safety objective. This means that the data used to validate a HACCP plan may be derived from various sources, including the scientific literature, product testing results, experimental research results, scientifically based regulatory requirements, FSIS guidelines, computer-modeling programs, and data developed by process authorities. The nature and quantity of information required to validate a HACCP plan will vary depending on factors such as the nature of the hazard and the control measures chosen to address it.

FSIS believes that validation data for any HACCP plan must include some practical data or information reflecting an establishment's actual early experience in implementing the HACCP plan. This is because validation must demonstrate not only that the HACCP plan is theoretically sound, but also that this establishment can implement it and make it work. For example, steam vacuuming has been scientifically demonstrated to be effective in removing visible contamination and associated bacteria from carcass surfaces. A slaughtering establishment using the technology as a control measure at a CCP, however, would still have to demonstrate its ability to use the technology effectively at the CCP.

Establishment verification is intended to show that the HACCP system is actually working effectively on a day-to-day basis. Verification also includes repeatedly reviewing and evaluating the various components of the system. Verification activities include checking the adequacy of the critical limits; reviewing monitoring and recordkeeping procedures (as distinguished from monitoring the CCP's), and evaluating the adequacy of corrective actions.

One consumer group stated that FSIS should require that establishments identify the specific microbiological hazards that their HACCP plans are

designed to address, and validate and verify the plans using pathogen-specific testing to ensure that establishments control these hazards.

FSIS agrees that establishments must identify the specific microbiological hazards their HACCP plans are designed to address and that the plan must be initially validated and continually verified as effective in addressing those hazards. FSIS also agrees that pathogen-specific testing can play an important role in both initial validation and verification.

For example, in validating the adequacy of a beef slaughter HACCP plan addressing the hazard posed by *E. coli* O157:H7, laboratory inoculation studies involving pathogen-specific testing could be used to validate the effectiveness of the specific control measures that an establishment is considering for incorporation in its HACCP plan. As discussed above, to complete the validation of the control measures for *E. coli* O157:H7, the establishment would also be required to demonstrate that the experimentally validated measures can be successfully carried out under actual operating conditions, but, for *E. coli* O157:H7 on going verification is unlikely to include in-plant testing for the pathogen due to its relatively infrequent occurrence.

In-plant testing to verify a control measure may be appropriate with other pathogens, however. For example, a poultry slaughter establishments would be required to validate and verify the effectiveness of its HACCP plan in addressing the hazards posed by *Salmonella* and *Camplylobactor.* Depending on the nature of the control measures the establishment selects, in-plant pathogen testing could be a necessary and practical component of an on-going verification for these pathogens as they are present in sufficient numbers to make in-plant testing feasible and informative. FSIS intends to work closely with industry at large and with specific establishments in particular to ensure that HACCP plans are adequately validated and verified for microbial pathogens of public health concern.

Verification of HACCP plans by establishments is designed to demonstrate that the HACCP plan is accomplishing process control and resulting in the production of safe food on a continuing basis. Verification is distinct from ongoing establishment monitoring, which is designed to provide a record showing that the written HACCP plan is being followed. Establishment verification activities should provide practical results specific to the operation of its HACCP plan, and can include review of CCP-monitoring records; review of corrective action records; calibration of process-monitoring instruments; collection of either in-line or finished product samples for microbiological, chemical, or physical analysis; and direct observations of monitoring activities and corrective actions. Frequencies for conducting verification activities will vary, depending on various factors, such as the type of process and volume of products, the results of prior verification activities, consistency of conformance with the HACCP plan, how deviations are handled, and the results of any sampling activities.

The record-verification could include determining whether the critical limit for the CCP, as called for in the HACCP plan, matches the critical limit indicated in the records. The verification could also involve checking to assure that the critical limit as set in the establishment's HACCP plan is adequate to prevent a hazard. For example, this check might involve determining whether the random variations inherent in any process are within the limits (temperature ranges, physical contamination) set for the process, and that the critical limit is never exceeded or, further, that the probability that the critical limit might ever be exceeded is extremely low.

The visual observations and records verification could include, in addition to seeing that the records are being properly maintained, assuring that corrective actions have been taken whenever any deviations have occurred and that, when taken, the corrective actions were sufficient to solve the problem.

FSIS has made two minor changes from the proposed validation and verification requirements. First, FSIS has removed the proposed requirement that during validation an establishment hold frequent meetings with Program employees. FSIS recognizes that frequent meetings may not be necessary or appropriate. Also, § 417.4(a)(2) provides that the establishment's ongoing verification activities include direct observation of monitoring activities and corrective actions, review of records, and calibration of process-monitoring instruments. An establishment calibrates its monitoring instruments to determine whether they are functioning properly.

Reassessment

The proposed rule would have required that establishments revalidate the HACCP plan whenever significant product, process, deviations, or packaging changes required modification of the plan.

A consumer group stated that establishments should be required to examine their plans on a regular basis, whenever any new equipment is introduced, new employee training is implemented, or for any other significant change in the processing environment. The commenter further stated that revalidation should be required of establishments every three years even if there has been no significant change in operations. Most commenters generally agreed that the industry has the primary responsibility to review and modify HACCP plans when necessary and that the review and modification process should be flexible.

FSIS agrees that HACCP plans should be reexamined periodically and that the review and modification process should be flexible. The final rule requires that each establishment reassess the adequacy of its HACCP plan at least annually, and whenever any changes occur that could affect the hazard analysis or alter the HACCP plan (§ 417.4(a)(3)). These changes may include, but are not limited to, changes in: raw materials or source of raw materials; product formulation; slaughter or processing methods or systems; production volume; personnel; packaging; finished product distribution systems; or the intended use or consumers of the finished product. The reassessment must be completed by an individual trained in accordance with § 417.7. Immediate modification of the plan is required if the reassessment reveals that the plan is no longer adequate to meet the requirements of part 417. FSIS is also requiring that an establishment that does not have a HACCP plan reassess its hazard analysis whenever a change occurs that could reasonably affect whether a food safety hazard exists.

FSIS considers annual reassessment appropriate because, as commenters have noted, HACCP plans are dynamic and evolving. HACCP plans may be modified several times during the months after they are first implemented. Further, repeating the entire validation process may not be necessary to ensure that the HACCP system is functioning correctly after modification.

The intent of this provision is to provide for periodic modification of the HACCP plan to ensure that it is continuously effective in controlling and preventing food safety hazards. This intent is supported by comments received from various sectors of the public. The commenters tended to see periodic review and modification of HACCP plans as both desirable and

expected and that periodic review and modification would allow the establishment to apply its experience to continually improve process controls.

FSIS believes that ''reassessment'' encompasses the different types of evaluation, from reanalyzing the verification procedures for an updated CCP to repeating the validation procedures set forth in § 417.4, that may be necessary.

FSIS Verification

Verification of HACCP plans is also a regulatory responsibility. FSIS will verify that HACCP plans comply with the requirements of Part 417 and have been validated by the establishment. Potential verification activities by FSIS may include, but are not limited to, sampling activities (targeted and non-targeted, marketplace, rapid screening tests for chemical residues); hands-on verification (organoleptic inspection, use of temperature or other monitoring devices); and review of establishment monitoring records. The frequency of FSIS verification activities will vary, depending on a number of factors such as the establishment's past performance, risk inherent in the processes or products, quantity of product, and likely uses.

A consumer group stated that as part of its verification activities, FSIS should review all pathogen data generated by the establishment to determine the adequacy of the establishment's conclusions regarding pathogen control. FSIS plans to undertake extensive and varied activities to verify that a HACCP plan is working as intended, including review of data generated or relied on by the establishment to validate its HACCP plan.

Proposed §§ 326.7(b) and 381.607(b) set forth FSIS's responsibilities with respect to verification activities. These provisions have been slightly revised for clarity and are consolidated in § 417.8.

Records

Proposed §§ 326.6(b) and 381.606(b) listed the types of records every establishment would have been required to maintain regarding their operations under HACCP. The list included the written HACCP plan, hazard analysis, records associated with CCP monitoring, corrective actions, verification procedures and results, product codes, identity, and slaughter production lot, the dates of the records, and supporting documentation for the various features of the HACCP plan. FSIS also proposed to require a preshipment review of processing and production records associated with the HACCP plan to ensure that the records were complete, that all critical limits were met, and, if applicable, that corrective actions were taken. The review was to be performed by someone other than the person who created the records, preferably by a HACCP-trained individual, or by the responsible establishment official. FSIS considers the preshipment record review a routine verification function under HACCP principle No. 7.

FSIS also proposed that establishments retain all required records on site at all times, except those records concerning monitoring CCP's, corrective actions, and verification procedures were to be retained at the establishment for no less than one year, and for an additional two years at the establishment or other location from which the records could be made available to Program employees.

Regarding the preshipment review of records, several small establishments commented that there may not be a person other than the person who created the record available to conduct the preshipment review. Several large establishments were concerned that a HACCP-trained individual may not be available to conduct the preshipment review. FSIS has modified this requirement by stating that the preshipment review shall be conducted by someone other than the person who produced the records where practicable. Also, FSIS has retained the provision that the review be conducted preferably by an individual trained in accordance with § 417.7 or the responsible establishment official.

Some commenters recommended that FSIS allow the use of electronic or computerized recordkeeping systems to ease the burden of the proposed recordkeeping requirements. In response to these comments, FSIS has added a new § 417.5(d) which provides for the maintenance of data and information on computers, as long as controls are implemented by the establishment to ensure the integrity of the data and signatures.

Commenters also raised concerns regarding proposed record retention requirements, maintaining that keeping HACCP records for a minimum of three years would be excessive. Commenters requested flexibility in deciding how long to retain records; many stated that retention should be based on product shelf-life. In response to these commenters, FSIS has modified this requirement to provide that records required by § 417.5(a)(3) be retained at the establishment for one year if they pertain to slaughter activities or refrigerated products, and for two years if they pertain to frozen, preserved, or shelf-stable products.

To further ease the recordkeeping provisions for establishments, FSIS will permit the off-site storage of records required by § 417.5(a)(3) that are over 6 months old if the records can be made available to Program employees within 24 hours of the request. The records required by § 417.5 (a)(1) and (a)(2), however, are not eligible for off-site storage.

Proposed §§ 326.6 and 381.606 would have provided that records be made available to Program employees. Section 417.5(f) clarifies that all records required by part 417 be available to Program employees for review and copying.

For clarity, FSIS has reworded the recordkeeping provisions to require that the establishment maintain the written hazard analysis and all supporting documentation, the written HACCP and all decisionmaking documents associated with the selection and development of CCP's and critical limits, and documents supporting both the monitoring and verification procedures selected and the frequency of those procedures. Records documenting the monitoring of CCP's and critical limits, corrective actions, verification procedures and results, product code(s), product name or identity, or slaughter production lot must also be maintained. Each record must include the date the record was made. To be consistent with FDA's final rule on HACCP systems for seafood, FSIS has also added a requirement that records relating to the calibration of process-monitoring instruments be maintained.

Training

FSIS proposed two definitions related to training: ''HACCP-trained individual'' and ''recognized HACCP course.'' ''HACCP-trained individual'' was defined as ''a person who has successfully completed a recognized HACCP course in the application of HACCP principles to meat or poultry processing operations, and who is employed by the establishment. A HACCP-trained individual must have sufficient experience and training in the technical aspects of food processing and the principles of HACCP to determine whether a specific HACCP plan is appropriate to the process in question.'' A ''recognized HACCP course'' was defined as ''a HACCP course available to meat and poultry industry employees which satisfies the following: consists of at least 3 days, 1 day devoted to understanding the seven principles of HACCP, 1 day devoted to applying these concepts to this and other regulatory requirements of FSIS, and 1 day devoted

to beginning development of a HACCP plan for a specific process.''

Some commenters thought that defining a HACCP-trained individual was unnecessary, that the role of such a person in operating HACCP systems should be analogous to the role of the processing authority in canning operations.

A few commenters questioned the effectiveness of the proposed three-day training requirement stating it would not sufficiently qualify a person to implement or operate a HACCP system. Some commenters asserted that the detailed course composition with no FSIS certification of courses was inadequate and too rigid. Others insisted that what is needed is a common understanding of the basic principles of HACCP and of how HACCP can be applied to specific processes and establishments, with no FSIS certification of courses.

FSIS has revised the regulations, which are now codified in § 417.7, to simplify the proposed training requirements. The proposed definition and requirements for a HACCP-trained individual have been removed. Section 417.7 requires that individuals performing certain functions must have successfully completed a course in the application of the seven HACCP principles to meat and poultry product processing, including a segment on the development of a HACCP plan for a specific product. Only those individuals who meet the training requirements may perform the following functions:

- Development of the HACCP plan as required by § 417.2(b);
- Reassessment and modification of the HACCP plan as required by § 417.3 and/or § 417.4(a)(3).

The rule has been modified to set a basic standard for HACCP training while preserving the flexibility needed by industry to implement HACCP systems effectively. The provisions of § 417.7 are consistent with FSIS's view that training is central to the success of HACCP, that there are many avenues for HACCP training needs, and that responsible establishment officials are in the best position to determine the training needs for each establishment.

Adequacy of HACCP Plans

The proposed rule stated that a HACCP plan could be found invalid if it does not meet the regulatory requirements, if HACCP records are not being maintained to validate the plan or verify process control under the plan, or if a processing failure results in production of adulterated product.

The provisions of the final rule relating to the criteria for finding a HACCP plan inadequate are essentially the same as in the proposal, except that the term ''invalid'' has been replaced with ''inadequate'' for clarity. Also, the final rule states that a HACCP plan may be found to be inadequate if establishment personnel are not performing tasks specified in the HACCP plan. One change from the proposal concerns the correction of HACCP systems found inadequate because of product adulteration. Under the proposed §§ 326.7(c)(3)(ii) and 381.607(c)(3)(ii), the establishment would have been required to submit to FSIS, among other things, a written plan for chemical or microbiological testing by an external laboratory of finished product produced under the modified HACCP plan to show that the modified plan corrected the problem. The final rule is more flexible because decisions regarding the appropriateness of the HACCP system modifications are made by the establishment.

FSIS will verify that HACCP plans are adequate. The procedure for determining the adequacy of the HACCP plan will not be a one-step process. Instead, FSIS will take a variety of actions including reviewing the HACCP plan and associated records, directly observing the HACCP system in operation, and assessing the adequacy of corrective actions. After a thorough review is conducted, FSIS will determine whether a HACCP plan is adequate. If a plan is found to be inadequate, FSIS will take appropriate regulatory action.

III. Sanitation Standard Operating Procedures

The Proposed Rule

FSIS proposed that all meat and poultry establishments be required to develop, maintain, and adhere to written sanitation standard operating procedures (Sanitation SOP's). The proposal was based on FSIS's belief that effective establishment sanitation is essential for food safety and to successful implementation of HACCP. Insanitary facilities or equipment, poor food handling practices, improper personal hygiene, and similar insanitary practices create an environment conducive to contamination of products. There are direct and substantial links between inadequate sanitation and the contamination of meat and poultry products by pathogenic bacteria. FSIS tentatively concluded that Sanitation SOP's were necessary because they would clearly define each establishment's responsibility to consistently follow effective sanitation procedures and would substantially minimize the risk of direct product contamination and adulteration.

FSIS also had determined that Sanitation SOP's would improve the utilization of FSIS Inspection Program resources by refocusing FSIS sanitation inspection on the oversight of establishment prevention and correction of conditions that cause direct product contamination or adulteration. After Sanitation SOP's were in place, Agency inspection personnel would spend less time enforcing detailed sanitation requirements and directing the correction of problems after they occur. Instead, FSIS inspectors would focus on oversight of an establishment's implementation of Sanitation SOP's and on taking appropriate regulatory action when an establishment's Sanitation SOP's were not properly executed or when product contamination or adulteration was imminent, directly observed, or probably had occurred.

The concepts underlying the proposed requirements for Sanitation SOP's are important and new. In the past, FSIS has not clearly articulated the responsibility every establishment has to ensure that sanitation requirements are met every day, both before and during operations. Although the majority of meat and poultry establishments maintain adequate sanitary conditions, some establishments have significant sanitation problems that can be resolved only through more clearly defining establishment responsibility and accountability for the daily observance of sound sanitation practices.

The proposed requirements for Sanitation SOP's were the result of many years of observations by FSIS of establishment sanitation and management practices. The persistence of insanitary conditions within some meat and poultry establishments was documented in the ''1,000 Plant Review,'' conducted by FSIS between September 1993 and February 1995. This project involved unannounced visits to 1,014 inspected establishments during which operations were observed and deficiencies noted. More than 60 percent of all deficiencies documented by the review involved establishment sanitation. The distribution of sanitation problems was not, however, uniform in the establishments sampled. Fewer than half those establishments visited accounted for 90 percent of the sanitation deficiencies. Data collected through FSIS's Performance Based Inspection System similarly documents that sanitation is the most frequent deficiency noted by inspection personnel in routine establishment visits.

Through analysis of this information, FSIS determined that the difference between establishments with consistently sanitary conditions and those with chronic sanitation deficiencies is often that the better performing establishments have effective quality control and sanitation programs, including written Sanitation SOP's, while the marginal establishments do not. As a means of bringing all establishments to a consistently acceptable level of sanitation, as well as to clarify the respective roles of establishments and FSIS in achieving that goal in each establishment, FSIS proposed that every meat and poultry establishment develop, maintain, and adhere to written Sanitation SOP's.

FSIS proposed that Sanitation SOP's cover the daily preoperational and operational sanitation procedures that the establishment would implement to prevent direct product contamination or adulteration. Additionally, establishments would be required to identify the establishment officials who would monitor daily sanitation activities, evaluate whether the Sanitation SOP's are effective, and take appropriate corrective action when needed. Also, each establishment would be required to make daily records showing completion of the procedures in the Sanitation SOP's, any deviations and corrective actions taken, and maintain those records for a minimum of six months. Further, an establishment's Sanitation SOP's and records were to be made available to FSIS for verification and monitoring. Finally, the proposal provided that any equipment, utensil, room or compartment found by an inspection program official to be not in compliance with the Sanitation SOP's or insanitary would be tagged ''U.S. Rejected,'' and could not be used until it had been reinspected and passed.

FSIS solicited comments on the proposed regulatory requirements for Sanitation SOP's. FSIS also requested comments on how Sanitation SOP's should clarify the responsibilities of establishments and what role inspection personnel should play in authorizing daily startup of operations. Comments also were requested on whether certain Good Manufacturing Practices (GMP's) or other sanitation practices should be mandatory elements of the Sanitation SOP's.

The majority of the comments addressing the proposed Sanitation SOP's provisions expressed support. Many commenters, however, expressed concern about the lack of detail in the proposal regarding the required contents of an establishment's Sanitation SOP's and about how Sanitation SOP's would be enforced by inspectors. The comments, both written and oral, and FSIS's responses are discussed in the ''Comments'' section, which follows the description of the final rule.

The Final Rule

After careful consideration of the comments, FSIS is promulgating requirements for Sanitation SOP's, essentially the same as proposed, though with several changes and additions for both clarity and to grant establishments greater flexibility in meeting the Sanitation SOP's requirements.

As proposed, all inspected establishments shall develop, implement, and maintain written Sanitation SOP's. The Sanitation SOP's shall describe all procedures and establishment conducts daily to prevent direct contamination or adulteration of product(s). FSIS has clarified that Sanitation SOP's also shall specify the frequency with which each procedure in the Sanitation SOP's is to be conducted and identify the establishment employee(s) responsible for the implementation and maintenance of such procedure(s). While the employee responsible for implementation and maintenance of procedures in the Sanitation SOP's may be the employee who actually performs such activities, he or she instead may be the employee in charge of ensuring that the sanitation procedures are carried out. All that is required is that the Sanitation SOP's identify the employee(s) responsible for implementation and maintenance of the procedures in the Sanitation SOP's. The establishment does not need to necessarily identify the employee(s) who will actually perform the sanitation procedures. Also, an establishment's Sanitation SOP's may have more than one employee responsible for implementation and maintenance of sanitation procedures. For example, one employee may be responsible for pre-operational procedures and another may be responsible for operational procedures. The rule provides such flexibility.

Further, FSIS is clarifying in this final rule that establishments must explicitly identify pre-operational sanitation procedures in their written Sanitation SOP's, distinguishing them from sanitation activities to be carried out during operations. This will assist both the establishment and FSIS in identifying which sanitation procedures are to be carried out each day prior to start-up of operations.

FSIS is also requiring that Sanitation SOP's be signed and dated by ''the individual with overall authority on-site or a higher level official of the establishment,'' and that the signature shall signify that the establishment will implement the Sanitation SOP's. This new language grants establishments greater flexibility than did the proposed requirement that ''the establishment owner or operator'' be responsible for implementation of Sanitation SOP's. Additionally, this final rule specifies that Sanitation SOP's must be signed upon initiation and upon any modification.

As in the proposal, the format and content of Sanitation SOP's are not specified in the final regulations. Because there are many types of inspected establishments that will achieve the required sanitary conditions in different ways, this rule gives establishments flexibility to customize their sanitation plans. Each meat and poultry establishment must analyze its own operations and identify possible sources of direct contamination that must be addressed in its Sanitation SOP's.

As proposed, each establishment is required to conduct the pre-operational and operational procedures as specified in the Sanitation SOP's, monitor the conduct of the procedures, and routinely evaluate the content and effectiveness of the SOP's and modify the Sanitation SOP's accordingly. The Sanitation SOP's must be kept current. The establishment must evaluate and modify Sanitation SOP's as needed in light of changes to establishment facilities, personnel, or operations to ensure they remain effective in preventing direct product contamination and adulteration. As upon initial implementation, Sanitation SOP's must be dated and signed by the individual with overall authority on-site or a higher level official of the establishment following any modification.

Also as in the proposal, FSIS is requiring that each establishment initiate corrective action when either the establishment or FSIS determines that Sanitation SOP's or their implementation may have failed to prevent direct product contamination or adulteration. The requirements regarding corrective actions have been more thoroughly explained, however, and now specify that corrective actions shall include ''procedures to ensure appropriate disposition of product(s) that may be contaminated, restore sanitary conditions, and prevent the recurrence of direct contamination or adulteration of product(s), including

appropriate reevaluation and modification of the Sanitation SOP's and the procedures specified therein.''

This final rule also adopts the provision in the proposal requiring establishments to keep daily records documenting that sanitation and monitoring procedures listed in the Sanitation SOP's are performed. Establishments also must maintain records documenting any corrective actions taken to prevent direct contamination or adulteration of products, or when the establishment determines or FSIS notifies the establishment that its Sanitation SOP's are inadequate. FSIS has clarified that such records must be initialed and dated by the designated establishment employee(s) responsible for the implementation and monitoring of the Sanitation SOP's procedures.

In response to comments, FSIS has revised the recordkeeping requirements to allow for computer maintenance of records, as long as establishments implement controls to ensure the integrity of the electronic data. FSIS recognizes that many establishments currently use computers for maintaining a variety of types of information, including sanitation data. It would be impractical and burdensome to prohibit these establishments, or others wishing to use computers, from using computers to record and store required sanitation data.

FSIS proposed that establishments must maintain sanitation records for a minimum of six months, but did not specify whether these records had to be stored on-site. Several commenters expressed concern about the physical location of establishment sanitation records and questioned whether sanitation records must be maintained in the establishment.

FSIS requires unimpeded access to all establishment sanitation records for oversight and enforcement purposes; these records are to be an integral part of the Agency's inspection activities. FSIS anticipates that, for most establishments, these records will not be voluminous and will not create a significant storage problem. However, the Agency recognizes that space may be limited at certain inspected facilities and has revised this requirement to allow establishments to retain records off-site, provided they are not removed from the establishment for at least 48 hours following completion and they can be provided to FSIS personnel within 24 hours of being requested.

In this final rule, FSIS is clarifying that it will verify that the Sanitation SOP's are being implemented and maintained, and that they are effective. FSIS inspectors will ensure not only that an establishment is complying with the requirement to develop, implement, and maintain Sanitation SOP's, and to maintain daily records for them, but also that the Sanitation SOP's are in fact working. Inspectors will review the Sanitation SOP's, the daily records, the conduct of procedures specified in the Sanitation SOP's, and the sanitary conditions themselves.

The failure by an establishment to comply with the Sanitation SOP's regulations may initiate regulatory action. The full array of compliance tools includes process deficiency reports, tagging of equipment or areas, retention of product, letters of warning, and suspension and withdrawal of inspection. The nature of FSIS's response will depend on the circumstances. Minor omissions or errors in Sanitation SOP's documentation, not symptomatic of larger ''system'' problems, will result in regulatory action commensurate with the severity of the violation. For example, process deficiency reports might be issued to direct corrective action. However, a pattern of violations of the Sanitation SOP's provisions would lead to additional responses, with persistent and serious failures resulting in suspension or withdrawal of inspection from the establishment. Suspensions and withdrawals would be made in accordance with applicable rules of practice for those proceedings.

If FSIS determines that an establishment's Sanitation SOP's fail to include procedures to prevent direct product contamination or adulteration or that required records are not being kept, the Agency may tag affected facilities and equipment and suspend inspection until the failure is remedied. Because the tagging of insanitary facilities and equipment is based on current statutory authority, the specific regulatory provisions for tagging in the proposal are not retained in this final rule.

Verification and compliance activities under the Sanitation SOP's provisions are distinguishable from actions taken as a consequence of a finding of product adulteration under the sanitation requirements elsewhere in the regulations. As a practical matter, however, such findings are likely to be connected. A finding of deficient Sanitation SOP's or Sanitation SOP's records may prompt additional inspection activity directed at determining whether or not product contamination or adulteration has occurred. If it has, FSIS will take appropriate action to prevent adulterated product from entering commerce and, where necessary, seek recall of product that has already entered commerce.

Finally, the Sanitation SOP's requirements of this final rule are set out in a new Part 416, Sanitation. These provisions are formatted differently from the proposal to comport with FSIS's announced project to reform, reorganize, and recodify the meat and poultry regulations. This regulatory reform project is well underway, and will, among other things, eliminate unneeded regulations by combining, to the extent possible, the currently separate meat and poultry regulations. New Part 416, like new part 417 on HACCP, covers both meat and poultry products. Part 416 will be expanded and supplemented as the Agency proceeds with its initiative to review, reform, and reorganize existing FSIS regulations concerning sanitation.

Comments and Responses

General

Support for the proposed requirements for Sanitation SOP's was expressed by a wide range of commenters. Most supporters agreed that establishment sanitation is essential to product safety and that every meat and poultry establishment should be required to have a written sanitation plan. Those who opposed mandatory Sanitation SOP's argued that current sanitation regulations would be adequate if they were better enforced, that Sanitation SOP's would be no more than a paperwork exercise, and that they would be an additional burden on establishments. FSIS strongly disagrees with the notion that Sanitation SOP's will be a mere ''paperwork exercise,'' and believes this regulation will, in fact, result in improved sanitation and provide for more effective enforcement of the sanitation requirements.

Substantial evidence exists that insanitary facilities or equipment, poor food handling, improper personal hygiene, and similar insanitary conditions create an environment in which products become contaminated with microorganisms, including pathogens. While sanitation has improved greatly throughout the industry over the years, some individual establishments still have difficulty getting their facilities and equipment ready to start operations each day and keeping conditions sanitary during establishment operations. FSIS affirms that proper sanitation is an important and integral part of every food process and a fundamental requirement of the inspection laws that the Agency enforces.

In the past, FSIS has enforced the sanitation requirements primarily through a combination of prescriptive sanitation regulations, detailed guidance materials, and direct, hands-on involvement by inspectors in day-to-day pre-operational and operational sanitation procedures in inspected establishments. This system achieved sanitation goals on a daily basis in individual establishments, but at a relatively large public cost because it encouraged establishments to shift accountability for sanitation to the FSIS inspector. For example, in the past, FSIS inspectors have taken responsibility for checking sanitation in every slaughter establishment before it begins daily processing. In extreme cases, inspectors have led daily ''bucket brigades'' of slaughter establishment employees through pre-operational establishment cleanup. In these circumstances, FSIS has, in effect, taken responsibility for establishment sanitation conditions. The Sanitation SOP's requirement is intended to end this practice. Sanitation SOP's make it clear that responsibility for identifying and conducting procedures needed to maintain sanitary conditions rests with the establishment, not with FSIS.

Sanitation SOP's are an inspection tool. They will help individual inspectors focus their oversight in an establishment on those conditions that pose a risk of direct product contamination or adulteration, that is, on conditions which pose the greatest adulteration hazards to products subject to inspection in that establishment. The effectiveness of each establishment's Sanitation SOP's in achieving acceptable sanitation will be subject to continuing verification by FSIS inspectors through direct observation of conditions in the establishment. It is expected that, over time, inspectors in most establishments will increasingly be able to rely on a review of daily Sanitation SOP's records to determine whether establishments are complying with sanitation requirements. However, FSIS inspectors will continue to have a full array of regulatory tools to ensure the maintenance of sanitary conditions. For instance, FSIS inspectors will continue tagging equipment, utensils, rooms, or compartments in instances where there is physical evidence of insanitary conditions in the production areas of the establishment.

FSIS anticipates that the development, implementation, and maintenance of Sanitation SOP's, as well as the recordkeeping provisions, will impose a minimal burden on establishments. Some establishments already utilize written Sanitation SOP's. For other establishments, compliance with the Sanitation SOP's requirements will consist of recording their current sanitation practices. A complete discussion of the anticipated costs of implementing the SOP's requirements is contained in the Final Regulatory Impact Analysis.

Sanitation SOP's are an integral part of the Agency's strategy for making inspection more effective and more risk-based in its focus. For these reasons, FSIS is adopting the proposed requirements for Sanitation SOP's and is clarifying that developing, implementing, and maintaining Sanitation SOP's and keeping daily Sanitation SOP's records, is a condition of inspection.

Development of Sanitation SOP's

As noted previously, a number of commenters raised concerns about the content of the Sanitation SOP's and asked for more specificity. Some commenters recommended that FSIS be more specific about what procedures must be in the Sanitation SOP's. Other commenters suggested that such procedures be fully described and be made mandatory. The Agency recognizes these commenters' concerns and therefore is providing guidance on how individual establishments may develop their Sanitation SOP's in Appendix A and Appendix B to this final rule. Appendix A is a guideline on Sanitation SOP's that establishments can use in developing their own Sanitation SOP's; Appendix B is a model of an establishment's Sanitation SOP's that demonstrates what a completed Sanitation SOP's might include. Together, these guidance documents will assist establishments to develop Sanitation SOP's that address conditions unique to individual establishments and processes and that prevent direct product contamination or adulteration. As with all FSIS guidance materials, the Agency welcomes comments on how these two documents might be improved.

However, the final rule itself remains nonprescriptive in that it requires each establishment to determine for itself what procedures are necessary to prevent insanitary conditions that will cause direct product contamination or adulteration. Overall, the comments confirmed that, while proper sanitation is a common need in every food production facility, the means to achieve it are diverse and establishment-specific. Establishments that now have good sanitation and effective process controls are expected to continue using techniques that work in their establishment. Other establishments will need to analyze and select effective abatement procedures among various alternatives for attaining a sanitary processing environment. What works in one establishment may or may not work in another.

The proposed rule also solicited comments as to whether FSIS should mandate Good Manufacturing Practices (GMP's) for all or certain Sanitation SOP's. FSIS listed illustrations in the proposal of elements that might be mandatory elements of Sanitation SOP's. Although some commenters expressed support for making GMP's or other practices mandatory, many objected to such specific requirements on the basis that they would be infeasible. FSIS agrees with those commenters who stated that detailed GMP regulations are infeasible because of the difficulty in making them specific enough to be useful. FSIS also was concerned that such specificity could result in lost flexibility.

For these reasons, this final rule will not prescribe a single format for individual establishment Sanitation SOP's or mandate specific GMP's. It will be the responsibility of each establishment to consider existing FSIS regulations and guidelines; evaluate its facilities, processes, and sanitation conditions; determine what sanitation procedures must be implemented to prevent direct product contamination or adulteration; and describe these procedures in Sanitation SOP's.

Maintaining Sanitation SOP's

FSIS received several comments regarding the maintenance of Sanitation SOP's. Some commenters wanted to know whether if an establishment will be able to update its Sanitation SOP's to incorporate new technologies. Other commenters wanted to know what type of system, if any, FSIS will use to review changes to Sanitation SOP's and if a formal request for FSIS review or approval would be required.

As has been discussed previously, the final rule requires that each establishment develop, implement, and maintain its Sanitation SOP's and incorporate new sanitation technologies as appropriate. FSIS encourages the adoption of new technologies that can improve sanitation and food safety. This is an establishment responsibility. Although FSIS will not approve Sanitation SOP's, it will provide advice and guidance to establishments as they develop and begin to implement Sanitation SOP's.

Recordkeeping

Commenters also expressed concerns about what was to be in daily sanitation

records and how long and where such records were to be retained. As the proposal explained, and this final rule requires, Sanitation SOP's records must document the implementation and maintenance of Sanitation SOP's, as well as any deviations from Sanitation SOP's procedures, and corrective actions taken. As with the development of Sanitation SOP's themselves, FSIS will allow each establishment to determine the form and format of its daily sanitation records. In many establishments, a simple, daily checklist, showing that specific Sanitation SOP's procedures were implemented, initialed by the responsible establishment employee, is likely to suffice. Other establishments may find a more detailed format for its records is more useful. Some establishments may wish to use a computer-based system. This final rule provides such flexibility.

Some commenters stated that the proposed six-month retention of daily sanitation records was too long. FSIS disagrees and is adopting the proposed requirement that establishments retain Sanitation SOP's records for six months. Increased product shelf-life and the potential need for FSIS personnel to review Sanitation SOP's records many months after production make it necessary that establishments retain records for six months. Furthermore, sanitation records provide both FSIS and establishment management near-term trend data to evaluate how establishment sanitation is being carried out under the Sanitation SOP's. This feedback should be very useful to establishments in determining whether and how their Sanitation SOP's need revision. Inspectors will benefit, too, from knowing how the establishment has complied with these requirements. Establishment sanitation records will also need to be reviewed by the Agency as part of any compliance investigation.

In a related matter, several commenters expressed concern about the physical location of establishment sanitation records and questioned whether sanitation records must be maintained in the establishment. As explained above, FSIS requires unimpeded access to all establishment sanitation records for oversight and enforcement purposes. FSIS anticipates that, for most establishments, these records will not be voluminous and will not create a significant storage problem. However, in response to these comments, this final rule will allow establishments to retain Sanitation SOP's records off-site provided they are not removed from the establishment for at least 48 hours following completion and they can be provided to FSIS personnel within 24 hours of request.

Some commenters also expressed concern about public accessibility to an establishment's Sanitation SOP's records. Like establishment HACCP records, these records are kept and maintained by the establishment and generally are not Agency records. Occasionally, however, such records will be copied and incorporated into Agency records for some official purpose. These records will be disclosed to third parties only to the extent disclosure is required by the Freedom of Information Act and the Privacy Act or other applicable law. Proprietary information, personal information, and other information exempt from disclosure would be protected.

''Layering''

Many commenters were concerned that FSIS was layering requirements for Sanitation SOP's over existing regulations governing establishment sanitation practices, thereby increasing rather than decreasing intrusive, command-and-control oversight of all inspected establishments. Concern was also expressed that the new requirements might conflict with current sanitation regulations.

FSIS does not consider the Sanitation SOP's requirement to be layered over or in conflict with existing regulations. Existing regulations establish substantive sanitation-related requirements, while the new Sanitation SOP's provisions establish a means by which establishments will take responsibility for achieving sanitary conditions and preventing direct product contamination or adulteration. Sanitation SOP's also will better focus inspection oversight by FSIS inspectors on those sanitation measures required to prevent direct product contamination or adulteration. As discussed, one of the Agency's goals is to reduce inspectors' personal involvement in the conduct of routine, day-to-day sanitation procedures.

FSIS emphasizes that it does not intend or require that an establishment's Sanitation SOP's incorporate all elements of the existing FSIS sanitation regulations. These regulations contain many detailed provisions that do not relate to the prevention of direct product contamination. As the text of the Sanitation SOP's regulations and the guidance materials at Appendices A and B makes clear, FSIS intends and requires only that the Sanitation SOP contain a description of the procedures an establishment will follow to address the elements of pre-operational and operational sanitation that relate to the prevention of direct product contamination.

For example, under paragraph (a) of § 308.4 of the regulations, FSIS requires that ''Dressing rooms, toilet rooms, and urinals shall be sufficient in number, ample in size, and conveniently located.'' Although compliance with this requirement is important for the maintenance of establishment sanitation, and employee hygiene must be part of Sanitation SOP's, § 308.4(a) does not concern direct product contamination and would not need to be addressed in an establishment's Sanitation SOP's. On the other hand, the rule requires that Sanitation SOP's specifically address the pre-operational ''cleaning of food contact surfaces of facilities, equipment, and utensils'' because these procedures are necessary to prevent the direct contamination of product. Additionally, the guidance materials in Appendices A and B give examples of other procedures necessary to prevent direct product contamination that Sanitation SOP's should include, such as ''Descriptions of equipment disassembly, reassembly after cleaning, use of acceptable chemicals according to label directions, and cleaning techniques.'' FSIS emphasizes, however, that an establishment does not need to reproduce in its written Sanitation SOP's the existing regulatory requirements concerning the prevention of direct contamination or adulteration of product.

FSIS also realizes that its existing sanitation regulations contain some detailed and prescriptive provisions and that some of those regulations may be outmoded and no longer needed in light of the Agency's effort to clarify that good sanitation is the responsibility of each establishment. FSIS will continue to review, reevaluate, and revise, as necessary, all current sanitation regulations, along with related issuances and sanitation inspection procedures, to simplify and streamline them and make them more compatible with Sanitation SOP's requirements. This process was announced and initiated in the advance notice of proposed rulemaking published on December 29, 1995 (60 FR 67469). The review of sanitation regulations is a high priority for the Agency. The elements of sanitation that are required to be addressed in the Sanitation SOP's will remain as central elements of the FSIS sanitation regulations. Establishments will not need to revise their Sanitation SOP's because of the simplification and streamlining of existing FSIS sanitation regulations.

Role of Inspectors

A related concern of many commenters was the role FSIS inspectors will play in the development and enforcement of Sanitation SOP's. Some commenters expressed concern that during inspection inspectors would rely solely on record reviews instead of actually observing establishment conditions. Other commenters expressed concerns that Sanitation SOP's would merely provide FSIS inspectors with more latitude to make intrusive and arbitrary decisions.

FSIS strongly disagrees with this characterization of Sanitation SOP's and the role of the Agency's inspection personnel. Industry's responsibility for producing safe meat and poultry and FSIS's responsibility for regulatory oversight are fundamentally different. Sanitation SOP's are the establishment's commitment to FSIS that they will consistently provide a sanitary environment for food production. FSIS inspectors will not be tasked with directing an establishment's sanitation procedures, nor with ''approving'' the establishment's Sanitation SOP's. They will, however, verify that the Sanitation SOP's are being implemented and that they are effective in preventing direct product contamination and adulteration.

Oversight of Sanitation SOP's will become an increasingly important part of daily inspection activity, while the directing of sanitation activities will occur less frequently. Periodic inspection tasks will include verifying that Sanitation SOP's meet the regulation's requirements, are being implemented and maintained, and are effective in producing sanitary conditions. FSIS inspectors' oversight will include review of the Sanitation SOP's and required records, direct observation of the implementation and monitoring of the Sanitation SOP's, and visual observation of sanitary conditions in the production areas of the establishment.

FSIS expects that establishments will rely less on inspectors to direct them in maintaining sanitary conditions as establishments rely more on adherence to their own Sanitation SOP's. The mix of inspector tasks that comprise sanitation inspection also will change. As establishments adopt and successfully implement Sanitation SOP's, and consistently achieve good sanitation results, FSIS inspectors can spend less time ensuring that basic sanitation requirements are being met. Conversely, to the extent some establishments do not implement effective Sanitation SOP's and consistently achieve good sanitation, FSIS inspectors will be obliged to intensify their focus on actual establishment conditions and initiate appropriate enforcement actions.

Ensuring establishments operate under sanitary conditions should be made easier for inspectors, and ultimately permit inspectors to spend more time on other tasks. One purpose of the Sanitation SOP's regulations is to help inspectors, as well as establishments, focus their attention on those aspects of establishment sanitation that pose the most risk of causing product contamination or adulteration. Under the current inspection system, inspectors look at all aspects of establishment sanitation, including many that have a relatively low probability of causing product contamination. In the future, normal oversight activities will focus more on whether an establishment is following its Sanitation SOP's and thereby consistently preventing, or as appropriate, correcting, conditions that cause direct product contamination or adulteration. Some commenters were concerned about the effect on establishment operations if inspection personnel, when enforcing the Sanitation SOP's requirements, reject one piece of equipment, utensil, room or compartment as insanitary. As previously stated, inspectors will take prompt action in cases where there is a finding of insanitation or the likelihood of product contamination or adulteration. The type and intensity of this response will vary. For example, establishment operations may be allowed to continue if inspection personnel determine that a rejected item, compartment or room is not related to other processes or products being produced. However, inspection would be withheld in rooms, departments, or facilities associated with the production of contaminated or adulterated products where the establishment can not show FSIS that they have isolated the cause of the contamination or adulteration and have taken appropriate action to prevent further contamination or adulteration. In a similar vein, commenters also stated that establishments should not be penalized for the occurrence of a sanitation problem that is effectively abated. These commenters suggested that ''U.S. Rejected'' tags should be used only if an establishment fails to identify and correct insanitary conditions. If the establishment takes proper corrective action, they argued, it should be viewed as evidence that the Sanitation SOP's is being adequately implemented. FSIS agrees. Establishments that identify and correct insanitary conditions in a timely manner and make proper disposition of any affected product will be considered to be in compliance with the Sanitation SOP's regulations.

Although FSIS fully expects that the clarification of establishments' sanitation responsibilities will lead to better and more consistent compliance with sanitation requirements, the Agency recognizes that this will not be the case in all establishments. Establishments that fail to comply with the requirements in this final rule for Sanitation SOP's will be subject to appropriate compliance and regulatory action that will, when necessary, include suspension or withdrawal of inspection. Further, as noted in the proposal, anyone who intentionally falsifies records will be subject to criminal prosecution.

FSIS also recognizes commenters' concerns about its rules of practice and due process procedures. FSIS expects that these concerns will be addressed through changes to these procedural requirements initiated as a result of the Agency's regulatory reform project. These subjects are also on the agenda for discussion at FSIS's upcoming implementation conferences.

Relation to HACCP

Another important topic raised by commenters was the link between an establishment's Sanitation SOP's and its HACCP plan. This link was unclear to some who stated the two were redundant. HACCP plans aim at ensuring safety at specific critical control points within specific processes, while Sanitation SOP's typically transcend specific processes. Sanitation SOP's are important tools for meeting existing statutory sanitation responsibilities and preventing direct product contamination or adulteration. As such, it is appropriate that they be developed and implemented in the near-term prior to implementation of HACCP. In a sense, the Sanitation SOP's are a prerequisite for HACCP. It is anticipated that some procedures addressed in an establishment's Sanitation SOP's might eventually be incorporated into an establishment's HACCP plan. Other procedures in an establishment's Sanitation SOP's, including those addressing pre-operational sanitation procedures for cleaning facilities, equipment, and utensils, will most likely remain in the Sanitation SOP's. A sanitation procedure that is incorporated into a validated HACCP plan need not be duplicated in the Sanitation SOP's.

Training

A number of comments expressed concern about the content of inspector training, suggesting that inadequate training would result in inconsistent enforcement of the rule. Assurance was requested that inspectors would be trained to consistently monitor Sanitation SOP's. FSIS recognizes that inspectors must be trained to react as regulators rather than as quality control consultants or establishment sanitarians when a sanitation or other health and safety problem is discovered in an establishment. A primary focus of agency training sessions will be to attain this goal.

Also, some commenters asked whether joint FSIS and industry training would be offered. FSIS does not plan to allow industry to attend Agency training sessions. However, FSIS does plan to hold informational briefings for industry personnel. These will be the subject of future notices in the Federal Register.

Pre-Operation Sanitation Inspection

Some commenters asserted that establishments with good Sanitation SOP's should be permitted to start daily operations on their own, instead of having to wait for an inspector to conduct a pre-operational sanitation inspection and allow operations to start. FSIS agrees with these commenters. Accordingly, upon the effective date of this rule and implementation of Sanitation SOP's, establishments not otherwise notified by FSIS may begin daily processing upon completion of pre-operational sanitation activities without the prior approval of an inspector.

Extending the implementation date for Sanitation SOP's will also give FSIS additional time to provide needed training, instruction and management support to FSIS inspection personnel tasked with enforcing the Sanitation SOP's requirements.

Implementation Date

Finally, many commenters expressed concern about the amount of time they said it would take to prepare and implement effective Sanitation SOP's. These commenters requested more lead time to implement these requirements. FSIS agrees that some establishments may need more time than the 90 days the proposed rule provided for implementing Sanitation SOP's requirements. Consequently, FSIS is modifying this aspect of the proposal. This final rule will provide establishments six months from the effective date of this regulation to develop and implement written Sanitation SOP's. This additional time will allow these establishments to initially develop and refine their Sanitation SOP's to best meet operational needs before the effective date of the Sanitation SOP's requirements. Extending the implementation date for Sanitation SOP's will also give FSIS additional time to provide needed training, instruction, and management support to personnel tasked with enforcing the Sanitation requirements.

IV. Microbiological Performance Criteria and Standards

Summary of Proposal

As part of the Pathogen Reduction/HACCP proposal, FSIS proposed interim targets for the reduction of *Salmonella* for the major species and for ground meat and poultry. Further, FSIS proposed to require daily testing by slaughter establishments and establishments producing raw ground product in order to verify achievement of the *Salmonella* targets on an ongoing basis. The proposal reflected a central tenet of the FSIS food safety strategy: to be effective in improving food safety and reducing the risk of foodborne illness, HACCP-based process control must be combined with objective means of verifying that meat and poultry establishments are achieving acceptable levels of food safety performance.

FSIS explained in the preamble to the proposal that food safety performance standards, in the form of tolerances or other limits, have been an important feature of the food safety regulatory system for chemical residues (such as those resulting from the use of animal drugs and pesticides) and for pathogenic microorganisms in ready-to-eat meat and poultry products (such as *Listeria monocytogenes* in ready-to-eat products and *Salmonella* in cooked beef). However, performance standards have not in the past been incorporated into the regulatory system for pathogens on raw meat and poultry products.

FSIS recognizes that establishing performance standards for pathogens on raw products raises different and difficult issues. The microbiological safety of a meat or poultry product at the point of final sale or consumption is affected by many factors. Most significantly, unlike other kinds of contaminants, microbiological pathogens can be introduced at many points on the farm-to-table continuum, and once in the product, under certain conditions, the bacteria can multiply. Some pathogens, such as *E. coli* O157:H7, are so virulent that a small number of organisms can pose a significant hazard. Indeed, on that basis the Agency has determined that any amount of *E. coli* O157:H7 will adulterate a meat or poultry product. On the other hand, some pathogens, such as *Salmonella*, ordinarily must multiply to relatively large numbers to cause illness, although the susceptibility of individuals to illness varies widely. Certain segments of the population, such as the very young, the elderly, and persons with compromised immune systems, are particularly vulnerable to illnesses caused by *Salmonella* and other foodborne pathogens.

Therefore, FSIS has not taken the position in this rulemaking that some amount of a pathogen necessarily renders a raw meat or poultry product unsafe and legally adulterated; the proposed targets for pathogen reduction would not have served as a standard for determining whether any particular lot of raw product could be released into commerce. The proposed targets were intended instead as an initial step toward defining levels of food safety performance that establishments would be required to achieve consistently over time. The interim targets and the required testing by establishments were also intended as a first step toward the eventual incorporation of microbial testing as an integral part of process-control validation and verification in facilities operating under HACCP.

Salmonella was selected as the target organism because it is the most common cause of foodborne illness associated with meat and poultry products. It is present to varying degrees in all major species. And, interventions targeted at reducing *Salmonella* may be beneficial in reducing contamination by other enteric pathogens.

As interim targets for pathogen reduction, FSIS proposed that the prevalence of *Salmonella* contamination in each of the major species and in raw ground products be reduced by each establishment to a level below the current national baseline prevalence as measured by the FSIS Nationwide Microbiological Baseline Data Collection Programs and Nationwide Microbiological surveys (collectively referred to below as the FSIS baseline surveys) or other available data.

Role of Microbiological Performance Criteria and Standards in FSIS Food Safety Strategy

As explained in the ''*Background*'' section of this preamble, the most important objective of this rulemaking is to build into food production processes and the FSIS system of regulation and oversight, effective measures to reduce and control pathogenic microorganisms

on raw meat and poultry products. FSIS has concluded that HACCP-based process control combined with appropriate microbiological performance criteria and standards will achieve this objective.

Because the current regulatory system lacks any performance criteria or standards for harmful bacteria on raw products (other than with respect to *E. coli* O157:H7 on raw ground beef), FSIS inspectors have no adequate basis for judging whether establishments producing raw meat and poultry products are dealing effectively with the food safety hazard posed by harmful bacteria.

The HACCP requirements discussed in the preceding section of this preamble will ensure that all meat and poultry establishments implement science-based process controls designed to prevent and reduce the significant food safety hazards that arise in their particular production processes and products. For slaughter establishments and other establishments producing raw meat and poultry products, this will mean developing controls that address the hazards posed by pathogenic microorganisms as well as other biological, chemical and physical hazards. HACCP principles provide the framework by which establishments target and reduce harmful bacteria on raw meat and poultry products.

To be successful in ensuring food safety, however, HACCP must be coupled with appropriate performance criteria and standards against which the effectiveness of the controls developed by each establishment can be validated and verified. For example, controls designed to prevent the contamination of processed, ready-to-eat meat and poultry products with harmful bacteria would have to be validated as effective in meeting the already-existing requirement that such products be free of harmful bacteria. Without such performance criteria and standards, there would be no objective basis for determining whether a particular HACCP plan is adequate for its food safety purpose. Additionally, there would be no way to determine whether industry or FSIS had met their respective food safety responsibilities.

In this rulemaking, FSIS for the first time proposed microbiological performance standards for raw products. The need for some measure of performance in the area of microbiological contamination was generally supported by the comments FSIS received on its proposal. In response to the comments, FSIS has refined and improved its proposed approach, and is establishing microbiological performance standards for reduction of *Salmonella* in raw products, coupled with performance criteria for use with *E. coli* testing to verify the effectiveness of process controls in slaughter establishments.

These new provisions are the first steps in what FSIS expects to be a long-term effort to ensure that appropriate microbial testing is conducted, and appropriate criteria and standards exist, to reduce the food safety hazards posed by harmful bacteria on raw meat and poultry products. The numerical targets for both the performance criteria and the pathogen reduction performance standards are likely to be changed as new data become available. The targets currently are set at the national baseline prevalence of contamination and reflect what is achievable using available technology. FSIS intends to repeat periodically its baseline surveys, on which the criteria and standards are based. FSIS will collect additional data on *Salmonella* by testing products in establishments pursuant to the performance standards and on *E. coli* through close monitoring of establishments' experience and test results associated with that mode of process control verification. These new data, together with relevant epidemiologic data, scientific research, and new technologies, will be considered by FSIS when proposing future revisions to the performance criteria and testing requirements for *E. coli* and the pathogen reduction performance standards for *Salmonella*. New information and data also may support different standards and different approaches to microbial testing.

FSIS is committed to the development and implementation of future performance standards, as needed, to achieve the FSIS's public health goal of reducing the incidence of foodborne illness associated with harmful bacteria on raw meat and poultry products. FSIS is also concerned that standards achieve this public health goal in a manner that encourages industry innovation and minimizes regulatory burdens on the regulated industry. The pathogen reduction performance standards promulgated in this regulation will be implemented on the basis of a statistical evaluation of the prevalence of bacteria in each establishment's products, measured against the nationwide prevalence of the bacteria in the same products. These standards will not be used to judge whether specific lots of product are adulterated under the law. As more research is done and more data become available, and as more sophisticated techniques are developed for quantitative risk assessment for microbiological agents, it may be possible and appropriate to develop performance standards that use a different approach. Consideration may also be given to the possibility of establishing similar standards for other pathogenic microorganisms. FSIS will continue to work with the scientific community in this area.

The microbiological performance standards set out in this rulemaking are part of a fundamental shift in FSIS regulatory philosophy and strategy. The current inspection system relies heavily on intensive ''command-and-control'' prescription of the means by which meat and poultry establishments must achieve statutory objectives concerning food safety, sanitation, product wholesomeness, and prevention of economic adulteration and misbranding. As explained in the ''*Background*'' section of this preamble, in FSIS's ANPR ''FSIS Agenda for Change: Regulatory Review,'' and in the January, 1996, National Performance Review report ''Reinvention of Food Regulations,'' FSIS plans to shift from this reliance on command and control regulations to much greater reliance on performance standards. FSIS believes that public health and consumer protection goals can be achieved more effectively, in most cases, by converting command-and-control regulations to performance standards, which provide industry with the flexibility to devise the optimal means of achieving food safety objectives. FSIS would verify compliance with such performance standards through inspection and other forms of oversight.

Overview of Final Rule

Comments on the proposed rule's microbial testing provisions have resulted in a number of changes to those provisions. As discussed in the ''Response to Comments'' section, below, FSIS received numerous comments supporting the concept of microbiological performance criteria or standards, but also received many comments urging alternatives to the specific approach proposed by FSIS, including testing for organisms other than *Salmonella*.

The Agency actively sought out comment and information on the issue of target organism(s) to be selected for process control verification and pathogen reduction purposes in this regulation. In the proposal, FSIS stated that ''the Agency recognizes that there are other foodborne human pathogens of public health concern that can be isolated from raw meat and poultry product. The Agency would welcome

comments on the targeting of other pathogens in addition to or in lieu of *Salmonella*'' (60 FR 6800). As noted earlier in this preamble, during the comment period FSIS held many meetings to solicit comment on various issues, including microbiological criteria and standards. Microbiological criteria and standards were discussed in detail at the FSIS-sponsored scientific conference held in Philadelphia, Pennsylvania, on May 1 and 2, 1995, titled ''The Role of Microbiological Testing in Verifying Food Safety.'' This conference was open to the public and was announced in the Federal Register on March 24, 1995 (60 FR 15533). An expert panel at that conference endorsed the role of microbiological testing in accordance with appropriate criteria or standards, but suggested that mandatory establishment testing focus on a quantitative assay for generic *E. coli* rather than the proposed qualitative assay for *Salmonella*. The panel stated that a quantitative assay for the more commonly occurring generic *E. coli* is a more effective process control indicator with respect to the prevention of contamination of meat and poultry by feces and associated bacteria.

FSIS also held a series of six issue-focused public meetings in September, 1995. During a preliminary public meeting on August 23, 1995, at which issues were identified and the meeting agenda was established, participants decided that a full day should be devoted to further public discussion of pathogen reduction standards and microbial testing. The agenda for the six meetings appeared in the Federal Register on August 31, 1995 (60 FR 45381). The issues discussed on September 27 included: (1) the scientific and policy basis for establishing targets; (2) whether *Salmonella* is the appropriate organism for some or all species; (3) whether other pathogens would be preferable for some or all animal species; (4) the utility of targets for *E. coli* or other non-pathogenic indicator organisms as a means of controlling and reducing pathogenic microorganisms; (5) the advantages and disadvantages of targets based on the prevalence of detectable contamination vs. targets based on the number of organisms present; and (6) the need for pathogen reduction targets for raw ground products in general and in establishments that both slaughter animals and produce ground product.

At the September 27, 1995, issue-focused meeting, there was additional comment in favor of testing for an organism other than *Salmonella*, such as generic *E. coli*, that has a strong track record in the industry as a good organism to use for process control verification testing. There was, however, continued strong support for raw product testing targeted at pathogens, such as *Salmonella*, and support for pathogen reduction as the primary goal of such testing.

At the meetings, FSIS distributed issue papers on the various issues being addressed, based in large part on comments already received. The issue paper on Pathogen Reduction Performance Standards and Microbial Testing stated that the two most common concerns in the comments received to that date were the proposed selection of *Salmonella* as the indicator organism and the frequency of proposed testing. It stated that although some commenters recommended finalizing *Salmonella* testing, others recommended using *E. coli* instead of or in addition to *Salmonella*. The issue paper stated the Agency's current thinking on the organism to be selected, the need for daily testing at every establishment, and the necessity of testing each species slaughtered and each ground product produced. In the issue paper FSIS stated, among other things, that it was ''seriously considering generic *E. coli* as the process control indicator organism and the adoption of a quantitative *E. coli* standard as a measure of process control with respect to the prevention and reduction of fecal contamination in slaughter plants.'' FSIS also stated that it was considering setting forth pathogen-specific performance standards as a direct measure of accountability for controlling and reducing harmful bacteria in raw meat and poultry products and that *Salmonella* targets might be adopted as performance standards and enforced by FSIS through its own compliance monitoring. The Agency published the issue papers in the Federal Register on October 24, 1995 (60 FR 54450).

Based on the large body of written and oral comments FSIS has received on this issue, the Agency has decided not to use *Salmonella* both as a target for pathogen reduction and as an indicator of process control. FSIS has decided to adopt pathogen reduction performance standards targeting *Salmonella*, as proposed, except that FSIS, not the establishments, will conduct testing for the pathogen to verify compliance. FSIS also has decided to require establishments slaughtering livestock and poultry to conduct routine testing for generic *E. coli* (instead of the proposed use of *Salmonella* tests) as an ongoing, objective process control indicator for fecal contamination, and to establish performance criteria by which results can be evaluated.

Process Control Verification Performance Criteria

Under the FMIA and the PPIA, meat and poultry establishments inspected by FSIS are required to maintain sanitary conditions sufficient to prevent contamination of products with filth and to prevent meat and poultry products from being rendered injurious to health (21 U.S.C. 601(m) and 608 (FMIA); 21 U.S.C. 453 (g) and 456 (PPIA)). A grant of inspection by FSIS is contingent upon an establishment meeting this responsibility. FSIS is authorized by law to issue regulations establishing appropriate sanitation requirements. Meat and poultry products are deemed legally adulterated, whether or not they are shown to be contaminated, if prepared, packed, or held under insanitary conditions whereby they may have become contaminated with filth or may have been rendered injurious to health.

In slaughter establishments, fecal contamination of carcasses is the primary avenue for contamination by pathogens. Pathogens may reside in fecal material and ingesta, both within the gastrointestinal tract and on the exterior surfaces of animals going to slaughter. Therefore, without care being taken in handling and dressing procedures during slaughter and processing, the edible portions of the carcass can become contaminated with bacteria capable of causing illness in humans. Additionally, once introduced into the establishment environment, the organisms may be spread from carcass to carcass.

Because the microbial pathogens associated with fecal contamination are the single most likely source of potential food safety hazard in slaughter establishments, preventing and removing fecal contamination and associated bacteria are vital responsibilities of slaughter establishments. Further, because such contamination is largely preventable, controls to address it will be a critical part of any slaughter establishment's HACCP plan. Most slaughter establishments already have in place procedures designed to prevent and remove visible fecal contamination.

There is general agreement within the scientific community that generic *E. coli* is the best single microbial indicator for fecal contamination. FSIS, therefore, is requiring that establishments slaughtering livestock or poultry begin testing for *E. coli* (*E. coli*, biotype I, nonspecific as to species, hereinafter referred to simply as *E. coli*) at the

frequency and following the procedures described in ''*Process Control Verification; E. coli Performance Criteria and Testing*'' section, below, 6 months after publication of the final rule. FSIS considers the required testing to be essential for meeting current statutory requirements for sanitation and the prevention of adulteration. This testing also will play an integral role in the successful implementation of HACCP in slaughter establishments. In addition, FSIS is establishing process control performance criteria for fecal contamination based on the frequency and levels of contamination of carcasses with *E. coli*.

As explained below, FSIS is establishing performance criteria to reflect the prevalence and levels of contamination of *E. coli* on carcasses produced nationwide, as determined by FSIS baseline surveys. The performance criteria and required testing will provide each slaughter establishment and FSIS with an objective means of verifying that the establishment is achieving this level of performance and maintaining it consistently over time. Test results that show an establishment is meeting or exceeding the criteria provide evidence that the establishment is maintaining adequate process control for fecal contamination.

FSIS is purposely using the term performance ''criteria'' rather than performance ''standard'' in this context because no single set of test results can demonstrate conclusively that adequate process control for fecal contamination is or is not being maintained. As explained below, if test results do not meet the applicable criterion, it raises questions about the adequacy of the process control. FSIS intends to consider the establishment's results and corrective actions, together with other information and inspectional observations, in evaluating whether a problem exists that requires regulatory action or other measures to protect consumers and ensure compliance with the law.

Also, as discussed below, although FSIS is proceeding with the final rule at this time, it is inviting comment on technical aspects of the process control performance criteria and the required testing. FSIS requests that comments on the *E. coli* performance criteria and testing requirement be focused on the technical aspects of the rule, i.e., the manner in which the criteria are articulated, the sampling frequency, and the sampling and testing methodologies.

FSIS intends to update the criteria periodically to ensure that the criteria adequately reflect an appropriate level of performance with respect to prevention and removal of fecal contamination and associated bacteria from livestock and poultry carcasses.

Pathogen Reduction Performance Standards

As proposed, FSIS is adopting pathogen reduction performance standards using *Salmonella* as the target organism. The most significant difference between the proposal and this final rule is that, as explained above, FSIS is not relying on *Salmonella* to be a process control indicator, as well as the target organism for the pathogen reduction performance standard. Establishments will not be required by this final rule to test for *Salmonella*, as had been proposed. Instead, FSIS will obtain samples from slaughter establishments and establishments producing raw ground product or fresh pork sausage and test those samples for *Salmonella* to ensure that the pathogen reduction performance standards are being met.

As proposed, FSIS will require that no establishment can have a prevalence of *Salmonella* contamination, as a percentage of positive samples from carcasses and percentage of positive samples from raw ground product, greater than the baseline prevalence for each raw product as reflected in the FSIS baseline survey for each species or other category of raw product. These targets constitute performance ''standards'' rather than performance ''criteria'' because, following an establishment's implementation of HACCP, FSIS will require that the establishment meet the standard consistently over time as a condition of maintaining inspection.

The *Salmonella* pathogen reduction performance standards are not, however, lot release standards, and the detection of *Salmonella* in a specific lot of raw product will not by itself result in the condemnation of that lot. The performance standards and FSIS's enforcement approach, as discussed below, are intended to ensure that each establishment is consistently achieving an acceptable level of performance with regard to controlling and reducing harmful bacteria on raw meat and poultry products.

FSIS considers systematic reduction of pathogenic microorganisms in raw product to be an essential responsibility of meat and poultry establishments under the current statutes. As a condition of inspection and to avoid the production of product that would be deemed legally adulterated, establishments must utilize available process control methods and technologies as necessary to achieve applicable pathogen reduction standards.

Process Control Verification; E. coli Performance Criteria and Testing

Establishments that slaughter livestock and poultry currently have an obligation to control the slaughter and sanitary dressing process so that contamination with fecal material and other intestinal contents is prevented. This means that establishments must maintain sanitary conditions and use good manufacturing practices to avoid contamination with visible feces and ingesta and associated bacteria. When such visible contamination occurs, establishments are expected to detect it and physically remove it through knife trimming or other approved removal procedures. The present FSIS verification activity to demonstrate that this has been accomplished is organoleptic inspection. FSIS inspectors apply a zero tolerance performance standard for visible feces and ingesta on dressed carcasses. As a practical matter, however, additional measures must be taken if inspectors are to assess the extent to which the invisible bacteria associated with feces and ingesta may be present on the carcass.

FSIS has concluded, based on its proposal and the comments received, that the current practice of organoleptic examination by inspectors and the physical removal of visible contamination by establishments needs to be supplemented with an establishment-conducted microbial verification activity. This microbial testing is designed to verify, for the establishment and FSIS, that the establishment has controlled its slaughter process with respect to prevention and removal of fecal material and ingesta and associated bacteria.

Rationale for Using E. coli Tests to Verify Process Control

E. coli testing is more useful than the originally proposed *Salmonella* testing in verifying that a slaughter process is under control. This was expressed in numerous comments on the proposal, comments generated in FSIS public hearings, and the results of the scientific and technical conference on the Role of Microbiological Testing in Verifying Food Safety. The expert panel at that conference stated:

> Microbial testing is an essential element for verifying process control of raw meat and poultry. A variety of indicators exists, but the panel concluded that quantitative measurement of *Escherichia coli* would be more effective than qualitative *Salmonella* testing. When processes are under control for

E. coli, the potential presence of enteric pathogens will be minimized.[1]

The panel compared selection criteria for the choice of an indicator organism and considered alternative microbial targets such as *E. coli, Enterobacteriaceae,* and aerobic plate count, to be used alone or in combination with *Salmonella* testing. In reaching its conclusion that *E. coli* would be the most effective measure of process control for enteric pathogens, the panel considered the ideal characteristics of microbial indicators for the stated purpose. Important characteristics of *E. coli* are:

- There is a strong association of *E. coli* with the presence of enteric pathogens and, in the case of slaughtering, the presence of fecal contamination.
- *E. coli* occurs at a higher frequency than *Salmonella,* and quantitative *E. coli* testing permits more rapid and more frequent adjustment of process control.
- *E. coli* has survival and growth characteristics similar to enteric pathogens, such as *E. coli* O157:H7 and *Salmonella.*
- Analysis for *E. coli* poses fewer laboratory safety issues and testing at the establishment site is more feasible than such testing with *Salmonella.*
- There is wide acceptance in the international scientific community of its use as an indicator of the potential presence of enteric pathogens.

In the panel's view, microbial testing should be used to demonstrate process control; they concluded that a proximate indicator for enteric pathogens is needed for demonstrating process control with respect to fecal contamination. The panel concluded that *E. coli* would be the single most effective indicator for this purpose. The panel's conclusion reinforces previous statements by the NAS that ''at present, *E. coli* testing is the best indicator of fecal contamination among the commonly used fecal-indicator organisms.'' [2] FSIS agrees with these conclusions.

If future scientific research identifies another organism or group of organisms which would prove as effective in measuring process control for fecal contamination, FSIS would consider appropriate revisions to the regulations.

Use of Baseline Values to Establish E. coli Performance Criteria

The presence of some microorganisms on raw meat and poultry is unavoidable and highly variable. The goal of process control in a slaughter establishment is to minimize initial microbial contamination of the carcasses, remove harmful microorganisms that nonetheless may be present, control the proliferation of any remaining microorganisms, and prevent re-contamination. Process control criteria based on data from FSIS's nationwide baseline surveys will aid establishments in achieving this goal and complement the transition to HACCP.

FSIS collects data to develop and maintain a general, ongoing microbiological profile of carcasses for selected microorganisms of varying degrees of public health concern, and organisms or groups of organisms of value as indicators of general hygiene or process control, and to document changes in the profiles over time. FSIS's Nationwide Microbiological Baseline Data Collection Programs provide for sampling over a year's time to account for possible seasonal variations. This was the approach taken in collecting data from carcasses for all slaughter classes: steer/heifer, cow/bull, broilers, market hogs, and turkey. Sampling is designed to represent the vast majority of raw meat and poultry products produced, in most cases approximately 99% of the product produced. These programs are nationwide in scope. Enough samples are taken to enable the Agency to describe the annual distribution of test results. The number of samples collected also allows for control of sampling variation and non-sampling errors (such as missing samples, incomplete data, and inconsistent data). By contrast, FSIS's Nationwide Surveys provide a snapshot over a specified period of time less than a year. They involve a large enough number of samples to ensure a reasonable level of precision for estimates, given the prevalence of the microorganisms included in the surveys. This was the approach taken in developing baseline data for other raw meat and poultry products: ground beef (at inspected establishments and at retail), ground chicken, ground turkey, and fresh pork sausage.

For the current baselines, carcass samples were taken from fresh, whole chilled carcasses after slaughter and dressing but before any further processing took place. Samples were analyzed fresh, not frozen, to gather more accurate data on numbers of microorganisms, especially those that are more susceptible to freezing, such as *Campylobacter jejuni/coli.* FSIS personnel collected the samples tested in the surveys using standard Agency procedures for taking aseptic samples from animal tissues and for ensuring random sample selection.[3,4]

Reports of FSIS baseline programs and surveys are issued after testing results have been compiled and analyzed. Reports have been completed for cattle, broiler chickens, hogs, ground beef, ground chicken, and ground turkey. The collection and analysis of samples for the turkey baseline program and the fresh pork sausage survey will be underway soon; criteria for turkeys and fresh pork sausage will be determined upon completion of the sampling and analysis of results.

Establishment of E. coli Performance Criteria to Verify Process Control

Using data from the baseline surveys described in the preceding section, FSIS has developed animal species-specific, minimum performance benchmarks, or performance criteria, for *E. coli* on carcasses.

As explained above, these criteria are not enforceable regulatory standards. The *E. coli* performance criteria are intended to assist slaughter establishments and FSIS in ensuring that establishments are meeting their current statutory obligation to prevent and reduce contamination of carcasses by fecal material, ingesta, and associated bacteria. The criteria are flexible and are subject to amendment as FSIS and the industry gain experience with them and accumulate more data on establishment performance. The criteria are intended specifically to provide an initial basis upon which slaughter establishments and FSIS can begin to use microbial testing to evaluate the adequacy of establishment process controls to prevent feces, ingesta, and other animal-derived contaminants from contaminating the tissues intended for use as food.

FSIS has designed the criteria so that establishments meeting them are achieving results, in terms of *E. coli* levels, consistent with those being achieved by a large majority of the slaughter production in the United States, as reflected in the FSIS baseline

[1] Expert Panel's Summary Report and Recommendations, Scientific and Technical Conference on Role of Microbiological Testing in Verifying Food Safety, May 1–2, 1995.

[2] Subcommittee on Microbiological Criteria, Committee on Food Protection, Food and Nutrition Board, National Research Council. 1985. ''An Evaluation of the Role of Microbiological Criteria for Foods and Food Ingredients.'' National Academy Press, Washington, D.C.

[3] Food Safety and Inspection Service. 1994. Nationwide Broiler Chickens Microbiological Baseline Data Collection Program: Broiler Chicken Sample Collection Procedures, 2/18/94. U.S. Department of Agriculture, Washington, D.C.

[4] Food Safety and Inspection Service. 1993. Nationwide Beef Microbiological Baseline Data Collection Program: Cow/Bull Sample Collection Procedures, 8/1/93. U.S. Department of Agriculture, Washington, D.C.

surveys for each species of livestock and poultry.

The *E. coli* performance criteria are expressed in terms of a statistical procedure known as a ''3-class attributes sampling plan'' applied in a moving window. This procedure specifies cutoffs (denoted m and M, with m<M) for quantitative *E. coli* levels so as to define three classes of results: acceptable, marginal, and unacceptable. The definitions are:

Acceptable—result ≤ m
Marginal—result > m and ≤ M
Unacceptable—result > M

Under this approach, m and M are defined in relation to the distribution of *E. coli* results for each slaughter class. The Agency has used as the starting point for establishing the cutoff for m the 80th percentile of current industry wide performance, in terms of *E. coli* levels, for each slaughter class. The starting point for establishing M is the 98th percentile of industry performance. Thus, if the criterion for any species were set precisely at those percentiles, a set of test results indicating performance in the 80th to 98th percentile range, according to FSIS's Nationwide Microbiological Baseline Data Collection Program results, would be deemed ''marginal,'' and, as discussed below, would raise a question about the adequacy of the establishment's process control. Expressed in another way, ''marginal'' results would be within the worst 20% of overall industry performance in terms of *E. coli* counts. Similarly, results worse than the 98th percentile (M) are within the worst 2% of overall industry performance. Any single result exceeding M is, therefore, deemed ''unacceptable.''

TABLE 1.—DISTRIBUTION OF E. COLI BY SLAUGHTER CLASS

Percentile	Steer/heifer	Cow/bull	Broilers	Hogs
50th (median)	Negative*	Negative*	29 cfu/ml	Negative*
80th (m)	Negative*	Negative*	80	10 cfu/cm^2
90th	Negative*	10 cfu/cm^2	180	150
95th	10 cfu/cm^2	40	360	880
98th (M)	80	300	1100	6,800
99th	290	2200	3300	33,000

*Negative by the method used in the baselines which had a minimum detectable level of 5 cfu/cm^2 of carcass surface area.

Table 1 shows the level at which *E. coli* has been found on carcasses, by slaughter class as a percent of all such product. For example, the data show that 80% of broilers tested at or below 80 colony forming units per milliliter (cfu/ml), while 90% tested at or below 180 cfu/ml. More detailed descriptions of the distribution of numbers of *E. coli* found per carcass species are provided in FSIS's baseline reports.

To make the criteria as simple and easy to use as possible, consistent with the accepted laboratory practice of diluting samples successively by factors of 10 to obtain bacteria counts, FSIS has elected to express the criteria in terms of powers of 10 (i.e., 10, 100, 1000, etc.). As shown in Table 2, this results in m and M being the closest power of 10 to the actual numbers estimated for the 80th and 98th percentiles from the baseline data.

Because the Agency's baseline survey work on turkeys is still underway, no *E. coli* criterion is being established at this time for that slaughter class.

TABLE 2.—M AND M VALUES FOR E. COLI PERFORMANCE CRITERIA

Slaughter class	m	M
Steer/Heifer	(1)	100
Cow/Bull	(1)	100
Broiler	100	1000
Hogs	10	10,000

[1] Negative.

It should be noted that ''negative,'' in this context, is defined by the sensitivity of the method used in the Baseline Surveys, which was 5 cfu/cm^2 of carcass surface area for cattle and hogs.

FSIS is requiring the use of an analytic method approved by the Association of Official Analytic Chemists or any method validated by a scientific body in collaborative trials against the three tube Most Probable Number (MPN) method and agreeing with the 95 percent upper and lower confidence limit of the appropriate MPN index.

FSIS has concluded that, at some point, the number of samples testing in the marginal range raises a significant question about the adequacy of an establishment's process control, and has defined that point for purposes of these criteria as more than 3 results above m within any consecutive 13 samples tested. This point was established based on the following analysis.

There occasionally will be test results that exceed the acceptable level, m, because of variations or aberrations in establishment performance, sampling, etc., that do not reflect the state of overall process control. FSIS believes that the performance criteria and approach to evaluating test results should avoid raising a significant process control question on the basis of chance results, but should be sensitive enough to provide a reasonably high likelihood of detecting performance that falls significantly short of the national baseline levels. FSIS has decided that it is appropriate to evaluate test results in a manner that ensures that there is an 80% probability that establishments actually operating at the acceptable performance level will achieve results that are deemed to satisfy the criteria. This is the same statistical approach FSIS took in its proposed approach to evaluating an establishment's *Salmonella* test results, using the moving window approach to evaluating process control verification tests (see pages 6798–6805 of the Pathogen Reduction/HACCP proposal).

Using this approach, it can be predicted statistically that slaughter establishments that are operating at the acceptable performance level reflected by m will, with an 80% probability, have three or fewer results above m (denoted as c) within every 13 samples tested (denoted as n). FSIS will require slaughter establishments to record and evaluate *E. coli* results in a ''moving window'' of 13 consecutive results. A moving window provides a continuous picture of establishment performance and is the preferred statistical approach for assessing ongoing processes (as opposed to sampling specific lots of product for contaminants). Thus, the presence of more than three marginal results within any 13 consecutive samples, or the ''window,'' will be indicative of an operation failing to meet the criteria.

Use of a different probability level, such as a 70% or 90% probability of getting acceptable test results if establishments are operating at the specified level would result in different values for c and n (namely, c=3 and

n=15 using the 70% probability level, and c=3 and n=10 using the 90% probability level). Using 70% as the statistical criterion for setting c and n would result in too many chance failures of the criteria, while using 90% would make it too difficult to detect potential process control problems. It is the judgment of the Agency that use of the 80% probability level strikes a reasonable balance.

In summary, if the results of one test are above M, or if more than 3 of 13 test results are above m, a significant question is raised as to whether the establishment is maintaining adequate process control and will trigger further review of establishment process control. FSIS stresses again that these *E. coli* criteria are guidelines, not regulatory standards. Ideally, each establishment will develop its own equally or more effective criteria for process control based on its own data and/or industry-developed benchmarks. FSIS encourages establishments, in the context of their HACCP plans, to apply their own, establishment-specific criteria to ensure process control.

FSIS also is inviting comment on the approach it has taken to expressing its *E. coli* performance criteria for verifying process control. FSIS recognizes that there is more than one possible approach and welcomes comments and suggestions.

Sampling Frequency for E. coli Testing

FSIS has chosen to use production volume as the basis for determining the frequency at which establishments will conduct testing for *E. coli*. In the proposed rule, FSIS proposed to require all slaughter establishments and establishments producing ground meat and poultry, regardless of size or volume, to conduct one test for *Salmonella* each day. This was based on the premise that verifying that a process is ''in control'' is more a function of specific establishment characteristics than the amount of product being produced. However, commenters suggested and FSIS recognizes that there may be striking differences in the ways in which high and low volume establishments operate, which can influence the ability of the establishment to keep processes in control. High volume establishments may receive animals for slaughter from a number of different sources for each day's production; there may be several shifts, and production personnel are often more transient; there may be multiple supervisors; and there may be much greater complexity in the overall slaughter process. In contrast, a low volume establishment will have a smaller and possibly more stable work-force, often supervised by an owner-operator, and may employ relatively simple procedures that are performed consistently over time. This does not negate the need in low volume establishments for microbial verification of a HACCP plan; however, under these circumstances it may not be as essential for very low volume establishments to undertake daily microbial testing, as initially proposed. By adopting a volume-based system, the testing frequency will, by definition, be highest in large establishments producing the most product, while the number of tests will be minimized in smaller establishments.

The majority of commenters who opposed daily testing stated that such a testing requirement would place an unfair cost burden and have a negative financial impact on small establishments, as it would require the same expenditure for testing by establishments that slaughtered one or two animals per day as those slaughtering several thousand daily. It was also noted that there is a public health consequence to the proposed approach. If a process control problem detectable by microbial testing existed in a high volume establishment that tested only once a day, a great deal more potentially contaminated product would be produced and distributed before enough microbial tests were performed to show the problem existed than would be the case in a small volume establishment. These issues are addressed by the switch to a volume-based testing system.

There is no single method for determining the frequency of microbial testing within a volume-based testing system that will be equally effective in all establishments. Testing frequencies are ideally determined on an establishment-by-establishment basis, taking into account a number of variables, including differences in sources of raw materials, the type and nature of the process, and the consistency of microbial test results over time. Nonetheless, for both public health and process control verification reasons, FSIS considers it necessary and reasonable to require a minimum frequency of testing sufficient to result in completion of at least one *E. coli* test window (13 samples) per day in the highest volume establishments for each species. This will provide a daily set of results adequate to verify process control in the highest volume establishments. Accumulation of results over a longer period of time will be an acceptable basis for verifying process control in lower volume establishments.

Based on these principles and conclusions, the required minimum frequencies for *E. coli* testing for each slaughter species are as shown in Table 3.

TABLE 3.—E. COLI TESTING FREQUENCIES

Cattle	1 test per 300 carcasses.
Swine	1 test per 1,000 carcasses.
Chicken ...	1 test per 22,000 carcasses.
Turkey	1 test per 3,000 carcasses.

The frequencies were derived by first rank-ordering all slaughter establishments by species based on total annual production. This ranking, which was based on data from FY 1993 and FY 1994, revealed that establishment production volumes vary widely and that there are appreciable differences in the concentration of business among the industries. In cattle slaughter, 12 of 912 establishments accounted for over 42% of production, with the smallest of these slaughtering about one million head annually. On the small volume end, 620 establishments slaughtered fewer than 1000 head annually and together accounted for about one-half of one percent (0.5%) of national slaughter production. By contrast, there are ten or fewer very low volume establishments slaughtering chickens, and production is spread more evenly over the 240 establishments on the FSIS FY 1994 inventory of establishments. 42 of 240 slaughter establishments accounted for 40% of production.

FSIS has selected sampling frequencies so that in the subgroup of establishments accounting for 99% of total production for each species, the 5% of establishments with the highest production volume would each have to conduct a minimum of 13 *E. coli* tests, or at least one complete test window, each day. In addition, with these frequencies, 90% of all cattle, 94% of all swine, 99% of all chicken, and 99% of all turkeys will be slaughtered in establishments conducting a minimum of one *E. coli* test per day.

The above frequencies notwithstanding, FSIS has concluded that all establishments must conduct sampling at a frequency of at least once per week to provide a minimum, adequate basis for process control verification using *E. coli* testing. However, establishments with very low volumes, annually slaughtering no more than 6,000 cattle, 20,000 swine, or a combination of such livestock not to exceed a total of 20,000 with a maximum of 6,000 cattle, or 440,000 chickens or 60,000 turkeys (or a combination of such poultry not to

exceed a total of 440,000, with a maximum of 60,000 turkeys), will be required to sample once per week only until a sampling window that verifies process control has been completed and the results indicate that the slaughter process is under control. Establishments slaughtering more than one species would sample the species slaughtered in greater number. Once these criteria have been met, these establishments will be required to complete a new sampling window that verifies process control only once each year, in the 3-month period of June through August, or when a change has been made in the slaughter process or personnel.

The Agency is permitting these very low volume establishments to conduct as few as 13 tests per year, in part because of their relatively simple and stable production environments. The slaughtering equipment in many cases may consist merely of a skinning bed, hoist, bonesaw (for poultry establishments, a small scalding tank, small defeathering device), and/or several types of knives. There are fewer personnel and there is less turnover in general. Of course, these establishments do change. Should there be any substantial changes in installed equipment or personnel, a new sampling window must be completed. These establishments must also complete a successful sampling window annually, regardless of whether there have been any substantial changes, in order to verify that the performance criteria continue to be met. Many small, nonsubstantial changes, in aggregate, may have an impact on process control. This annual testing must be conducted during the summer months of June through August, when there is a seasonal peak in the occurrence of foodborne diseases attributable to the major bacteria pathogens. Published and summary reports of Centers for Disease Control and Prevention (CDC) outbreak and sporadic disease surveillance have documented this seasonal trend for *Salmonella spp*.[5,6] and for *Campylobacter jejuni/coli*.[7] Although national surveillance for *E. coli* O157:H7 is relatively new and data are not available, Washington State surveillance has documented a similar seasonal trend for that pathogen.[8] The proposed requirement of one *Salmonella* sample per day would have assured testing during this period.

Therefore, the regulation specifies that when sampling and testing is done annually, instead of continually, it be conducted within a 13-sample window between June and August each year. This annual sampling must occur during this period, regardless of when other sampling windows may have occurred. Completing a successful sampling window annually will verify that the slaughter process continues to meet the performance criteria or will point to the need to reassess and revise the HACCP plan.

Another reason for this approach to very low volume establishment testing is that the total risk of exposure to enteric pathogens from product produced at such establishments is assumed to be small and roughly proportional to the amount of product produced. Eighty-one percent of establishments slaughtering cattle would meet this low volume criteria; however, these establishments together supply only 1.5% of the total national production. Further, establishments meeting these low volume criteria constitute 86% of all swine establishments, accounting for 1.3% of overall production. Thirteen percent of all establishments slaughtering chicken would meet this low volume requirement; however, these establishments together supply only 0.05% of total national production. Similarly, 42% of all turkey establishments are low volume establishments accounting for only 0.1% of production.

FSIS intends that establishments operating under a validated HACCP system use microbial testing in their process control verification activities, and is requiring that slaughter establishments under HACCP use *E. coli* testing for that purpose. As noted above, however, the Agency acknowledges that there may be other, perhaps equally effective alternative approaches for determining sampling frequencies for *E. coli* testing for process control verification in slaughter establishments with a carefully designed HACCP system. The Agency is aware that comparable models have been developed in the context of quality assurance programs. These models, however, are part of programs that, like HACCP, involve more than mere statistical sampling, and usually are much more oriented to specific establishment/process/product combinations. Such models cannot easily be transferred to a nationwide collection of producers of a product, each with unique characteristics. The frequency rule established in this regulation recognizes the relevance of establishment characteristics in the area of verification, as in other facets of the HACCP plan, and therefore allows slaughter establishments to alter frequencies as appropriate for their circumstances when they institute HACCP. That is, slaughter establishments under HACCP may use a sampling frequency other than that provided for in the regulation, if the alternative sampling frequency is an integral part of the establishment's HACCP verification procedures and if FSIS does not determine, and notify the establishment in writing, that the alternative frequency is inadequate to verify the effectiveness of the establishment's processing controls. Establishments electing to institute HACCP prior to the dates required may use an alternative sampling frequency upon presentation to FSIS of data demonstrating the adequacy of that sampling frequency for verification of process controls to prevent fecal contamination.

Establishments currently using an alternative *E. coli* sampling frequency for process control purposes, but not yet under a HACCP plan, will have to test at the frequencies specified in the regulation unless they have been granted an exemption by FSIS. However, after consideration of comments received on this rule that may result in protocol changes affecting all establishments, and publication of a Federal Register document addressing the comments, FSIS will consider requests for such exemptions on a case-by-case basis, upon the timely submission to FSIS of data demonstrating the adequacy of the alternative frequency for verification of process controls to prevent fecal contamination.

Sampling and Analytical Methodology

Carcasses within the same establishment and in different establishments must be sampled and analyzed in the same manner if the results are to provide a useful measure of process control. Such consistency also will facilitate FSIS verification activities. As discussed below, the performance criteria are applicable to each type of carcass, industry-wide, based on FSIS's national baseline survey data. Because each establishment's performance is measured against the

[5] Bean, N.H. and P.M. Griffin. 1990. Foodborne Disease Outbreaks in the United States, 1973–1987. J. Food Protection. 53:804–817.

[6] Centers for Disease Control and Prevention. 1995. Salmonella Surveillance, Annual Tabulation Summary, 1993–1994. U.S. Department of Health and Human Services, Public Health Service, Atlanta, GA.

[7] Tauxe, R.V., N. Hargrett-Bean, C.M. Patton, and I.K. Wachsmuth. 1988. *Campylobacter* Isolates in the United States, 1982–1986. MMWR. 37 (SS–2):1–13.

[8] Ostroff, S.M., J.M. Kobayshi, and J.H. Lewis. 1989. Infections with *Escherichia coli* O157:H7 in Washington State. JAMA 262(3):355–359.

performance of all surveyed establishments producing the same kind of product, it is essential that all like establishments adhere to the same basic sampling and analysis requirements.

Each establishment is responsible for having written sampling procedures that are to be followed by a designated employee or agent. Samples are to be taken randomly at the required frequency. If an establishment runs more than one line, the lines from which samples are to be taken also are to be selected randomly. Samples from livestock carcasses are to be collected by a nondestructive method that requires a commercially available sampling sponge to be rubbed on the carcass surface after the carcass has been chilled in the cooler for 12 hours or more after slaughter. Establishments are required to take samples from three sites on each carcass. These three sites are the same ones that were used by FSIS when conducting the baseline studies for cattle and swine. On cattle carcasses, establishments will take samples from the flank, brisket, and rump areas; on swine carcasses, samples will be taken from the ham, ''belly,'' and jowl areas. The sponge is to be placed afterwards in an amount of buffer to transfer any *E. coli* to a solution, which then is analyzed for *E. coli.* Samples from poultry carcasses will be collected by taking whole birds from the end of the chilling process, after the drip line, and rinsing them in an amount of buffer appropriate for the type of bird being tested.

The sponge sampling technique to be used on swine and cattle carcasses has been subject to many studies. A sponge technique has been reported by Dorsa *et al.*[9] and others, including Gill *et al.*[10], as an acceptable means of in-plant sampling to detect fecal contamination.

The excision method for sample collection would not be acceptable for routine sampling to verify process control because this defaces the carcass, and some establishments would be required to sample 13 carcasses per day. Instead, for both cattle and swine carcasses, the sponge method requires that 100 cm^2 at each of the three sites be sampled by swabbing, for a total area of 300 cm^2 compared to the 60 cm^2 area of excised tissue analyzed in the baseline studies for cattle and swine. The results would still be reported on a square centimeter basis. The larger sampling area for the swabbing method is expected to provide results comparable to the excision technique.

The exact correlation between the sponging technique and the excision technique used during the baseline surveys is being assessed by ARS. Currently available results indicate a high degree of correlation between the two. These studies and any other new microbial sampling data will be made available to the public. This sponging technique will also be used in the FSIS *Salmonella* program. FSIS is continuing to improve the sponging technique and welcomes comments.

FSIS considered providing that samples be taken from only one site on livestock carcasses: from the brisket on cattle and the belly area on swine. Sampling from one site has advantages. It would be less labor intensive. Further, sampling from one site might pose fewer worker safety problems than sampling from three sites because, for the latter option, a ladder generally is needed to reach the rumps of the suspended carcasses. Nonetheless, FSIS has determined that slaughter establishments must take samples from the three sites from which samples were drawn during the baseline studies or programs in the absence of data demonstrating that one-site sampling also will provide results comparable to the baseline survey data. The Agency invites comments on its requirement that establishments collect samples from the specified three sites on swine and cattle carcasses and the adequacy of alternative sampling approaches.

Samples may be analyzed in either the establishment's own laboratory or a commercial laboratory. Samples must be analyzed by a quantitative method of analysis for *E. coli.* The method must be approved by the Association of Official Analytic Chemists or validated by a scientific body in collaborative trials against the three tube most probable number (MPN) method and agreeing with the 95 percent upper and lower confidence limit of the appropriate MPN index.

FSIS has developed and is publishing as an appendix to the document guidelines that provide additional, detailed information on how best to sample, test, record, and interpret results for *E. coli* under this regulation. FSIS invites comment on these guidelines.

Recordkeeping

Results of each test must be recorded, in terms of colony forming units per milliliter (cfu/ml) for poultry carcasses or per square centimeter (cfu/cm^2) for livestock carcasses, on a process control chart or table that permits evaluation of the test results in relation to preceding tests in accordance with the applicable criteria. These records must be maintained at the establishment for 12 months and must be made available to Inspection Program employees on request. Inspectors will monitor results over time, to verify effective and consistent process control.

Use of E. Coli Test Results by Establishments

As discussed in preceding sections, establishments slaughtering livestock or poultry are required to use *E. coli* testing and evaluation of the results to verify the adequacy of their process controls for fecal contamination. Any test result in the marginal range (above m) indicates to the establishment that there is a potential problem in its processing control that may require attention. If the number of test results above m exceeds the specific number allowed, c (3, for all species), in the specific number of consecutive tests in the moving window, n (13 for all species), the establishment has failed to meet the performance criteria, and a significant question has been raised about the adequacy of the establishment's process controls for fecal contamination. Review of the process by the establishment and necessary corrective actions are strongly suggested.

Results above the upper value M are unacceptable and should trigger immediate establishment review of slaughter process controls to discover the cause of the failure and to prevent recurrence, and, if a product has been affected, to consider the status and proper disposition of the product as the circumstances dictate.

Use of E. coli Test Results by FSIS

FSIS personnel, like establishment personnel, will use the *E. coli* test results to help assess how well the establishment is controlling its slaughter and dressing processes. FSIS will compare establishment test results to the applicable *E. coli* performance criterion. A single failure to meet the criterion does not by itself demonstrate a lack of process control or product adulteration, but it will trigger greater inspection activity to establish that all applicable sanitation and process control requirements are being met and product is not being adulterated. Inspectors may make additional visual inspections of products and/or equipment and facilities, collect samples for FSIS laboratory analysis, and retain or condemn product, as appropriate. In addition, Sanitation

[9] Dorsa, W.J., C.N. Cutter, G.R. Siragusa. 1996. Evaluation of Six Sampling Methods for Recovery of Bacteria from Beef Carcass Surfaces. Letters in Applied Microbial. 22:39–41.

[10] Gill, C.O. J.C. McGinnis, M. Badoni. 1996. Assessment of the Hygienic Characteristics of a Beef Carcass Dressing Process. J. Food Protection 59(2):136–140.

SOP's and HACCP records will be reviewed, as appropriate. Failure to meet the criterion may also result in the establishment being selected for intensified Agency testing for *Salmonella* under the pathogen reduction performance standard sampling program; and, if the establishment produced ground beef, its product could be targeted in the *E. coli.* O157:H7 ground beef testing program.

The *E. coli* test results will be used by FSIS, along with all other relevant data and observations, including past establishment performance, to determine whether a slaughter establishment is meeting its process control responsibilities. Repeated failures to meet the criterion would lend support to a finding that the establishment's process controls are inadequate. Failure to maintain adequate process control will result in suspension and withdrawal of inspection, as appropriate. Such actions will be made in accordance with rules of practice that will be adopted for those proceedings.

After a slaughter establishment implements HACCP, the *E. coli* testing program will continue as a HACCP verification activity. Isolated or occasional failures to meet the *E. coli* performance criterion may indicate that establishment personnel need to take corrective actions spelled out in their HACCP plan. Repeated failures to meet the criterion will result in FSIS focusing its verification oversight on relevant CCP's, which could lead to the need for HACCP plan reassessment by the establishment, as well as other inspection and compliance related activities that may be appropriate, as discussed above.

Implementation Timetable

Six months from this publication date, establishments that slaughter livestock or poultry will be required to begin sampling and testing for *E. coli* at the volume-based rates described above. From that time, those establishments that do not test or fail to keep records of results as prescribed by the regulation will be subject to withdrawal of inspection in accord with the procedures set forth in 9 CFR 335.13 or 381.234. After another six months, i.e., 12 months after publication of this final rule, after establishments have had an opportunity to gain experience in conducting this testing, recording the results, and using the data to verify and improve process control, FSIS personnel will incorporate the review of establishment *E. coli* test results into its inspection routine.

In considering the timeframe for implementing the *E. coli* testing requirement, FSIS has taken into account the practicality of initiating such testing in a large number of establishments, the potential utility of the resulting data to establishments as they prepare for HACCP implementation, and the added consumer protection of having establishments, particularly those scheduled to implement HACCP towards the end of the implementation timetable, initiating testing and evaluating results against the process control performance criteria. FSIS is aware that many establishments, especially large ones, already use microbial testing as a means of verifying their process control systems; many may already be testing for generic *E. coli.* Some of those establishments may already have HACCP plans in place as well. Establishments performing microbiological testing and already working under HACCP plans have found that such testing is an important element in conducting a hazard analysis, validating HACCP plans, and verifying the ongoing effectiveness of HACCP systems.

For establishments that are not already performing microbiological testing and not operating under HACCP plans, the data will be valuable in revealing how well or poorly their slaughter process is performing in microbiological terms, when compared against the microbial characteristics of a large portion of national production, and will provide an indication of whether immediate actions are required to prevent product adulteration and protect food safety. In addition, such data, when accumulated over a period of time, will contribute to the conduct of hazard analyses and selection of process control measures. Collection of these data will provide benchmarks for each establishment as it begins to understand the food safety implications of its processes and how to improve them.

In the meantime, FSIS personnel, using the performance criteria as benchmarks for overall industry performance in terms of the number of *E. coli* organisms found on carcasses at a specific point in the slaughter process, will be able to review establishment data and other evidence to determine if each establishment is achieving an acceptable level of performance.

Request for Comments

The Agency is soliciting additional comment and information on a number of technical issues concerning the protocols for *E. coli* testing, and on that basis will consider adjusting those protocols prior to the effective date. In particular, two concerns have been raised on the issue of the rule's statistical framework: 1) the representativeness of the proposed sample collection, and 2) the levels and distribution of *E. coli* on carcasses and the ways in which these levels affect the utility of the proposed testing protocol.

Because poultry slaughter establishments must collect samples with a whole bird rinse, the representativeness of the sampling site is not an issue; the entire bird is being sampled. FSIS used this technique when collecting baseline data and therefore, establishment data should be comparable to baseline survey data. Further, greater than 99 percent of broiler carcasses in the national baseline survey had detectable *E. coli.* Generic *E. coli* testing data therefore clearly will be useful to poultry slaughter establishments as they initiate HACCP and begin to verify the associated process control procedures. *E. coli* testing procedures for poultry required by this rule comport well with the available scientific data and discussions held as part of the public comment process.

More difficult issues arose in developing *E. coli* sampling procedures for cattle and swine carcasses. Part of the concern, as discussed, stems from the fact that a whole carcass rinse is impossible with a large carcass, and thus it is necessary to select specific sampling sites. Selections of sites, in turn, may influence results, particularly if generic *E. coli* is not randomly distributed on the carcass. Site selection may also influence the usefulness of resultant data. For example, the appropriate response to an elevated generic *E. coli* level on the rump of a beef carcass may be different from the appropriate response to an elevated generic *E. coli* level at the site of the midline incision. The Agency wants comments on the relative merits of a one-site versus three-site sampling approach.

Another concern revolves around the correlation between non-destructive and destructive sampling. The baseline surveys used destructive sampling, that is, culturing of tissue excised from the carcass. FSIS agrees with commenters that reasonable results can be obtained with a non-destructive swabbing technique for sampling. Preliminary data indicate that results obtained with a destructive and non-destructive sampling are comparable, although studies continue.

Another concern arises from the statistical basis for *E. coli* testing. In

particular, the levels of generic *E. coli* on cattle carcasses in the national baseline survey were low, with the majority of carcasses having no detectable *E. coli*. This could raise questions about the utility of the *E. coli* test results in evaluating process controls in establishments slaughtering cattle.

The principal utility of process control testing stems from the availability to a establishment of results over time from that establishment. The tracking of trends and identification of anomalous results permits isolation and correction of problem areas that might otherwise go unnoticed. FSIS has concluded that testing for generic *E. coli* is the appropriate and necessary means by which meat and poultry slaughter establishments must evaluate and verify the adequacy of their process controls. FSIS considers systematic measures to prevent and remove fecal contamination and associated bacteria, coupled with microbial testing to verify effectiveness, to be the state of the art in slaughter establishment sanitation. Microbial testing for bacteria that are good indicators of fecal contamination and the regular availability of test results will help to focus establishments on the effectiveness of their measures for preventing and removing fecal contamination and will provide information establishments can use in maintaining adequate process control. FSIS reached this conclusion upon its review of written comments received on the proposal and comments made at the scientific conferences and public meetings, as well as available scientific data, and has retabulated and reassessed its baseline data as it applies to the *E. coli* testing in the rule.

In the first reassessment, it was determined that the lower levels and more frequent negative test results of *E. coli* found on livestock, particularly steers and heifers, as compared to poultry in the baseline survey data does not undercut the utility of the *E. coli* criteria which are also based on the baseline survey data. FSIS tested the performance criteria in this rule by applying it to plant-specific test results obtained during the baseline surveys. FSIS looked at data from establishments for which at least 20 test results were available, and listed the results by collection date much as would be done by the establishments under the rule. The Agency found that about half of the establishments in each of the livestock slaughter categories fully met the criteria, which suggests that those establishments have good process controls for prevention of fecal contamination. The Agency also found that many establishments failed to meet the applicable *E. coli* criterion (any result above M, or more than 3 results above m out of the most recent 13 test results): 2 out of 30 steer/heifer establishments, 10 out of 34 cow/bull establishments, and 11 out of 31 market hog establishments failed to meet the criterion at least 20% of the time, suggesting that a significant number of livestock slaughter establishments should review and make adjustments to their process controls.

The Agency also made an assessment of whether the baselines show true differences in *E. coli* results among establishments that slaughter the same categories of livestock. The Agency did a statistical analysis of a hypothesis: percents positive are equal among establishments slaughtering the same category of livestock. The analysis involved comparing *E. coli* test results of pairs of establishments. This comparison showed wide ranges in the percents positive between establishments albeit smaller differences among steer/heifer establishments. The percents positive ranged between 0.0 to 27.1 for steer/heifer establishments, 0.0 to 45.2 for cow/bull establishments, and 2.2 to 97.1 for market hog establishments. The hypothesis, therefore, was rejected because the data showed significant differences in the prevalence of *E. coli* on carcasses of animals found in establishments slaughtering the same categories of livestock.

The retabulated data developed for these two analyses are available for viewing in the FSIS Docket Room (See **ADDRESSES**) as part of the administrative record of this rulemaking.

FSIS invites comments on the statistical frameworks it has used for *E. coli* testing and performance criteria. The Agency is open to the possibility that it might further improve its testing protocols prior to the implementation date, and is seeking additional relevant scientific and economic data. In particular, in light of the concerns noted above, FSIS is seeking additional data relating to the distribution of generic *E. coli* on cattle and swine carcasses, differences in *E. coli* levels within and between establishments, and the appropriateness of various data sets for establishing the proposed 80th and 98th percentile national criteria for generic *E. coli* levels on cattle and swine carcasses.

FSIS also requests comments and information addressing the following questions:

Are there alternative, equally or more effective risk based microbial sampling protocols that could be used for process control verification by establishments that slaughter cattle or swine?

Are there more appropriate anatomical sites for microbial testing than those adopted?

Are there alternative sampling frequencies that would elicit results more indicative of process control performance?

How could the proposed testing protocol be revised to better account for differing establishment characteristics and how can FSIS minimize the cost to establishments of *E. coli* testing without sacrificing testing effectiveness?

Are there worker safety concerns regarding sampling from difficult to reach carcass sites and, if so, how might they be mitigated?

Given that testing is based on production volume, are there effective approaches other than requiring very small establishments to conduct a minimal amount of testing during certain months of the year?

FSIS is aware that some individuals, companies, and trade groups have conducted research and have data on the various carcass sampling sites and associated levels of bacteria at these sites (carcass mapping). FSIS welcomes any information concerning *E. coli* and other microorganisms at various sites on carcasses.

FSIS has opted to establish performance criteria based on the levels and distribution of *E. coli* for the various slaughter classes. Some individuals and companies may have established their own criteria for process control verification. FSIS welcomes information on the rationales, sampling plans and protocols on which any such criteria are based, as well as data (or data summaries) collected under such protocols.

FSIS welcomes any new or unpublished research results or information that exists concerning the relationship between the presence of generic *E. coli* and the presence of other pathogenic microorganisms on cattle and swine carcasses.

FSIS specifically invites establishments currently conducting generic *E. coli* testing for process control verification to submit data regarding their costs, including labor and training costs, as well as testing costs per unit. FSIS will use this data to assess the merits of alternative testing protocols.

FSIS invites comments on how, and the extent to which, it should summarize and make available to the industry and public *E. coli* testing data made available to it under these regulations. Reports on the collective experiences of establishments with various characteristics could be useful to the industry, the Agency, and the public at large.

In light of these issues, in particular those reflecting continuing concerns

about the applicability of the national criteria to all affected establishments, the frequency and other parts of the testing protocols, and the statistical utility of the establishment's test results as a measure of process control, FSIS plans to conduct two public conferences. The first conference is planned to be held approximately 45 days into the 60 day comment period following publication of this rule. This public conference will be led by a panel of scientists from FSIS and other government agencies who will listen to testimony and review comments received on these technical issues and share their observations and opinions. FSIS will consider their input along with all comments received as the basis for any necessary technical amendments, which will be completed at least 30 days before the implementation date. The second public conference is tentatively planned for approximately 9 months following publication of this final rule. This conference would be an opportunity for the industry and others to discuss with FSIS new information based on about 3 months of testing experience that may bear on these same issues and might allow for further adjustments of protocols before FSIS inspectors are tasked, about three months later, with comparing test results to the national criteria as part of their inspection routine. FSIS will publish further, more detailed notice of these conferences in future issues of the Federal Register.

Pathogen Reduction Performance Standards

The pathogen reduction performance standards for *Salmonella* FSIS is establishing in this final rule complement the process control performance criteria for fecal contamination and *E. coli* testing.

The likelihood of product contamination by *Salmonella* is affected by factors in addition to the incidence or degree of fecal contamination, including the condition of incoming animals and cross contamination among carcasses during the slaughter process and further processing. Under HACCP, establishments will be expected to establish controls wherever practicable to address and reduce the risk of contamination with harmful bacteria. The pathogen reduction performance standards FSIS is establishing for *Salmonella* are an important step toward enabling FSIS and the establishment to verify the aggregate effectiveness of an establishment's HACCP controls in reducing harmful bacteria.

Rationale for Selecting Salmonella

In the future, FSIS may develop pathogen reduction performance standards targeting a number of pathogens. Initially, however, FSIS has developed pathogen reduction performance standards only for one—*Salmonella. Salmonella* is an enteric pathogen, which as a group cause most preventable illnesses associated with meat and poultry.

FSIS has selected *Salmonella* because: (1) it is the most common bacterial cause of foodborne illness; (2) FSIS baseline data show that *Salmonella* colonizes a variety of mammals and birds, and occurs at frequencies which permit changes to be detected and monitored; (3) current methodologies can recover *Salmonella* from a variety of meat and poultry products; and (4) intervention strategies aimed at reducing fecal contamination and other sources of *Salmonella* on raw product should be effective against other pathogens.

Basis for Performance Standards and Plans for Future Adjustments

The pathogen reduction performance standards for *Salmonella* are based on the current prevalence of *Salmonella*, as determined from FSIS's baseline surveys. Current prevalence percentages based on the data from these surveys are listed in Table 4 and in the regulations (new §§ 310.25(c)(3)(ii) and 381.94(c)(3)(ii)) under the column headed ''Performance Standard.'' This is the performance standard that establishments must achieve, not on a lot-by-lot basis, but consistently over a period of time through appropriate and well-executed process control.

This is the same approach to setting the ''interim targets for pathogen reduction'' that FSIS proposed in its Pathogen Reduction/HACCP proposal. As explained in the preamble to that proposal, basing the performance standard on the national baseline prevalence means that some establishments are already meeting or exceeding the standard, while other establishments are not. FSIS believes that it is feasible for all establishments to meet or exceed the current baseline prevalence of contamination with *Salmonella,* through careful process control to prevent contamination and incorporation of readily available food safety technologies and procedures to remove contamination. The feasibility of achieving this standard is demonstrated by the fact that many establishments are already doing so.

The Agency believes that most establishments maintaining sanitary conditions under their Sanitation SOP's and operating under validated HACCP plans, as provided for elsewhere in this regulation, will be able to meet the pathogen reduction performance standards without major new costs. For example, HACCP plans for slaughter establishments are expected to address the condition of incoming animals, and may provide for more systematic control of relevant processes or interventions, such as the cleaning of animals or carcasses before evisceration. HACCP systems should, therefore, result in many establishments improving the microbial profile of their finished raw products.

Slaughter establishments concerned that they might not meet the pathogen reduction performance standard have available a wide range of technologies shown to reduce the levels of pathogens that may be on the surface of carcasses. As discussed in some detail in the proposed rule, antimicrobial treatments normally include washes or sprays that use either hot water or a solution of water and a substance approved by FSIS for that use. Such substances include acids (lactic, acetic, and citric), trisodium phosphate (TSP), and chlorine. In addition, FSIS has recently established that spray-vacuum devices that apply pressurized steam or hot water to beef carcasses and immediately vacuum it up also are effective in reducing bacteria on carcasses.

Establishments producing raw ground product from raw meat or poultry supplied by other establishments cannot use technologies for reducing pathogens that are designed for use on the surfaces of whole carcasses at the time of slaughter. Such establishments may require more control over incoming raw product, including contractual specifications to ensure that they begin their process with product that meets the standard, as well as careful adherence to their Sanitation SOP's and HACCP plan.

By basing its *Salmonella* performance standards on the current national baseline prevalence for each major species and product class, FSIS is applying a uniform policy principle: all establishments must achieve at least the current baseline level of performance with respect to *Salmonella* for the product classes they produce. This policy is based on the public health judgment that reducing the percentage of carcasses with *Salmonella* will reduce the risk of foodborne illness, and on the regulatory policy judgment that establishing for the first time a clear standard for Salmonella, in conjunction with the implementation of HACCP, will lead to significant reductions in

contamination rates. This policy is not based on a quantitative assessment of the risk posed by any particular incidence of *Salmonella* contamination or the determination of a ''safe'' incidence or level. There is not currently a scientific basis for making such assessments or determinations.

FSIS recognizes that this approach results in a range of performance standards among the various product classes (see Table 4). For example, the current *Salmonella* prevalence for broilers is 20 percent, while the current prevalence for steers and heifers is 1 percent. This range reflects the current level of performance for each class of product, as reflected in the FSIS baseline surveys.

FSIS intends to revise its *Salmonella* performance standards periodically as new baseline prevalence data become available and in furtherance of the Agency's goal of reducing the risk of foodborne illness. FSIS will periodically repeat its baseline studies to assess the overall progress of the pathogen reduction effort. Also, as indicated below in the discussion of the FSIS testing strategy, FSIS will be conducting extensive *Salmonella* testing to ensure compliance with the pathogen reduction performance standards. If the data from this testing or future baseline surveys justify revision of the performance standards, FSIS will promptly publish such revisions for public comment in the Federal Register. FSIS anticipates revision of these performance standards downward as justified by progress in pathogen reduction and demonstrated reductions in the national baseline prevalence of *Salmonella.* In making such adjustments, FSIS will take into account the state of scientific knowledge, available technology, feasibility, and public health benefits to be achieved. FSIS will also consider the current level of industry performance with respect to *Salmonella* prevalence in particular classes of livestock and poultry. It is anticipated that such adjustments would more likely occur in classes with the highest prevalence. FSIS originally proposed to call these performance ''interim'' standards or targets. The final rule removes that language.

Approximately 15 months after the publication of this final rule, FSIS will convene a public conference to review available *Salmonella* data and discuss whether they warrant refining the *Salmonella* performance standards. Prior to the conference, FSIS will make available the data resulting from the pre-implementation phase of the FSIS *Salmonella* testing program. FSIS also will take advantage of this conference to receive public input on the *E. coli* testing program. FSIS will extend an invitation to all interested parties.

Additionally, FSIS intends to work closely with other Federal agencies and the scientific community to improve the scientific basis for establishing food safety performance standards for microbial pathogens. In particular, the Executive Office of the President, Office of Science and Technology Policy, will oversee a task force to determine what research and data collection are needed to develop a workable approach to quantitative risk assessment for foodborne pathogens and determine the most cost-effective way of conducting the necessary research. FSIS and other USDA agencies will participate in this government-wide task force.

Determining Compliance With the Standard

The pathogen reduction performance standards specify for each species and category of raw product a maximum number of positive test results (c) permitted to be found in a specified number of samples (n) for each class of raw product before the establishment will be deemed to be exceeding the performance standard. The standards were determined by first calculating for each category of product tested in the FSIS national baseline programs and surveys the percentage of *Salmonella* positives nationwide. This is, in effect, the performance standard that must be achieved consistently by each establishment over time. Then the number of samples to test (n) and the number of positives to allow from among those samples (c) were calculated to provide approximately an 80% probability of passing when the establishment is operating at the national baseline prevalence of *Salmonella* positive results, i.e., just within the performance standard. As discussed in the preamble to the Pathogen Reduction/HACCP proposal and above with respect to *E. coli* testing, the statistical criteria for evaluating *Salmonella* test results balance the need to prevent establishments from failing to meet the standard, based on chance results, and the need to ensure both that violations are readily detected and that establishments have an incentive to improve their performance beyond what is minimally required by the standard. The resulting values for the pathogen reduction performance standards are shown in Table 4.

TABLE 4.—PATHOGEN REDUCTION PERFORMANCE STANDARDS

Class of product	Performance standard (percent positive for *Salmonella*) (%)	Number of samples tested (n)	Maximum number of positives to achieve standard (c)
Steers/Heifers	1.0	82	1
Cows/Bulls	2.7	58	2
Ground Beef	7.5	53	5
Fresh Pork Sausage	*NA	*NA	*NA
Broilers	20.0	51	12
Hogs	8.7	55	6
Ground Turkey	49.9	53	29
Ground Chicken	44.6	53	26
Turkeys	*NA	*NA	*NA

* Not available at this time.

FSIS has concluded that, for purposes of this rulemaking, it should rely only on FSIS baseline data for determinations of the prevalence of bacteria on which it is establishing standards. The proposal discussed the possibility of relying on other data sources, such as industry surveys or other reports in the scientific literature. No such data were

submitted to FSIS in response to the proposal, and FSIS has concluded that those alternative data sources are not likely to provide the nationwide, objective data that are needed for the Agency's regulatory purpose of establishing performance standards. FSIS will consider modifications of the scope and approach to these surveys and additional data sources, as the needs of public health dictate, but will continue to rely only on data that are gathered with appropriate scientific rigor.

FSIS has completed its baseline survey work and has issued reports on its findings for Steers/Heifers, Cows/Bulls, Broiler Chickens, Market Hogs, Ground Beef, Ground Chicken, and Ground Turkey. Copies of these reports are available for inspection in the FSIS Docket Room (see **ADDRESSES**).

FSIS is currently conducting the fresh pork sausage survey and will begin the Baseline Program for turkeys soon. Therefore, performance standards for fresh pork sausage and turkeys cannot be established at this time. The performance standards for these two classes of products will be published for public comment once FSIS's reports on the data are available.

FSIS will determine an establishment's compliance with the applicable pathogen reduction performance standard by taking the indicated number of samples, generally at the rate of one or more per day, testing each sample for *Salmonella,* and determining whether the number of positive results is above the maximum permitted for that product in the regulation.

FSIS has established performance standards for *Salmonella* on carcasses and on raw products derived from meat and poultry. Because *Salmonella* is more likely to be present on raw, ground, or comminuted products than on the carcasses from which they are derived, raw, ground, or comminuted product ordinarily will be the focus of FSIS compliance testing in those establishments that both slaughter and produce raw ground product.

The pathogen reduction performance standard applies to establishments, not to individual products. As discussed, microbiological testing of raw products for purposes of routinely separating adulterated from unadulterated products is impractical at this time. The pathogen reduction standard for *Salmonella* requires testing of products not for purposes of determining product disposition (although in some circumstances it may contribute to additional inspection or compliance activities that do), but rather as a measure of the effectiveness of the process in limiting contamination with this particular pathogen. If an establishment fails to meet the standard, it must institute corrective actions to lower the incidence of *Salmonella* on all such product it produces as measured by subsequent testing, or, ultimately, it must cease producing that product. The FSIS enforcement strategy is further discussed below.

FSIS Testing Strategy

FSIS's *Salmonella* testing program will be implemented in two phases, a pre-implementation phase and a compliance phase. The pre-implementation phase will begin approximately three months after publication of the final rule and initially will consist of an establishment-by-establishment survey of the slaughter establishments represented in the National Microbiological Baseline Data Collection Programs. These establishments account for approximately 99 percent of the total production volume for each of the major species slaughtered nationwide. The testing in each slaughter establishment will be conducted in a manner designed to provide a reliable picture of the establishment's performance throughout a 12-month period, in relation to the pathogen performance standard applicable to the species being slaughtered. It is anticipated that initially FSIS will take approximately 250 samples per establishment over a one-year period, with testing to be completed before the implementation date for the standard in each establishment.

FSIS will also conduct pre-implementation testing in ground product establishments and in establishments that account for the remaining one percent of production and that were not included in the FSIS baseline surveys. This testing will be conducted in a manner and at a level that takes into account the size and nature of the establishments involved. FSIS will provide more detail on this testing soon in a separate notice.

This pre-implementation testing will inform both the establishments and FSIS, prior to the actual enforcement of the performance standards, whether each establishment is already meeting the standard, is close to meeting the standard, or requires substantial improvement to meet the standard. As with all FSIS testing done to check compliance with the pathogen reduction standards, the testing results will be provided to the establishment by FSIS. These testing results will assist establishments in designing and validating their HACCP plans as needed to ensure that products meet pathogen reduction performance standards. This information also will assist FSIS to more effectively target its compliance testing after the standards go into effect, as discussed below. This FSIS-generated data on the prevalence of *Salmonella* on inspected products will be available to the public.

Upon the implementation of HACCP, and upon publication of Federal Register documents concerning the pathogen reduction performance standards for which baseline survey reports have not yet been published, FSIS will initiate phase 2, the compliance phase, of its *Salmonella* testing program in affected establishments. As an integral part of its overall responsibility for food safety, FSIS will conduct an ongoing testing program to determine compliance with the *Salmonella* performance standard for all classes of livestock and poultry. In addition, FSIS will conduct a program of targeted testing where warranted. The frequency and intensity of this testing will be determined based on past establishment performance, the establishment's own generic *E. coli* test results, FSIS inspectional observations, reports of illness associated with product produced at an establishment, the results of *Salmonella* testing during the pre-implementation phase, previous failures to meet the performance standards, and other factors.

The costs to FSIS of this testing for *Salmonella,* estimated to be approximately 2 million dollars annually, are addressed in the Final Regulatory Impact Analysis of this rule.

FSIS Testing Methods

Details of the sample collection and testing procedures the Agency will be using are in Appendix E, ''FSIS Sample Collection Guidelines and Procedure for Isolation and Identification of *Salmonella* from Raw Meat and Poultry Products.''

FSIS Enforcement Strategy

The objective of FSIS's enforcement policy with respect to microbial testing is to achieve compliance with the regulations. With respect to *Salmonella,* the Agency's goal is to achieve pathogen reduction by ensuring that all slaughter and ground product establishments meet the performance standards established by FSIS. FSIS intends to achieve this goal through an enforcement strategy based on the two-part testing program mentioned above: the ongoing testing, which will include all establishments at some fixed interval, irrespective of performance;

and targeted testing focusing on establishments unable to meet the *Salmonella* performance standard when tested by FSIS or for the other reasons discussed above.

The *Salmonella* enforcement strategy will embody an objective, uniform systems approach to ensure that it is administered and applied in a fair, equitable, and common-sense manner. The Agency will carefully monitor and adjust its enforcement program on an ongoing basis to ensure that its enforcement activities reflect these principles while ensuring food safety.

If ongoing or targeted testing in an establishment indicates the performance standard is not being met, FSIS will decide whether to conduct follow-up testing on the basis of several factors. If an establishment with *Salmonella* test results marginally above the limit takes corrective action, FSIS could judge, based on the establishment's actions and other factors relevant to ensuring food safety, that immediate follow-up testing is not necessary. If, however, that establishment were to take inadequate corrective action after failing to meet the *Salmonella* performance standard, or if it simply ignored that failure, FSIS will conduct a second series of tests. FSIS will invariably conduct further testing at all establishments whose test results significantly exceed the standard.

If an establishment fails the second, targeted series of FSIS-conducted tests, the establishment will be required to reassess its HACCP plan for the tested product, modifying the plan as necessary to achieve the *Salmonella* performance standard. If the establishment fails to modify its HACCP plan as necessary, or if it fails the third series of targeted tests, FSIS will suspend inspection services. The suspension will remain in effect until the establishment demonstrates its ability to meet the performance standard.

The probability of an establishment failing the Agency's pathogen reduction standard three consecutive times is less than 1% when the establishment prevalence is at the limit of the standard.

Implementation Timetable for Pathogen Reduction Performance Standards

Slaughter establishments and establishments producing raw, ground, and comminuted product subject to these pathogen reduction performance standards must meet the *Salmonella* standard at the time the establishment is required to implement HACCP. As explained in section II above, HACCP implementation will be phased in based on establishment size over a period of 18 to 42 months following the date of publication of this final rule. FSIS originally proposed a single two-year delayed effective date for its *Salmonella* performance standards. Many commenters argued that it was not reasonable to hold all establishments to the same effective date, and, furthermore, that it was more logical to hold establishments to compliance with the standard after, rather than before, HACCP was in place. This proposition also was strongly endorsed by many people who attended an information briefing and public meeting held by FSIS in Kansas City, Missouri, on May 22, 1995, expressly for small meat and poultry establishments and small businesses (60 FR 25869, May 15, 1995). They questioned, among other things, the need for and wisdom of a common implementation date for large and small establishments.

Harmonizing the effective dates with implementation of HACCP is more consistent with the nature of the pathogen reduction standards as measures of what establishments can and should achieve through HACCP-based process control. It will bring 74% of the nation's slaughter production of meat and poultry (by weight) under the performance standard 18 months following publication of this final rule. It will also facilitate the transition to HACCP, for both the FSIS workforce and affected establishments, by requiring all establishments to meet the performance standards as they implement HACCP.

Response to Comments

FSIS proposed to require that all meat and poultry slaughtering establishments and establishments producing raw ground product conduct daily microbial testing to determine compliance with interim targets for the reduction of *Salmonella.* FSIS proposed to require a single qualitative test per day, with daily results to be accumulated over time to provide information regarding the performance of an establishment's process and to collect data sufficient for process control verification. Daily testing was considered the minimal sampling necessary to detect process deviations within a realistic time frame.

The three issues most commonly raised by commenters concerning the proposed microbial testing requirements were the proposed selection of *Salmonella* as the indicator organism, the frequency of proposed testing, and the disproportionate costs to small establishments. Some commenters also argued that the regulatory approach was not justified and exceeded FSIS's legal authority.

The Indicator Organism

Many commenters opposed the use of *Salmonella* as the indicator organism, arguing that its low incidence in beef makes it a poor indicator of pathogen reduction in the species, the positive/negative test result is a weak measure of process control, and, compared to some nonpathogenic alternatives such as generic *E. coli, Salmonella* tests are more difficult, time-consuming, and costly. Others commented that testing for *Salmonella* alone is unacceptable, as there is no direct correlation between the presence of this organism and other pathogens such as *E. coli* O157:H7, *Listeria,* and *Campylobacter.*

Various alternative indicator organisms were suggested, including generic *E. coli* (biotype I), total plate counts, Enterobacteriaceae, Total Viable Counts (TVC), and Aerobic Plate Counts (APC). Commenters who recommended alternatives stated that tests for these organisms would be better indicators for process control and fecal contamination levels than tests for *Salmonella.* Still others requested that more studies be conducted to determine which type of indicator organism would be most useful for verifying process control.

Some commenters recommended retaining *Salmonella* as the target for pathogen reduction, but suggested adding a requirement for generic *E. coli* testing because it serves effectively as an indicator of fecal contamination in all species. A minority of commenters supported the proposed use of *Salmonella* as the indicator organism because of its significance as a cause of foodborne illness and because there are relatively simple tests available for detecting *Salmonella.* Some commenters recommended requiring testing for *Salmonella* and additional pathogens in selected species or products based on the degree of public health risk posed by the pathogen. A number of consumer groups requested a pathogen goal of zero for *E. coli* O157:H7.

These comments are generally addressed by the FSIS decisions to require slaughter establishments to test for generic *E. coli* as a means to verify process control for fecal contamination, and to have FSIS conduct testing for *Salmonella* for pathogen reduction.

FSIS considers systematic measures to prevent and remove fecal contamination and associated bacteria, coupled with microbial testing to verify effectiveness, to be the state of the art in slaughter establishment sanitation. Further, FSIS believes that testing for generic *E. coli* is the appropriate and necessary means by which meat and poultry slaughter

establishments must verify their process controls. FSIS reviewed written comments received on the original proposal and comments made at the scientific conferences and public meetings, as well as available scientific data, and has decided to require slaughter establishments to conduct testing for generic *E. coli* to verify process controls.

The Agency has concluded that each kind of testing serves an important function. Both play a major part in the Agency's pathogen reduction efforts, and working in unison will permit the Agency to use its inspection resources more effectively, and efficiently, thereby enhancing inspection.

E. coli testing for process control verification and *Salmonella* testing to enforce the pathogen reduction performance standard both are aimed at FSIS's objective to reduce the incidence of disease caused by foodborne pathogens. However, *E. coli* testing and *Salmonella* testing aim at the objective from different directions.

An ongoing screen for generic *E. coli* serves both the establishment and FSIS as a means of verifying that a slaughter facility's process is ''in control'' with regard to prevention of fecal contamination of the carcasses being produced. In other words, it becomes a marker for verifying a slaughter establishment's adherence to the zero tolerance for fecal contamination. Such testing provides a standard measure for verification of process control at the critical slaughter stage of production. Without such a standard measure, there is no objective basis upon which either the establishment or FSIS can determine the adequacy of process controls, from one establishment to another, in preventing fecal contamination. It will permit establishments to make ongoing adjustments or changes to their slaughter process when necessary to meet the performance criteria. The test results will also guide FSIS's ongoing inspection, permitting adjustments in intensity and focus as appropriate.

Generic *E. coli* testing to verify process control alone, however, does not adequately address legitimate public health concerns about pathogenic bacteria in and on raw product. *E. coli* (except for certain pathogenic subgroups) is not itself a cause of foodborne disease. It is a ''surrogate marker'' or ''indicator'' for fecal contamination, which in turn is a source of many pathogens that may contaminate products. Fecal contamination, however, does not always correlate with the presence of pathogens; high levels of *E. coli* may be present without pathogens, and pathogens may be present without high *E. coli* levels. Because testing for *E. coli* cannot serve as a surrogate for the presence of *Salmonella*, FSIS's specific public health objective of reducing nationwide *Salmonella* levels on raw meat and poultry products, including raw ground products, requires a standard and a testing regime that are directed at that pathogen.

The pathogen reduction performance standard for *Salmonella* must be met by all inspected establishments producing raw meat and poultry products. Agency testing for *Salmonella* is necessary for enforcement of that requirement. Slaughter establishments' *E. coli* testing, a means for verifying process control for fecal contamination, should promote improved process controls which should, in turn, result in reductions of *Salmonella* and other pathogens. But, *E. coli* testing cannot measure actual reductions and control of *Salmonella* nor be the basis for Agency enforcement of the pathogen reduction standards.

The test results from both kinds of testing are valuable to the Agency in the shift to a HACCP-based regulatory regime, but their value comes from the way they work together to verify the effectiveness of an overall system of preventive process control. The Agency continues to believe that pathogen reduction in inspected establishments requires that establishments build into their operations preventive measures and systems to reduce the potential for pathogens to be on products to begin with, and that such systems must be establishment-produced and establishment-specific. The Agency's HACCP and Sanitation SOP's regulations are intended to do that. However, these regulations are not self-enforcing. The Agency's inspection mandate does not permit it to simply assume that an establishment's systems are in fact producing uniformly safe and unadulterated products. Pathogen reduction will be achieved instead by the combination of HACCP plans validated as effective for pathogens of concern, *E. coli* testing by the establishment to provide on-going verification of process control for fecal contamination, and *Salmonella* testing by FSIS to enforce compliance with the pathogen reduction performance standards.

Frequency and Cost of Testing

Many commenters questioned the proposed frequency of daily testing for each species and for raw, ground products. The majority of commenters who opposed daily testing stated that this testing requirement would place an unfair cost burden and have a negative economic impact on some establishments, especially small volume establishments and establishments producing multiple species and multiple ground products that would require multiple tests. These commenters stated that under the proposed sampling methodology, a small establishment could conceivably conduct more tests per day than a very large establishment with a much higher production volume. Also mentioned was the fact that many of these establishments do not have on-site testing facilities and would have an additional cost of shipping samples for testing.

To minimize the economic impact on establishments, especially small establishments, some commenters suggested that FSIS should pay for microbial testing. Others recommended less than daily testing or other changes to the proposed sampling frequency. Various alternatives to the proposed sampling protocol were mentioned, but the sampling scheme recommended most often as the most equitable, and the one FSIS is requiring, is one based on production volume.

Although many commenters requested less frequent testing than that proposed, others supported the one sample per day testing requirement as an efficient means of verifying process control. Still others recommended testing even more frequently than once per day. These commenters asserted that testing once a day is inadequate to verify process control or to screen out product with pathogens. Their main concern was that the proposed sampling frequency and moving sum statistical procedure would allow inadequate process control to go undetected, resulting in large quantities of suspect product being produced; recommendations were made for a testing frequency more proportional to an establishment's production volume.

Some commenters requested that exemptions from the proposed daily microbial testing be made for small establishments and establishments that have consistently complied with their HACCP programs. Others requested exemptions for specific products including: raw ground meat products; cured products; thermally processed canned foods; frozen foods; boxed meat and beef and pork carcasses from other inspected establishments; minor species (i.e., sheep, lamb, goats, equines, guineas); and raw ground products to be further processed as fully cooked, ready-to-eat items, while others stated that exemptions for these items would be inappropriate.

FSIS has modified the proposal in response to these comments. As explained above, FSIS is requiring *E. coli* testing in slaughter establishments where the initial and primary opportunity for fecal contamination occurs. FSIS is not requiring *E. coli* testing of processed products. A more limited testing requirement is possible because oversight of slaughter establishment verification testing for *E. coli* is not the sole means relied upon by FSIS to detect or prevent lack of process control. It is only one of many aspects of establishment operations FSIS will inspect in assessing the adequacy of an establishment's process controls. In particular, FSIS will increasingly rely on its verification that HACCP systems are working as intended. HACCP principles require establishments to identify CCP's, monitor them to see that they are in control, and take appropriate corrective action when monitoring detects a deviation. This is where control must be exercised by the establishment and where any lack of control will be detected in a establishment operating under a validated HACCP system.

FSIS has reconsidered the proposed requirement of daily testing in all slaughter establishments, in part because of the unnecessary and disproportionate economic impact that would occur for some small establishments. Instead, FSIS is requiring slaughter establishments to test carcasses for generic *E. coli* at frequencies corresponding to production volume. In addition, slaughter establishments will have 6 months, not just 3 months as proposed, after publication of the final rule to begin testing carcasses for generic *E. coli*. Further, very low volume establishments may not need to do more than one set of 13 *E. coli* tests annually, and such establishments slaughtering more than one species need not test both. These changes will significantly reduce the cost impact of mandatory testing for small establishments, while providing adequate and useful information to verify process control.

In addition to requiring testing for generic *E. coli* by slaughter establishments at a frequency relative to the establishment's production volume, *Salmonella* testing will be conducted by FSIS.

''Minor species,'' such as sheep, goats, equines, ducks, geese, and guineas, are not being addressed at this time because the Agency is addressing first the most commonly consumed foods under its jurisdiction. FSIS intends to address how best to gather data on and develop testing requirements and performance criteria and standards for these other food animals at a future date.

Legal Authority for Testing Requirement

Several commenters have questioned FSIS's legal authority for the proposed microbiological testing program. These comments are still relevant despite the differences between the proposed and final rules for microbiological testing.

The major change in the final rule is that FSIS is not adopting the proposed *Salmonella* testing regimen. As proposed, results of a series of establishment-conducted *Salmonella* tests would have been used to accomplish two goals: to verify process control and to enforce the prevalence targets for pathogens in raw products. Instead, FSIS is promulgating separate provisions to address these two regulatory goals. The first provision requires that slaughter establishments test carcasses for *E. coli* so that the effectiveness of the establishment's sanitation and process control measures can be assessed in an objective, uniform manner. The second provision sets a pathogen reduction performance standard to bring about reductions in the prevalence of *Salmonella* on raw meat and poultry products. This standard will be enforced by an FSIS-conducted testing program, and will require establishments with prevalence of *Salmonella* above the standard to change their operations to meet that standard. Failure by an establishment to achieve the standard could result in Agency sanctions, as discussed above. This standard will also encourage innovation to reduce pathogens throughout the industry.

One commenter argues that, because this regulatory strategy is precedent-setting, FSIS has a greater than usual burden of articulating the legal basis for it. This commenter notes that the testing regulation does not rely on a finding that the presence of the targeted organisms causes specific lots of product to become adulterated, as is the case with *E. coli* O157:H7 in ground beef. This commenter then argues that FSIS is relying upon a vague ''sanitation theory'' as its legal basis, and that the Agency has a greater duty to articulate its legal basis when new regulations impose new kinds of costs, like mandatory *E. coli* testing, or when the Agency is establishing a new regulatory policy.

This commenter believes that FSIS reliance on a ''sanitation theory'' is legally flawed because, if the Agency is unable to tell establishments how to correct a failure to meet the established targets, it cannot legally require microorganism testing, or impose sanctions for failure to meet established standards.

FSIS has ample statutory authority under the FMIA and PPIA to promulgate these microbiological testing provisions. The meat and poultry inspection statutes mandate Federal regulatory oversight of unusual intensity and comprehensiveness, and they provide the Secretary broad rulemaking authorities to implement them. The primary goal of the statutes is to prevent adulterated or misbranded meat and poultry products from entering into commerce by inspecting meat and poultry products and the establishments that produce them before the products are introduced into commerce. Such inspections are supplemented by compliance actions to remove adulterated or misbranded products from commerce and to apply appropriate sanctions against violators of the law. FSIS regulations under the FMIA and PPIA may be divided into two categories: (1) regulations prescribing the conditions under which, and the manner in which, mandatory inspections are conducted; and (2) regulations directed more broadly at preventing adulteration or misbranding of products, preparation of products in violation of the law, and sale of such products in commerce.

These two regulatory categories are interrelated. The broader category is similar to regulations imposed on foods generally by the FDA under the Federal Food, Drug, and Cosmetic Act. However, FSIS authorities also require compliance with the inspection provisions of the acts and regulations by anyone slaughtering poultry or livestock, or preparing poultry products, or meat or meat food products for use as human food. Thus, the requirements that establishments must meet to obtain inspection and to have products marked ''inspected and passed'' comprise a unique statutory scheme which provides the Secretary with broad rulemaking authorities.

From their inception, the meat and poultry inspection laws have recognized that sanitary conditions in establishments are critical to the safety and wholesomeness of the products being produced. Any product found to have been ''prepared, packed, or held under insanitary conditions whereby it may have become contaminated with filth, or whereby it may have been rendered injurious to health'' is adulterated. No product will be granted inspection or marked ''inspected and passed'' unless the sanitary conditions and practices required by the Secretary are maintained.

It is important to distinguish the statutorily required finding that a product is not adulterated from the absence of a finding that it is adulterated. Only products found not to be adulterated may be marked ''inspected and passed.'' Even if the evidence does not compel an inspector to find that a product is adulterated, it, nonetheless, may be enough to prevent him from finding that it is not adulterated. This means that products may not be distributed for food use without the affirmative determination that they are not adulterated. Products as to which such an affirmative determination has not been made must be retained at the establishment pending such determination. They are being detained because they have not been inspected and passed, not because they have been found to be adulterated.

Thus, FSIS clearly has the authority to require that establishments slaughtering livestock or poultry conduct and record tests for *E. coli* on carcasses to measure how well contamination is being avoided. These tests provide information by which establishments may evaluate and ensure the effectiveness of their sanitary procedures and related process controls in preventing product contamination during slaughter and dressing.

Although *E. coli* testing will not be used to determine the disposition of inspected products, it will be an effective indicator of the presence of fecal contamination that is not visible and therefore not detectable by traditional inspection methods. It will also provide FSIS with information necessary to determine how best to conduct inspection to ensure that product is not being adulterated.

Similarly, FSIS has clear authority to establish a *Salmonella* standard for producers of raw meat and poultry to reduce the public's exposure to *Salmonella* and associated pathogens from inspected meat and poultry products. The *Salmonella* standard, like the criteria for *E. coli* on carcasses, is based on the national baseline prevalence of the bacteria for the product of concern. However, unlike the *E. coli* criteria, which are, in essence, guidelines, the *Salmonella* standard must be met. Compliance will be determined by Agency testing.

FSIS is continuing its policy of permitting raw meat and poultry products to be marked and labeled ''inspected and passed,'' despite the known or suspected presence of some pathogenic bacteria. FSIS recognizes that currently there is no available technology (with the possible exception of irradiation) to ensure that raw product bears no pathogenic microorganisms.

However, there is overwhelming evidence that raw meat and poultry products are frequently contaminated with pathogens and expose consumers to avoidable and unacceptable risks of foodborne illness. FSIS's statutory mandate to protect consumers from adulterated product is not limited to actions associated with inspection. The Secretary may also regulate how meat and poultry products are stored and handled by anyone who buys, sells, freezes, stores, transports, or imports them, to ensure they are not misbranded or adulterated when delivered to the consumer.

The new pathogen reduction standards for *Salmonella* are necessary to establish that raw product is being produced under sanitary conditions, has not been prepared, packed or held under insanitary conditions, and is not for any other reason unsound, unhealthful, unwholesome, or otherwise unfit for human food.

The fact that the new performance standards and guidelines do not specify how the *E. coli* process control verification performance criteria or the *Salmonella* pathogen reduction standard must be met does not undercut the reasonableness or the legal basis of either testing program. Process control and the production of product that is not adulterated is the responsibility of the establishment, not the government. The Agency is responsible for establishing and enforcing reasonable standards; it intends to give the industry the maximum flexibility to decide how best to meet such standards. It does not intend to regulate or prescribe how the standards are to be met. FSIS will provide guidance and assistance to the industry, especially small businesses. But it is not legally obliged to provide technical services to establishments in finding the most efficient and effective way to operate within the *E. coli* criteria and to meet the *Salmonella* reduction standard.

In summary, FSIS has concluded that the *E. coli* testing program and the *Salmonella* reduction standard are fully supported by the FMIA and PPIA.

Performance Standards for Process Control

A related comment asserted that FSIS's proposed *Salmonella* standard was not a standard at all, but instead was merely an unenforceable criterion because its violation would not alone support seizure or condemnation of products. FSIS agrees with the principle that a regulatory standard should be enforceable, but does not agree that a regulatory ''standard'' must be limited to product-specific requirements, or to enforcement by seizure or condemnation of products. The Agency acknowledges that historically it has used the term ''standard'' normally to refer to regulations concerning particular products, e.g., standards of identity regulations, but notes that current government-wide regulatory reform efforts stress the use of ''performance standards'' to describe the desired focus of government regulations generally. FSIS intends now to issue regulations consistent with the notion behind ''performance standards,'' that to the extent possible regulations should tell regulated entities what they must achieve to comply with the law, while providing maximum flexibility regarding how to achieve the standard. Thus, FSIS agrees that one test of a ''standard'' might be that violation of that requirement alone supports some sort of regulatory sanction, but does not agree that ''standards'' should be limited to product-specific regulations or to enforcement actions directed at specific products. The FMIA and PPIA do not limit the Agency to product-specific regulations and enforcement activities, and for reasons fully discussed earlier in this preamble, the Agency has concluded that standards directed at processes are, at this time, the only practical way in which to effectively address the hazard presented by microbiological pathogens on raw meat and poultry products.

Basis for Target Levels

Some commenters questioned the validity of microbial target levels established by FSIS, while others supported FSIS national baseline studies as an effective way to evaluate industry performance. After careful review, the Agency considers it reasonable and appropriate to use the distribution of results observed for each animal species in the FSIS baseline surveys as the basis for both the *E. coli* criteria and the pathogen reduction performance standard for *Salmonella*. These are currently the best available data on the nationwide prevalence and level of microbial contamination of raw meat and poultry products. The data demonstrate that the *E. coli* process control verification criteria and the *Salmonella* pathogen reduction standard are being achieved by many establishments with today's technology and therefore are achievable by all establishments.

FSIS Nationwide Microbiological Baseline Data Collection Programs and its Nationwide Microbiological Surveys provide similar data, but the

''Programs'' generally involve more extensive sampling over a longer period, generally 12 months, than the ''Surveys'', which are generally limited to 6 months of data collection. They both have provided data for an ongoing microbial profile of carcasses and other raw meat and poultry products for selected microorganisms or groups of microorganisms of various degrees of public health concern of value as indicators of general hygiene or process control.

As explained above, FSIS plans to revise the performance criteria and standards as more current baseline data become available from future baseline surveys, through establishment *E. coli* testing, through FSIS *Salmonella* testing, or from other FSIS testing that may be appropriate for establishing criteria and standards.

Although the majority of commenters focused on the issues mentioned above, a number of others addressed various aspects of the proposed rule such as microbial testing methodology, the concept of end product testing, the role of FSIS personnel in test verification, enforcement actions for non-compliance, and laboratory qualifications.

Methodology for Meeting Targets

Some commenters raised objections to use of the ''moving sum'' statistical procedure for determining when microbial testing results are within the process control. Moving sum procedures are recognized in the field of statistical quality control. The American National Standard ''Guide for Quality Control Charts'' [11] identifies two principal uses of such charts: assisting judgment as to whether a state of control exists and attaining and maintaining control. In order to judge whether a state of control exists, operators must analyze ''collectively an accumulation of quality data.'' In the proposed regulation FSIS took this view of the purpose of the moving sum procedure: establishments would need to verify that a state of control exists with respect to the interim target set by the Agency. FSIS did not claim, however, that the procedure would be useful for the second purpose, attaining and maintaining control. That requires more timely and probably more intense monitoring of process parameters at CCP's.

The proposed approach to use testing to measure process control was designed to inform establishments how they are currently operating with respect to the relevant target, and to help them track progress toward meeting that target. A simple plot of the moving sum chart would give them sufficient feedback for this purpose.

Some commenters recommended that the moving window verification program should use a 90% probability criteria, rather than 80%, to reduce the possibility of the testing procedure erroneously identifying an establishment as not meeting the pathogen target. The Agency notes that the moving sum procedure was designed to measure effectiveness of process control with respect to an interim performance standard (called a target in the proposal) based on current industry performance (as determined by a baseline study). This measure was intended to be the first step in holding establishments accountable for meeting acceptable levels of performance. As such, the Agency wanted to be able to readily identify establishments operating above the target and wanted to provide an incentive for establishments to produce at levels better than (below) the target. Giving establishments producing at the target only an 80% chance of passing was expected to promote this. Giving establishments producing at the target a higher chance of passing (e.g., 95%) would reduce both the incentive to do better and the ability to detect establishments above the target.

Sample Size

Others specifically addressed the proposed sample size, recommending that the same number of samples be used for all species. Not all species have the same risks of failure, in part because of the varied incidence of pathogens, as was determined in FSIS's baseline surveys. The proposed sampling rate was the same for all establishments, one per day. Thus the sampling was the same for all establishments, only the rules for interpreting results were different. The number of results included in the window differed by product class because the target percents positive differed by product class. It was necessary to employ different-sized windows to maintain a fixed probability of passing (80%) at the target for all product classes while choosing as short a window as possible and allowing at least one positive in the window.

Testing Methodology

Other commenters asked for clarification on testing methodology. Some remarked that using a sponge or swab method to sample carcasses is preferable to the proposed excision method because the proposed method is time consuming, cumbersome, and expensive, and it may mutilate and contaminate the carcass. The Agency agrees and has elected to use non-destructive sampling methods.

Others asked for clarification of enforcement actions that would result from an establishment not meeting its microbial targets. How the rule will be enforced is addressed above.

Role of Inspectors

Still others asked about the role of inspection personnel in verification testing and expressed concern about the amount and type of training inspection personnel would receive to analyze test results.

The final rule makes slaughter process control verification testing (*E. coli*) the responsibility of establishments slaughtering livestock or poultry, although FSIS inspectors may also collect samples for *E. coli* testing as needed to carry out their oversight responsibilities. FSIS personnel sampling carcasses for *Salmonella* to ensure that establishments are meeting the pathogen reduction performance standard will send the samples to an Agency laboratory for analysis. FSIS personnel have been involved in collection of samples for FSIS's baseline surveys, and have been trained and are highly qualified to collect samples for this regulatory program. Inspectors will work with other program officials, including scientifically trained experts, in analyzing test results and making appropriate regulatory decisions. Inspectors will receive training to prepare them for their role in this process.

Laboratories

Some commenters asked for clarification regarding qualifications for in-house and outside laboratories. They stated that laboratories should be required to use standardized techniques for analyzing test results.

The microbiological test method used by the establishments must be AOAC validated techniques, or other methods validated by a scientific body in collaborated trials against the three tube most probable number (MPN) method and agreeing with the 95 percent upper and lower confidence interval, as discussed in the *E. coli* Methods Section. Establishments are responsible for the accuracy of the tests of their samples. If the samples are not analyzed by the establishment, the establishment, perhaps in concert with a trade association, should ensure that the laboratory it chooses is reputable and

[11] American National Standard ANSI Z1.1–1985. ''Guide for Quality Control Charts.'' American Society for Quality Control. Milwaukee, WI.

adheres to a Quality Control/Quality Assurance Program.

Alternative Sampling Under HACCP

Other commenters stated that the proposed microbial testing system does not reward very clean establishments by granting reasonable reductions in testing when significant periods are pathogen free. They recommended that once a facility has implemented its HACCP program, the required frequency for mandatory microbial testing should be reduced or eliminated altogether.

In this final rule, a slaughter establishment successfully operating under a validated HACCP plan may reduce the specified sampling frequency as long as the alternative sampling plan is an integral part of the establishment's verification procedures for its HACCP system. FSIS does, however, reserve the right to determine that the alternative frequency is inadequate to verify the effectiveness of the establishment's process controls. In that case, FSIS would notify the establishment in writing of its finding, advise that the frequency specified in the regulation must be maintained, and specify any conditions an acceptable alternative frequency would have to meet to be found acceptable to the Agency.

Relationship to HACCP

Finally, some commenters stated that the proposed end-product testing is inconsistent with HACCP principles and that establishments should decide for themselves through hazard analysis whether testing is needed and at what frequency. Others objected to the concept of end-product testing because it only measures effectiveness over a small percentage of a production lot and has limited value in measuring the overall success of a HACCP plan. Still others concluded that placing an emphasis on end-product testing gives consumers a false sense of confidence about the safety of meat and poultry products. A few commenters were concerned about product liability due to product recalls stemming from test results.

The objective of the generic *E. coli* testing is to verify that process control has been maintained by the establishment throughout the slaughter and dressing process and that resultant carcasses are produced hygienically. If processes are under control for *E. coli*, the potential presence of enteric pathogens will be reduced. End-product verification testing of this kind is a well recognized component of HACCP-based process control.[12] The goal of FSIS's *Salmonella* testing program is to verify that pathogen reduction performance meets current standards in each establishment and thereby effect a nationwide reduction in the incidence of that organism and other enteric pathogens on raw meat and poultry products. The end of production is the only point that reflects all steps in the production process and, ultimately, all elements of the HACCP system. The seventh HACCP principle is verification that the HACCP system is working; one cannot verify that HACCP is working in slaughter establishments (controlling fecal contamination/pathogens) without some end-product testing, so end-product testing is not inconsistent with HACCP principles. The two different kinds of testing programs: (1) *E. coli* testing by establishments to verify control of fecal contamination; and (2) *Salmonella* testing by FSIS to hold establishments accountable for meeting pathogen performance standards, are both forms of end-product testing that FSIS considers consistent with HACCP.

End-product testing as part of an overall system of HACCP-based process control and performance standards should not give consumers a false sense of confidence about the safety of meat and poultry products. FSIS recognizes that limited end-product testing alone provides little assurance of safety, but, as part of a process control system, appropriate end-product testing brings rigor and accountability to the system and should appropriately increase consumer confidence in the safety of products. By requiring HACCP, FSIS is in fact moving away from sole reliance on end-product assessments for lot acceptance, an approach that is the opposite of the HACCP system approach to food safety. FSIS recognizes that producing safe food requires preventing hazards throughout the process rather than relying solely on end-product testing to ensure safety. Establishments' liability to civil lawsuits should not be adversely affected by this rule precisely because it is an establishment's process, not individual lots of product, that is being assessed, for inspection purposes, on the basis of this testing.

V. Other Issues and Initiatives

Antimicrobial Treatments

FSIS proposed that all slaughter establishments apply at least one antimicrobial treatment or other approved intervention to livestock and poultry carcasses prior to the chilling or cooling operation. Proposed treatment methods included chlorine compounds, hot water, and any antimicrobial compound previously approved by FSIS and listed in the meat or poultry regulations. Product prepared for export to countries that restrict or prohibit the use of antimicrobial treatments would have been exempted from this requirement upon application to the Administrator.

While most commenters generally agreed that antimicrobial treatments could play an important role in reducing contamination with pathogenic microorganisms in slaughter establishments, many commenters opposed mandating such treatments. The commenters argued that mandating the use of antimicrobial treatments in slaughter operations would not be consistent with the HACCP philosophy and the overall shift by FSIS to greater reliance on performance standards.

FSIS agrees with these commenters and has decided not to mandate the use of antimicrobial treatments in slaughter establishments. FSIS continues to believe that slaughter establishments will find that these treatments can play a useful role in reducing pathogens and improving the safety of meat and poultry products. Rather than mandating specific antimicrobial treatments, FSIS will rely on other requirements in this final rule to ensure that slaughter establishments are achieving an acceptable level of performance in controlling and reducing harmful bacteria on raw product.

The principle of using antimicrobial treatments as an intervention to control pathogens on meat and poultry carcasses was strongly endorsed by most commenters. However, few agreed that the treatments should be mandatory. A majority of commenters recommended that antimicrobial treatments be voluntary interventions. Establishments would decide if antimicrobial interventions were needed to control specific hazards at one or more critical control points in the slaughter process.

Similarly, a number of commenters tied antimicrobial treatments to microbial testing. They argued that carcass treatments should not be required in establishments that consistently meet or exceed performance standards for microbial contamination.

Commenters said FSIS should focus its regulatory efforts on measurable, attainable goals and not on prescriptive requirements for particular processing steps. Several commenters emphasized the need for ''whole system'' interventions instead of single

[12] National Advisory Committee on Microbiological Criteria for Foods. 1994. ''Hazard Analysis and Critical Control Point Systems.'' FSIS, USDA.

techniques such as antimicrobial treatments. They said these interventions work best when they are tailored to species and product hazards, individual establishment configurations, and processing methods. Furthermore, some commenters cited a danger that establishments and inspection personnel would focus on the treatment function itself instead of broader food safety goals.

FSIS generally agrees with these comments. FSIS has concluded that its food safety goals can be achieved more effectively and more efficiently by requiring HACCP-based process control combined with appropriate performance criteria and standards than by mandating specific interventions, such as antimicrobial treatments. New technological interventions will play a significant role in reducing the risk of foodborne illness and should be adopted as part of an overall system of HACCP-based process control. FSIS expects that such treatments may be used by establishments to meet the process control performance criteria and pathogen reduction performance standards FSIS is adopting in this final rule.

A few commenters opposed mandating antimicrobial treatments because they believed their use would allow for correction of sloppy carcass dressing procedures. These commenters argued that antimicrobial treatments, whether mandatory or voluntary, emphasize post-contamination clean-up rather than prevention.

FSIS also received many comments which addressed the four proposed antimicrobial treatment methods. Many commenters stated that FSIS should not restrict establishments to these particular antimicrobial interventions.

A variety of commenters addressed technology issues concerning the proposed treatment methods themselves. Many said that too few studies have been conducted to show which interventions are most effective and efficient for specific pathogens associated with particular species in individual slaughter establishment configurations. Some argued that the studies FSIS cited in its proposal were too narrow and did not adequately demonstrate effectiveness. They said additional studies were needed to determine the practicality, efficacy, and expense of various antimicrobial treatments in commercial settings. In addition, some commenters were concerned that insufficient research was available on whether the elimination of competitive micro flora would allow uninhibited growth of pathogenic bacteria.

Individual antimicrobial techniques were also criticized. For example, hot water sprays were said to pose dangers to establishment personnel applying the treatments at temperatures necessary for effectiveness. Hot water sprays raise carcass temperatures with consequent melting of surface fat in some species, contribute to quality defects such as change in product color and partial cooking, and result in higher energy costs. Commenters recognized, however, that hot water was the only currently available nonchemical intervention that could be implemented at comparatively low cost. Other commenters criticized lactic, acetic, and citric acid solution sprays because they have low effectiveness as a treatment against *E. coli* O157:H7. The possible carcinogenic effects of chlorine were also mentioned, as were concerns about water reuse and possible environmental effects from spray effluents.

Commenters also suggested a variety of alternative antimicrobial interventions that could be used by establishments. These interventions included irradiation and radiation-emitting electronic devices such as x-rays and linear accelerators; high-energy ultraviolet light; pulsed light, sonic, infrasonic, and ultrasonic emitters; chemicals such as copper sulfate in the pentahydrate form, chlorine dioxide, and hydrogen peroxide; procedures such as pre-evisceration washes, water curtains, counter current or counter flow scalders, the *Peroxi bicarb* process, automatic warm fresh water rinses, ozonated water, steam pasteurization, steam vacuuming, hot wax dipping, and singeing.

A number of commenters also suggested that FSIS establish protocols to evaluate various forms of antimicrobial procedures and treatments. FSIS could then publish a regularly updated list of acceptable treatments and provide guidelines for their use in a commercial setting. It was argued that this process would give establishments the flexibility to implement any interventions they deem necessary. Others said FSIS should set up a predetermined protocol for antimicrobial agents or an expedited review process for new technologies.

FSIS agrees that issues of effectiveness, product and worker safety, product quality, interference with inspection, and environmental impact can be raised about most food safety interventions, including antimicrobial treatments. Therefore, to facilitate industry development of new technologies, FSIS has established a process that will facilitate this development.

On May 25, 1995, FSIS published a notice in the Federal Register (60 FR 27714) that presented guidelines for preparing and submitting experimental protocols to FSIS for use by establishments wishing to conduct trials of new technologies and procedures. In that notice, FSIS confirmed its long-standing commitment to foster innovative technologies and procedures that more effectively protect meat and poultry products from microbiological and other hazards. Specifically, FSIS encouraged the development of efficacious, practical and manageable technologies and procedures by establishments.

FSIS also published guidelines (FSIS Directive 10,700.1) for establishments to use for submitting written proposals and protocols to FSIS for approval to conduct experiments. Agency approval is required in cases where the intended technology, procedure or process may affect (1) product safety or lead to economic adulteration, (2) worker safety, (3) environmental safety, or (4) inspection procedures.

Similarly, FSIS published a proposed rule in the Federal Register (60 FR 67459; December 29, 1995) that will facilitate the review and approval of substances intended for use in or on meat and poultry products. Under the proposed procedures, FSIS would no longer issue its own regulations listing substances it finds suitable for use in meat and poultry products. Instead, FDA's regulations would specify whether a substance approved for use in foods under the Federal Food, Drug, and Cosmetic Act may be used in or on meat or poultry products.

Many commenters stated that antimicrobial interventions should be permitted at any stage in the slaughter process: live animal, pre-hide removal, pre- or post-carcass wash, pre- or post-chill, or just prior to fabrication.

Some commenters argued that the proposed treatments would seriously compromise the Kosher ritual salting process, while others said the interventions would conflict with Confucian and Buddhist-style poultry prepared for religious rites.

A number of commenters questioned the relationship between FSIS's policy on zero tolerance for fecal contamination and its antimicrobial treatment proposal. In particular, they were concerned about where in the process zero tolerance would be measured.

Finally, several commenters requested a practical definition of ''feces'' as a means to resolve disagreements between inspectors and establishment personnel about trimming contamination.

Cooling and Chilling Requirements for Raw Meat and Poultry

FSIS proposed that establishments slaughtering livestock be required to chill carcass surfaces and hot-boned meat to 50°F (10°C) within 5 hours and then to 40°F (4.4°C) within 24 hours of slaughter or meat and bone separation. Chilling of meat products such as liver and cheek meat would have been required to begin within one hour of removal from a carcass. The proposed rule also would have changed existing poultry chilling requirements (§ 381.66) to be comparable with those proposed for meat. Chilling would have been required unless the raw product was going directly from slaughter to heat processing.

The proposal also would have required that establishments maintain raw meat and poultry products at an internal temperature of 40°F or below while in the establishment and before release into commerce. Raw products not chilled in accordance with the requirements would have required further processing to kill pathogens or would be condemned.

Lastly, the proposal would have required each establishment handling raw product to have a written plan for temperature controls and monitoring and make monitoring records available to FSIS upon request.

The proposed rule was based on good manufacturing practices generally prevalent in the industry. FSIS's position was that temperature controls, which are known to prevent bacterial growth, are an accepted part of current industry practices, are already required by regulation for poultry carcasses, and should be mandated for all raw product to minimize the possibility that raw products leaving official establishments bear significant levels of pathogenic microorganisms.

Commenters generally supported the concept that establishments should be required to chill raw product as a means of minimizing the growth of harmful bacteria. Some commenters supported the time and temperature requirements as proposed. Others argued that the specific time and temperature combinations in the proposed rule were unduly restrictive and unworkable. A number of commenters advocated ''more realistic'' cooling requirements that take into consideration establishment and product variety, different processing operations, and diverse shipping and receiving operations. These commenters supported the use of independent ''process authorities'' to advise establishments on cooling carcasses and other raw products. Some suggested that the proposed chilling requirements should be recast as guidelines.

Many commenters questioned the need for any regulatory requirements for chilling and asserted that it was conceptually at odds with the proposed HACCP provisions. They recommended that FSIS defer any regulation on chilling because establishments would have to address chilling as part of their HACCP plans.

Some commenters raised concerns about the scientific basis of the proposed time and temperature requirements. They asserted that the cooling requirements would not result in any demonstrable improvement in food safety because they were not based on scientifically valid data. A number of commenters said that the proposed time and temperature requirements were simply not achievable by the beef industry due to the large size of beef carcasses. Also, they said that these carcass cooling requirements might change meat quality attributes such as product texture and palatability.

Many commenters asserted that FSIS's regulatory focus and the economic burdens are placed entirely on establishments when, these commenters argue, a large proportion of foodborne illnesses are caused by temperature abuse and other mishandling of raw products after they leave the establishment.

Many commenters expressed concern about risks to employees' health that could result from employees working continuously in a colder environment. They cited worker safety studies showing many human physical ailments are created or aggravated by cold ambient temperatures. Worker safety was also cited as an issue on the grounds that the difficulty of handling and cutting meat at such cold temperatures increases the potential for accidents and injuries.

Some commenters noted that FSIS did not specify how the equivalence of alternative procedures could be established. In addition, some suggested specific alternative methodologies they thought would provide equivalent procedures, such as cooling with dry ice, CO_2, or nitrogen. Others either did not approve of using any alternative chilling process or wanted them to be included in the final rule.

Some commenters questioned the rationale for proposing identical requirements for meat and poultry. They said that using the same set of requirements for all species fails to take into account the variation in carcass size.

Commenters from small businesses said they did not have the cooling capacity to comply with the proposed requirements, and that the cost of expanding facilities, obtaining the necessary refrigeration equipment, and retaining quantities of carcasses long enough to chill them to 40°F before shipping was prohibitive.

Other commenters said the time and temperature requirements conflicted with religious, cultural, and ethnic practices. For example, there are ethnic markets for ''hot pork,'' whereby hogs are slaughtered and delivered directly to customers for preparation and consumption with little or no intervening chilling. A similar process is used with lamb, goat, and beef for Moslem customers. Some commenters asserted that the proposed requirements also conflict with and preclude the Kosher process of ritual salting of poultry.

Commenters also were concerned that carcasses that are processed in one establishment and shipped to another establishment for immediate further processing or directly to an off-site cooling facility would have to meet carcass cooling requirements.

Questions were raised about the disposition of products that did not meet temperature requirements. Concern was expressed about the possible condemnation of large quantities of product based on slight deviations from temperature requirements that would not by themselves jeopardize food safety.

A number of commenters addressed the proposed shipping temperature requirements. Many asserted that temperature variation during shipping is a significant problem. Several commenters asked about their liability for product after it has left their custody and is found later, e.g., at a warehouse or retail establishment, to have been subjected to temperature abuse or other mishandling. Related comments stated that time and temperature controls were important at all stages of food production, especially at retail, and should be more of a focus of FSIS's regulatory oversight.

A few commenters expressed concern about the burden of preparing a written plan and the proposed recordkeeping requirements.

After reviewing the comments, FSIS agrees that the proposed regulations on this issue should not be promulgated at this time. FSIS is persuaded that the complexity and variety of acceptable chilling practices now in use make the proposed prescriptive time and temperature requirements unduly burdensome and impractical. FSIS

intends to seek an alternative that will not conflict with Kosher or other religious, cultural, or ethnic practices that do not present food safety hazards to consumers. FSIS has concluded that its food safety objectives may be achieved more effectively by regulatory means other than those proposed.

Nevertheless, FSIS continues to believe that prompt, thorough chilling of carcasses and raw meat and poultry products by slaughtering establishments is necessary to minimize consumers' exposure to pathogenic microorganisms. Cooling of carcasses is generally acknowledged to be an essential component of any establishment's processing controls for safe food production.

FSIS agrees with those commenters who stated that keeping raw products cooled after they leave the establishment, during transportation, storage, distribution, and sale to consumers, is essential if growth of pathogenic microorganisms on raw products is to be prevented. This is consistent with FSIS's farm-to-table food safety strategy.

Instead, FSIS believes that the best way to regulate in this area would be by having as a performance standard a maximum temperature for products being shipped into commerce, and at which raw products in commerce must be maintained. This standard would be applicable to all persons who handle such product before the product reaches the consumer. FSIS believes that there are at least two possible temperatures for this purpose.

A mandatory temperature of 41°F would provide a large margin of safety against the multiplication of pathogenic bacteria, which generally will not multiply at temperatures below 50°F. It is similar to the maximum temperature of 40°F originally proposed by FSIS and recommended in Agriculture Handbook No. 412. It is also the same temperature as that specified in the Food and Drug Administration's current model Food Code which is offered for adoption by States and other government entities with jurisdiction over food service, retail food stores and food vending machine operations.

Alternatively, a temperature of 45°F would still provide a margin of safety and also is that required in FDA's current Good Manufacturing Regulations for refrigerated foods generally. It also would comport with the temperature established for raw product in commerce by the European Union. That temperature is increasingly accepted as a standard for raw product storage and transportation by other countries and appears to be an emerging standard for international trade.

FSIS could supplement the shipping/storage temperature regulations with guidelines, including recommended criteria for microorganisms, that would provide purchasers and vendors in commerce additional means by which to determine whether products bear a level of bacteria indicative of temperature abuse and, therefore, are likely to bear levels of pathogenic microorganisms that could be associated with foodborne illnesses.

FSIS has concluded that development of such a performance standard requires that it obtain additional information and engage in further rulemaking. Therefore, FSIS will extend and expand this rulemaking proceeding on the issue of cooling raw meat and poultry products. FSIS will consider alternatives to the specific time and temperature requirements it proposed, including performance standards governing cooling during transportation and storage of raw meat and poultry, probably in the form of a maximum temperature for transporting and holding such product.

As the next step in its proceedings on this topic, FSIS plans to hold a public conference to gather further information on the many technical and practical issues raised in the comments as well as on possible alternatives to the proposal which will be outlined in the Agency's announcement of the conference.

International Trade

The inspection statutes require that meat and poultry products imported into the United States be produced under an inspection system equivalent to the U.S. inspection system.

A large number of commenters requested that FSIS clarify how it will determine the ''equivalence'' of foreign inspection systems following HACCP implementation. Commenters questioned exactly how FSIS will determine foreign system equivalency regarding HACCP systems. Further, some commenters asserted that requiring foreign equivalency with the U.S. HACCP system could create problems in foreign trade if HACCP implementation in the United States causes some foreign inspection programs previously designated ''equivalent'' to lose that designation.

Foreign countries with establishments exporting to the United States must establish inspection system requirements ''equivalent to'' U.S. requirements. This means that all foreign meat and poultry establishments that export meat to the United States must operate HACCP systems or process control systems ''equivalent to'' HACCP. They must also adopt equivalent performance standards.

The components of FSIS's current import inspection system will not change. As part of the evaluation of the laws, policies, and administration of the inspection system of any foreign country eligible to export meat or poultry products into the United States, FSIS will assess the status of HACCP—or equivalent process control system-implementation in that country. This assessment will include on-site reviews of individual establishments, laboratories, and other facilities within the foreign system. The ''equivalency'' of foreign inspection will be determined at this stage.

Further, when these regulations are implemented, the import inspection system will continue to include port-of-entry inspection by FSIS inspectors to verify the effectiveness of foreign inspection systems. All countries exporting raw products to the United States must develop and implement performance standards that are equivalent to the pathogen reduction performance standards for *Salmonella*. They must also be able to demonstrate that they have systems in place to assure compliance with the standards.

As of January 1, 1995, 1,395 establishments in 36 countries were certified to export meat or poultry products to the United States. Canada, with 599 establishments; Denmark, with 125; Australia, with 111 establishments; and New Zealand, with 94 establishments, accounted for two-thirds of those, which were collectively the source of 85 percent of the 2.6 billion pounds of product imported into the United States during 1994. Canada, Denmark, Australia, and New Zealand are currently developing HACCP systems.

Most of the comments concerning the impact on exports dealt with the proposed requirement for antimicrobial treatment of U.S. product and the proposed exemption for exported product. That proposed requirement raised particular concerns because the European Union member states and Canada restrict the use of certain antimicrobials on meat and poultry carcasses.

A number of commenters cited the fact that a proposed exemption would be ineffective because establishments cannot segregate treated product from untreated product. Commenters said this occurs because antimicrobial treatments are performed on whole carcasses, while most meat and poultry is exported in parts. This condition, the commenters argued, would cause

significant operational difficulty to establishments that were required to separate product that had and had not been treated, as well as inventory management problems. This requirement might also result in an artificial trade barrier with countries such as Canada, which restrict use of certain antimicrobial treatments. Suggestions were made that FSIS should obtain Codex support and acceptance for the proposed antimicrobial interventions as a means to overcome international objections to their use. The Agency's decision not to mandate antimicrobial treatments largely negates these concerns. FSIS will continue to work within Codex and in its bilateral relations with major trading partners to ensure that the scientific basis for food safety practices in the U.S. are understood and accepted.

The final rule will affect U.S. exports only if an establishment has difficulty meeting the new microbial performance standards without using an antimicrobial treatment. FSIS is aware that alternative technologies now available can facilitate international trade. For example, public comments indicated that trisodium phosphate is approved for use in Canada and the United Kingdom, and is being considered by the European Union, Australia, and New Zealand. Steam vacuum systems constitute an improved technology for establishments exporting beef and pork products.

Recordkeeping and Record Retention

FSIS notes that recordkeeping requirements and record retention periods for sanitation SOP's, microbiological testing, and HACCP are found in 416.12, 310.25(b)(4), and 381.94(b)(4), and 417.5, respectively. The proposed amendments to sections 320.1, 320.3, 381.175, and 381.177 were intended to continue FSIS' practice of cross-referencing recordkeeping requirements in §§ 320.1, 320.3, 381.175, and 381.177. FSIS has determined that it is unnecessary to amend these sections at this time, especially in view of its ongoing efforts to simplify, consolidate, and streamline the meat and poultry inspection regulations.

Finished Product Standards for Poultry Carcasses

FSIS proposed to remove the feces nonconformance specification from the poultry finished product standards regulations (§ 381.76, Table 1). That change in the poultry products inspection regulations is being effected not in this final rule but in the forthcoming final rule, ''Enhanced Poultry Inspection; Revision of Finished Product Standards with Respect to Fecal Contamination,'' Docket No. 94–016F.

VI. Economic Impact Analysis and Executive Orders

Executive Order 12866

This rule has been determined to be economically significant and was reviewed by OMB under Executive Order 12866.

HACCP-based Regulatory Program Produces Net Benefit to Society

FSIS has prepared a Final Regulatory Impact Assessment (FRIA) that evaluates the costs and benefits of a mandatory HACCP-based program for all meat and poultry establishments under inspection. The FRIA concludes that mandating HACCP systems will lead to potential benefits that far exceed industry implementation and operating costs.

The 20-year industry costs of implementing the HACCP-based regulatory program are estimated to be $968 to $1,156 million. The 20-year costs to the government are estimated at $56.5 million. FSIS estimated that the proposed rule would have 20-year costs of $2.2 billion dollars. The costs from the Preliminary Regulatory Impact Analysis (PRIA) are not directly comparable to costs estimated for the final rule. The proposed rule had a larger number of explicit regulatory requirements. The PRIA focused on estimating the predictable costs of meeting those requirements and included an implicit assumption that compliance with the proposed requirements would assure compliance with pathogen reduction objectives. In contrast, the final rule allows for greater flexibility in meeting the pathogen reduction standards, but also outlines a more rigorous enforcement strategy. Thus for the FRIA, it was necessary to develop separate cost estimates for the potential costs of meeting the new pathogen reduction performance standards for *Salmonella*. Modifications incorporated into the final rule have both reduced the total estimated costs and redistributed costs in a way that reduces the relative burden on smaller establishments.

Both the preliminary and final analysis identify a potential public health benefit of $7.13 to $26.59 billion, tied to eliminating the contamination by four pathogens that now occurs in meat and poultry establishments. These four pathogens include the three most common enteric pathogens of animal origin: *Campylobacter jejuni/coli, E. coli* O157:H7, *Salmonella* and one environmental pathogen *Listeria monocytogenes*. The potential benefit estimate is tied to the minimization of risk from the 90 percent of these pathogens that are estimated to contaminate meat and poultry during slaughter and dressing procedures. The remaining 10 percent of contamination is estimated to occur after the product leaves the manufacturing sector. The link between regulatory effectiveness, where effectiveness refers to the percentage of pathogens eliminated at the manufacturing stage, and health benefits is the assumption that a reduction in pathogens leads to a proportional reduction in foodborne illness. The high and low range for potential benefits occurs because of the current uncertainty in the estimates of the number of cases of foodborne illness and death attributable to pathogens that enter the meat and poultry supply at the manufacturing stage.

The benefits analysis in the FRIA concludes that there is insufficient knowledge to predict with certainty the effectiveness of the rule, where effectiveness refers to the percentage of pathogens eliminated at the manufacturing stage. Without specific predictions of effectiveness, FSIS has calculated projected health benefits for a range of effectiveness levels. For example, if the HACCP-based program can reduce the four pathogens by 50 percent and that reduction leads to a proportionate reduction in foodborne illness, the projected benefits range from $3.6 to $13.3 billion, which is half the potential benefit estimate of $7.13 to $26.59 billion.

If the low potential benefit estimate is correct, the analysis shows that the new HACCP-based program must reduce pathogens by 15 to 17 percent before benefits outweigh projected costs. If the high estimate is the correct estimate, the new program needs to reduce pathogens by only 4 to 5 percent to generate net societal benefits. While there were a large number of comments relating to the effectiveness estimates in the PRIA, there were no comments that claimed or implied that HACCP would not reduce pathogens at levels necessary to produce net societal benefits. The requirements of the final rule are organized around the following three components:

- The requirement that all inspected establishments develop and implement HACCP programs based on the seven recognized principles of HACCP.
- The requirement that all inspected establishments develop and implement Sanitation SOP's.
- The requirements that all establishments that slaughter cattle, swine, chickens or turkeys implement a microbial sampling

program using *E. coli* (generic) as a measure of control of slaughter and sanitary dressing procedures and that all establishments that slaughter cattle, swine, chickens or turkeys or produce raw ground product from these animals or birds meet new pathogen reduction performance standards for *Salmonella*.

The proposal and final rule can be viewed as two scenarios for implementing a mandatory HACCP-based regulatory program. While it's not possible to compare the benefits of these two options, the FRIA does present a comparison of the costs.

Table 5 summarizes the estimated costs for both the proposal and final rule by individual regulatory component. As mentioned above, the costs are not directly comparable because the regulatory components have changed. Table 5 shows that all costs have been eliminated for the components of time-and-temperature requirements and antimicrobial treatments. However, the discussion of potential costs in the FRIA recognizes that some establishments may use antimicrobial treatments to help meet the pathogen reduction performance standards for *Salmonella*. Other establishments may impose temperature limits to help control *Salmonella* growth.

Table 5 includes the final cost estimate for generic *E. coli* sampling in slaughter establishments under the regulatory component for microbial testing. The costs for required microbial sampling have decreased substantially from the proposal.

In the FRIA, FSIS increased or added a cost estimate for four regulatory components. First, based on comments, FSIS added costs for recurring training to account for the fact that employee turnover will sometimes require establishments to train additional employees. Second, FSIS also added a minimal cost for annual reassessment of HACCP plans, although the Agency believes that reassessment will be negligible for establishments successfully operating HACCP systems. Third, FSIS has increased the estimated cost for HACCP plan development. The estimate for this cost was increased after reviewing public comments and assessing the overall impact on plan development costs of decisions to eliminate time-and-temperature and antimicrobial treatment requirements prior to HACCP implementation. Finally, the Agency recognizes that some establishments will have difficulty meeting the new performance standards for *Salmonella* and that implementing sanitation SOP's and HACCP plans will not always assure sufficient pathogen reduction. The FRIA has developed two scenarios that lead to low and high cost estimates related to potential actions that establishments might undertake. Such actions include both process modifications to reduce pathogens and the implementation of *Salmonella* testing programs to assure compliance with the new performance standards.

As shown in Table 5, the two scenarios developed in the FRIA lead to a range in cost estimates of $55.5 to $243.5 million to comply with the new pathogen reduction standards for *Salmonella*. The FRIA recognizes that the performance criteria for generic *E. coli* also create a set of potential costs for slaughter establishments. A line for these costs is shown in Table 5 along with the entry that these costs were not separately quantified.

As discussed in the FRIA, the anticipated actions to comply with the generic *E. coli* criteria are the same as the anticipated actions to comply with the standards for *Salmonella*. FSIS has concluded that if the low cost scenario for *Salmonella* compliance proves to be more accurate, than the Agency would expect to see some compliance costs for the generic *E. coli* performance criteria. If the high cost scenario is correct, then the compliance actions taken to assure compliance with the *Salmonella* standards should also assure compliance with the generic *E. coli* criteria.

TABLE 5.—COMPARISON OF COSTS—PROPOSAL TO FINAL

[$ Millions—Present value of 20-year costs]

Regulatory component	Proposal	Final
I. Sanitation SOP's	175.9[a]	171.9
II. Time/Temperature Requirements	45.5	0.0
III. Antimicrobial Treatments	51.7	0.0
IV. Micro Testing	1,396.3[b]	174.1
V. Compliance With *Salmonella* Standards	Not Separately Estimated[c]	55.5–243.5
Compliance with generic *E. coli* criteria	Not Applicable	Not Separately Estimated
VI. HACCP		
Plan Development	35.7	54.8
Annual Plan Reassessment	0.0	8.9
Recordkeeping (Recording, Reviewing and Storing Data)	456.4	440.5[d]
Initial Training	24.2	22.7[d]
Recurring Training	0.0	22.1[e]
VII. Additional Overtime	20.9	17.5[d]
Subtotal—Industry Costs	2,206.6	968.0–1,156.0
VIII. FSIS Costs	28.6[f]	56.5
Total	2,235.2	1,024.5–1,212.5

[a] The preliminary analysis included a higher cost estimate for sanitation SOP's ($267.8 million) that resulted because of a programming error. The cost estimate of $175.9 million is based on an effective date of 90 days after publication.

[b] The preliminary analysis was based on the premise that microbial testing would be expanded to cover all meat and poultry processing after HACCP implementation. The proposed rule only required sampling for carcasses and raw ground product. Thus, the cost estimate of $1,396.3 million was higher than the actual cost of the proposed sampling requirements.

[c] The preliminary analysis accounted for some of the cost of complying with the new standards under the regulatory components of micro testing, antimicrobial treatments, and time and temperature requirements.

[d] These costs are slightly different from the proposal because of changes in the implementation schedule.

[e] FSIS added costs for recurring training based on the review of public comments.

[f] Based on current estimates for the cost of training, inspector upgrades, and $0.5 million for annual HACCP verification testing.

Market Failure Justifies Regulation of Pathogens

Since all raw meat and poultry products contain microorganisms that may be pathogens, raw food unavoidably entails some risk to consumers of pathogen-exposure and foodborne illness. The presence and level of this risk cannot be determined by a consumer since pathogens are not visible to the naked eye. The societal impact of this food safety information deficit is a lack of accountability for foodborne illnesses caused by pathogenic microorganisms. Consumers often cannot trace a transitory illness to any particular food or even be certain it was caused by food. Thus, food retailers and restaurateurs are generally not held accountable by their customers for selling pathogen-contaminated products and they, in turn, do not hold their wholesale suppliers accountable either.

This lack of marketplace accountability for foodborne illness means that meat and poultry producers and processors have little incentive to incur extra costs for more than minimal pathogen controls. The widespread lack of information about pathogen sources means that business at every level from farm to final sale can market unsafe products and not suffer legal consequences or a reduced demand for their product.

The science and technology required to reduce meat and poultry pathogens is well established, readily available, and commercially practical. FSIS has concluded that the lack of consumer information about meat and poultry product safety and the absence of adequate incentives for industry to provide more than minimal levels of processing safety represents a market failure requiring Federal regulatory intervention. The present combination of market regulation and industry self-policing has not resolved increasingly apparent problems with meat and poultry pathogens. Documented cases of foodborne illness each year, some of which have resulted in death, represent a public health risk that FSIS has determined to be unacceptable. A comprehensive Federal regulatory program is the only means available to society for lowering foodborne pathogen risks to an acceptable level. FSIS further concludes that a mandatory HACCP regulatory program is the only means to attain this goal.

Regulatory Alternatives

After considering broader regulatory approaches including market incentives and voluntary industry standards, FSIS has determined that effective process control is needed throughout the meat and poultry industry in order to minimize pathogen contamination of food products and lower the risk of subsequent foodborne illness.

FSIS examined the following seven process control approaches before determining that mandatory HACCP was the most effective means for industry to eliminate pathogens in meat and poultry:

- Status quo
- Intensify present inspection
- Voluntary HACCP regulatory program
- Mandatory HACCP regulation with exemption for small businesses
- Mandatory HACCP regulation only for ready-to-eat products
- Modified HACCP—negative records only
- Mandatory HACCP for all establishments

Each of these seven alternatives was assessed using the following five effectiveness factors for process control:

- Controls production safety hazards
- Reduces foodborne illness
- Makes inspection more effective
- Increases consumer confidence
- Provides the opportunity for increased productivity

Only mandatory HACCP for all establishments was determined to meet all five criteria; all of the others were found to be flawed in meeting one or more of the target factors.

The full text of the Final Regulatory Impact Analysis is published as a supplement to this document.

Unfunded Mandates Reform Act

The Unfunded Mandates Reform Act (P.L. 104–4) requires (in Section 202) that agencies prepare an assessment of anticipated costs and benefits before proposing any rule that may result in annual expenditures by State, local, and tribal governments, in the aggregate, or by the private sector, of $100,000,000, (adjusted annually for inflation). The preliminary and final RIA's fulfill this requirement of the Unfunded Mandates Reform Act. FSIS has treated both the proposed rule and this final rule as an economically significant regulatory action, i.e., annual cost to the private sector of more than $100,000,000, under Executive Order 12866 and has prepared a final Regulatory Impact Analysis (RIA) in compliance with the provisions of Executive Order 12866. The final RIA identifies annual recurring private sector costs of from $99.6 to $119.8 million and potential annual public health benefits of $.99 to $3.69 billion.

The Act also requires (in Section 205) that the Agency identify and consider a reasonable number of regulatory alternatives and, from these alternatives, select the least costly, most cost-effective, or least burdensome alternative that achieves the objective of the rule. In the final RIA, FSIS considered several broad regulatory alternatives and selected the one that is both cost-effective and also the least burdensome alternative that achieves the food safety objectives of the rule. FSIS concluded that market incentives will not address the public health risk resulting from microbial pathogens in meat and poultry, primarily because there is rarely feedback to consumers that allows more informed purchase decisions nor is there feedback which would permit consumers who experience a foodborne illness to routinely, and at low cost, seek compensation from responsible parties for losses arising from their foodborne illness. Thus, market solutions would not adequately address the food safety objectives on the rule. FSIS concluded that an industry administered system of voluntary standards is likely to be more expensive and less effective than a governmental one. Finally, FSIS has recognized that public education is essential for assuring food safety, but experience has shown that education alone has limited effectiveness in reducing foodborne illness. Thus, while consumer education may be cost-effective it would not meet the objective of substantially reducing foodborne illness.

Based on a qualitative analysis of broad regulatory strategies, the final RIA concluded that mandatory government standards were needed to achieve a solution that is both cost-effective and meets the objective of reducing the risk of foodborne illness from meat and poultry. Within the framework of a mandatory regulatory program, the final RIA discusses several alternatives to a mandatory HACCP-based program for all inspected establishments including intensified inspection, mandatory HACCP with a small business exemption and mandatory HACCP for only ready-to-eat products. These alternatives were evaluated using several criteria incorporating the goals of effectiveness, efficiency and increased consumer confidence. Using these criteria FSIS concluded that HACCP systems designed to meet microbial performance standards will be both cost-effective and the least burdensome alternative for meeting the foodborne illness reduction objectives of the rule. As the final RIA points out, requiring mandatory process control without microbial performance

standards could lead to processes that are well controlled at unacceptable pathogen levels. FSIS believes that microbial performance standards are necessary to achieve substantial pathogen reduction, encourage industry innovation, and provide the impetus for continuing improvement and increasing effectiveness.

Consistent with the requirements in Section 204 to provide opportunity for input from State, local and tribal government officials, FSIS held a ''Federal-State-Relations Conference,'' August 21–23, 1995, in Washington, D.C. This meeting, in which the National Association of State Departments of Agriculture participated, provided an opportunity for representatives from State government to engage in an open exchange with senior USDA officials on the Pathogen Reduction/HACCP proposal. In addition to Directors of State meat and poultry inspection programs, the meeting included representatives from State Departments of Agriculture, State Health Departments and local food safety enforcement agencies.

Also related to the Section 204 requirements, on May 22, 1995 the Agency held a public meeting for owners and representatives of small meat and poultry establishments and other affected small businesses to discuss the pathogen Reduction/HACCP proposal. Three Directors of State meat and poultry inspection programs provided comments at the meeting.

Section 202 of the Act also requires a summary and evaluation of comments received from State, local, or tribal governments. There were a large number of comments from State and local governments, elected members of State legislatures and associations representing State programs or businesses within States. Collectively, these comments covered most, if not all, of the issues addressed as part of this final rule. This preamble and the final RIA represent a summary and evaluation of these comments.

Most of the comments from State, local, or tribal governments addressed the potential economic impact on small businesses. The Kansas City meeting was intentionally focused on the small business issues. Comments from the State program Directors included recommendations for various forms of exemptions, voluntary programs or financial assistance for small State inspected establishments. The Federal-State-Relations-Conference included a more focused discussion on the cost to the State programs. Attendees stated that FSIS failed to adequately consider the cost of the changes to State programs and that FSIS was increasing the resource demands for State programs without providing adequate funding.

There were also written comments stating that the proposed rule was an unfunded Federal mandate because of the cost to small establishments and the potential impact on State inspection programs. The preliminary RIA did not address the impact on State programs. However, FSIS recognizes that the 27 States operating their own meat and poultry inspection programs will likely have to substantially modify their programs after the HACCP/Pathogen Reduction regulation is finalized to remain ''at least equal to'' Federal inspection programs as required by the FMIA and PPIA. During the regulation's implementation period, FSIS will be using the Agency's State-Federal Program resources to assist the States in bringing the necessary changes to the State inspection programs. Although FSIS has requested some additional funds to implement this rule, FSIS has also acknowledged that implementation of this rule will require eliminating some tasks, conducting other tasks differently and streamlining the organization in order to free up resources to fully address the new requirements. FSIS believes that the same type of restructuring or reprogramming will take place within the State programs. This does guarantee, however, that all States with inspection programs will be able to implement the necessary program changes without additional funds. FSIS believes, however, that with FSIS assistance and with the flexibility provided under the ''equal to'' provisions, most of the States should be able to modify their programs with minimal additional costs. To the extent that there are any additional costs, the State inspection programs are eligible to receive up to 50 percent Federal matching funds.

Regulatory Flexibility Act

The Administrator, FSIS, has determined that this rule will have a significant economic impact on a substantial number of small entities. This final rule uses two size criteria for providing regulatory flexibility for small entities. For livestock and poultry slaughter facilities, the microbial sampling requirements vary depending on the number of animals or birds slaughtered annually. This will significantly reduce the microbial testing costs for smaller establishments which, under the proposed rule, would have been required to test each species they slaughter every day on which slaughter of that species occurred. Under the final rule, establishments that annually slaughter fewer than 6,000 cattle, 20,000 swine (or a combination of such livestock not to exceed a total of 20,000, with a maximum of 6,000 cattle), 60,000 turkeys or 440,000 chickens (or a combination of chickens and turkeys not to exceed 60,000 turkeys or 440,000 birds total) will not be required to operate microbial sampling programs on a continuous basis. Over 78 percent (2,098) of the total 2,682 slaughter establishments meet these criteria. These establishments will be required to annually verify that their slaughter and sanitary dressing processes are under control. However, after an initial period of sampling in each year, these establishments will be required to conduct further sampling in that year only if they make major changes to facilities, equipment, and personnel whereby the slaughter and dressing process is significantly changed.

These low-volume establishments will be required to analyze one sample per week until they have demonstrated compliance with established criteria. At a minimum, low-volume slaughter establishments will be required to collect and analyze one sample per week until they complete a sampling window (13 samples) annually in order to assess whether the performance criteria continue to be met.

Small slaughter establishments that process only minor species (e.g., goats, sheep, ducks, pheasants, etc.) will not be required to conduct any sampling. Small slaughter establishments will also face less burden because the final rule no longer requires that both cattle and swine or chickens and turkeys be sampled in the same establishment, i.e., if a low-volume establishment slaughters both cattle and swine or turkeys and chickens, it will be required to analyze one sample per week from the predominant species until it has demonstrated compliance with established criteria. The costs of small slaughter establishments are also reduced because the carcass cooling and antimicrobial near-term requirements have been eliminated from the final rule. Sampling frequencies for even the larger slaughter establishments will be based on production-volume, thus spreading the cost per pound relatively equally among establishments.

For the purpose of sequencing HACCP implementation FSIS has defined a small entity using the Small Business Administration size standard for a small meat or poultry manufacturing establishment. That is, all establishments with fewer than 500 employees will have additional time to implement HACCP. In addition, in

response to comments that there are hundreds of ''very small'' or ''micro'' establishments, the Agency will classify an establishment as ''very small'' if it has either fewer than 10 employees or annual sales of less than $2.5 million. This sequencing of HACCP responds to a large number of comments requesting that small businesses be given a longer period of time to implement HACCP requirements. Many small businesses stated they did not want to be exempt, but asked for more flexibility in implementing HACCP.

The FRIA is based on 353 large firms implementing HACCP at 18 months, 2,941 small firms implementing HACCP at 30 months and 5,785 very small (2,892 Federal plus 2,893 State) firms implementing HACCP at 42 months.

Table 6 illustrates the costs for a small, single-shift, processing establishment (no TQC or sanitation PQC program) with two distinct production operations other than raw ground product (overall average estimated at 2.29 operations per establishment).

TABLE 6.—COSTS FOR TYPICAL SINGLE-SHIFT PROCESSING ESTABLISHMENT

[Dollars]

Requirement	Development and implementation costs	Recurring annual costs
Sanitation SOP's	190	1,242
HACCP Plan Development	6,958	0
Annual Plan Reassessment ...	0	102
Training	2,514	251
Recordkeeping	0	6,480
Total	9,662	8,075

If one of the two production operations produced a raw ground product, the establishment would have to meet the pathogen reduction performance standard for that product. The FRIA points out that raw ground operations do not have the same opportunities to reduce *Salmonella* levels as do slaughter establishments. They can control growth by avoiding temperature abuse and can limit cross-contamination, but basically they must depend on the *Salmonella* levels of their incoming product in order to meet the performance standards. These establishments may choose to test incoming product in order to eliminate suppliers whose product is found to be positive. The FRIA has assumed that the low volume producers would not test incoming ingredients.

Table 7 illustrates the costs for a small, single-shift, combination (slaughter and further processing) establishment that slaughters cattle or swine, but not both, and has a single further processing operation other than ground product. The establishment is not under TQC inspection.

The cost of meeting the pathogen reduction performance standards assumes that the establishment will use a hot water antimicrobial rinse and have one sample per month analyzed at an outside laboratory ($33.35 per sample-$400 per year). The average number of head slaughtered in a low volume establishment is approximately 5,000 annually. The annual cost for the rinse is $400.

TABLE 7.—COSTS FOR TYPICAL SINGLE-SHIFT COMBINATION ESTABLISHMENT

[Dollars]

Requirement	Development and implementation costs	Recurring annual costs
Sanitation SOP's	190	1,242
Compliance with *Salmonella* Standards	0	800
E. coli Sampling	1,043	653
HACCP Plan Development	6,958	0
Annual Plan Reassessment ...	0	102
Training	5,028	503
Recordkeeping	0	5,434
Total	13,219	8,734

The development costs for *E. coli* sampling in the small establishment includes $640 for developing a sampling plan and $403 to train an individual to conduct aseptic sampling. The recurring costs are based on the assumption that an average low volume slaughter establishment will have to complete two sampling windows (26 samples) before they demonstrate compliance with established criteria.

The cost of HACCP training has doubled for the combination establishment because the FRIA assumed that slaughter and processing operations are significantly different, so that the establishment must either train two employees or send one employee to two separate training courses.

The HACCP recordkeeping costs (monitoring CCPs and recording findings, reviewing records and storing records) in the above two examples assume that the establishments are operating each process continuously over a standard 52-week, 260-day, 2,080-hour work year. Data collected during the preliminary analysis indicates that many low-volume establishments frequently have only a single production line operating at a given time. The final analysis estimates an average annual cost for HACCP monitoring and recording of $4,030 for low-volume establishments.

Executive Order 12778

This rule has been reviewed pursuant to Executive Order 12778, Civil Justice Reform. States and local jurisdictions are preempted under the FMIA and PPIA from imposing any requirements with respect to federally inspected premises and facilities, and operations of such establishments, that are in addition to, or different from, those imposed under the FMIA and PPIA. States and local jurisdictions may, however, exercise concurrent jurisdiction over meat and poultry products that are outside official establishments for the purpose of preventing the distribution of meat or poultry products that are misbranded or adulterated under the FMIA or PPIA, or, in the case of imported articles, which are not at such an establishment, after their entry into the United States. Under the FMIA and PPIA, States that maintain meat and poultry inspection programs must impose requirements on State-inspected products and establishments that are at least equal to those required under the FMIA and the PPIA. These States may, however, impose more stringent requirements on such State-inspected products and establishments.

Paperwork Requirements

The paperwork and recordkeeping for this rule are approved under OMB number 0583–0103, ''Pathogen Reduction, Hazard Analysis and Critical Control Points (HACCP) Systems.'' OMB approved 14,371,901 annual reporting hours. Overall, the burden hours associated with the rule decreased. FSIS determined that the new burden is 8,053,319 hours, a 6,318,582-hour reduction. This reduction resulted from the elimination of proposed requirements and the adjustment of certain burden hour estimations. The following discusses the finalized paperwork and recordkeeping requirements and the changes in the burden estimations.

Sanitation Standard Operating Procedures (Sanitation SOP's)

As part of establishments' sanitation requirements, each establishment must develop and maintain Sanitation SOP's that must, at a minimum, address core

sanitation procedures. As part of the Sanitation SOP's, establishment employees(s) must record results of daily sanitation checks on a checklist at the frequencies stated in the Sanitation SOP's. The checklist must include both preoperational sanitation checks and operational sanitation checks. This checklist must be made available to FSIS upon request.

Agency subject matter experts and private consultants estimate that it will take an average of 5, 10, and 25 hours to develop a sanitation program for low, medium, and high volume establishments, respectively. The burden of documenting the adherence to Sanitation SOP's is based on three factors; recording, reviewing, and storage. Recording encompasses conducting and inscribing the finding from an observation and filing of the document produced. This action is assumed to take 15, 25, and 45 minutes per day in a low-, medium-, and high-volume establishment, respectively. Review of the records generated is estimated to take 5, 10, and 20 minutes per day for a low-, medium-, and high-volume establishment, respectively.

OMB approved 1,243,622 burden hours for Sanitation SOP's plan development, recording and filing, and record review. FSIS determined that the burden estimate for these activities was too high. Based on more accurate data, FSIS reevaluated the burden estimate and calculated the new burden hours to be 1,231,986 hours. This is a 11,636 burden hour decrease.

Time and Temperature

As discussed earlier, the proposed time-and-temperature requirements are eliminated. OMB approved 869,156 burden hours for time-and-temperature requirements. Therefore, elimination of the time-and-temperature requirements, results in a 869,156 burden hour decrease.

Microbiological Testing

As part of microbiological testing, each slaughter establishment must develop written procedures outlining specimen collection and handling. The slaughter establishments will be responsible for entering the results into a statistical process control chart or table. The data and chart will be available for review by FSIS upon request.

Agency subject matter experts estimate that it will take 25 hours for establishments to develop a microbial sampling and analysis plan. It will take an estimated 17.5 minutes to collect samples and 5 minutes per sample to enter data into the chart, review, and file the information.

OMB has approved 1,177,924 burden hours for microbial testing plan development, sample collection, and data entry by meat and poultry establishments. As discussed earlier, the number of meat and poultry establishments required by the Pathogen Reduction/HACCP proposal to perform microbial testing and the number of tests required decreased. FSIS reevaluated this burden estimate and concluded that the burden for microbial testing by meat and poultry establishments is 468,061 burden hours. Therefore, the burden hour decrease associated with microbial testing is 709,863 hours.

HACCP

Establishments will develop written HACCP plans that include: identification of the food safety hazards reasonably likely to occur; identification and description of the critical control point for each identified hazard; specification of the critical limit that may not be exceeded at the CCP; description of the monitoring procedure or device to be used; description of the corrective action to be taken if the limit is exceeded; description of the records that will be generated and maintained regarding this CCP; and description of the establishment verification activities and the frequency at which they are to be conducted. Performance standards or limits specified in related FSIS regulations must be accounted for in the critical limits.

Establishments will keep records of measurements taken during slaughter and processing, corrective actions, verification check results, and related activities that contain the identity of the product, the product code or slaughter production lot, and the date the record was made. The record will be signed by the operator or observer.

The HACCP records will be reviewed by an establishment employee other than the one who produced the record, if practicable, before the product is distributed in commerce. If a HACCP-trained individual is on-site, that person should be the second reviewer. The reviewer will sign the records.

Although the amount of time to develop a plan for each process varies based on its difficulty, Agency subject matter experts estimate that low, medium, high volume and state establishments will need an average of 136, 126, 113, and 78 hours to develop each plan. There are an estimated 7.4 CCP's for each processing plan in Federal establishments, 5 CCP's for each slaughter plan in Federal establishments, and 5 CCP's for both types of plans in State slaughter establishments. The recording and filing is assessed to take 5 minutes per CCP and the review should take 2 minutes per CCP.

OMB approved 11,081,199 burden hours for the maintenance of the HACCP-trained individual's resume, plan development, recording, and record review. As discussed earlier, FSIS will not require personnel resumes to be maintained, thus the burden reported for this activity is eliminated. Also, FSIS determined that the burden estimate for plan development, recording, and record review was too high. Based on more accurate data, FSIS reevaluated the burden estimate and calculated the new burden hours to be 6,353,272. This is a 4,727,927 burden hour decrease.

To better illuminate the burden hour changes, the following table is provided.

TABLE 8.—CHANGES IN BURDEN HOURS

Requirement	Burden hours approved by OMB	New burden hours	Reduction in burden hours
SOP's for Sanitation	1,243,622	1,231,986	11,636
Time and Temperature	869,156	0.00	869,156
Microbiological Testing	1,177,924	468,061	709,863
HACCP	11,081,199	6,353,272	4,727,927
Total (Hours)	14,371,901	8,053,319	6,318,582

The changes in the paperwork and recordkeeping requirements contained in this rule have been submitted to the Office of Management and Budget for approval under the Paperwork Reduction Act (44 U.S.C. 3501 *et seq.*).

VII. Final Rules

List of Subjects

9 CFR Part 304

Meat inspection.

9 CFR Part 308

Meat inspection.

9 CFR Part 310

Meat inspection, Microbial testing.

9 CFR Part 320

Meat inspection, Reporting and recordkeeping requirements.

9 CFR Part 327

Imports.

9 CFR Part 381

Poultry and Poultry products, Microbial testing.

9 CFR Part 416

Sanitation.

9 CFR Part 417

Hazard Analysis and Critical Control Point (HACCP) Systems.

For reasons set forth in the preamble, 9 CFR chapter III is amended as follows:

PART 304—APPLICATION FOR INSPECTION; GRANT OR REFUSAL OF INSPECTION

1. The authority citation for part 304 is revised to read as follows:

Authority: 21 U.S.C. 601–695; 7 CFR 2.18, 2.53.

2. Section 304.3 is added to read as follows:

§ 304.3 Conditions for receiving inspection.

(a) Before being granted Federal inspection, an establishment shall have developed written sanitation Standard Operating Procedures, as required by part 416 of this chapter.

(b) Before being granted Federal inspection, an establishment shall have conducted a hazard analysis and developed and validated a HACCP plan, as required by §§ 417.2 and 417.4 of this chapter. A conditional grant of inspection shall be issued for a period not to exceed 90 days, during which period the establishment must validate its HACCP plan.

(c) Before producing new product for distribution in commerce, an establishment shall have conducted a hazard analysis and developed a HACCP plan applicable to that product in accordance with § 417.2 of this chapter. During a period not to exceed 90 days after the date the new product is produced for distribution in commerce, the establishment shall validate its HACCP plan, in accordance with § 417.4 of this chapter.

PART 308—SANITATION

3. The authority citation for part 308 is revised to read as follows:

Authority: 21 U.S.C. 601–695; 7 CFR 2.18, 2.53.

4. Section 308.3 is amended by adding a sentence to the end of paragraph (a) to read as follows:

§ 308.3 Establishments; sanitary condition; requirements.

(a) * * *. The provisions of part 416 of this chapter also apply.

* * * * *

PART 310—POST MORTEM INSPECTION

5. The authority citation for part 310 is revised to read as follows:

Authority: 21 U.S.C. 601–695; 7 CFR 2.18, 2.53.

6. Part 310 is amended by adding a new § 310.25 to read as follows:

§ 310.25 Contamination with microorganisms; pathogen reduction performance standards for Salmonella.

(a) Criteria for verifying process control; *E. coli* testing.

(1) Each official establishment that slaughters cattle and/or hogs shall test for *Escherichia coli* Biotype I (*E. coli*) and shall:

(i) Collect samples in accordance with the sampling techniques, methodology, and frequency requirements in paragraph (a)(2) of this section;

(ii) Obtain analytic results in accordance with paragraph (a)(3) of this section; and

(iii) Maintain records of such analytic results in accordance with paragraph (a)(4) of this section.

(2) Sampling requirements.

(i) *Written procedures.* Each establishment shall prepare written specimen collection procedures which shall identify employees designated to collect samples, and shall address location(s) of sampling, how sampling randomness is achieved, and handling of the sample to ensure sample integrity. The written procedure shall be made available to FSIS upon request.

(ii) *Sample collection.* The establishment shall collect random samples from carcasses in the cooler. Samples shall be collected by sponging three sites on the selected carcass. On cattle carcasses, establishments shall take samples from the flank, brisket, and rump; on swine carcasses, establishments shall take samples from the ham, belly, and jowl areas. [1]

(iii) *Sampling frequency.* Samples shall be taken at a frequency proportional to a slaughter establishment's volume of production, at the following rates:

Bovines: 1 test per 300 carcasses
Swine: 1 test per 1,000 carcasses

(iv) *Sampling frequency alternatives.* An establishment operating under a validated HACCP plan in accordance with § 417.2(b) of this chapter may substitute an alternative frequency for the frequency of sampling required under paragraph (a)(2)(iii) of this section if,

(A) The alternative is an integral part of the establishment's verification procedures for its HACCP plan and,

(B) FSIS does not determine, and notify the establishment in writing, that the alternative frequency is inadequate to verify the effectiveness of the establishment's processing controls.

(v) *Sampling in very low volume establishments.*

(A) An establishment annually slaughtering no more than 6,000 bovines, 20,000 swine, or a combination of bovines and swine not exceeding 6,000 bovines and 20,000 animals total, shall collect one sample per week starting the first full week of June and continuing through August of each year. An establishment slaughtering both species shall collect samples from the species it slaughters in larger numbers. Weekly samples shall be collected and tested until the establishment has completed and recorded one series of 13 tests that meets the criteria shown in Table 1 of paragraph (a)(5) of this section.

(B) Upon the establishment's meeting requirements of paragraph (a)(2)(v)(A) of this section, weekly sampling and testing is optional, unless changes are made in establishment facilities, equipment, personnel or procedures that may affect the adequacy of existing process control measures, as determined by the establishment or FSIS. FSIS determinations that changes have been made requiring resumption of weekly testing shall be provided to the establishment in writing.

(3) *Analysis of samples.* Laboratories may use any quantitative method for

[1] A copy of FSIS's ''Guidelines for *E. coli* Testing for Process Control verification in Cattle and Swine Slaughter Establishments'' is available for inspection in the FSIS Docket Room.

analysis of *E. coli* that is approved by the Association of Official Analytic Chemists International [2] or approved by a scientific body in collaborative trials against the three tube Most Probable Number (MPN) method and agreeing with the 95 percent upper and lower confidence limit of the appropriate MPN index.

(4) *Recording of test results.* The establishment shall maintain accurate records of all test results, in terms of cfu/cm^2 of surface area sponged. Results shall be recorded onto a process control chart or table showing at least the most recent 13 test results, by class of livestock slaughtered, permitting evaluation of the laboratory results in accordance with the criteria set forth in paragraph (a)(5) of this section. Records shall be retained at the establishment for a period of 12 months and shall be made available to FSIS upon request.

(5) *Criteria for Evaluation of test results.* An establishment is operating within the criteria when the most recent *E. coli* test result does not exceed the upper limit (M), and the number of samples, if any, testing positive at levels above (m) is three or fewer out of the most recent 13 samples (n) taken, as follows:

TABLE 1.—EVALUATION OF E. COLI TEST RESULTS

Slaughter class	Lower limit of marginal range (m)	Upper limit of marginal range (M)	Number of samples tested (n)	Maximum number permitted in marginal range (c)
Steers/heifers	Negative [a]	100 cfu/cm^2	13	3
Cows/bulls	Negative [a]	100 cfu/cm^2	13	3
Market hogs	10 cfu/cm^2	10,000 cfu/cm^2	13	3

[a] Negative is defined by the sensitivity of the method used in the baseline study with a limit of sensitivity of at least 5 cfu/cm^2 carcass surface area.

(6) *Failure to meet criteria.* Test results that do not meet the criteria described in paragraph (a)(5) of this section are an indication that the establishment may not be maintaining process controls sufficient to prevent fecal contamination. FSIS shall take further action as appropriate to ensure that all applicable provisions of the law are being met.

(7) *Failure to test and record.* Inspection shall be suspended in accordance with rules of practice that will be adopted for such proceedings upon a finding by FSIS that one or more provisions of paragraphs (a) (1)–(4) of this section have not been complied with and written notice of same has been provided to the establishment.

(b) Pathogen reduction performance standard; *Salmonella.*

(1) *Raw meat product performance standards for Salmonella.* An establishment's raw meat products, when sampled and tested by FSIS for *Salmonella*, as set forth in this section, may not test positive for *Salmonella* at a rate exceeding the applicable national pathogen reduction performance standard, as provided in Table 2:

TABLE 2.—SALMONELLA PERFORMANCE STANDARDS

Class of product	Performance Standard (percent positive for *Salmonella*) [a]	Number of samples tested (n)	Maximum number of positives to achieve Standard (c)
Steers/heifers	1.0%	82	1
Cows/bulls	2.7%	58	2
Ground beef	7.5%	53	5
Hogs	8.7%	55	6
Fresh pork sausages	[b] N.A.	N.A.	N.A.

[a] Performance Standards are FSIS's calculation of the national prevalence of *Salmonella* on the indicated raw product based on data developed by FSIS in its nationwide microbiological data collection programs and surveys. Copies of Reports on FSIS's Nationwide Microbiological Data Collection Programs and Nationwide Microbiological Surveys used in determining the prevalence of *Salmonella* on raw products are available in the FSIS Docket Room.

[b] Not available; values for fresh pork sausage will be added upon completion data collection programs for those products.

(2) *Enforcement.* FSIS will sample and test raw meat products in an individual establishment on an unannounced basis to determine prevalence of *Salmonella* in such products to determine compliance with the standard. The frequency and timing of such testing will be based on the establishment's previous test results and other information concerning the establishment's performance. In an establishment producing more than one class of product subject to the pathogen reduction standard, FSIS may sample any or all such classes of products.[3]

(3) *Noncompliance and establishment response.* When FSIS determines that an

[2] A copy of the ''Official Methods of Analysis of the Association of Official Analytical Chemists International,'' 16th edition, 1995, is on file with the Director, Office of the Federal Register, and may be purchased from the Association of Official Analytical Chemists International, Inc., 481 North Frederick Ave., Suite 500, Gaithersburg, MD 20877–2417.

[3] A copy of FSIS's ''Sample Collection Guidelines and Procedure for Isolation and Identification of *Salmonella* from Meat and Poultry Products'' is available for inspection in the FSIS Docket Room.

establishment has not met the performance standard:

(i) The establishment shall take immediate action to meet the standard.

(ii) If the establishment fails to meet the standard on the next series of compliance tests for that product, the establishment shall reassess its HACCP plan for that product and take appropriate corrective actions.

(iii) Failure by the establishment to act in accordance with paragraph (b)(3)(ii) of this section, or failure to meet the standard on the third consecutive series of FSIS-conducted tests for that product, constitutes failure to maintain sanitary conditions and failure to maintain an adequate HACCP plan, in accordance with part 417 of this chapter, for that product, and will cause FSIS to suspend inspection services. Such suspension will remain in effect until the establishment submits to the FSIS Administrator or his/her designee satisfactory written assurances detailing the action taken to correct the HACCP system and, as appropriate, other measures taken by the establishment to reduce the prevalence of pathogens.

7. The authority citation for part 320 continues to read as follows:

Authority: 21 U.S.C. 601–695; 7 CFR 2.18, 2.53.

8. Section 320.6 is amended by revising paragraph (a) to read as follows:

§ 320.6 Information and reports required from official establishment operators.

(a) The operator of each official establishment shall furnish to Program employees accurate information as to all matters needed by them for making their daily reports of the amount of products prepared or handled in the departments of the establishment to which they are assigned and such reports concerning sanitation, mandatory microbiological testing, and other aspects of the operations of the establishment and the conduct of inspection, as may be required by the Administrator in special cases.

* * * * *

PART 327—IMPORTED PRODUCTS

9. The authority citation for Part 327 continues to read as follows:

Authority: 21 U.S.C. 601–695; 7 CFR 2.18, 2.53.

10. Section 327.2 is amended by redesignating paragraphs (a)(2)(i) (*a*)–(*g*) as (a)(2)(i) (A)–(G), redesignating paragraphs (a)(2)(ii) (*a*)–(*g*) to (a)(2)(ii) (A)–(G), redesignating paragraph (a)(2)(ii)(*h*) as (a)(2)(ii)(I), and by adding a new paragraph (a)(2)(ii)(H) to read as set forth below, and by redesignating paragraphs (a)(2)(iv) (*a*)–(*c*) as (a)(2)(iv) (A)–(C).

§ 327.2 Eligibility of foreign countries for importation of products into the United States.

* * * * *

(a) * * *

(2) * * *

(ii) * * *

(H) A Hazard Analysis and Critical Control Point (HACCP) system, as set forth in part 417 of this chapter.

* * * * *

PART 381—POULTRY PRODUCTS INSPECTION REGULATIONS

11. The authority citation for part 381 is revised to read as follows:

Authority: 7 U.S.C. 138f, 450; 21 U.S.C. 451–470; 7 CFR 2.18, 2.53.

Subpart D—Application for Inspection; Grant or Refusal of Inspection

12. A new § 381.22 is added to subpart D to read as follows:

§ 381.22 Conditions for receiving inspection.

(a) Before being granted Federal inspection, an establishment shall have developed written sanitation Standard Operating Procedures, in accordance with Part 416 of this chapter.

(b) Before being granted Federal inspection, an establishment shall have conducted a hazard analysis and developed and validated a HACCP plan, in accordance with §§ 417.2 and 417.4 of this chapter. A conditional grant of inspection shall be issued for a period not to exceed 90 days, during which period the establishment must validate its HACCP plan.

(c) Before producing new product for distribution in commerce, an establishment shall have conducted a hazard analysis and developed a HACCP plan applicable to that product in accordance with § 417.2 of this chapter. During a period not to exceed 90 days after the date the new product is produced for distribution in commerce, the establishment shall validate its HACCP plan, in accordance with § 417.4 of this chapter.

Subpart H—Sanitation

13. Section 381.45 is amended to read as follows:

§ 381.45 Minimum standards for sanitation, facilities, and operating procedures in official establishments.

The provisions of §§ 381.46 and 381.61, inclusive, and part 416 of this chapter shall apply with respect to all official establishments.

Subpart K—Post Mortem Inspection: Disposition of Carcasses and Parts

14. Section 381.94 is added to subpart K to read as follows:

§ 381.94 Contamination with Microorganisms; process control verification criteria and testing; pathogen reduction standards.

(a) Criteria for verifying process control; *E. coli* testing.

(1) Each official establishment that slaughters poultry shall test for *Escherichia coli* Biotype I (*E. coli*) and shall:

(i) Collect samples in accordance with the sampling techniques, methodology, and frequency requirements in paragraph (a)(2) of this section;

(ii) Obtain analytic results in accordance with paragraph (a)(3) of this section; and

(iii) Maintain records of such analytic results in accordance with paragraph (a)(4) of this section.

(2) Sampling requirements.

(i) *Written procedures.* Each establishment shall prepare written specimen collection procedures which shall identify employees designated to collect samples, and shall address location(s) of sampling, how sampling randomness is achieved, and handling of the sample to ensure sample integrity. The written procedure shall be made available to FSIS upon request.

(ii) *Sample collection.* The establishment shall collect random samples from carcasses. Carcasses to be sampled will be selected randomly. Samples shall be collected by taking a whole bird from the end of the chilling process, after the drip line, and rinsing it in an amount of buffer appropriate for the type of bird being tested.[1]

(iii) *Sampling frequency.* Samples will be taken at a frequency proportional to a slaughter establishment's volume of production, at the following rates:

Chickens: 1 sample per 22,000 carcasses
Turkeys: 1 sample per 3,000 carcasses

(iv) *Sampling frequency alternatives.* An establishment operating under a validated HACCP plan in accordance with § 417.2(b) of this chapter may substitute an alternative frequency for the frequency of sampling required under paragraph (a)(2)(iii) of this section if,

(A) The alternative is an integral part of the establishment's verification procedures for its HACCP plan and,

(B) FSIS does not determine, and notify the establishment in writing, that

[1] A copy of FSIS's guideline, ''Sampling Technique for *E. coli* in Raw Meat and Poultry for Process Control Verification,'' is available in the FSIS Docket Room for inspection.

the alternative frequency is inadequate to verify the effectiveness of the establishment's processing controls.

(v) *Sampling in very low volume establishments.*

(A) An establishment annually slaughtering no more than 440,000 chickens, 60,000 turkeys, or a combination of chickens and turkeys not exceeding 60,000 turkeys and 440,000 birds total, shall collect one sample per week starting the first full week of June through August of each year. An establishment slaughtering both chickens and turkeys shall collect samples from the species it slaughters in larger numbers. Weekly samples shall be collected and tested until the establishment has completed and recorded one series of 13 tests that meets the criteria shown in Table 1 of paragraph (a)(5) of this section.

(B) Upon the establishment's meeting the requirements of paragraph (a)(2)(v)(A) of this section, weekly sampling and testing is optional, unless changes are made in establishment facilities, equipment, personnel or procedures that may affect the adequacy of existing process control measures, as determined by the establishment or by FSIS. FSIS determinations that changes have been made requiring resumption of weekly testing shall be provided to the establishment in writing.

(3) *Analysis of samples.* Laboratories may use any quantitative method for analysis of *E. coli* that is sensitive to 5 or fewer cfu/ml of rinse fluid and is approved by the Association of Official Analytic Chemists International [2] or approved by a scientific body in collaborative trials against the three tube Most Probable Number (MPN) method and agreeing with the 95 percent upper and lower confidence limit of the appropriate MPN index.

(4) *Recording of test results.* The establishment shall maintain accurate records of all test results, in terms of cfu/ml of rinse fluid. Results shall be recorded onto a process control chart or table showing at least the most recent 13 test results, by kind of poultry slaughtered, permitting evaluation of the laboratory results in accordance with the criteria set forth in paragraph (a)(5) of this section. Records shall be retained at the establishment for a period of 12 months and shall be made available to FSIS upon request.

(5) *Criteria for Evaluation of test results.* An establishment is operating within the criteria when the most recent *E. coli* test result does not exceed the upper limit (M), and the number of samples, if any, testing positive at levels above (m) is three or fewer out of the most recent 13 samples (n) taken, as follows:

TABLE 1.—EVALUATION OF E. COLI TEST RESULTS

Slaughter class	Lower limit of marginal range (m)	Upper limit of marginal range (M)	Number of sample tested (n)	Maximum number permitted in marginal range (c)
Broilers	100 cfu/ml	1,000 cfu/ml	13	3
Turkeys	[a] N.A.	N.A.	N.A.	N.A.

[a] Not available; values for turkeys will be added upon completion of data collection program for turkeys.

(6) *Failure to meet criteria.* Test results that do not meet the criteria described in paragraph (a)(5) of this section are an indication that the establishment may not be maintaining process controls sufficient to prevent fecal contamination. FSIS shall take further action as appropriate to ensure that all applicable provisions of the law are being met.

(7) *Failure to test and record.* Inspection will be suspended in accordance with rules of practice that will be adopted for such proceeding, upon a finding by FSIS that one or more provisions of paragraphs (a) (1)–(4) of this section have not been complied with and written notice of same has been provided to the establishment.

(b) Pathogen reduction performance standards; *Salmonella.*

(1) *Raw poultry product performance standards for Salmonella.* (i) An establishment's raw poultry products, when sampled and tested by FSIS for *Salmonella* as set forth in this section, may not test positive for *Salmonella* at a rate exceeding the applicable national pathogen reduction performance standard, as provided in Table 2:

TABLE 2.—SALMONELLA PERFORMANCE STANDARDS

Class of product	Performance Standard (percent positive for *Salmonella*) [a]	Number of samples tested (n)	Maximum number of positives to achieve Standard (c)
Broilers	[b] 20.0%	51	12
Ground chicken	44.6	53	26
Ground turkey	49.9	53	29
Turkeys	[b] N.A.	N.A.	N.A.

[a] Performance Standards are FSIS's calculation of the national prevalence of *Salmonella* on the indicated raw products based on data developed by FSIS in its nationwide microbiological baseline data collection programs and surveys. (Copies of Reports on FSIS's Nationwide Microbiological Data Collection Programs and Nationwide Microbiological Surveys used in determining the prevalence of *Salmonella* on raw products are avialable in the FSIS Docket Room.)

[b] Standard is based on partial analysis of baseline survey data; subject to confirmation upon publication of baseline survey report.

[d] Not available; baseline targets for turkeys will be added upon completion of the data collection programs for that product.

[2] A copy of the ''Official Methods of Analysis of the Association of Official Analytical Chemists International,'' 16th edition, 1995, is on file with the Director, Office of the Federal Register, and may be purchased from the Association of Official Analytical Chemists International, Inc., 481 North Frederick Ave., Suite 500, Gaithersburg, MD 20877–2417.

(2) *Enforcement.* FSIS will sample and test raw poultry products in an individual establishment on an unannounced basis to determine prevalence of *Salmonella* in such products to determine compliance with the standard. The frequency and timing of such testing will be based on the establishment's previous test results and other information concerning the establishment's performance. In an establishment producing more than one class of product subject to the pathogen reduction standard, FSIS may sample any or all such classes of products.[3]

(3) *Noncompliance and establishment response.* When FSIS determines that an establishment has not met the performance standard:

(i) The establishment shall take immediate action to meet the standard.

(ii) If the establishment fails to meet the standard on the next series of compliance tests for that product, the establishment shall reassess its HACCP plan for that product.

(iii) Failure by the establishment to act in accordance with paragraph (b)(3)(ii) of this section, or failure to meet the standard on the third consecutive series of FSIS-conducted tests for that product, constitutes failure to maintain sanitary conditions and failure to maintain an adequate HACCP plan, in accordance with part 417 of this chapter, for that product, and will cause FSIS to suspend inspection services. Such suspension will remain in effect until the establishment submits to the FSIS Administrator or his/her designee satisfactory written assurances detailing the action taken to correct the HACCP system and, as appropriate, other measures taken by the establishment to reduce the prevalence of pathogens.

Subpart Q—Records, Registration, and Reports

15. Section 381.180 is amended by revising paragraph (a) to read as follows:

§ 381.180 Information and reports required from official establishment operators.

(a) The operator of each official establishment shall furnish to Program employees accurate information as to all matters needed by them for making their daily reports of the amount of products prepared or handled in the departments of the establishment to which they are assigned and such reports concerning sanitation, mandatory microbiological testing, and other aspects of the operations of the establishment and the conduct of inspection thereat, as may be required by the Administrator in special cases.

* * * * *

Subpart T—Imported Poultry Products

16. Section 381.196 is amended by redesignating paragraphs (a)(2)(i) (*a*)–(*g*) as paragraphs (a)(2)(i) (A)–(G), redesignating paragraphs (a)(2)(ii) (*a*)–(*g*) to (a)(2)(ii) (A)–(G), redesignating paragraph (a)(2)(ii)(*h*) as (a)(2)(ii)(I), and by adding a new paragraph (a)(2)(ii)(H) to read as set forth below, and redesignating paragraphs (a)(2)(iv) (*a*)–(*c*) as (a)(2)(iv)(A)–(c).

§ 381.196 Eligibility of foreign countries for importation of products into the United States.

* * * * *

(a) * * *

(2) * * *

(ii) * * *

(H) A Hazard Analysis and Critical Control Point (HACCP) system, as set forth in part 417 of this chapter.

* * * * *

17. A new subchapter E, consisting of Parts 416 and 417 is added to chapter III—Food Safety and Inspection Service, Meat and Poultry Inspection, Department of Agriculture to read as follows:

SUBCHAPTER E—REGULATORY REQUIREMENTS UNDER THE FEDERAL MEAT INSPECTION ACT AND THE POULTRY PRODUCTS INSPECTION ACT

Part

416 Sanitation
417 Hazard Analysis and Critical Control Point (HACCP) Systems

SUBCHAPTER E—REGULATORY REQUIREMENTS UNDER THE FEDERAL MEAT INSPECTION ACT AND THE POULTRY PRODUCTS INSPECTION ACT

PART 416—SANITATION

Sec.

416.11 General rules.
416.12 Development of sanitation SOP's.
416.13 Implementation of SOP's.
416.14 Maintenance of Sanitation SOP's.
416.15 Corrective Actions.
416.16 Recordkeeping Requirements.
416.17 Agency verification.

Authority: 21 U.S.C. 451–470, 601–695; 7 U.S.C. 450, 1901–1906; 7 CFR 2.18, 2.53.

§ 416.11 General rules.

Each official establishment shall develop, implement, and maintain written standard operating procedures for sanitation (Sanitation SOP's) in accordance with the requirements of this part.

§ 416.12 Development of Sanitation SOP's.

(a) The Sanitation SOP's shall describe all procedures an official establishment will conduct daily, before and during operations, sufficient to prevent direct contamination or adulteration of product(s).

(b) The Sanitation SOP's shall be signed and dated by the individual with overall authority on-site or a higher level official of the establishment. This signature shall signify that the establishment will implement the Sanitation SOP's as specified and will maintain the Sanitation SOP's in accordance with the requirements of this part. The Sanitation SOP's shall be signed and dated upon initially implementing the Sanitation SOP's and upon any modification to the Sanitation SOP's.

(c) Procedures in the Sanitation SOP's that are to be conducted prior to operations shall be identified as such, and shall address, at a minimum, the cleaning of food contact surfaces of facilities, equipment, and utensils.

(d) The Sanitation SOP's shall specify the frequency with which each procedure in the Sanitation SOP's is to be conducted and identify the establishment employee(s) responsible for the implementation and maintenance of such procedure(s).

§ 416.13 Implementation of SOP's.

(a) Each official establishment shall conduct the pre-operational procedures in the Sanitation SOP's before the start of operations.

(b) Each official establishment shall conduct all other procedures in the Sanitation SOP's at the frequencies specified.

(c) Each official establishment shall monitor daily the implementation of the procedures in the Sanitation SOP's.

§ 416.14 Maintenance of Sanitation SOP's.

Each official establishment shall routinely evaluate the effectiveness of the Sanitation SOP's and the procedures therein in preventing direct contamination or adulteration of product(s) and shall revise both as necessary to keep them effective and current with respect to changes in facilities, equipment, utensils, operations, or personnel.

§ 416.15 Corrective Actions.

(a) Each official establishment shall take appropriate corrective action(s) when either the establishment or FSIS determines that the establishment's Sanitation SOP's or the procedures specified therein, or the implementation or maintenance of the Sanitation SOP's, may have failed to prevent direct

[3] A copy of FSIS's ''Sample Collection Guidelines and Procedure for Isolation and Identification of *Salmonella* from Raw Meat and Poultry Products'' is available for inspection in the FSIS Docket Room.

contamination or adulteration of product(s).

(b) Corrective actions include procedures to ensure appropriate disposition of product(s) that may be contaminated, restore sanitary conditions, and prevent the recurrence of direct contamination or adulteration of product(s), including appropriate reevaluation and modification of the Sanitation SOP's and the procedures specified therein.

§ 416.16 Recordkeeping requirements.

(a) Each official establishment shall maintain daily records sufficient to document the implementation and monitoring of the Sanitation SOP's and any corrective actions taken. The establishment employee(s) specified in the Sanitation SOP's as being responsible for the implementation and monitoring of the procedure(s) specified in the Sanitation SOP's shall authenticate these records with his or her initials and the date.

(b) Records required by this part may be maintained on computers provided the establishment implements appropriate controls to ensure the integrity of the electronic data.

(c) Records required by this part shall be maintained for at least 6 months and made accesable available to FSIS. All such records shall be maintained at the official establishment for 48 hours following completion, after which they may be maintained off-site provided such records can be made available to FSIS within 24 hours of request.

§ 416.17 Agency verification.

FSIS shall verify the adequacy and effectiveness of the Sanitation SOP's and the procedures specified therein by determining that they meet the requirements of this part. Such verification may include:

(a) Reviewing the Sanitation SOP's;

(b) Reviewing the daily records documenting the implementation of the Sanitation SOP's and the procedures specified therein and any corrective actions taken or required to be taken;

(c) Direct observation of the implementation of the Sanitation SOP's and the procedures specified therein and any corrective actions taken or required to be taken; and

(d) Direct observation or testing to assess the sanitary conditions in the establishment.

PART 417—HAZARD ANALYSIS AND CRITICAL CONTROL POINT (HACCP) SYSTEMS

Sec.

417.1 Definitions.
417.2 Hazard analysis and HACCP plan.
417.3 Corrective actions.
417.4 Validation, verification, reassessment.
417.5 Records.
417.6 Inadequate HACCP Systems.
417.7 Training.
417.8 Agency verification.

Authority: 7 U.S.C. 450; 21 U.S.C. 451–470, 601–695; 7 U.S.C. 1901–1906; 7 CFR 2.18, 2.53.

§ 417.1 Definitions.

For purposes of this part, the following definitions shall apply:

Corrective action. Procedures to be followed when a deviation occurs.

Critical control point. A point, step, or procedure in a food process at which control can be applied and, as a result, a food safety hazard can be prevented, eliminated, or reduced to acceptable levels.

Critical limit. The maximum or minimum value to which a physical, biological, or chemical hazard must be controlled at a critical control point to prevent, eliminate, or reduce to an acceptable level the occurrence of the identified food safety hazard.

Food safety hazard. Any biological, chemical, or physical property that may cause a food to be unsafe for human consumption.

HACCP System. The HACCP plan in operation, including the HACCP plan itself.

Hazard. SEE *Food Safety Hazard.*

Preventive measure. Physical, chemical, or other means that can be used to control an identified food safety hazard.

Process-monitoring instrument. An instrument or device used to indicate conditions during processing at a critical control point.

Responsible establishment official. The individual with overall authority on-site or a higher level official of the establishment.

§ 417.2 Hazard Analysis and HACCP Plan.

(a) *Hazard analysis.* (1) Every official establishment shall conduct, or have conducted for it, a hazard analysis to determine the food safety hazards reasonably likely to occur in the production process and identify the preventive measures the establishment can apply to control those hazards. The hazard analysis shall include food safety hazards that can occur before, during, and after entry into the establishment. A food safety hazard that is reasonably likely to occur is one for which a prudent establishment would establish controls because it historically has occurred, or because there is a reasonable possibility that it will occur in the particular type of product being processed, in the absence of those controls.

(2) A flow chart describing the steps of each process and product flow in the establishment shall be prepared, and the intended use or consumers of the finished product shall be identified.

(3) Food safety hazards might be expected to arise from the following:

(i) Natural toxins;

(ii) Microbiological contamination;

(iii) Chemical contamination;

(iv) Pesticides;

(v) Drug residues;

(vi) Zoonotic diseases;

(vii) Decomposition;

(viii) Parasites;

(ix) Unapproved use of direct or indirect food or color additives; and

(x) Physical hazards.

(b) *The HACCP plan.* (1) Every establishment shall develop and implement a written HACCP plan covering each product produced by that establishment whenever a hazard analysis reveals one or more food safety hazards that are reasonably likely to occur, based on the hazard analysis conducted in accordance with paragraph (a) of this section, including products in the following processing categories:

(i) Slaughter—all species.

(ii) Raw product—ground.

(iii) Raw product—not ground.

(iv) Thermally processed—commercially sterile.

(v) Not heat treated—shelf stable.

(vi) Heat treated—shelf stable.

(vii) Fully cooked—not shelf stable.

(viii) Heat treated but not fully cooked—not shelf stable.

(ix) Product with secondary inhibitors—not shelf stable.

(2) A single HACCP plan may encompass multiple products within a single processing category identified in this paragraph, if the food safety hazards, critical control points, critical limits, and procedures required to be identified and performed in paragraph (c) of this section are essentially the same, provided that any required features of the plan that are unique to a specific product are clearly delineated in the plan and are observed in practice.

(3) HACCP plans for thermally processed/commercially sterile products do not have to address the food safety hazards associated with microbiological contamination if the product is produced in accordance with the requirements of part 318, subpart G, or part 381, subpart X, of this chapter.

(c) *The contents of the HACCP plan.* The HACCP plan shall, at a minimum:

(1) List the food safety hazards identified in accordance with paragraph (a) of this section, which must be controlled for each process.

(2) List the critical control points for each of the identified food safety hazards, including, as appropriate:

(i) Critical control points designed to control food safety hazards that could be introduced in the establishment, and

(ii) Critical control points designed to control food safety hazards introduced outside the establishment, including food safety hazards that occur before, during, and after entry into the establishment;

(3) List the critical limits that must be met at each of the critical control points. Critical limits shall, at a minimum, be designed to ensure that applicable targets or performance standards established by FSIS, and any other requirement set forth in this chapter pertaining to the specific process or product, are met;

(4) List the procedures, and the frequency with which those procedures will be performed, that will be used to monitor each of the critical control points to ensure compliance with the critical limits;

(5) Include all corrective actions that have been developed in accordance with § 417.3(a) of this part, to be followed in response to any deviation from a critical limit at a critical control point; and

(6) Provide for a recordkeeping system that documents the monitoring of the critical control points. The records shall contain the actual values and observations obtained during monitoring.

(7) List the verification procedures, and the frequency with which those procedures will be performed, that the establishment will use in accordance with § 417.4 of this part.

(d) *Signing and dating the HACCP plan.* (1) The HACCP plan shall be signed and dated by the responsible establishment individual. This signature shall signify that the establishment accepts and will implement the HACCP plan.

(2) The HACCP plan shall be dated and signed:

(i) Upon initial acceptance;

(ii) Upon any modification; and

(iii) At least annually, upon reassessment, as required under § 417.4(a)(3) of this part.

(e) Pursuant to 21 U.S.C. 608 and 621, the failure of an establishment to develop and implement a HACCP plan that complies with this section, or to operate in accordance with the requirements of this part, may render the products produced under those conditions adulterated.

§ 417.3 Corrective actions.

(a) The written HACCP plan shall identify the corrective action to be followed in response to a deviation from a critical limit. The HACCP plan shall describe the corrective action to be taken, and assign responsibility for taking corrective action, to ensure:

(1) The cause of the deviation is identified and eliminated;

(2) The CCP will be under control after the corrective action is taken;

(3) Measures to prevent recurrence are established; and

(4) No product that is injurious to health or otherwise adulterated as a result of the deviation enters commerce.

(b) If a deviation not covered by a specified corrective action occurs, or if another unforeseen hazard arises, the establishment shall:

(1) Segregate and hold the affected product, at least until the requirements of paragraphs (b)(2) and (b)(3) of this section are met;

(2) Perform a review to determine the acceptability of the affected product for distribution;

(3) Take action, when necessary, with respect to the affected product to ensure that no product that is injurious to health or otherwise adulterated, as a result of the deviation, enters commerce;

(4) Perform or obtain reassessment by an individual trained in accordance with § 417.7 of this part, to determine whether the newly identified deviation or other unforeseen hazard should be incorporated into the HACCP plan.

(c) All corrective actions taken in accordance with this section shall be documented in records that are subject to verification in accordance with § 417.4(a)(2)(iii) and the recordkeeping requirements of § 417.5 of this part.

§ 417.4 Validation, Verification, Reassessment.

(a) Every establishment shall validate the HACCP plan's adequacy in controlling the food safety hazards identified during the hazard analysis, and shall verify that the plan is being effectively implemented.

(1) *Initial validation.* Upon completion of the hazard analysis and development of the HACCP plan, the establishment shall conduct activities designed to determine that the HACCP plan is functioning as intended. During this HACCP plan validation period, the establishment shall repeatedly test the adequacy of the CCP's, critical limits, monitoring and recordkeeping procedures, and corrective actions set forth in the HACCP plan. Validation also encompasses reviews of the records themselves, routinely generated by the HACCP system, in the context of other validation activities.

(2) *Ongoing verification activities.* Ongoing verification activities include, but are not limited to:

(i) The calibration of process-monitoring instruments;

(ii) Direct observations of monitoring activities and corrective actions; and

(iii) The review of records generated and maintained in accordance with § 417.5(a)(3) of this part.

(3) *Reassessment of the HACCP plan.* Every establishment shall reassess the adequacy of the HACCP plan at least annually and whenever any changes occur that could affect the hazard analysis or alter the HACCP plan. Such changes may include, but are not limited to, changes in: raw materials or source of raw materials; product formulation; slaughter or processing methods or systems; production volume; personnel; packaging; finished product distribution systems; or, the intended use or consumers of the finished product. The reassessment shall be performed by an individual trained in accordance with § 417.7 of this part. The HACCP plan shall be modified immediately whenever a reassessment reveals that the plan no longer meets the requirements of § 417.2(c) of this part.

(b) *Reassessment of the hazard analysis.* Any establishment that does not have a HACCP plan because a hazard analysis has revealed no food safety hazards that are reasonably likely to occur shall reassess the adequacy of the hazard analysis whenever a change occurs that could reasonably affect whether a food safety hazard exists. Such changes may include, but are not limited to, changes in: raw materials or source of raw materials; product formulation; slaughter or processing methods or systems; production volume; packaging; finished product distribution systems; or, the intended use or consumers of the finished product.

§ 417.5 Records.

(a) The establishment shall maintain the following records documenting the establishment's HACCP plan:

(1) The written hazard analysis prescribed in § 417.2(a) of this part, including all supporting documentation;

(2) The written HACCP plan, including decisionmaking documents associated with the selection and development of CCP's and critical limits, and documents supporting both the monitoring and verification procedures selected and the frequency of those procedures.

(3) Records documenting the monitoring of CCP's and their critical limits, including the recording of actual

times, temperatures, or other quantifiable values, as prescribed in the establishment's HACCP plan; the calibration of process-monitoring instruments; corrective actions, including all actions taken in response to a deviation; verification procedures and results; product code(s), product name or identity, or slaughter production lot. Each of these records shall include the date the record was made.

(b) Each entry on a record maintained under the HACCP plan shall be made at the time the specific event occurs and include the date and time recorded, and shall be signed or initialed by the establishment employee making the entry.

(c) Prior to shipping product, the establishment shall review the records associated with the production of that product, documented in accordance with this section, to ensure completeness, including the determination that all critical limits were met and, if appropriate, corrective actions were taken, including the proper disposition of product. Where practicable, this review shall be conducted, dated, and signed by an individual who did not produce the record(s), preferably by someone trained in accordance with § 417.7 of this part, or the responsible establishment official.

(d) *Records maintained on computers*. The use of records maintained on computers is acceptable, provided that appropriate controls are implemented to ensure the integrity of the electronic data and signatures.

(e) *Record retention*. (1) Establishments shall retain all records required by paragraph (a)(3) of this section as follows: for slaughter activities for at least one year; for refrigerated product, for at least one year; for frozen, preserved, or shelf-stable products, for at least two years.

(2) Off-site storage of records required by paragraph (a)(3) of this section is permitted after six months, if such records can be retrieved and provided, on-site, within 24 hours of an FSIS employee's request.

(f) *Official review*. All records required by this part and all plans and procedures required by this part shall be available for official review and copying.

§ 417.6 Inadequate HACCP Systems.

A HACCP system may be found to be inadequate if:

(a) The HACCP plan in operation does not meet the requirements set forth in this part;

(b) Establishment personnel are not performing tasks specified in the HACCP plan;

(c) The establishment fails to take corrective actions, as required by § 417.3 of this part;

(d) HACCP records are not being maintained as required in § 417.5 of this part; or

(e) Adulterated product is produced or shipped.

§ 417.7 Training.

(a) Only an individual who has met the requirements of paragraph (b) of this section, but who need not be an employee of the establishment, shall be permitted to perform the following functions:

(1) Development of the HACCP plan, in accordance with § 417.2(b) of this part, which could include adapting a generic model that is appropriate for the specific product; and

(2) Reassessment and modification of the HACCP plan, in accordance with § 417.3 of this part.

(b) The individual performing the functions listed in paragraph (a) of this section shall have successfully completed a course of instruction in the application of the seven HACCP principles to meat or poultry product processing, including a segment on the development of a HACCP plan for a specific product and on record review.

§ 417.8 Agency verification.

FSIS will verify the adequacy of the HACCP plan(s) by determining that each HACCP plan meets the requirements of this part and all other applicable regulations. Such verification may include:

(a) Reviewing the HACCP plan;

(b) Reviewing the CCP records;

(c) Reviewing and determining the adequacy of corrective actions taken when a deviation occurs;

(d) Reviewing the critical limits;

(e) Reviewing other records pertaining to the HACCP plan or system;

(f) Direct observation or measurement at a CCP;

(g) Sample collection and analysis to determine the product meets all safety standards; and

(h) On-site observations and record review.

Done at Washington, DC, on: July 5, 1996.

Michael R. Taylor,

Acting Under Secretary for Food Safety.

The following are appendices to the preamble of the Final Rule.

Note: The following appendices will not appear in the Code of Federal Regulations.

Appendix A—Guidelines for Developing a Standard Operating Procedure for Sanitation (Sanitation SOP's) in Federally Inspected Meat and Poultry Establishments

I. Introduction

Foodborne illness is a significant public health problem in the United States. While data on illness associated with meat and poultry products are limited, data from various sources suggest that foodborne microbial pathogens may cause up to 7 million cases of illness each year, and 7,000 deaths. Of these, nearly 5 million cases of illness and more than 4,000 deaths may be associated with meat and poultry products.

FSIS is pursuing a broad and long-term science-based strategy to improve the safety of meat and poultry products to better protect public health. FSIS is undertaking steps to improve the safety of meat and poultry throughout the food production, processing, distribution, and marketing chain. The Agency's goal is to reduce the risk to public health of consuming meat and poultry products by reducing pathogenic microbial contamination. The FSIS strategy relies heavily on building the principle of prevention into production processes.

Sections 308.7, 381.57 and 381.58 of the Meat and Poultry Inspection Regulations require that rooms, compartments, equipment, and utensils used for processing or handling meat or poultry in a federally inspected establishment must be kept clean and in a sanitary condition. Establishments are responsible for sanitation of facilities, equipment and utensils.

Sanitation maintains or restores a state of cleanliness, and promotes hygiene for the prevention of foodborne illness. Sanitation encompasses many areas and functions of an establishment, even when not in production. However, there are certain sanitary procedures that must be addressed and maintained on a daily basis to prevent direct product contamination or adulteration. Good sanitation is essential in these areas to maintaining a safe food production process.

FSIS is requiring meat and poultry establishments to develop and implement a written Standard Operating Procedure for sanitation (Sanitation SOP's) which addresses these areas. An establishment's adherence to its written Sanitation SOP will demonstrate knowledge of and commitment to sanitation and production of safe meat and poultry products.

New part 416 to the Meat and Poultry Inspection Regulations requires that a written Sanitation SOP contain

established procedures to be followed routinely to maintain a sanitary environment for producing safe and unadulterated food products. Plant management must develop a Sanitation SOP that describes daily sanitation procedures to be performed by the establishment. A designated establishment employee(s) must monitor the Sanitation SOP and document adherence to the SOP and any corrective actions taken to prevent direct product contamination or adulteration. This written documentation must be available to FSIS program employees.

These FSIS guidelines should help federally inspected meat or poultry establishments develop, implement and monitor written Sanitation SOPs.

The Sanitation SOP developed by the establishment must detail daily sanitation procedures it will use before (pre-operational sanitation) and during (operational sanitation) operation to prevent direct product contamination or adulteration. FSIS program employees will verify an establishment's adherence to its Sanitation SOP and will take appropriate action when there is noncompliance.

These guidelines, where applicable, are for:

- Livestock Slaughter and/or Processing Establishments
- Poultry Slaughter and/or Processing Establishments
- Import Inspection Establishments
- Identification Warehouses

The establishment should update the Sanitation SOP to reflect changes in equipment and facilities, processes, new technology, or designated establishment employees.

II. Pre-operational Sanitation

Established procedures of pre-operational sanitation must result in clean facilities, equipment and utensils prior to starting production. Clean facilities, equipment, and utensils are free of any soil, tissue debris, chemical or other injurious substance that could contaminate a meat or poultry food product. Pre-operational sanitation established procedures shall describe the daily, routine sanitary procedures to prevent direct product contamination or adulteration. The sanitary procedures must include the cleaning of product contact surfaces of facilities, equipment and utensils to prevent direct product contamination or adulteration. The following additional sanitary procedures for pre-operational sanitation might include:

- Descriptions of equipment disassembly, reassembly after cleaning, use of acceptable chemicals according to label directions, and cleaning techniques.
- The application of sanitizers to product contact surfaces after cleaning. Sanitizers are used to reduce or destroy bacteria that may have survived the cleaning process.

III. Operational Sanitation

All federally inspected establishments must describe daily, routine sanitary procedures that the establishment will conduct during operations to prevent direct product contamination or adulteration. Established procedures for operational sanitation must result in a sanitary environment for preparing, storing, or handling any meat or poultry food product in accordance with sections 308/381 of the Meat and Poultry Inspection Regulations. Established procedures during operations might include, where applicable:

- Equipment and utensil cleaning—sanitizing—disinfecting during production, as appropriate, at breaks, between shifts, and at midshift cleanup.
- Employee hygiene: includes personal hygiene, cleanliness of outer garments and gloves, hair restraints, hand washing, health, etc.
- Product handling in raw and in cooked product areas.

The established sanitary procedures for operational sanitation will vary with the establishment. Establishments with complex processing need additional sanitary procedures to ensure a sanitary environment and to prevent cross contamination. Establishments that do not slaughter or process (such as an Import Inspection facility) should develop established sanitary procedures specific to that facility.

IV. Implementing and Monitoring of the Sanitation SOP

The Sanitation SOP shall identify establishment employee(s) (positions rather than specific names of employees) responsible for the implementation and maintenance of the Sanitation SOP. Employee(s) are to be identified to monitor and evaluate the effectiveness of the Sanitation SOP and make corrections when needed. The evaluation can be performed by using one or more of the following methods: (1) organoleptic (sensory—e.g., sight, feel, smell); (2) chemical (e.g., checking the chlorine level); (3) microbiological (e.g., microbial swabbing and culturing of product contact surfaces of equipment or utensils).

Establishments might specify the method, frequency, and recordkeeping processes associated with monitoring. Pre-operational sanitation monitoring should, at a minimum, evaluate and document the effective cleaning of all direct product contact facilities, equipment, and/or utensils that are to be used at the start of production. Operational sanitation monitoring should, at a minimum, document adherence to the SOP, including actions that identify and correct instances or circumstances of direct product contamination which occur from environmental sources (facilities, equipment, pests, etc.) or employee practices (personal hygiene, product handling, etc.). All establishment records of pre-operational and operational sanitation monitoring, including corrective actions to prevent direct product contamination or adulteration, must be maintained by the establishment for at least six months, and be made available to FSIS program employees. After 48 hours, they may be maintained off-site.

V. Corrective Actions

When deviations occur from the established sanitary procedures within the Sanitation SOP, the establishment must take corrective actions to prevent direct product contamination or adulteration. Instructions should be provided to employees and management officials for documenting corrective actions. The actions must be recorded.

Appendix B—Model of a Standard Operating Procedure for Sanitation

Hill-Top Meats has prepared a written Standard Operating Procedure (SOP) for Sanitation. Let's look at the Sanitation SOP and discuss its attributes (guidance and advice are inside the boxes).

Hill-Top Meats, Est. 38, Anytown, U.S.A. is a slaughter and medium processing establishment. This plant receives live cattle for slaughter and dressing and processes the carcasses into chubs of ground beef, roast beef, and ready to eat beef products.

> This introductory information is not a regulatory requirement but identifies the type of establishment and its production. The information will help FSIS personnel, who are not familiar with the establishment, review the Sanitation SOP.

Management structure is as follows:

President—Joe Doe
Slaughter Manager—Ken Smith
Processing Manager—Susan Jones
Quality Control (QC) Manager—Gwen Summers
Sanitation Manager—Carl Anderson

The QC Manager is responsible for implementing and daily monitoring of the Sanitation SOP and recording the findings and any corrective actions. The

Slaughter, Processing and Sanitation Managers are responsible for training and assigning specific duties to other employees and monitoring their performance within the Sanitation SOP.

All records, data, checklists and other information pertaining to the Sanitation SOP will be maintained on file and made available to FSIS program employees.

> The identification of establishment personnel (positions rather than specific names of employees) responsible for implementing, maintaining, monitoring and records associated with the Sanitation SOP is a regulatory requirement. All records pertaining to the Sanitation SOP must be kept on file and made available to FSIS personnel, but it is not necessary to make that statement.

Sanitation SOP for EST. 38

I. Preoperational Sanitation—Equipment and Facility Cleaning Objective

All equipment will be cleaned and sanitized prior to starting production.

A. General Equipment Cleaning. (Simple equipment and hand tools are cleaned and sanitized in the same manner but they do not require disassembly and reassembly.)

1. Established Sanitary Procedures for Cleaning and Sanitizing Equipment:

a. The equipment is disassembled. Parts are placed in the designated tubs, racks, etc.

b. Product debris is removed.

c. Equipment parts are rinsed with water to remove remaining debris.

d. An approved cleaner is applied to parts and they are cleaned according to manufacturers' directions.

e. Equipment parts are rinsed with potable water.

f. Equipment is sanitized with an approved sanitizer, and rinsed with potable water if required.

g. The equipment is reassembled.

h. The equipment is resanitized with an approved sanitizer, and rinsed with potable water if required.

> The established sanitary procedures are daily routine sanitary procedures to prevent direct product contamination or adulteration. Daily routine sanitary procedures to prevent direct product contamination or adulteration are required in the Sanitation SOP; FSIS personnel use them to verify compliance with the Sanitation SOP. The procedures shall be specific for each establishment; however, they can be as detailed as the establishment wants to make them.

2. Implementing, Monitoring and Recordkeeping. The QC Manager performs daily organoleptic sanitation inspection after preoperational equipment cleaning and sanitizing. The results of the inspection are recorded on Establishment Form E–1. If everything is acceptable, the appropriate box is initialed. If corrective actions are needed, such actions are to be documented (see below).

The QC Manager performs daily microbial monitoring for Total Plate Counts (TPCs) after preoperational equipment cleaning and sanitizing. The QC Manager swabs one square inch of a food contact surface on a piece of equipment or hand tool within one hour prior to production. The samples are plated and incubated at 35° C. for 48 hours. Colonies are counted and recorded as number of colony forming units (CFU) per square inch of surface swabbed. Daily microbial counts are documented on Establishment Form M–1.

3. Corrective Actions.

a. When the QC Manager determines that the equipment or hand tools do not pass organoleptic examination, the cleaning procedure and reinspection are repeated. The Sanitation Manager monitors the cleaning of the equipment or hand tools and retrains sanitation crew employees, if necessary. Corrective actions are recorded on Establishment Form E–1.

b. If microbial counts exceed ____ CFUs/sq. in., the QC Manager notifies the Sanitation Manager and attempts to determine the cause of the high count (for example, cleaning procedures varied, new people cleaned the equipment, sanitizer not applied). If microbial counts remain high for several days, the QC Manager will confer with the Sanitation Manager. The Sanitation Manager notifies sanitation crew employees and reviews all cleaning and sanitizing procedures and personal hygiene. Microbial counts are recorded on Establishment Form M–1. Corrective actions to prevent direct product contamination or adulteration are documented on Establishment Form E–1.

> The establishment is required to monitor daily routine sanitation activities as described in the Sanitation SOP, the establishment determines the methods and frequency of monitoring. Microbiological sampling is not required, but Hill-Top Meats wants to monitor the effectiveness of the cleaning by daily microbial sampling, in addition to organoleptic monitoring, and has set limits to enable them to take appropriate action when those limits are exceeded. Establishment Forms E–1 and M–1 are used only as examples; no specific forms or form numbers are required. However, establishments must record the daily completion or adherence to the established procedures in the Sanitation SOP, any deviations from regulatory requirements, and corrective actions.

B. Cleaning of Facilities—including floors, walls and ceilings.

1. Cleaning Procedures.

a. Debris is swept up and discarded.

b. Facilities are rinsed with potable water.

c. Facilities are cleaned with an approved cleaner, according to manufacturer's directions.

d. Facilities are rinsed with potable water.

2. Cleaning Frequency.

Floors and walls are cleaned at the end of each production day. Ceilings are cleaned as needed, but at least once a week.

> There is no specific requirement to include facility cleaning in the Sanitation SOP, unless part of the facility could directly contaminate or adulterate product.

3. Establishment Monitoring.

The QC Manager performs daily organoleptic inspection prior to the start of operations. Results are recorded on Establishment Form E–1.

4. Corrective Actions.

When the QC Manager determines that the facilities do not pass organoleptic inspection, the cleaning procedure and reinspection are repeated. The Sanitation Manager monitors the cleaning of facilities and retrains sanitation crew employees if necessary. Corrective actions to prevent direct product contamination or adulteration are recorded on Establishment Form E–1.

II. Operational Sanitation

Objective: Carcass dressing will be performed under sanitary conditions and in a manner to prevent contamination of the carcass.

A. Slaughter Operations.

1. Established Methods for Carcass Dressing—

a. Employees will clean hands, arms, gloves, aprons, boots, etc., as often as

necessary during the dressing procedures.

b. Employees will clean and then sanitize with 180° F. water, knives and other hand tools, saws and other equipment, as often as necessary during the dressing procedures to prevent contamination of the skinned carcass.

c. The brisket saw is sanitized between carcasses using 180° F. water.

d. Eviscerating employees will maintain clean hands, arms, clothes, aprons, boots and knives during the evisceration process. If contamination occurs, the employee is required to step away from the evisceration table onto a side platform to clean and sanitize apron, boots and knives. It may be necessary to clean hands and arms with soap and water. In cases of contamination from an abscess or other extensive contamination, the employee may need to shower and change clothes before resuming work.

e. The carcass splitting saw is sanitized with 180° F. water after each carcass.

The above methods for carcass dressing are specific for Hill-Top Meats. The establishment considers them to be Good Manufacturing Practices for their type of operation, to prevent direct contamination or adulteration of carcasses. Each establishment determines the sanitary procedures and any requirements they want to detail in their Sanitation SOP.

2. Monitoring and Recordkeeping.

a. The Slaughter Manager is responsible for ensuring that employee hygiene practices, sanitary conditions and cleaning procedures are maintained during a production shift. The QC Manager monitors the sanitation procedures twice during a production shift. Results are recorded on Establishment Form E–1.

b. A Microbiological Control and Monitoring Program is used to determine the level of bacteria on product contact surfaces of equipment (e.g., knives, hand tools, evisceration table, etc.) and outer garments (such as aprons and gloves) during production. The QC Manager performs daily microbial monitoring for Total Plate Counts (TPCs). The samples are plated and incubated at 35°C. for 48 hours. Colonies are counted and recorded as number of colony forming units (CFU) per square inch of surface swabbed. Daily microbial counts are documented on Establishment Form M–1.

3. Corrective Actions.

a. When equipment is visibly contaminated, contaminants are removed by cleaning and sanitizing equipment prior to resuming production. The Slaughter Manager attempts to determine the cause of the contamination and takes corrective action. This may require adjusting equipment, retraining employees, temporarily stopping or slowing the line speed, etc. Corrective actions are recorded on Establishment Form E–1.

b. If microbial counts from equipment swabbing exceed the action level set, the QC Manager notifies the Slaughter Manager. The Slaughter Manager attempts to determine the cause (for example, new people not adequately trained, equipment not adjusted properly) and takes corrective action. If microbial counts remain above established limits for several days, the QC Manager confers with the Slaughter Manager and all slaughter operations are reviewed. The Slaughter Manager notifies the slaughter employees and reviews personal hygiene, equipment adjustment, and sanitary handling procedures. Corrective actions to prevent direct product contamination or adulteration are recorded on Establishment Form E–1.

The establishment is required to monitor the regulatory daily sanitation activities as described in its Sanitation SOP, but each establishment determines its own methods for monitoring, the frequency of monitoring, and the corrective actions to include in the Sanitation SOP. Records must be kept on daily completion of the established procedures, deviations, and corrective actions.

B. Processing Operations.

Objective: Processing is performed under sanitary conditions to prevent direct and cross contamination of food products.

1. Established Sanitary Procedures for Processing—

a. Employees clean and sanitize hands, gloves, knives, wizard knives, other hand tools, cutting boards, etc., as necessary during processing to prevent contamination of food products.

b. All equipment, belt conveyors, tables, and other product contact surfaces are cleaned and sanitized throughout the day as needed.

c. Employees take appropriate precautions when going from a raw product area to a cooked product area, to prevent cross contamination of cooked products. Employees change outer garments, wash hands and sanitize hands with an approved hand sanitizer (sanitizer is equivalent to 50 ppm chlorine), put on clean gloves for that room and step into a boot sanitizing bath on leaving and entering the respective rooms.

d. Raw and cooked processing areas are separate. There is no cross utilization of equipment between raw and cooked products.

e. Outer garments, such as aprons, smocks and gloves, are identified and designated specifically for either the raw processing rooms or the cooked processing rooms. Blue is designated for raw processing rooms and orange for cooked processing rooms. The outer garments are hung in designated locations when an employee leaves each room. Outer garments are maintained in a clean and sanitary manner and are changed at least daily and, if necessary, more often.

Establishments with processing will determine their own established sanitary procedures in the Sanitation SOP and any establishment requirements. Hill-Top Meats considers its established procedures for processing to be Good Manufacturing Practices.

2. Monitoring and Recordkeeping.

a. The Processing Manager is responsible for ensuring that employee hygiene practices, employee and product traffic patterns, sanitary product handling procedures, and cleaning procedures are maintained during a production shift. The QC Manager monitors the sanitation procedures twice during a production shift. Results are recorded on Establishment Form P–1.

b. A Microbiological Control and Monitoring Program is used to determine and control the level of bacteria on both raw and cooked product contact surfaces during production. Once a day, the QC Manager performs Microbial Monitoring for Total Plate Counts (TPCs). The QC Manager swabs one square inch on a product contact surface from each of three randomly selected pieces of equipment in each raw product room and cooked product room.

Note: The samples are taken from the *cooked product rooms first* and then from the raw product rooms. The samples are plated and incubated at 35° C. for 48 hours. Colonies are counted and recorded as number of colony forming units (CFU) per square inch of surface swabbed. Microbial counts are documented on Establishment Form M–1.

3. Corrective Actions.

a. When the QC Manager identifies sanitation problems, the QC Manager notifies the Processing Manager. The Processing Manager stops production, if necessary, and notifies processing employees to take appropriate action to correct the sanitation problems. If necessary, processing employees are retrained. Corrective actions are recorded on Establishment Form P–1.

If microbial counts exceed the action level set for each piece of equipment for the specific product in that production line, the QC Manager notifies the Processing Manager. The Processing Manager attempts to determine the cause (for example, new people going back and forth between the raw and cooked rooms, gloves not being changed regularly) and takes corrective action. Additional daily microbial sampling is done on any equipment that showed high microbial counts, until the counts fall below the action level. If microbial counts remain high for several days, the QC Manager confers with the Processing Manager and Sanitation Manager to review all operations that impact that equipment. The Processing Manager notifies the processing employees and reviews personal hygiene and sanitary product handling procedures. Corrective actions are recorded on Establishment Form P–1.

The monitoring and corrective actions are specific for Hill-Top Meats only. Microbial sampling and monitoring are not required for product contact surfaces. Each establishment determines its own procedures for monitoring and the frequency of monitoring to include in its Sanitation SOP.

Appendix C—Guidebook for the Preparation of HACCP Plans

Preface

The Hazard Analysis Critical Control Points (HACCP) system is a logical, scientific system that can control safety problems in food production. HACCP is now being adopted worldwide. It works with any type of food production system and with any food. It works by controlling food safety hazards throughout the process. The hazards can be biological, chemical, or physical.

This guidebook was developed to help meat and poultry establishments prepare HACCP plans. The steps to developing a HACCP plan can be used by all establishments, large or small, complex or simple. The guidebook identifies additional sources of information, so that small operators won't have to ''go it alone.''

The forms shown in this guidebook are examples only. Think of this as a self-help guide or a do-it-yourself manual. There are many ways to get to the final product—a good HACCP plan. So, choose the examples that work best in your establishment.

The guidebook can be used to complement HACCP training. You may also wish to use it in conjunction with a video about HACCP. The guidebook will provide the basics. When you are ready to move on, there are more specialized documents. FSIS is also publishing the *Meat and Poultry Products Hazards and Controls Guide*. It explains in detail the biological, chemical, and physical hazards that can occur at different steps of meat and poultry slaughter and processing and provides some examples of controls for those hazards. In addition, there will be a series of Generic Models for different meat and poultry processes, to be used as examples. You will probably want to look at the models for processes that you use in your establishment. There will be model plans for the following 13 processes:

Raw, Ground
Raw, Other
All Other Shelf-Stable, Heat Treated
Fully Cooked, Non-Shelf Stable
All Other Shelf-Stable, Not Heat Treated
All Non-Shelf Stable, Heat Treated, Not Fully Cooked
Non-Shelf Stable with Secondary Inhibitors
Thermally Processed/Commercially Sterile
Swine Slaughter
Poultry Slaughter
Beef Slaughter
Irradiation
Mechanically Separated Species

Developing a HACCP Plan

The Hazard Analysis and Critical Control Points (HACCP) System is a logical, scientific approach to controlling safety problems in food production. When a company adopts HACCP, it puts controls in place at each point in the production system where safety problems could occur from biological, chemical, or physical hazards. To start a HACCP system, a company must first write a HACCP plan. This guidebook explains how to write a HACCP plan in five preparatory steps and then the seven HACCP principles.

The five ''pre-HACCP'' steps in this guidebook are:

1. Bring together your HACCP resources.
2. Describe the product and its method of distribution.
3. Develop a complete list of ingredients and raw materials used in the product.
4. Develop a process flow diagram.
5. Meet the regulatory requirements for Sanitation Standard Operating Procedures (SOPs).

Applying the seven HACCP principles makes up the major steps to writing a HACCP plan. They are:

1. Conduct a hazard analysis.
2. Identify critical control points.
3. Establish critical limits for each critical control point.
4. Establish monitoring procedures.
5. Establish corrective actions.
6. Establish recordkeeping procedures.
7. Establish verification procedures.

As you read this guidebook and look at the examples, the process for writing a HACCP plan should become clearer. This first section of the guidebook explains the five ''pre-HACCP'' steps. The next seven sections cover each of the HACCP principles that you will need to follow to develop a HACCP plan.

Pre-HACCP Step 1—Bring Together Your HACCP Resources

The first step is to assemble your HACCP resources. When a company develops a HACCP plan, it is important to bring as much knowledge to the table as possible. Actually, you probably have access to more HACCP resources than you think! With a small establishment, this might mean bringing together one or two employees, one of whom has had HACCP training. Your HACCP resources may include outside expertise. You can get this expertise through your local Extension Office, a trade or professional association, or a contractor of your choice. A larger plant may wish to bring in employees from a number of departments, such as production, sanitation, quality control, and engineering, as well as employees directly involved in daily processing activities. There is no magic number of employees needed to write a HACCP plan. It could be one employee or, in a very large company, it could be seven or eight people.

Your employee or employees writing the HACCP plan should understand some basic things about your establishment: The technology and equipment used in your processing lines; the practical aspects of food operations; and the flow of the process in your plant. It will be a bonus for your HACCP plan if those employees have some knowledge of the applied aspects of food microbiology and of HACCP principles and techniques, although this knowledge can be supplemented by outside experts.

Pre-HACCP Step 2—Describe the Product and Its Method of Distribution

The second step is to describe completely each food product that your plant makes. This will help identify hazards that may exist either in the ingredients or in the packaging materials.

To describe your product, you might ask the following questions about the product:

1. Common name?

For example, a cooked sausage could be called franks/hot dogs/wieners.

2. How is it to be used?

Categories might include: Ready-to-eat, to be heated prior to consumption, or for further processing.

3. The type of package?

For example, is it modified atmosphere packaging?

4. Length of shelf life?

In the cooked sausage example, the length of shelf life might be 30 to 50 days for modified atmospheric packaging.

5. Where will it be sold?

For example, will it be sold to wholesale, retail or institutions?

6. Labeling instructions?

''Keep Refrigerated'' would be a common labeling instruction for meat and poultry products.

7. Is special distribution control needed?

For instance, should the product be kept refrigerated at or below 40°F? Below is a blank Product Description Form. It is an example. You may take it and tailor it to your own establishment.

Below is an example of a Product Description Form filled in for cooked sausage. The HACCP Generic Models developed for 13 different processes will give you more samples of product descriptions.

Pre-HACCP Step 3—Develop a Complete List of Ingredients and Raw Materials

The third step is to develop a written list of ingredients and raw materials for each process/product. You can write this on a very simple form, as shown below. You may wish to divide the ingredients into just two categories: Meat (meat such as boneless beef or chicken parts with skin) and Other Ingredients (such as spices and preservatives). Below is a sample Product and Ingredients Form for chunked and formed, breaded chicken patties. Again, these forms are only examples to get you started. You may wish to have more elaborate forms for your establishment. The important thing is to list all ingredients that go into each product!

Pre-HACCP Step 4—Develop a Process Flow Diagram

The next step is to construct a process flow diagram that identifies all the steps used to prepare the product, from receiving through final shipment. The diagram should not be so complex that it is difficult to follow and understand, but must be complete from the beginning of your process to the end.

You will want to verify the process flow diagram. You do this by actually walking through the plant to make sure that the steps listed on the diagram describe what really occurs in producing the product.

A blank process flow diagram is shown below. It is a very simple form on which you may want to draw the flow freehand. If you have a computer, you can make a fancier form, with arrows leading from step to step.

BILLING CODE 3410–DM–P

PRODUCT(S) DESCRIPTION

PRODUCT:

THE FOLLOWING QUESTIONS NEED TO BE ANSWERED WHEN DEVELOPING THE PRODUCT DESCRIPTION:

1. **COMMON NAME?**

2. **HOW IS IT TO BE USED?**

3. **TYPE OF PACKAGE?**

4. **LENGTH OF SHELF LIFE, AT WHAT TEMPERATURE?**

5. **WHERE WILL IT BE SOLD?**

6. **LABELING INSTRUCTIONS?**

7. **IS SPECIAL DISTRIBUTION CONTROL NEEDED?**

DATE:_____ **APPROVED BY:**_____

PRODUCT(S) DESCRIPTION

PRODUCT: Cooked sausage

THE FOLLOWING QUESTIONS NEED TO BE ANSWERED WHEN DEVELOPING THE PRODUCT DESCRIPTION:

1.	COMMON NAME?	Franks, Hot dogs, Wieners
2.	HOW IS IT TO BE USED?	Heat and eat, Ready-to-eat
3.	TYPE OF PACKAGE?	Atmospheric packed, Vacuum packed; Modified Atmospheric packed
4.	LENGTH OF SHELF LIFE, AT WHAT TEMPERATURE?	Atmospheric - 12 to 20 days, Vacuum - 30-60 days, Modified atmosphere - 30-50 days
5.	WHERE WILL IT BE SOLD?	Retail; HRI
6.	LABELING INSTRUCTIONS?	Keep Refrigered, Fully Cooked Code Date
7.	IS SPECIAL DISTRIBUTION CONTROL NEEDED?	Keep Refrigerated at or below 40°F.

DATE: April 15, 1996 **APPROVED BY:** J. M. MacIntosh

PRODUCT AND INGREDIENTS

PRODUCT:

DATE: _____ APPROVED BY: _____

PRODUCT AND INGREDIENTS

PRODUCT: CHUNKED AND FORMED, BREADED CHICKEN PATTIE

MEAT

CHICKEN

OTHER INGREDIENTS

SPICES
PHOSPHATES
BROTH
SALT
BREADING

DATE: June 21, 1996 **APPROVED BY:** Jean Dumouchel

An example of a Process Flow Diagram for cooked sausage is shown below. The employees in this case chose to construct a flow diagram for the meat and poultry ingredients, another one for the non-meat ingredients, and a third flow diagram for supplies such as packaging materials. You will find more examples of process flow diagrams for specific products in the HACCP Generic Models.

Remember, the purpose of this diagram is to find any places in your specific establishment where hazards could occur. As with all HACCP planning forms, the approving employee should sign and date the form, for your records.

Pre-HACCP Step 5—Meet the Regulatory Requirements for Sanitation Standard Operating Procedures

Good sanitation is one of the most basic ways to ensure that you produce safe products. Maintaining good sanitation serves as an excellent and necessary foundation for building your HACCP plan. It also demonstrates that you have the commitment and resources to successfully implement your HACCP plan. Because it is so important, meeting the regulatory requirements for Sanitation Standard Operating Procedures (SOPs) is a pre-HACCP requirement that must be carried out in all establishments. A separate guide and a model Sanitation SOP have been prepared and are available to help you with this activity.

Now you are ready to apply the seven principles that will produce a HACCP plan suited to your plant and your products. Those principles and how to carry them out will be discussed in detail in the next seven sections of this guidebook.

PROCESS FLOW DIAGRAM

PRODUCT(S):

DATE:_____ **APPROVED BY:**_____

PROCESS FLOW DIAGRAM

PRODUCT(S): Cooked sausage

Meat/Poultry	Non-meat Ingredients	Supplies
↓	↓	↓
Storage	Storage	Storage
↓	↓	
Meat prep (Tempering, Grinding, Flaking, Dumping, etc.)	Non-meat ingredient compounding	
	↓	
	Pre-blend formulation, staging (rework)	
	↓	
	Chop and/or blend Emulsify	
	↓	
	Stuff	
	↓	
	Shower	
	↓	
	Cook/Smoke	
	↓	
	Chill/Storage	
	↓	
	Peel	
	↓	
	Package	
	↓	
	Storage	
	↓	
	Shipping/Distribution	

DATE: April 17, 1996 APPROVED BY: J. D. MacIntosh

BILLING CODE 3410–DM–C

Principle 1—Conduct a Hazard Analysis

HACCP Principle No. 1 states:

''Conduct a hazard analysis. Prepare a list of steps in the process where significant hazards occur and describe the preventive measures.''

The regulation defines a food safety hazard as ''Any biological, chemical, or physical property that may cause a food to be unsafe for human consumption.''

This section will define the hazards and discuss in general where they may occur in meat and poultry production. It will then talk about identifying hazards in your establishment.

Finally, this section will explain how you can apply preventive measures to the hazards you have identified, to ensure that the products are safe for consumers. A preventive measure is defined, in the regulation, as ''Physical, chemical, or other means that can be used to control an identified food safety hazard.''

You will find a far more detailed listing of and discussion of hazards in the *Meat and Poultry Products Hazards and Controls Guide*. The generic HACCP models discuss the hazards specific to various meat and poultry processes, such as raw, ground product or swine slaughter. In addition, the References section of this guidebook lists publications which can help you identify hazards.

To identify biological, chemical, or physical hazards likely to occur, you need to know about the chemical, physical, and microbiological characteristics of meat, poultry, and other ingredients, as well as how various processes affect those characteristics. You also need to understand the interactions among ingredients.

You need to evaluate each step in the process flow diagram to determine whether a biological, chemical and/or physical hazard may be introduced at that step and whether preventive measures are available.

Biological Hazards

Biological hazards are living organisms, including microorganisms, that can put human health at risk. Biological hazards include bacteria, parasites, protozoa, viruses, and the like.

Agricultural products and food animals carry a wide range of bacteria. From a public health standpoint, most bacteria are harmless. Others—the pathogenic microorganisms—can cause illness or even death in humans. The numbers and types of bacteria vary from one food or animal species to another, from one geographic region to another, and with production and slaughter or harvesting methods. During production, processing, packaging, transportation, preparation, storage and service, any food may be exposed to bacterial contamination. The most common biological hazards in meat and poultry are microbiological.

Some of the major pathogenic bacterial organisms that can cause foodborne illness from eating meat or poultry are: *Salmonella, Clostridium perfringens, Listeria monocytogenes, Staphylococcus aureus, Campylobacter jejuni, Yersinia enterocolitica, Bacillus cereus, Clostridium botulinum,* and *Escherichia coli* O157:H7.

In the *Meat and Poultry Products Hazards and Controls Guide*, you will find a brief description of the major microorganisms of concern in meat and poultry. Table 1 in that guide describes the temperature and pH ranges and the minimum water activity needed for each organism to grow. Table 4 lists some preventive measures for biological hazards. To thoroughly identify significant biological hazards in your establishment, you need to evaluate each specific ingredient and processing step in your operation.

Chemical Hazards

Chemical hazards may also cause foodborne illnesses.

Chemical hazards fall into two categories:

1. Naturally occurring poisons or deleterious substances are those that are natural constituents of foods and are not the result of environmental, agricultural, industrial, or other contamination. Examples include aflatoxins, mycotoxins, and shellfish toxins.

2. Added poisonous or deleterious substances are those which are intentionally or unintentionally added to foods at some point in growing, harvesting, storage, processing, packing, or distribution. This group of chemicals can include pesticides, fungicides, insecticides, fertilizers, and antibiotics, as well as direct and indirect food additives. This group can also include chemicals such as lubricants, cleaners, paints, and coatings.

To identify any chemical hazards, you first need to identify any chemical residues that might be in the animal. To do this, think about the following:

- The types of drugs and pesticides routinely used in raising the animals which are the source of your meat and poultry ingredients.
- Feeds and supplements fed to the animals.
- Environmental contaminants the animals may have come into contact with. This includes both naturally occurring contaminants and added contaminants.
- Pesticides used on plants that may end up as residues in the animal.
- The source of the water the animals were allowed to drink. You can use the following preventive measures to help ensure that animals entering your establishment are free of harmful residues:
- Require that the animals have been raised in conjunction with the January 1994 FDA Compliance Policy Guidelines.
- Require written assurances from suppliers for each lot of animals, stating that the animals are free of illegal residues.
- Set your own maximum allowable residue limits for specific drugs, pesticides, and environmental contaminants in animal urine or tissues as targets to ensure that FDA and EPA tolerances are met.
- Ensure that trucks used to ship the animals do not have chemical hazards that could contaminate the animals.

Most establishments use chemicals during processing and to keep their operations sanitary. Yet you need to be aware that chemical hazards can occur at any of the following points:

- Prior to receiving chemicals at your establishment.
- Upon receiving chemicals.
- At any point where a chemical is used during processing.
- During storage of chemicals.
- During the use of any cleaning agents, sanitizers, lubricants, or other maintenance chemicals.
- Prior to shipment of the finished product.
- In trucks used to ship finished product.

Some of the measures you can use to prevent chemical hazards are:

- Use only approved chemicals.
- Have detailed product specifications for chemicals entering your plant.
- Maintain letters of guarantee from suppliers.
- Inspect trucks used to ship finished product.
- Properly label and store all chemicals.
- Properly train employees who handle chemicals.

In the *Meat and Poultry Products Hazards and Controls Guide*, Table 5 lists some preventive measures for chemical hazards. For still more information, see the publication *HACCP—Establishing Hazard Analysis Critical Control Point Program*, Food Processors Institute, 1993.

Physical Hazards

A physical hazard is any physical material not normally found in a food which causes illness or injury to the individual using the product. Physical hazards include a variety of foreign materials or objects, such as glass, metal, and plastic. However, foreign objects which cannot cause illness or injury are not hazards, even though they may not be aesthetically pleasing to your customers.

A number of situations can result in physical hazards in finished products. They include, but are not limited to:

- Contaminated raw materials.
- Poorly designed or poorly maintained facilities and equipment. An example would be rust particles and paint chips falling from overhead structures onto exposed product.
- Improper procedures or improper employee training and practices. For example, by using the wrong cutting technique during the cut-up/prefabrication process, employees could cut off and leave pieces of their rubber gloves in the product.

Measures you can take to prevent physical hazards include, but are not limited to:

- Make sure your plant specifications for building design and operation are accurate and updated regularly.
- Make sure your letters of guarantee for ingredients and product supplies are accurate and updated regularly.
- Perform random visual examinations of incoming product and materials.
- Use magnets and metal detectors to help find metal fragments that would be a physical hazard.
- Use stone traps and bone separators to remove these potential physical hazards.
- Keep equipment well maintained.
- Train employees to identify potential problems.

To identify some preventive measures for physical hazards, see Table 6 in the *Meat and Poultry Products Hazards and Controls Guide*.

Conducting a Hazard Analysis

Now that you have some understanding of the types of hazards that can occur and how to identify and prevent them, you are ready to conduct a hazard analysis for each process or product covered in your HACCP plan.

A hazard analysis is the identification of any hazardous biological, chemical, or physical properties in raw materials and processing steps, and an assessment of their likely occurrence and potential to cause food to be unsafe for consumption.

Your hazard analysis needs to be very specific to your establishment and how you make your product, since hazards may vary greatly from one establishment to another. This is due to differences in: sources of ingredients, product formulations, processing equipment, processing methods, duration of the processes and storage, and employee experiences, knowledge, and attitudes.

You also need to review—and perhaps revise—your hazard analysis whenever you make any changes in: raw materials suppliers, product formulation, preparation procedures, processing steps, packaging materials or procedures, distribution or intended use of the product.

Below is a blank Hazard Identification/Preventive Measures form that you may wish to use for your hazard analysis. Below is an example of that form filled in for hazards that might exist in a specific establishment's ground beef process. The form contains space for the process step in which the hazards could occur, the specific hazards, and preventive measures to keep that hazard from occurring. Remember, HACCP is a preventive system.

Steps in Conducting a Hazard Analysis

To conduct a hazard analysis, you need to do the following:

First—Evaluate Your Operation for Hazards

1. Review the product description developed in Pre-HACCP Step 2 and determine how this information could influence your hazard analysis.

2. Look at all product ingredients and incoming materials for the product. You developed this list in Pre-HACCP Step 3.

3. For each processing step identified in the process flow diagram, determine if a biological, chemical or physical hazard(s) could exist at that step.

BILLING CODE 3410–DM–P

HAZARD IDENTIFICATION/PREVENTIVE MEASURES

PRODUCT/PROCESS:

PROCESS STEP	HAZARD	PREVENTIVE MEASURE(S)

DATE: _____ **APPROVED BY:** _____

Biological - B
Chemical - C
Physical - P
Hazard Description

HAZARD IDENTIFICATION/PREVENTIVE MEASURES

PRODUCT/PROCESS: Ground Beef

PROCESS STEP	HAZARD	PREVENTIVE MEASURE(S)
Receiving - Meat	B (Microbial Growth) Insufficient temp. control will result in unacceptable microbial proliferation	Maintain product temperature within specified limits.
	B (Mishandling) Integrity of immediate container compromised such that microbial growth could occur.	Visual inspection to ensure immediate container is not compromised.
	P (Foreign Material) Visible foreign material could compromise product	Visual inspection to ensure no foreign material.
Receiving - Non-meat	C (Deleterious Chemicals) Chemicals/non-meat ingredients/packaging materials are acceptable for this use. Food grade for intended use.	Verify letter of guarantee is on file and appropriate for product use.
	P (Foreign Material) Visible foreign material that could compromise product safety; insects, etc.	Visual inspection to ensure no foreign material is present.

DATE: July 10, 1996 **APPROVED BY:** Jerry Flores

Biological - B
Chemical - C
Physical - P
Hazard Description

[Note: This page represents only the first two process steps; there are several more.]

BILLING CODE 3410–DM–C

4. To help identify hazards, you can ask the following questions at each processing step:

Could contaminants reach the product during this processing step? Possibilities include: worker handling, contaminated equipment or materials, cross-contamination from raw materials, leaking valves or pipes, dead ends, splashing, etc.

Could any pathogens multiply during this process step to the point where they became a hazard? Consider product temperature, hold time, etc.

Could this step create a situation where an ingredient, work in process, or finished product became contaminated with pathogens?

Could this step introduce a chemical hazard into the product?

Could this step introduce a physical hazard into the product?

5. Fully describe the hazards identified for each step.

6. For each incoming ingredient and material, indicate if a biological, chemical and/or physical hazard exists.

7. To help identify hazards, you can ask the following questions about each ingredient:

Could this ingredient contain any pathogenic microorganisms, toxins, chemicals or physical objects?

If it became contaminated or were mishandled, could this ingredient support the growth of pathogenic microorganisms?

Are any hazardous chemicals used in growing, harvesting, processing or packaging the ingredient?

Is this ingredient hazardous if used in excessive amounts?

If this ingredient were left out or used in amounts lower than recommended, could it result in microbial growth?

Are any chemical or physical hazards associated with this ingredient?

8. You can ask the following questions about the product in general:

Have any livestock entering the slaughter establishment been subjected to hazardous chemicals?

Are any returned/reworked products used as ingredients?

If so, could they cause a hazard?

Are preservatives or additives used in the product formulation to kill or inhibit the growth of microorganisms?

Do the amount and type of acid ingredients, and the resulting product pH, affect the growth/survival of microorganisms?

Does the water activity of the finished product affect microbial growth?

Should refrigeration be maintained for products during transit or in storage?

Are any chemical or physical hazards associated with any packaging materials?

9. Fully describe the hazards identified.

Second—Observe the Actual Operating Practices in Your Operation

After describing the hazards you've identified with each step, you should:

1. Observe the actual operation in your establishment and be sure that it is the usual process or practice.

2. Observe employee practices where raw or contaminated product could cross-contaminate workers' hands, gloves or equipment used for finished/post-process products.

3. Observe product handling past any kill step for potential cross-contamination.

For additional information about potential biological, chemical, and physical hazards, you may wish to consult tables 8 through 12 in the *Meat and Poultry Products Hazards and Controls Guide*. They can serve as a guide for identifying potential hazards in ingredients and at various steps in slaughter and processing. However, they do not address every ingredient and every processing step used in the meat and poultry industry.

Preventive Measures

You have identified all significant biological, chemical and physical hazards for each processing step and each ingredient. Now, it is time to identify measures to prevent hazards from compromising the safety of your finished product. Remember, you may not be able to identify a preventive measure for every hazard that you identified. You are ready to fill in the preventive measure(s) column of the Hazard Identification/Preventive Measures Form.

Remember, HACCP defines a preventive measure as ''Physical, chemical, or other means that can be used to control an identified food safety hazard.''

Some examples of preventive measures are:

In beef slaughter, a chemical hazard could result from animals having high levels of drug residues. As a preventive measure, you could test the animals or require letters of guarantee from producers that the animals are free of harmful residues.

In poultry slaughter, the venting, opening and evisceration process could result in a biological hazard from cross contamination by pathogenic microorganisms. Preventive measures for this hazard would be: use Good Manufacturing Practices (GMP's) at all times; properly maintain and operate equipment used to perform these tasks; and rinse food contact surfaces on equipment with chlorinated water between each carcass.

In the grinding step for cooked sausage, a physical hazard could be metal fragments from the grinding equipment. There could be three different preventive measures for this hazard. You could inspect the grinding equipment daily to ensure that it is assembled and operated correctly, is functioning properly, and is not worn or damaged. You could have an employee visually examine the product at the packaging step. Or you could use a metal detector at the packaging step.

In many operations, the packaging step could pose chemical hazards from the packaging materials. A preventive measure could be a letter of guarantee from the supplier that the packaging materials are all food grade.

Once you have identified your preventive measures and written them on your form, you are ready to go on to the next step in developing your HACCP plan. See blank and filled-in forms for preventive measures below.

Principle 2—Identify Critical Control Points

HACCP Principle No. 2 states:

''Identify the Critical Control Points (CCPs) in the process.''

A critical control point (CCP) is defined as ''A point, step, or procedure in a food process at which control can be applied and, as a result, a food safety hazard can be prevented, eliminated, or reduced to acceptable levels.''

So far, in developing your HACCP plan, you have identified biological, chemical, and physical hazards in the raw materials and ingredients you use and in the steps of your process. You've also identified preventive measures, if they exist, for each hazard that you identified. With this information, your next step is to identify the points in the process at which the preventive measures can be applied to prevent, eliminate, or reduce the hazard. Then you can use the CCP Decision Tree to assess each step in the process to determine whether it is a *critical* control point. (Many control points may not be *critical*; often, companies starting out in HACCP identify too many control points.)

Fortunately, a great deal of work has already been done for you in identifying CCPs. Many CCPs are already recognized in various food processing and production systems. Some common CCPs are:

- Chilling.
- Cooking that must occur for a specific time and temperature in order to destroy microbiological pathogens.

- Product formulation controls, such as mixing ground beef and spices to form a meatball.
- Certain processing procedures, such as filling and sealing cans.
- Prevention of cross contamination between raw and cooked product.
- Certain slaughter procedures, such as evisceration.

These are just a few examples of measures that may be CCPs.

There are many more possibilities. Different facilities, preparing the same food, can differ in the number and location of hazards and the points, steps or procedures which are critical control points. This is due, in part, to differences in plant layouts, equipment used, selection and sources of raw materials and ingredients, or the process that is used.

Steps in Identifying Critical Control Points

A good tool for identifying Critical Control Points is the CCP Decision Tree, shown below. The CCP Decision Tree was developed to help companies separate CCPs from other controls. You will get the best results if you use the Decision Tree very methodically and use simple, descriptive, and familiar wording. You should apply the Decision Tree at each step in the process where you have identified a hazard.

You can use the blank Critical Control Point Determination Form, to record the results from your CCP Decision Tree work. Or, you may wish to design your own form. An example of a filled-in Critical Control Point Determination Form for poultry slaughter at one establishment is shown below.

Determining whether a process step is a CCP is really a basic exercise of answering four questions. To use the form and the Decision Tree, follow the next six steps:

1. In Column 1 of the Critical Control Point Determination Form, write in each step in the process where you have identified a hazard.

2. In Column 2, write in the identified hazard(s), indicating whether it is biological, chemical or physical. Then take the information you wrote on your Hazard Identification/Preventive Measures form and answer the following questions for each hazard you identified.

3. Question #1—Do preventive measures exist for the identified hazard?

Note: From a regulatory standpoint, no further action is necessary if the hazard is *not* reasonably likely to occur.

If the answer is yes, write YES and proceed to the next question.

If the answer is no, ask the question ''Is control at this step necessary for safety?''

If control is not necessary at this step in the process, this process step is not a CCP. Write NO in Column 3 and write how and where this hazard will be controlled. Proceed to the next process step and identified hazard you have entered in Columns 1 and 2.

If control is necessary, in Column 3 explain how the step, process or product will be modified to ensure safety.

BILLING CODE 3410–DM–P

CCP DECISION TREE

(Apply at each step of the process with an identified hazard.)

```
Q1.  DO PREVENTIVE MEASURE(S) EXIST FOR THE IDENTIFIED HAZARD?
      ↓            ↓                          ↑
     YES          NO                 MODIFY STEP, PROCESS OR PRODUCT
      ↓            ↓                                                ↑
      ↓           IS CONTROL AT THIS STEP NECESSARY FOR SAFETY?→ YES
      ↓            ↓
      ↓           NO→ NOT A CCP → STOP*

Q2.  DOES THIS STEP ELIMINATE OR REDUCE
     THE LIKELY OCCURRENCE OF A HAZARD
     TO AN ACCEPTABLE LEVEL? → → → → → → → → → → → → → → → → → →
      ↓                                                ↓
     NO                                               YES
      ↓                                                ↓
                                                        ↓
Q3.  COULD CONTAMINATION WITH IDENTIFIED                ↓
     HAZARD (S) OCCUR IN EXCESS OF ACCEPTABLE           ↓
     LEVEL(S) OR COULD THESE INCREASE TO                ↓
     UNACCEPTABLE LEVEL(S)?                             ↓
      ↓            ↓                                   ↓
     YES          NO → NOT A CCP → STOP*               ↓
      ↓                                                 ↓
                                                        ↓
Q4.  WILL A SUBSEQUENT STEP ELIMINATE                   ↓
     IDENTIFIED HAZARD(S) OR REDUCE THE                 ↓
     LIKELY OCCURENCE TO AN ACCEPTABLE                  ↓
     LEVEL?                          ↓                  ↓
      ↓                              ↓                  ↓
     YES → NOT A CCP → STOP*         NO → → → → → → → → CCP
```

* Proceed to the next step in the described process

CCP DETERMINATION

(A CRITICAL CONTROL POINT IS DEFINED AS A POINT, STEP OR PROCEDURE AT WHICH CONTROL CAN BE APPLIED AND A FOOD SAFETY HAZARD CAN BE PREVENTED, ELIMINATED, OR REDUCED TO ACCEPTABLE LEVELS)

PROCESS STEP	HAZARD(S) Biological - B Chemical - C Physical - P Hazard Description	Q1. DO PREVENTIVE MEASURES EXIST FOR THE IDENTIFIED HAZARD(S)? *If no=not a CCP-Identify how and where this hazard will be controlled. * If yes= move to next question.	Q2. DOES THIS STEP ELIMINATE OR REDUCE THE LIKELY OCCURRENCE OF A HAZARD(S) TO AN ACCEPTABLE LEVEL? *If no=move to the next question. *If yes=CCP	Q3. COULD CONTAMINATION WITH IDENTIFIED HAZARD(S) OCCUR IN EXCESS OF ACCEPTABLE LEVELS OR COULD THESE INCREASE TO UNACCEPTABLE LEVELS? *If no=not a CCP. *If yes=move to the next question.	Q4. WILL A SUBSEQUENT STEP ELIMINATE HAZARD(S) OR REDUCE THE LIKELY OCCURRENCE TO AN ACCEPTABLE LEVEL? *If no=CCP. *If yes=not a CCP.	#CCP

DATE: _____ **APPROVED BY:** _____

CCP DETERMINATION

(A CRITICAL CONTROL POINT IS DEFINED AS A POINT, STEP OR PROCEDURE AT WHICH CONTROL CAN BE APPLIED AND A FOOD SAFETY HAZARD CAN BE PREVENTED, ELIMINATED, OR REDUCED TO ACCEPTABLE LEVELS)

PROCESS STEP	HAZARD(S) Biological - B Chemical - C Physical - P Hazard Description	Q1. DO PREVENTIVE MEASURES EXIST FOR THE IDENTIFIED HAZARD(S)? *If no=not a CCP-Identify how and where this hazard will be controlled. * If yes= move to next question.	Q2. DOES THIS STEP ELIMINATE OR REDUCE THE LIKELY OCCURRENCE OF A HAZARD(S) TO AN ACCEPTABLE LEVEL? *If no=move to the next question. *If yes=CCP	Q3. COULD CONTAMINATION WITH IDENTIFIED HAZARD(S) OCCUR IN EXCESS OF ACCEPTABLE LEVELS OR COULD THESE INCREASE TO UNACCEPTABLE LEVELS? *If no=not a CCP. *If yes=move to the next question.	Q4. WILL A SUBSEQUENT STEP ELIMINATE HAZARD(S) OR REDUCE THE LIKELY OCCURRENCE TO AN ACCEPTABLE LEVEL? *If no=CCP. *If yes=not a CCP.	#CCP
Scalding	B-Cross Contamination	Yes	Yes			CCP #3B
	C-None					
	B-None					
Venting Opening Evisceration	B-Cross Contamination. Exposure of opened carcass to enteric pathogens.	Yes	Yes			CCP#4B
	C-None					
	P-None					
Presentation	B-Cross Contamination	Addressed in SOP's				
	C-None					
	P-None					
Off Line Procedures	B-Cross Contamination	Yes	Yes			CCP#5B
	C-None					
	P-None					
Gizzard Harvest	B-Cross Contamination	No - Controlled at giblet rework/chilling				
	C-None					
	B-None					

DATE: June 10, 1996 APPROVED BY: Chen Lu

[Note: This page shows 5 intermediate process steps in a poultry slaughter establishment; this establishment has 16 process steps, from receiving through shipment.]

Once the step, process, or product has been modified, return to Question #1.

4. Question #2—Does this step eliminate or reduce the likely occurrence of the hazard(s) to an acceptable level?

If the answer is yes, write YES in Column 4 and identify the step as a CCP in Column 7.

If the answer is no, write NO in Column 4 and proceed to the next question.

5. Question #3—Could contamination with identified hazard(s) occur in excess of acceptable levels or could these increase to unacceptable levels?

If the answer is yes, write YES in Column 5 and proceed to the next question.

If the answer is no, write NO in Column 5, indicating that the step is not a CCP. Then proceed to the next process step and hazard.

6. Question #4—Will a subsequent step eliminate identified hazard(s) or reduce the likely occurrence to an acceptable level?

If the answer is yes, write YES in Column 6, indicating that the step is not a CCP. Then write down which processing step, which occurs later, will reduce the hazard to acceptable levels. Then proceed to the next process step and hazard.

If the answer is no, write NO in Column 6 and identify the step as a CCP in Column 7.

Principle 3—Establish Critical Limits for Each Critical Control Point

HACCP Principle No. 3 states:

''Establish critical limits for preventive measures associated with each identified CCP.''

The regulation defines critical limit as ''The maximum or minimum value to which a physical, biological, or chemical hazard must be controlled at a critical control point to prevent, eliminate, or reduce to an acceptable level the occurrence of the identified food safety hazard.''

- Critical limits are expressed as numbers, such as:
- Time/temperature
- Humidity
- Water activity
- pH
- Salt concentration
- Chlorine level

You will find that many critical limits for your identified CCPs have already been established. You can find these limits in sources such as regulatory requirements, scientific literature, experimental studies, and through consultation with experts. Some examples of regulatory critical limits for CCPs in meat and poultry production are shown in Table 7 of the *Meat and Poultry Products Hazards and Controls Guide.*

You may wish to establish critical limits that are stricter than regulatory requirements. However, your critical limits must never be less stringent than the requirements.

In some cases, you will need more than one critical limit to control a particular hazard. For example, the critical limits for cooked beef patties are time/temperature, pattie thickness, and conveyor speed.

Below you will find an example of a Critical Limits, Monitoring and Corrective Actions Form. You can use that form, or develop your own, to use in this and the following two sections. You will find an example of that form filled in for swine slaughter in one establishment below. You can find examples of critical limits for specific processes in the HACCP Generic Models.

Steps in Establishing Critical Limits

1. For each identified CCP, determine if there is a regulatory critical limit. If so, write that critical limit—or a more stringent one—into the critical limit column of your form.

For example, the regulatory critical limit for chilled poultry is 40 degrees F. So, for the chilling CCP in poultry slaughter, you would write, in the Critical Limit column of your form: ''Deep breast muscle temperature of ≤40 degrees F. as the carcasses exit the chiller.''

2. If there are no regulatory critical limits for a CCP, you need to establish critical limits for the CCP that are adequate to maintain control and prevent a food safety hazard. That is the responsibility of each establishment. You may wish to obtain the assistance of outside HACCP experts to help you determine critical limits for your CCPs. Once you have identified critical limits, enter them into the critical limit column of your form.

3. You should also file, for future reference, any documentation such as letters from outside HACCP experts or scientific reports supporting the critical limits you have identified. This documentation will help validate that the limits have been properly established. In addition, you should keep on file any test results that show your early experience in implementing the HACCP plan, to demonstrate you can implement what is written and make it work.

BILLING CODE 3410–DM–P

CRITICAL LIMITS, MONITORING AND CORRECTIVE ACTIONS

PRODUCT:

PROCESS STEP/CCP	CRITICAL LIMITS	MONITORING PROCEDURES (WHO/WHAT/WHEN/HOW)	CORRECTIVE ACTIONS

DATE:_____ **APPROVED BY:**_____

CRITICAL LIMITS, MONITORING AND CORRECTIVE ACTIONS

PRODUCT: SWINE SLAUGHTER

PROCESS STEP/CCP	CRITICAL LIMITS	MONITORING PROCEDURES (WHO/WHAT/WHEN/HOW)	CORRECTIVE ACTIONS
SCALDING	USE APPROVED CHEMICAL PER 9CFR318.7 NOT TO EXCEED 2%. SCALD TEMPERATURE RANGE 138°-140°F. CARCASS DWELL TIME SUFFICIENT TO LOOSEN HAIR.	OBSERVE LEVELS OF SUBSTANCES AT TIME OF MIX/ VERIFY TYPE AND SPECIFIC AMOUNT OF CHEMICAL UPON ADDITION TO SCALDER AT DESIGNATED TIME/ PLANT-SPECIFIC PROCEDURE FOR SCALDER (TIME/TEMP) QC SUPERVISOR	AT TIME OF MIX: IDENTIFY/CONTROL PROBLEM WITH FORMULATION/ REFORMULATE, ADJUST AS NECESSARY; AT TIME OF ADDITION TO SCALDER: DRAIN, CLEAN, REFILL SCALDER, ADD PROPER MIX OF CHEMICALS/ CORRECT OR ADJUST PROCEDURE/RECONDITION AFFECTED PRODUCT/ DOCUMENT ACTIONS TAKEN, SIGN RECORD
DEHAIRING/ GAMBRELLING/ SINGEING/ POLISHING/ WASH/ SHAVING	TIME IN DEHAIRER AND EXPOSURE TO SINGEING DETERMINED BY PLANT-SPECIFIC TESTING RESULTS TO REMOVE VISIBLE HAIR TO AN ACCEPTABLE LEVEL WITHOUT BREAKING SKIN.	RANDOM TIME SAMPLING OF EXPOSURE TO DEHAIRER AND SINGEING FLAME UNITS/ MONITORING OF PLANT-SPECIFIC PROCEDURES FLOOR SUPERVISOR	IDENTIFY/CONTROL AFFECTED PRODUCT OR ADJUST PROCEDURE/ RECONDITION PRODUCT/ DOCUMENT ACTIONS TAKEN AND SIGN RECORD.

DATE: May 17, 1996 APPROVED BY: [signature]

[Note: This page represents only two steps in this establishment's swine slaughter process.]

BILLING CODE 3410–DM–C

Principle 4—Establish Monitoring Procedures

HACCP Principle No. 4 states:

''Establish CCP monitoring requirements. Establish procedures for using the results of monitoring to adjust the process and maintain control.''

Monitoring is a planned sequence of observations or measurements to assess whether a CCP is under control and to produce an accurate record for future use in verification.

Monitoring is essential to a HACCP system. Monitoring can warn you if there is a trend towards loss of control, so that you can take action to bring your process back into control before a critical limit is exceeded. For example, say that an establishment tests the pH of a batch of product at 6 a.m., 7 a.m., and 8 a.m. Each time, the pH is within acceptable limits, but it is steadily climbing towards the high end of the range. This information is showing a trend and the establishment should take action to prevent the pH from exceeding the critical limits.

The monitoring procedures you will establish at CCPs will generally relate to on-line processes. Monitoring may be continuous or non-continuous. Continuous monitoring at a CCP usually is done with measuring equipment, such as automatic time-temperature equipment used at a cooking step. Continuous monitoring is better because it results in a permanent record that you can review and evaluate to ensure that the CCP is under control. However, you should regularly check continuous monitoring equipment for accuracy.

You should use non-continuous monitoring procedures when continuous monitoring is not feasible. Non-continuous monitoring can include: visual examinations; monitoring of ingredient specifications; measurements of pH, water activity (Aw), and product temperatures; attribute sampling; and the like. When you use non-continuous monitoring, you need to ensure that the frequency of monitoring is enough to ensure that the hazard is under control and that the monitoring is performed at random times. For instance, each plant needs to set its own times and frequency for checking the cooking time/temperature of products. This may vary from one establishment to another because of differences in plant size, plant layout, the type of product, the length of time for processing, and the product flow.

Each establishment has the responsibility to establish a frequency that ensures that the CCP is under control. In some cases, you may have to perform tests at a CCP or use statistically based sampling.

Monitoring will go much more smoothly if you:

- Clearly identify the employee(s) responsible for monitoring.
- Train the employee(s) monitoring the CCPs in the testing procedures, the critical limits established, the methods of recording test results, and actions to be taken when critical limits are exceeded.
- Ensure that the employee(s) understand the purpose and importance of monitoring.

You can use the Critical Limits, Monitoring and Corrective Actions Form shown below, or you can develop your own form. Below is an example of a form filled in for swine slaughter in one establishment.

Steps in Establishing Monitoring Procedures

You can identify monitoring procedures for your HACCP plan by doing the following:

1. For each CCP, identify the best monitoring procedure.
2. Determine the frequency of monitoring for each CCP.
3. Determine if the monitoring activity needs to be done randomly to get a good representation of the product throughout the day's production. If it does, decide how the random monitoring will be done.
4. Determine what testing procedures need to be done for each monitoring function. For example, will you need to do a chlorine check or a temperature measurement?
5. Identify and train the employee(s) responsible for monitoring.
6. Make sure that the employee doing the monitoring signs all records and documents associated with CCP monitoring. Also make sure that the monitoring results are documented or recorded at the time the monitoring takes place.
7. Enter the above information in the monitoring column of your form.

Principle 5—Establish Corrective Actions

HACCP Principle No. 5 states:

''Establish corrective action to be taken when monitoring indicates that there is a deviation from an established critical limit.''

The regulation defines corrective action as ''Procedures to be followed when a deviation occurs.''

A deviation is a failure to meet a critical limit.

Since HACCP is a preventive system to correct problems before they affect the safety of the food, you have to plan in advance to correct potential deviations from established critical limits. Once your HACCP plan is in place, any time a critical limit is not met, you will need to take corrective actions. Those corrective actions should include:

1. Determining the disposition of non-complying product;
2. Correcting the cause of the non-compliance to prevent a recurrence;
3. Demonstrating that the CCP is once again under control (this means examining the process or product again at that CCP and getting results that are within the critical limits);
4. Maintaining records of the corrective actions.

Under HACCP, you determine in advance what you will do when a critical limit is not met at a CCP. The employee(s) monitoring CCPs should understand this process and be trained to perform the appropriate corrective actions. It is important that an establishment record all corrective actions and that the employee responsible for taking the corrective actions sign all the documentation.

In some cases, the product in question will be held for further investigation of the deviation. This investigation may require a thorough record review, product testing, or consultation with a processing authority.

Some examples of corrective actions are:

- Immediately adjust the process and hold product for further evaluation and disposition.
- Empower employees to stop the line when a deviation occurs, hold all product not in compliance, and call in the plant's quality control manager.
- Rely on an approved alternate process that can be substituted for the one that is out of control at the specific critical control point. For example, if the in-line eviscerators in a poultry slaughter plant are malfunctioning, evisceration can be done by hand as long as Good Manufacturing Practices (GMPs) are followed.

Regardless of the corrective actions you take, you need to keep records that include:

- The deviation that was identified.
- The reason for holding the product; the time and date of the hold; the amount of product involved; the disposition and/or release of product; and the individual who made the disposition decision.
- Actions to prevent the deviation from recurring.

You can use the Critical Limits, Monitoring and Corrective Actions form below or you can develop your own

form. A sample form, filled in for swine slaughter, appears below.

Steps in Establishing Corrective Actions

1. For each CCP, determine the corrective action to take if the critical limits are exceeded. Determine what should be done with the product if a deviation occurs at this step. You may need more than one corrective action for a CCP.

2. Develop the record form to capture all the necessary information on the deviation, and identify the employee responsible for maintaining and signing the record.

3. Ensure that employees conducting the monitoring at each CCP are fully trained and know the corrective actions to take if a deviation occurs.

4. Enter the appropriate corrective action(s) for each CCP in the corrective action column of the Critical Limits, Monitoring and Corrective Actions form and identify the record that will be maintained.

Principle 6—Establish Recordkeeping Procedures

HACCP Principle No. 6 states:

''Establish effective recordkeeping procedures that document the HACCP system.''

Maintaining proper HACCP records is an essential part of the HACCP system. Good HACCP records—meaning that they are accurate and complete—can be very helpful to you for the following reasons:

- Records serve as written documentation of your establishment's compliance with its HACCP plan.
- Records allow you to trace the history of an ingredient, in-process operations, or a finished product, should problems arise.
- Records help you identify trends in a particular operation that could result in a deviation if not corrected.
- If you were ever faced with a product recall, HACCP records could help you identify and narrow the scope of such a recall.
- Well-maintained records are good evidence in potential legal actions against an establishment.

In accordance with the HACCP principles, your HACCP system should include records for CCPs, establishment of critical limits, handling of deviations, and your HACCP plan. Examples of these and other HACCP forms that may be useful in assembling the HACCP plan are located in the appropriate sections of this guidebook. For your review, these forms are:

Product(s) Description Form
Product and Ingredients Form
Process Flow Diagram Form
Hazard Identification/Preventive Measures Form
CCP Determination Form
Critical Limits, Monitoring and Corrective Actions Form
Recordkeeping and Verification Form (Verification will be explained in the next section of this guidebook)
HACCP Plan Form

In many cases, the records you currently maintain may be sufficient to document your HACCP system. Records must contain at least the following information: title and date of record; product identification; critical criteria or limits; a line for the monitor's signature; a place for the reviewer's signature; and, an orderly manner for entering the required data.

An example of a blank Recordkeeping and Verification Form is found below. Also below is an example of the form filled in for cooked sausage in one establishment.

Steps in Establishing Recordkeeping Procedures

1. Review the records you currently maintain and determine which ones adequately address the monitoring of the CCPs you have identified, or develop forms for this information.

2. Develop any forms necessary to fully record corrective actions taken when deviations occur.

3. Develop forms to document your HACCP system. (This will be explained in the next section, on verification).

4. Identify the monitoring employees responsible for entering data into the records and ensure that they understand their roles and responsibilities.

5. Enter the record form name(s) on the Recordkeeping and Verification Form under the records column adjacent to the appropriate CCP. (Verification will be explained in the next section).

6. Enter the appropriate record form name(s) on the Recordkeeping and Verification Form under the verification procedures column adjacent to the appropriate CCP. (Verification will be explained in the next section).

Principle 7—Establish Verification Procedures

HACCP Principle No. 7 states:

''Establish procedures to verify that the HACCP system is working correctly.''

After a HACCP plan has been put into place, verification activities occur on an ongoing basis. Verification entails the use of methods, procedures, or tests in addition to those used in monitoring, to determine whether the HACCP system is operating as intended.

Simply stated, you need to verify that your HACCP system is working the way you expected it to work. There are several areas that warrant checking. You will probably first want to review your HACCP plan to determine whether the CCPs and critical limits that you established are really the right ones and that you are controlling and monitoring them adequately. You should also make sure that employees are following your procedures for taking corrective actions when a critical limit is exceeded. Finally, you should check to see that your employees are keeping good HACCP records.

By doing these things, you will evaluate the day-to-day operation of your HACCP system. Don't be surprised if you find that you need to fine-tune your HACCP plan.

Some things you can do to verify your HACCP system are:

- Analytically test or audit your monitoring procedures;
- Calibrate your temperature equipment;
- Sample your product, including microbiological sampling;
- Review your monitoring records;
- Review your records of deviations and product dispositions;
- Inspect and audit your establishment's operations;
- Sample for environmental and other concerns.

BILLING CODE 3410–DM–P

RECORDKEEPING AND VERIFICATION

PRODUCT:

PROCESS STEP/CCP	RECORDS	VERIFICATION PROCEDURES

DATE:_____ **APPROVED BY:**_____

RECORDKEEPING AND VERIFICATION

PRODUCT: Cooked sausage

PROCESS STEP/CCP	RECORDS	VERIFICATION PROCEDURES
Receiving Non-meat ingredients	Receiving Record	Review Daily Receiving Record against approved supplies Quarterly collect audit sample for lab analysis
Cook/Smoke CCP	Handwritten smokehouse log and smokehouse temperature recording chart	Review daily smokehouse logs & charts. Calibrate temperature measuring devices weekly & temperature recording charts quarterly Quarterly, collect samples for micro. analysis.
Packaging CCP	Metal Detection Log	Review log daily & corrective action records. Calibrate equipment daily against known standard. Conduct spot checks of equipment weekly.

DATE: April 23, 1996 **APPROVED BY:** J. D. MacIntosh

BILLING CODE 3410–DM–C

You can use the Recordkeeping and Verification Form to record your verification procedures. A sample blank form appears below. An example filled in for cooked sausage in one establishment appears below.

Steps in Establishing Verification Procedures

1. Determine the appropriate verification procedure to ensure that each CCP and critical limit is adequately controlled and monitored.
2. For each CCP, determine procedures to ensure that employees are following your established procedures for handling product deviations and for recordkeeping.
3. Identify the frequencies for conducting any verification checks and the records where the results will be recorded.
4. Enter the appropriate details on the Recordkeeping and Verification Form for future reference.

Validate Your HACCP Plan

It is very important to validate your HACCP plan. The regulation defines validation as ''the scientific and technical process for determining that the CCPs and associated critical limits are adequate and sufficient to control likely hazards.''

Simply put, when you validate your HACCP plan, you demonstrate that what you have written and put into place can actually prevent, eliminate, or reduce the levels of hazards that you have identified.

To validate your HACCP plan, you need to assemble information to show that your HACCP plan will work to control the process and to prevent food safety hazards. There are two types of information that you will probably collect. First, you will likely gather supporting scientific information, such as studies that establish the time and temperatures necessary to kill certain harmful bacteria. Second, you may wish to gather practical information, such as test results from products produced under your HACCP plan. An example of a test might be microbiological analysis of your finished, ready-to-eat products. There are many sources of information to validate your HACCP plan, including: the scientific literature, product testing results, experimental research results, scientifically-based regulatory requirements, official FSIS guidelines, or information developed by process authorities.

You have a great deal of flexibility in assembling the information to validate your plan, in terms of both source and quantity of information. For example, a slaughter plant should validate that its plan ensures residue control, to prevent violative levels of chemicals, animal drugs or pesticides in carcasses. A slaughter plant might choose to purchase animals only from suppliers who provide veterinary certifications that the animals have been raised under a program that assures that all animal drugs, pesticides, and other chemicals are properly used. In this situation, the establishment could validate this critical control point with the following information: a copy of the residue prevention program under which the producer is certified; a report of an on-site visit to the feedlot; and results of analyses of carcasses for compounds of concern.

Validation is simpler for HACCP plans for products such as cooked beef, roast beef, or cooked corned beef. Current regulatory requirements for these products include scientifically-based processing times, temperatures, and handling requirements. Your HACCP plan would need only to reflect these regulatory requirements; additional information would be unnecessary. In this case, you could do a minimal number of product analyses to demonstrate that hazards of concern, such as *Salmonella*, were not found in the products produced under the HACCP plan.

It is important that you reassess your HACCP plan at least once a year and whenever any of the following occurs:

1. Potential new hazards are identified that may be introduced into the process for the product.
2. You add new ingredients.
3. You change the process steps or procedures.
4. You introduce new or different processing equipment.

Finishing Your HACCP Plan

Now you are ready to assemble all your information into one HACCP Plan. A sample HACCP Plan blank form is provided below. An example of a form filled in for one establishment's canned beef stew process is shown below. It is important for your records that you assemble all your information into a final HACCP plan. To make sure that your HACCP Plan is complete, you may want to check it against the checklist provided in the next section of this guidebook.

Now you are ready to put your HACCP Plan into action and make HACCP a reality in your establishment.

BILLING CODE 3410–DM–P

HACCP PLAN

PRODUCT:

PROCESS STEP	BIOLOGICAL - B CHEMICAL - C PHYSICAL - P HAZARD DESCRIPTION	CCP	CRITICAL LIMITS	MONITORING PROCEDURES/FREQUENCY/ PERSON RESPONSIBLE	CORRECTIVE/PREVENTIVE ACTION/PERSON RESPONSIBLE	HACCP RECORDS	VERIFICATION PROCEDURES/PERSON RESPONSIBLE

DATE:_____ **APPROVED BY:**_____

HACCP PLAN

PRODUCT: Canned Beef Stew

PROCESS STEP	BIOLOGICAL - B CHEMICAL - C PHYSICAL - P HAZARD DESCRIPTION	CCP	CRITICAL LIMITS	MONITORING PROCEDURES/FREQUENCY/ PERSON RESPONSIBLE	CORRECTIVE/PREVENTIVE ACTION/PERSON RESPONSIBLE	HACCP RECORDS	VERIFICATION PROCEDURES/PERSON RESPONSIBLE
Formulation	B - Microbial Growth (C. botulinum)	6B	Product formulated using quantities of ingredients specified in the formula	Monitor formulation of product as each component is added. Record all findings in HACCP record log and sign record/ Formulation supervisor	Identify and control affected product, correct procedure; evaluate operation for cause of deficiency take corrective action; document action in HACCP records logs and sign. Formulation supervisor	Record all results and corrective actions in specific record and sign	Audit to verify accuracy of records; Check if Critical Limit is correct and adequate for hazard; assure corrective actions are adequate; document findings. QC Manager
Filling	B- Microbial Growth	7B	Container filled to required fill weight as specified in recommended process schedule	Monitor operational filling procedures. Recorded all findings in HACCP records log and sign. / Filling Machine operator	Identify and control affected product; empty all rejected containers and rework contents; correct or adjust procedure; evaluate operator for cause of deficiency; take corrective	Record all results and corrective actions in HACCP records	Audit to verify calibration of metering devices and accuracy of records; review records to assure accuracy; check to see if Critical Limit is adequate for hazard and comparable to
					action; document actions in HACCP records log and sign/ Filling Machine Operator	log and sign.	plant records; assure corrective actions are adequate; document findings / QC manager

DATE: August 5, 1996 **APPROVED BY:** R. S. Winston-Jones

[Note: This page represents only two steps in this establishment's process for canned beef stew]

HACCP Plan Checklist

You can use the HACCP Plan Checklist provided in this section to ensure that your HACCP plan adequately addresses all seven HACCP principles.

When completing the checklist, if you answer ''NO'' to any question, you reevaluate that section of the HACCP plan and make whatever modifications are necessary. Some modifications may require the assistance of recognized HACCP experts.

Any time you make major changes to the HACCP plan based upon product or process modifications, it would be advisable to review the checklist to ensure that the revisions are acceptable.

You can keep the HACCP Plan Checklist as part of your HACCP plan for future reference and to provide documented evidence that your HACCP plan addresses all seven HACCP principles.

ESTABLISHMENT NO. _____
PRODUCT/PROCESS _____
DATE _____

HACCP PLAN CHECKLIST

A. DESCRIBE THE PRODUCT	YES	NO
1. Does the HACCP plan include:		
a. The producer/establishment and the product name?		
b. The ingredients and raw materials used along with the product receipt or formulation?		
c. The packaging used?		
d. The temperature at which the product is intended to be held, distributed and sold?		
e. The manner in which the product will be prepared for consumption?		
2. Has a flow diagram for the production of the product been developed that is clear, simple, and descriptive of the steps in the process?		
3. Has the flow diagram been verified for accuracy and completeness against the actual operating process?		
B. CONDUCT A HAZARD ANALYSIS	YES	NO
1. Have all steps in the process been identified and listed where hazards of potential significance occur?		
2. Have all hazards associated with each identified step been listed?		
3. Have safety concerns been differentiated from quality concerns?		
4. Have preventive measures to control the identified hazard been identified, if they exist, and listed?		
C. IDENTIFY CRITICAL CONTROL POINTS	YES	NO
1. Has the CCP Decision Tree been used to help determine if a particular step is a CCP for a previously identified hazard?		
2. Have the CCPs been entered on the forms?		
3. Have all significant hazards identified during the hazard analysis been addressed?		
D. ESTABLISH CRITICAL LIMITS	YES	NO
1. Have critical limits been established for each preventive measure at each CCP?		
2. Has the validity of the critical limits to control the identified hazard been established?		
3. Were critical limits obtained from the regulations, processing authority, etc?		
4. Is documentation attesting to the adequacy of the critical limits maintained on file at the establishment?		
E. ESTABLISH MONITORING PROCEDURES	YES	NO
1. Have monitoring procedures been developed to assure that preventive measures necessary for control at each CCP are maintained within the established critical limits?		
2. Are the monitoring procedures continuous or, where continuous monitoring is not possible, is the frequency of monitoring sufficiently reliable to indicate that the hazard is under control?		
3. Have procedures been developed for systematically recording the monitoring data?		
4. Have employees responsible for monitoring been identified and trained?		
5. Have employees responsible for reviewing monitoring records been identified and trained?		
6. Have signatures of responsible individuals been required on the monitoring records?		
7. Have procedures been developed for using the results of monitoring to adjust the process and maintain control?		
F. ESTABLISH CORRECTIVE ACTIONS	YES	NO
1. Have specific corrective actions been developed for each CCP?		
2. Do the corrective actions address:		
a. Reestablishment of process control?		
b. Disposition of affected product?		
c. Procedures to correct the cause of non-compliance and to prevent the deviation from recurring?		
3. Have procedures been established to record the corrective actions?		
4. Have procedures been established for reviewing the corrective action records?		
G. ESTABLISH RECORDKEEPING PROCEDURES	YES	NO
1. Have procedures been established to maintain the HACCP plan on file at the establishment?		
2. Do the HACCP records include:		
Description of the product and its intended use?		
Flow diagram for the process, indicating CCPs?		
Preventive measures?		
Critical limits?		
Monitoring system:		
Corrective action plans for deviations from critical limits?		
Recordkeeping procedures for monitoring?		
Procedures for verification of the HACCP system?		
H. ESTABLISH VERIFICATION PROCEDURES	YES	NO
1. Have procedures been included to verify that all significant hazards were identified in the HACCP plan when it was developed?		
2. Have procedures been included to verify that the critical limits are adequate to control the identified hazards?		
3. Are procedures in place to verify that the HACCP system is functioning properly?		

HACCP PLAN CHECKLIST—Continued

4. Are procedures in place to reassess the HACCP plan and system on a regular basis or whenever significant product, process or packaging changes occur?		

References

Agriculture Canada. *Food Safety Enhancement Program—Implementation Manual.* Camelot Drive, Nepean, Ontario, Canada. American Meat Institute Foundation. *HACCP: The Hazard Analysis and Critical Control Point System in the Meat and Poultry Industry.* 1994. Washington, D.C.

Bean, N. H. and Griffin, P. M. 1990. ''Foodborne disease outbreaks in the United States, 1973–1987: Pathogens, vehicles, and trends.'' J. Food Protect. 53: 804–817.

Bean, N. H. and Griffin, P. M. 1990. ''Foodborne disease outbreaks, 5-year summary, 1983–1987.'' J. Food Protect. 53: 711.

Corlett, D.A., Jr. and R.F. Steir. 1991. ''Risk assessment within the HACCP system.'' Food Control 2:71–72.

Council for Agricultural Science and Technology. *Risks Associated with Foodborne Pathogens.* February 1993.

Environmental Protection Agency. 1992. *Tolerances for Pesticides in Foods.* Title 40, Code of Federal Regulations, Part 185. U.S. Government Printing Office, Washington, DC.

FDA. 1989. *The Food Defect Action Levels.* FDA/CFSAN. Washington, DC.

FDA. 1994. *Fish and Fishery Products Hazards and Control Guide—Get Hooked on Seafood Safety.* Office of Seafood. Washington, DC.

International Commission on Microbiological Specification for Foods. 1989. *Microorganisms in Foods 4. Application of hazard analysis and critical control point (HACCP) system to ensure microbiological safety and quality.* Blackwell Scientific Publications, Boston.

National Advisory Committee on Microbiological Criteria for Foods (NACMCF). March 20, 1992—Hazard Analysis and Critical Control Point System. Int. J. Food Micr. 16: 1–23.

National Advisory Committee on Microbiological Criteria for Foods (NACMCF). June 1993—Report on Generic HACCP for Raw Beef. Food Micr. 10: 449–488.

Oblinger, J. L., ed. 1988. ''Bacteria Associated with Foodborne Illnesses, A Scientific Status Summary by the Institute of Food Technologists Expert Panel on Food Safety and Nutrition.'' Food Technol. 42(4).

Padhye, N. V.; Doyle, M. P. 1992. ''E. Coli 0157:H7 Epidemiology, pathogenesis, and methods for detection in food.'' J. Food Prot. 55:55–565.

Pierson, M. D. and Corlett, D. A., Jr. ed. 1992. *HACCP/ Principles and Applications. Van Nostrand Reinhold.*

Schuchat, A., Swaminathan, B. And Broome, C.V. 1991. ''Epidemiology of human listeriosis.'' Clin. Microbiol. Rev. 4: 169–183.

Stevenson, K. E. ed. 1993. *HACCP-Establishing Hazard analysis Critical Control Point Programs.* A Workshop Manual. The Food Processors Institute. Washington, D.C.

Tauxe, R.V., Hargett-Bean, N., Patton, C.M. and Wachsmuth. I.K. 1988. ''Campylobacter isolates in the United States, 1982–1986.'' In, CDC Surveillance Summaries, June 1988. MMWR 37 (No. SS- 2) : 1–13.

Tauxe, R. V., *Epidemiology of Camplyobacter jejuni infections in the United States and other Industrialized Nations.* In Nachamkin, Blaser, Tompkins, ed. Camplyobacter jejuni: Current Status and Future Trends, 1994, chapter 2, pages 9–19.

Todd, E. 1990. ''Epidemiology of Foodborne Illness: North America.'' The Lancet 336:788.

Tompkin, R. B. 1990. ''The Use of HACCP in the Production of Meat and Poultry Products. J. of Food Protect.'' 53(9): 795–803.

Tompkin, R. B. 1995. *The Use of HACCP for Producing and Distributing Processed Meat and Poultry Products.* In Advances in Meat Research. Volume 10. Hazard Analysis Critical Control Point (HACCP) in Meat, Poultry and Seafoods. Chapman & Hall (In Press).

USDA, 1994. *List of Propriety Substances and Nonfood Compounds Authorized for Use under USDA Inspection and Grading Programs.* USDA, FSIS, Washington, DC.

Internet Home Pages

Agriculture Canada
http://aceis.agr.ca

Center for Disease Control
http://fftp.cdc.gov/pub/mmwr/MMWRweekly

Food Law Sites
http://www.fsci.umn.edu/FoodLaw/foodlaw.html

HACCP95
http://www.cvm.uiuc.edu/announcements/haccp95/haccp95.html

International Meat and Poultry HACCP Alliance
http://ifse.tamv.edu./haccpall.html

Material Safety Data Sheets
http://listeria.nwfsc.noaa.gov/msds.html

U.S. Department of Agriculture
http://www.usda.gov

U.S. Food and Drug Administration/Bad Bug Book
http://vm.cfsan.fda.gov/list.html

Appendix D—Hazards and Preventive Measures Guide

Preface

This Guide is designed to help a plant's HACCP team conduct a hazard analysis (HACCP Principle 1) by providing both general and detailed information on hazards associated with meat and poultry products and by listing some of the controls that can be used to prevent or manage those hazards. When using this Guide it is very important to remember that it is not all-inclusive: There may be other hazards associated with ingredients or processes; there may be other control measures. The examples assembled here are to help plant HACCP teams think through all the hazards that could affect their product and know about various controls that can be used.

Section I describes some of the biological (including microbiological), chemical, and physical hazards generally recognized and associated with meat and poultry products. This section can serve as a resource when the HACCP team begins the hazard analysis. It is probably useful to read through this general information early in the process of developing the HACCP plan. This will help the team form an idea of what is meant by a given hazard.

Section II provides information on generally recognized preventive measures used in the meat and poultry industry to control biological, chemical, and physical hazards. This section also has examples of regulatory critical limits associated with some preventive measures.

Sections III, IV, and V list processing steps, hazards, and controls for beef, poultry, and swine slaughter. This section should be used with the process flow diagram developed by the HACCP team.

Section VI presents hazards and controls organized according to ingredients, including both meat and poultry ingredients and other ingredients used in meat and poultry production. This section should be used with the list of ingredients developed by the HACCP team.

Section VII contains a set of tables identifying potential hazards at various processing steps used to produce meat and poultry products. This section should be used with the process flow diagram developed by the plant's HACCP team.

Section VIII contains a list of valuable references that will help the plant's HACCP team further develop the HACCP plan.

Section I

Overview of Biological, Chemical, and Physical Hazards

In a HACCP system, a hazard is defined as a biological, chemical, or physical property that may cause a food

to be unsafe for human consumption. This guide is a reference for plant HACCP teams to use in their hazard identification and analysis. It is not intended to be totally inclusive; the team may have other information or may rely on additional references.

Biological Hazards

Biological hazards, which are mainly bacterial, can cause either foodborne infections or intoxications. A foodborne infection is caused by a person ingesting a number of pathogenic microorganisms sufficient to cause infection as a result of their multiplication, e.g., salmonellosis. A foodborne intoxication is caused by the ingestion of already formed toxins produced by some bacteria when they multiply in food, e.g., staphylococcal enterotoxin.

When assessing bacterial hazards to human health in meat and poultry products, nine pathogenic bacteria must be considered. The following identifies and discusses the nine pathogenic microorganisms of concern.

Bacillus cereus

B. cereus foodborne intoxication includes two recognized types of illness—diarrheal and emetic (vomiting).

Foods associated with illness include: Boiled and fried rice, custards, cecal products meats, vegetables, and fish; food mixtures such as sauces, puddings, soups, casseroles, pastries, and salads.

Campylobacter jejuni

Campylobacteriosis is the illness caused by *C. jejuni*. It is also often known as campylobacter enteritis or gastroenteritis.

Food associated with illness include: raw and undercooked chicken, raw milk, non-chlorinated water.

Clostridium botulinum

Foodborne botulism (as distinct from wound botulism and infant botulism) is a severe foodborne disease caused by the ingestion of foods containing the potent neurotoxin formed during growth of the organism. Botulism has a high mortality rate if not treated immediately and properly.

Foods associated with disease include: sausages, meat products, and seafood products, improperly canned foods, vegetable products.

Clostridium perfringens

Perfringens foodborne illness is the term used to describe the common foodborne disease caused by the release of enterotoxin during sporulation of *C. perfringens* in the gut.

Foods associated with illness include: meat and poultry products and gravy.

Escherichia coli O157:H7

Hemorrhagic colitis is the name of the acute disease caused by *E. coli* O157:H7.

Foods associated with illness: undercooked or raw hamburger (ground beef) has been implicated in many documented outbreaks and in other sporadic cases; other meat products, raw milk, untreated water.

Listeria monocytogenes

Listeriosis is the name of the general group of disorders caused by *L. monocytogenes*.

Foods associated with illness: cole slaw, cooked poultry, cooked meat, and raw milk, supposedly pasteurized fluid milk, cheeses (particularly soft-ripened varieties). Its ability to grow at temperatures as low as 3 °C permits multiplication in refrigerated foods.

Salmonella spp

S. typhi and the paratyphoid bacteria are normally septicemic and produce typhoid or typhoid-like fever in humans and are pathogenic only for humans. Other forms of salmonellosis generally produce milder symptoms. The organism is found in the intestinal tracts of warm blooded animals.

Foods associated with illness: raw and cooked meats, poultry, eggs (and exterior of egg shells), untreated water, raw milk and dairy products, fish, shrimp, frog legs, yeast, sauces and salad dressing, etc.

Staphylococcus aureus

Staphylococcal food poisoning (staphylococcal enterotoxicosis; staphylococcal enterotoxemia) is the name of the condition caused by the enterotoxins that some strains of *S. aureus* produce.

Foods associated with illness: meat and meat products; poultry and egg products; egg, tuna, ham, chicken, potato, and macaroni salads; sandwich fillings; milk and dairy products; etc.

Yersinia enterocolitica

Yersiniosis is the name of the disease caused by pathogenic species in the genus *Yersinia*. The disease is a gastroenteritis with diarrhea and/or vomiting, and fever and abdominal pain.

Foods associated with illness: meats, oysters, fish, milk, and chitterlings.

TABLE 1.—CHARACTERISTICS OF GROWTH FOR NINE PATHOGENS ASSOCIATED WITH MEAT AND POULTRY PRODUCTS

Pathogens	Temperature of growth	pH	Minimum A_w
Bacillus cereus	10–48 °C	4.9–9.3	0.95
Campylobacter jejuni	30–47 °C	6.5–7.5	.....
Clostridium botulinum	3.3–46 °C	>4.6	0.94
(Types A,B,E)	.....	.....	.....
Clostridium perfringens	15–50 °C	5.5–8.0	0.95
Escherichia coli O157:H7	10–42 °C	4.5–9.0	.....
Listeria monocytogenes	2.5–44 °C	5.2–9.6	.....
Salmonella	5–46 °C	.....	4–9 0.94
Staphylococcus aureus	6.5–46 °C	5.2–9	0.86
Yersinis enterocolitica	2–45 °C	4.6–9.6	.....

Zoonotic agents are biological hazards that cause disease in animals and can be transmitted and cause disease in humans. The following lists some zoonotic hazards:

Trichinella spiralis is a nematode parasite whose larval from encysts primarily in the striated muscle of pigs, horses, rats, bears and other mammals. Infection in humans results in ''flu-like symptoms'' (diarrhea, fever, stiffness, muscle pain, respiratory distress, etc.) And heavy infection may lead to death.

Foods associated with illness include: raw and undercooked pork, bear and equine meat.

Taenia saginata is a human tapeworm whose larval form (*Cysticercus bovis*) encysts in the tissues of cattle.

Foods associated with illness include: raw or undercooked beef.

Taenia solium is a human tapeworm whose larval form (*Cystricercus cellulosae*) encysts in the tissues of pigs,

dogs, and humans. Cysts in humans are most common in the subcutaneous tissues, eye and the brain.

Foods associated with illness include: raw or undercooked pork.

Toxoplasma gondii is a protozoan parasite that encysts in the tissues of a variety of mammalian hosts including pigs. Human infection may result in ''flu like'' symptoms in adults, late term abortions in pregnant women or serious congenial infections in children.

Foods associated with illness include: raw or undercooked pork.

Balantidium coli is a protozoal organism.

Foods associated with illness include: raw, undercooked pork (fecal contamination)

Cryptosporidium spp.

Foods associated with illness include: inadequately treated water, raw or undercooked veal or beef.

Chemical Hazards

While biological hazards are of great concern because contaminated foods can cause widespread illness outbreaks, chemical hazards may also cause foodborne illnesses, although generally affecting fewer people.

Chemical hazards can originate from four general sources:

(1) Agriculture chemicals: pesticides, herbicides, animal drugs, fertilizers, etc.

(2) Plant chemicals: cleaners, sanitizers, oils, lubricants, paints, pesticides, etc.

(3) Naturally-occurring toxicants: products of plant, animal, or microbial metabolisms such as aflatoxins, etc.

(4) Food chemicals: preservatives, acids, food additives, sulfiting agents, processing aids, etc.

(5) Environmental contaminants: lead, cadmium, mercury, arsenic, PCBs.

For many years the Food Safety and Inspection Service has conducted a National Residue Program to monitor the occurrence of residues from hazardous chemicals in meat and poultry products. Under a HACCP regime, frontline responsibility for control of residues from animal drugs or environmental contaminants will move from the government to the industry, although the agency will continue to verify that these controls and preventive measures are effective. Companies that slaughter livestock and poultry will probably find the FSIS National Residue Program Plan to be a useful document. The plan contains lists of compounds that might leave residues in the tissues of animals or birds, and provides some information on their relative risk through the rankings in the Compound Evaluation System. It provides information on which compounds FSIS has included in its annual testing program. It also provides information on the methods that are used to test for the compounds. Another FSIS document, the Domestic Residue Data Book, presents the results of FSIS testing. These data can help a HACCP team understand the overall hazard presented by various residues, although each company should gather information about the residue control performance of its own suppliers.

Another useful reference about hazardous chemicals is the FSIS List of Proprietary Substances and Nonfood Compounds. This publication lists substances used in the preparation of product and nonfood compounds used in the plant environment that have been authorized by FSIS.

Table 2 identifies some additional sources of chemical hazards. References listed in Section VIII can be used by the HACCP team in evaluating the potential chemical hazards associated with their product or process.

TABLE 2.—TYPES OF CHEMICAL HAZARDS

Location	Hazard
Raw Materials	Pesticides, antibiotics, hormones, toxins, fertilizers, fungicides, heavy metals, PCBs. Color additives, inks, indirect additives, packaging materials.
Processing	Direct food additives—preservatives (nitrite), flavor enhancers, color additives. Indirect food additives—boiler water additives, peeling aids, defoaming agents.
Building and Equipment Maintenance	Lubricants, paints, coatings.
Sanitation	Pesticides, cleaners, sanitizers.
Storage and Shipping	All types of chemicals, cross contamination.

Physical Hazards

Physical hazards include a variety of materials referred to as extraneous materials or foreign particles or objects. A physical hazard can be defined as any physical material not normally found in a food that can cause illness or injury to a person consuming the product.

Physical hazards in finished products can arise from several sources, such as contaminated raw materials, poorly designed or maintained facilities and equipment, faulty procedures during processing, and improper employee training and practices. Table 3 identifies some common physical hazards and their causes or sources.

TABLE 3.—TYPES OF PHYSICAL HAZARDS

Hazard	Source or cause
Glass	Bottles, jars, light fixtures, utensils, gauge covers, thermometers.
Metal	Nuts, bolts, screws, steel wool, wire, meat hooks.
Stones	Raw materials.
Plastics	Packaging materials, raw materials.
Bone	Raw material, improper plant processing.
Bullet/BB Shot/Needles	Animals shot in field, hypodermic needles used for infections.
Jewelry	Pens/pencils, buttons, careless employee practices.

Section II

Controls and Critical Limits for Biological, Chemical, and Physical Hazards

When all significant biological, chemical, and physical hazards are identified along with their points of occurrence, the next task is to identify measures to prevent the hazards from compromising the safety of the finished product.

Preventive measures or controls can be defined as physical, chemical, or other factors that can be used to remove or limit an identified hazard. When considering preventive measures or controls, a limit must be established—this is the criterion that must be met to ensure safety. For example, proper heat treatment will control some pathogenic bacteria, and it is thus crucial to know what time/temperature combinations constitute proper heat treatment for various products; these time/temperature combinations are the critical limits. Another example of a preventive measure for a biological hazard is the chlorination of poultry chiller water to prevent cross contamination of carcasses with *Salmonella*.

With identified physical hazards, the most common preventive measures may be visual examinations of product or the use of a metal detector. Chemical hazards associated with raw materials may be controlled through detailed product specifications, letters of guarantee, or purchase specifications.

Tables 4, 5, and 6 identify preventive measures that may be considered by the HACCP team. Table 7 gives some examples of regulatory limits.

TABLE 4.—EXAMPLES OF PREVENTIVE MEASURES FOR BIOLOGICAL HAZARDS

Pathogen	Preventive measure or control
Bacillus cereus	Proper holding and cooling temperatures of foods; thermal processing of shelf-stable canned food.
Campylobacter jejuni	Proper pasteurization or cooking; avoiding cross-contamination of utensils, equipment; freezing; atmospheric packaging.
Clostridium botulinum	Thermal processing of shelf-stable canned food; addition of nitrite and salt to cured processed meats; refrigeration of perishable vacuum packaged meats; acidification below pH 4.6; reduction of moisture below water activity of 0.93.
Clostridium perfringens	Proper holding and cooling temperatures of foods; proper cooking times and temperatures; adequate cooking and avoidance of cross-contamination by unsanitary equipment or infected food handlers.
Listeria monocytogenes	Proper heat treatments; rigid environmental sanitation program; separation of raw and ready-to-eat production areas and product.
Salmonella spp	Proper heat treatment; separation of raw and cooked product; proper employee hygiene; fermentation controls; decreased water activity; withdrawing feed from animals before slaughter; avoiding exterior of hide from contacting carcass during skinning; antimicrobial rinses; scalding procedures; disinfecting knives.
Staphylococcus aureus	Employee hygiene; proper fermentation and pH control; proper heat treatment and post-process product handling practices; reduced water activity.
Yersinia enterocolitica	Proper refrigeration; heat treatments; control of salt and acidity; prevention of cross-contamination.

TABLE 5.—EXAMPLES OF PREVENTIVE MEASURES FOR CHEMICAL HAZARDS

Hazard	Preventive measure
Naturally-Occurring Substances	Supplier warranty or guarantee; verification program to test each supplier's compliance with the warranty or guarantee.
Added Hazardous Chemicals	Detailed specifications for each raw material and ingredient; warranty or letter of guarantee from the supplier; visiting suppliers; requirement that supplier operates with a HACCP plan; testing program to verify that carcasses do not have residues.
In-Process Chemicals	Identify and list all direct and indirect food additives and color additives; check that each chemical is approved; check that each chemical is properly used; record the use of any restricted ingredients.

TABLE 6.—EXAMPLES OF PREVENTIVE MEASURES FOR PHYSICAL HAZARDS

Hazard	Preventive measure
Foreign objects in raw materials	Supplier's HACCP plan; use of specifications, letters of guarantee; vendor inspections and certification; in-line magnets; screens, traps, and filters; in-house inspections of raw materials.
Foreign objects in packaging materials, cleaning compounds, etc	Supplier's HACCP plan; use of specifications, letters of guarantee; vendor inspections and certification; in-house inspections of materials.
Foreign objects introduced by processing operations or employee practices.	In-line metal detectors; visual product examinations; proper maintenance of equipment; frequent equipment inspections.

TABLE 7.—SOME EXAMPLES OF REGULATORY LIMITS

Hazard	Regulatory limit	Regulatory citation
biological: Microbial growth due to temperature abuse-Poultry Chilling.	All poultry must be chilled immediately after processing to a temperature of 40 °F or less.	§ 381.66
chemical: Excess chemicals contact product	Chemicals used are approved for the intended use and at appropriate amounts.	§ 318.7
chemical: Chemical hazard from packaging materials	Edible products must be packaged in container that will not adulterate product or be injurious to health. Packaging materials must be covered by a letter of guaranty.	§ 317.24
biological: Trichinae in pork	Products containing pork muscle tissue must be effectively heated, refrigerated, or cured to destroy any possible live trichinae.	§ 318.10
biological: Pathogens in ready to eat products	For destruction of pathogens that may survive a dry heat process. One of the time/temperature combinations for *cooked* beef, *roast* beef, and *cooked* corned beef; e.g., 143 °F\61.7 °C minimum temperature at minimum time of 6 minutes.	§ 318.17
physical: Extraneous material found on post chill examination of poultry carcasses.	Sampled carcasses observed for conformance with post chill criteria, including unidentified foreign material.	§ 381.76

Section III

Table 8.—Red Meat (Beef) Slaughter Hazards and Controls Use of Information

This section contains examples of common process steps in beef slaughter. With each processing step, shown in the first column, you will find an ''X'' in the next three columns to tell you if there is a Biological hazard in column 2, a Chemical hazard in column 3, or a Physical hazard in column 4. Column 5 describes the hazard(s), and the last column lists some relevant controls or preventive measures. This table should be used in conjunction with the process flow diagram developed by your HACCP team for your plant's beef slaughter process.

TABLE 8.—RED MEAT SLAUGHTER: BEEF

Red meat slaughter-beef: examples of processing steps	B	C	P	Description of biological, chemical, or physical hazards for the process steps	Controls or preventive measures
Receiving & Holding		X		—Residues present in edible tissues above tolerances.	—Residue certification presented for live animal(s).
Skinning	X			—Micro contamination of carcass surface due to contaminated outside hide surface—contamination of carcass from floor—cross-contamination.	—Skinning procedures are accomplished without hair or visible fecal contamination of the carcass.—Careful employee practices.—Udder and puzzle removal are accomplished without contamination of edible product.
Evisceration	X			—cross-contamination from broken viscera.	—Esophagus is tied to prevent escape of stomach contents—Bung is dropped with sanitized knife and bagged to prevent escape of feces—Viscera are removed intact.
Final Wash	X			—growth of pathogens through insufficient wash.	—Final wash: Temperature: 90–100°F Pressure: 345–2070 kpa (50–300 psi)—Steam Pasteurization: Temperature: 195°F or greater at surface Dwell time: 5–15 seconds in cabinet.
Chilling	X			—growth of pathogens	—Surface temperature ≤40°F as soon as possible—Carcasses spaced a minimum of 1 inch apart.
Receiving-Packaging Materials and Non Beef Supplies.		X		—contamination from deletious chemicals present in the packaging materials.	Letters of guarantee on file for all packaging materials/non-poultry supplies used by the establishment.
Storage-Non Beef Supplies			X	—contamination of stored packing materials/supplies from foreign material.	Examine to ensure no visible foreign material on/in non-poultry supplies or packaging materials.

Section IV

Table 9.—Poultry Slaughter Hazards and Controls

Use of Information

This section contains examples of common process steps in poultry slaughter. With each processing step, shown in the first column, you will find an ''X'' in the next three columns to tell you if there is a Biological hazard in column 2, a Chemical hazard in column 3, or a Physical hazard in column 4. Column 5 describes the hazard(s), and the last column lists some relevant controls or preventive measures. This table should be used in conjunction with the process flow diagram developed by your HACCP team for your plant's poultry slaughter process.

TABLE 9.—POULTRY SLAUGHTER

Poultry slaughter: examples of processing steps	B	C	P	Description of biological, chemical, or physical hazards for the process steps	Controls or preventive measures
Scalding	X			—contamination from scalding medium	—Fresh water input to achieve a minimum of 1 quart per bird —Temperature of the scald water maintained at appropriate levels (e.g., ≥126°F) —Maintain counterflow scalding unit function —Post scald wash has sufficient pressure and volume to cover carcass with fresh (potable) water spray —Overflow volumes are at required amounts
Offline Procedures	X			—cross contamination from intestinal contents/exudate.	Follow approved offline plant procedures for handling airsacculitis salvage and reprocessing for contamination (e.g., an airsac salvage program that transfers the carcasses to another station where the thigh, drumstick, wing tip, and first wing section are salvaged and washed with chlorinated water).
Final Wash	X			—growth of pathogens	—A final water wash with appropriate levels of chlorinated water (e.g. 20–50 ppm residual chlorine in the water). —Sufficient water volume and pressure for equipment operation and sufficient dwell time in the final washer to remove visible contamination on internal and external surfaces of the carcass.
Chilling-Carcass	X			—growth of pathogens	Deep breast muscle temperature of carcass is ≤ 40°F within the specified time from slaughter for the class of poultry. —Maintain an adequate chlorine level in the overflow water of in-line immersion chillers (e.g., 20–50 ppm residual chlorine in the incoming water). —Maintain proper water flow rates (input/overflow) for continuous chillers per USDA requirements (not less than ½ gallon of fresh water per frying chicken with continuous overflow).
			X	—contamination from foreign material	Product entering (prechill) and exiting (postchill) the chiller system meets the criteria for defects per USDA requirements (e.g. the limits are not exceed for the number and size of extraneous materials found during the postchill examination-9 CFR § 381.76).
Chilling-Giblet/Neck	X			—growth of pathogens	—Temperature and fresh water input sufficient to meet USDA requirements for giblets and necks. —Chlorination of giblet chiller water at appropriate levels for giblets and necks [e.g., giblets must be chilled to 40°F within 2 hours from removal from other viscera/fresh water intake not less than 1 gallon per 40 frying chickens processed-9 CFR § 381.66 (c)(5)].
			X	—contamination from foreign material	—Visually free of hazardous foreign material. —Defects on poultry giblet and necks meet USDA requirements (e.g., each carcass must be observed for conformance against pre and post chill criteria, including unidentified foreign materials-MPI Regulations 381.76).

TABLE 9.—POULTRY SLAUGHTER—Continued

Poultry slaughter: examples of processing steps	B	C	P	Description of biological, chemical, or physical hazards for the process steps	Controls or preventive measures
Cut-Up/Boning/Packaging/ Labeling	X			—growth of pathogens	Temperature of product does not exceed 55°F during further or second processing. —Movement of product through these areas and into the cooler is timely and efficient. —A mid-shift cleanup of the area(s) is performed if the room temperature is not maintained at or below 50°F. —Packaging/labeling materials that come into direct contact with product are intact.
Receiving-Packaging Materials and Non Poultry Supplies.		X		—contamination from deleterious chemicals present in the packaging materials.	Letters of guarantee are on file for all packaging materials/non-poultry supplies used by the establishment.
Storage-Non Poultry Supplies			X	—contamination of stored packing materials/supplies from foreign material.	Examine to ensure no visible foreign material on/in non- poultry supplies or packaging materials.

Section V

Table 10.—Red Meat (Swine) Slaughter Hazards and Controls

Use of Information

This section contains examples of common process steps in swine slaughter. With each processing step, shown in the first column, you will find an ''X'' in the next three columns to tell you if there is a Biological hazard in column 2, a Chemical hazard in column 3, or a Physical hazard in column 4. Column 5 describes the hazard(s), and the last column lists some relevant controls or preventive measures. This table should be used in conjunction with the process flow diagram developed by your HACCP team for your plant's swine slaughter process.

TABLE 10.—RED MEAT SLAUGHTER: SWINE

Red meat slaughter-swine: Examples of processing steps	B	C	P	Description of biological, chemical, or physical hazards for the process steps	Controls or preventive measures
Scalding	X		X	—contamination from scalding medium	Plant time/temperature limits for scalding (e.g., although it may vary with facilities, a temperature of 138 to 140°F is usually satisfactory). —Carcasses should remain in scalding tanks long enough to loosen hair (excessive time or temperature results in carcass cooking).
		X	....	—contamination with chemicals.	—USDA-FDA approved chemical concentration not to exceed manufacturer's recommendations.
Dehairing	X	....	....	—contamination and growth of microorganisms due to breaking of the skin from overexposure to the dehairer.	—Time/temperature determined by plant-specific testing results to remove visible hair to an acceptable level without breaking skin.
Evisceration	X	....	....	—cross contamination from equipment/utensils. —contamination from stomach, intestines, and/or bladder contents. —contamination from employee handling	—Remove all viscera intact. —Contaminated equipment will be clean and sanitized before being used again. —Training program for all employees, to include personal hygiene, product handling procedures, and sanitary dressing procedures.
Trimming	X	....	....	Stick wound has not been removed.	Remove all visible stick-wound related defects.
Chilling	X	....	....	—growth of pathogens	—Cool surface temperature to 40° as soon as possible.
Receiving-Packaging Materials and Non Swine Supplies.	....	X	....	—contamination from deleterious chemicals present in the packaging materials.	Letters of guarantee are on file for all packaging materials/non-poultry supplies used by the establishment.
Storage-Non Swine Supplies	....		X	—contamination of stored packing materials/supplies from foreign material.	Examine to ensure no visible foreign material on/in non-poultry supplies or packaging materials.

Section VI

Table 11.—Ingredient Hazards and Ingredient-Related Hazards

Use of Information

This section contains an alphabetical list of ingredients commonly used in making meat and poultry products. For each entry you will find the name of the ingredient in the first column, and an ''X'' in the next three columns to tell you if there is a Biological hazard in column 2, Chemical hazard in column 3, or Physical hazard in column 4. Column 5 describes the hazard(s), and the last column lists some relevant controls or preventive measures. This table should be used in conjunction with the list of ingredients developed by your HACCP team for the products produced by the process under consideration.

The HACCP team may find that a particular ingredient does not present the hazard identified in these tables. The presence or absence of a hazard can be influenced by the ingredient source and company. Also, *Ingredient Specifications,* provided by the supplier to the establishment, may give details on the material/ingredient being sold, including statements that the materials/ingredients are food grade and are free of harmful components. For example, the ingredient specifications for dried legumes might state that there will be fewer than 5 small rocks or stones per 10 pound bag and that no harmful pesticides were used in the growing process.

TABLE 11.—INGREDIENT HAZARDS

Examples of ingredient	B	C	P	Description of biological, chemical, or physical hazard for the ingredient	Controls or preventive measures
Acidifiers	....	X	....	—toxicological effects if limits are exceeded.	—Ingredients purchased under a Letter of Guarantee. —Ingredients purchased based on producer/provider ingredient specifications.
Anticoagulants	....	X	....	—toxicological effect if limits are exceeded.	—Ingredients purchased under a Letter of Guarantee. —Ingredients purchased based on producer/provider ingredient specifications.
Antifoaming agents	....	X	....	—toxicological effect if limits are exceeded.	—Ingredients purchased under a Letter of Guarantee. —Ingredients purchased based on producer/ provider ingredient specifications.
Antioxidants	....	X	....	—toxicological effect if limits are exceeded.	—Ingredients purchased under a Letter of Guarantee. —Ingredients purchased based on producer/provider ingredient specifications.
Batter/Breading	X	....	X	—growth of pathogens due to improper storage and handling. —foreign material	—Temperature controls for use —Ingredient specification sheet identifying the required parameters the ingredient must meet. —Where applicable, ingredients must be pathogen-free.
Beef (fresh, frozen)	X	....	....	—growth of pathogens due to improper storage and handling.	—Product temperature must be 40 degrees F or less at receiving. —Product must meet establishment purchase specifications. —Product must be produced under a HACCP plan.
Binders/Extenders	....	X	X	—foreign material	—Ingredients purchased under a Letter of Guarantee. —Ingredients purchased based on producer/ provider ingredient specifications.
Bleaching agents	....	X	....	—toxicological effect if limits exceeded	—Ingredients purchased under a Letter of Guarantee. —Ingredients purchased based on producer/ provider ingredient specifications.
Blood	X	....	....	—growth of pathogens from improper handling and storage.	—Ingredient specification sheet identifying the required parameters the ingredient must meet. —Where applicable, ingredients must be pathogen-free. —Meet appropriate temp.
Boneless beef	X	....	X	—growth of pathogens due to improper handling and storage. —foreign particle contamination, e.g., metal fragments or bone.	—Product temperature must be 40 degrees F or less at receiving. —Product must meet establishment purchase specifications. —Product must be produced under a HACCP plan. —Visual examination of product for foreign materials.

TABLE 11.—INGREDIENT HAZARDS—Continued

Examples of ingredient	B	C	P	Description of biological, chemical, or physical hazard for the ingredient	Controls or preventive measures
Cooked beef	X	....	X	—growth of pathogens due to improper handling and storage. —foreign particle contamination, e.g., metal fragments or bone particles in boneless beef.	—Receiving temperature of product must be frozen or refrigerated at 40 degrees F or below. —Product must be received from an approved supplier who produces the product under a HACCP plan. —Visual examination of product for foreign materials upon receipt.
Cooked poultry	X	....	X	—growth of pathogens due to improper handling and storage. —foreign particle contamination, e.g., bone particles in boneless poultry.	—Receiving temperature of product must be frozen or refrigerated at 40 degrees F or below. —Product must be received from an approved supplier who produces the product under a HACCP plan. —Product must be organoleptically acceptable at receipt.
Cooked pork	X	....	X	—growth of pathogens due to improper handling and storage. —foreign particle contamination, e.g., bone particles in boneless pork.	—Receiving temperature of product must be frozen or refrigerated at 40 degrees F or below. —Product must be received from an approved supplier who produces the product under a HACCP plan. —Product must be organoleptically acceptable at receipt.
Coloring agents (natural)	....	X	....	—Toxicological effect if limits exceeded	—Ingredients purchased under a Letter of Guarantee. —Ingredients purchased based on producer/provider ingredient specifications.
Coloring agents (artificial)	....	X	....	—Toxicological effect if limits exceeded	—Ingredients purchased under a Letter of Guarantee. —Ingredients purchased based on producer/provider ingredient specifications.
Curing agents	....	X	....	—Toxico logical effect if limits exceeded	—Ingredients purchased under a Letter of Guarantee. —Ingredients purchased based on producer/provider ingredient specifications.
Curing accelerators	....	X	....	—-toxicological effect if limits are exceeded.	—Ingredients purchased under a Letter of Guarantee. —Ingredients purchased based on producer/provider ingredient specifications.
Dairy products	X	....	X	—growth of pathogens due to improper handling and storage. —foreign material	—Temperature control. —Ingredient specification sheet identifying the required parameters the ingredient must meet. —Where applicable, ingredients must be pathogen-free.
Eggs or egg products	X	....	X	—growth of pathogens due to improper handling and storage. —foreign particle contamination, e.g., shell particles in broken eggs.	—Temperature control. —Ingredient specification sheet identifying the required parameters the ingredient must meet. —Where applicable, ingredients must be pathogen-free.
Emulsifying agents	....	X	....	—toxicological effects if limits exceeded	—Ingredients purchased under a Letter of Guarantee. —Ingredients purchased based on producer/provider ingredient specifications.
Flavoring agents	....	X	....	—toxicological effects if limits exceeded	—Ingredients purchased under a Letter of Guarantee. —Ingredients purchased based on producer/provider ingredient specifications.
Fruits	....	X	X	—contamination from agricultural chemicals. —foreign material	—Ingredient specification sheet identifying the required parameters the ingredient must meet.
Honey	X	....	X	—contamination from inherent microorganisms. —foreign particle contamination, e.g., dirt, insect parts.	—Ingredient specification sheet identifying the required parameters the ingredient must meet.
Legumes (dry)	....	....	X	—foreign particle contamination, e.g., rocks.	—Ingredient specification sheet identifying the required parameters the ingredient must meet.

TABLE 11.—INGREDIENT HAZARDS—Continued

Examples of ingredient	B	C	P	Description of biological, chemical, or physical hazard for the ingredient	Controls or preventive measures
Mechanically deboned product	X	....	X	—growth of pathogens due to improper handling and storage. —foreign particle contamination, e.g., bone particles.	—Product temperature must be 40 degrees F or less at receiving. —Product must meet establishment purchase specifications. —Product must be produced under a HACCP plan.
Mold inhibitors	....	X	....	—toxicological effect if improper amounts used.	—Ingredient specification sheet identifying the required parameters the ingredient must meet.
Mushrooms	X	X	X	—contamination from inherent microorganisms. —contamination from agricultural chemicals. —foreign material	—Ingredient specification sheet identifying the required parameters the ingredient must meet. —Where applicable, ingredients must be pathogen-free.
Nuts	X	X	X	—contamination from inherent microorganisms. —contamination from agricultural chemicals. —foreign particle contamination, e.g., broken shells.	—Ingredient specification sheet identifying the required parameters the ingredient must meet.
Packaging materials	....	....	X	—toxicological effects	—Use only FDA approved packaging materials. — Each lot of packaging material must be accompanied by a Letter of Guarantee in which the manufacturer attests to compliance with FDA requirements.
Phosphates	....	X	....	—toxicological effect if limits are exceeded.	—Ingredients purchased under a Letter of Guarantee. —Ingredients purchased based on producer/provider ingredient specifications.
Poultry (fresh, frozen)	X	....	....	—growth of pathogens due to improper handling and storage.	—Product temperature must be 40 degrees F or less at receiving. —Product must meet establishment purchase specifications. —Product must be produced under a HACCP plan.
Pork (fresh, frozen)	X	....	....	—growth of pathogens due to improper handling and storage.	—Product temperature must be 40 degrees F or less at receiving. —Product must meet establishment purchase specifications. —Product must be produced under a HACCP plan.
Proteolytic enzymes—Aspergillus oryzae, Aspergillus, Flavusoryzae group, Bromelin, Ficin, Papain.	....	....	....	—toxicological effects if limits exceeded	—Ingredients purchased under a Letter of Guarantee. —Ingredients purchased based on producer/provider ingredient specifications.
Partially defatted products	X	....	X	—growth of pathogens due to improper handling and storage. —foreign particle contamination, e.g., metal, plastic.	—Product temperature must be 40 degrees F or less at receiving. —Product must meet establishment purchase specifications. —Product must be produced under a HACCP plan.
Seafood (fresh, frozen)	X	X	....	—growth of pathogens due to improper handling and storage. —environmental contamination	—Product temperature must be 40 degrees F or less at receiving. —Product must meet establishment purchase specifications. —Product must be produced under a HACCP plan.
Spices/herbs—Sterilized, Unsterilized	X	....	....	—contamination from microorganisms inherent to the ingredient. —contamination from agricultural chemicals. —foreign material	—Ingredient specification sheet identifying the required parameters the ingredient must meet.
Sweeteners—Saccharin, Citric acid, Malic acid, Monoisopropyl citrate, Phosphoric acid, Monoglyceride citrate.	....	....	....	—toxicological effects if limits exceeded	—Ingredients purchased under a Letter of Guarantee. —Ingredients purchased based on producer/provider ingredient specifications.

TABLE 11.—INGREDIENT HAZARDS—Continued

Examples of ingredient	B	C	P	Description of biological, chemical, or physical hazard for the ingredient	Controls or preventive measures
Tenderizing agents	....	X	....	—toxicological effects if limits exceeded	—Ingredients purchased under a Letter of Guarantee. —Ingredients purchased based on producer/provider ingredient specifications.
Variety meats	X	....	....	—growth of pathogens due to improper handling, storage, or cleaning.	—Product temperature must be 40 degrees F or less at receiving. —Product must meet establishment purchase specifications. —Product must be produced under a HACCP plan.
Vegetables	X	X	X	—growth of pathogens due to improper handling and storage. —contamination from agricultural chemicals. —foreign material	—Ingredient specification sheet identifying the required parameters the ingredient must meet.

Section VII

Table 12.—Processing Hazards and Controls

Use of Information

This section contains a list of processing hazards and controls commonly used in making meat and poultry products. They are listed in alphabetical order. For each processing step, shown in the 1st column, you will find an ''X'' in the next three columns to tell you if there is a Biological hazard in column 2, Chemical hazard in column 3, or Physical hazard in column 4. Column 5 describes the hazard(s), and the last column lists some relevant controls or preventive measures. This table should be used in conjunction with the process flow diagram developed by your HACCP team for the products produced during the process under consideration.

TABLE 12.—PROCESSING STEP HAZARDS

Processing steps	B	C	P	Description of biological, chemical, or physical hazards for the process steps	Controls or preventive measures
Acidifying (also see Pickling, Brining)	X	....	....	—survival of pathogens due to final pH>4.6.	—Shelf-stable non-heat treated acidified product must obtain a pH of 4.6 or lower.
Aging (Meats)	X	....	....	—growth/survival of pathogens from inappropriate storage temperatures and humidity (inadequate product water activity (a_w)). —growth of pathogens due to rise in the pH due to development of surface molds.	—The temperature of the aging room will not exceed 40 degrees Fahrenheit. —Product temperature does not exceed 40 degrees Fahrenheit throughout the aging process. —The aging process will not exceed seven days.
Boning	X	....	....	—contamination by pathogens in product accumulations (e.g., cutting boards, conveyor belts, utensils and other equipment). —cross-contamination of product by equipment/utensils contaminated with pathogens when cutting through a non-apparent lesion (e.g., abscesses). —contamination from bones, cartilage/extraneous material.	—Careful employee practices to make sure that there is no contamination of the product. —Equipment and utensils are washed and sanitized immediately when contaminated and each time the employee leaves the working station. —All hot water sanitizers are maintained at 180 degrees Fahrenheit. —Processing room temperature is maintained at 50 degrees Fahrenheit, or a midshift cleanup is performed within five hours after operations begin. —A boneless beef re-inspection procedure will be established using specifications outlined by FSIS.
Cooling	X	....	....	—growth of pathogens due to improper temperatures. —germination of spore-forming pathogens due to slow chilling (e.g., *C. perfringens*).	Cooked product will be cooled according to established procedures.
Cooking	X	....	....	—survival of pathogens due to improper procedures.	—Time/Temperature combinations are adequate to destroy the pathogens of concern.

TABLE 12.—PROCESSING STEP HAZARDS—Continued

Processing steps	B	C	P	Description of biological, chemical, or physical hazards for the process steps	Controls or preventive measures
Drying (Meat)	X	....	....	—bacterial growth due to inadequate control over time, temperature and humidity.	—A water activity will be specified that in conjunction with other barriers will inhibit growth of pathogenic microorganisms (e.g., for shelf stable sausage A_w of 0.91 and a pH of 4.6).
Filling	X	....	....	—recontamination by pathogens in product accumulations. —growth of pathogens due to temperature abuse.	—Product will be protected from contamination during the filling process, and product temperature/ time will be maintained at or below the maximum determined to inhibit growth of pathogenic microorganisms.
	....	X	....	—contamination from lubricants	—No lubricants or other chemical contaminants will be allowed in or on the product.
Formulation	X	....	....	—contamination by employee handling —incorrect formulation —contamination through damaged packages.	—Careful employee practices used at all times to make sure that there is no contamination of product. —Ingredient packages will be clean and intact. —Ingredients will be added to product according to requirements outlined 9CR § 318.7.
	....	X	....	—excessive addition of restricted ingredients/ additives could be toxic to the consumer.	—Restricted ingredients will be added to product according to requirements outlined in the 9CFR § 317.8.
Freezing (Meats)	X	....	....	—survival of parasites due to improper time/temperature application. —growth of pathogens due to temperature abuse.	—Rapid cooling and freezing.
Grinding	X	....	....	—contamination by employee handling —recontamination by pathogens in product accumulations.	—Careful employee practices to make sure that there is no contamination of product. —Product will not be allowed to accumulate at the end of the grinder. —The temperature of the grinding room will be maintained at 50 degrees Fahrenheit.
Grinding	....	X	....	—contamination from lubricants	—Food grade lubricants will be used on areas of the machinery where a potential for product contamination exists.
	....	....	X	—contamination from extraneous material	—All boneless product will be re-inspected before being loaded into the grinder.
Handling and Inspecting of Empty Containers and Packaging Materials.	X	X	X	—recontamination through damaged or soiled containers/packaging material.	—Packaging materials and empty containers will be protected from contamination during their storage and handling. —No materials or containers that appear to be contaminated with hazardous foreign material will be used.
Mechanical Separating	X	....	....	—growth of pathogens	—Product holding and cooling requirements outlined in 9CFR 318.18 will be followed.
			X	—contamination from bone, cartilage fragments. —contamination from extraneous material	—The finished product will meet the standards outlined in 9CFR 319.5 for bone particles and calcium.
Packaging (also see Modified Atmosphere Packaging, Vacuum Packaging Seaming, Sealing).	X	X	X	—contamination from packaging material —contamination through damaged containers.	—Closure and/or machine specifications sufficient to ensure adequate barrier formation.
	....	....	X		—No detectable foreign material will be allowed in or on the product or immediate product containers.
Peeling	X	....	....	—contamination by pathogens in product accumulations. —contamination from employee handling	—Careful employee practices to make sure that there is no contamination of product. —Product will not be allowed to accumulate in/on peeling equipment.
	....	....	X	—contamination from harmful extraneous material.	—Peeling equipment will be maintained in a proper operating condition. No foreign material in the finished product.

TABLE 12.—PROCESSING STEP HAZARDS—Continued

Processing steps	B	C	P	Description of biological, chemical, or physical hazards for the process steps	Controls or preventive measures
Receiving	X	....	....	—contamination through damaged containers. —growth of pathogens due to inappropriate storage conditions (temperature, humidity). —growth of pathogens due to temperature abuse. —contamination from receiving equipment (pumps, hoses).	—Product must be received in sound containers and at temperatures appropriate for the type of product.
	....	X	....	—cross-contamination from non-food chemicals.	—Product must be received in sound containers and be accompanied by a letter of guarantee from the supplier if such letter is not on file.
	....	X	....	—contamination from hazardous extraneous material (wood, nails from pallets, plastic pieces).	—Product must be received in sound containers and be accompanied by a letter of guarantee from the supplier if such letter is not on file.
Retorting	X	....	....	—inadequate application of scheduled process.	—A thermal process specific to the product, container type and size, and retorting system must be in use. The initial product temperature and any critical factors specified for the thermal process must also be controlled. Specified retort come up procedures will be followed.
Reworking	X	....	....	—contamination by employee handling ... —contamination by pathogens in product accumulations.	—Careful employee practices to make sure that there is no contamination of product. —Room temperature of storage coolers will not exceed 40 degrees Fahrenheit.
	....	....	X	—contamination foreign material	—Careful employee practices to make sure that there is no contamination of product.
Shipping	X	....	....	—growth due to improper temperatures	—Product will not be shipped unless it is 40 degrees Fahrenheit or less. —Product will not be loaded into transport vehicles if the trailer temperature exceeds 40 degrees Fahrenheit.
	....	....	X	—contamination from hazardous extraneous material through damaged packages.	—All product packages will be intact before shipping. —All transport vehicles will be cleaned after each use and before loading of product.
Thawing	X	....	....	—growth of pathogens due to improper temperatures.	—Thawing Room temperature will not exceed 50 degrees Fahrenheit.

Section VIII

REFERENCES

Hazard Analysis Critical Control Point Systems

Agriculture Canada. Food Safety Enhancement Program—Implementation Manual. Nepean, Ontario, Canada.

HACCP: The Hazard Analysis and Critical Control Point System in the Meat and Poultry Industry. 1994. American Meat Institute Foundation. Washington, D.C.

International Commission on Microbiological Specification for Foods. 1989. ''Microorganisms in Foods 4. Application of hazard analysis and critical control point (HACCP) system to ensure microbiological safety and quality.'' Blackwell Scientific Publications, Boston.

National Advisory Committee on Microbiological Criteria for Foods (NACMCF).

March 20, 1992—Hazard Analysis and Critical Control Point System.

Int. J. Food Micr. 16: 1–23.

National Advisory Committee on Microbiological Criteria for Foods (NACMCF). June 1993—Report on Generic HACCP for Raw Beef. Food Micr. 10: 449–488.

Pierson, M.D. and Corlett, D.A., Jr. ed. 1992. ''HACCP/Principles and Applications.'' Van Nostrand Reinhold.

Stevenson, K.E. ed. 1993. ''HACCP-Establishing Hazard Analysis Critical Control Point Programs.'' A Workshop Manual. The Food Processors Institute. Washington, D.C.

Tompkin, R.B. 1990. The Use of HACCP in the Production of Meat and Poultry Products. J. of Food Protect. 53(9): 795–803.

Tompkin, R.B. 1995. The use of HACCP for producing and distributing processed meat and poultry products. In Advances in Meat Research. Volume 10. Hazard Analysis Critical Control Point (HACCP) in Meat, Poultry and Seafoods. Chapman & Hall (In Press).

Foodborne Illnesses

Bean, N.H. and Griffin, P.M. 1990. Foodborne disease outbreaks in the United States, 1973–1987: Pathogens, vehicles, and trends. J. Food Protect. 53: 804–817.

Bean, N.H. and Griffin, P.M. 1990. Foodborne disease outbreaks, 5-year summary, 1983–1987. J. Food Protect. 53: 711.

Council for Agricultural Science and Technology. ''Risks Associated with Foodborne Pathogens.'' February 1993.

Oblinger, J.L., ed. 1988. Bacteria Associated with Foodborne Illnesses, A Scientific Status Summary by the Institute of Food Technologists Expert Panel on Food Safety and Nutrition. Food Technol. 42(4).

Padhye, N.V.; Doyle, M.P. 1992. E. Coli O157:H7 Epidemiology, pathogenesis, and methods for detection in food. J. Food Prot. 55:55–565.

Schuchat, A., Swaminathan, B. and Broome, C.V. 1991. Epidemiology of human listeriosis. Clin. Microbiol. Rev. 4: 169–183.

Tauxe, R.V., ''Epidemiology of *Camplyobacter jejuni* infections in the United States and other Industrialized Nations,'' In Nachamkin, Blaser, Tompkins, ed. *Camplyobacter jejuni:* Current Status and Future Trends, 1994, chapter 2, pages 9–19.

Tauxe, R.V., Hargett-Bean, N., Patton, C.M. and Wachsmuth, I.K. 1988. Campylobacter isolates in the United States, 1982–1986. In, CDC Surveillance Summaries, June 1988. MMWR 37 (No. SS–2) : 1–13.

Todd, E. 1990. Epidemiology of Foodborne Illness: North America. The Lancet 336:788.

Microbiological, Chemical, and Physical Hazards

Corlett, D.A., Jr. and R.F. Steir. 1991. Risk assessment within the HACCP system. Food Control 2:71–72.

Environmental Protection Agency. 1992. Tolerances for Pesticides in Foods. Title 40, Code of Federal Regulations, Part 185. U.S. Government Printing Office, Washington, DC.

FDA. 1989. The Food Defect Action Levels. FDA/CFSAN. Washington, DC.

FDA. 1994. Fish and Fishery Products Hazards and Control Guide—Get Hooked on Seafood Safety. Office of Seafood, Washington, DC.

HACCP: The Hazard Analysis and Critical Control Point System in the Meat and Poultry Industry. 1994. American Meat Institute Foundation, Washington, DC.

International Commission on Microbiological Specification for Foods. 1989. ''Microorganisms in Foods 4. Application of hazard analysis and critical control point (HACCP) system to ensure microbiological safety and quality.'' Blackwell Scientific Publications, Boston.

Pierson, M.D. and Corlett, D.A., Jr. ed. 1992. ''HACCP/Principles and Applications.'' Van Nostrand Reinhold.

Stevenson, K.E. ed. 1993. ''HACCP-Establishing Hazard Analysis Critical Control Point Programs.'' A Workshop Manual. The Food Processors Institute. Washington, DC.

USDA, 1994. Domestic Residue Data Book: 1993. USDA, FSIS, Washington, DC.

USDA, 1994. List of Propriety Substances and Nonfood Compounds Authorized for Use under USDA Inspection and Grading Programs. USDA, FSIS, Washington, DC.

USDA, 1995. National Residue Program Plan: 1995. USDA, FSIS, Washington, DC.

Internet Home Pages

Agriculture Canada/http://aceis.agr.ca

Food Law Sites/http://www.fsci.umn.edu/FoodLaw/foodlaw.html

HACCP95/http://www.cvm.uiuc.edu/announcements/haccp95/haccp95.html

Center for Disease Control/http://fftp.cdc.gov/pub/mmwr/MMWRweekly

Material Safety Data Sheets/http://listeria.nwfsc.noaa.gov/msds.html

U.S. Food and Drug Administration/http://vm.cfsan.fda.gov/list.html Bad Bug Book

U.S. Department of Agriculture/http://www.usda.gov

Appendix E—FSIS Sample Collection Guidelines and Procedure for Isolation and Identification of Salmonella from Raw Meat and Poultry Products

Introduction

This sampling protocol has been prepared to support the Pathogen Reduction/HACCP Regulation. FSIS will be conducting a *Salmonella* testing program in support of this regulation. The regulation does not require establishments to conduct their own testing for *Salmonella*. However, for those who choose to conduct their own *Salmonella* testing program, the protocol outlined in this document provides detailed instruction for sample collection and analysis that are the same as those used in the FSIS *Salmonella* testing program for raw meat and poultry products.

This protocol incorporates the use of a non-destructive sampling technique for sample collection of raw beef and swine carcasses. These techniques have been evaluated by the Agricultural Research Service and have been designed to give comparable results to the FSIS Nationwide Microbiological Baseline Data Collection Programs' excised tissue samples. We are continuing to improve the sponging techniques and welcome comments. This technique will be closely monitored during the first year of prevalence phase *Salmonella* testing. Carcass sampling for broiler and turkey carcasses remain the nondestructive whole bird rinse which was used in the Baseline Programs. Ground product sampling involves collecting approximately ½ pound of the product.

The analytical methods section of this protocol details the cultural procedures currently in use by FSIS/USDA for the examination of raw meat and poultry products for *Salmonella*. Any screening method under consideration for *Salmonella* testing must meet or exceed the following performance characteristics: sensitivity = ≥97%, specificity ≥96%, false-negative rate = 3%, false-positive rate ≤4%.

Guidelines for Sample Collectors/Microbiologists

Pre-Sampling Preparation

Prior to collecting samples, the individual designated for sample collection should compile a written establishment-specific sample collection protocol for microbiological analysis. This protocol should include a check list for tasks to be performed prior to sample collection, materials needed for sample collection, random selection procedures, where the samples will be analyzed (on-site versus off-site), and other information that will aid the sample collector. Sampling supplies, such as sterile gloves, sterile sampling solutions, hand soap, sanitizing solution, etc., as well as specific materials needed for sampling different carcass types (i.e., specimen sponges in bags, if sampling cattle or swine carcasses), will need to be assembled.

For cattle and hog carcass sampling, a template will be needed to mark off the area to sample (Figure 1). The template can be made of metal or aluminum foil, brown paper, etc. From a sheet larger than the area to be sampled, cut out a 10 cm (3.94 inches) x 10 cm square for sampling cattle or a 6 cm x 10 cm rectangle for swine carcass sampling. If a reusable metal template is used, it will need to be sanitized with an approved sanitizing solution (e.g. hypochlorite (bleach) solution or alcohol). However, the template needs to be dry before placing it on the carcass. Aluminum foil or paper templates can be used once and discarded. The foil for the template should be stored in a manner to prevent contamination. Since the area enclosed by the template will be sampled, take care not to touch this area with anything other than the sampling sponge. Using dirty or contaminated material may lead to erroneous results. If an autoclave is available, paper or aluminum foil templates can be wrapped in autoclavable paper and sterilized.

The sterile sampling solution, Buffered Peptone Water (BPW), can be stored at room temperature. However, at least one day prior to sample collection, check solutions for absence of cloudiness and/or turbidity and place the number of containers of sampling solution (BPW) that will be needed for the next day's sampling in the refrigerator. DO NOT use solutions that are cloudy, turbid, or contain particulate matter.

To obtain the most accurate results, samples should be analyzed as soon after collection as possible. However, if samples must be transported to an off-site laboratory, the samples need to be

maintained at refrigeration temperatures until transport, then shipped refrigerated via an overnight delivery service to the laboratory performing the analysis. Samples analyzed off-site must be picked up by the overnight courier the SAME calendar day the sample is collected. The sample must arrive at the laboratory no later than the day after the sample is collected. Samples shipped to an outside laboratory must be analyzed no later than the day after collection. The following section gives information on shipping containers and transporting samples to off-site facilities.

Shipping Containers and Coolant Packs

It is important that samples fit easily into the shipping so that the sample bags do not break.

Correct use of the refrigerant gel-ice packs and proper packing of the shipping container are necessary so that samples arrive at the laboratory at an acceptable temperature. Frozen samples or samples which are too warm are not considered valid and must not be analyzed. Some bacteria may be damaged by temperatures that are too cold. Temperatures that are too warm can allow bacteria to reproduce. Maintaining samples at improper temperatures may cause inaccurate sample results.

The sample should be kept refrigerated, NOT FROZEN, in the shipping container prior to pickup by the courier. The shipping container, itself, should not be used as a refrigerator. However, multiple samples (if needed) for that day may be stored in the open shipping container in the cooler or refrigerator.

Random Selection of Carcasses or Ground Product for Sampling

Samples are to be taken randomly. There are different methods of selecting the specific carcass for sampling that could be used but all require the use of random numbers. Methods could include: using random number tables, drawing cards, using calculator- or computer-generated random numbers, etc. When selecting the random numbers, use the method(s) currently in use at the establishment for other sampling programs, if other programs are currently underway.

The carcass or ground product for sampling must be selected at random from all eligible carcasses. If multiple lines exist, randomly select the line for sample collection for that interval. Repeat the random selection process for the next sampling interval. Each line should have an equal chance of being selected at each sampling interval.

Cattle Carcass Selection

The half-carcasses eligible for sampling should be selected from those in the cooler 12 or more hours after slaughter. Both the ''leading'' and ''trailing'' sides of a carcass should have an equal chance of being selected. NOTE: If more than one shift is operating at the plant, the sample can be taken on any shift, provided the following requirements are met:

Selection of TIME: Determine the times that carcasses chilled for 12 or more hours will be on hand. Then randomly select a time for collecting samples. If samples are shipped off-site, then take into account that the delivery service may have limitations on pickup times.

Selection of COOLER SITE: Select a safe and accessible site in the cooler for random selection of the half-carcass. This site may be located at the transfer chain, grading chain, or a rail that contains carcasses that have been chilled 12 hours or more.

Selection of HALF–CARCASS: At the random time selected, identify a half-carcass (selected by your random number method) from the predetermined point along the chain (selected cooler site) and then count back five (5) half-carcasses and select the next half-carcass (carcass) for sampling. The reason for counting back five half-carcasses is to avoid any possible bias during selection.

Swine Carcass Selection

The carcasses eligible for sampling should be selected from those in the cooler 12 or more hours after slaughter. Every carcass should have an equal chance of being selected.

Note: If more than one shift is operating at the plant, the sample can be taken on any shift, provided the following requirements are met:

Selection of TIME: Determine the times that carcasses chilled for 12 or more hours will be on hand. Then randomly select a time for collecting samples. If samples are shipped off-site, then take into account that the delivery service may have limitations on pickup times.

Selection of COOLER SITE: Select a safe and accessible site in the cooler for random selection of the carcass. This site may be located at the transfer chain, or a rail that contains carcasses that have been chilled 12 hours or more. If there are multiple sites of the same kind, select one at random.

Selection of CARCASS: At the random time selected, identify a carcass (selected by your random number method) from the predetermined point along the chain and then count back five (5) carcasses and select the next carcass for sampling. The reason for counting back five carcasses is to avoid any possible bias during selection.

Poultry Carcass Selection

The poultry carcasses will be selected at random after chilling, at the end of the drip line or last readily accessible point prior to packing/cut-up. A WHOLE carcass is required, that is, one that has not been trimmed.

Note: If more than one shift is operating at the plant, the sample can be taken on any shift, provided the following requirements are met:

Selection of TIME: Determine the times that chilled carcasses will be on hand, then randomly select a time for collecting samples. If samples are shipped off-site, then take into account that the delivery service may have limitations on pickup times.

Selection of CHILLER: If more than one chiller system is in operation at the time of sample collection, the chill tank from which the sample is selected must be randomly selected.

Selection of POULTRY CARCASS: At the random time, identify a carcass (selected by your random number method) from the predetermined point, and then count back five (5) carcasses and select the next carcass for sampling. Exception: If the fifth carcass is not a WHOLE (untrimmed) bird, count back an additional five carcasses for sample selection. Remember: Each carcass must have an equal chance of being selected. The reason for counting back five carcasses is to avoid any possible bias during selection.

Raw Ground Product Selection (Beef, Pork, Chicken, Turkey)

Raw ground product samples will be randomly selected and collected after the grinding process and, if possible before any addition of spices or seasonings, but prior to final packaging.

Note: If more than one shift is operating at the plant, the sample can be taken on any shift, provided the following requirements are met:

Selection of TIME: Determine the times that raw ground product will be produced, then randomly select a time for collecting samples. Take into account that the overnight delivery service may have limitations on pickup times, for determining sample collection time.

Selection of GRINDER: If more than one grinder is in operation at the time of sample collection, the grinder from which the sample is selected must be randomly selected.

Aseptic Techniques/Sampling

Extraneous organisms from the environment, hands, clothing, sample containers, sampling devices, etc., may lead to erroneous analytical results. Stringent requirements for microbiological analysis are necessary, therefore, use of aseptic sampling techniques and clean sanitized equipment and supplies are of utmost importance. The following information gives general techniques for aseptic techniques that are routinely used during sample collection for microbiological analysis.

There should be an area designated for preparing samples, etc. A stainless steel, wheeled cart or table would be useful during sampling. A small tote or caddy could be could be easily transported to the location of sampling and used for carrying supplies, supporting sample bags when adding sterile solutions to sample bags, etc.

Sterile gloves should be used for collecting samples. The only items which may contact the external surface of the glove are the exposed sample being collected and/or the sterile sample utensil (specimen sponge). Keep in mind that the outside surfaces of the sample container are not sterile. Do not handle the inside surface of the sterile sample containers. Do not touch anything else. The following procedure for putting on sterile gloves can be followed when collecting samples:

(a) Peel open the package of sterile gloves from the top without contaminating (touching, breathing on, contacting, etc.) the exterior of the gloves.

(b) Remove a glove by grasping it from the wrist-side opening inner surface which is folded. Avoid any contact with the outer surface of the glove. Insert the washed and sanitized hand into the glove, taking care not to puncture the glove or touch the outside surface of the glove.

(c) Next, follow the same procedure for the hand you will use to physically handle the sample, using care not to contaminate the outer surface of the glove.

(d) If at any time you are concerned that a glove may be contaminated, discard it and begin again with Step (a) above.

Preparation for Sample Collection

Prior to collecting samples, review steps for sample collection, random selection procedure, etc.

At least one or more days prior to sample collection, check sampling solution (BPW) for cloudiness/turbidity and refrigerate if not cloudy or turbid. If shipping samples to off-site facility, place coolant packs in freezer then pre-chill open shipping in cooler/refrigerator.

On the day of sampling, gather all sample collection bags, sterile gloves, sanitizer, hand soap, sterile solutions for sampling, and specific materials listed under the *Materials* section of the sample collection section for the type of carcass to be sampled.

Label the sample bags before starting sampling procedure. Use permanent ink. If you are using paper labels, it is important that the label be applied to the bag at normal room temperature; it will not stick if applied in the cooler.

Outer clothing (frocks, gloves, head gear, etc.) worn in other areas of the plant should be removed before entering the sampling area or preparing to collect samples. Replace outer clothing removed earlier with clean garments (i.e. laboratory coat) that have not been directly exposed to areas of the plant outside of the sampling area.

Sanitize the sample work area surfaces by wiping with a clean disposable cloth or paper towel dipped in a freshly prepared 500 ppm sodium hypochlorite solution (0.05% sodium hypochlorite) or other approved sanitizer which provides an equivalent available chlorine concentration. The sample work area surfaces must be free of standing liquid before sample supplies and/or product containers are placed on them.

Before sampling, thoroughly wash and scrub hands to the mid-forearm. Use antibacterial hand soap. If available, this should include a sanitizer at 50 ppm equivalence available chlorine. Dry the hands using disposable paper towels.

Specific Sample Collection Procedures

Raw Ground Product

Materials

1. 2 sterile ziplock-type or stomacher bags or equivalent.
2. Sterile gloves.
3. Plastic cable-tie-wrap or thick rubber band for securing bag.

Collection

Ensure that all supplies are on hand and readily available. Use the predetermined random selection procedure to select sample. Samples of raw ground product will be collected after the grinding process, and, if possible, before the addition of any spices or seasonings, but prior to final packaging.

1. Put on sterile gloves.
2. Aseptically collect approximately ½ pound of ground product, if possible, before the addition of any spices or seasonings, but just prior to final packaging. (Sample will be about the size of an orange.) Use the sterile sampling bag, taking care not to contaminate the inside of the bag with your gloved hand.
3. Close the bag tightly by twisting the top and securing it with the plastic cable-tie-wrap or rubber band or securely closing the ziplock-type bag.
4. Place bagged sample inside a second bag and close the outer bag tightly.
5. (a) If samples are to be analyzed at an ON–SITE LABORATORY, begin sample preparation for analysis.

(b) If samples are to be analyzed at an OUTSIDE (OFF–SITE) LABORATORY, follow the procedure in the Sample Shipment section.

Cattle Surface Sample Collection Procedure

Materials

1. Sterile specimen sponge in sterile Whirl-Pak® bag or equivalent
2. 10 ml sterile Buffered Peptone Water (BPW)
3. Sterile ziplock-type or stomacher bag
4. Template for a 100 cm^2 sampling area
5. Sterile gloves
6. Wheeled ladder, sampling platform, or step ladder
7. Sanitizing solution
8. Small tote or caddy for carrying supplies

Collection

A sterile, moistened sampling sponge (which usually come pre-packaged in a sterile bag) will be used to sample all three sites on the swine carcass (ham, belly, and jowls—see Figure 3). It is important to swab the sampling areas in the order of least to most contaminated to avoid spreading any contamination on the carcass. Therefore, swab sampling areas in the sequence indicated in this protocol. Use predetermined random selection procedures for selecting carcass to be sampled. Remember: samples will be collected from carcasses in the cooler 12 hours or more after slaughter. Nondestructive surface sampling will be conducted as follows:

1. Ensure that all bags have been pre-labeled and all supplies are on hand, including the sampling template. (An assistant may be helpful during the sampling process.)
2. Position the wheeled ladder, sampling platform, or step ladder near the carcass so the rump sample area (Figure 2) is within easy reach from the ladder.
3. IF a reusable template is used, have the assistant immerse the sampling

template in a sanitizing solution for at least 1–2 minutes. Just prior to taking the first sample on the carcass, have the assistant put on a pair of gloves (taking care not to contaminate the outer surface of the glove with fingers) and retrieve the sampling template from the sanitizing solution. Shake excess solution from utensil, then protect the portion of the template that will contact the carcass from contamination.

4. Locate the flank, rump, and brisket sampling sites using illustrations and directions in Figure 2 (cattle carcass sampling locations).

5. To hydrate the sponge, open the sponge bag. Remove cap from sterile BPW bottle, being careful not to touch the bottle opening. Carefully pour the contents of the sterile BPW bottle (10 ml) into the sponge bag to moisten the sponge.

6. Close the top of the bag. Use hand pressure from the outside of the bag and carefully massage the sponge until it is FULLY HYDRATED (moistened).

7. With the bag still closed, carefully push the moistened sponge to the upper portion of the bag orienting one narrow end of the sponge up toward the opening of the bag. Do NOT open the bag or touch the sponge with your fingers.

8. Open the bag containing the sponge, being careful not to touch the inner surface of the bag with your fingers. The wire closure at the top of the bag should keep the bag open. Set bag aside.

9. Put on sterile gloves.

10. Carefully remove the moistened sponge from the bag with your sampling hand. Take care to avoid touching the surfaces of the sampling sponge.

11. With the other hand, retrieve the template by the outer edge taking care to avoid contaminating the inner edges of the sampling area of the template.

12. Locate the flank sampling area (Figure 2) and place template over this location.

13. Hold the template in place with one gloved hand. Take care not to contaminate the enclosed sampling area with your hands.

14. With the other hand, wipe the sponge over the entire enclosed area (10 cm×10 cm) for the sample for a total of approximately 10 times in the vertical and 10 times in the horizontal directions. The pressure for swabbing would be as if you were removing dried blood from the carcass. However, the pressure should not be too hard as to crumble or destroy the sponge. (Note: The template may need to be ''rolled'' from side to side during swabbing since the surface of the carcass is not flat. This ensures that the 100 cm^2 area is enclosed while swabbing.)

15. Repeat steps 13–15 for the brisket area, using the SAME side or surface of the sponge used to swab the flank sampling area.

16. After swabbing the brisket area, transfer the template to the same hand holding the sponge. Do not contaminate the inner edges of the sampling area of the template.

17. Climb the ladder or platform, holding onto the handrail with the hand NOT used to perform swabbing. Once at a convenient and safe height for sampling the rump, transfer template back to ''climbing'' hand (hand used to hold onto the rail while climbing the ladder), taking care not to contaminate the inner edges of the sampling area of the template. Avoid contaminating your sampling hand.

18. Repeat steps 13–15 for the rump area, using the ''clean'' surface or side (the side that was NOT previously used to swab the flank/brisket areas).

19. After swabbing the rump area, carefully place the sponge back in the sample bag, taking care not to touch the outside of the sponge to the outside of the sample bag.

20. While holding the handrail, climb down from the ladder.

21. Expel excess air and fold the top edge of the bag containing the sponge 3 or 4 times to close. Secure the bag by folding the attached wire tie back against the bag.

22. (a) If samples are to be analyzed at an ON-SITE LABORATORY, begin sample preparation (ANALYTICAL METHODS section)

(b) If samples are to be analyzed at an OUTSIDE (OFF-SITE) LABORATORY, follow procedure in the Sample Shipment section.

Swine Surface Sample Collection Procedure

Materials

1. Sterile specimen sponge in sterile Whirl-Pak® bag or equivalent
2. 10 ml sterile Buffered Peptone Water (BPW)
3. Sterile Ziplock-type or stomacher bag
4. Template for a 100 cm^2 sampling area
5. Sterile gloves
6. Wheeled ladder, sampling platform, or step ladder
7. Sanitizing solution
8. Small tote or caddy for carrying supplies

Collection

Read the sections under Pre-sampling Preparation and Preparation for Sample Collection before beginning the sampling procedure. A sterile, moistened sampling sponge (which usually come pre-packaged in a sterile bag) will be used to sample all three sites on the swine carcass (ham, belly, and jowls—see Figure 3). It is important to swab the sampling areas in the order of least to most contaminated to avoid spreading any contamination on the carcass. Therefore, swab sampling areas in the sequence indicated in this protocol. Use predetermined random selection procedures for selecting carcass to be sampled. Remember: samples will be collected from carcasses in the cooler 12 hours or more after slaughter.

Nondestructive surface sampling will be conducted as follows:

1. Ensure that all supplies are on hand. (An assistant may be helpful during the sampling process.)

2. Position the wheeled ladder, sampling platform, or step ladder near the carcass so the ham sample area (Figure 3) is within easy reach from the ladder.

3. Immerse the sampling template in a sanitizing solution for at least 1–2 minutes. Just prior to swabbing the first sampling site on the carcass (step 1), retrieve the sampling template from the hypochlorite sanitizing solution. Shake excess solution from utensil, then protect the portion of the template (especially the inner edges of the sampling area) that will contact the carcass from contamination.

4. Locate the ''belly'', ham, and jowl sampling sites using illustrations and directions in Figure 3 (swine carcass sampling locations).

5. Open the sponge bag by holding the bag at one corner by the wire closure (which is usually colored yellow) then tear off the clear, perforated strip at the top of the bag. (Do not remove or tear off the wire closures). Next, pull apart the two small white tabs on either side of the bag to open the mouth of the bag.

6. Remove cap from sterile BPW tube, being careful not to touch the bottle opening. Carefully pour the entire contents of the BPW bottle (10 ml) into the sponge bag to moisten the sponge.

7. Close the top of the bag by pressing the wire closures together. Use hand pressure from the outside of the bag and carefully massage the sponge until it is FULLY HYDRATED (moistened).

8. With the bag still closed, carefully push the moistened sponge to the upper portion of the bag positioning one narrow end of the sponge up toward the opening of the bag. The whole sponge should still be inside the bag.

9. Open the top of the bag containing the sponge, being careful not to touch the inner surface of the bag with your fingers. The wire closure at the top of

the bag should keep the bag open. Set bag aside.

10. Put on a pair of sterile gloves.

11. Carefully remove the moistened sponge from the bag with your sampling hand. Take care not to touch the surfaces of the sampling sponge intended for sampling with sterile glove.

12. With the other hand, retrieve the template by the outer edge, taking care not to contaminate the inner edges of the sampling area of the template.

13. Locate the ''belly'' sampling area (Figure 2) and place the template over this location.

14. Hold the template in place with one gloved hand (Remember, only the sponge should touch the sampling area. Take care not to contaminate this area with your hands).

15. With the other hand, wipe the sponge over the entire enclosed area (10 cm × 10 cm) for the sample for a total of approximately 10 times in the vertical and 10 times in the horizontal directions. The pressure for swabbing would be as if you were removing dried blood from the carcass. However, the pressure should not be too hard as to crumble or destroy the sponge. (Note: The template may need to be ''rolled'' from side to side during swabbing since the surface of the carcass is not flat. This ensures that the 100 cm^2 area is enclosed while swabbing.)

16. After swabbing the ''belly'' area, transfer the template to the same hand that is holding the sponge. Do not contaminate the inner edges of the sampling area of the template.

17. Climb the ladder or platform, holding onto the handrail with the hand not used for sampling. Once at a convenient and safe height for sampling the ham, transfer template back to the ''climbing'' hand (hand used to hold onto the rail while climbing the ladder), taking care not to contaminate the inner edges of the template. Avoid contaminating your sampling hand.

18. Repeat steps 13–15 for the ham sampling area, using the SAME surface of the sponge used to swab the ''belly'' area.

19. After swabbing the ham area, carefully place the template back to the same hand that is holding the sponge. Do not contaminate the inner edges of the sampling area of the template.

20. While holding the handrail with the hand not used for sampling, climb down from the ladder.

21. Transfer the template back to the ''climbing'' hand (hand used to hold onto the rail while descending the ladder), taking care not to contaminate the inner edges of the template.

22. Repeat steps 13–15 for the the jowl area, using the ''clean'' surface or side (the side that was NOT previously used to swab the ''belly''/ham areas).

23. After swabbing the jowl area, carefully place the sponge back into the sponge bag. Do not touch the surface of the sponge to the outside of the sponge bag.

24. Press wire closures on the sponge bag together, expel the excess air, then fold over the top of the bag 3 or 4 times. Close the bag with attached wire by bending the wire tie back against the bag to secure it.

25. (a) If samples are to be analyzed at an ON-SITE LABORATORY, begin sample preparation (ANALYTICAL METHODS section).

(b) If samples are to be analyzed at an OUTSIDE (OFF-SITE) LABORATORY, follow procedure in the Sample Shipment section.

Whole Chicken Carcass Rinse Sampling Procedure

Materials

1. 2 Sterile 3500 ml stomacher-type bags or equivalent
2. 400 ml sterile Buffered Peptone Water (BPW)
3. Plastic cable-tie wraps or thick rubber bands or equivalent
4. Sterile gloves

Collection

Read the sections under Pre-sampling Preparation and Preparation for Sample Collection before beginning the sampling procedure. Ensure all sampling supplies are present and have been properly labeled. Use predetermined random selection procedure to select a carcass. Birds will be collected after the chiller, at the end of the drip line as follows:

1. Gather all supplies for sampling. An assistant may be helpful during the sampling process when pouring the rinse solution (BPW) into the bag containing the carcass.

2. Put on sterile gloves. Open a stomacher-type 3500 bag without touching the sterile interior of the bag. Rubbing the top edges between the thumb and forefinger will cause the opening to gap for easy opening.

3. With one hand, push up through the bottom of the sampling bag to form a 'glove' over one hand with which to grab the bird, while using your other hand to pull the bag back over the hand that will grab the bird. This should be done aseptically without touching the exposed interior of the bag.

4. Using the hand with the bag reversed over it, pick up the bird by the legs (hocks) through the stomacher bag. (The bag functions as a ''glove'' for grabbing the bird's legs.) Take care not to contaminate the exposed interior of the bag. Allow any excess fluid to drain before reversing the bag back over the bird. (Alternately, have an assistant hold open the bag. Using your gloved hand, pick up the bird by the legs, allow any fluid to drain, and place the bird vent side up into the sampling bag.)

5. Rest the bottom of the bag on a flat surface. While still holding the top of the bag slightly open, add the 400 ml of sterile BPW to the sterile plastic bag. (Alternately, with the aid of an assistant holding the bag open, add the 400 ml of sterile BPW to the bag, pouring the solution into the carcass cavity.)

6. Close the bag and while securely holding the bag, rinse bird inside and out using a rocking motion for 30 shakes (approximately one minute). This is done by holding the bird through the bottom of the bag with one hand and the closed top of the bag with the other hand. Hold the bird securely and rock it in an arcing motion, alternating the weight of the bird from one hand to the other (motion like drawing an invisible rainbow or arch), assuring that all surfaces (interior and exterior of the carcass) are rinsed.

7. Put the bird in the bag on a flat surface. Open the bag.

8. With a gloved hand, remove the carcass from the bag. Since the carcass was rinsed with a sterile solution, it should be returned to the chill tank. Be sure not to touch the interior of the bag with your gloved hand.

9. Twist the top of the bag several times (about 4 or 5 turns). Fold the twisted portion of the bag to form a loop. Secure the twisted loop with the supplied plastic tie-wrap. The tie-wrap should be very tight so that the rinse fluid will not spill out. Place the sample bag into another bag and secure the opening of the outer bag. [Alternately, at least 30 ml of the rinse fluid can be poured into a sterile, leak-proof sampling container and the container then can be placed in a sampling bag for transport to the lab. NOTE: It is important to send at least the minimum volume of rinse fluid, since 30 ml of rinse fluid will be used for sample analysis. The solution remaining after decanting the 30 ml can be poured down the drain]

10. (a) If samples are to be analyzed at an ON-SITE LABORATORY, begin sample preparation for the selected method of analysis.

(b) If samples are to be analyzed at an OUTSIDE (OFF-SITE) LABORATORY, follow the procedure in the Sample Shipment section.

Turkey Carcass Rinse Sampling Procedure

Materials

1. 1 large sterile 3500 ml stomacher-type or ziplock-type bags or equivalent, at least 8″ × 24″
2. 600 ml sterile, Buffered Peptone Water (BPW)
3. Plastic cable-tie wraps or thick rubber bands or equivalent
4. Sterile gloves

Collection

Read the sections under Pre-sampling Preparation and Preparation for Sample Collection before beginning the sampling procedure. Ensure that all supplies are on hand, labeled, and readily available. An assistant will be needed to hold the bag for collecting the bird. Use the predetermined random selection procedure to select the turkey carcass to be sampled. The randomly selected birds will be collected after the chiller, at the end of the drip line as follows:

1. Have an assistant open the large stomacher-type bag (18″ × 24″). (Rubbing the top edges of the stomacher-type bag between the thumb and index finger will cause the opening to gap.) The assistant should be ready to receive the turkey carcass.
2. Put on sterile gloves.
3. Remove the selected turkey from the drip line by grasping it by the legs and allowing any fluid to drain from the cavity.
4. Place the turkey carcass, vent side up, into a sterile Stomacher-type 3500 bag (or equivalent). Large turkeys should be placed in a plain, clear polypropylene autoclave bag (ca. 24″ × 30–36″). Only the carcass should come in contact with the inside of the bag.
5. While still supporting the carcass with one hand on the bottom of the bag, have the assistant open the bag with the other hand. Alternately, the assistant can rest the bottom of the bag on a sanitized table and while still supporting the carcass, open the bag with the other hand.
6. Add the 600 ml of sterile BPW to the sterile plastic bag, pouring the solution into the carcass cavity of the BPW over the exterior of the carcass. Close the bag.
7. Manipulate the loose neck skin on the carcass through the bag and position it over the neck bone area to act as a cushion and prevent puncturing of the bag. The assistant will need to support the carcass with one hand on the bottom of the bag. Close bag.
8. Squeeze air from the bag and close top. Take the bag from the assistant. Close the bag and while securely holding the bag, rinse bird inside and out using a rocking motion for 30 shakes (approximately one minute). This is done by holding the carcass through the bag with one hand and the closed top of the bag with the other hand. Holding the bird securely with both hands, rock in an arcing motion alternating the weight of the bird from one hand to the other (motion like drawing an invisible rainbow or arch), assuring that all surfaces (interior and exterior of the carcass) are rinsed.
9. Hand the bag back to the assistant.
10. With a gloved hand, remove the carcass from the bag first letting any excess fluid drain back into the bag. Since the carcass was rinsed with a sterile solution, it should returned to the chill tank. Be sure not to touch the interior of the bag with your gloved hand.
11. Expel excess air, taking care not to expel any rinse fluid. Twist the top of the bag several times (about 4 or 5 turns). Fold the twisted portion of the bag to form a loop. Secure the twisted loop with the supplied plastic tie-wrap. The tie-wrap should be very tight so that the rinse fluid will not spill out.
12. Place the sample bag into another bag and secure the opening of the outer bag. [Alternately, no less than 30 ml of the rinse fluid can be poured into a sterile, leak-proof sampling container and placed in a sampling bag for transport to the lab. Thirty ml of rinse fluid will be used for sample analysis. The solution remaining after decanting the 30 ml can be poured down the drain]
13. (a) If samples are to be analyzed at an ON-SITE LABORATORY, begin sample preparation for the selected method of analysis. (See Analytical Methods section.)

(b) If samples are to be analyzed at an OUTSIDE (OFF-SITE) LABORATORY, follow the procedure in the Sample Shipment section.

Sample Shipment

It is recommended that samples be analyzed on-site (not in the plant itself, but in a suitable laboratory). Those samples analyzed on-site must be analyzed as soon after collection as possible. If no on-site facilities are available, the samples must be shipped the same calendar day as collected, to an outside laboratory. The samples must be analyzed the day after collection.

1. Prechill shipping container by placing the open shipping container in the refrigerator at least the day before sampling.
2. Place the appropriately-labeled double-bagged sample in the prechilled shipper in an upright position to prevent spillage. Newspaper may be used for cushioning the sample and holding it in the upright position. Ensure that the sample is maintained at refrigeration temperature to prevent multiplication of any microorganisms present and to provide the most accurate results.
3. Place a corrugated cardboard pad on top of the sample. Next, place the frozen gel pack(s) on top of the corrugated pad to prevent direct contact of frozen gel packs with the sample. Use sufficient frozen coolant to keep the sample refrigerated during shipment to the designated laboratory. Insert a foam plug and press it down to minimize shipper head space.
4. Ship sample (via overnight delivery or courier) to the assigned laboratory.

Analytical Methods

Equipment, Reagents, and Media

Equipment

1. Sterile scalpels, scissors, forceps, knives, spatulas, spoons, ruler or template, pipettes, petri dishes, test tubes
2. Sterile Stomacher 3500 bags (or equivalent) or plain, clear polypropylene autoclave bags (ca. 24″ × 30–36″)
3. Incubator, 36 ± 1°C
4. Incubator/Water bath, 42 ± 0.5°C
5. A mechanical homogenization device. A Stomacher, used with sterile plastic bags, is acceptable. Some laboratories prefer to use a sterile Osterizer-type blender with sterilized cutting assemblies and adapters for use with sterile Mason jars.
6. Water bath, 48–50°C
7. Glass slides, glass plate marked off in one-inch squares or agglutination ring slides
8. Balance, 2000 gram capacity, sensitivity of 0.1 gram
9. Inoculating needles and loops
10. Vortex mixer
11. Sterile sampling sponge and sponge bag

Reagents

1. Iodine solution for TT broth (Hajna)
2. Buffered Peptone Water (BPW) diluent
3. Methyl red reagent
4. O'Meara's V–P reagent, modified
5. Kovac's reagent
6. Ferric chloride, 10% aqueous solution
7. Sterile mineral oil
8. Saline, 0.85%
9. Saline, 0.85% with 0.6% formalin
10. *Salmonella* polyvalent O antiserum
11. *Salmonella* polyvalent H antiserum
12. *Salmonella* individual O grouping sera for groups A–I

Media

1. Buffered peptone water (BPW)
2. Tetrathionate broth (TT-Hajna)
3. Rappaport-Vassiliadis (RV) broth (4)—Merck Chemical Co., Cat. #7700 or equivalent
4. Brilliant green sulfa agar (BGS; contains 0.1% sodium sulfapyridine)
5. Double modified lysine iron agar (DMLIA; 2)
6. Triple sugar iron agar (TSI)
7. Lysine iron agar (LIA)
8. MR–VP Medium
9. Tryptone broth
10. Simmons citrate agar
11. Phenol red tartrate agar
12. Motility Medium
13. Christensen's urea agar
14. Carbohydrate fermentation media with Andrade's indicator
15. Decarboxylase test media (Moeller)
16. Malonate broth
17. KCN broth
18. Phenylalanine agar
19. Nutrient gelatin
20. Trypticase soy broth
21. Tryptose broth

Analytical Procedures

Sample Preparation for Analysis

The diverse nature of the samples which may require analysis (e.g., ground product versus a poultry carcass rinse sample) requires separate preparation procedures for each sample type.

Raw Ground Product Sample Preparation

a. Use a sterile spoon or spatula to take portions of product from several areas of the sample to prepare a 25 g composite sample in a sterile plastic stomacher-type bag or blender jar. Use of a stomacher filter bag may facilitate pipetting after pre-enrichment.

b. Add 225 ml BPW. Homogenize for two minutes in a Stomacher or blender.

Beef or Pork Carcass Sponge Sample Preparation

a. Add 50 ml of BPW to the sample bag containing the sponge to bring the total volume to 50 ml. Mix well.

Whole Chicken Carcass Rinse-Fluid Sample Preparation

a. Remove 30 ml of carcass-rinse fluid and place it in a sterile plastic bag or other sterile container.

b. Add 30 ml of BPW to the sample. Mix well.

Turkey Carcass Rinse-Fluid Sample Preparation

a. Remove 30 ml of carcass-rinse fluid and place it in a sterile plastic bag or other sterile container.

b. Add 30 ml of BPW to the sample. Mix well.

Detection Procedure

Sample/BPW suspensions prepared as directed in Sample preparation for analysis section (above) are the starting point for this step in the protocol. From this point on, sample suspensions of various types (e.g., whole bird rinse sample vs. raw ground product) can be treated in the same manner.

Note: If using a screening test, follow manufacturer's instruction for enrichment procedures. If an alternate enrichment scheme is to be used, verification of the effectiveness of this alternate enrichment protocol with the screening test should be received from the manufacturer of the screening test or by in-laboratory testing.

1. Incubate sample/BPW suspension at 36 ± 1°C for 20–24 hours.

2. a. Transfer 0.5 ml of the BPW sample pre-enrichment culture into 10 ml TT broth.

b. Transfer 0.1 ml of the BPW sample pre-enrichment culture into 10 ml RV broth.

3. a. Incubate the TT enrichment culture at 42 ± 0.5°C for 22–24 hours.

b. Incubate the RV enrichment culture at 42 ± 0.5°C for 22–24 hours.

4. Streak each enrichment culture onto both DMLIA and BGS agar plates. Do not subdivide plates for streaking multiple samples; streak the entire agar plate with a single sample enrichment.

5. Incubate plates at 36 ± 1°C.

6. Examine plates after 22–24 hours of incubation. Reincubate negative plates and reexamine them the following day.

7. Select and confirm suspect colonies as described in the sections for Isolation procedure through Biochemical testing procedures (below).

Isolation Procedure

1. Pick typical well-isolated colonies.

a. BGS. Select colonies that are pink and opaque with a smooth appearance and an entire edge surrounded by a red color in the medium. On very crowded plates, look for colonies that appear tan against a green background.

b. DMLIA. Select purple colonies with or without black centers. Since salmonellae typically decarboxylate lysine and ferment neither lactose nor sucrose, the color of the medium reverts to purple.

2. Select three suspect colonies from each plate. Pick only from the surface and center of the colony. Avoid touching the agar because these selective media may suppress growth of organisms which are viable but not visible; such ''sleeper'' organisms can be picked up from the agar surface and carried forward onto media used for confirmation tests. If a plate is crowded and there are no well-isolated colonies available, restreak from this plate *directly* onto fresh selective agar plates.

Initial Isolate Screening Procedure

1. Inoculate TSI and LIA slants consecutively with a single pick from a colony by stabbing the butts and streaking the slants in one operation. If screw-cap tubes are used, the caps must be loosened before incubation. Incubate at 36 ± 1°C for 24±2 hours.

2. Examine TSI and LIA slants as sets. Note the colors of butts and slants, blackening of the media and presence of gas as indicated by gas pockets or cracking of the agar. Note also the appearance of the growth on the slants along the line of streak. Discard sets that show ''swarming'' from the original site of inoculation. Discard sets that show a reddish slant in LIA. Isolates giving typical *Salmonella* spp. reactions should be confirmed by serological tests. Examine isolates which are suggestive, but not typical of *Salmonella* spp. by a combination of biochemical and serological procedures. Confirm by biochemical tests ONLY those isolates that appear typical of *salmonellae,* but do not react serologically. Refer to the following chart for assistance in making these determinations.

Triple sugar iron agar			Lysine iron agar		Polyvalent sera		Disposition
Butt	Slant	H_2S	Butt	H_2S	O	H	
Y	R	+	P	+	+	+	Salmonella spp.
Y	R	+	P	+	+	-	B. & M. T.
Y	R	-	P	-	.....	.....	B. & M. T.
Y	R	-	Y	-	+	+	B. & M. T.[1]
Y	R	-	Y	-	-	.....	Discard.
Y	R	+	Y	±	.....	.....	Discard.
Y	Y	-	Y/P	-	.....	.....	Discard.

Triple sugar iron agar			Lysine iron agar		Polyvalent sera		Disposition
Butt	Slant	H_2S	Butt	H_2S	O	H	
Y	Y	+	P	+	.....	.....	B. & M. T.[2]
NC	NC	.....	.....	.....	.....	.....	Discard.

Y = Yellow; R = Red; P = Purple; B. & M. T. = Biochemical and motility tests; NC = No change in color from uninoculated medium.
[1] *Salmonella choleraesuis* (rarely found in swine in U.S.).
[2] *Salmonella arizonae.*

Serological Tests

All isolates giving TSI and LIA reactions which could be considered suggestive of *Salmonella* should be tested serologically. If the TSI and LIA reactions, together with the serological reactions, are indicative of *Salmonella*, confirmation may cease at this point. If, however, atypical TSI or LIA results and/or negative serological tests are encountered, biochemical testing is mandatory (see Biochemical testing procedure, below).

1. O Agglutination Tests

At a minimum, isolates should be tested with polyvalent O antiserum reactive with serogroups A through I. Following a positive reaction with polyvalent O antiserum, it is necessary to type the isolate using individual *Salmonella* antisera for O groups A through I. Testing for O groups A through I should encompass the majority of the *Salmonella* serotypes commonly recovered from meat and poultry products. Occasionally, however, an isolate which is typical of *Salmonella* (biochemically and Poly H serologically) but non-reactive with antisera to groups A through I will be recovered; such an isolate should be reported as ''*Salmonella* non A–I'' or ''*Salmonella* O group beyond I''.

Follow the manufacturer's instructions enclosed with the antisera. Use growth from either the TSI or LIA slant. Test the isolate first using polyvalent O antiserum. Do not read agglutination tests with a hand lens. If there is agglutination with the saline control alone (autoagglutination), identify such an isolate by biochemical reactions. If the saline control does not agglutinate and the polyvalent serum does, identify the individual O group using the individual Salmonella O grouping antisera for groups A through I. Record positive results and proceed to H agglutination tests.

2. H Agglutination Tests

Inoculate Trypticase soy broth or Tryptose broth. Incubate at 36 ± 1 °C overnight or until growth has an approximate density of three on McFarland's scale. Add an equal amount of saline containing 0.6% formalin and let set one hour. Remove one ml to each of two 13 × 100 mm test tubes. To one of the tubes, add *Salmonella* polyvalent H serum in an amount indicated by the serum titer or according to the manufacturer's instructions. The other tube serves as an autoagglutination control. Incubate both tubes at 48–50 °C in a water bath for up to one hour. Record presence or absence of agglutination. Alternatively, any other poly H agglutination test may be used as long as it gives results equivalent to the conventional tube agglutination procedure described above.

Biochemical Testing Procedures

Biochemical confirmation is only necessary with those isolates giving atypical TSI or LIA results and/or negative serological tests. Do the minimum number of tests needed to establish that an isolate can be discarded or that it is a member of the genus *Salmonella*. Exhaustive testing of any isolate from a sample that has already yielded a typical, easily identifiable *Salmonella* is unnecessary.

If further testing is necessary, inoculate the following media first: Tryptone broth, MR–VP medium, Simmons citrate agar, Christensen's urea agar, motility test medium, phenol red tartrate agar, and glucose, lactose, sucrose, salicin and dulcitol fermentation broths. Incubate at 36 ± 1 °C and record reactions the following day. Test Tryptone broth with Kovac's reagent for indole production in 24 hours and, if negative, again in 48 hours. Do not perform the MR–VP test until 48 hours have elapsed. If results are ambiguous, repeat MR test after five days of incubation. Hold negative carbohydrate fermentation tests for 14 days.

Refer to ''Edwards and Ewing's Identification of Enterobacteriaceae'', 4th Edition (3), for biochemical reactions of Enterobacteriaceae and for fermentation media and test procedures.

Discard all isolates that give positive urea or VP reactions. Discard any isolate that has the following combination of characteristics: produces gas in glucose, produces indole but not H_2S, is MR positive, VP negative and citrate negative; such organisms are E. coli regardless of ability to ferment lactose in 48 hours.

Inoculate additional biochemical tests as necessary to eliminate other Enterobacteriaceae. Refer to Edwards and Ewing for details. Eliminate Providencia spp. by a positive phenylalanine reaction. Eliminate Hafnia alvei on the basis of the following biochemical pattern: indole negative; MR negative, and VP and citrate positive based on four days of incubation at 25 °C; fermentation of arabinose and rhamnose; failure to ferment adonitol, inositol, sorbitol, and raffinose.

Alternatively, any other biochemical test system may be used as long as it gives results equivalent to the conventional tests.

Quality Control Procedures

It is recommended that a minimum of three method controls be analyzed whenever meat or poultry products are being examined for the presence of salmonellae. These controls should include a S. typhimurium (H_2S positive), S. senftenberg (H_2S negative), and an uninoculated media control. The inoculum level for the positive controls should approximate 30–300 CFU per container of enrichment medium. Inoculate positive controls at the end of each day's run. Incubate the three controls along with the samples, and analyze them in the same manner as the samples. Confirm at least one isolate recovered from each positive control sample.

Storage of Isolates

Do not store isolates on TSI agar because this tends to cause roughness of O antigens. For short-term (2–3 months) storage, inoculate a nutrient agar slant, incubate at 36 ± 1 °C overnight, and then store at 4–8 °C.

For long-term storage of isolates, subculture Salmonella isolates by stabbing nutrient agar (0.75% agar). Incubate at 36 ± 1 °C overnight, and then seal with hot paraffin-soaked corks. Household wax is better than embedding paraffin because it stays relatively soft at room temperature making the corks easy to remove. Store isolates *in the dark at room*

temperature. Such isolates will remain viable for several years.

Store ''working'' Salmonella stock cultures on nutrient agar slants. Transfer stocks monthly, incubate overnight at 36 ± 1 °C, and then store them at 4–8 °C.

References

1. AOAC International. 1995. Official Methods of Analysis of AOAC International. P.A. Cunniff, ed. 16th Edition. Gaithersburg, MD.

2. Bailey, J. S., J. Y. Chiu, N.A. Cox, and R.W. Johnston. 1988. Improved selective procedure for detection of salmonellae from poultry and sausage products. J. Food Protect. 51(5):391–396.

3. Ewing, W. H. 1986. ''Edwards and Ewing's Identification of Enterobacteriaceae'', 4th Edition. Elsevier Science Publishing Co., Inc., New York, NY.

4. Vassiliadis, P. 1983. The Rappaport-Vassiliadis (RV) enrichment medium for the isolation of salmonellas: An overview. J. Appl. Bacteriol. 54:69–76.

BILLING CODE 3410–DM–P

Figure 1. Example of sampling template (not drawn to scale)

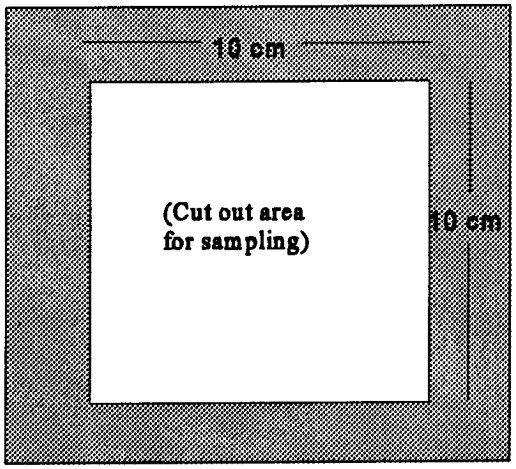

Figure 2. Sampling locations for *Salmonella* testing of cattle carcasses

Rump Locate the posterior aspect of the aitch bone. Draw an imaginary line toward the achilles tendon. At the point where the line intersects the cut surface of the round is the starting point for the rump sample. Measure 10 cm up the line leading to the achilles tendon, then 10 cm over (laterally), then 10 cm back to the cut surface of the round, then 10 cm along the cut surface to form the 10 cm by 10 cm square area.

Note: This upper illustration has been purposely altered somewhat. A true lateral view of the carcass would not show the aitch bone. From a medial view, the whole 10 cm x 10 cm sampling area could not be seen. Therefore, a lateral view with a portion of the round removed so the location of the aitch bone is shown is illustrated.

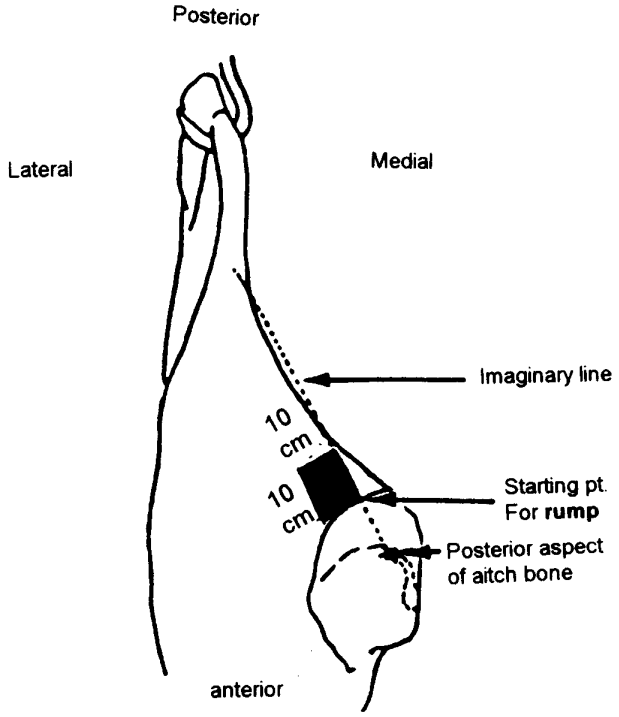

Flank Locate the cutaneous flank muscle (external abdominal oblique) and follow the medial border of the muscle anteriorly until it comes with approximately 3" of the midline. This will be the starting point. Measure up (posteriorly) 10 cm (approximately 4 inches) along a line approximately 3" from the midline (measure up or parallel to the midline), then over (laterally) 10 cm (approximately 4 inches) to form a 10 cm wide by 10 cm long square sample.

Brisket Locate the elbow of the carcass. Draw an imaginary line straight across (medially) to the midline cut. This will be the starting point. Measure up along the midline 10 cm (approximately 4 inches), then over 10 cm (approximately 4 inches) to form a 10 cm wide by 10 cm long square sample.

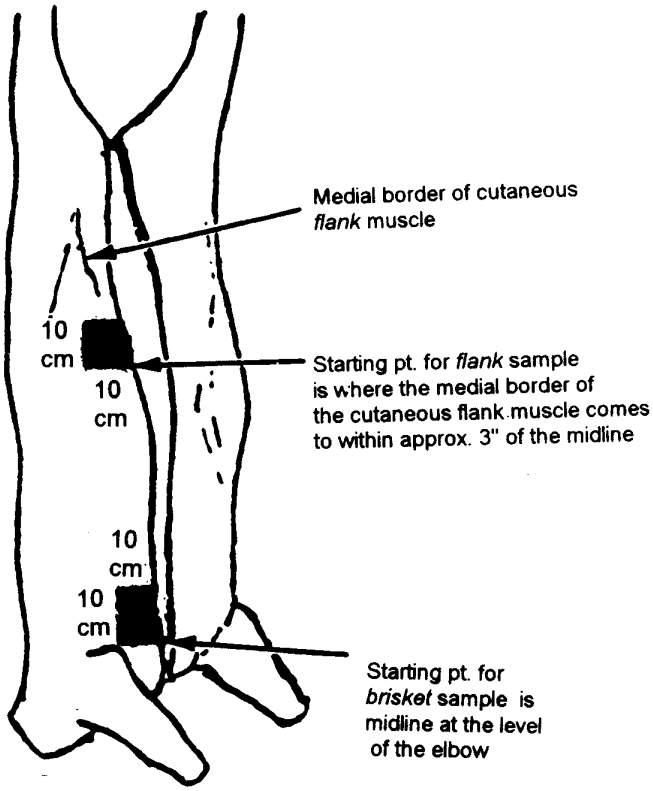

Figure 3. Sampling locations for *Salmonella* testing of swine carcasses

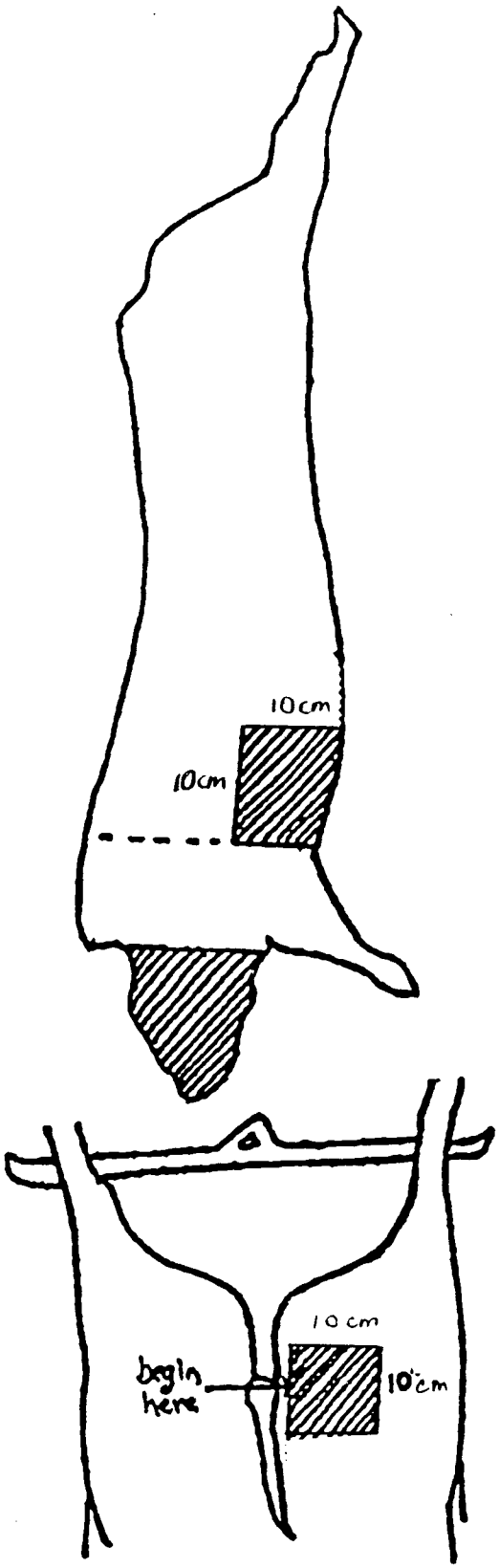

belly Locate the elbow of the carcass. Draw an imaginary line straight across (medially) to the midline cut. This will be the starting point. Measure up along the midline 10 cm (approximately 4 inches), then over 10 cm (approximately 4 inches) to complete the 10 cm long by 10 cm wide square sample area to swab for swine "belly" sample.

jowls Draw an imaginary line from the atlas/axis joint to the ventral midline; all skin below that point will be considered the jowl.

ham From the dorsal position, locate the lateral surface of the base of the tail, and measure up (caudal) 5 cm along the lateral edge of the exposed fat margin, then 10 cm laterally. Now measure 10 cm down (cranial), then 10 cm medially, then 5 cm up (posteriorly) to complete a 10 cm long by 10 cm wide square sampling area.

BILLING CODE 3410–DM–C

Appendix F—Guidelines for Escherichia coli Testing for Process Control Verification in Cattle and Swine Slaughter Establishments

Introduction

Under the Pathogen Reduction/HACCP Regulation, all slaughter establishments will be required to test carcasses for generic *E. coli* as a tool to verify process control. This document outlines the sampling and microbial testing that should be followed to meet this requirement. It also gives guidance to interpreting your results. This document is a supplement to the Regulation, but not a substitute for it. Further in-depth details of the program may be found in the Regulation. Please provide these guidelines to your company microbiologist or testing laboratory in order to help you meet the regulatory requirements for generic *E. coli* testing.

Guidelines for Sample Collectors/Microbiologists

Background

This sampling protocol has been prepared to support the Pathogen Reduction/HACCP Regulation. This protocol incorporates the use of a nondestructive sampling technique for sample collection from raw beef and swine carcasses. These techniques have been evaluated by the Agricultural Research Service and have been designed to give comparable results to the FSIS Nationwide Microbiological Baseline Data Collection Programs' excised tissue samples. We are continuing to improve the sponging techniques and welcome comments. This technique will also be used in the FSIS *Salmonella* testing programs and will be closely monitored during the first year of prevalence phase testing.

Carcasses within the same establishment and in different establishments must be sampled and analyzed in the same manner if the results are to provide a useful measure of process control across the nation. It is imperative that all like establishments adhere to the same sampling and analysis requirements detailed here, without deviation. These sampling and analytical procedures may be directly written into your establishment's individual HACCP plan.

Cattle and swine carcasses must be sampled at the end of the slaughter process in the cooler. These sample collection locations are the same as those in the FSIS baseline studies, making samples taken here comparable to the nationwide baseline performance criteria.

Pre-sampling Preparation

Sample collection will be carried out by the individual designated in the establishment's written protocol for microbiological sampling. This protocol should include a check list of tasks to be performed prior to sample collection, materials needed for sample collection, random selection procedures, where the samples will be analyzed (on-site versus off-site), and other information that will aid the sample collector. As stated previously, this guideline can be a part of the plant's sample collection guidelines, but plant specific details and procedures will need to be included. Sampling supplies, such as sterile gloves, sterile sampling solutions, hand soap, sanitizing solution, etc., as well as specific materials needed for sampling different carcass types (i.e., specimen sponges in bags and template for sampling cattle or swine carcasses), will need to be assembled prior to beginning sample collection.

For cattle and swine carcass sampling, a template will be needed to mark off the area to sample. The template can be made of metal or aluminum foil, brown paper, flexible plastic, etc. Some disposable templates may come sterilized and individually prepackaged. To make a reusable template, cut out a 10 centimeters (cm) x 10 cm (3.94 inches x 3.94 inches) square from a sheet larger than the area to be sampled. (See Figure 1). If a reusable template is used, it will need to be sanitized with an approved sanitizing solution [e.g., hypochlorite (bleach) solution or alcohol]. However, the template needs to be dry before placing it on the carcass. Aluminum foil or paper templates can be used once and discarded. The foil for the template should be stored in a manner to prevent contamination. Since the area enclosed by the template will be sampled, take care not to touch this area with anything other than the sampling sponge. Using dirty or contaminated material may lead to erroneous results. If an autoclave is available, paper or aluminum foil templates can be wrapped in autoclavable paper and sterilized.

Sterile sampling solutions, Butterfield's phosphate diluent (BPD), can be stored at room temperature. However, at least on the day prior to sample collection, check solutions for cloudiness. DO NOT use solutions that are cloudy, turbid or contain particulate matter. Place the number of containers of sampling solution (BPD) that will be needed for the next day's sampling in the refrigerator.

To obtain the most accurate results, samples should be analyzed as soon after collection as possible. However, if samples must be transported to an off-site laboratory, the samples need to be maintained at refrigeration temperatures until transport, then shipped refrigerated via an overnight delivery service to the laboratory performing the analysis. Samples analyzed off-site must be picked up by the overnight courier the SAME calendar day the sample is collected. The sample must arrive at the laboratory the day after the sample is collected. Samples shipped to an outside laboratory must be analyzed no later than the day after collection. The following section gives information on shipping containers and transporting samples to off-site facilities.

Shipping Containers and Coolant Packs

It is important that samples fit easily into the shipping containers so that the sample bags do not break. Correct use of the refrigerant gel-ice packs and proper packing of the shipping container are necessary so that samples arrive at the laboratory at an acceptable temperature. Frozen samples or samples which are too warm are not considered valid and must not be analyzed. Some bacteria may be damaged by temperatures that are too cold, while temperatures that are too warm can allow bacteria to reproduce. Maintaining samples at improper temperatures may cause inaccurate sample results. The sample should be kept refrigerated, NOT FROZEN, in the shipping container prior to pickup by the courier service. The shipping container, itself, should not be used as a refrigerator. However, multiple samples (if needed) for that day may be stored in the open shipping container in the cooler or refrigerator.

Sampling frequency

Sampling frequency for *E. coli* testing is determined by production volume. The required minimum testing frequencies for all but very low production volume establishments are shown in Table 1 by slaughter species.

TABLE 1.—E. COLI TESTING FREQUENCIES [a]

Cattle	1 test per 300 carcasses.
Swine	1 test per 1,000 carcasses.

[a] Note: These testing frequencies do not apply to very low volume establishments. See Table 2.

Very Low Volume Establishments

Some establishments may be classified as very low volume establishments. The maximum yearly

slaughter volumes for very low volume establishments are described in Table 2.

TABLE 2.—MAXIMUM YEARLY LIVESTOCK SLAUGHTER VOLUMES FOR VERY LOW VOLUME ESTABLISHMENTS

Slaughter species	Criteria (yearly slaughter volume)
Cattle	Not more than 6,000 head.
Swine	Not more than 20,000 head.
Cattle and Swine.	Not more than 20,000 total, with not more than 6,000 cattle.

Establishments with very low volumes are to sample the predominant species at an initial rate of once per week until at least 13 test results have been obtained. Once the initial criteria have been met for very low volume establishments (see APPLYING PERFORMANCE CRITERIA TO TEST RESULTS), the establishment will repeat the same sampling regime once per year, in the 3 month period of June through August, or whenever a change is made in the slaughter process or personnel.

Random Selection of Carcasses

Samples are to be taken randomly at the required frequency (See section on Sampling Frequency). For example, given the frequency of testing for cattle is 1 (one) test per every 300 cattle slaughtered, then if a plant slaughters 150 head of cattle an hour, 1 (one) sample will be taken every 2 hours.

Different methods of selecting the specific carcass for sampling could be used, but all require the use of random numbers. Methods could include: using random number tables, using calculator- or computer-generated random numbers, drawing cards, etc. When selecting the random numbers, use the method(s) currently in use at the establishment for other sampling programs, if other programs are currently underway.

The carcass for sampling must be selected at random from all eligible carcasses. If multiple lines exist, randomly select the line for sample collection for that interval. Repeat the random selection process for the next sampling interval. Each line should have an equal chance of being selected at each sampling interval.

Cattle Carcass Selection

The half-carcasses eligible for sampling should be selected from those in the cooler 12 or more hours after slaughter. Both the ''leading'' and ''trailing'' sides of a carcass should have an equal chance of being selected within the designated time frame (based on the sampling frequency for the plant). NOTE: If more than one shift is operating at the plant, the sample can be taken on any shift, provided the following requirements are met:

Selection of TIME: Select the time, based on the appropriate sampling frequency, for collecting the sample.

Selection of COOLER SITE: Select a safe and accessible site in the cooler for random selection of the half-carcass. This site may be located at the transfer chain, grading chain, or a rail that contains carcasses that have been chilled 12 hours or more. If there are multiple sites of the same kind, select one at random.

Selection of HALF-CARCASS: Based on the sampling frequency for the plant, identify a half-carcass (selected by your random number method) from the predetermined point along the chain (cooler site) and then count back five (5) half-carcasses and select the next half-carcass (carcass) for sampling. The reason for counting back five half-carcasses is to avoid any possible bias during selection. (See Sampling Frequency section to determine the rate of sampling.)

Swine Carcass Selection

The carcasses eligible for sampling should be selected from those in the cooler 12 or more hours after slaughter. Every carcass should have an equal chance of being selected within the designated time frame (based on the sampling frequency for the plant). NOTE: If more than one shift is operating at the plant, the sample can be taken on any shift, provided the following requirements are met:

Selection of TIME: Select the time, based on the appropriate sampling frequency, for collecting the sample.

Selection of COOLER SITE: Select a safe and accessible site in the cooler for random selection of the carcass. This site may be located at the transfer chain, grading chain, or a rail that contains carcasses that have been chilled 12 hours or more. If there are multiple sites of the same kind, select one at random.

Selection of CARCASS: Based on the sampling frequency for the plant, identify a whole carcass from the predetermined point along the chain and then count back five (5) carcasses and select the next carcass for sampling. The reason for counting back five carcasses is to avoid any possible bias during selection. (See Sampling Frequency section to determine the rate of sampling.)

Aseptic Techniques/Sampling

Extraneous organisms from the environment, hands, clothing, sample containers, sampling devices, etc., may lead to erroneous analytical results. More stringent requirements for microbiological analysis are necessary, therefore, use of aseptic sampling techniques and clean, sanitized equipment and supplies are of utmost importance.

There should be an area designated for preparing sampling supplies, etc. A stainless steel, wheeled cart or table would be useful during sampling. A small tote or caddy could be moved to the location of sampling and could be used for carrying supplies, supporting sample bags when adding sterile solutions to sample bags, etc.

Sterile gloves should be used for collecting samples. The only items which may contact the external surface of the glove are the exposed sample being collected and/or the sterile sample utensil (specimen sponge). Keep in mind that the outside surfaces of the sample container are not sterile. Do not handle the inside surface of the sterile sample containers. Do not touch anything else. The following procedure for putting on sterile gloves can be followed when collecting samples:

(a) Peel open the package of sterile gloves from the top without contaminating (touching, breathing on, contacting, etc.) the exterior of the gloves.

(b) Remove a glove by holding it from the wrist-side opening inner surface. Avoid any contact with the outer surface of the glove. Insert the washed and sanitized hand into the glove, taking care not to puncture the glove.

(c) Taking care not to contaminate the exterior surface of the glove, repeat the above step for the hand you will use to physically handle the sample.

(d) If at any time you are concerned that a glove may be

Preparation for Sample Collection

Prior to collecting samples, review appropriate sampling steps, random selection procedures, and other information that will aid in sample collection.

On the day prior to sample collection, after checking for cloudiness/turbidity, place the number of BPD containers that will be needed for the next day's sampling in the refrigerator/cooler. If samples are to be shipped to an off-site facility, pre-chill shipping container and refrigerator packs.

On the day of sampling, gather all sample collection bags, sterile gloves, sanitizer, hand soap, sterile solutions for

sampling, and specific materials listed under the Materials section of the sample collection section for the type of carcass to be sampled. Ensure that all sampling supplies are on hand and readily available before beginning sample collection.

Label the sample bags before starting the sampling procedure. Use permanent ink. If you are using paper labels, it is important that the label be applied to the bag at normal room temperature; it will not stick if applied in the cooler.

Outer clothing (frocks, gloves, head gear, etc.) worn in other areas of the plant should be removed before entering the sampling area or preparing to collect samples. Replace outer clothing removed earlier with clean garments (i.e., laboratory coat) that have not been directly exposed to areas of the plant outside of the sampling area.

Sanitize the sample work area surfaces by wiping with a clean disposable cloth or paper towel dipped in a freshly prepared 500 ppm (parts per million) sodium hypochlorite solution (0.05% sodium hypochlorite) or other approved sanitizer which provides an equivalent available chlorine concentration. The sample work area surfaces must be free of standing liquid before sample supplies and/or product containers are placed on them.

Before sampling, thoroughly wash and scrub hands to the mid-forearm. Use antibacterial hand soap. If available, this should include a sanitizer at 50 ppm equivalence available chlorine. Dry the hands using disposable paper towels.

Specific Sample Collection Procedures

Cattle Sample Collection Procedure

Materials

1. Sterile specimen sponge in sterile Whirl-pack®-type bag or equivalent
2. 25 ml sterile Butterfield's phosphate diluent (BPD)
3. Sterile ziplock-type or stomacher bag
4. Template for 100 cm^2 sampling area
5. Sterile gloves
6. Wheeled ladder, sampling platform, or step ladder
7. Sanitizing solution
8. Small tote or caddy for carrying supplies

Collection

Read the sections under Pre-sampling Preparation and Preparation for Sample Collection before beginning the sampling procedure. Use predetermined random selection procedures for selecting the half-carcass to be sampled. Remember, samples will be collected from half-carcasses in the cooler 12 hours or more after slaughter.

A sampling sponge (which usually comes dehydrated and prepackaged in a sterile bag) will be used to sample all three sites on the carcass (flank, brisket, and rump—see Figure 2). It is important to swab the areas in the order of least to most contamination in order to avoid spreading any contamination.

Therefore, swab the areas in the sequence indicated in this sampling protocol. Nondestructive surface sampling will be conducted as follows:

1. Ensure that all bags have been pre-labeled and all supplies are on hand, including the sampling template. (An assistant may be helpful during the sampling process.)
2. IF a reusable template is used, immerse the sampling template in an approved sanitizing solution for at least 1–2 minutes. Just prior to swabbing the first sample site on the carcass (step 13), retrieve the sampling template from the sanitizing solution. Shake excess solution from the utensil, then protect the portion of the template that will contact the carcass from contamination.
3. Locate the flank, brisket, and rump sampling sites using illustrations and directions in Figure 2 (cattle carcass sampling locations).
4. Position the wheeled ladder, sampling platform, or step ladder near the carcass so the rump sample area (Figure 2) is within easy reach from the ladder.
5. While holding the sponge bag at the top corner by the wire closure, tear off the clear, perforated strip at the top of the bag.
6. Remove the cap from sterile BPD bottle, being careful not to touch the bottle opening.
7. Carefully pour about half the contents of the sterile BPD bottle (approximately 10 ml) into the sponge bag to moisten the sponge.
8. Close the top of the bag by pressing the wire closures together. Use hand pressure from the outside of the bag and carefully massage the sponge until it is FULLY HYDRATED (moistened).
9. With the bag still closed, carefully push the moistened sponge to the upper portion of the bag orienting one narrow end of the sponge up toward the opening of the bag. Do NOT open the bag or touch the sponge with your fingers. While holding the bag, gently squeeze any excess fluid from the sponge using hand pressure from the outside. The whole sponge should still be in the bag.
10. Open the bag containing the sponge, being careful not to touch the inner surface of the bag with your fingers. The wire closure at the top of the bag should keep the bag open. Set bag aside.
11. Put on a pair of sterile gloves.
12. Carefully remove the moistened sponge from the bag with the thumb and fingers (index and middle) of your sampling hand.
13. With the other hand, retrieve the template by the outer edge, taking care not to contaminate the inner edges of the sampling area of the template.
14. Locate the flank sampling area (Figure 2). Place the template over this location.
15. Hold the template in place with one gloved hand (Remember, only the sponge should touch the sampling area. Take care not to contaminate this area with your hands)
16. With the other hand, wipe the sponge over the enclosed sampling area (10 cm x 10 cm) for a total of approximately 10 times in the vertical and 10 times in the horizontal directions. The pressure for swabbing would be as if you were removing dried blood from the carcass. However, the pressure should not be too hard as to crumble or destroy the sponge. (Note: The template may need to be ''rolled'' from side to side during swabbing since the surface of the carcass is not flat. This ensures that the 100 cm^2 area is enclosed while swabbing.)
17. Repeat steps 14–16 for the brisket area, using the SAME side or surface of the sponge used to swab the flank area.
18. After swabbing the brisket area, transfer the template to the same hand holding the sponge. Do not contaminate the sponge or inner edges of the sampling area of the template.
19. Climb the ladder or platform, holding onto the handrail with the hand used to hold the template. Once at a convenient and safe height for sampling the rump, transfer template back to ''climbing'' hand (hand used to hold onto the rail while climbing the ladder), taking care not to contaminate the inner edges of the template.
20. Repeat steps 14–16 for the rump area, using the ''clean'' surface or side (the side that was NOT previously used to swab the flank/brisket areas) of the sponge.
21. After swabbing the rump area, carefully place the sponge back in the sponge sample bag, taking care not to touch the sponge to the outside of the sample bag.
22. While holding the handrail, climb down from the ladder.
23. Add the additional BPD (about 15 ml) to the sample bag to bring the total volume to approximately 25 ml.
24. Expel excess air from the bag containing the sponge and fold down the top edge of the bag 3 or 4 times to close. Secure the bag by folding the attached wire tie back against the bag.

Place closed sponge bag into second bag and close the second bag securely.

25. (a) If samples are to be analyzed at an ON-SITE LABORATORY, begin sample preparation (ANALYTICAL METHODS section)

(b) If samples are to be analyzed at an OUTSIDE (OFF-SITE) LABORATORY, follow procedure in the Sample Shipment section.

Swine surface sample collection procedure:

Materials

1. Sterile specimen sponge in sterile Whirl-Pak®-type bag or equivalent
2. 25 ml sterile Butterfield's phosphate diluent (BPD)
3. Sterile ziplock-type or stomacher-type bag
4. Template for a 100 cm^2 sampling area
5. Sterile gloves
6. Wheeled ladder, sampling platform, or step ladder
7. Sanitizing solution
8. Small tote or caddy for carrying supplies

Collection

Read the sections under Pre-sampling Preparation and Preparation for Sample Collection before beginning the sampling procedure. Use predetermined random selection procedures for selecting carcass to be sampled. Remember: samples will be collected from carcasses in the cooler 12 hours or more after slaughter. A sampling sponge (which usually comes dehydrated and prepackaged in a sterile bag) will be used to sample all three sites on the swine carcass (belly, ham, and jowl—see Figure 3). It is important to swab the areas in the order of least to most contamination in order to avoid spreading any contamination. Therefore, swab the areas in the sequence indicated in this sampling protocol. Nondestructive surface sampling will be conducted as follows:

1. Ensure that all supplies are on hand. (An assistant may be helpful during the sampling process.)

2. If a reusable template is used, immerse the sampling template in a sanitizing solution for at least 1–2 minutes. Just prior to swabbing the first sample site on the swine carcass (step 12), retrieve the sampling template from the sanitizing solution. Shake excess solution from the utensil, then protect the portion of the template that will contact the carcass from contamination.

3. Locate the belly, ham, and jowl sampling sites using illustrations and directions in Figure 3 (swine carcass sampling locations).

4. Position the wheeled ladder, sampling platform, or step ladder near the carcass so the ham sample area (Figure 3) is within easy reach from the ladder.

5. Hold the sponge bag at the top corner by the wire closure, then tear off the clear perforated strip at the top of the bag. Open the bag.

6. Remove the cap from sterile BPD bottle, being careful not to touch the bottle opening. Do not contaminate the lid.

7. Carefully pour about half of the contents of the sterile BPD bottle (10 ml) into the sponge bag to moisten the sponge. Put the lid back on the BPD bottle.

8. Close the top of the bag by pressing the wire closures together. Use hand pressure from the outside of the bag and carefully massage the sponge until it is FULLY HYDRATED (moistened).

9. With the bag still closed, carefully push the moistened sponge to the upper portion of the bag orienting one narrow end of the sponge up toward the opening of the bag. Do NOT open the bag or touch the sponge with your fingers. While holding the bag, gently squeeze any excess fluid from the sponge using hand pressure from outside. The whole sponge should still be inside the bag.

10. Open the bag containing the sponge, being careful not to touch the inner surface of the bag with your fingers. The wire closure at the top of the bag should keep the bag open.

11. Put on a pair of sterile gloves.

12. Carefully remove the moistened sponge from the bag with the thumb and fingers (index and middle) of your sampling hand.

13. With the other hand, retrieve the template by the outer edge, taking care not to contaminate the inner edges of the sampling area of the template.

14. Locate the belly sampling area (Figure 2). Place the template over this location.

15. Hold the template in place with one gloved hand. Remember, only the sponge should touch the sampling area. Take care not to contaminate this area with your hands.

16. With the other hand, wipe the sponge over the enclosed sampling area (10 cm × 10 cm) for a total of approximately 10 times in the vertical and 10 times in the horizontal directions. The pressure for swabbing would be as if you were removing dried blood from the carcass. However, the pressure should not be too hard as to crumble or destroy the sponge.

Note: The template may need to be ''rolled'' from side to side during swabbing since the surface of the carcass is not flat. This ensures that the 100 cm^2 area is enclosed while swabbing.

17. After swabbing the belly area, transfer the template to the same hand that is holding the sponge. Do not contaminate the sponge or the inner edges of the sampling area of the template.

18. Climb the ladder or platform, holding onto the handrail with the hand used to hold the sampling template in place. Once at a convenient and safe height for sampling the ham, transfer template back to the ''climbing'' hand (hand used to hold onto the rail while climbing the ladder), taking care not to contaminate the sponge or the inner edges of the template.

19. Repeat steps 14–16 for the ham sampling area, using the SAME surface of the sponge used to swab the belly area.

20. After swabbing the ham area, carefully place the template back to the same hand that is holding the sponge. Do not contaminate the sponge or the inner edges of the sampling area of the template.

21. While holding the handrail, climb down from the ladder.

22. Transfer the template back to the ''climbing'' hand (hand used to hold onto the rail while descending the ladder), taking care not to contaminate the sponge or the inner edges of the template.

23. Repeat steps 14–16 for the jowl area, using the ''clean'' surface or side (the side that was not previously used to swab the belly/ham areas).

24. After swabbing the jowl area, carefully place the sponge back into the sponge bag. Do not touch the surface of the sponge to the outside of the sponge bag.

25. Add the additional BPD (about 15 ml) to the bag to bring the total volume to approximately 25 ml.

26. Press wire closures of the sponge bag together, expel excess air, then fold down the top edge of the bag 3 or 4 times. Secure the bag by folding the attached wire tie back against the bag. Place the closed sponge bag into the second bag and close the second bag securely.

27. (a) If samples are to be analyzed at an ON-SITE LABORATORY, begin sample preparation (ANALYTICAL METHODS section).

(b) If samples are to be analyzed at an OUTSIDE (OFF-SITE) LABORATORY, follow procedure in the Sample Shipment section.

Sample Shipment

Samples analyzed on-site must be analyzed as soon after collection as possible. If no on-site facilities are available, the samples must be shipped the same calendar day as collected, to

an outside laboratory. The samples must be analyzed no later than the day after collection.

1. Prechill shipping container by placing the open shipping container in the refrigerator at least the day before sampling.

2. Place the appropriately-labeled, double-bagged sample(s) in the prechilled shipping container in an upright position to prevent spillage. Newspaper may be used for cushioning the sample and holding it in the upright position. If more than one sample is collected during the day, take steps to ensure that samples are maintained at refrigeration temperature. Refrigeration temperatures help limit multiplication of any microorganisms present which ensures the most accurate results.

3. Place a corrugated cardboard pad on top of samples. This corrugated cardboard pad prevents direct contact of frozen gel packs with the samples. Next place the frozen gel pack(s) on top of the corrugated pad. Use sufficient frozen coolant to keep the sample refrigerated during shipment to the designated laboratory. Insert foam plug and press it down to minimize shipper head space.

4. Ship samples (via overnight delivery or courier) to the assigned laboratory.

Analytical Methods

Samples must be analyzed using one of the *E. coli* (Biotype I) quantitation methods found in the Official Methods of Analysis of the Association of Official Analytical Chemists (AOAC), International, 16th edition, or by any method which is validated by a scientific body in collaborative trials against the three tube Most Probable Number (MPN) method and agreeing with the 95% upper and lower confidence limits of the appropriate MPN index.

Suggested Quantitation Schemes

If a generic one ml plating technique is used for *E. coli* quantitation for cattle or swine carcass sponging sample analysis, the plate count would be divided by 12 to equal the count per cm^2. To cover the marginal and unacceptable range for *E. coli* levels (described in later section), the undiluted sample extract, a 1:10, a 1:100, a 1:1,000 and a 1:10,000 dilution should be plated, preferably in duplicate. Higher or lower dilutions may need to be plated based on the specific product.

If a hydrophobic grid membrane filtration method were used, the only difference would be filtration of one ml of the undiluted sample extract, 1:10, 1:100, 1:1,000 and 1:10,000 dilutions.

Additional dilutions of the original extract may need to be used if a three tube MPN protocol is used. The three highest dilutions that were positive for *E. coli* are used to calculate the MPN. MPN values from the appropriate MPN Table represent the count per ml of original extract and therefore must be divided by 12 to obtain the count per cm^2 of carcass surface area.

Record Keeping

Each test result must by recorded in terms of colony forming units per square centimeter (cfu/cm^2). A process control table or chart can be used to record the results and facilitate evaluation. Results should be recorded in the order of sample collection and include information useful for determining appropriate corrective actions when problems occur. The information needed for each sample includes date and time of sample collection, and, if more than one slaughter line exists, the slaughter line from which the sample was collected. These records are to be maintained at the establishment for twelve months and must be made available to Inspection Program employees on request. Inspection personnel review results over time, to verify effective and consistent process control.

For *E. coli* testing to be the most useful for verifying process control, timeliness is important and the record should be updated with the receipt of each new result. Detailed records should also be kept of any corrective actions taken if process control deviations are detected through microbiological testing.

Applying Performance Criteria to Test Results

Categorizing Test Results

E. coli test levels have been separated into 3 categories for the purpose of process control verification: acceptable, marginal, and unacceptable. (In the Pathogen Reduction/HACCP Regulation, the upper limits for the acceptable and marginal ranges were denoted by m and M.) These categories are described by slaughter species in Table 3.

TABLE 3.—VALUES FOR MARGINAL AND UNACCEPTABLE RESULTS FOR E. COLI PERFORMANCE CRITERIA

Slaughter class	Acceptable range	Marginal range	Unacceptable range
Cattle	Negative*	Positive but not above 100 cfu/cm^2	Above 100 cfu/cm^2.
Swine	10 cfu/cm^2	Above 10 cfu/cm^2 but not above 10,000 cfu/cm^2.	Above 10,000 cfu/cm^2.

* It should be noted that negative here is defined by the sensitivity of the sampling and test method used in the Baseline survey (5 cfu/cm^2 carcass surface area).

To illustrate the use of Table 3, consider a steer/heifer slaughter establishment. E. *coli* test results for this establishment will be acceptable if negative, marginal if positive but not above 100 cfu/cm^2, and unacceptable if above 100 cfu/cm^2.

Verification Criteria

The verification criteria are applied to test results in the order that samples are collected. The criteria consist of limits on occurrences of marginal and unacceptable results.

As each new test result is obtained, the verification criteria are applied anew to evaluate the status of process control with respect to fecal contamination.

1. An unacceptable result should trigger immediate action to review process controls, discover the cause if possible, and prevent recurrence.

2. A total of more than three marginal or unacceptable results in the last 13 consecutive results also signals a need to review process controls.

This way of looking at the number of marginal and unacceptable results is described as a ''moving window'' approach in the regulation. With this approach, results are accumulated until 13 have been accrued. After this, only the most recent 13 results—those in the ''moving window''—are considered.

An example of a record of results for Steer/Heifer testing is shown (in table form) below for an establishment performing two tests per day.

Test #	Date	Time collected	Test result (cfu/cm^2)	Result unacceptable?	Result marginal?	Number marginal or unacceptable in last 13	Pass/fail?
1	10–07	08:50	10	No	Yes	1	Pass
2	.....	14:00	Negative	No	No	1	Pass
3	10–08	07:10	50	No	Yes	2	Pass
4	.....	13:00	Negative	No	No	2	Pass
5	10–09	10:00	Negative	No	No	2	Pass
6	.....	12:20	Negative	No	No	2	Pass
7	10–10	09:20	80	No	Yes	3	Pass
8	.....	13:30	Negative	No	No	3	Pass
9	10–11	10:50	Negative	No	No	3	Pass
10	.....	14:50	Negative	No	No	3	Pass
11	10–14	08:40	50	No	Yes	4	Fail
12	.....	12:00	Nonegative	No	No	4	Fail
13	10–15	09:30	Negative	No	No	4	Fail
14	.....	15:20	Negative	No	No	3	Pass
15	10–16	07:30	Negative	No	No	3	Pass
16	.....	11:40	Negative	No	No	2	Pass
17	10–17	10:20	120	Yes	No	3	Fail

The following observations can be made on this example:

1. As of 10–14 at 08:40, there are four marginal or unacceptable results in the last 11 results, which exceeds the limit of 3 in 13 consecutive tests.

2. The limit of 3 in 13 also is exceeded for the next two tests, but since no new marginal or unacceptable result has occurred, these failures should not be treated as evidence of a new problem. The log or documentation of corrective action taken for the first failure should be adequate to verify that the deviation or problem was addressed.

3. On 10–15 at 15:20 the number of marginal or unacceptable results in the last 13 tests goes down to 3 because the marginal result for 10–07 at 08:50 is dropped and replaced by an acceptable result as the 13-test window moves ahead 1 test.

4. The result for 10–17 at 10:20 exceeds 100 and is unacceptable.

Figure 4 shows the same results as the above example but the results are displayed in chart form. The numbers along the horizontal axis of the graph (x-axis), refers to the test number in the chart above. The information for each test result, such as the time and date the sample was collected could also be recorded on the chart.

BILLING CODE 3410–DM–P

Figure 1. Example of sampling template (not drawn to scale)

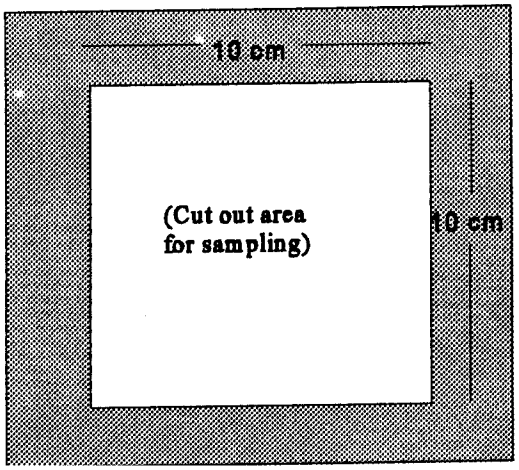

Figure 2. Sampling locations for *E. coli* testing of cattle carcasses

Rump Locate the posterior aspect of the aitch bone. Draw an imaginary line toward the achilles tendon. At the point where the line intersects the cut surface of the round is the starting point for the rump sample. Measure 10 cm up the line leading to the achilles tendon, then 10 cm over (laterally), then 10 cm back to the cut surface of the round, then 10 cm along the cut surface to form the 10 cm by 10 cm square area.

Note: The upper illustration has been purposely altered somewhat. A true lateral view of the carcass would not show the aitch bone. From a medial view, the whole 10 cm x 10 cm sampling area could not be seen. Therefore, a lateral view with a portion of the round removed so the location of the aitch bone is shown is illustrated.

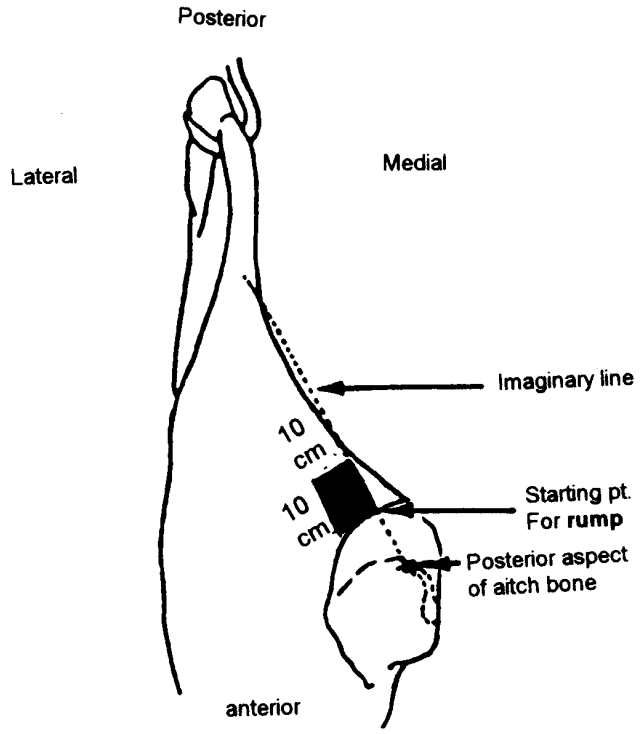

Flank Locate the cutaneous flank muscle (external abdominal oblique) and follow the medial border of the muscle anteriorly until it comes with approximately 3" of the midline. This will be the starting point. Measure up (posteriorly) 10 cm (approximately 4 inches) along a line approximately 3" from the midline (measure up or parallel to the midline), then over (laterally) 10 cm (approximately 4 inches) to form a 10 cm wide by 10 cm long square sample.

Brisket Locate the elbow of the carcass. Draw an imaginary line straight across (medially) to the midline cut. This will be the starting point. Measure up along the midline 10 cm (approximately 4 inches), then over 10 cm (approximately 4 inches) to form a 10 cm wide by 10 cm long square sample.

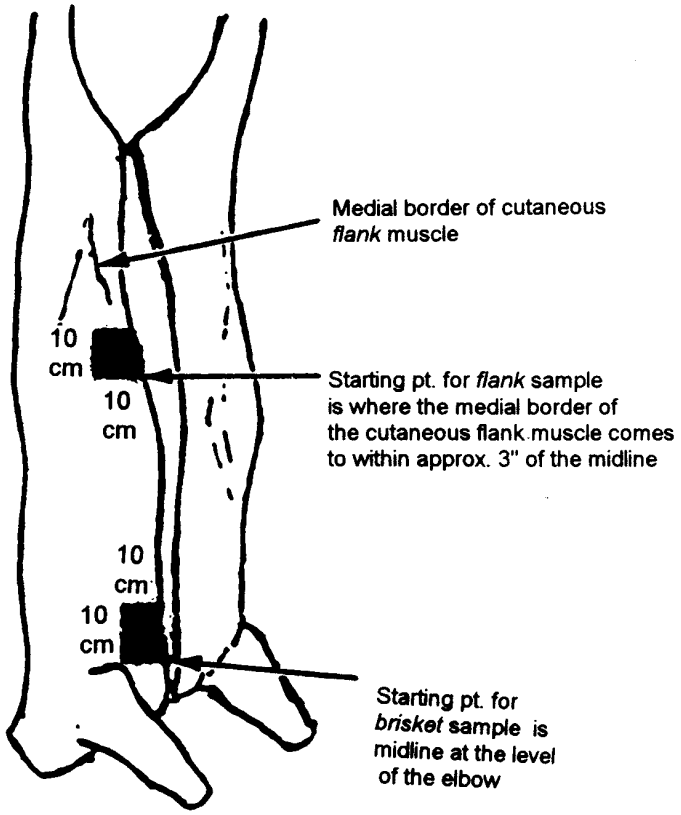

Figure 3. Sampling locations for *E. coli* testing of swine carcasses

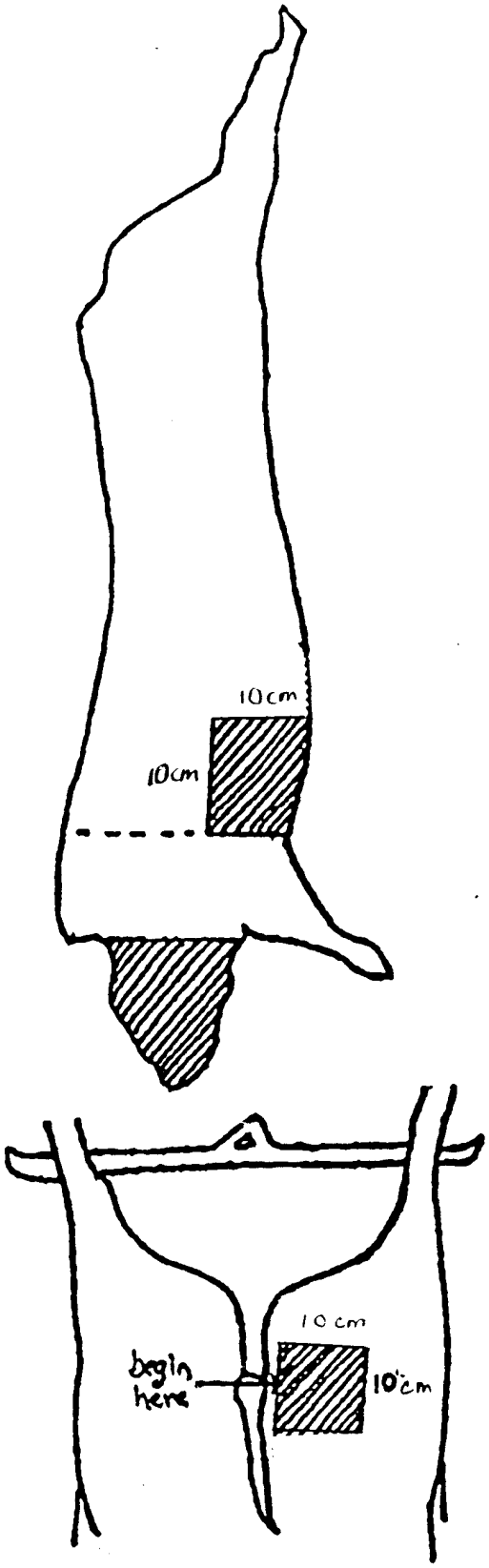

belly Locate the elbow of the carcass. Draw an imaginary line straight across (medially) to the midline cut. This will be the starting point. Measure up along the midline 10 cm (approximately 4 inches), then over 10 cm (approximately 4 inches) to complete the 10 cm long by 10 cm wide square sample. This square area will be the 100 cm^2 area to swab for the belly sample.

jowls Draw an imaginary line from the atlas/axis joint to the ventral midline; all skin below that point will be considered the jowl.

ham From the dorsal position, locate the lateral surface of the base of the tail, and measure up (caudal) 5 cm along the lateral edge of the exposed fat margin, then 10 cm laterally. Now measure 10 cm down (cranial), then 10 cm medially, then 5 cm up (posteriorly) to complete a 10 cm long by 6 cm wide rectangular sampling area.

Figure 4. Example of *E. coli* results using a control chart

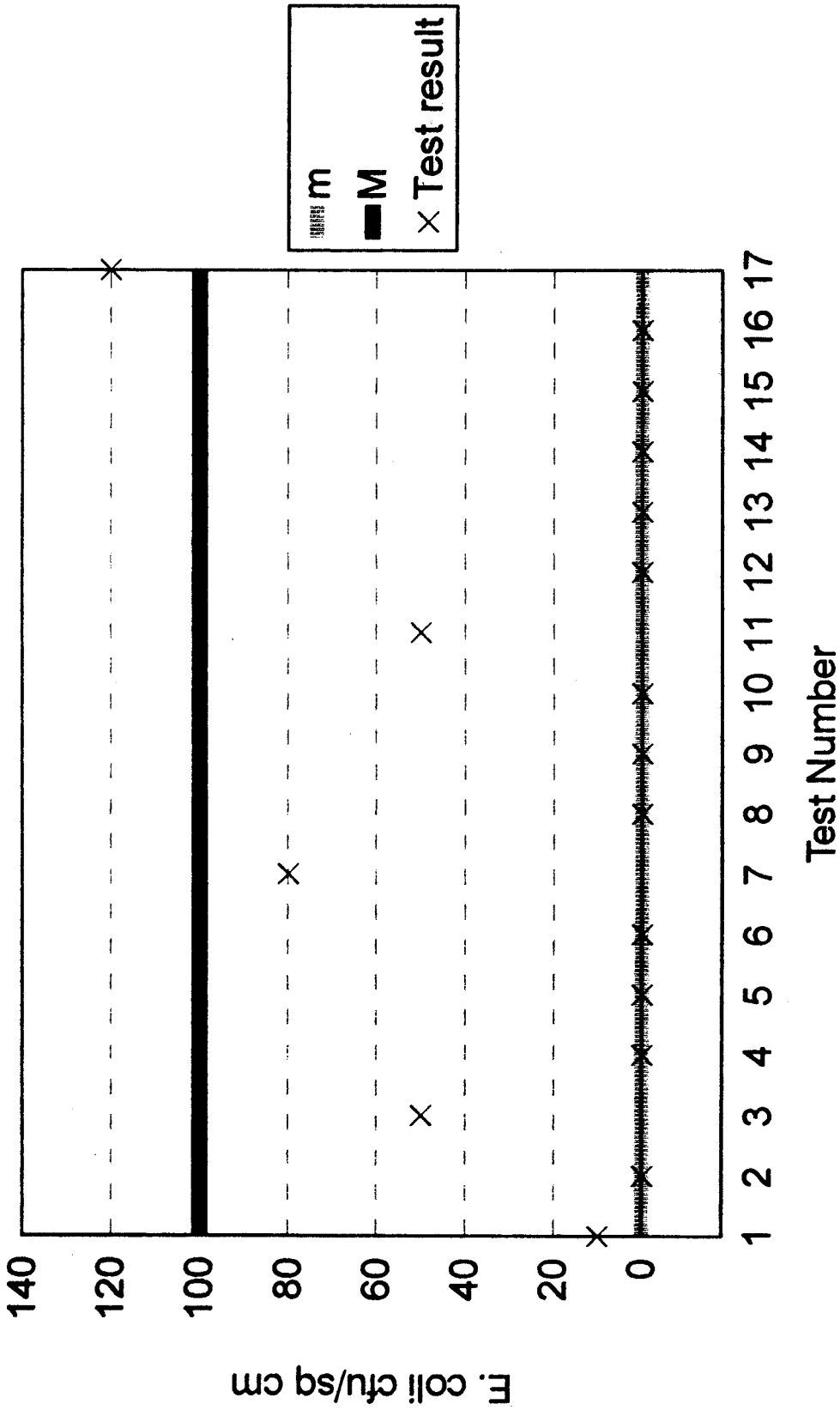

BILLING CODE 3410–DM–C

Appendix G—Guidelines for Escherichia coli Testing for Process Control Verification in Poultry Slaughter Establishments

Introduction

Under the Pathogen Reduction/HACCP Regulation, all poultry slaughter establishments will be required to test carcasses for generic *E. coli* as a tool to verify process control. This document outlines the sampling and microbial testing that should be followed to meet this requirement. It also gives guidance to interpreting your results. This document is a supplement to the Regulation, but not a substitute for it. Further in-depth details of the program may be found in the Regulation. Please provide these guidelines to your company microbiologist or testing laboratory in order to help you meet the regulatory requirements for generic *E. coli* testing.

Guidelines for Sample Collectors/Microbiologists

Background

This sampling protocol has been prepared to support the Pathogen Reduction/HACCP Regulation. Carcass sampling for broiler and turkey carcasses remain the nondestructive whole bird rinse which was used in the FSIS Nationwide Microbiological Baseline Data Collection Programs.

Carcasses within the same establishment and in different establishments must be sampled and analyzed in the same manner if the results are to provide a useful measure of process control across the nation. It is imperative that all like establishments adhere to the same sampling and analysis requirements detailed here, without deviation. These sampling and analytical procedures may be directly written into your establishment's individual HACCP plan.

Poultry carcasses must be sampled after the chill tank at the end of the drip line or last readily accessible point prior to packing/cut-up. This sample collection location is the same as that in the FSIS baseline studies, making samples taken here comparable to the nationwide baseline performance criteria.

Pre-sampling Preparation

Sample collection will be carried out by the individual designated in the establishment's written protocol for microbiological sampling. The protocol should include a check list of tasks to be performed prior to sample collection, materials needed for sample collection, random selection procedures, where the samples will be analyzed (on-site versus off-site), and other information that will aid the sample collector. As stated previously, this guideline can be a part of the plant's sample collection guidelines, but plant specific details and procedures will need to be included. Sampling supplies, such as sterile gloves, sterile sampling solutions, hand soap, sanitizing solution, etc., need to be assembled prior to beginning sample collection.

Sterile sampling solutions, Butterfield's phosphate diluent (BPD), can be stored at room temperature. However, at least on the day prior to sample collection, check solutions for cloudiness (DO NOT use solutions that are cloudy, turbid or contain particulate matter) and place the number of containers of sampling solution (BPD) that will be needed for the next day's sampling in the refrigerator.

To obtain the most accurate results, samples should be analyzed as soon after collection as possible. However, if samples must be transported to an off-site laboratory, the samples need to be maintained at refrigeration temperatures until transport, then shipped refrigerated via an overnight delivery service to the laboratory performing the analysis. Samples analyzed off-site must be picked up by the overnight courier the SAME calendar day the sample is collected. The sample must arrive at the laboratory no later than the day after the sample is collected. Samples shipped to an outside laboratory must be analyzed no later than the day after collection. The following section gives information on shipping containers and transporting samples to off-site facilities.

Shipping Containers and Coolant Packs

It is important that samples fit easily into the shipping containers so that the sample bags do not break.

Correct use of the refrigerant gel-ice packs and proper packing of the shipping container are necessary so that samples arrive at the laboratory at an acceptable temperature. Frozen samples or samples which are too warm are not considered valid and must not be analyzed. Some bacteria may be damaged by temperatures that are too cold, while temperatures that are too warm can allow bacteria to reproduce. Maintaining samples at improper temperatures may cause inaccurate sample results.

The sample should be kept refrigerated, NOT FROZEN, in the shipping container prior to pickup by the courier service. The shipping container, itself, should not be used as a refrigerator. However, multiple samples (if needed) for that day may be stored in the open shipping container in the cooler or refrigerator.

Sampling Frequency

Sampling frequency for *E. coli* testing is determined by production volume. The required minimum testing frequencies for all but very low production volume establishments are shown in Table 1 by slaughter species.

TABLE 1.—E. COLI TESTING FREQUENCIES [a]

Chickens	1 test per 22,000 carcasses.
Turkeys	1 test per 3,000 carcasses.

[a] **Note:** These testing frequencies do not apply to very low volume establishments. See Table 2.

Very Low Volume Establishments

Some establishments may be classified as very low volume establishments based on their annual production volume. The maximum yearly slaughter volumes for very low volume establishments are described in Table 2.

TABLE 2.—MAXIMUM YEARLY POULTRY SLAUGHTER VOLUMES FOR VERY LOW VOLUME ESTABLISHMENTS

Slaughter species	Criteria (yearly slaughter volume)
Chickens ...	Not more than 440,000 birds.
Turkeys	Not more than 60,000 birds.
Chickens and turkeys.	Not more than 440,000 total, with not more than 60,000 turkeys.

Establishments with very low volumes are to sample the predominant species once per week, initially, until at least 13 test results have been obtained.

Once the initial criteria have been met for very low volume establishments (see APPLYING PERFORMANCE CRITERIA TO TEST RESULTS), the establishment will repeat the same sampling regime once per year, in the 3 month period of June through August, or whenever a change is made in the slaughter process or personnel.

Random Selection of Carcasses

Samples are to be taken randomly at the required frequency (See section on Sampling Frequency). For example, given the frequency of testing for turkeys is 1 (one) test per every 3,000 turkeys slaughtered, then if a plant slaughters 1,500 turkeys an hour, 1 (one) sample will be taken every 2 hours.

Different methods of selecting the specific carcass for sampling could be used, but all require the use of random

numbers. Methods could include: using random number tables, using calculator- or computer-generated random numbers, drawing cards, etc. When selecting the random numbers, use the method(s) currently in use at the establishment for other sampling programs, if other programs are currently underway.

The carcass for sampling must be selected at random from all eligible carcasses. If multiple lines exist, randomly select the line for sample collection for that interval. Repeat the random selection process for the next sampling interval. Each line should have an equal chance of being selected at each sampling interval.

Poultry Carcass Selection

The poultry carcasses will be selected at random after chilling, at the end of the drip line or last readily accessible point prior to packing/cut-up. A WHOLE carcass is required, that is, one that has not been trimmed.

Note: If more than one shift is operating at the plant, the sample can be taken on any shift, provided the following requirements are met:

Selection of TIME: Select the time, based on the appropriate sampling frequency, for collecting the sample.

Selection of CHILLER: If more than one chiller system is in operation at the time of sample collection, the chill tank from which the sample is selected must be randomly selected.

Selection of POULTRY CARCASS: Based on the frequency of sampling for your establishment, identify a carcass (selected by your random number method) from the predetermined point, and then count back five (5) carcasses and select the next carcass for sampling. Exception: If the fifth carcass is not a WHOLE (untrimmed) bird, count back an additional five carcasses for sample selection. Each carcass must have an equal chance of being selected. The reason for counting back five carcasses is to avoid any possible bias during selection.

Aseptic Techniques/Sampling

Extraneous organisms from the environment, hands, clothing, sample containers, sampling devices, etc., may lead to erroneous analytical results. Stringent requirements for microbiological analysis are necessary, therefore, use of aseptic sampling techniques and clean sanitized equipment and supplies are of utmost importance.

There should be an area designated for preparing sampling supplies, etc. A stainless steel, wheeled cart or table would be useful during sampling. A small tote or caddy could be easily moved to the location of sampling and could be used for carrying supplies, supporting sample bags when adding sterile solutions to sample bags, etc.

Sterile gloves should be used for collecting samples. The only item which may contact the external surface of the glove is the exposed sample being collected. Keep in mind that the outside surfaces of the sample container are not sterile. Do not handle the inside surface of the sterile sample containers. Do not touch anything else. The following procedure for putting on sterile gloves can be followed when collecting samples:

(a) Peel open the package of sterile gloves from the top without contaminating (touching, breathing on, contacting, etc.) the exterior of the gloves.

(b) Remove a glove by holding it from the wrist-side opening inner surface. Avoid any contact with the outer surface of the glove. Insert the washed and sanitized hand into the glove, taking care not to puncture the glove.

(c) Next, taking care not to contaminate the outer surface of the glove, repeat the step above for the hand you will use to physically handle the sample.

(d) If at any time you are concerned that a glove may be contaminated, discard it and begin again with Step (a) above.

Preparation for Sample Collection

Prior to collecting samples, review appropriate sampling steps, random selection procedures, and other information that will aid in sample collection.

On the day prior to sample collection, after checking for cloudiness/turbidity, place the number of Butterfield's phosphate diluent (BPD) containers that will be needed for the next day's sampling in the refrigerator/cooler. If samples will be shipped to an off-site facility, pre-chill shipping container and refrigerator packs (follow manufacturer's directions for gel-packs).

On the day of sampling, gather all sample collection bags, sterile gloves, sanitizer, hand soap, sterile solutions for sampling (BPD), and specific materials listed under the *Materials* section of the sample collection section for the type of carcass to be sampled. Ensure that all sampling supplies are on hand and readily available before beginning sample collection.

Label the sample bags before starting the sampling procedure. Use permanent ink. If you are using paper labels, it is important that the label be applied to the bag at normal room temperature; it will not stick if applied in the cooler.

Outer clothing (frocks, gloves, head gear, etc.) worn in other areas of the plant should be removed before entering the sampling area or preparing to collect samples. Replace outer clothing removed earlier with clean garments (i.e., laboratory coat) that have not been directly exposed to areas of the plant outside of the sampling area.

Sanitize the sample work area surfaces by wiping with a clean disposable cloth or paper towel dipped in a freshly prepared 500 ppm sodium hypochlorite solution (0.05% sodium hypochlorite) or other approved sanitizer which provides an equivalent available chlorine concentration. The sample work area surfaces must be free of standing liquid before sample supplies and/or product containers are placed on them.

Before sampling, thoroughly wash and scrub hands to the mid-forearm. Use antibacterial hand soap. If available, this should include a sanitizer at 50 ppm equivalence available chlorine. Dry the hands using disposable paper towels.

Specific Sample Collection Procedures

Chicken Carcass Rinse Sampling Procedure

Materials

1. 2 Sterile 3500 milliliter (ml) stomacher-type or ziplock-type bags or equivalent. (The bag must be sterile and should be large enough to hold the carcass while rinsing.)
2. 400 ml sterile, Butterfield's phosphate diluent (BPD).
3. Plastic tie wraps or equivalent (if needed to secure the bag).
4. Sterile gloves.
5. Optional—(See alternate sampling—step 10)—Sterile leak-proof container.

Collection

Read the sections under Pre-sampling Preparation and Preparation for Sample Collection before beginning the sampling procedure. Use the predetermined random selection procedure to select the carcass to sample. The randomly selected bird will be collected after the chiller, at the end of the drip line as follows:

1. Ensure all sampling supplies are present and have been properly labeled. An assistant may be helpful during sampling.
2. Open a large stomacher-type bag without touching the sterile interior of the bag. (Rubbing the top edges of the bag between the thumb and forefinger will cause the opening to gap for easy opening.)
3. Put on sterile gloves.
4. With one hand, push up through the bottom of the sampling bag to form

a ''glove'' over one hand with which to grab the bird, while using your other hand to pull the bag back over the hand that will grab the bird. This should be done aseptically without touching the exposed interior of the bag.

5. Using the hand with the bag reversed over it, pick up the bird by the legs (hocks) through the stomacher bag. (The bag functions as a 'glove' for grabbing the bird's legs.) Take care not to contaminate the exposed interior of the bag. Allow any excess fluid to drain before reversing the bag back over the bird. (Alternately, have an assistant hold open the bag. Using your gloved hand, pick up the bird by the legs, allow any fluid to drain, and place the bird in the sampling bag.)

6. Rest the bottom of the bag on a flat surface. While still holding the top of the bag slightly open, add the sterile BPD (400 ml) to the bag containing the carcass, pouring the solution over the carcass.

(Alternately, with the aid of an assistant holding the bag open, add the sterile BPD (400 ml) to the bag containing the carcass, pouring the solution over the carcass.)

7. Expel most of the air from the bag, then close the top of the bag. While securely holding the bag, rinse the bird inside and out using a rocking motion for 30 shakes (approximately one minute). This is done by holding the bird through the bottom of the bag with one hand and the closed top of the bag with the other hand. Hold the bird securely and rock it in an arcing motion, alternating the weight of the bird from one hand to the other (motion like drawing an invisible rainbow or arch), assuring that all surfaces (interior and exterior of the carcass) are rinsed.

8. Rest the bag with the bird on a flat surface and, while still supporting the bird, open the bag.

9. With a gloved hand, remove the carcass from the bag. Since the carcass was rinsed with a sterile solution, it can be returned to the chill tank. Be sure not to touch the interior of the bag with your gloved hand.

10. Secure the top of the bag so that the rinse fluid will not spill out or become contaminated.

(Alternately, at least 30 milliliters of rinse fluid can be poured into a sterile leak-proof container to be sent to the lab for analysis.)

11. Place the sample bag (or leak-proof container) into another bag and secure the opening of the outer bag.

12. (a) If samples are to be analyzed at an ON-SITE LABORATORY, begin sample preparation for the selected method of analysis.

(b) If samples are to be analyzed at an OUTSIDE (OFF-SITE) LABORATORY, follow the procedure in the Sample Shipment section.

Turkey Carcass Rinse Sampling Procedure

Materials

1. 2 Sterile 3500 ml stomacher-type or ziplock-type bags or equivalent. (The bag must be sterile and should be large enough to hold the carcass while rinsing, the bags FSIS will be using for the Salmonella sampling program measure approximately 18″ × 24″. Large turkeys should be placed in a plain, clear polypropylene autoclave bag , about 24″ × 30″ to 36″).

2. 600 ml sterile, Butterfield's phosphate diluent (BPD)

3. Plastic tie wraps or thick rubber bands or equivalent, if needed to secure sample bag

4. Sterile gloves

5. Optional—sterile, leak-proof container (see step 12 Alternate procedure)

Collection

Read the sections under Pre-sampling Preparation and Preparation for Sample Collection before beginning the sampling procedure. Use a predetermined random selection procedure to select the carcass to be sampled. The randomly selected bird will be collected after the chiller, at the end of the drip line as follows:

1. Ensure that all supplies are on hand and readily available. An assistant will be needed to hold the bag for collecting the bird.

2. Have an assistant open the large sterile stomacher-type bag (designated for rinsing the carcass) and be ready to receive the turkey carcass. (Rubbing the top edges of the bag between the thumb and index finger will cause the opening to gap open).

(Alternately: If no assistant is available, place the closed large sampling bag into a bucket or pail (e.g., use the bag to ''line'' a bucket like a trash-can liner), then open the bag. The bucket will be used as a holder or stand to support the bag. Do not contaminate the inner surfaces of the sampling bag.)

3. Put on sterile gloves.

4. Remove the selected turkey from the drip line by grasping it by the legs and allowing any fluid to drain from the cavity.

5. Place the turkey carcass, vent side up, into a sterile sampling bag. Only the carcass should come in contact with the inside of the bag.

6. Manipulate the loose neck skin on the carcass through the bag and position it over the neck bone area to act as a cushion and prevent puncturing of the bag. The assistant will need to support the carcass with one hand on the bottom of the bag.

7. While still supporting the bottom of the bag, have the assistant open the bag with the other hand. Alternately, rest the bottom of the bag on a pre-sanitized surface (i.e. a table), and while still supporting the carcass in the bag, open the bag with the other hand.

8. Add the sterile BPD (600 ml) to the bag containing the carcass, pouring the diluent over the carcass.

9. Take the bag from the assistant and expel excess air from the bag and close the top. While securely holding the bag, rinse the bird inside and out using a rocking motion for 30 shakes (approximately one minute). This is done by holding the carcass through the bag with one hand and the closed top of the bag with the other hand. Holding the bird securely with both hands, rock in an arcing motion alternating the weight of the bird from one hand to the other (motion like drawing an invisible rainbow or arch), assuring that all surfaces (interior and exterior of the carcass) are rinsed.

10. Hand the bag back to the assistant.

11. With a gloved hand, remove the carcass from the bag letting excess fluid drain back into the bag. Since the carcass was rinsed with a sterile solution, it can be returned to the chill tank. Be sure not to touch the interior of the bag with your gloved hand.

12. Expel excess air, taking care not to expel any rinse fluid. Secure the top of the bag so that the rinse fluid will not spill out or become contaminated.

(Alternately, *at least* 30 milliliters of rinse fluid can be poured into a sterile, leak-proof container and sent to the lab for analysis.)

13. Place the sample bag (or container) into another bag and secure the opening of the outer bag.

14. (a) If samples are to be analyzed at an ON-SITE LABORATORY, begin sample preparation for the selected method of analysis. (See Analytical Methods section.)

(b) If samples are to be analyzed at an OUTSIDE (OFF-SITE) LABORATORY, follow the procedure in the Sample Shipment section.

Sample Shipment

Samples analyzed on-site must be analyzed as soon after collection as possible. If no on-site facilities are available, the samples must be shipped the same calendar day as collected, to an outside laboratory. The samples must be analyzed no later than the day after collection.

1. Prechill shipping container by placing the open shipping container in the refrigerator at least the day before sampling.

2. Place the appropriately-labeled, double-bagged sample in the prechilled shipping container in an upright position to prevent spillage. Newspaper may be used for cushioning the sample and holding it in the upright position. Ensure that samples are maintained at refrigeration temperature. Refrigeration temperatures limit multiplication of any microorganisms present.

3. Place a corrugated cardboard pad on top of samples. The corrugated pad prevents direct contact of frozen gel packs with the samples. Next, place the frozen gel pack(s) on top of the corrugated pad. Use sufficient frozen coolant to keep the sample refrigerated during shipment to the designated laboratory. Insert foam plug and press it down to minimize shipper head space.

4. Ship samples (via overnight delivery or courier) to the assigned laboratory.

Analytical Methods

Samples must be analyzed using one of the *E. coli* (Biotype I) quantitation methods found in the Official Methods of Analysis of the Association of Official Analytical Chemists (AOAC), International, 16th edition, or by any method which is validated by a scientific body in collaborative trials against the three tube Most Probable Number (MPN) method and agreeing with the 95% upper and lower confidence limits of the appropriate MPN index.

Suggested Quantitation Schemes

For poultry rinse fluid samples, if a generic one ml plating technique is used for *E. coli* quantitation, the plate count would not have to be divided to get the count per ml of rinse fluid. To cover the marginal and unacceptable range for *E. coli* levels (described in later section), the undiluted extract (optional), a 1:10, a 1:100, a 1:1,000 and a 1:10,000 dilution should be plated, preferably in duplicate. Higher or lower dilutions may need to be plated based on the specific product.

If a hydrophobic grid membrane filtration method were used, the only difference would be filtration of one ml of the undiluted extract (optional), 1:10, 1:100, 1:1,000 and 1:10,000 dilutions.

Additional dilutions of the original extract may need to be used if a three tube MPN protocol is used. The three highest dilutions that were positive for *E. coli* are used to calculate the MPN.

Record Keeping

Results of each test must by recorded, in terms of colony forming units per milliliter rinse fluid (cfu/ml) for chicken and turkeys. A process control table or chart can be used to record the results and facilitate evaluation. Results should be recorded in the order of sample collection and include information useful for determining appropriate corrective actions when problems occur. The information needed for each sample includes date and time of sample collection, and, if more than one slaughter line exists, the slaughter line from which the sample was collected. These records are to be maintained at the establishment for twelve months and must be made available to Inspection Program employees on request. Inspection personnel review results over time, to verify effective and consistent process control.

For *E. coli* testing to be the most useful for verifying process control, timeliness is important and the record should be updated with the receipt of each new result. Detailed records should also be kept of any corrective actions taken if process control deviations are detected through microbiological testing.

Applying Performance Criteria to Test Results

Categorizing Test Results

E. coli test levels have been separated into 3 categories for the purpose of process control verification: acceptable, marginal, and unacceptable. (In the Pathogen Reduction/HACCP Regulation, the upper limits for the acceptable and marginal ranges were denoted by m and M.) These categories are described by slaughter species in Table 3.

TABLE 3.—VALUES FOR MARGINAL AND UNACCEPTABLE RESULTS FOR E. COLI PERFORMANCE CRITERIA

Slaughter class	Acceptable range	Marginal range	Unacceptable range
Chicken	100 cfu/ml or less	Over 100 cfu/ml but not over 1,000 cfu/ml	Above 1,000 cfu/ml.
Turkey	NA*	NA*	NA*.

*The FSIS Baseline study has not been completed for this slaughter class. Levels will be set upon completion of this baseline.

To illustrate the use of Table 3, consider a chicken slaughter establishment. *E. coli* test results for this establishment will be acceptable if not above 100 cfu/ml, marginal if above 100 cfu/ml but not above 1,000 cfu/ml, and unacceptable if above 1,000 cfu/ml.

Verification Criteria

The verification criteria are applied to test results in the order that samples are collected. The criteria consist of limits on occurrences of marginal and unacceptable results.

As each new test result is obtained, the verification criteria are applied anew to evaluate the status of process control with respect to fecal contamination.

1. An unacceptable result should trigger immediate action to review process controls, discover the cause if possible, and prevent recurrence.

2. A total of more than three marginal or unacceptable results in the last 13 consecutive results also signals a need to review process controls.

This way of looking at the number of marginal and unacceptable results is described as a ''moving window'' approach in the regulation. With this approach, results are accumulated until 13 have been accrued. After this, only the most recent 13 results—those in the ''moving window''—are considered.

An example of a record of results for Chicken testing is shown (in table form) below for an establishment performing two tests per day.

Test No.	Date	Time collected	Test result (cfu/ml)	Result unacceptable?	Result marginal?	Number marginal or unacceptable in last 13	Pass/Fail?
1	10–07	08:50	120	No	Yes	1	Pass.
2		14:00	10	No	No	1	Pass.
3	10–08	07:10	150	No	Yes	2	Pass.
4		13:00	50	No	No	2	Pass.
5	10–09	10:00	([1])	No	No	2	Pass.
6		12:20	10	No	No	2	Pass.
7	10–10	09:20	800	No	Yes	3	Pass.
8		13:30	10	No	No	3	Pass.
9	10–11	10:50	10	No	No	3	Pass.
10		14:50	10	No	No	3	Pass.
11	10–14	08:40	500	No	Yes	4	Fail.
12		12:00	30	No	No	4	Fail.
13	10–15	09:30	10	No	No	4	Fail.
14		15:20	10	No	No	3	Pass.
15	10–16	07:30	10	No	No	3	Pass.
16		11:40	10	No	No	3	Pass.
17	10–17	10:20	1,200	Yes	No	3	Fail.

[1] Negative.

The following observations can be made on this example:

1. As of 10–14 at 08:40, there are four marginal or unacceptable results in the last 11 results, which exceeds the limit of 3 in 13 consecutive tests.

2. The limit of 3 in 13 also is exceeded for the next two tests, but since no new marginal or unacceptable result has occurred, these failures should not be treated as evidence of a new problem. The log or documentation of corrective action taken for the first failure should be adequate to verify that the deviation or problem, if any, was addressed.

3. On 10–15 at 15:20 the number of marginal or unacceptable results in the last 13 tests goes down to 3 because the marginal result for 10–07 at 08:50 is dropped replaced by an acceptable result as the 13-test window moves ahead 1 test.

4. The result for 10–17 at 10:20 exceeds 1,000 and is unacceptable.

The Figure 1 shows the same results as above displayed in chart form. The numbers along the horizontal axis of the graph (x-axis) refer to the test number in the chart above. The information for each test result, such as the time and date the sample was collected could also be recorded on the chart.

BILLING CODE 3410–DM–P

Figure 1. Example of *E. coli* results using a control chart

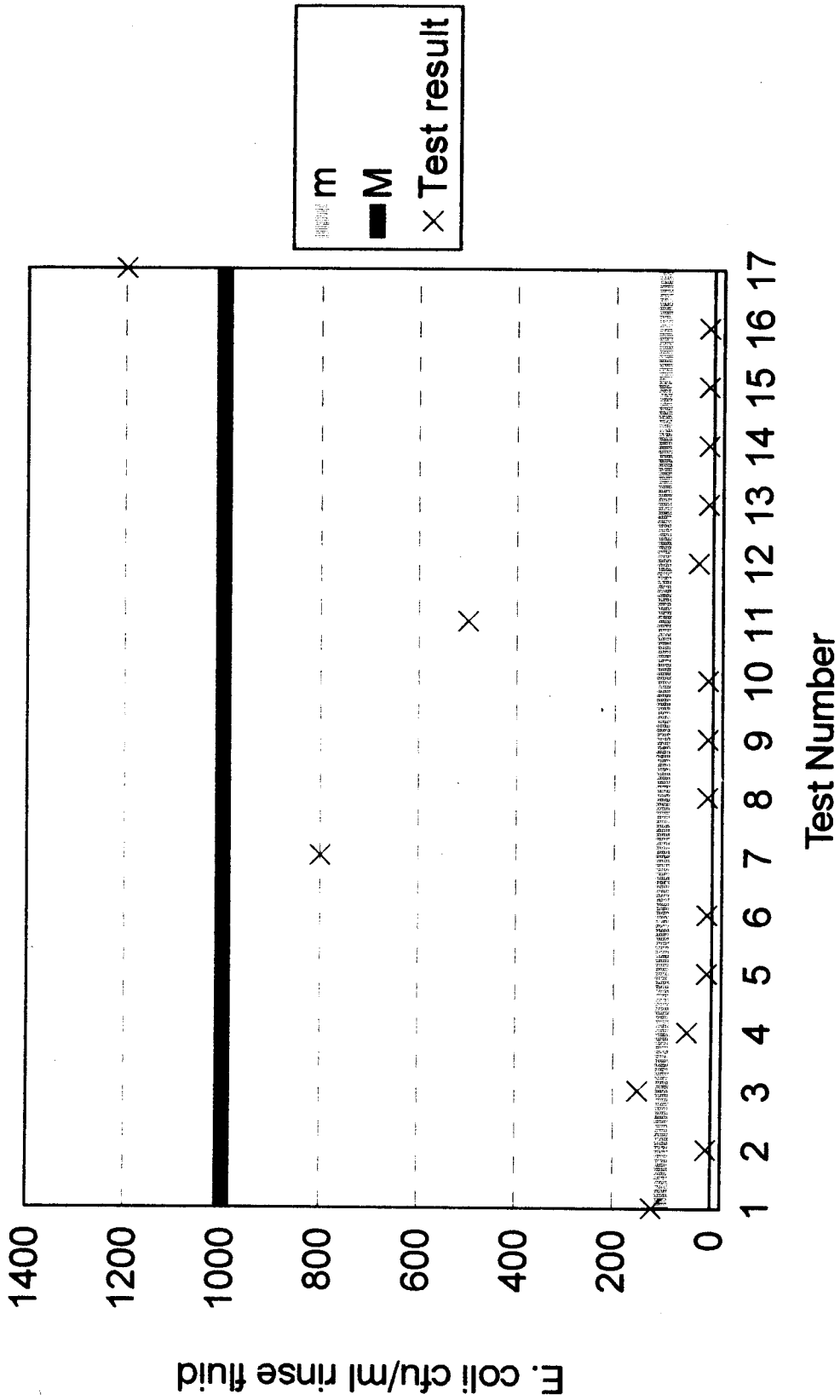

BILLING CODE 3410–DM–C

Note: The following Supplement will not appear in the Code of Federal Regulations.

Supplement—Final Regulatory Impact Assessment for Docket No. 93–016F, ''Pathogen Reduction; Hazard Analysis and Critical Control Point (HACCP) Systems.''

Table of Contents

I. Introduction
A. Purpose
B. Methodology
C. Summary Comparison of Costs and Benefits—Proposal to Final
II. Regulatory Alternatives
A. Market Failure
B. General Regulatory Approaches
C. Need For Improved Process Control
D. Regulatory Alternatives for Process Control
1. Mandatory HACCP
2. Alternatives to Mandatory HACCP
E. Comments on Analysis of Regulatory Alternatives
III. Summary of Impacts
A. Introduction
B. Net Benefit Analysis
C. Impact on ''Smaller'' Businesses
D. Effect on Retail Price
E. Impact on International Trade
F. Impact on Agency Costs
G. Impact on State Programs
H. Consumer Welfare Analysis
IV. Analysis of Public Health Benefits
A. Introduction
B. FSIS Risk Assessment
C. Risk Assessment Framework
D. FSIS Data Initiatives
E. ARS Food Safety Research Program
F. Analysis of Comments on Public Health Benefits
1. Incidence of Foodborne Illness
2. Cost of Foodborne Illness
3. Percentage of Foodborne Illness and Cost of Foodborne Illness Attributable to Meat and Poultry
4. Pathogens Addressed by the Rule
5. Effectiveness of the Rule in Reducing Pathogens
6. Estimated Reduction in Cost of Foodborne Illness
G. Summary
V. Cost Analysis
A. Introduction
B. Methodology for Cost Analysis
C. Regulatory Flexibility
D. Final Cost Estimates
1. Sanitation Standard Operating Procedures
2. Costs of Meeting Pathogen Reduction and Microbial Sampling
3. HACCP Programs—Plan Development and Annual Reassessment Costs
4. HACCP Programs—Recordkeeping Costs
5. HACCP Programs—Training Costs
6. HACCP Programs—Impact on Total Quality Control/Overtime Issues
E. Summary of Costs for Low Volume Producers

Appendix A to Final Regulatory Impact Assessment

I. Introduction

A. Purpose

In docket No. 93–016F, the Food Safety and Inspection Service (FSIS) is promulgating new regulations that require an estimated 9,079 inspected meat and poultry establishments to adopt a Hazard Analysis and Critical Control Points (HACCP) processing control system covering all production operations within 3½ years of final rule publication. The regulation also requires that all 9,079 establishments adopt and implement standard operating procedures (SOP's) for sanitation and establishes, for the first time, food safety performance standards for microorganisms on raw meat and poultry products. This final rule establishes pathogen reduction performance standards for *Salmonella* that are established using the current pathogen prevalence as determined by the national baseline studies. These standards are not directed at judging whether specific lots of a product are adulterated under the law. Rather, compliance with the standards will be determined by a statistical evaluation of the prevalence of bacteria in each establishment's products. FSIS will implement sampling programs to determine compliance with the *Salmonella* standard. The rule does not require inspected establishments to test for *Salmonella*. The pathogen reduction performance standards apply to 2,682 slaughter establishments and another estimated 2,840 establishments that produce raw ground product but do not have slaughter operations.

The final rule also requires that all slaughter establishments test for generic *E. coli* to verify process control for fecal contamination during slaughter and sanitary dressing. Results will be measured against performance criteria established from the national baseline surveys. Under this final rule, the 2,682 inspected slaughter establishments will be required to verify by microbial testing that they are controlling their slaughter and sanitary dressing processes in accordance with the performance criteria. The rule establishes testing frequencies based on production levels, but does not establish the performance criteria as enforceable regulatory standards. As the preamble points out, the criteria will be flexible and subject to change as FSIS and the industry gain experience with them and accumulate more data on establishment performance. The criteria are intended specifically to provide an initial basis upon which slaughter establishments and FSIS can begin to use microbial testing to evaluate the adequacy of establishment controls for slaughter and sanitary dressing procedures.

The objective of this regulation is to reduce the risk of foodborne illness from meat and poultry. The focus is on reducing and eventually minimizing the risk from the following four pathogens:

- *Campylobacter jejuni/coli.*
- *Escherichia coli O157:H7.*
- *Listeria monocytogenes.*
- *Salmonella.*

This document is the final Regulatory Impact Analysis (RIA) prepared in compliance with the provisions of Executive Order 12866 and analyses requirements of the Regulatory Flexibility Act (P.L. 96–354) and the Unfunded Mandates Reform Act (P.L. 104–4). The purpose of this final RIA is to evaluate alternatives to and costs and benefits associated with a mandatory HACCP-based regulatory program for all meat and poultry establishments under inspection.

B. Methodology

The methodology used to develop cost estimates for this final RIA is relatively straightforward. The costs estimates are based on data for average wages, the cost of specific processing equipment or the cost of conducting specific laboratory analyses.

The benefits analysis is less straightforward. The analysis has defined regulatory effectiveness as the percentage of pathogens eliminated at the manufacturing stage. The benefits analysis concludes that there is insufficient knowledge to predict with certainty the effectiveness of the proposed rule. Without specific predictions of effectiveness, FSIS has calculated projected health benefits for a range of effectiveness levels.

The link between regulatory effectiveness and health benefits is the assumption that a reduction in pathogens leads to a proportional reduction in foodborne illness. FSIS has presented the proportional reduction calculation as a mathematical expression that facilitates the calculation of a quantified benefit estimate for the purposes of this final RIA. FSIS has not viewed proportional reduction as a risk model that would have important underlying assumptions that merit discussion or explanation. For a mathematical expression to be a risk model, it must have some basis or credence in the scientific community. That is not the case here. FSIS has acknowledged that very little is known about the relationship between pathogen levels at the manufacturing

stage and dose, i.e., the level of pathogens consumed.

There are many factors that play important roles in the actual link between pathogen levels at the manufacturing stage and frequency of foodborne illness. First, the effectiveness definition of ''percentage of pathogens reduced'' can refer to the percentage of packages that contain pathogens or the level of pathogens within packages. The pathogens-to-illness relationship is further complicated because cross-contamination in kitchens is believed to play a major role. It can not be assumed that a reduction in the number of pathogens present in a package of meat or poultry will prevent a cross-contamination related illness. On the other hand, given that the number of consumed pathogens necessary to cause illness (threshold) can be different for every possible pathogen or individual combination, a reduction in pathogen levels at the time of packaging may prevent illness for many cross-contamination scenarios.

These types of unknowns illustrate why the relationship between pathogen levels and foodborne illness levels remains unknown. As stated above, without a known relationship, FSIS has used the proportional reduction assumption to provide a quantified estimate, recognizing that the real relationship is probably different for each pathogen and category of meat and poultry product.

Risk minimization as the objective of this rule means the elimination of most foodborne illness caused by the contamination of meat and poultry products in inspected establishments by any of the four pathogens listed above. The reduction in pathogens needed to do this is unknown and would vary for individual pathogens and products.

This final RIA includes a discussion of the status of risk assessment for foodborne pathogens that responds to the new Departmental guidelines for preparing risk assessments contained in Departmental Regulation 1521–1, December 21, 1995. Although the statutory requirements for risk analysis included in the Federal Crop Insurance Reform and Department of Agriculture Reorganization Act of 1994 (P.L. 103–354) do not apply to this final rule, there were public comments on the need for additional risk assessment or risk analysis. This final RIA includes the Agency's response to those comments.

On February 3, 1995, FSIS published a preliminary RIA as part of the proposed Pathogen Reduction HACCP rule (60 F.R. 6871). The preliminary RIA announced the availability of a detailed supplemental cost analysis, titled ''Costs of Controlling Pathogenic Organisms on Meat and Poultry,'' which was available from the FSIS Docket Clerk during the comment period. This final RIA will refer to the analysis published with the proposed rule and the supplemental cost analysis collectively as the ''preliminary analysis.''

During the public comment period the Department conducted a number of public hearings, technical conferences and information briefings. On May 22, 1995, the Agency conducted a special hearing in Kansas City dealing with the impacts of the proposed rule on small businesses. In July 1995, FSIS conducted a survey of the State inspection programs to collect additional information to assess the impact on State establishments.

This final RIA is based on the preliminary RIA, the supplemental cost analysis, all written public comments, the records from public hearings including the meeting on small business impacts, the survey of State programs, and any new information or data that have become available during the comment period. The analysis also refers specifically to cost estimates developed by the Research Triangle Institute (RTI) during personal interviews with nine establishments that previously participated in the FSIS HACCP Pilot Program. The RTI report, *HACCP Pilot Program Cost Findings,* August 31, 1994, which was referred to in both written and public hearing comments were developed under contract to FSIS in 1994.

C. Summary Comparison of Costs and Benefits—Proposal to Final

FSIS estimated that the proposed rule would have 20-year industry costs of $2.2 billion. Those costs are presented in Table 1, organized by the regulatory components identified in the proposal.

The estimated costs for the final rule are also presented in Table 1. For some of the regulatory components, it is easy to track the costs from the proposal to the final rule. For example, the costs for Sanitation SOP's remain essentially the same. The reduction from $175.9 to $171.9 million reflects the change in implementation period from 90 days to six months.

The costs for developing and implementing HACCP plans are also directly comparable. The estimated cost has increased for the HACCP component of plan development. FSIS has increased its estimate for this cost after reviewing the public comments and assessing the overall impact on plan development costs of the decisions to eliminate the requirements for implementing time/temperature and antimicrobial treatment requirements prior to HACCP implementation. In the preliminary analysis, the cost for developing HACCP plans was reduced because of the experience that establishments would have gained in developing their plans for implementing time/temperature and antimicrobial treatment requirements.

TABLE 1.—COMPARISON OF COSTS—PROPOSAL TO FINAL

[$ Millions—Present Value of 20-year Costs]

Regulatory component	Proposal	Final
I. Sanitation SOP's	175.9[a]	171.9
II. Time/Temperature Requirements	45.5	0.0
III. Antimicrobial Treatments	51.7	0.0
IV. Micro Testing	1,396.3[b]	174.1
V.		
Compliance with *Salmonella* standards	Not Separately Estimated[c]	55.5–243.5
Compliance with generic *E. coli* criteria	Not Applicable	Not Separately Estimated
VI. HACCP:		
Plan Development	35.7	54.8
Annual Plan Reassessment	0.0	8.9
Recordkeeping (Recording, Reviewing and Storing Data)	456.4	440.5[d]
Initial Training	24.2	22.7[d]
Recurring Training	0.0	22.1[e]
VII. Additional Overtime	20.9	17.5[d]

TABLE 1.—COMPARISON OF COSTS—PROPOSAL TO FINAL—Continued

[$ Millions—Present Value of 20-year Costs]

Regulatory component	Proposal	Final
Subtotal—Industry Costs	2,206.6	968.0–1,156.0
VIII. FSIS Costs	28.6[f]	56.5
Total	2,235.2	1,024.5–1,212.5

[a] The preliminary analysis included a higher cost estimate for sanitation SOP's ($267.8 million) that resulted because of a programming error. The cost estimate of $175.9 million is based on an effective date of 90 days after publication.

[b] The preliminary analysis was based on the premise that microbial testing would be expanded to cover all meat and poultry processing after HACCP implementation. The proposed rule only required sampling for carcasses and raw ground product. Thus, the cost estimate of $1,396.3 million was higher than the actual cost of the proposed sampling requirements.

[c] The preliminary analysis accounted for some of the cost of complying with the new standards under the regulatory components of micro testing, antimicrobial treatments, and time and temperature requirements.

[d] These costs are slightly different from the proposal because of changes in the implementation schedule.

[e] FSIS added costs for recurring training based on the review of public comments.

[f] Based on current estimates for the cost of training, inspector upgrades, and $0.5 million for annual HACCP verification testing.

Table 1 shows that FSIS has added two categories of HACCP costs that were not included in the preliminary cost analysis. A cost for recurring annual HACCP training was added in response to comments that there would be recurring costs because of employee turnover. FSIS also added a minimal cost for annual reassessment of HACCP plans, although the Agency believes that reassessment will be negligible for establishments successfully operating under a HACCP plan.

Table 1 shows that the proposed requirements for time and temperature specifications and antimicrobial treatments have not been included in the final rule. The preliminary analysis treated these items as interim costs that were incurred prior to HACCP implementation. For the time and temperature requirements, the preliminary analysis identified both one-time capital equipment costs and recurring recordkeeping costs. The time and temperature recordkeeping costs were assumed to become part of the HACCP recordkeeping costs. The recurring costs for antimicrobials were assumed to end with HACCP implementation. The preliminary analysis indicated that at the time of HACCP implementation, the slaughter establishments would make a decision on whether to continue the antimicrobial treatments and employ other methods to reduce the microbial load on carcasses. The preliminary analysis did not, however, include a cost component for either continuing the antimicrobial treatments or adding alternative pathogen reduction methods.

Under the micro testing component, the final rule requires that all 2,682 slaughter establishments implement microbial sampling programs using generic *E. coli*. The 20-year cost of this requirement is $174.1 million. After HACCP implementation including validation that the *E. coli* performance criteria are being met, establishments may use alternate testing programs unless FSIS specifically objects. In addition, in the period prior to mandatory HACCP, FSIS will consider exemptions on a case-by-case basis for establishments that are currently using an alternative *E. coli* sampling frequency if the establishment can provide data demonstrating the adequacy of its existing program. The cost estimate of $174.1 million assumes that all slaughter establishments continue to test at the frequencies outlined in the final rule.

Up to this point, all the costs discussed have been predictable in the sense that they refer to a specific requirement directing all establishments or a specific category of establishments to take a well-defined action. FSIS has developed point estimates for all predictable costs. In contrast, the pathogen reduction performance standards for *Salmonella* do not prescribe a set of actions that establishments must take. Because the standards are set using the national prevalence estimates from the baseline studies, the Agency is also not able to predict how many establishments are already meeting the standards or how many will have to modify their current operations to comply.

The cost analysis in Section V recognizes that the performance standards create a set of potential costs for 5,522 establishments, 2,682 slaughter establishments and another estimated 2,840 establishments that produce raw ground product but do not have slaughter operations. The analysis estimates potential costs by developing two scenarios that lead to a range of possible costs depending on how the different industry sectors will respond to the new standards and depending on how many establishments will need to modify their production processes in order to comply.

Reducing pathogens for slaughter establishments involves either modifying the incoming animals or birds, improving the dressing procedures so as to reduce contamination during procedures such as hide removal and evisceration, or using interventions such as antimicrobial treatments to kill or remove the pathogens following contamination. For many establishments, the process of implementing HACCP programs may, by itself, improve the dressing procedures sufficiently to meet the new standards. Other establishments may have to choose between slowing production lines, modifying some attribute of their incoming live animals or birds, or adding post-dressing interventions such as the new steam vacuum process or antimicrobial rinses.

The 2,840 raw ground processing operations will have to control their incoming ingredients either by conducting their own testing or by requiring that suppliers meet purchase specifications. The cost analysis also recognizes that even though the rule does not require the 2,682 slaughter establishments to test for *Salmonella*, some establishments may conduct their own *Salmonella* testing programs to avoid failing a series of tests conducted by the Agency. Thus, it can be argued that the Agency's intent to implement establishment specific testing for *Salmonella* is indirectly requiring the industry to routinely monitor their *Salmonella* levels to assure they will be in compliance.

As shown in Table 1, the two scenarios developed in the cost analysis lead to a range in cost estimates of $55.5 to $243.5 million to comply with the new pathogen reduction standards. Some of these costs are contained in the

Table 1 proposal costs of $51.7 for antimicrobial treatments and the $1,396.3 for micro testing that included the cost of having 5,522 establishments conduct daily *Salmonella* testing for each species slaughtered and each variety of raw ground product produced.

The two cost scenarios were developed to illustrate potential costs for compliance with standards established using the current pathogen prevalence as determined by the national baseline studies. These standards move the Agency's regulatory program in the direction of meeting the food safety objective of minimizing the risk of foodborne illness from pathogens that contaminate meat and poultry products. The Agency has stated its intent to establish tighter standards over time. The Agency recognizes that future tighter standards could impose a new set of compliance costs. To illustrate, where the use of hot water rinses may be adequate to assure compliance with the *Salmonella* standards as established for this rule, such rinses may not be adequate to assure compliance with future standards. Any change in the standards will, however, be implemented through additional rulemaking. At that time the Agency will have extensive data on the distribution of pathogens by establishment and better data on the cost and effectiveness of different interventions. These data enhancements will allow for improved cost analysis of future standard setting activities. Inspected establishments need to consider the Agency's overall food safety objectives when making decisions on capital investments designed to assure compliance with the food safety standards established by this rulemaking.

The cost analysis in Section V also recognizes that the performance criteria for generic *E. coli* create a set of potential costs for 2,682 slaughter establishments. A line for these costs is shown in Table 1 along with the entry that these costs were not separately quantified.

As discussed in Section V, the anticipated actions to comply with the generic *E. coli* criteria are the same as the anticipated actions to comply with the standards for *Salmonella*. FSIS has concluded that if the low cost scenario for *Salmonella* compliance proves to be more accurate, then the Agency would expect to see some compliance costs for the generic *E. coli* performance criteria. If the high cost scenario is correct, then the compliance actions taken to assure compliance with the *Salmonella* standards should also assure compliance with the generic *E. coli* criteria.

Finally, Table 1 includes a cost of $17.5 million associated with additional overtime charges for inspection. While it is recognized that final decisions on the future of the Agency's Total Quality Control (TQC) program have not been made, this analysis includes a conservative impact assumption that the existing TQC regulations will be withdrawn.

Both the preliminary and final analysis identify a maximum potential 20-year public health benefit from $7.13 to $26.59 billion that is tied to eliminating establishment-related contamination from four pathogens on meat and poultry. The contamination from these four pathogens at the manufacturing stage leads to an estimated annual cost of foodborne illness ranging from $0.99 billion to $3.69 billion. The maximum 20-year benefit results from eliminating this annual cost of foodborne illness beginning in the fifth year after publication. Although there is reason to believe significant benefits will be generated during the first four years, for analytical purposes FSIS used the conservative estimate that benefits do not begin until all establishments have HACCP systems in place and pathogen reduction standards for *Salmonella* apply to all establishments that slaughter or produce raw ground product.

There are two principle reasons why benefits will begin to accrue before the fifth year. First, the HACCP requirements and *Salmonella* standards apply to large establishments at 18 months and small establishments at 30 months. The large slaughter establishments account for over 74 percent of total carcass weight. Second, the generic *E. coli* testing requirements are effective six months after publication. The generic *E. coli* results will provide both establishment management and inspection program personnel a tool by which to assess establishments' control over slaughter and sanitary dressing procedures. Although the generic *E. coli* criteria are not being established as regulatory standards, FSIS believes their use will lead to improved control over slaughter and sanitary dressing procedures which will, in turn, lead to reductions in fecal contamination and corresponding reductions in contamination by enteric pathogens. Rather than attempt to estimate the benefits associated with reduced contamination resulting from use of generic *E. coli* testing, this analysis has assumed public health benefits begin in the fifth year. By that time all establishments have had an opportunity to adjust their *E. coli* sampling programs based on their HACCP programs.

The low and high estimates for potential benefits are due to the current uncertainty in estimates for incidence of foodborne illness and death. If the low potential benefit estimate is correct, the analysis shows that the new HACCP-based program must reduce pathogens by 15 to 17 percent for benefits to outweigh projected costs. If the high estimate is the correct estimate, the new program needs to reduce pathogens by only 4 to 5 percent to generate net societal benefits.

As discussed in Section III, there are other benefits to this rule that have not been quantified. Examples include increased public protection from physical hazards and the increased production efficiency that accompanies improved process control.

In the preliminary analysis FSIS took the position that quantified pathogen reduction benefits were related to the overall proposed HACCP-based regulatory program and that there was no way to distribute benefits among the five different components that made up the proposed rule. Under the proposed rule it was essentially impossible to determine the proportion of pathogen reduction benefits that could be attributable to the proposed pathogen reduction standards versus the proposed antimicrobial treatments or time-temperature requirements or the proposed mandatory HACCP programs. Given the revised structure of the final rule, this analysis attributes pathogen reduction benefits to the requirements that all establishments implement HACCP systems and that if those systems are implemented in slaughter establishments or establishments shipping raw ground product, they must have critical limits set to assure compliance with the new pathogen reduction standards for *Salmonella*. However, as discussed above, FSIS believes that pathogen reduction benefits will begin to occur when establishments start using the generic *E. coli* results to assess their control over slaughter and sanitary dressing procedures.

FSIS believes that the Sanitation SOP's component of this final rule has significant benefits in terms of increased productivity for inspection resources. The HACCP component also has productivity benefits in addition to public health benefits. One of the reasons FSIS has not yet achieved a program that can focus appropriate resources on the risks of microbial pathogens is that in recent years

national budget problems have provided limited increases in Agency resources compared to the increase in its responsibilities generated by industry growth, the Federal takeover of more State programs, and new food production technologies and products. For most of its history, the inspection program was able to obtain additional resources when it took on new responsibilities. Now FSIS is faced with taking on new responsibilities with the same resources.

The final rule is a necessary component of an FSIS management strategy that will raise the productivity of current resources so that the program can maintain all its consumer protection objectives. Raising productivity requires raising outputs, reducing inputs or any combination of the two that gets more done for less. Productivity can be increased in today's inspection program by: (1) focusing resource use on the basis of risk, giving the highest priority to safety objectives; (2) clarifying the respective responsibilities of government and industry to assure the best use of government resources; and (3) designing new methods of inspection that are more efficient than existing inspection but which maintain or improve consumer protection.

The Sanitation SOP's and HACCP requirements are designed to accomplish objectives in all three of the above areas. With SOP's FSIS can monitor sanitation plans with fewer resources than it takes to conduct comprehensive sanitation reviews. The benefit of the SOP's is, therefore, the capacity to reallocate inspection resources to other activities where the payoff in terms of reducing the risk of foodborne illness may be greater. With SOP's there is less likelihood that establishments will be able to substitute the inspector's sanitation review for their own sanitation program. Similarly, with HACCP there is less likelihood that firms can use inspection as a substitute for their own control programs. In both cases productivity is enhanced by clarifying responsibilities. The benefits associated with increased productivity are difficult to quantify because the precise reallocation of inspection resources is not yet clear.

Finally, with the implementation of this rule, FSIS intends to introduce new methods of inspection that are more efficient than those currently in place. As noted above, more efficient methods is the third way in which productivity can be increased in the inspection system.

II. Regulatory Alternatives

A. Market Failure

Consumers make choices about the food they purchase based upon factors such as price, appearance, convenience, texture, smell, and perceived quality. In an ideal world, people would be able to make these decisions with full information about product attributes and choose those foods which maximize their satisfaction. In the real world, however, information deficits about food safety complicate consumer buying decisions.

Since all raw meat and poultry products contain microorganisms that may include pathogens, raw food unavoidably entails some risk of pathogen exposure and foodborne illness to consumers. However, the presence and level of this risk cannot be determined by a consumer, since pathogens are not visible to the naked eye. Although they may detect unwholesomeness from obvious indications such as unpleasant odor or discoloration caused by spoilage microorganisms, consumers cannot assume products are safe in the absence of spoilage. They simply have no clear-cut way to determine whether the food they buy is safe to handle and eat.

When foodborne illness does occur, consumers often cannot correlate the symptoms they experience with a specific food because some pathogens do not cause illness until several days, weeks or even months after exposure. Thus, food safety attributes are often not apparent to consumers either before purchase or immediately after consumption of the food. This information deficit also applies to wholesalers and retailers who generally use the same sensory tests—sight and smell—to determine whether a food is safe to sell or serve.

The societal impact of this food safety information deficit is a lack of accountability for foodborne illnesses caused by preventable pathogenic microorganisms. Consumers often cannot trace a transitory illness to any particular food or even be certain it was caused by food. Thus, food retailers and restaurateurs are generally not held accountable by their customers for selling pathogen-contaminated products and they, in turn, do not hold their wholesale suppliers accountable.

This lack of information applies equally to small businesses. Some small businesses have argued for exemption from the rule because they sell most of their product to family, friends and neighbors, but they are overlooking the fact that perhaps the majority of foodborne illness victims may believe they had some type of flu virus or other illness and have no idea that their illness was foodborne and, if they do, they have no idea as to the source. Without feedback, (i.e., without a connection of product to illness), there is no market where buyers and sellers have sufficient information upon which to judge purchase decisions. Without feedback there is insufficient incentive to make substantial improvements in process control.

This lack of marketplace accountability for foodborne illness means that meat and poultry producers and processors have little incentive to incur extra costs for more than minimal pathogen controls. The widespread lack of information about pathogen sources means that businesses at every level from farm to final sale can market unsafe products and not suffer legal consequences or a reduced demand for their product. An additional complication is that raw product is often fungible at early stages of the marketing chain. For example, beef from several slaughterhouses may be combined in a batch of hamburger delivered to a fast food chain. Painstaking investigation by public health officials in cases of widespread disease often fails to identity foodborne illness causes; in half the outbreaks the etiology is unknown.

Most markets in industrialized economies operate without close regulation of production processes in spite of consumers having limited technical or scientific knowledge about goods in commerce. Branded products and producer reputations often substitute for technical or scientific information and result in repeat purchases. Thus, brand names and product reputations become valuable capital for producers.

In the U.S. food industry, nationally recognized brand names have historically provided significant motivation for manufacturers to ensure safe products. In recent years, more and more raw meat and poultry have come to be marketed under brand names. Nevertheless, not even all brand name producers produce their products under the best available safety controls. Further, a significant part of meat and poultry, particularly raw products, are not brand name products and are not produced under conditions that assure the lowest practical risk of pathogens.

The failure of meat and poultry industry manufacturers to produce products with the lowest risk of pathogens and other hazards cannot be attributed to a lack of knowledge or appropriate technologies. The science and technology required to significantly

reduce meat and poultry pathogens and other hazards is well established, readily available and commercially practical.

Explanations for why a large portion of the meat and poultry industry has not taken full advantage of available science and technology to effectively control manufacturing processes include the following:

1. Meat and poultry processing businesses are relatively easy to enter; there are no training or certification requirements for establishment operators. Consequently, the level of scientific and technical knowledge of management in many establishments is minimal.

2. The industry is very competitive and largely composed of small and medium-sized firms that have limited capital and small profits.

3. Management in many of these establishments has little incentive to make capital improvements for product safety because results from that investment are not distinguishable by customers and therefore yield no income.

In spite of these barriers, many industry establishments do produce meat or poultry products using process controls that assure the lowest practical risk of pathogens and other hazards.

FSIS has concluded that the lack of consumer information about meat and poultry product safety and the absence of adequate incentives for industry to provide more than minimal levels of processing safety represents a market failure requiring Federal regulatory intervention to protect public health.

B. General Regulatory Approaches

The problem of microbial pathogens in meat and poultry has become increasingly apparent. Documented cases of foodborne illness each year, some of which have resulted in death, represent a public health risk that FSIS judges to be unacceptable. Within existing authorities there are four broad regulatory approaches the Department could use to address this unacceptable public health risk.

- Market Incentives.
- Information and Education.
- Voluntary Industry Standards.
- Government Standards.

The final rule represents the fourth approach.

The above discussion on market failure summarizes why FSIS has concluded that the market will not address the public health risk resulting from microbial pathogens in meat and poultry.

The role and effectiveness of consumer and food service worker education in assuring food safety was raised in public comments. For example, comments suggested that since most foodborne illness involves temperature abuse or consumer/food handler mishandling, consumer education offers the most cost-effective approach. FSIS sees a clear role for education and agrees that education is essential for assuring food safety. However, experience has shown that education alone has limited effectiveness in reducing foodborne illness. The effectiveness of education for food safety, and, indeed, for improving diets and other food related behavior, has not been demonstrated. FSIS views education as a valuable adjunct to other regulatory approaches, but it has no evidence that a major increase in education expenditures will produce the behaviors required to reduce foodborne illness.

A voluntary industry standard would call for the formation of a standards setting group, such as the American National Standards Institute (ANSI) to develop and publish a voluntary standard. Compliance with such a voluntary standard would be determined by third-party testing and certification. For example, Underwriter's Laboratory (UL) tests and certifies electronic components for industry-wide standards. FSIS has not seen any evidence that the industry is prepared to undertake, or even desires a voluntary standards approach. This is understandable. Because the principles underlying the safe production of meat and poultry are the same regardless of who administers the standards, an industry administered system is likely to be more expensive and less effective than a government one. The lack of power to mandate participation reduces the value of standard setting to participants, since foodborne illness episodes attributable to non-participants tend to raise suspicion of all similar products. Further, the industry would be called upon to pay the enforcement cost which under the present rule would be paid by the government.

For these reasons, the Department concludes that mandatory process control regulations offer the best approach for addressing this unacceptable public health risk.

C. Need For Improved Process Control

FSIS has determined that effective process control is needed throughout the meat and poultry industry in order to minimize pathogen contamination and control other health hazards. Accordingly, a regulatory strategy has been formulated to mandate process control improvements to achieve immediate reductions and an eventual minimization of the risk of meat and poultry pathogens, chemical, and physical hazards in the nation's food supply. This strategy is supported by consumers, scientists, and the majority of meat and poultry industry processors who already recognize the benefits of good process control.

Process control is a proactive strategy that all segments of industry can undertake to anticipate manufacturing problems in advance and prevent unsafe foods from being produced. In practice, process control is a systematic means to:

- Identify and control production hazards.
- Determine control points in the processing system.
- Establish standard measures for each control point.
- Set procedures for establishment workers to monitor requirements.
- Provide clear instructions for appropriate corrective actions when a control point goes out of control.
- Establish record-keeping to document control point measurements.
- Provide procedures for verification tests to ensure that the system continues to operate as planned.

The process control strategy summarized in this paper is founded on three principles:

1. USDA regulatory policy should be focused on providing a solution to meat and poultry biological, chemical, and physical hazards that present the highest public health risks.

2. It is essential that the Nation's food safety system address pathogenic microorganisms which present the greatest foodborne risk to human health.

3. These pathogens and resulting risks of foodborne illness can be largely avoided by uniform meat and poultry industry efforts to attain and maintain more effective methods of control during the manufacturing process.

The focus of this strategy is explicitly on prevention; it is designed to prevent the production of defective product as opposed to more costly and less effective detect-and-condemn methods.

Process control is not a substitute for inspection any more than inspection could be a substitute for process control. This distinction is important because Federal inspection was never intended to be—and cannot be—the front-line control for food safety in meat and poultry processing establishments. Safety controls must be built into the manufacturing process and be administered continuously by industry. The objective of inspection in a process control environment is to assure that those controls are present, adequate, and properly used.

To summarize, the process control regulatory strategy promulgated by this rule will among its other well established attributes, correct two important deficiencies in the nation's current food safety effort. It will: (1) provide industry the tools and incentive to reduce meat and poultry pathogens as a means to improve food safety, and (2) help focus Federal inspection on the highest product, process and establishment risks, and, at the same time, clarify that the industry is responsible for producing safe meat and poultry, while the Government's role is oversight.

Factors Considered in Evaluating a Process Control Strategy

The process control regulatory strategy was evaluated using five factors for effectiveness. A processing control program is effective if it:

1. Controls production safety hazards.
2. Reduces foodborne illness.
3. Makes inspection more effective.
4. Increases consumer confidence.
5. Provides the opportunity for increased productivity.

The following sections discuss these five effectiveness factors that have been applied to evaluate process control alternatives.

Controls Production Safety Hazards

Process control is a system for identifying food hazards and reducing or eliminating the risks they present. In operation, control points are established in a food production line where potential health hazards exist; management of these points has proven to be effective in reducing the probability that unsafe product will be produced. Ongoing records of each process control will enable establishment managers and quality control personnel to spot trends that could lead to problems and devise a strategy that prevents them before they occur.

Detection by end product testing is not a viable alternative to process control because it only sorts good product from bad and does not address the root cause of unacceptable foods. Additionally, keeping ''bad'' foods out of commerce through sorting end product is possible only when tests and standards for sampling are well established and it is practical only where the ''test'' is not expensive because sorting requires a huge number of samples for reliability.

Reduces Foodborne Illness

As industry improves its control over the safety aspects of meat and poultry production, foodborne illness will begin to decline. This is the principal non-negotiable goal for both USDA and industry.

The precise occurrence of human health problems attributed to pathogenic microorganisms or other potential foodborne hazards, such as chemical contaminants, animal drug residues, pesticides, extraneous materials, or other physical contaminants is not known. Foodborne illness is nevertheless recognized by both domestic and international scientists as a significant public health problem and there is wide agreement that pathogenic microorganisms are the major cause of food-related disease. The estimated annual (not discounted) cost of foodborne illness attributable to meat and poultry products from the four pathogens that are the focus of this regulation is from $1.1 to $4.1 billion. FSIS estimates that 90 percent of this annual cost, $0.99 to $3.69 billion, is attributable to contamination that occurs in establishments.

Makes Inspection More Effective

Currently, the FSIS inspectors in meat and poultry establishments that are not assigned to slaughter line positions perform selected inspection tasks that generate independent data about an establishment's production processes and environment. This activity produces ''snapshots'' of establishment operations at a particular moment. In contrast, process control generates records of establishment performance over time. These records and periodic verification inspections will enable FSIS inspectors to see how an establishment operates at all times, i.e., whether and where processing problems have occurred, and how problems were addressed.

The availability of more and better processing data will establish trends that set benchmarks from which deviations can be more quickly and accurately assessed. USDA inspectors will be trained to spot these deviations and take action when needed to ensure establishments bring a faulty process back into control. This type of Federal oversight is substantially more effective than a regulatory program that merely detects and condemns faulty end products. In the words of the National Advisory Committee on Microbiological Criteria for Foods, ''Controlling, monitoring, and verifying processing systems are more effective than relying upon end-product testing to assure a safe product.''

Increases Consumer Confidence

The number of foodborne illness outbreaks and incidents attributable to pathogens in meat or poultry raise questions about whether Federal inspection is as effective as it should be. Highly visible public controversies about meat and poultry inspection indicate an erosion of public confidence in the safety of meat and poultry products. There are growing demands that USDA improve its regulation of pathogens. The process control regulatory strategy described in this paper is USDA's response to those demands.

Many outbreaks of foodborne illness have been determined to be caused by mishandling of meat and poultry products after federally inspected processing. USDA believes that additional efforts to reduce pathogens during manufacturing will reduce these risks as well. This coupled with the improved retail regulatory controls from state adoption and enforcement of the Food Code should reduce this cause of illness. The Food Code is an FDA publication, a reference that provides guidance to retail outlets such as restaurants and grocery stores and institutions such as nursing homes on how to prepare food to prevent foodborne illness. State and local regulatory bodies use the FDA Food Code as a model to help develop or update their food safety rules and to be consistent with national food regulatory policy.

A significant portion of the meat and poultry industry do not take advantage of readily available methods to control their manufacturing processes. The Department has concluded that further regulation will bring industry standards up to what can practically be achieved in the manufacture of meat and poultry products through current scientific knowledge and available process control techniques. Raising the safety floor through regulations that mandate better process control will demonstrate to the public that USDA and industry are making a concerted effort to reduce the risk of foodborne illness from meat and poultry.

The economic benefits of increased consumer confidence can be conceptually realized as the amount consumers would be willing to pay for safer food. This ''willingness to pay'' reflects consumer desires to avoid foodborne illness and the expected medical and other costs associated with it. However, the data are not available to make quantitative estimates of this benefit.

Provides the Opportunity for Increased Productivity

Better process control is a sound and rational investment in the future of our

nation's meat and poultry industry. USDA's process control strategy will educate industry management about the need and methodology for development of a consistent, preventive, problem-solving approach to safety hazards, which can be expanded to other business objectives such as product quality and production efficiency. There is considerable evidence of how process control has improved worldwide industrial productivity in the past 40 years. This proposal will extend process control principles to parts of the meat and poultry industry that have not formerly used them.

Some important non-safety benefits that will accrue from industry use of better process control methods are:

- First, better production controls will result in more efficient processing operations overall with fewer product defects. Fewer defects mean less reworking, waste and give-away, resulting in increased yields and more profit opportunities.
- Second, better controls will significantly reduce the risk to processors that product with food safety defects will slip into commerce. Expensive and embarrassing product recalls can be, for the most part, avoided or greatly reduced with proper process controls.
- Third, better control of pathogens will impact all microorganisms, including those responsible for decomposition, resulting in quality improvement and longer shelf life for products.
- Fourth, better production controls improve establishment employee productivity which improves profit opportunities.

D. Regulatory Alternatives for Process Control

1. Mandatory HACCP

Considering the five effectiveness criteria of process control discussed above, the most effective means for generating the benefits reflected in these criteria is a mandatory HACCP regulatory program. This alternative clearly meets all five criteria described above. In fact, a mandatory HACCP program was judged to be the only option that will effect adequate processing improvements in all establishments throughout the industry. Only through mandatory HACCP can pathogen risks be minimized to the fullest extent possible; thereby significantly reducing foodborne illness, improving effectiveness of inspection, increasing consumer confidence, and ensuring a more viable industry. No other alternative accomplishes as much in these five areas as mandatory HACCP.

HACCP is a process control strategy that has been scientifically proven effective in food manufacturing establishments. HACCP is widely recognized by scientific authorities such as the National Academy of Sciences and international organizations such as the Codex Alimentarius. It is used today by a number of establishments in the food industry to produce consistently safe products. This approach has been supported for years by numerous groups that have studied USDA meat and poultry regulatory activities.

In 1983 FSIS asked the National Academy of Sciences (NAS) to evaluate the scientific basis of its inspection system and recommend a modernization agenda. The resulting report, ''Meat and Poultry Inspection, The Scientific Basis of the Nation's Program,'' National Academy Press, 1985 was the first comprehensive evaluation of a scientific basis for inspection. The 1985 NAS report provided a blueprint for change: it recommended that FSIS focus on pathogenic microorganisms and require that *all* official establishments operate under a HACCP system to control pathogens and other safety hazards.

After urging (NAS Recommendations, Page 4) the intensification of ''current efforts to control and eliminate contamination with micro-organisms that cause disease in humans,'' NAS encouraged (Page 135) USDA to ''move as vigorously as possible in the application of the HACCP concept to each and every step in establishment operations, in all types of enterprises involved in the production, processing, and storage of meat and poultry products.''

The General Accounting Office (GAO) has also identified needed improvements in USDA's present inspection system. In its reports and congressional testimony, and in numerous publications, GAO has endorsed HACCP as the most scientific system available to protect consumers from foodborne illness. This sentiment is most clearly expressed in a May 1994 report, ''Food Safety: Risk-Based Inspections and Microbial Monitoring Needed for Meat and Poultry,'' in which GAO recommended development of a mandatory HACCP program that includes microbial testing guidelines. GAO urged USDA to assist meat and poultry establishments in the development of their microbial testing programs by, among other things, disseminating information on the programs already in operation.

A third major proponent of HACCP is the National Advisory Committee on Microbiological Criteria for Foods (NACMCF), which was established in 1988 by the Secretary of Agriculture to advise and provide recommendations to the Secretaries of Agriculture and Health and Human Services on developing microbiological criteria to assess food safety and wholesomeness. Since 1989, NACMCF has prepared a series of reports on the development and implementation of HACCP. As one of its first tasks, the Committee developed ''HACCP Principles for Food Production'' in November 1989. In this report, the Committee endorsed HACCP as a rational approach to ensure food safety and set forth principles to standardize the technique. In 1992, the Committee issued an updated guide, ''Hazard Analysis and Critical Control Point System.''

In 1993 NACMCF defined the roles of regulatory agencies and industry in implementing HACCP. ''The Role of Regulatory Agencies and Industry in HACCP'' proposed responsibilities for FDA, USDA, and other agencies and industry during various phases of HACCP implementation. Similar suggestions for program change have been voiced by consumers, industry, state and local government representatives, as well as other constituent groups. For example, consumers at recent public hearings and the HACCP Round Table supported implementation of mandatory HACCP throughout the meat and poultry industry.

The meat and poultry industry has itself provided broad support for HACCP as a means to control pathogens, emphasizing that HACCP-based food production, distribution, and preparation can do more to protect public health than any Federal inspection program. They have recommended that HACCP be used to anticipate microbiological hazards in food systems and to identify risks in new and traditional products. State departments of health and agriculture have also endorsed the HACCP approach.

2. Alternatives to Mandatory HACCP

FSIS examined six other approaches before determining that mandatory HACCP was the most effective means for assuring process control in the meat and poultry industries.

1. Status quo
2. Intensify present inspection
3. Voluntary HACCP regulatory program
4. Mandatory HACCP regulation with exemption for small businesses
5. Mandatory HACCP regulation only for ready-to-eat products

6. Modified HACCP—recording deviations and responses only

These alternatives were assessed using the five effectiveness criteria presented in the previous section. The following six sections summarize the appraisal of each alternative.

Status Quo

This option would essentially continue establishment processing controls and Federal inspection as they are now. Good establishments with adequate methods for managing process lines would probably remain under control. The Agency, under its present authority, cannot shift resources out of good establishments so the situation of poor performing establishments is unlikely to change. This situation raises immediate questions about the first factor—controls production safety hazards—being met. Experience has proven that Federal inspection cannot substitute for management in establishments which have difficulty producing safe product consistently. Also, inspection cannot be as effective in the current establishment environment as in a process control establishment environment.

The status quo does not target industry and inspection resources on those hazards that lead to the greatest reduction in foodborne illness (factor two). In addition, food safety experts, consumers, and other observers have told USDA they are not satisfied with pathogen control by organoleptic methods as practiced in the present inspection program. Doing nothing new would perpetuate consumer doubts about the ability of Federal inspection to regulate pathogens which is counter to factor four. Consequently, the Department has concluded that business as usual is not an acceptable response to pathogens associated with meat and poultry products. Agency public health responsibilities alone require that more positive actions be taken.

Intensify Present Inspection

As one alternative to the proposed mandatory HACCP regulation, FSIS could intensify its present inspection system, i.e., focus new resources on suspected areas of risk in each establishment. This approach would assign to FSIS responsibility for designing, testing and mandating by specific regulation, process control systems for all meat and poultry products with potential safety hazards. A major flaw with this approach is that the burden of ensuring a safe product would be placed largely on FSIS instead of industry establishments where it belongs. Establishment management would have little motivation to become knowledgeable about process control or to implement process control systems.

The mandating of specific process controls has sometimes succeeded, as a regulatory strategy, for example, in correcting food safety problems in certain ready-to-eat products. However, these controls largely consisted of lethal heat treatments applied during final product processing. This approach is obviously inappropriate for product that is marketed raw which is most frequently associated with meat and poultry foodborne illness. The identification of processes that can be applied to raw product in every establishment would be much more difficult, if not impossible. Thus, intensified command-and-control regulation fails to meet the primary criterion for process control, i.e., control production safety hazards at all stages of meat and poultry slaughter and processing. Related to this failing, inspection would be ineffective without all establishments maintaining process control systems (factor three.) This option would not only require significant resource increases, it represents government taking on more, not less, responsibility for the production process, making it more difficult to focus on the highest risks of foodborne illness. With the burden of control and monitoring on USDA's inspection force rather than on establishment managers, industry performance in reducing foodborne illness would be unlikely to improve (factor two).

Voluntary HACCP Regulatory Program

A voluntary HACCP program would not provide reduction of pathogens uniformly across the processing spectrum because many in industry would choose not to participate. Therefore voluntary HACCP would not be sufficient to attain the necessary reduction in foodborne illness (factor two).

Voluntary HACCP would be implemented most frequently in establishments with good processing controls already, while establishments with unsophisticated controls would be less likely to participate. The explanation for this flaw is to be found in simple economics and, to a large degree, the attitudes of establishment management. Establishments with good processing controls now are most likely to adopt HACCP voluntarily because their management understands the linkage between how a product is handled during preparation and its finished quality and safety.

Conversely, establishments without good processing controls today are much less likely to participate in a voluntary HACCP program. These establishments are more often operated by management that lacks the knowledge or motivation to institute better processing controls. Nevertheless, it is precisely this group of low performing establishments that FSIS must reach to attain its public health goal. Nothing short of a mandatory HACCP regulatory program will be effective in bringing processing improvements to these marginal performers.

The Agency's regulation permitting the use of voluntary Total Quality Control (TQC) Systems provides a useful analogy to how effective a voluntary HACCP program would be. TQC focuses on establishment responsibility for meeting or exceeding the standards set by FSIS for all operations that are conducted in an establishment, including incoming raw materials, processing procedures, critical limits for product standards, and action limits for establishment quality control personnel. These systems operate under Agency oversight with an emphasis on timely and accurate recordkeeping and the necessity for appropriate action to be taken by an establishment when a limit set forth in an approved system is met or exceeded. However, over the last 10 years the number of establishments with active TQC Systems has declined from a high of around 500 (approximately 8% of all establishments) to the present 351 participating establishments (approximately 5% of all establishments). USDA experience has shown that a voluntary approach to HACCP would provide little assurance that a major portion of meat and poultry products had been produced under controls designed to minimize food safety hazards.0

Mandatory HACCP Regulation With Exemption for Small Businesses

Under this alternative, FSIS would mandate HACCP, but also provide an exemption for some category of small businesses as was done with nutrition labeling. While this final regulatory impact analysis does develop very specific definitions for small and very small establishments, the following discussion of comments uses the term ''small'' in a generic sense because many of the comments address small establishments or small businesses without defining these terms. There was a mix of public comments on whether or not HACCP should be mandatory for small businesses.

Comments supporting an exemption from HACCP for small establishments noted that many owner-operators of small establishments oversee the entire operation on a daily basis and can pay closer attention to procedures than can a large establishment. Similar comments pointed out that small establishments pose a minimal potential public health hazard because of the simplicity of their operations, the slow pace of operations, and the small number of potentially affected customers. Other comments pointed out that they sell their product to family, friends and neighbors and that type of market provides the greatest incentive for producing safe product.

Some commenters opposing an exemption did not want to create a two-tiered system. Others opposing an exemption for small establishments would require HACCP for everyone while easing the burden through flexibility of implementation. Several of the commenters opposing any type of exemption from HACCP identified themselves as owners of small establishments. One commenter noted that just because small businesses produce only 2 percent of the product does not mean they are responsible for only 2 percent of the foodborne illness attributable to meat and poultry.

The Agency used the evaluative factors presented above to consider the application of the rule to small establishments. Since major goals in implementing HACCP are to improve processing controls and establishment performance across *all* of industry (factor one) as a means to achieve foodborne illness reduction (factor two), the option to exempt establishments that perform the least process control is inherently flawed. USDA inspection experience shows that some of the small establishments which would be exempted under this option have particular difficulties maintaining control over their processing system.

While it is true that small establishments produce a minimal amount of the total meat and poultry supply, they do produce a full range of products, including those most frequently associated with foodborne illness from the meat and poultry supply.

This option also fails on factor three—provide more effective inspection. Two different inspection systems would be needed: one risk-based system to inspect HACCP establishments with good processing controls; the other to provide resource intensive coverage for establishments that largely do not. If the number of small establishments were to increase, more inspection resources would be required.

For these reasons, the final rule does not include an exemption for small businesses. However, the Agency has made significant changes to ease the burden on small business, including basing microbial sampling programs on production volume and deferring implementation of mandatory HACCP for small and very small businesses as defined in Section V.

Mandatory HACCP Regulation Only for Ready-to-Eat Products

This option would mandate HACCP only for establishments that prepare ready-to-eat meat and poultry products, but not for establishments that produce raw products. However, this decision would leave the public without adequate protection from pathogenic microorganisms clearly associated with product marketed in raw form. Very little reduction in the most frequent causes of foodborne illness (factor two) could be anticipated from this approach.

Government inspection costs would continue to increase to provide traditional resource-intensive inspection for slaughtering and allied processing establishments that would not be subject to mandatory HACCP. Since most of the unsolved problems with pathogenic microorganisms are associated with raw product and not with those products that would be the subject of this HACCP option, this is an especially inappropriate regulatory approach.

Modified HACCP—Recording Deviations and Responses Only

A final alternative considered would be to mandate HACCP, modified to eliminate the record keeping burden to the inspected industry, especially small establishments. Specifically, this option would modify the HACCP record-keeping principles so that instead of demanding continuous records at critical control points, companies would need to record only deviations from critical limits and the response to them. This would mean that HACCP-controlled operations would not generate continuous monitoring data to reflect the operation at critical control points, but would only record data when deviations occurred. This arrangement eliminates the continuous picture of establishment operations which is the underpinning of factor three—make inspection more effective.

Such an approach would substantially reduce the paperwork burdens associated with mandatory HACCP as recommended by NACMCF and recognized by CODEX. However, it would also seriously compromise the usefulness of HACCP as a means to make inspection more effective and avoid program cost increases. Regulatory officials need to have a system which can be reviewed in its entirety, so that a comprehensive picture of the process is available, not just the truncated version which grows out of recording deviations.

E. Comments on Analysis of Regulatory Alternatives

There were several general comments related to either the alternatives discussed in the proposed rule or the level of analysis conducted. There were comments noting that FSIS did not quantify the costs and benefits of the regulatory alternatives. Similar comments suggested that FSIS should have determined cost-benefit ratios for the processed food industry or for ready-to-eat products or for small businesses.

Generating quantitative benefit estimates for different types of products or different industry sectors would be very difficult. The estimates for foodborne illness attributable to meat and poultry have not been broken down by industry sector or type of product. There are no existing estimates for the portion of foodborne illness attributable to meat versus poultry or raw product versus cooked or partially cooked product.

Production volume can not be used as an indicator of potential benefits. Foodborne illness is not proportionally related to production volume because pathogen levels vary significantly by type of product. As noted above, a commenter also pointed out that just because small businesses account for only 2 percent of production does not mean that small businesses account for only 2 percent of foodborne illness.

On the cost side, the estimates are, for the most part, based on industry averages. In reality, costs will vary by industry sector based on the hazards presented and the existing presence of process control. Thus, in response to a comment that suggests that few benefits are available from changing the process for the manufacture of processed foods which are now produced under a zero pathogen standard, the Department would suggest that the costs for implementing HACCP for these products will also be low. Many ready-to-eat products such as cooked patties and roast beef are presently produced under comprehensive process control regulations.

One comment suggested that FSIS consider mandatory HACCP for only firms that produce raw meat and poultry products because that sector of the industry generates most of the problems

and would provide the greatest pathogen reduction benefits per dollar of cost expended. The same commenter found it odd that the Agency did include an alternative for mandatory HACCP for only ready-to-eat products after acknowledging that most of the unsolved problems with pathogenic microorganisms are associated with raw meat and poultry products, rather than ready-to-eat products. In the above discussion of regulatory alternatives, it was noted that mandatory HACCP for only ready-to-eat products is an especially inappropriate regulatory approach. In contrast, a raw product option appears attractive since most of the unsolved problems with pathogenic microorganisms are associated with raw product. Most establishments handle raw product ingredients or prepare a finished raw product. Most of the cost of this rule is associated with controlling the safety hazards of raw product production. Extending the rule to cover all production adds little cost while allowing a single inspection approach, avoiding confusion where raw product production ends and ready-to-eat production begins, and assuring that the potential hazard of recontaminating ready-to-eat product by contact with raw ingredients is always covered by comprehensive HACCP programs.

Other comments noted that FSIS did not analyze an option that accounted for the savings associated with streamlining and modernizing the inspection system or that FSIS should revise the cost-benefit analysis to consider the savings from eliminating the current inspection program. The savings referred to will be used to focus on food safety risks that need more coverage.

III. Summary of Impacts

A. Introduction

This section provides a summary of the costs and benefits that will be discussed in detail in Sections IV and V. The benefits analysis in Section IV and this summary discuss benefits in terms of the reduction in the cost of foodborne illness that results from reductions in pathogen levels. There are other public health benefits beyond the reduction of foodborne illness due to pathogenic bacteria. HACCP systems will also provide increased public protection from risks posed by chemical and physical hazards. There are also benefits beyond public health benefits. As discussed in Section I, the SOP and HACCP requirements have social benefits that derive from the capacity to reallocate inspection resources to other activities where the payoff in terms of reducing the risk of foodborne illness may be greater.

The February 1995 proposal and the subsequent public comment recognized that the HACCP/Pathogen Reduction regulations would also generate benefits for meat and poultry processors. For example, a commenter at a public hearing provided confirmation that the insurance industry is aware of HACCP and has offered reduced liability insurance for firms with improved food safety controls. Other comments noted that improved production efficiency has always been associated with improved process control. Increased customer confidence can also be a benefit to the extent that it has a positive influence on demand.

The benefits analysis in the preliminary RIA noted that benefits also accrue through the reduction of operating costs like the cost of product recalls or the cost of settling product liability claims. Other operating costs include the loss of establishment production due to suspensions for sanitation problems that could be reduced by improved process control, premiums for product liability insurance, loss of product reputation, and reduced demand when a foodborne illness outbreak is publicized identifying a product or company.

The cost analysis in Section V addresses two types of costs associated with this rule. There are the predictable costs associated with requirements directing all establishments or a specific category of establishments to take a well-defined action. Examples include the requirements to develop SOP's and HACCP plans or the requirement to have access to a HACCP-trained individual. This final RIA provides point estimates for all predictable costs. There are also potential costs that may impact some establishments because of current establishment-specific situations. This analysis provides a range of potential costs developed from two different scenarios of possible establishment responses to new pathogen standards.

This summary compares both types of costs with the potential public health benefits related to pathogen reduction, recognizing that there are other potential benefits. The discussion in Section V notes how this rule will set new requirements and also improve compliance with existing requirements. Some of the potential costs discussed in Section V are costs associated with improved compliance with existing standards and should not necessarily be considered costs of this rulemaking.

Public comments demonstrate that the controversy in this rulemaking derives not from the benefit cost ratio itself, which is very favorable, but from the fact that the processors will bear most of the costs while the public, in general, will experience the benefits. The public includes both the consumers of meat and poultry and those who do not consume meat or poultry but who bear the costs of illness in the society. Another area of controversy arises from the lack of proof that the estimated benefits will result from the promulgation of the rule. These doubts are particularly troublesome to those who would have to make resource investments under the rule while benefits largely accrue to others. This is, of course, the standard controversy facing government regulators. The essence of government regulation is that there is a situation where the public undergoes unacceptable risk because the current distribution of costs and benefits is unlikely to change without government intervention. This rule represents the Department's belief that the food safety risks being borne by the public are unacceptable, that they can be reduced through the use of readily available current technologies, and that the uncertainties involved in just how much risks can be reduced should not prevent the Department from making its best effort to reduce the risks.

B. Net Benefit Analysis

Because costs and benefits accrue at different rates over different time periods, to compare costs and benefits it is necessary to examine present value estimates for both cost and benefit streams. To make these comparisons, both the preliminary analysis and this final RIA use a 20-year time period. The present values for costs and benefits are based on a discount rate of 7 percent, the current standard recommended by the Office of Management and Budget.

As discussed above, the cost analysis (Section V) addresses two types of costs. FSIS was able to develop point estimates for the direct costs of complying with the requirements outlined in the rule that all establishments must meet. These predictable costs include the costs of developing and operating HACCP plans and SOP's and the costs of required recordkeeping. There are also potential costs for establishments that may have to purchase new equipment, or modify their production practices to meet the pathogen reduction performance standards for *Salmonella*, or actually implement *Salmonella* testing programs to assure compliance with the new standards. The cost analysis develops a range of cost estimates for these potential costs.

The estimated annual industry costs (not discounted) are summarized in Table 2. These annual costs vary over the first four years as the new HACCP-based program is undergoing its implementation phase. After the initial four years, the recurring costs are estimated at a constant $99.6 to $119.8 million per year. The present value of all industry costs summarized in Table 2 for the 20-year time period is $968 to $1,156 million as shown earlier in Table 1. This total of $968 to $1,156 million ($0.97 to $1.16 billion) is the total industry cost for the rule as shown in Table 3.

TABLE 2.—SUMMARY OF ANNUAL INDUSTRY COSTS—ALL REQUIREMENTS

[$ Thousands]

Cost Category	Year 1	Year 2	Year 3	Year 4	Year 5+
I. Sanitation SOP's:					
Plans and Training	2,992				
Observation and Recording	8,345	16,691	16,691	16,691	16,691
II. *E. coli* Sampling:					
Plans and Training	2,627				
Collection and Analysis	8,716	16,122	16,122	16,122	16,122
Record Review	406	752	752	752	752
III. Compliance with *Salmonella* Standards		5,472–16,899	5,353–25,753	5,811–25,956	5,811–26,079
Compliance with Generic *E. coli* Criteria		(1)	(1)	(1)	(1)
IV. HACCP:					
Plan Development		3,769	27,755	35,464	
Annual Plan Reassessment			69	448	1,179
Initial Training		1,270	8,284	18,435	
Recurring Training		64	542	1,877	2,799
Recordkeeping (Recording, Reviewing and Storing Data)		3,050	18,479	42,478	54,097
V. Additional Overtime		189	837	1,711	2,125
Total	23,086	47,379–58,806	94,884–115,284	139,789–159,934	99,576–119,844

[1] Not Separately Estimated.

TABLE 3.— PRESENT VALUE OF 20-YEAR COSTS AND BENEFITS

[$ Billions]

Effectiveness in reducing pathogens in the manufacturing sector (percent)	Public health benefits		Industry costs
	Low	High	
10	0.71	2.66	0.97–1.16
20	1.43	5.32	0.97–1.16
30	2.14	7.98	0.97–1.16
40	2.85	10.64	0.97–1.16
50	3.57	13.30	0.97–1.16
60	4.28	15.96	0.97–1.16
70	4.99	18.61	0.97–1.16
80	5.71	21.27	0.97–1.16
90	6.42	23.93	0.97–1.16
100	7.13	26.59	0.97–1.16

Note: Analysis assumes zero benefits until year 5. All elements of the HACCP-based program will be in place 42 months after publication of the final rule.

The public health benefits of this rule are discussed in detail in Section IV. The benefits are based on reducing the risk of foodborne illness due to *Campylobacter jejuni/coli, Escherichia coli* 0157:H7, *Listeria monocytogenes* and *Salmonella*. Section IV concludes that these four pathogens are the cause of 1.4 to 4.2 million cases of foodborne illness per year. FSIS has estimated that 90 percent of these cases are caused by contamination occurring at the manufacturing stage that can be addressed by improved process control. This addressable foodborne illness costs society from $0.99 to $3.69 billion, annually. The high and low range occurs because of the current uncertainty in the estimates of the number of cases of foodborne illness and death attributable to the four pathogens. Being without the knowledge to predict the effectiveness of the requirements in the rule to reduce foodborne illness, the Department has calculated projected health benefits for a range of effectiveness levels, where effectiveness refers to the percentage of pathogens eliminated at the manufacturing stage. The link between effectiveness and health benefits is the proportionate reduction assumption which is explained in Section IV. Because of the wide range in estimates for the cost of foodborne illness, each effectiveness level will have a low and high estimate for public health benefits. These estimates of public health benefits are shown in Table 2, as the present value of a 20-year benefit stream.

The analysis assumes that benefits will begin to accrue in year five. The five year lag leads to conservative benefit estimates since the new HACCP-based inspection program will be fully implemented in 42 months, and benefits should accrue during those 42 months as well as in the 1½ years that follow. Limiting the benefit estimates to four pathogens also leads to conservative cost estimates. To the extent that the proportionate reduction estimate may overestimate benefits, these other factors provide conservative balance.

Net benefits exist for every cost and benefit combination illustrated in Table 2 except for the case of 10 percent effectiveness using the low benefit estimate. If the low benefit estimate is correct, the new HACCP-based regulatory program would have to reduce pathogens by 14 to 17 percent to cover the projected 20-year industry costs of $968 to $1,156 million. For the high benefit estimate net benefits begin to occur at an effectiveness level of 4 to 5 percent.

The costs summarized in Tables 1 and 2 have not been reduced to account for firms that already have existing HACCP programs. FSIS does not have a good estimate of the number of such firms.

C. Impact on ''Smaller'' Businesses

The final rule provides regulatory flexibility for smaller firms consistent with the Regulatory Flexibility Act. For the slaughter facilities, the generic *E. coli* sampling requirements vary depending on the number of birds or animals slaughtered annually. This will significantly reduce the microbial

testing costs for smaller establishments which, under the proposed rule, would have been required to test every species or kind they slaughter every day on which slaughter of that species or kind occurs. Under the final rule, the impact on smaller establishments is mitigated by the change to base generic *E. coli* sampling requirements on annual production and by a change to no longer require that every species or kind be sampled. The costs to small establishments are also reduced because the proposed carcass cooling and antimicrobial near term requirements have been eliminated from the final rule and training requirements are more flexible. The requirement to sample each variety of raw ground product, which caused a heavier burden on small establishments, has also been eliminated.

The regulatory burden on small establishments is eased by the provisions which extend the time small establishments have to meet the HACCP system requirements. The detailed cost analysis in Section V outlines the methodology used in developing cost estimates and varying regulatory requirements for the purpose of regulatory flexibility for small establishments.

D. Effect on Retail Price

The preliminary analysis included an estimate that the total four-year implementation costs represented only $0.0024 per pound of fresh meat and poultry. This type of estimate helps put overall cost figures into perspective in terms of the potential increase in food prices. A large number of smaller processors responded very emotionally to the low figure of $0.0024 per pound on the basis that the lack of economies of scale in their businesses means their potential unit cost increases would be far higher. This ''cost-per-pound'' analysis was not meant to imply that the cost impact on all business would be the same. In a competitive industry, the impact on overall retail price is, however, an important indicator of net societal benefits. The four-year implementation costs for the final rule represent $0.0011 to $0.0013 per pound based on 1993 production of 67.15 billion pounds (66.4 billion pounds federally inspected and 748 million state inspected) of meat and poultry on a carcass weight basis. The annual recurring cost of $99.6 to $119.8 million represents $0.0015 to $0.0018 per pound based on 1993 production.

E. Impact on International Trade

The final rule will have an impact on countries and the establishments in those countries that export meat and poultry products to the United States. The inspection statutes require that imported product be produced under an inspection system that is equivalent to the U.S. inspection system. The equivalence of a country's system must be established by the United States before product can be exported to the United States. The notion of equivalence has been clarified under the World Trade Organization (WTO) Agreement on Sanitary and Phytosanitary measures. Under the WTO, all members have an obligation to apply the principle of equivalence on importing countries. Equivalence determinations are based on scientific evidence and risk assessment methodologies.

In light of the WTO emphasis on the use of science to determine equivalence, a number of countries are moving toward implementation of HACCP systems. The preliminary analysis noted that a large portion of the eligible exporting establishments are in countries that are themselves in the process of implementing HACCP and complying with their own country's HACCP requirements may achieve equivalence with the requirements of this rule.

As of January 1, 1995 there were 1,395 establishments in 36 different countries certified to export meat or poultry products to the United States. Canada (599 establishments), Denmark (125 establishments), Australia (111 establishments) and New Zealand (94 establishments) accounted for two-thirds of the 1,395 establishments. These four countries were the source of 85 percent of the 2.6 billion pounds of product imported during 1994. These four countries are currently developing HACCP systems for their respective inspection programs.

Half (18) of the 36 countries have fewer than 10 establishments approved to export products to the U.S. These 18 countries represent a total of 77 establishments, 5 percent of the total. Meeting the equivalency requirements may present a problem for some of these countries in the near term. Their inspection programs will have to meet equivalency requirements for HACCP according to the implementation schedule for domestic establishments, i.e., 18 months for large establishments, 30 months for small establishments and 42 months for very small establishments. This schedule should lessen the burden on smaller establishments.

There are other factors that will affect the burden on foreign establishments. As HACCP becomes the international norm, these establishments will be required to implement changes to meet the requirements of other countries implementing HACCP. Thus, their costs may not be solely associated with U.S. requirements. Establishing impact is further complicated because the U.S. requirements apply only when they are preparing product that is to be exported to the U.S. This product may represent only a small portion of total establishment production.

Upon implementation of these regulations, FSIS will review other countries' meat and poultry systems to ensure that exporting countries have adopted comparable measures, which would entitle them to continue exporting product to the United States. As other countries improve their regulations by adopting provisions comparable to those contained in this rule, it is expected that U.S. exports will similarly be affected, i.e., the receiving countries will be closely reviewing domestic exporting establishments to assure that they are meeting the requirements of the importing country.

FSIS will continue to carry out its import inspection responsibilities with a two-stage approach. The first stage is system review, which consists of an evaluation of the laws, policies, and administration of the inspection system in each eligible country. This overall evaluation will include an assessment of the implementation of HACCP supplemented by on-site reviews of individual establishments, laboratories, and other facilities within the foreign system. The ''equivalency'' of foreign requirements will be determined at this stage.

The second level of review involves port-of-entry inspection by FSIS inspectors to verify the effectiveness of foreign inspection systems. Using statistical sampling plans based on the foreign establishment's history and the nature of the product, FSIS will continue to give greater scrutiny to shipments posing the highest risk. Products that do not meet U.S. requirements, which includes having been produced under a HACCP or HACCP-equivalent system, will be refused entry. FSIS has concluded that requiring HACCP systems in combination with the two-stage inspection approach will better ensure the safety of imported meat and poultry products.

All countries exporting raw products to the U.S. must develop and implement performance standards that are equivalent to the pathogen reduction performance standards for *Salmonella.* They must also be able to demonstrate that they have systems in place to assure

compliance with the standards. As with any other type of standard, FSIS could choose to test imported product for *Salmonella* at port-of-entry to verify the effectiveness of the foreign inspection system.

With respect to the specific requirements for sampling generic *E. coli* to validate control of slaughter and sanitary dressing procedures, it will be necessary for all foreign countries to demonstrate that they have an equivalent procedure to verify that they are controlling their slaughter and sanitary dressing processes.

There were several comments related to trade issues. Most of the comments concerning the impact on exports dealt with the proposed requirement for antimicrobial treatment of U.S. product. That proposed requirement raised particular concerns because the European Union member states and Canada restrict the use of certain antimicrobials on meat and poultry carcasses. The concerns raised in the comments are no longer an issue because the final rule does not require the use of antimicrobials. The final rule will affect exports only if a company has difficulty meeting the microbial performance criteria without using an antimicrobial. One option discussed in the proposed rule was that hot water would be considered to be an acceptable antimicrobial treatment, and that would be acceptable to Canada and the members of the European Union. The public comments also indicated that Trisodium Phosphate (TSP) is approved for use in Canada and the United Kingdom and is being considered by the European Union, Australia, and New Zealand.

Comments related to imports were concerned about the procedures FSIS would use to determine equivalence with the new U.S. requirements. As a condition of the NAFTA Treaty and the GATT Treaty, the United States has agreed to allow imports from countries that have systems of inspection equivalent to that of the United States. FSIS is considering alternative methods for determining that a foreign country's system of inspection can assure that the establishments within that system are using a process control system equivalent to the HACCP-based inspection system outlined in the final rule.

F. Impact on Agency Costs

Implementation of this rule will lead to both one-time nonrecurring costs and recurring costs for FSIS. There are three categories of one-time nonrecurring costs: (1) Training, (2) in-establishment demonstration projects, and (3) laboratory renovation. In order to implement the rule, FSIS will provide training to in-establishment personnel in two segments. The first training segment will cover issues related to sanitation standard operating procedures and generic *E. coli* sampling and testing requirements. The estimated costs for this activity is $3.6 million in the first year of implementation. The second training segment will cover issues related to the implementation of HACCP and is estimated the cost $3.6 million spread over the second and third year of implementation. FSIS will utilize the train-the-trainer approach to minimize the costs of these initiatives. FSIS is also committed to working with States and industry to sponsor HACCP demonstration projects for small businesses. Pursuant to implementation of the HACCP rule, microbiological sampling and testing will increase dramatically. In the period from 1990 to 1995, FSIS averaged approximately 33,000 analyses for microbiology per year. This is estimated to increase to 125,000 analyses per year after HACCP implementation. In order to accommodate this increase, FSIS will renovate its field laboratory facilities to expand their capacity, improve ability to test for a broader range of pathogens, and purchase new equipment. FSIS estimates that the planned renovation will cost $1.5 million.

By implementing this rule, FSIS will incur recurring costs associated with increased microbiological testing and upgraded inspector salaries. FSIS estimates that microtesting costs will increase approximately $3.0 million annually. Of this amount $2.0 million is needed for equipment, supplies, and shipping costs to conduct *Salmonella* testing, $0.5 million for microtesting conducted to verify HACCP systems, and $0.5 million for personnel necessary to handle the increased workload. Under HACCP-based inspection, FSIS personnel will be required to assume greater responsbility for more complex food inspection tasks. Slaughter inspectors will be required to perform health and safety tasks, such as taking microbiological samples, and verifying HACCP systems. Processing inspectors' roles will take them out of the establishment and put them into retail and market place settings to take microbiological samples, and to ensure meat and poultry products are handled in a manner to that minimizes the growth of pathogenic organisms. FSIS estimates that compensating inspectors for assuming more complex food safety tasks will cost $1.6 million per year.

G. Impact on State Programs

Comments stated that FSIS failed to adequately consider the cost of the changes to State programs and that FSIS was increasing the resource demands for State programs without providing adequate funding. The preliminary analysis did not address the impact on State programs. However, FSIS recognizes that the 26 States operating their own meat and poultry inspection programs will likely have to substantially modify their programs after the HACCP/Pathogen Reduction regulation is finalized to remain ''at least equal to'' Federal inspection programs as required by the FMIA and PPIA. During the regulation's implementation period, FSIS will be using the Agency's State-Federal Program staff to assist the States in bringing the necessary changes to the State inspection programs. Although FSIS has requested some additional funds to implement this rule, FSIS has also acknowledged that implementation of this rule will require eliminating some tasks, conducting other tasks differently and streamlining the organization in order to free up resources to fully address the new requirements. FSIS believes that the same type of restructuring or reprogramming will take place within the State programs. This does guarantee, however, that all States with inspection programs will be able to implement the necessary program changes without additional funds. FSIS believes, however, that with FSIS assistance and with the flexibility provided under the ''equal to'' provisions, most of the States should be able to modify their programs with minimal additional funding. To the extent that there are any additional costs, the State inspection programs are eligible to receive up to 50 percent Federal matching funds.

H. Consumer Welfare Analysis

It is likely that at least some of the costs of the new HACCP-based regulatory program will be passed on to consumers in the form of higher prices. Even if costs are fully reflected in retail prices, the impact on consumers and consumption will be small. Retail costs are not expected to increase more than 0.02 percent. Retail demand for meat and poultry is inelastic. A likely range is -0.25 to -0.75. This suggests changes in quantity demanded of less than 0.02 percent. Given that annual per capita meat and poultry consumption is about 211 pounds, retail weight, the impact on individual consumption will be less than 1/10th of a pound per year. In aggregate, with a high impact

scenario, consumption would decrease by about 50 million pounds. These impacts may be overstated if meat and poultry producers pass some costs back to livestock and poultry producers. Improved consumer confidence in the safety of meat and poultry could offset price driven decreases in consumption.

IV. Analysis of Public Health Benefits

A. Introduction

This section addresses the methodology used to develop the estimates for public health benefits that, for the purpose of this final Regulatory Impact Assessment, have been defined as the reduction in the cost of foodborne illness attributable to pathogens that contaminate meat and poultry products at the manufacturing stage. This section is organized around the Agency's responses to the public comments related to benefits. The first part of this section addresses the general comments related to risk assessment. The Agency has responded to these general requirements by providing an overall summary of the current state-of-the-art with respect to risk assessment for foodborne pathogens. The second part of the discussion (see subsection titled ''Analysis of Comments on Public Health Benefits'') addresses the more specific comments on the methodology used to estimate benefits in the preliminary analysis.

Several comments suggested that FSIS has not conducted an adequate risk assessment and/or should conduct a thorough risk assessment before proceeding with the current rulemaking. More focused comments assert that the relationship between pathogen reduction at the manufacturing stage and foodborne illness reduction is unknown. Those comments suggest that establishing that relationship requires a quantitative risk assessment, i.e., an estimate of the probability of adverse health effects (foodborne illness) given a particular level of a hazard (pathogens at manufacturing stage).

The preliminary analysis and this final RIA recognize that the relationship is unknown and acknowledge that there are significant data gaps regarding both likelihood and magnitude of illness and numbers of foodborne pathogens. These data gaps mean that multiple assumptions must be made in order to calculate the probabilities of risk, and FSIS is concerned with this tremendous uncertainty. However, the agency is developing quantitative assessments and believes that these will become the basis on which to make future regulatory decisions. In this rulemaking, FSIS estimates of the risk of foodborne disease linked to specific pathogens are based upon the best judgement of nationally recognized experts in infectious disease, epidemiology, microbiology, and veterinary medicine. FSIS is also relying on a qualitative estimation of risk as expressed in publications and summary reports from the CDC, other public health agencies, and special panels, such as the National Advisory Committee on Microbiological Criteria in Foods and those established by the NAS. Based on this sizable body of information and scientific judgement, FSIS is proceeding to develop benefit estimates using the assumption that a reduction in pathogens leads to a proportionate reduction in illness and death. The benefits analysis could have used a more conservative relationship estimate, e.g., a reduction in pathogens leads to a reduction in illness that is less than proportional. However, given the current level of knowledge, FSIS views the proportional assumption as most appropriate at present.

The Department has initiatives in place that will begin to relate pathogen levels at inspected establishments to incidence of human illness and support quantitative risk assessment (see Section IV–D on FSIS Data Initiatives). The present paucity of data to support a risk model for the major foodborne pathogens causing human disease limits the usefulness of quantitative risk assessment in the regulatory arena of meat and poultry inspection. It is unlikely that any single numerical constant will adequately describe the dose-response relationships for all pathogens associated with all of the products that FSIS regulates, given the complexity of possible interactions of factors associated with the host, the pathogenic strain, the diet, and the environment (CAST, 1994).

The Federal Crop Insurance Reform and Department of Agriculture Reorganization Act of 1994 (P.L. 103–354) now requires that for each proposed major regulation (i.e. economic effects of at least $100 million a year and effects on human health, safety, or the environment) the Department publish an analysis of the risks addressed by the regulation. While this statute does not apply to this final rule, FSIS is providing a qualitative estimation of risk (Tables 4 and 5) and a recommendation to manage risk using HACCP in meat and poultry inspection programs. Concurrently, scientists from FSIS and USDA's Agricultural Research Service (ARS), Economic Research Service (ERS), and modelers from academia and industry continue to develop risk models which blend failure analysis, predictive microbiology, and other models into the framework described by the NAS (NRC, 1983). FSIS believes this approach is flexible and responsive to new data necessary to fully document risks of foodborne diseases.

B. FSIS Risk Assessment

Following the publication of the 1985 National Academy of Sciences (NAS) study on the scientific basis for meat and poultry inspection, FSIS requested that the National Research Council of NAS conduct a follow-up study that included the objective of developing a risk assessment model for the poultry production system. The subsequent report, ''Poultry Inspection: The Basis for a Risk-Assessment Approach'' was published by the National Academy Press in 1987. The 1987 study concluded that the present system of inspection provides little opportunity to detect or control the most significant health risks presented by microbial agents that are pathogenic to humans. The study also concluded that current databases can serve as the basis for a comprehensive, quantitative risk assessment only for certain well-characterized chemical residues.

The committee conducting the study also concluded that their report did constitute a qualitative risk assessment that could be useful for many purposes, including the evaluation of inspection strategies. That assessment found: ''There is evidence linking disease in humans to the presence of pathogens on chickens. For example, epidemiological studies indicate that approximately 48% of *Campylobacter* infections are attributable to chicken. Data also suggest that chicken is probably an important source of salmonellosis in the United States.'' Based on these and other findings, the committee recommended that FSIS ''modify the existing system so that it more directly addresses public health concerns.'' FSIS believes that the implementation of HACCP programs at slaughter for meat and poultry is such a ''modification'' of the food safety system which will address human health hazards, particularly foodborne diseases.

C. Risk Assessment Framework

The National Research Council (1983) presented a framework for risk assessment that has become a standard paradigm to organize risk assessments for chemical and microbial hazards. The framework, consisting of hazard identification, dose-response assessment, exposure assessment, and risk characterization, is flexible and can accommodate many different modeling strategies. The major distinction

between foodborne microbial risk assessments and chemical risk assessments may be the additional uncertainties of microbial growth and survival in food prior to consumption. Survival of pathogens present in a raw food and after cooking can be modeled using predictive microbiology methods. These models can also address the growth of pathogens with time and temperature abuse of raw and cooked foods.

One of the first U.S. publications on the application of predictive microbiology to microbial risk assessment (Buchanan & Whiting, 1996) included estimations of risk of salmonellosis for several ''what-if scenarios'' as examples of potential time and temperature abuses of partially cooked food. The predictive microbiology model was linked to a published dose-response model for salmonellosis (Haas, 1983) to calculate a risk estimate. The dose-response model was developed by empirically fitting data from human feeding studies conducted at high-dose challenges with a number of pathogenic strains of *Salmonella* to the ''beta poisson'' model (Haas, 1983). The authors generated risk estimates for selected cooking and abuse scenarios, but recognized that the risk of illness is zero when the pathogen is not present in the sample even with unsafe food handling. HACCP programs at slaughter are expected to affect pathogen presence and levels before potential time and temperature abuses can occur. Therefore, changes at slaughter, in the duration of cooking, and final storage conditions of the food exert a tremendous impact upon the model outcomes.

An unpublished draft risk model is in development as a research endeavor by Agriculture and Agri-Food Canada and Health Canada. A variety of modeling approaches were organized within the 1983 NRC framework to estimate risk of human illness from *E. coli* 0157:H7 in ground beef. The draft risk model includes many stochastic variables to account for the variability and uncertainty associated with the inputs and assumptions of the model. The authors are developing the model to identify current limitations to the construction of quantitative models which accurately describe the risk of foodborne disease along the farm to fork continuum.

These recent quantitative risk assessment efforts are an encouraging beginning and serve to illustrate the tremendous uncertainties created by insufficient data describing processes throughout the farm to table continuum that contribute to risk. Additional uncertainties surround assumptions based on epidemiologic data for human illness. For example, recent data in the U.S. indicates a growing number of outbreaks of *E. coli* 0157:H7 disease linked to sources other than ground beef. The ecology of the organism on the farm, in the bovine gastrointestinal tract, and in irrigation, recreational, and drinking waters is largely unknown. Additionally, the primary sources of *E. coli* 0157:H7 causing sporadic disease may remain undercooked hamburger and may differ from vehicles causing outbreaks, as has been documented for *Campylobacter* (CDC, 1988). Outbreaks of campylobacteriosis have been caused primarily by unpasteurized milk and contaminated water, yet the overwhelming majority of infections are sporadic and have been linked to undercooked chicken. Control strategies to reduce both outbreak and sporadic case numbers for both of these pathogens may require greater understanding of vehicles of disease and more information than is currently available.

FSIS concludes that risk models for foodborne illnesses are necessarily based largely on assumptions because scientific data describing key foodborne disease processes have not been developed. The models are extremely useful to identify basic research needs that might reduce the uncertainty associated with the inputs and assumptions of the models. The agency is proposing initiatives to generate data which may reduce uncertainties associated with modeling the risk of foodborne diseases. However, application of microbial risk assessment models to regulatory decision-making appears premature at this time. The following is a summary of the availability and limitations of data supporting risk assessment for foodborne pathogens:

1. Hazard Identification

The Agency selected from the pathogens listed in Tables 4 and 5 the three most common enteric pathogens of animal origin: *Campylobacter jejuni/coli, E. coli* 0157:H7, *Salmonella* and one environmental pathogen *Listeria* monocytogenes for consideration in risk assessment. FSIS believes that these four pathogens may contaminate meat and poultry food vehicles at slaughter and can be reduced through improved process control in the manufacturing sector. Available data on estimated human disease incidence are summarized in Table 4. Data on human disease attributable to proven as well as epidemiologically linked pathogens and food vehicles are presented in Table 5. Additional and more precise information for this section regarding estimated national disease incidence and disease severity and duration is expected on these pathogens from the sentinel site surveillance initiative.

2. Exposure Assessment

Rarely can actual exposure to a specific strain of foodborne pathogen be quantified with certainty in foodborne disease outbreaks. Microbes in food are known to be non-homogeneously distributed, imposing additional uncertainty due to sampling error upon the analytical variability of the methods for detection and quantification of microbes in foods. The outbreak strain may or may not be detected in the feces of diarrheal cases or in leftovers or companion samples from suspected lots. The levels detected in leftovers or companion samples from the same lot of food may or may not be representative of the serving that was prepared and consumed since the microbial numbers vary with time and temperature conditions and the initial microbial populations. The amount of the serving consumed may not be known.

The FSIS baseline studies provide data on occurrence of pathogens (likelihood) and levels (magnitude) in uncooked meat and poultry products at slaughter and raw ground processing. Data for likelihood and magnitude of pathogens in the distribution, preparation, and consumption phases of the farm-to-fork continuum of food production are sparse. Predictive microbiology models may be the most cost-effective method to deduce possible exposure scenarios in meat and poultry beyond the slaughter phase that may result in foodborne illness. The likelihood that the selected scenarios of improper cooking and abuse actually occur among U.S. consumers may not be measurable, but the scenarios may be useful in modification of behaviors that pose increased risk to consumers.

3. Dose-Response Assessment

The relationship between the dose of a pathogen and response in the host, when known, can vary greatly for foodborne pathogens. Human feeding studies with foodborne pathogens were largely conducted several decades ago with small numbers of healthy adult males. One study reported both ill and asymptomatic volunteers who had consumed up to 1,000,000,000 pathogenic *Salmonella.* Outbreak data for other *Salmonella* serotypes in food vehicles suggest a range of infective doses from one cell to 1,000,000,000,000 cells (Blaser & Newman, 1982). Fatty food vehicles, including some meat and

poultry products, are thought to protect enteropathogens from stomach acids and digestive enzymes that might otherwise reduce the dose to the intestinal tract and reduce the likelihood of disease. The effects of competition of the pathogen with the large indigenous microbial populations in food (ICMSF, 1980) and in the human gastrointestinal tract (Rolfe, 1991) may reduce the likelihood and/or the severity of foodborne disease.

Even carefully controlled volunteer feeding experiments at doses up to one billion organisms per volunteer have shown variability in the infectious dose of one pathogen for individuals within a group of seemingly healthy, young adults. Extrapolation of empirical models of effects at high doses to low doses typical of properly handled food may or may not be appropriate. The dose-response curve for healthy adult males may not be useful in estimating dose-response relationships for the general population or sensitive sub-populations. The data available from human feeding studies were generated from very few species and strains of bacterial pathogens, excluding *E. coli* 0157:H7. Dose-response modeling is crucial to microbial and chemical risk assessments. FSIS believes that application of dose-response models in food safety regulation requires careful examination of the validity of the assumptions and inputs of the model and of the plausibility of the model as a descriptor of foodborne disease processes.

4. Risk Characterization

The integration of exposure and dose-response models is expected in risk characterization, along with sensitivity and uncertainty analyses (Burmaster & Anderson, 1995) for the risk model. Perhaps of greater significance than the numerical estimate of risk is the uncertainty associated with the estimate. A fully developed risk characterization would include risk estimates and sensitivity/uncertainty analyses for alternative models and assumptions. FSIS is collaborating with scientists in academia, the Agricultural Research Service, the Animal & Plant Health Inspection Service, the Economic Research Service, and the Office of Risk Assessment and Cost Benefit Analysis to develop and validate a risk assessment model for a single pathogen in a single meat product. This model may be modified for other specific pathogens of concern. The expectation of a generic model for all foodborne disease agents in all products does not appear promising based on differences in pathogenesis of bacterial species and strains and in human sensitivity and pathology.

FSIS continues to evaluate new information on foodborne pathogens and on risk assessment methods and tools in accordance with the FSIS public health mission. The NAS Report, the CAST Report and the 1995 Conference recognize HACCP as a system to reduce the likelihood of foodborne illness. The CAST Task Force also concluded that ''the efficacy of a HACCP system depends on the rigor and consistency with which it is designed and implemented and the use of (a) critical control point(s) that will control pathogens.''

D. FSIS Data Initiatives

The 1994 report, ''Foodborne Pathogens: Risks and Consequences, CAST Task Force Report No. 122, September 1994'' concluded that ''a comprehensive system of assessing the risks of human illness from microbial pathogens in the food supply has yet to be devised.'' They cited the limitations of the current food safety information database and the difficulty in accumulating dose response and minimum infective dose data. A recent multidisciplinary conference, ''Tracking Foodborne Pathogens from Farm-to-Table, Data Needs to Evaluate Control Options'', carefully reviewed current databases and confirmed limitations outlined in the CAST Task Force report.

FSIS has established initiatives to improve the quality and quantity of data in two major areas. First, FSIS is working with the Food and Drug Administration (FDA) and the Centers for Disease Control and Prevention (CDC) to establish an active sentinel site surveillance system for the major causes of foodborne illness. This project is designed to accumulate data on the incidence of foodborne illness by pathogen and by food.

Second, the Agency has been developing baseline data for pathogen levels on major food animal species at the time of slaughter. The baseline data will allow the Agency to detect changes in the overall nation-wide pathogen levels. The National Baseline program was initiated in 1992 to provide information on the type and level of microbiological contamination on raw products under Federal inspection. Each sample collected is analyzed for nine microorganisms or groups of organisms. Microbiological baseline data are now available for steers and heifers, cows and bulls, and broiler chickens.

If sufficient data on both pathogen levels and foodborne disease epidemiology result from current and future initiatives, FSIS should be able to develop models showing how these two variables are related for different pathogens. These models should then permit/facilitate a quantitative estimate of risk. Such data are essential for FSIS to evaluate the effect of control measures on both pathogens levels and on foodborne illness.

E. ARS Food Safety Research Program

The Agricultural Research Service (ARS) administers a food safety research program that is currently funded at approximately $45 million per year. This program addresses problems in four different areas; pathogen reduction, mycotoxins, residues, and natural toxins. The reduction of microbial pathogens in food products of animal origin is the most pressing food safety problem today. Consequently, the pathogen reduction component is the largest of the four areas and is currently funded at $18.2 million annually. The ARS research in pathogen reduction addresses both preharvest and animal production, and post harvest problem areas, with approximately equal funding for each.

Ongoing ARS research will help FSIS improve its capability for performing quantitative risk assessment in the area of foodborne pathogens or improve the ability to predict the effectiveness of new pathogen reduction technologies. Ongoing projects include the modeling of bacterial growth or thermal death times which will help set standards for meat and poultry products. Ongoing projects will also provide new laboratory screening or confirmatory methods. Other projects provide and/or evaluate technology and management methods which can help producers achieve lower contamination levels in animals presented for slaughter, such as vaccines or competitive bacterial cultures to prevent pathogens in live animals. There are also technology and management methods for use in slaughter and processing establishments, such as, organic acids for use in carcass sanitation, improvements to the feather picking operation for poultry, washing of trailers to reduce microbiological contamination, and establishment of guidelines on the microbiological safety of recycling cooling solutions for ready-to-cook meat and poultry products. In many cases the research may provide the scientific basis for developing and improving technology, for example, the nature of bacterial attachment to various meat surfaces.

FSIS can and does forward very specific research requests to ARS. In preparation for this final rule, FSIS requested that ARS compare the results

from different microbial sample collection techniques, sponging versus excision at one versus three carcass sites. These studies are currently being conducted on both cow/bull and market hog carcasses. There are other specific ARS projects that will help provide the scientific basis for HACCP through risk assessment, predictive microbiology, and pathogen reduction interventions for several different bacterial pathogens which must be controlled to assure the safety of meat and poultry.

These projects include: (1) Development of models to predict the growth rates, survival times, and thermal death rates for microbial pathogens potentially present in foods, including meat and meat products. (Microbiological modeling is time consuming and expensive because it requires that the data be quantified, that is, that numbers of bacteria are obtained, rather just the knowledge of the presence or absence of a pathogen under the conditions of the test.) The microorganisms being studied include *E. coli* O157:H7, *Listeria monocytogenes,* and *Salmonella.* These models are written into personal computer software that gives FSIS a readily useable tool to help evaluate proposed meat processes and assess out-of-process events. Refining predictive models has the goal of linking an entire process from raw ingredients to distribution of finished product. A specific project is to model the survival of *E. coli* O157:H7 during the manufacture of uncooked, fermented meat products. Using the information obtained, ARS will closely collaborate with other USDA agencies to develop strategies for risk reduction using the various processing techniques, and to create risk assessment models.

(2) Modeling studies to predict the thermal inactivation of spore-forming and non-spore-forming bacterial pathogens of both cooked and ready-to-eat products. These studies will be extended to the cooling of these products to ensure that there is no potential for growth of *Clostridium botulinum* and *C. perfringens.*

(3) Determination of the long-term effects (21 days of storage at refrigerated temperatures) of organic acid treatment of red meat on some key pathogens (*E. coli* O157:H7, *Listeria,* and *Clostridium*), as well as on spoilage bacteria (mesophilic aerobes, lactic acid bacteria, and pseudomonads).

(4) Delineation of the parameters affecting the antibacterial activity of organic acids. These include tissue type (pre-rigor, post-rigor, frozen post rigor), inoculum type (pure culture or inoculated feces), inoculum level and the temperature of spray wash at meat surface. These results should clarify inconsistent reports on antibacterial activity of organic acids and also define optimum conditions to maximize the antibacterial activity of organic acids.

(5) The correlation of the *Campylobacter* levels in broilers from the chill tank with their *Campylobacter* levels during production.

F. Analysis of Comments on Public Health Benefits

There were many comments on the methodology used to estimate public health benefits in the preliminary analysis. This methodology used a series of estimates or assumptions based on incomplete data related to the six following areas:

- Incidence of foodborne illness
- Cost of foodborne illness
- Percentage of foodborne illness and cost of foodborne illness attributable to meat and poultry products
- Pathogens addressed by the rule
- Effectiveness of rule in reducing pathogens
- Estimated reduction in cost of foodborne illness related to reduction of pathogens

To facilitate discussion of the issues raised in comments, the issues are addressed organized by these six areas.

1. Incidence of Foodborne Illness

Table 4 presents the most recent estimates on the incidence of illness and death for selected pathogens along with the latest estimates on the percentage of illness and death which is foodborne. As discussed in the preliminary RIA, Table 4 includes the ''best estimates'' when precise data are not available. Many of these estimates are based on the landmark CDC study by Bennett, Holmberg, Rogers, and Solomon, published in 1987, which used CDC surveillance and outbreak data, published reports, and expert opinion to estimate the overall incidence and case-fatality ratio for all infectious and parasitic diseases. Estimates on the foodborne percentage of illness and death for bacteria in Table 4 are all based on CDC data. The resulting estimates for the number of foodborne cases and deaths are presented in the second and third columns of Table 5.

The benefits for the preliminary analysis and this final RIA are calculated for the three most common enteric pathogens of animal origin: *Campylobacter jejuni/coli, E. coli* O157:H7, *Salmonella* and one environmental pathogen *Listeria monocytogenes.* FSIS believes that these four pathogens can be reduced through improved process control in the manufacturing sector.

Although *Clostridium perfringens* and *Staphylococcus aureus* also cause a significant number of foodborne illnesses, they are not included in the benefits analysis because it is not clear that the HACCP-based regulatory program, which focuses on federally inspected processing, will significantly affect the incidence of disease caused by these organisms. *Staphylococcus aureus* usually enters the food chain through food handlers in restaurants and other commercial kitchens. Although *C. perfringens* may enter the food chain through the slaughter process, it is so ubiquitous in the environment that FSIS will not assume that controls at slaughter will be effective against this pathogen.

One commenter questioned why the Agency has not addressed the public health problem of toxoplasmosis given the Table 5 estimate of $2.7 billion in annual costs. FSIS believes that while process control may help decrease the spread of cysts during boning and cutting operations, most of the *Toxoplasma gondi* cysts are internal to infective muscle tissues and are not addressable by process control. Therefore, FSIS is making the more conservative assumption to exclude this pathogen in the benefits estimate of disease averted.

Many comments suggested that the large range in the illness incidence estimates demonstrates that there are insufficient data on which to base a new regulatory program. Historically, the lack of quantitative data on benefits and specific health risks have meant that health and safety regulations have required decisionmaking under uncertainty and have required the decisionmaker to balance the need to act with the need for additional or improved data. Compared to such issues as whether a chemical is a potential human carcinogen or whether low levels of air pollutants cause adverse health effects, the health effects of enteric pathogens are relatively well documented. If the pathogens enter the food supply, they do, under certain conditions, cause foodborne illness. If their presence can be prevented, no amount of temperature abuse, mishandling or undercooking can lead to foodborne illness.

The Agency believes that the existing estimates on foodborne illness are adequate to conclude that a substantial and intolerable public health problem exists. Furthermore, existing estimates are appropriate for developing estimates on the cost of foodborne illness attributable to meat and poultry. The

Agency notes that similar estimates on the incidence of foodborne illness have been published by scientists from ERS in peer-reviewed journal articles (see footnotes to Table 5) and by the 1994 CAST Task Force.

The above statement that Table 4 includes the most recent estimates of the incidence of illness and death requires further explanation in the case of *Listeria monocytogenes*. The estimates of 1,795–1,860 cases of listeriosis and 445–510 deaths are the ones used in the latest cost of illness study conducted by ERS. ERS is in the process of publishing a comprehensive documentation for the estimates of cost of illness for 1993. In their draft document they acknowledge that the estimate for listeriosis cases originates from an extrapolation to the U.S. population of incidence data from a CDC-conducted surveillance study of six geographic regions in 1986 and 1987 (Gellin *et al.* 1987). They also note that (Tappero *et al.* 1995) found that the incidence of listeriosis has decreased since the 1960's and that projections from the surveillance data suggest that there were 1,092 listeriosis cases and 248 deaths in 1993. ERS did not modify their cost of illness estimates because Tappero *et al.*, was published after their analysis was concluded.

FSIS considered modifying the cost of illness estimates for this final analysis but decided to use the estimates in Tables 4 and 5 because (1) They are the figures that will appear in the upcoming ERS publication and, (2) updating the listeriosis estimates would have minimal impact on the overall cost of illness estimates. Considering the overall range and uncertainties involved in the cost of illness estimates, the change in listeriosis estimates has negligible impact on the regulatory analysis information conveyed through the potential benefits estimate.

The Agency also recognizes that in using the 1993 estimates for incidence of foodborne illness, the benefits analysis has not accounted for possible reductions in foodborne illness attributable to the rule that mandated safe handling statements on labeling of raw meat and poultry products. The rule mandating safe handling instructions became effective on May 27, 1994. Thus, it can be argued that the incidence of foodborne illness for 1994 through the present should reflect the effectiveness of the 1994 labeling requirement in reducing the incidence of illness.

FSIS is not aware of any quantitative evaluation of the effectiveness of safe handling labeling. Two recent surveys indicate a high level of awareness, but these surveys do not contain findings that can be translated into changes in consumer behavior. A recent Associated Press poll found that 9 in 10 Americans say they follow the safe-handling instructions. This poll, conducted in April 1996, included 1,019 randomly selected adults. This was a telephone survey conducted by ICR Survey Research Group. A November 1995 survey conducted by Wegman Food Markets in Buffalo, Rochester, and Syracuse found that 67.9 percent of respondents indicated they had read the safe handling information. The Wegman's survey found that most household meat preparers rely on color of meat or clarity of juices rather than temperature to determine when meat has been cooked thoroughly.

In this analysis, FSIS has not attempted to adjust the 1993 baseline to account for safe handling labeling. The potential effect of the 1994 regulation is one of many factors that could be affecting the current incidence or cost of illness. A May 1996 GAO study on foodborne illness notes that food safety and public health officials believe that the risk of foodborne illness is increasing. If they are correct, the 1994 labeling rule may be slowing the growth rather than reducing the absolute level.

There are many other factors that could have been incorporated into the baseline for the analysis such as population growth and increases in the cost of medical care. FSIS believes that attempts to adjust the cost of illness baseline to account for factors such as inflation, possible increases in foodborne illness due to behavior change or population increases, and possible decreases due to inventions such as safe handling labels are more likely to be misleading than informative given the level of uncertainly and wide range in existing estimates.

2. Cost of Foodborne Illness

The fourth column of Table 5 shows that the 1993 estimated cost of foodborne illness by pathogen or parasite was between $5.6 and $9.4 billion. These cost of illness estimates have been developed by ERS in conjunction with CDC over the past 15 years. As indicated in footnotes to Table 5, the results of that work have been frequently published in peer-reviewed journals.

There were only a few public comments on the proposed rule which addressed the methodology used for estimating the cost of foodborne illness. Some comments argued that the public health benefit estimates are low because of the low value-of-life factor used in the estimates for the cost of foodborne illness.

ERS intentionally used a conservative method to estimate the value of a statistical life (VOSL) acknowledging the controversy over valuing lives. ERS used Landefeld and Seskin's VOSL estimates and recognizes that the cost of illness estimates would be substantially higher if they used alternative methods. For example, Viscusi (1993) summarized the results of 24 principal labor market studies and found that the majority of the VOSL estimates lie between $3 million and $7 million per life. A survey of the wage-risk premium literature on the willingness to pay to prevent death concluded that reasonably consistent estimates of the value of a statistical life range from $1.6 million to $6.5 million dollars (1986 dollars) (Fisher et al. 1989). Updated to 1993 dollars using the change in average weekly earnings, Viscusi's range becomes $3.2 million to $7.6 million per VOSL and Fisher's range becomes $2.0 million to $10.4 million dollars for each statistical-life lost. Viscusi and the Fisher estimates are greater than the highest Landefeld-Seskin (LS) VOSL estimate of $1,584,605 in 1993 dollars (estimate for a 22 year old).

TABLE 4.—SOURCES OF DATA FOR SELECTED PATHOGENS, 1993

Pathogen	Estimated number of cases	Estimated number of deaths	Source(s) for case and death estimates	Percent foodborne	Source
Bacteria:					
Campylobacter jejuni or coli	2,500,000	200–730	Tauxe	55–70	Tauxe et al.
Clostridium perfringens	10,000	100	Bennett et al.	100	Bennett et al.
Escherichia coli O157:H7	10,000–20,000	200–500	AGA Conference	80	AGA Conf./CDC.
Listeria monocytogenes	1,795–1,860	445–510	Roberts and Pinner	85–95	Schuchat.

TABLE 4.—SOURCES OF DATA FOR SELECTED PATHOGENS, 1993—Continued

Pathogen	Estimated number of cases	Estimated number of deaths	Source(s) for case and death estimates	Percent foodborne	Source
Salmonella	800,000–4,000,000	800–4,000	Helmick et al./Bennett et al.	87–96	Bennett et al./Tauxe & Blake.
Staphylococcus aureus	8,900,000	7,120	Bennett et al	17	Bennett et al
Parasite:					
Toxoplasma gondii	4,111	82	Roberts et al.	50	Roberts et al.

Sources: American Gastroenterological Association Consensus Conference on E. coli O157:H7, Washington, DC, July 11–13, 1994. Bennett, J.V., S.D. Holmberg, M.F. Rogers, and S.L. Solomon. 1987. ''Infectious and Parasitic Diseases,'' In R.W. Amler and H.B. Dull (Eds.) *Closing the Gap: The Burden of Unnecessary Illness.* Oxford University Press, New York. Helmick, C.G., P.M. Griffin, D.G. Addiss, R.V. Tauxe, and D.D. Juranek. 1994. ''Infectious Diarrheas.'' In: Everheart, JE, ed. *Digestive Diseases in the United States: Epidemiology and Impact.* USDHHS, NIH, NIDDKD, NIH Pub. No. 94–1447, pp. 85–123, Wash, DC: USGPO.

Roberts, T., K.D. Murrell, and S. Marks. 1994. ''Economic Losses Caused by Foodborne Parasitic Diseases,'' *Parasitology Today.* vol. 10, no. 11: 419–423.

Schuchat, Anne, CDC, personal communication with T. Roberts at the FDA Science Forum on Regulatory Sciences, Washington, DC, September 29, 1994.

Tauxe, R.V., ''Epidemiology of Campylobacter jejuni infections in the United States and other Industrialized Nations.'' In Nachamkin, Blaser, Tompkins, ed. *Campylobacter jejuni: Current Status and Future Trends,* 1994, chapter 2, pages 9–19. Tauxe, R.V. and P.A. Blake, 1992. ''Salmonellosis'' Chap. 12. In: Public Health & Preventative Medicine, 13th ed. (Eds: Last JM: Wallace RB; Barrett-Conner E) Appleton & Lange, Norwalk, Connecticut, 266–268.

Tauxe, R.V., N. Hargrett-Bean, C.M. Patton, and I.K. Wachsmuth. 1988. ''Campylobacter Isolates in the United States, 1982–1986,'' *Morbidity and Mortality Weekly Report,* vol 31, no. SS–2: pages 1–14.

TABLE 5.—MEDICAL COSTS AND PRODUCTIVITY LOSSES ESTIMATED FOR SELECTED FOODBORNE PATHOGENS, 1993

Pathogen	Foodborne illness		Foodborne * costs (bil $)	Percent from meat/poultry (%)	Meat/poultry related		Total costs * meat/poultry (bil $)
	Est. No. of cases	Est. No. deaths			Est. No. of cases	Est. No. deaths	
Bacteria:							
Campylobacter jejuni or coli	1,375,000–1,750,000	110–511	0.6–1.0	75	1,031,250–1,312,500	83–383	0.5–0.8
Clostridium perfringens **	10,000	100	0.1	50	5,000	50	0.1
Escherichia coli 0157:H7	8,000–16,000	160–400	0.2–0.6	75	6,000–12,000	120–300	0.2–0.5
Listeria monocytogenes	1,526–1,767	378–485	0.2–0.3	50	763–884	189–243	0.1–0.2
Salmonella	696,000–3,840,000	696–3,840	0.6–3.5	50–75	348,000–2,880,000	348–2,880	0.3–2.6
Staphylococcus aureus **	1,513,000	1,210	1.2	50	756,500	605	0.6
Subtotal	3,603,526–7,130,767	2,654–6,546	2.9–6.7	N/A	2,147,513–4,966,884	1,395–4,461	1.8–4.8
Parasite:							
Toxoplasma gondii	2,056	41	2.7	100	2,056	41	2.7
Total	3,605,582–7,132,823	2,695–6,587	5.6–9.4	N/A	2,149,569–4,968,940	1,436–4,502	4.5–7.5

Source: ERS, 1993

* Column rounded to one decimal place.

** Roberts' rough approximation of costs in ''Human Illness Costs of Foodborne Bacteria'', *Amer. J. of Agricultural Economics*, vol. 71, no. 2 (May 1989) pp. 468–474 were updated to 1993 dollars using the Consumer Price Index (all items, annual average). Cost estimates for other pathogens are more detailed, see the following for a discussion of the methodology:

listeriosis—Roberts, Tanya and Robert Pinner, ''Economic Impact of Disease Caused by *Listeria monocytogenes*'' in *Foodborne Listeriosis* ed. by A.J. Miller, J.L. Smith, and G.A. Somkuti. Elsevier Science: Amsterdam, The Netherlands, 1990, pp. 137–149,

E. coli O157:H7—Roberts, T. and Marks, S., ''*E. coli* O157:H7 Ranks as the Fourth Most Costly Foodborne Disease,'' *FoodReview*, USDA/ERS, Sept-Dec 1993, pp. 51–59.

salmonellosis—Roberts, Tanya, ''Salmonellosis Control: Estimated Economic Costs,'' *Poultry Science*. Vol. 67 (June 1988) pp. 936–943,

campylobacteriosis—Morrison, Rosanna Mentzer, Tanya Roberts, and Lawrence Witucki, ''Irradiation of U.S. Poultry—Benefits, Costs, and Export Potential, *FoodReview*, Vol. 15, No. 3, October-December 1992, pp. 16–21, congenital toxoplasmosis—Roberts, T., K.D. Murrell, and S. Marks. 1944. ''Economic Losses Caused by Foodborne Parasitic Diseases,'' *Parasitology Today.* vol. 10, no. 11: 419–423; and Roberts, Tanya and J.K. Frenkel, ''Estimating Income Losses and Other Preventable Costs Caused by Congenital Toxoplasmosis in People in the United States,'' *J. of the Amer. Veterinary Medical Assoc.*, vol. 196, no. 2 (January 15, 1990) pages 249–256.

N/A indicates item is not-applicable.

ERS is currently working on a sensitivity analysis for their cost of illness estimates for foodborne illness. The sensitivity analysis replaces the LS VOSL estimates with estimates found in the literature on wage-risk studies. Preliminary findings show that the estimates of the total cost of foodborne illness will increase greatly when these higher VOSL estimates are used.

FSIS considers that the existing conservative estimates are appropriate considering the controversy and uncertainty. The conservative estimates are more than sufficient to justify the

final rule implementing a new HACCP-based regulatory program for meat and poultry. This final RIA uses the cost of illness estimates shown in Table 5.

Another comment stated that the cost of illness estimates are low because they do not account for increases in productivity. In response, the Agency notes that ERS used Landefeld and Seskin's estimates for the value of a statistical life, and those estimates do include an estimated 1% annual increase in productivity.

One commenter suggested that a methodology based on earning power may overestimate the value of life where many deaths from foodborne illness are the very elderly, the immunocompromised and the terminally ill. This commenter also noted that while all deaths are tragic, from a strictly economic standpoint many of these tragic cases have little or no productivity left and in fact are utilizing resources at the rate of $3,000 to $12,000 or more dollars per month of maintenance.

The cost of illness methodology used by ERS does account for the fact that older individuals have lower remaining earning power than younger individuals. This difference was taken into account when estimating the costs of lost productivity for *salmonellosis* patients. Different Landefeld and Seskin estimates of the values of statistical life were used for the different age categories. The methodology used U.S. death certificate data to estimate that the average age for patients who die from salmonellosis is over 65 years. The concept of a statistical value of life accounts for the fact that older individuals may continue to work or be retired or be patients under long term health care.

3. Percentage of Foodborne Illness and Cost of Foodborne Illness Attributable to Meat and Poultry

The fifth column of Table 5 includes estimates on the percentage of foodborne illness attributable to meat and poultry products. A separate estimate has been developed for each pathogen. These estimates are based on outbreak data reported under the CDC Foodborne Disease Outbreak Surveillance System and on data from community-based and other epidemiologic studies. Major data sources are cited in the preamble to the final rule. An assumption is made in this analysis that the source of foodborne pathogens, i.e., meat and poultry versus dairy products, seafood, vegetable, etc., has no effect on the cost of illness. The Department is not aware of any data indicating that the severity of foodborne illness cases varies by source of pathogens.

Comments noted that the Department had increased the percentage of foodborne illness attributable to meat and poultry from the earlier rulemaking for safe handling labels. One commenter stated that the Department has not revealed any new information which would support such an increase.

At this time, data on incidence of foodborne illnesses and the percentage of cases attributable to different food items are limited. Estimates by pathogen have been made by experts at CDC and USDA, based on a variety of studies. However, these are, indeed, estimates: FSIS does not have exact numbers. The estimates in the 1993 Federal Register document were relatively crude, assuming that 100% of *Campylobacter* and *E. coli* O157:H7 cases, 96% of *Salmonella* cases, and 85% of *Listeria* cases were foodborne, and that, for all bacterial pathogens, a flat 50% of foodborne cases were attributable to meat and poultry. The 1995 document looked at the numbers in a somewhat more sophisticated way, evaluating each pathogen individually and, where appropriate, giving ranges for, first, percentage of cases which were foodborne, and, secondly, percentage of cases which were attributable to meat and poultry. Nonetheless, when all of the various percentages are multiplied out, estimates of total cases attributable to meat and poultry were remarkably similar, as shown below in Table 6.

TABLE 6.—PERCENTAGE OF FOODBORNE ILLNESS ATTRIBUTABLE TO MEAT AND POULTRY

Pathogen	Percentage of total cases attributed to meat and poultry [a] 1993 (percent)	Percentage of total cases attributed to meat and poultry, 1995 (percent)	Estimated total cases, 1993	Estimated total cases, 1995
Campylobacter	50	41–53	1,050,000	1,031,250–1,312,500
Salmonella	48	43–72	921,600	348,000–2,880,000
E. coli O157:H7	50	60	3,834–10,22	46,000–12,000
Listeria	43	43–48	649–672	763–884

[a] Reflects percentage of foodborne multiplied by percentage attributable to meat and poultry.

Most other comments related to the estimates on the percentage of foodborne illness attributable to poultry. Comments questioned the high incidence of poultry-related foodborne illness when even, as a commenter asserted, public health authorities tell consumers that the problem with poultry meat is not due to consumption because poultry is cooked. Comments questioned whether cross-contamination in the kitchens could possibly generate such high levels of foodborne illness. Related comments suggested that if cross-contamination was such a serious problem, the data would show more outbreaks and fewer single cases. Other comments suggested that the cost of salmonellosis attributed to poultry was high because of the high incidence of *Salmonella enteritidis* in eggs and requested that the Agency exclude any foodborne illness costs associated with eggs, because those issues are outside the scope of this rulemaking. Another comment cited an Australian finding that the *Campylobacter* strains that infect chickens are not the strains that primarily infect humans.

The Department agrees that undercooked poultry is not a primary cause of foodborne illness. The preamble to the proposal stated that the majority of salmonellosis results from cross-contamination. The best available estimates for foodborne illness do suggest that a high incidence of illness is attributable to cross-contamination in kitchens—both household kitchens and food-service establishments.

The comment suggesting that cross-contamination would have led to more outbreaks makes sense, if the available estimates on incidence were heavily

based on outbreak data. However, as mentioned in the proposal, it is widely recognized that CDC outbreak data do not provide accurate estimates of foodborne disease incidence. The outbreak data are more useful in identifying factors that lead to illness and have been used to estimate proportions of illness attributable to specific food groups. They do not play a major role in the overall incidence estimates. The existing incidence estimates are for total cases including both individual cases and multiple cases. The methodology used does not distinguish between outbreaks and single cases. Just as there are unreported individual cases of foodborne illness, there are unreported cases where entire households or portions of households experience foodborne illness due to cross-contamination in household kitchens. As discussed above, the estimates of foodborne illness were derived from both CDC outbreak data and community-based epidemiologic studies.

The outbreak data (two or more individuals ill from the same source) are compiled by CDC from reports that are voluntarily submitted from state and local health authorities. The laboratory reporting system for *Salmonella* only captures information on those cases where a patient sees a doctor, the doctor collects a stool culture and sends the culture to a participating laboratory and the laboratory can perform the specific diagnostic test. The estimates for overall disease incidence are derived using both databases plus data collected from population-based studies in specific geographic areas. The current (initiative) collaborative surveillance project should improve the estimates in the future.

The comment referring to the Australian finding is referring to an article by Korolik, et al, published in the May 1995 issue of the Journal of Clinical Microbiology, entitled, ''Differentiation of *Campylobacter jejuni* and *Campylobacter coli* strains by Using Restriction Endonuclease DNA Profiles and DNA Fragment Polymorphisms.'' The study was undertaken to determine if DNA fingerprinting technologies could identify strains of *Campylobacter* in chickens that cause disease in humans.

FSIS reviewed the article and concluded that the study did not refute U.S. epidemiologic studies showing that approximately 50% of human *Campylobacter* infections are due to poultry. To confirm FSIS's interpretation of the study, a staff member contacted the author, Dr. Victoria Korolik, in Australia. She confirmed that her study does not shed doubt on the role of poultry in human *Campylobacter* infections.

4. Pathogens Addressed by the Rule

While the proposed rule indicated that HACCP systems will be designed to control all public health hazards, the preliminary benefits analysis assumed that the primary benefits will come from controlling the three most common enteric pathogens of animal origin: *Campylobacter jejuni/coli, E. coli* O157:H7, *Salmonella* and one environmental pathogen *Listeria monocytogenes*. Two other pathogens—*Clostridium perfringens* and *Staphylococcus aureus* primarily become or create hazards in meat and poultry products as prepared in restaurants, other commercial kitchens, and in homes. Consequently, the proposed regulatory program, which focuses on the manufacturing sector, will not significantly affect the presence of these organisms on meat and poultry products.

The public comments did not address the assumption that the proposed rule would have the most impact on the four pathogens identified above and that benefits would be most appropriately discussed in terms of reducing the level of these pathogens. This final RIA will continue to assume that the HACCP-based regulatory program will have the most impact on the four pathogens identified in the preliminary analysis.

The preliminary benefits analysis also included an assumption concerning the percentage of the four pathogens that contaminate the meat and poultry supply at inspected establishments or grow from contamination that occurs at inspected locations. Based on the expert judgment of FSIS microbiologists, the preliminary benefit analysis assumed that 90 percent of the four pathogens result from contamination that occurs at inspected establishments.

The public comments did not directly address the estimate that slaughter and processing establishments are the source of 90 percent of enteric pathogen contamination. There were, however, a large number of comments that cited studies or estimates that show or indicate that the majority of foodborne illness can be attributed to improper cooking, recontamination and other mishandling and abuse in the food service and home environment. Many comments cited data presented in the 1994 CAST Report which ''demonstrated'' that only 6.9 percent of outbreaks were ''attributable'' to the food processing establishments. Other comments referred to ''a well-recognized fact that 97 percent of the problems with foodborne illness occur outside the realm of state and federal inspection.'' Other comments attributed the 97 percent figure to a Special Report by the American Association of Meat Processors. These types of comments were presented in a manner indicating that the commenters believe that the data attributing ''cause'' to the food service or home environment directly contradicts the Agency's estimate that inspected establishments are the source of 90 percent of the four pathogens addressed by this rule.

In response, the Agency points out that the studies cited by commenters concluding that high percentages of foodborne illness are attributable to factors such as temperature abuse and mishandling do not conflict with either the assumption that slaughter and processing establishments are the source of 90 percent of enteric pathogen contamination or the assumption discussed later concerning the effectiveness of HACCP in reducing that contamination. Occurrence of foodborne disease is a multi-step process. The first, and critical, step is the introduction of a pathogen into or onto the raw product. If a pathogen is present, then subsequent temperature abuse or mishandling may permit bacterial counts to increase to levels which increase the likelihood that illness will occur; mishandling may result in cross-contamination of other foods which are not cooked before being eaten; or improper cooking may not kill all pathogenic bacteria present in the product. In these instances, it may be said that the illness was ''caused'' by improper handling. However, disease would not have occurred if the pathogen had not been present on the raw product in the first place.

The CAST study included a table showing factors contributing to the occurrence of 1,080 outbreaks occurring from 1973 to 1982. That table consisted of data from the CDC national foodborne disease surveillance system that was published in an article in the Journal of Food Protection by Frank L. Bryan in 1988. The CAST study and journal articles use terminology like ''factors that contribute'' and address the location or type of employee/consumer where any mishandling or mistreatment of food occurred. The focus of these studies is to enhance our understanding of the sequences of events and behaviors that lead to foodborne illness since behavioral modification for the food preparer and consumer at the end of the food chain may have the greatest impact on the incidence of foodborne disease. Many of the comments are written in a manner that blurs the distinction

between factors in the kitchen that may permit an outbreak to occur from slaughter-origin contamination and those that would have caused an outbreak despite the absence of contamination of the raw ingredients.

The comments referring to the CAST study or directly to CDC estimates have not interpreted the Foodborne Disease Outbreak Surveillance Data correctly. The standard CDC foodborne disease outbreak report form does not include a question about whether the food processing industry was involved, and while many foodborne outbreaks have a chain of causation, investigators may differ in their assessment of the point or points in the chain to which primary responsibility for occurrence of the outbreak should be assigned.

The Bryan article used for the CAST study had the following summary concerning the role of food processing establishments: ''Many of the animals that enter abattoirs are either infected or contaminated with foodborne pathogens and further spread occurs during processing. Hence, abattoirs and raw-product processing establishments must accept some of the blame of spreading salmonellae and other pathogens to many carcasses and pieces of meat. These products are major sources of pathogens for food-service establishments and homes where further abuse (e.g., inadequate cooking or cross contamination) leads to outbreaks of foodborne illness.''

The comments have not provided any basis for changing the expert judgment of FSIS microbiologists that inspected establishments are the source of 90 percent of the four pathogens addressed by the final rule. This final benefits analysis is based on this assumption.

5. Effectiveness of the Rule in Reducing Pathogens

In accordance with the assumption that meat and poultry establishments are the source of 90 percent of the four pathogens addressed by the rule, the preliminary analysis calculated the benefits under a scenario where the proposed rule would eliminate essentially 100 percent of those pathogens that enter the meat and poultry supply at inspected processing establishments. In other words, for the preliminary analysis, FSIS calculated an estimate of maximum benefits by assuming the rule would eliminate 100 percent of the 90 percent.

By assuming this scenario, FSIS was not predicting that it believed that the rule would result in elimination of 100 percent of those pathogens in the manufacturing sector. Rather, the Agency was acknowledging that it has responsibility for having a food safety objective that recognizes the scope of the problem and attempts to reduce pathogens in that sector as much as possible, since without pathogens, no amount of subsequent abuse would result in foodborne illness.

By presenting a sensitivity analysis in the proposal, FSIS intended to clarify that the benefit estimates were a maximum and not a prediction of what is likely to happen. The distinction was unclear to many commenters who expressed doubt that the proposed HACCP program would result in a 90 percent reduction in pathogens. A large number of comments on the potential effectiveness of HACCP programs contrasted the FSIS estimates with those contained in the recent study by the Institute of Food Science and Engineering, Texas A&M University, titled ''Reforming Meat and Poultry Inspection: Impacts of Policy Options,'' (hereafter referred to as the IFSE study). Both FSIS and IFSE estimates are useful as assumptions rather than as quantitative predictions of potential effectiveness of HACCP.

The ISFE study examined four policy options for addressing pathogens in the meat and poultry supply. One option called for mandatory HACCP for inspected slaughter and processing establishments and estimated that mandatory HACCP in inspected establishments would produce a 20 percent reduction in pathogens. The difference in the FSIS and IFSE estimates is not based on data but on assumptions for different ''HACCP'' scenarios.

The HACCP program scenario considered in the IFSE study did not assume a mandatory pathogen reduction performance standard. Requiring process control without a standard could lead to processes that are well controlled at unacceptable pathogen levels. The Agency would agree that such a situation would result in less pathogen reduction. FSIS believes that a standard is necessary to encourage innovation and provide the impetus for continuing improvement and increasing effectiveness. In estimating effectiveness, the IFSE study noted that ''with experience and additional research, it is possible that higher levels of reduction in pathogens could be achieved * * *''.

Another major difference between the two program scenarios is that the IFSE program does not include a prerequisite requirement for SOP's. SOP's could cover potential sources of enteric and environmental pathogens that are not be covered under a HACCP plan. However, as discussed in Section I, this analysis discusses benefits of SOP's in terms of increased productivity for inspection resources and clarity of responsibilities.

Several comments refer to the IFSE estimates as being more objective or ''scientific'' than those in the Agency's analysis. The IFSE authors characterize their own effectiveness estimates as ''the consensus judgment of the task force'' or ''the most reasonable expectation.'' The IFSE estimates are judgments, as are the Agency's estimates.

A general comment related to the effectiveness issue stated that while HACCP remains an interesting theoretical concept, it is still only a concept that has never been tested on a meaningful scale under actual meat establishment conditions, and never proven to significantly improve the microbial quality of the finished product. Although HACCP has been tested in food processing establishments to the satisfaction of scientists, food technologists, and industry management to produce safe food, the Agency recognizes that the potential effectiveness of HACCP in reducing pathogens within a regulatory framework is unknown at the present time. FSIS conducted a pilot HACCP study in nine establishments from 1991 to 1993. Findings regarding pathogen reduction effectiveness were inconclusive. FSIS did not receive any data during the comment period from establishments currently operating HACCP systems. Rather than select an arbitrary effectiveness estimate, or use the maximum potential 100 percent estimate from the preliminary analysis, this RIA will present a range of effectiveness estimates and show the minimum level necessary to generate net benefits.

6. Estimated Reduction in Cost of Foodborne Illness

Several comments focused on the issue that the relationship between pathogen reductions at the manufacturing stage and foodborne illness reductions is unknown. The comments recognize that the proposal did acknowledge that little data exist on the relationship between pathogen levels and incidence of illness. One comment pointed out that FSIS recognized that the pathogen testing requirements that are part of the proposal will help to elucidate the relationship between pathogen contamination and foodborne disease. The commenter concluded that it did not seem reasonable for the Agency to rely on an assumption, whose very validity can only be tested by the implementation of the proposal under examination, to justify the proposal.

Other commenters concluded that the Agency needed to develop better data or complete a thorough risk assessment that would establish the public health benefits of pathogen reduction before proceeding.

The comments asking for better data or requesting a thorough risk assessment are not comments on the cost-benefits analysis. These comments imply there is insufficient evidence to support new pathogen reduction efforts. This issue is addressed in the preamble to the final rule. The comments have made a policy judgment with which the Department does not agree.

For the benefits analysis included with the proposed rule, FSIS assumed that a reduction in pathogens will lead to a corresponding proportional reduction in foodborne illness. The Department notes that the IFSE study referred to favorably by many commenters used the same method for estimating public health benefits as did FSIS, i.e., a reduction in pathogens leads to a proportionate reduction in illness and death. The Agency is aware that the proportionate reduction method is an assumption that has not been tested or validated. However, the Agency also recognizes that research methodology for relating pathogen levels at establishments to incidence of illness is in its early developmental stages. Risk models for foodborne pathogens are likely to develop as the basis for regulatory decision-making in the future. The Agency believes the implementation of mandatory HACCP will improve food safety and protect public health while research in modeling risk associated with foodborne pathogens continues.

The Agency has and continues to support any effort to improve the quality of data and methodology available for risk assessment of illness caused by foodborne biological agents. FSIS, FDA, CDC, and local public health departments are collaborating with state health departments and local investigators at five locations nationwide to identify more accurately the incidence of foodborne illness, especially illness caused by *Salmonella* and *E. coli* O157:H7.

G. Summary

The final rule addresses four pathogens that are estimated to cause from $1.1 to $4.1 billion in annual illness and death costs attributable to meat and poultry products. The rule addresses 90 percent of that cost of illness or from $0.99 to $3.69 billion annually. FSIS recognizes that the actual effectiveness of the final requirements in reducing pathogens is unknown, and presents a range of benefits based on reducing varying percentages of the $0.99 to $3.69 billion in annual cost of foodborne illness addressed by this rule.

References

International Commission on Microbiological Specifications for Foods (ICMSF). 1980. *Microbial Ecology of Foods: Factors Affecting Life and Death of Microorganisms.* Volume I. Academic Press, New York. Pp. 215–231.

Rolfe, R.D. 1991. Population dynamics of the intestinal tract. In: *Colonization Control of Human Bacterial Enteropathogens in Poultry.* Ed. L.C. Blankenshipp, J.S. Bailey, N.A. Cox, S.E. Craven, R.J. Meinersmann, N.J. Stern. Academic Press, Inc., New York. Pp. 59–76.

Centers for Disease Control (CDC). 1988. Campylobacter isolates in the United States, 1982–1986. In: CDC Surveillance Summaries. June 1988. MMWR 1988; 37 (No. SS–2:1–13).

Blaser, M.J. & L.S. Newman. 1982. A review of human salmonellosis: I. Infective dose. Reviews of Infectious Disease. 4(6):1096–1106.

Buchanan, R.L. & R.C. Whiting. 1996. Risk assessment and predictive microbiology. J. Food Protection. 31–36.

Burmaster, D.E. & P.D. Anderson. 1994. Principles of good practice for the use of Monte Carlo techniques in human health and ecological risk assessments. Risk Analysis. 14(4):477–481.

Council for Agricultural Science and Technology (CAST). 1994. Foodborne pathogens: Risks and consequences, Report No. 122, p. 87.

Haas, C.N. 1983. Estimation of risk due to low doses of microorganisms: A comparison of alternative methodologies. Am. J. Epidemiol. 118:573–582.

National Research Council. 1983. Committee on Institutional Means for Assessment of Risks to Public Health. *Risk Assessment in the Federal Government: Managing the Process.* National Academy Press, Washington, DC p. 191.

Tappero, J.W. *et al.* 1995. Reduction in the Incidence of Human Listeriosis in the United States; Effectiveness of Prevention Efforts? Journal of the American Medical Association. 273(14):1118–1122.

Gellin, B., C.V. Broome, R. Weaver and A.W. Hightower. [Listeriosis Study Group.] Geographic Differences in Listeriosis in the U.S. (Abstract). In Program and Abstracts of the twenty-seventh International Conference on Antimicrobial Agents and Chemotherapy. p. 155. Washington, DC: American Society for Microbiology, 1987.

V. Cost Analysis

A. Introduction

The final HACCP rule includes several regulatory components all directed at improving process control in meat and poultry operations in order to reduce the risk of foodborne illness associated with meat and poultry products. The requirements of the final rule are organized around the following three sections:

- Requirements that all inspected establishments develop and implement sanitation Standard Operating Procedures (SOP's) within 6 months.
- Requirements that all inspected establishments develop and implement HACCP programs within the 18 to 42 month time period following publication. Scheduling will be based on establishment size.
- Requirements that (1) all establishments slaughtering cattle, swine, chickens, or turkeys, or producing a raw ground product from beef, pork, chicken or turkey comply with new pathogen reduction performance standards for *Salmonella* and (2) all establishments slaughtering cattle, swine, chicken or turkeys implement microbial testing programs using generic *E. coli* within 6 months. Compliance with the pathogen reduction performance standards for *Salmonella* will be required at the time the establishment is required to implement HACCP.

This cost analysis is presented in three sections. The first section describes the methodology used in generating cost estimates. The next section addresses the regulatory flexibility designed to reduce the burden on small business. The last section presents the cost estimates for each regulatory requirement. For each broad requirement, the discussion of the cost estimates is organized using the following five topics:

- Summary of the requirements in the final rule identifying any changes from the proposal.
- Review of the cost estimates from the preliminary RIA.
- Summary of the comments related to the preliminary cost estimates.
- Response to the comments.
- Final cost estimates.

B. Methodology for Cost Analysis

The final pathogen reduction/HACCP rule includes regulatory requirements that are directed at improving the control over food processing operations. In general, compliance with these requirements requires expenditures of time, i.e., employee hours to develop plans, monitor critical control points, record findings and collect and analyze samples. This final RIA is based on time required by four categories of employees that were defined in the supplemental cost analysis. These include the following:

- Quality Control manager earning $25.60 per hour.
- Supervisors or QC technicians that review findings and records at $18.13 per hour.

• Laboratory technicians earning $18.13 per hour.

• Establishment employees/production workers that would monitor sanitation and HACCP programs or collect samples at $12.87 per hour.

The four categories of wages are based on 1993 data adjusted for 1994 dollar inflation from the Bureau of Labor Statistics and *Meat and Poultry Magazine* and include a 33 percent overhead requirement for benefits such as health insurance and retirement contributions. Unless otherwise noted, the analysis assumes that all establishments and employees work a standard 52 week, 260 day, 2080 hour work year.

This final cost discussion is based on retracing the steps and/or calculations of the preliminary analysis and discussing related public comments in the appropriate sections. Other comments that are related to the analysis but do not reflect directly on the methodology are summarized at the end of the analysis in Appendix A.

This analysis makes frequent references to the Enhanced Economic Database. In 1994, the Research Triangle Institute (RTI) took a compilation of existing FSIS databases containing establishment production or inspection data and added data on annual sales and employment from sources that included Dun and Bradstreet and American Business List databases. Actual estimates for annual sales and number of employees were available for approximately 80 percent of the establishments. In other cases, estimates for sales and number of employees were developed using the employment/sales data for establishments producing the same type and volume of product.

The enhanced database includes production data (number of head slaughtered, pounds of product produced) from 1993 for all federally-inspected establishments in operation as of August 1994. The preliminary analysis and this final RIA combine 1993 production data with the population of federally and state-inspected establishments that were in operation as of August 1994. As of August 1994, there were 6,186 federally inspected and 2,893 state inspected establishments. These 9,079 establishments include a total of 11,719 ''operations''—2,597 red meat slaughter operations, 364 poultry slaughter operations and 8,758 further processing operations.

This final analysis assumes a constant level of 9,079 inspected establishments. The analysis does not attempt to account for costs associated with exits from or entries into the marketplace. For operations that are entirely new, or include a new processing operation, the requirements for HACCP plans and sanitation SOPs will increase the one-time, up-front cost of entering the market. If marketplace entry involves the purchase of an existing business, the business will already have an existing HACCP plan and sanitation SOP. In these cases, the acquisition cost of the business would include the value of the existing HACCP plan and SOP.

There should be minimal additional cost for HACCP and SOP plan development for new construction that expands a firm by replicating an existing operation in a new location. This type of new establishment can apply HACCP and SOP plans that have been developed for a similar existing establishment. This analysis has assumed that each establishment is independent and has not reduced cost estimates to account for firms that operate several similar establishments.

The preliminary analysis developed cost estimates for three sizes of manufacturing establishments. Most of the costs that involve employee time are influenced by a number of factors including the physical size of the establishment, the volume of production, the type of production practices and the number or production lines. The preliminary analysis used the data on annual sales developed by RTI because the sales data correlated reasonably well with size and production volume data and the Agency had an estimate of sales for 6,186 federally inspected establishments.

For the preliminary analysis the Agency defined a large establishment as one with over $50 million in annual sales, a medium establishment as one with between $2.5 and $50 million and a small establishment as one with less than $2.5 million in annual sales. For calculating costs, the Agency collected data from the field based on these three size categories. Public comments provided good reason to change size definitions for implementation (regulatory flexibility) purposes and the Agency has done so for the final rule. This does not affect the accuracy of proposed or current cost estimates based on previously collected data. The final analysis uses the old categories for presenting cost data to facilitate comparisons and minimize confusion. To summarize, this cost analysis uses the terms high, medium and low volume producers for cost presentation that involves average establishment costs and uses the terms large, small and very small business for discussing regulatory flexibility. The cost and flexibility principles do not overlap in this analysis.

Commenters pointed out that in comparing total costs with the value of current production, the preliminary analysis did not address impacts on producers, i.e., the costs that would be passed back to livestock producers. FSIS recognizes that some costs will be passed back to producers in terms of lower prices for live animals and other costs will be passed forward in terms of higher consumer prices. Other costs may have to be absorbed by slaughter and processing establishments. Because the necessary knowledge of empirical cost structures and supply and demand elasticities is inadequate, FSIS does not offer any quantitative estimates of the distribution of costs of this rule on various sectors of the production and marketing chain. The aggregate cost estimate establishes an upper bound on the costs any sector might ultimately bear.

There are two types of potential costs that were not addressed in the preliminary cost analysis. The first type of cost is the cost of taking corrective action when routine monitoring of a CCP finds a deviation from a critical limit. The critical limit could be associated with assuring compliance with existing regulatory requirements or it could be a limit set to assure compliance with the new pathogen reduction standards for *Salmonella* or the criteria established for generic *E. coli*. Corrective action would also occur when FSIS would find a problem with either a HACCP plan or a sanitation SOP.

The second type of potential cost is related to the question of whether existing processing methods are adequate to meet the pathogen reduction performance standards for *Salmonella* and the criteria for generic *E. coli*. It is expected that some establishments will have to make permanent changes to their existing production practices to have a HACCP-based program that assures compliance with the new standards and criteria. The final rule raises a third type of potential cost when it outlines the Agency's plans for using the results of its own *Salmonella* testing program for regulatory purposes. Whether or not this testing leads to industry testing costs depends on whether the government testing indirectly forces an establishment to regularly conduct its own testing.

The preliminary analysis did address a fourth category of potential costs that includes the cost of necessary materials, such as thermometers and test kits, that establishments will need to

systematically monitor their processes. Recognizing that the rule does not make any equipment obsolete, the preliminary analysis suggested costs of from $10 to $20 per establishment. These costs were not included in the overall cost summary.

Potential costs are addressed in this final analysis under Section V.D.2., Costs of Meeting Pathogen Reduction and Microbial Sampling Requirements.

C. Regulatory Flexibility

The Regulatory Flexibility Act (P.L. 96–354) requires analyzing options for regulatory relief for small businesses. This section reviews the regulatory relief provided in the proposal, responds to comments related to the definition of small business used in the proposal and summarizes the regulatory relief for small business provided for in the final rule. In Section II, this analysis addressed the option of providing an exemption for small business noting that comments on an exemption were mixed with a substantial number of comments from small businesses strongly opposing an exemption.

The proposed rule intended to spread the implementation of HACCP over a three year period. To minimize the burden on small establishments, they would be given a maximum time of 36 months to develop and implement their HACCP plans. A small establishment was defined as one with annual sales of less than $2.5 million.

The decision to use the above definition generated a large number of comments. ''Very small'' establishments commented that they could not compete with a relatively ''large'' business with annual sales of $2.5 million. For example one commenter stated that: ''calling an establishment, small, that produces $2,500,000 worth of product annually is not fair to those establishments producing far less.'' Other comments suggested that by defining small at the $2.5 million level, the Agency demonstrated that it does not understand what a small business is. Comments from businesses with annual sales of $2.5 to $10.0 million or even $25.0 million stated that they should also be considered small businesses. Commenters also pointed out that other Federal agencies use different definitions. For example, one commenter noted that OSHA uses 50 employees as their criterion for a ''small business.'' Others commented that FSIS should or must use the existing definition of fewer than 500 employees published by the Small Business Administration (SBA).

Several comments promoted a set of requirements distinguishing ''small'' from ''very small'' establishments. ''Very small'' establishments would only be required to implement the proposed provisions on sanitation standard operating procedures, antimicrobial treatment of carcasses, and time and temperature provisions. They would be exempt from routine microbial testing and long-term provisions of HACCP as long as annual sales do not exceed $1 million (not counting ''pass through''). The establishments would still be subject to incidental sampling for microbial testing as determined by the Administrator. Required implementation of the three near-term initiatives would be 12 months after publication of the final rule.

The ''small'' establishments (between $1.0 and $2.5 million) would be required to implement SOPs, antimicrobial treatment, time and temperature provisions, and limited routine sampling, in proportion to the number of slaughtered animals and/or poundage of processed products. The establishments would still be subject to incidental sampling for microbial testing as determined by the Administrator. They would be exempt from long-term provisions of HACCP as long as annual sales, as defined above, do not exceed $2.5 million. The required implementation of all near-term initiatives would be six months.

There were other comments that suggested variations on the above definitions and requirements for ''small'' and ''very small'' establishments. For example, one State department of agriculture recommended the same requirements for ''small'' and ''very small'' establishments but suggested that size criteria based on head slaughtered or pounds produced would be more practical. Another State department of agriculture recommended that a ''every small'' plant be defined based on the number of employees (no more than 20 full-time), slaughter volume (no more than 2,500 animals per year), or processing volume (100,000 pounds of meat and/or poultry products per year). The recommendation suggested that a plant in this category would be required to implement the provisions of the proposed rule pertaining to sanitation SOP's and time-temperature requirements. Antimicrobial treatment of carcasses would be voluntary, and such a plant would be exempted from microbial testing as proposed. Implementation of a HACCP program would be initially voluntary, and phased in with considerations in the areas of documentation and record-keeping for the limited work force.

FSIS has considered the above regulatory framework for ''small'' and ''very small'' establishments. Some of the suggestions are no longer applicable because major provisions of the proposed rule have been dropped. FSIS believes it has addressed the other concerns in more appropriate ways.

FSIS was aware of SBA Size Standards during the development of the proposed rule. If FSIS used the size standard for meat and poultry ''manufacturing'' firms, over 94 percent of the federally inspected establishments would meet the criterion of having fewer than 500 employees. FSIS is also aware that there are six different SBA size standards that apply to the 6,415 FSIS official establishments. FSIS determined the SBA size standards by themselves are not appropriate for meeting FSIS's need to sequence HACCP implementation.

Table 7 shows the distribution of 6,415 official establishments by Standard Industrial Classification (SIC) code. The SIC codes were developed to promote the comparability of statistics describing various facets of the Nation's economy. The SIC codes were used as part of the Enhanced Economic Analysis Database developed by Research Triangle Institute to represent all FSIS inspected establishments. As can be seen from Table 7, a significant portion of official establishments are not in an SIC Code for manufacturing. Food manufacturing establishments have a 4-digit SIC Code beginning with 20. The Census of Manufacturers published by the Department of Commerce characterizes the meat and poultry manufacturing industry by summarizing data for SIC Code 2011—Meat Packing Establishments, SIC Code 2013—Sausages and Other Prepared Meats, and SIC Code 2015—Poultry Slaughtering and Processing. The SBA Size Standards in Table 7 are published in the Code of Federal Regulations—13 CFR, Chapter 1, Section 121.601.

In a written comment, the Office of Advocacy, Small Business Administration claimed that FSIS was wrong in concluding that one-third of federally inspected establishments would have the maximum time for compliance with HACCP requirements using the criterion of $2.5 million in annual sales. In supporting their claim, they cited U.S. Census Bureau data. However, Census data do not accurately describe the federally inspected meat and poultry industry. As shown in Table 7, the problem is that less than half of the firms are classified in the three 4-digit SIC Codes identified above that define meat and poultry manufacturing. FSIS addressed this data

problem by contracting with RTI to develop a more accurate economic profile of federally inspected meat and poultry establishments.

TABLE 7.—ESTABLISHMENTS STANDARD INDUSTRIAL CLASSIFICATION

SIC code	Standard industrial classification	Number of establishments	Cumulative number of establishments	SBA size standard
2011 ...	Meat packing establishments	1,503	1,503	500 employees.
5147 ...	Meats and meat products	1,312	2,815	100 employees.
2013 ...	Sausages and other prepared meats	939	3,754	500 employees.
2015 ...	Poultry slaughtering and processing	438	4,192	500 employees.
4222 ...	Refrigerated warehousing and storage	356	4,548	$18,500,000.
5421 ...	Meat and fish markets	309	4,857	$5,000,000.
5144 ...	Poultry and poultry products	268	5,125	100 employees.
5141 ...	Groceries, general line	238	5,363	100 employees.
5812 ...	Eating places	156	5,519	$5,000,000.
2038 ...	Frozen specialities, nec	139	5,658	500 employees.
5142 ...	Packaged frozen foods	130	5,788	100 employees.
5411 ...	Grocery stores	95	5,883	$20,000,000.
5149 ...	Groceries and related products, nec	65	5,948	100 employees.
9999 ...	Not applicable	63	6,011	
2032 ...	Canned specialities	61	6,072	1,000 employees.
2099 ...	Food preparations, nec	55	6,127	500 employees.
Other	All other SIC codes	288	6,415	

Note: The Enhanced Economic Analysis Database uses the number of active establishments as of August, 1994 and identified 6,415 establishments as active official establishments. Of these 6,415, a total of 229 were identified as cold storage/ID warehouses, universities or churches. From the 6,415 total, 6,186 federal establishments were classified as processing, slaughter or combination operations. nec—(Not Elsewhere Classified).

The final rule provides for sequencing HACCP implementation by establishment size, using the SBA definition of a small manufacturing business, i.e., a small business is an establishment with fewer than 500 employees. Those establishments with 500 or more employees will be referred to as large establishments. In addition, in response to comments that there are hundreds of ''very small'' or ''micro'' establishments, the Agency will classify an establishment as ''very small'' if it has either fewer than 10 employees or annual sales of less than $2.5 million.

This sequencing of HACCP responds to a large number of comments requesting that small businesses be given a longer period of time to implement HACCP requirements. Many small businesses stated they did not want to be exempt, but asked for more flexibility in implementing HACCP. Some commenters specifically requested five, eight or 10 years to implement HACCP.

While the final rule does not provide for longer periods of five, eight or 10 years, it does substantially extend the implementation period for hundreds of small and very small establishments.

To illustrate, the proposed rule would have required HACCP plans in over 2,100 establishments producing raw ground product within 12 months. Under the final rule, over 1,800 of those establishments will have either 30 or 42 months to implement HACCP. The smallest 5,127 establishments (2,893 state and 2,234 federal) will have an additional six months. The proposed rule called for implementation of a HACCP system in all ''small'' establishments by 36 months; the final rule allows 42 months for the newly defined ''very small'' category.

Table 8 illustrates the distribution of 6,186 federally-inspected slaughter, processing, and combination establishments used for the sequencing of HACCP implementation in the proposed rule and in the final rule. There are 496 more establishments in the two smaller categories than there were in the proposal. As shown in Table 8, there are 353 large, 2,941 small and 2,892 very small federally-inspected establishments.

TABLE 8.—SIZE CATEGORIES FOR FEDERALLY INSPECTED ESTABLISHMENTS

Establishment category	Definition	No. of establishments
Proposed Rule		
High volume	>$50 million	849
Medium volume	$2.5–$50 million.	3,103
Low volume	<$2.5 million.	2,234
Total		6,186

TABLE 8.—SIZE CATEGORIES FOR FEDERALLY INSPECTED ESTABLISHMENTS—Continued

Establishment category	Definition	No. of establishments
Final Rule (Sequencing of HACCP)		
Large	≥500 Employees.	353
Small [a]	10–499 Employees.	2,941
Very small [b]	<10 Employees or <$2.5 Million.	2,892
Total		6,186

[a] New definition of small includes 2,445 establishments that were medium volume establishments plus 496 that were high volume for the preliminary analysis.

[b] New definition of very small includes the 2,234 establishments that were low volume establishments plus 658 that were medium volume establishments for the preliminary analysis.

D. Final Cost Estimates

1. Sanitation Standard Operating Procedures

a. Summary of Requirements. The final rule requires that all inspected establishments develop and implement Sanitation SOP's within 6 months after publication of the final rule. The proposed rule would have required the implementation of SOP's within 90

days. To facilitate the development of SOP's and to provide maximum flexibility, the Agency will not prescribe any specific format or content but will provide guidelines to assist inspected establishments in developing written SOP's. There will not be any FSIS approval of the written documents. With the exception of the implementation schedule, the requirements for SOP's in the final rule are the same as those in the proposed rule.

b. Review of Preliminary Cost Estimates. The preliminary cost analysis identified separate costs for SOP plan development and SOP recordkeeping where recordkeeping was defined as observing or verifying procedures, recording findings, reviewing records and maintaining files. FSIS assumed that the Sanitation SOP's would be developed by a quality control manager at a cost of $25.60 per hour. FSIS estimated that it would cost an average of $128, $256 and $640 for low, medium and high volume establishments to develop Sanitation SOP's.

The preliminary cost analysis assumed that Sanitation SOP's observation and recording for low, medium and high volume establishments would take 15, 25 and 45 minutes per day by an employee earning $12.87 per hour and that supervisory review of records would take 5, 10, and 20 minutes by an employee earning $18.13 per hour. In developing these time estimates for recording and reviewing records, FSIS recognized that the time required would be influenced by a number of factors including the physical size of the establishment, the volume of production, the type of production practices and the number of production lines. The estimates are based on program judgement of the time required to conduct two sets of sanitation observations per day, one for preoperational sanitation procedures and one for operational sanitation.

Using the above inputs, the annual costs for recording and reviewing Sanitation SOP's records for low, medium and high volume establishments would be approximately $1,230, $2,180 and $4,080, respectively, based on a 260-day, 2,080 hour work year. These costs were adjusted upward to approximately $1,242, $2,204 and $4,104 to account for the cost of maintaining records.

The preliminary analysis also included training costs of $62, $155 and $372 for low, medium and high volume establishments. Instructing an employee in verification and recording procedures was assumed to take 2, 5 and 12 hours, respectively involving both a QC technician ($18.13 per hour) and a production worker ($12.87 per hour). Total training cost was, therefore, $31 per hour. Total per establishment Sanitation SOP's costs, as estimated in the preliminary analysis, are summarized in Table 9.

TABLE 9.—SUMMARY OF SANITATION SOP COSTS PER ESTABLISHMENT

[Dollars]

Establishment category	Plan development cost	Annual recordkeeping cost	Training cost	Total first year cost	Recurring annual cost
Low	128	1,242	62	1,432	1,242
Medium	256	2,204	155	2,615	2,204
High	640	4,104	372	5,116	4,104

Using the per establishment costs from Table 9, total aggregate costs were calculated for all inspected establishments as shown in Table 10. Establishments with an existing written sanitation program were assumed to have only 50 percent of the plan development costs because these establishments would have to modify an existing plan rather than start from the beginning. Establishments with existing sanitation plans include the 287 establishments with TQC programs and 46 slaughter establishments with PQC sanitation programs. It was also assumed that these 333 establishments would not require training to implement a sanitation SOP.

TABLE 10.—COSTS OF SANITATION SOP'S

[Dollars in thousands]

Establishment category	No. of establishments	First year costs	Recurring costs
High	849	$4,276	$3,484
Medium	3,103	8,079	6,839

TABLE 10.—COSTS OF SANITATION SOP'S—Continued

[Dollars in thousands]

Establishment category	No. of establishments	First year costs	Recurring costs
Low	2,234	3,185	2,775
Subtotal	6,186	15,540	13,098
State	2,893	4,143	3,593
Total	9,079	19,683	16,691

Note: For preliminary RIA, all State establishments were assumed to be low volume establishments.

c. Comments on Preliminary RIA. Comments on proposed requirements for sanitation Standard Operating Procedures (Sanitation SOP's) focused on the cost of recordkeeping. In the preliminary cost analysis, recordkeeping included observation (i.e., verifying the procedures), recording findings, supervisory review of records and maintenance of files. One commenter stated that the cost of recordkeeping for their company would be approximately $10,000 annually.

A state inspected establishment, currently participating as a pilot establishment for HACCP/sanitation plans in their state program, indicated that they spend several hours each week verifying procedures and have weekly costs of at least $50 to keep the paperwork for their sanitation plan current. Their annual cost for keeping paperwork current would, therefore, be at least $2,600. This state establishment also stated that they had used an estimated $3,000 to $4,000 designing an SOP and that was with the assistance of two universities, several suppliers and their state inspection program. It took nine months to put the plan together.

Comments at public hearings indicate that there is a lot of uncertainty as to what FSIS expects in Sanitation SOP's. At one of the public hearings the owner of a ''small'' establishment stressed the importance of guidance and training with respect to what is expected in terms of recordkeeping.

d. Response to Comments.

The Agency recognizes that the costs reported by the state establishment participating in a pilot program are substantially higher than the costs used in the preliminary analysis. The reported development time of nine months is also longer than the allowed implementation period. FSIS believes that the reported pilot project involving two universities, several suppliers and a state program has far exceeded the expectations of the rule. The same is true for the comment suggesting recordkeeping costs of $10,000 per year.

FSIS has now developed model Sanitation SOP's and a guideline for developing Sanitation SOP's. These documents should clarify FSIS expectations. FSIS believes that these documents are consistent with the cost estimates used in the preliminary analysis.

There is some reason to believe that the estimated cost for Sanitation SOP's in the preliminary analysis is conservative, that is, a possible overstatement of costs. Whether the costs associated with Sanitation SOP's are totally new or just how they may be modified over time can only be determined in individual establishment situations. For example, task verification and recordkeeping are costs that can be reduced through efficient management and allocation of resources and should decrease with experience. In many cases the tasks can be integrated with current duties.

For many establishments, the cost of Sanitation SOP's should be offset by changes in the approach to sanitation. Under current procedures, slaughter operations can not begin until inspection personnel have given their approval. Under the new procedures all establishments will be able to commence daily operations without USDA approval upon successful completion of the preoperational portion of their Sanitation SOP. When operational sanitation problems are identified, corrected and documented as they occur by the establishment, establishment officials will spend less time interacting with inspectors or responding to inspection findings. For example, federally inspected establishments currently provide written responses to approximately 700,000 to 800,000 Processing Deficiency Records (PDRs) per year. Over 70 percent of these PDRs are for sanitation deficiencies.

Finally, while FSIS recognizes that keeping sanitation records will be a new task, FSIS does not necessarily view the time spent verifying sanitation procedures as a new regulatory cost. FSIS is not changing any sanitation requirements. It is also true that FSIS has had an ongoing problem getting all establishments to comply with existing sanitation requirements. It can, therefore, be argued that some establishments have not conducted the necessary verification to assure compliance with existing regulations or have used FSIS employees to conduct sanitation verification.

e. Final Cost Estimates. After considering the comments, FSIS does not see a need to adjust the cost estimates shown in Tables 9 and 10. The final aggregate cost estimates for SOP's are those shown in Table 10. The costs in Table 10 assume that the requirement for SOP's does not lead to new compliance costs associated with new regulatory obligations apart from paperwork and recordkeeping. The analysis assumes that satisfactory sanitation is achieved one way or another under current procedures and that the changes that will occur with SOP's have more to do with issues of responsibility and efficient use of inspection resources. It follows that, for the most part, this provision of the rule will have no direct effect on the rate, extent or severity of pathogenic contamination, and thus will also have no effect on the rate, extent, or severity of foodborne illness. This is not saying there will be no change in establishment or employee conduct. In fact, FSIS expects to see more sanitation activities conducted at the firm's initiative rather than following inspection findings.

2. Costs of Meeting Pathogen Reduction and Microbial Sampling Requirements

a. Summary of Requirements. The final rule implementing HACCP-based programs establishes pathogen reduction performance standards for *Salmonella.* The rule both establishes the standards and defines the procedures the Agency will use to measure and assure compliance with the standards. The rule does not specify a minimum testing requirement for *Salmonella.* The pathogen reduction performance standards apply to an estimated 5,522 inspected establishments, 2,682 establishments that slaughter cattle, hogs, chicken or turkeys and another 2,840 establishments that do not slaughter, but produce raw ground product from beef, pork, chicken or turkey. If an establishment slaughters two species, e.g. cattle and hogs, the establishment would be subject to the standards for both cattle and hogs. The Agency's testing program would, however, be directed at the predominant species. If an establishment both slaughters and processes a raw ground product from that same species, the Agency will test the ground product. If an establishment produces more than one variety of ground product, the Agency intends to sample each.

The proposed rule included the same standards but contained a different approach for enforcement. The proposed rule included the requirement that each of the 5,522 affected establishments would collect and analyze one sample for each species or variety of raw ground product for *Salmonella* on a daily basis. The establishments would maintain records from these tests that would be reviewed by inspection program personnel to determine compliance. The proposed rule did not include a discussion of how the Agency would use the test results in a program for regulatory enforcement.

Under the proposal, the results from each establishment's *Salmonella* testing program were also to be used as a measure of process control. This final rule requires that all 2,682 slaughter establishments implement sampling programs using generic *E. coli* as a measure of process control for slaughter and sanitary dressing procedures.

b. Review of Preliminary Cost Estimates. As discussed earlier under methodology, the preliminary RIA did not attempt to analyze the overall impact of complying with the new pathogen reduction standards. The preliminary RIA did include a detailed analysis of the costs associated with the requirement that slaughter and raw ground processing establishments collect and analyze samples for *Salmonella* on a daily basis. The laboratory analysis required only a positive-negative finding, i.e., the proposed rule did not require the analysis necessary to determine the number of bacteria present in the sample. The cost of meeting the proposed requirement would vary depending on whether or not the establishment had an inhouse laboratory. It was assumed that approximately 20 percent of samples would be collected in establishments with in-house laboratories. For an establishment without a laboratory the total cost for each sample was estimated as shown in Table 11.

TABLE 11.—COST OF A SALMONELLA SAMPLE ANALYSIS FOR ESTABLISHMENTS WITH NO IN-HOUSE LABORATORY

(Dollars)

Component	Cost
Average Private Laboratory Cost	22.60
Shipping	7.00

TABLE 11.—COST OF A SALMONELLA SAMPLE ANALYSIS FOR ESTABLISHMENTS WITH NO IN-HOUSE LABORATORY—Continued

(Dollars)

Component	Cost
Collecting and Packaging	3.75
Total	33.35

The establishment without an in-house laboratory would also be required to train an individual to perform aseptic sampling. The cost components for a *Salmonella* test at an in-house laboratory were estimated for the preliminary RIA as shown in Table 12.

TABLE 12.—COST OF A SALMONELLA SAMPLE ANALYSIS FOR ESTABLISHMENTS WITH AN IN-HOUSE LABORATORY

[Dollars]

Component	Cost
Laboratory Supplies	5.90
Collecting and Preparing Sample	5.28
Laboratory Analysis (0.5 hours at $18.13 per hour)	9.07
Total	20.25

Since the requirements in the final rule have changed substantially, this section will present only a brief summary of what was a relatively complex analysis to estimate the total industry sampling costs associated with the proposed requirements. The costs associated with the proposed *Salmonella* testing requirement are summarized in Tables 13 and 14. Table 13 shows the different cost components.

TABLE 13.—COMPONENT COSTS FOR MICROBIAL SAMPLING AS PROPOSED

[$ Thousands]

Establishment category	Training for aseptic sampling	Sampling plan development	Sample collection and analysis	Recording and review time
High	10	508	5,267	242
Medium	514	1,473	20,555	887
Low	604	959	18,624	606
Subtotal	1,128	2,939	44,446	1,735
State	998	1,588	21,150	688
Total	2,126	4,527	65,597	2,423

TABLE 14.—AGGREGATE COSTS OF MICROBIAL SAMPLING AS PROPOSED

[$ Thousands]

Establishment category	Number of raw product operations	First year costs	Recurring costs
High	793	6,027	5,509
Medium	2,301	23,429	21,443
Low	1,498	20,792	19,230
Subtotal	4,592	50,248	46,181
State	2,481	24,424	21,838
Total	7,073	74,672	68,020

Note: All state establishments were assumed to be low volume producers. Columns may not add to totals due to rounding.

Table 14 summarizes the first year and annual recurring costs. Training and sampling plan development costs are one-time first year costs. Sample analysis and recording costs are both recurring annual costs. The following notations help characterize the estimated costs from the preliminary analysis:

- Training and plan development costs were based on a total of 7,073 raw product operations. This total is based on a count of meat slaughter, poultry slaughter and raw ground processing operations. Sample collection and analysis and recording and record review costs were based on a count of 8,329 species-specific operations, i.e., the total of beef slaughter, pork slaughter, raw ground processing, etc. Thus, an establishment with beef slaughter, pork slaughter and raw ground processing would count as two operations for training and plan development, but three operations for sampling and recordkeeping.
- The proposed requirement of one sample per day per species resulted in low volume federal establishments and state establishments accounting for over 60 percent of the estimated first year costs (See Table 14).
- The analysis underestimated costs in that with existing data it was necessary to assume that the 3,029 establishments with raw ground product operations produced only one product. The proposal would have required 2 samples per day if an establishment produced both raw ground beef and raw ground pork on a daily basis.
- The analysis overestimated costs in that it counted operations for minor species or kind (e.g. sheep and goats). The proposal did not cover sheep, goats, equine, ducks, geese, etc.
- The analysis overestimated costs in that it assumed that every establishment

with multiple operations was running each operation every day (260 days per year).

• Each of the 7,073 operations would require a sampling plan—25 hours for a QC manager at $25.60 per hour for a total of $640 per plan. At $640 per plan, 7,073 plans totaled $4.53 million as shown in Table 13.

• The analysis assumed that 5,275 (approximately 75 percent) of the 7,073 operations would have to train an individual to perform aseptic sampling. The total of 5,275 includes all 1,498 low volume raw operations, 1,275 (55.4%) of the 2,301 medium volume raw operations, 25 (3.2%) of the 793 high volume operations and 2,477 (99.8%) of the State inspected raw product operations. Training was estimated at $403 per operation—8 hours with a trainer at $37.50 per hour and a trainee at $12.87 per hour. Training for 5,275 operations at $403 per operation would cost $2.13 million as shown in Table 13.

• Recording and review time was estimated at 5 minutes per day for each of the 8,329 species-specific operations. Five minutes per day equals approximately 21.7 hours per year or an average of approximately $291 per year per operation based on wages of $18.13 and $12.87 per year (average of $13.43). The total is $2.42 million as shown in Table 13. Since the requirement was one sample per day per species, the cost estimates could also be viewed as 5 minutes per sample.

c. Comments on the Preliminary RIA. Similar to the preliminary analysis, the public comments focused on the cost of required *Salmonella* sampling and did not address the overall impact of meeting the proposed pathogen reduction performance standards for *Salmonella.* The proposed regulation would have required daily sampling for each species or kind slaughtered and each type (meat or poultry) of raw ground product per establishment per day. Comments from individual establishments indicated that some small establishments could be required to take 5 or more samples per day. A ''small'' establishment currently slaughtering three different species (beef, swine and lamb) and producing multiple raw ground products estimated they would need approximately 2,200 samples per year at a cost of approximately $77,000 per year. That is over eight per day based on a 260 day work year. A ''small'' ground meat processing establishment estimated they would need over 500 samples from approximately 350,000 pounds of annual production.

Several comments from ''small'' establishments pointed out that the proposed sampling program placed a disproportionate burden on small establishments from two perspectives. First, ''small'' establishments have less production over which to spread the cost of sampling. Second, smaller establishments tend to be the ones that slaughter more species or kind and produce more varieties of raw ground product. Other comments pointed out that the proposed *Salmonella* testing would not provide a good procedure to validate process control.

There were also comments that referred to the cost of the product that is lost or damaged during sample collection. A turkey processor noted that the value of a 40 pound tom is $63.60 at wholesale price. The same comment pointed out that shipping costs could be very high, especially if next day service is required.

Several comments noted that the IFSE study estimated costs for microbiological testing that were far higher than the cost estimates provided by FSIS. Another commenter noted that microbiological testing is being proposed to correct a deficiency of an inspection system that is currently unable to detect microbial contamination of meat. If mandatory inspection is a federally funded program, why not the ''correction'' of the system?

Most of the comments referred to the cost of the proposed requirement and were not comments on the methodology used to determine costs in the preliminary analysis. One comment that did address the cost methodology had calculated the cost of a *Salmonella* test at $38.00 to $44.50 per test where FSIS used a cost of approximately $33.00 to $34.00. There was some confusion concerning the proposed requirements. Some comments indicated the establishments believed that they would have to test every product line. Other comments based estimates on a far costlier test for *Salmonella* indicating they assumed the test would require information concerning the number of bacteria present, not just a positive-negative result.

There were also comments that suggested that FSIS has overestimated the cost of microbial sampling because, as the amount of laboratory analysis increases, the cost per sample will probably decrease. Other commenters pointed out that demand will lead to simpler and less costly new methods development.

d. Response to Comments. The changes in the final rule eliminate the issues raised by most of the comments. The comments concerning the burden on ''small'' establishments made a convincing argument that ''small'' establishments could not afford to implement the microbial sampling program as proposed. The final rule does not include a minimum testing requirement for *Salmonella.* Each individual establishment can conduct the level of testing they deem necessary to provide assurance that they are meeting the pathogen reduction performance standards for *Salmonella.*

The Agency agrees with public comments and conclusions reached at technical conferences that the proposed *Salmonella* testing would not have provided a good measure of process control. The final rule requires that all slaughter establishments implement testing programs using generic *E. coli* to validate control of slaughter and sanitary dressing procedures. After reviewing all public comments and other materials made available during the comment period, FSIS concluded that using generic *E. coli* is more practical. Generic *E. coli* is generally present in the feces of mammals and birds and is, therefore, an excellent indicator of fecal contamination. It has a higher frequency than *Salmonella* and can be tested and quantified relatively less expensively and, therefore, provides a more efficient measure of control of slaughter and sanitary dressing procedures. Testing for generic *E. coli* is also easier for in-house establishment laboratories.

By basing *E. coli* sampling programs on production volume, the Agency is responding to small establishment concerns over equity of the regulatory burden. In addition, establishments with very low production will be required to conduct sampling for only a limited time period each year. Sampling will only be required for slaughter establishments. Establishments slaughtering more than one kind of poultry or species of livestock will be required to sample only the kind or species representing the most production. There will also be provisions for decreasing the number of samples after implementation of HACCP plans and provisions for using alternative generic *E. coli* sampling programs in cases where the establishment can present data demonstrating control of slaughter and sanitary dressing procedures.

The comments referring to the value of lost product identified a cost that was not addressed in the preliminary analysis. Such costs will not be a factor for the final rule because beef and pork samples collected by FSIS will use the wet sponge swab technique and poultry samples will be collected using a whole

bird rinse. In both cases, no product will be damaged or lost.

With respect to comments referring to high microbial sampling costs identified by the IFSE study, FSIS notes that the Agency's preliminary cost estimates were based on the proposed regulatory requirement of one test per species (carcass or raw ground product) per day for *Salmonella.* The IFSE study based their per establishment costs on a microbiological testing program currently being used in a beef slaughter establishment. The cost estimates generated by the IFSE study were not related to the testing program outlined in the proposed rule.

The comments were correct that FSIS based the preliminary cost analysis on existing laboratory methods and on current laboratory cost estimates. The comments suggesting less expensive methods are only speculative. There is no way to estimate potential new methods. While there is no way to predict the effect of increased demand on costs, it seems reasonable to expect that, in the long run, laboratory analysis costs per sample will go down as more firms implement microbial sampling programs. FSIS notes that short run costs could actually increase as demand goes up faster than the supply of laboratory capability. In the long run, however, establishments should benefit from quantity discounts and lower fixed costs per sample as the total number of analyses increases.

e. Final Cost Estimates. The final rule requires that all establishments slaughtering cattle, hogs, chickens or turkeys or producing a raw ground product from these species or kind meet a new pathogen reduction performance standard for *Salmonella.* This requirement applies to an estimated 5,522 establishments as shown in Table 15. Because the standard has been established using the baseline studies that estimate a national prevalence by carcass, the Agency does not have an estimate for the number of establishments that are currently meeting the standard. The baseline studies do not provide data on how pathogen levels vary between establishments and include data from only the larger establishments that represent most of the production.

TABLE 15.—ESTABLISHMENTS AFFECTED BY THE PATHOGEN REDUCTION PERFORMANCE STANDARD

Category	Very small	Small	Large	Total
Cattle and hog slaughter	1,876	376	66	2,318
Poultry slaughter	100	121	143	364
Raw ground processing	1,413	1,358	69	2,840
Total	3,389	1,855	278	5,522

This analysis of how the *Salmonella* standards will impact the 5,522 establishments will, by necessity, be primarily a qualitative discussion. The analysis will, however, develop two scenarios that can be used to present a range of potential impacts.

Since the focus of this rule is about reducing pathogens in or on raw meat and poultry products, it is anticipated that the potential costs are greatest for those slaughter establishments that are currently not meeting the new pathogen reduction performance standards. For slaughter establishments, the potential costs take one of two forms.

First, even though the rule does not require establishments to test for *Salmonella*, the Agency recognizes that some establishments may conduct their own *Salmonella* testing programs to avoid failing a series of tests conducted by the Agency. Thus, it can be argued that the Agency's intent to implement establishment specific testing for *Salmonella* is indirectly requiring the industry to routinely monitor their *Salmonella* levels to assure they will be in compliance.

The manner in which FSIS will implement its *Salmonella* testing program should help keep establishment costs down. During the first phase, referred to as pre-implementation testing, FSIS will test product from each slaughter or raw ground operation and share those results with the establishment. Thus, before FSIS begins the actual enforcement of the *Salmonella* performance standards, the Agency will provide each establishment with a status report on *Salmonella* incidence. This pre-implementation testing will precede HACCP implementation, which occurs from 18 to 42 months after publication of the final rule. The pre-implementation results will assist the establishments in preparing for implementation of HACCP and the pathogen reduction performance standards. Establishments with low incidence of *Salmonella* will have some level of assurance that they are already meeting the new *Salmonella* standards.

The second type of potential cost relates to the question of whether firms will have to make permanent changes in their processing or production practices in order to comply with the pathogen reduction performance standards for *Salmonella.* Reducing pathogens for slaughter establishments involves either modifying the incoming animals or birds, improving the dressing procedures so as to reduce contamination during procedures such as hide removal and evisceration, or using interventions such as antimicrobial treatments to kill or remove the pathogens following contamination. For many establishments, the process of implementing HACCP programs may, by itself, improve the dressing procedures sufficiently to meet the new standard. Other establishments may have to choose between slowing production lines, modifying some attribute of their incoming live animals or birds, or adding post-dressing interventions such as the new steam vacuum process or antimicrobial rinses.

This analysis will examine the two types of costs for the three industry segments of poultry slaughter, meat slaughter and raw ground processing. The analysis develops two cost scenarios to estimate the impact of the new pathogen reduction standards for *Salmonella.* As discussed earlier, the Agency does not have an estimate for the number of establishments that are currently meeting the standards.

The two cost scenarios are based on three general premises. The first premise is that a certain portion of large establishments will take whatever action is necessary to provide assurance that they are meeting all regulatory requirements. The second premise is that the establishments that are typically having problems controlling operations today will also have problems meeting the *Salmonella* standards. The low cost scenario is based on these first two premises. FSIS has historically found serious control problems in from 5 to 10

percent of establishments. The recent 1,000 establishment review found serious control problems in 8.9 percent of 358 randomly selected establishments. The 1993 review of establishments with the New Turkey Inspection System found 3 of 26 establishments with problems with product ready for shipment. A 1991–1992 survey of poultry reprocessing found that while only 2 percent of poultry is reprocessed off-line, from 5 to 10 percent of the establishments had very high reprocessing rates.

The high cost scenario is based on a third premise that (1) approximately half of the affected establishments are currently not meeting the standards and that (2) most large establishments and the majority of smaller establishments will take some action to assure compliance with the *Salmonella* standards.

As shown in Table 15, there are 2,318 cattle or swine slaughter establishments that must meet the pathogen reduction performance standards for *Salmonella*. The Agency does not have information that would indicate that *Salmonella* testing is routinely conducted by a major segment of the beef or pork industry. The baseline studies have shown a one percent positive rate for steers and heifers and a 2.7 percent positive rate for cows and bulls. In addition, the Agency does not know how, or if, beef and pork establishments would respond to the Agency's *Salmonella* testing initiative. Given the relatively low levels of *Salmonella*, most establishments will probably choose to depend on the assurance provided by a validated, well functioning HACCP program.

To develop a low cost scenario, the Agency assumes that the 66 large establishments would initiate daily testing using in-house laboratories ($20.25 per analysis—$347,490 per year) and that half of the 376 small establishments would conduct weekly testing at outside laboratories ($33.35 per analysis—$326,030 per year). Under a high cost scenario, the large establishments would conduct 8 tests per day ($2.78 million per year), the small establishments would all conduct one test per week ($652,059 per year) and half (938) of the very small establishments would conduct a test each month ($375,388 per year). The low and high *Salmonella* sampling costs for cattle and hog slaughter operations are summarized in Tables 16 and 17, respectively.

Beyond testing, there is the issue of whether the required actions of developing and implementing process control procedures will, by themselves, be sufficient to meet the *Salmonella* standards or whether changes in processing methods will also be required. FSIS recognizes that beef and pork dressing procedures involve a lot of manual steps and, therefore, it is reasonable to assume that substantial pathogen reduction can be accomplished through training and careful monitoring of the dressing procedures. This is especially true for the low volume establishments that do not have automated lines and use what is known as the ''bed kill'' dressing process.

For slaughter establishments that do have to make process modifications, there are several options available. First, FSIS is aware of establishments that are testing live animal washing systems. Second, the preliminary analysis included estimates for the cost of using different antimicrobial treatments for varying sizes of cattle or hog slaughter establishments. The lowest cost option was a hot water spray system with no cabinet. The cost for that system was estimated at $.08 per carcass or approximately $8.78 million annually for all cattle and hog establishments. In contrast, a pre-evisceration acid spray system with both a pre-wash spray cabinet and a sanitizing cabinet was estimated at $.79 per carcass for a low volume establishment. A TSP system for cattle was estimated at $.85 per carcass for a low volume establishment.

The preliminary analysis noted that 23 establishments were already using acetic or lactic acid sprays on carcasses either before or after evisceration. Other establishments had requested approval for citric acid, TSP, or hot water.

Third, FSIS has now approved the new steam vacuum systems for beef and pork operations. The installation of a steam vacuum system is estimated at $10,000 per establishment, with expectations that increased use will result in lower prices. Annual increased utility costs to run a steam vacuum system are estimated at $4,000. Maintenance cost is estimated at 5 percent or $500 per year.

For a low cost option, it is assumed that 10 percent of the large establishments must install a steam vacuum system to meet the new requirements and that half of 376 small establishments must use a hot water rinse at $.08 per carcass. The initial costs for the steam systems would be $70,000. Annual operating costs would be $31,500. Annual operating costs for hot water rinses on half the small establishment production would be $915,000.

Under a high cost option, it is assumed that half (33) of the large establishments would have to install steam systems and that all small and very small establishments would use hot water rinses. The initial cost for steam systems would be $330,000. Annual operating costs would be $148,500. Annual costs for hot water rinses would be $2,075,387. The low and high process modification costs for cattle and hog slaughter operations are summarized in Tables 16 and 17, respectively.

As shown in Table 15, there are an estimated 2,840 establishments that produce raw ground products using ingredients from other establishments. These establishments do not have the same opportunities to reduce *Salmonella* levels as do slaughter establishments. They can control growth by avoiding temperature abuse and can limit cross-contamination, but basically they must depend on the *Salmonella* levels of their incoming product in order to meet the performance standards. These establishments may choose to test incoming product in order to eliminate suppliers whose product is found to be positive. Larger establishments that are important customers of other suppliers may choose to include pathogen requirements in their purchase specifications.

For a low cost scenario, this analysis assumes that the 69 large firms would analyze one sample per day using in-house laboratories ($20.25 per analysis) and that 10 percent (136) of the small firms would test one sample per week using an outside laboratory ($33.35 per analysis). Under a high cost scenario, this analysis assumes that half (679) of the small firms would test one sample per week and that the large firms would double their sampling. Under each scenario, it is assumed that the large establishments would begin testing 12 months after publication and the small establishments 24 months after publication. These starting dates correspond with the end of the Agency's pre-implementation testing. The low and high *Salmonella* sampling costs for raw ground processors are summarized in Tables 16 and 17, respectively.

As shown in Table 15, there are 364 poultry slaughter operations that will be required to meet the new pathogen reduction performance standards for *Salmonella*. FSIS believes that almost all of the larger establishments in the poultry industry currently conduct routine or periodic analyses for *Salmonella* and will use their ongoing testing programs to (1) establish and validate their HACCP controls to assure they will initially comply with the new pathogen reduction performance

standard, and (2) periodically verify continuing compliance. Therefore, the costs for additional *Salmonella* testing in the poultry industry will be minimal.

For cattle and hog operations, this analysis used the cost of antimicrobials from the preliminary analysis in estimating possible process modification costs. In contrast, for the poultry industry, meeting the pathogen reduction performance standards is clearly not analogous to meeting the proposed antimicrobial requirement. The preliminary analysis assumed that 90 percent of all high volume poultry processors and 70 percent of all low or medium volume processors already meet that proposed requirement.

FSIS recognizes that many poultry establishments may have to modify existing procedures to meet the new standards for *Salmonella*. Where cattle and hog dressing operations still include many manual procedures that can be easily controlled by improved training and monitoring, the poultry slaughter industry is highly automated, increasing the probability that process control may require modifications of equipment, facilities, or incoming product. However, because there is extensive vertical integration in the poultry industry, many firms have the added option of controlling *Salmonella* in the live birds. There is evidence that controlling *Salmonella* in feed and controlling rodents in poultry houses can have a substantial impact on the level of *Salmonella* in birds entering the slaughter facility.

In the late 1980's, FSIS tested some alternative processing methods at an establishment in Puerto Rico. Two methods included a counterflow scalder and a hot rinse immediately following the scald tank. At the time, FSIS recognized that it may be expensive to retrofit an existing establishment with a counterflow scalder because of the physical space and plumbing required.

Recognizing that other options are available, this analysis develops potential cost estimates based on the addition of TSP rinses. TSP rinse systems for the poultry industry are relatively expensive. It is currently estimated that a TSP installation would cost $40,000 per line with an operating cost of $0.003 per broiler or $0.014 per turkey.

As a low cost option, FSIS assumes that 36 large poultry establishments (27 broiler and 9 turkey establishments) will add TSP systems. Average broiler production is estimated at 35 million and average turkey production at 6 million. Annual average operating cost are, therefore, $105,000 for a chicken slaughter operation and $84,000 for a turkey slaughter operation. Each large poultry establishment is assumed to have 2 lines. Small establishments were assumed to average 1.5 lines.

As a high cost option, FSIS assumes that 182 (100 large and 82 small) poultry establishments will have to add TSP systems to meet the new requirements. The 182 establishments include 136 chicken and 46 turkey slaughter establishments. The total low cost scenario for poultry slaughter operations is summarized in Table 16. The high cost scenario is summarized in Table 17.

TABLE 16.—SALMONELLA TESTING AND PROCESS MODIFICATION COSTS

[Low Cost Scenario—$000]

Industry sector cost category	Year 1	Year 2	Year 3	Year 4	Year 5+
Sampling by Raw Ground Processors	0	363	599	599	599
Process Changes for Cattle and Hog Slaughter Operations	0	86	489	947	947
Sampling by Cattle and Hog Slaughter Operations	0	347	674	674	674
Process changes for poultry slaughter operations	0	4,676	3,591	3,591	3,591
Total	0	5,472	5,353	5,811	5,811

TABLE 17.— SALMONELLA TESTING AND PROCESS MODIFICATION COSTS

[High Cost Scenario—$000]

Industry sector cost category	Year 1	Year 2	Year 3	Year 4	Year 5+
Sampling by raw ground processors	0	$727	$1,904	$1,904	$1,904
Process changes for cattle and hog slaughter operations	0	404	1,063	2,101	2,224
Sampling by cattle and hog slaughter operations	0	2,780	3,807	3,807	3,807
Process Changes for Poultry Slaughter Operations	0	12,988	18,979	18,144	18,144
Total	0	16,899	25,753	25,956	26,079

After the initial implementation years, the annual cost for all three industry sectors is approximately $5.8 million for the low cost scenario. Under the high cost scenario, the total recurring industry cost of meeting the new performance standards is $26.1 million per year.

The high and low cost scenarios have addressed the potential costs of process modification when establishments find they are not meeting critical limits set to assure compliance with the new pathogen reduction standards for *Salmonella*. While the scenarios have addressed permanent process modifications, it is also reasonable to assume that meeting the *Salmonella* standards would involve some day-to-day process adjustments, i.e., corrective actions that do not involve adding new procedures or new equipment. One example would be the decision to reduce line speeds on a day when the incoming live animals are particularly dirty. The Agency believes that many establishments already take this type of precautionary action.

Under HACCP, there will presumably also be some costs associated with corrective actions related to critical limits set for the purpose of meeting existing regulatory limits. As discussed earlier under methodology, the preliminary analysis did not include any costs for taking corrective actions when such deviations from critical limits occur. If this rulemaking were implementing a new regulatory program where none had previously existed, one might expect to see establishments experiencing considerable additional costs due to temporary production down-time, the need to rework or condemn product or the need to

investigate the causes of deviations and develop corrective action plans. Meat and poultry inspection is, however, an existing regulatory program with a broad range of requirements that are well understood by the regulated industry and enforced by the daily presence of an inspector. The system already includes procedures whereby establishments are (1) implementing corrective actions for almost a million written Processing Deficiency Records (PDRs) annually, (2) developing written Establishment Improvement Programs (PIPs) when continuing problems with facility maintenance are observed, and (3) developing Corrective Action Plans when establishments experience serious ongoing problems in complying with existing sanitation or other regulatory requirements. In addition, the regulations already include a wide array of time and/or temperature requirements for cooking and chilling processed products. Many of the existing regulations have been developed with the standards of food safety in mind that are represented by critical limits under HACCP.

Within this existing regulatory framework establishments already experience down-time and expend considerable resources discussing causes of problems and plans for preventing future occurrences. Thus, from the perspective of looking at the existing system, FSIS does not envision that establishments will experience a significant increase in the costs of corrective action and believes the new system can help establishments avoid situations that currently cost them resources to correct. FSIS views the new program as a more effective way of assuring that establishments meet already established health and safety related requirements. For example, the requirement that establishments develop and implement sanitation SOPs does not include any change in existing sanitation standards. Under the existing system, FSIS takes responsibility for determining when establishments meet the standard and when they can operate. Under the new program, establishments will have to document their procedures and take responsibility for implementing those procedures before they begin operations. FSIS recognizes that some establishments will have to spend more time cleaning facilities and equipment. Today, many establishments conduct sanitation procedures only after inspection has identified a problem. FSIS does not, however, view such increased costs of sanitation as a cost of this rulemaking. If this rule imposes such additional costs, it is because the HACCP-based program will inherently provide improved enforcement procedures in situations where firms have been substituting the inspector's sanitation review for their own production control.

In summary, under the broader cost category of process modification and corrective action, FSIS has concluded that the cost of this rule is most appropriately addressed under the subject of potential costs associated with meeting the new pathogen reduction standards. The low and high cost scenarios provide the estimates for these potential costs. As will be discussed under the next topic of generic *E. coli* testing, these low and high cost scenarios include the types of actions establishments would take if they were also experiencing continuing difficulty in meeting criteria established for generic *E. coli.*

The final rule also requires that all establishments that slaughter cattle, swine, chickens or turkeys implement testing programs for generic *E. coli* to validate control of slaughter and sanitary dressing procedures. All samples will be analyzed for quantity, i.e., number of bacteria present. These testing programs will use production volume as the basis for determining the frequency at which establishments will conduct testing for generic *E. coli.* The frequencies for *E. coli* testing for each slaughter species are as follows:

cattle—1 test per 300 carcasses
swine—1 test per 1,000 carcasses
chickens—1 test per 22,000 carcasses
turkeys—1 test per 3,000 carcasses

These frequencies were selected so that, in the subgroup of establishments accounting for 99 percent of total production for each species, the 5 percent of establishments with the highest production volume would each have to conduct a minimum of 13 *E. coli* tests, or one test window, each day. With these frequencies, 90 percent of all cattle, 94 percent of all swine, 99 percent of all chicken, and 99 percent of all turkeys will be slaughtered in establishments conducting a minimum of one *E. coli* test per day.

The above frequencies notwithstanding, all slaughter establishments must conduct sampling at a minimum frequency of once per week. Establishments with very low volumes, slaughtering at or below 6,000 cattle, 20,000 swine (or a combination of such livestock not to exceed a total of 20,000, with a minimum of 6,000 cattle), 440,000 chickens, or 60,000 turkeys annually, will only be required to sample once per week until a sampling window has been completed where the results indicate that the slaughter and dressing process is under control. Once these criteria have been met, these establishments will be required to complete a new sampling window once each year, or when a change has been made in the slaughter process or personnel. This cost analysis assumes that the average low volume establishment will have to complete two windows (26 samples) each year before they meet the established criteria, recognizing that some establishments will meet the criteria on their first window and others may require three or more.

The final rule also provides that slaughter establishments operating under a validated HACCP system may use a sampling frequency other than that provided for in the regulation if the alternative sampling frequency is an integral part of the establishment's HACCP verification procedures and if FSIS does not determine, and notify the establishment in writing, that the alternative frequency is inadequate to verify the effectiveness of the establishmen's slaughter and sanitary dressing controls. In addition, the final rule allows an establishment to use an existing generic *E. coli* sampling program if it can provide the data necessary to show that the existing plan is assuring adequate control. This analysis has not attempted to account for alternative sampling frequencies. It is likely that any reduction in generic *E. coli* sampling would be offset by alternative verification procedures.

The estimated component costs for collecting, shipping and analyzing a generic *E. coli* sample at a commercial laboratory are shown in Table 18.

TABLE 18.—COST OF A GENERIC E. COLI SAMPLE ANALYSIS COMMERCIAL LABORATORY

[Dollars]

Component	Cost
Average private laboratory cost	13.00
Shipping	7.00
Collecting and packaging	3.75
Total	23.75

The component costs for collecting and analyzing a generic *E. coli* sample at an FSIS field laboratory are shown in Table 19.

TABLE 19.— COST OF A GENERIC E. COLI SAMPLE ANALYSIS FSIS FIELD LABORATORY

[Dollars]

Component	Cost
Sample collection supplies	1.45
Sample collection (0.5 hrs/$18.60 per hr)	9.30
Laboratory supplies	2.90
Laboratory analysis (0.5 hrs/$18.60 per hr)	9.30
Total	22.95

Based on the above average cost estimates, this final RIA uses a per sample cost of $24 per analysis, recognizing that establishments with in-house laboratories will be able to conduct sample analysis at lower costs. In using the average cost of $24 per sample, FSIS is providing an upper bound estimate. The corresponding cost per sample for *Salmonella* was $33.35 at a commercial laboratory. Thus, using generic *E. coli* instead of *Salmonella* for process control validation has reduced the per sample cost by approximately 30 percent.

Aggregate annual sampling costs were estimated by applying the sampling frequencies to annual production data recorded by the Animal Disposition Reporting System (ADRS), an existing Agency database. The ADRS includes the total annual production in terms of number of livestock or poultry slaughtered for each federally inspected establishment. Table 20 summarizes estimates for the number of samples that will need to be collected and analyzed each year by the 364 inspected poultry slaughter operations. As shown in Table 20, the 364 establishments will be required to analyze 419,123 samples annually. Table 21 summarizes estimates for the number of samples that will need to be collected and analyzed each year by the 2,318 inspected cattle and swine slaughter operations. As shown in Table 21, the 2,318 establishments will be required to analyze 252,640 samples annually.

The smallest 2,098 slaughter operations (less than 6,000 cattle, 20,000 swine, 60,000 turkeys and 440,000 chickens) will be required to analyze one sample per week until they demonstrate compliance with established criteria. This analysis assumes an average of 26 samples per establishment per year, recognizing that some may need more and others less. These 2,098 smaller slaughter operations (over 78 percent of the total 2,682) will not be required to conduct any further analyses within a given year unless major changes to facilities, equipment or personnel occur.

Tables 20 and 21 were constructed assuming that all establishments operate on a 52 week, 260 day, 40 hours per week, 2,080-hour work-year. As discussed above, this final RIA does not attempt to account for possible reductions in sampling frequency in establishments where the establishment can demonstrate an existing acceptable alternative program or where alternative frequencies are an integral part of successful HACCP verification procedures.

Tables 20 and 21 incorporate data from the preliminary analysis showing that there are 1,328 state-inspected slaughter establishments, with an estimated 1,270 slaughtering cattle or swine and 58 slaughtering poultry. Based on additional data collected in July 1995, FSIS anticipates that 50 of the state-inspected cattle or swine slaughtering establishments will exceed the limits of 6,000 cattle or 20,000 hogs and will be required to conduct a minimum of one sample per week on an ongoing basis. It is further assumed that none of these establishments will have to conduct more than one per week, i.e., cattle slaughter is under 15,600 (300×52) and swine slaughter is under 52,000 (52×1,000). The other 1,220 state-inspected cattle or swine establishments would average 26 samples per year (2 windows). The July 1995 data indicate that all 58 state-inspected establishments slaughtering poultry process fewer than 60,000 turkeys and 440,000 chickens annually.

TABLE 20.—REQUIRED E. COLI SAMPLING FOR POULTRY SLAUGHTER ESTABLISHMENTS

Annual slaughter production category	Number establishments	Sampling range per day	Average sampling rate per establishment	Annual samples
Chickens over 45.8 million	60	Over 8 per day	10.9 Per Day	170,300
Chickens 5.72 to 45.8 million	125	1–8 per day	4.7 per day	152,230
Chickens 440,000 to 5,720,000	23	1 per week-1 per day	1.9 per week	2,215
Turkeys over 6.24 million	18	Over 8 per day	12.7 per day	59,540
Turkeys 780,000 to 6,240,000	25	1–8 per day	4.8 per day	31,330
Turkeys 60,000 to 780,000	5	1 per week-1 per day	2.7 per week	700
Chickens under 440,000 and Turkeys under 60,000	108	NA	One per week (26 weeks)	2,808
Total	364	NA	NA	419,123

NA—Not applicable.

TABLE 21.— REQUIRED GENERIC E. COLI SAMPLING FOR SWINE AND CATTLE SLAUGHTER ESTABLISHMENTS

Annual slaughter production category	Number of establishments	Sampling range	Average sampling rate per establishment	Annual samples
Cattle over 780,000	16	10 or more per day	14.8 per day	61,750
Cattle between 78,000 and 780,000	50	1–10 per day	3.2 Per Day	41,340
Hogs over 2,080,000	17	8 or more per day	11.6 per day	51,090
Hogs between 260,000 and 2,080,000	29	1–8 per day	4.0 Per Day	30,290
Cattle between 6,000 and 78,000 and/or hogs between 20,000 and 260,000.	216	One per week—one per day.	1.5 per week	16,430
Under 6,000 cattle and under 20,000 Hogs	1,990	NA	One per week (26 weeks)	51,740
Total	2,318	NA	NA	252,640

NA—Not applicable.

The total costs for meeting the final requirements for generic *E. coli* sampling in poultry and livestock slaughter establishments are summarized in Tables 22 and 23. These tables use the same cost estimates as the preliminary analysis for requirements such as plan development, training and recording and reviewing analytical results. Plan development is $640 per plan. The preliminary analysis assumed that 75 percent of operations will require training for aseptic sampling at $403 per operation. Recording and reviewing laboratory results averages 5 minutes per sample at an average wage of $13.43.

As shown in Table 22, implementation costs (training and sampling plan development) for generic *E. coli* sampling in poultry establishments will be $286 thousand. For cattle and swine establishments, the implementation costs are $2.34 million as shown in Table 23. Annual recurring costs total $10.5 million for for the 364 poultry establishments and $6.35 million for the 2,318 cattle and swine establishments. The total implementation costs for all 2,682 slaughter establishments are $2.63 million. The total recurring costs are $16.85 million.

In addition to the required sampling costs, there is the question of whether there will be additional compliance costs for establishments where test results indicate the performance criteria generic *E. coli* are not being met. In addressing this question, FSIS considered several factors. First, FSIS acknowledges that some establishments will find they are in compliance with the pathogen reduction standards for *Salmonella*, but are not meeting the performance criteria for generic *E. coli*. Second, the fact that the performance criteria are not established as enforceable regulatory standards does not mean that there will not be compliance costs. Third, the compliance actions identified for meeting the *Salmonella* standards (steam vacuum system, TSP systems and hot water rinses), are the same actions establishments would likely employ to achieve compliance with the performance criteria.

TABLE 22.—COSTS FOR IMPLEMENTING GENERIC E. COLI SAMPLING PROGRAMS IN POULTRY SLAUGHTER ESTABLISHMENTS

[Dollars in Thousands]

Production Category	Number of establishments (number of annual samples)	Training for aseptic sampling	Sampling plan development	Samples collection and analysis (recurring)	Recording and review (recurring)
Turkeys Under 60,000; Chickens Under 440,000	108 (2,808)	44	69	67	3
Turkeys Between 60,000 and 780,000; Chickens Between 440,000 and 5,720,000	28 (2,915)	6	18	70	3
Turkeys over 780,000; Chickens over 5,720,000	228 (413,400)	3	146	9,992	463
Total	364 (419,123)	53	233	10,059	469

TABLE 23.—COSTS FOR IMPLEMENTING GENERIC E. COLI SAMPLING PROGRAMS FOR CATTLE AND SWINE SLAUGHTER ESTABLISHMENTS

[Dollars in Thousands]

Production category	Number of establishments (number of annual samples)	Training for aseptic sampling	Sampling plan development	Samples collection and analysis (recurring)	Recording and review (recurring)
Cattle Under 6,000; Hogs Under 20,000	1,990 (51,740)	802	1,274	1,242	58
Cattle Between 6,000 and 78,000; Hogs Between 20,000 and 260,000	216 (16,430)	54	138	394	18
Cattle over 78,000; Hogs over 260,000	112 (184,470)	1	72	4,427	206
Total	2,318 (252,640)	857	1,484	6,063	283

After considering the above factors, FSIS concluded that if the low cost scenario for compliance with *Salmonella* standards proves to be more accurate, there will likely be more separate compliance costs for generic *E. coli*. As the costs for *Salmonella* compliance go up, the likelihood of separate generic *E. coli* costs goes down. It is important to note that under the high cost scenario, all cattle and swine slaughter establishments are using the steam vacuum system or a hot water rinse and half of all poultry slaughter establishments are using TSP systems. Under this scenario, it is difficult to imagine that any establishments would

still be failing to meet the performance criteria for generic *E. coli*.

FSIS considered the possibility that the smaller establishments conducting only seasonal testing would increase testing to cover the whole year to provide better assurance of control over sanitary dressing procedures. However, FSIS rejected this possibility after considering the cost pressures on small businesses. FSIS would certainly not expect to see these establishments use both expanded testing and hot water rinses.

3. HACCP Programs—Plan Development and Annual Reassessment Costs

a. Summary of Requirements. The proposed rule included a requirement that each inspected establishment develop a written HACCP plan for each distinct ''process'' conducted on the premises. The proposed rule identified nine process categories that would require separate HACCP plans. Each plan would include: identification of the processing steps which present hazards; identification and description of the CCP for each identified hazard; specification of the critical limit which may not be exceeded at the CCP (and if appropriate a target limit); a description of the establishment monitoring procedures; a description of the corrective action to be taken if the limit is exceeded; a description of the records which would be generated and maintained regarding this CCP; and a description of the establishment verification activities and the frequency at which they are to be conducted.

The requirements in the final rule for HACCP plans are essentially the same. The final rule requires that each establishment conduct a hazard analysis and then develop a comprehensive HACCP plan that covers each hazard identified. The final rule has eliminated the nine process categories because the sequencing of HACCP implementation will be based on establishment size and not on process categories. The final rule also includes the provision that each plan be reassessed on an annual basis.

b. Review of Preliminary Cost Estimates. Using existing databases (PBIS and ADRS) FSIS estimated that the 6,186 federally inspected establishments would require 16,899 HACCP plans, an average of 2.73 plans per establishment. It was assumed that each of the 2,893 state inspected establishments would have 2.1 plans per establishment for a total of 6,120 plans. The total number of plans for all establishments is, therefore, 23,019. The Agency requested specific comments on the assumptions used to estimate the number of state plans, but received none. In estimating the cost of HACCP plan development for federally inspected establishments, FSIS used the following cost estimates as shown in Table 24.

TABLE 24.—HACCP PLAN DEVELOPMENT COSTS

Plan difficulty	Plan sequence		
	First	Second	Third
Easy	4,000	2,000	1,000
Moderate	8,000	4,000	2,000
Difficult	12,500	6,250	3,125

Table 24 accounts for both the complexity or difficulty of the plan and the experience gained by developing previous plans. The table was developed from several sources including discussions with a number of private sector food consultants and the results of the *HACCP Pilot Program Cost Findings* study which was conducted by RTI and completed in August 1994. The RTI Study found that the nine pilot establishments reported plan development costs ranging from $607 to $15,750.

For state establishments, FSIS assumed an average cost of $2,000 for 6,120 plans. For the federally-inspected establishments, the above table generated an average cost of approximately $2,020 per plan. The resulting average cost is relatively low because the preliminary analysis credited each establishment with having developed one plan prior to HACCP because of the need to develop plans for sanitation SOPs, microbial sampling and time-temperature controls. It was assumed that the experience gained in developing plans for these three near-term interventions could be applied to their first HACCP plan.

- The total cost for developing 23,019 plans was estimated at approximated $46.4 million ($34.14 million federal and $12.24 million state) spread over a 3 year implementation period.

c. Comments on the Preliminary RIA. There were several specific comments on the cost of developing a HACCP plan. Examples include:

- To write each plan would cost around $9,000.
- Average time to draft a plan is 300 hours.
- Average time of 300 hours at $125 per hour ($37,500).
- An average of $5,000 per establishment.
- Approximately $1,000 to $1,500 per establishment.

More general comments stated that FSIS had underestimated or overestimated the cost of plan development or that FSIS should develop or pay for the cost of developing plans. There were also comments that indicate that some establishments believed that they would be required to have a separate plan for each product they produce.

d. Response to Comments. The comments that suggested FSIS had overestimated costs or had developed an upper limit on implementation costs, pointed out that a market driven response to the rule would likely cut costs. The market would increase the number of consultants which would be available at reduced costs, especially for small establishments that are most likely to employ outside consultants. While FSIS agrees that the number of available consultants will increase and that the hourly cost for outside assistance will likely decrease, the Agency notes that Table 24 was developed with those factors in mind. The discussions with private sector food consultants focused on projected costs, recognizing that costs would decrease as more consultants became available and the overall level of industry expertise and experience increased.

The comments included a wide range of estimates for the cost of developing a HACCP plan. Most of the specific cost estimates contained in the comments were within the ranges presented in Table 24. The comments do not provide a compelling reason to modify Table 24, especially since FSIS has an ongoing effort to develop implementation aids for establishments that will help keep plan development costs down. In addition to generic models that will be available at least six months before any mandatory requirement, FSIS is developing or considering: (1) Information publications, such as a HACCP Handbook that explains how a establishment can effectively and economically incorporate the seven principles into its operations; (2) training videos and computer programs that present HACCP implementation guidance in alternative formats; (3) models for onsite HACCP training of establishment employees; and (4) a catalog of hazards with examples of control measures and generic plans for each slaughter and processing category described in the proposed rule. FSIS is also planning to sponsor in-establishment demonstration projects to generate real-world information and guidance about near-term and HACCP implementation issues in small businesses.

FSIS will also continue its technical assistance to state programs by including states' training officials in

Federal training efforts, by facilitating state access to and use of federal computer support systems, and by expansion of state/federal cooperative efforts through the Conference for Food Protection, the National Association of State Departments of Agriculture, the Association of Food and Drug officials, and the Meat and Poultry Inspection Advisory Committee. Also, FSIS' plans for in-establishment demonstration projects referenced above will focus on small establishments under State regulation as well as those under Federal regulation.

The findings from the nine pilot establishments reported in the RTI study were based on conditions existing in the 1991–1992 time period. Many factors have changed since then including the number of available HACCP consultants, the number of trained individuals, the number of courses available and the general level of knowledge concerning the implementation of HACCP principles in food processing establishments. These factors should help drive plan development cost down.

The 1994 RTI study noted that: ''Several participants commented that there is a lot more discussion and information about HACCP in the trade press and elsewhere today than there was even three years ago. Without exception, participants felt that USDA could reduce the costs of HACCP—especially training and HACCP plan development costs—by making as much information about HACCP available as possible.''

In response to comments that FSIS should develop or pay for the development of plans, FSIS believes that these suggestions would diminish the principle of having industry take ownership and responsibility for the production process. This principle is a key factor in HACCP. If FSIS developed or paid for the plans, it would detract from the establishment's assuming ownership and responsibility for the HACCP plans. FSIS also believes that government funding of the plans would set a bad precedent. If the government assumes the cost of compliance with regulatory actions which ultimately benefit the regulated industry, establishments will campaign for additional actions leading to greater government outlays. Government funded plans would also require an increase in the FSIS budget requiring a corresponding increase in taxes and also likely lead to more expensive plans. By bearing the costs, establishments will have a stronger incentive to control plan development costs than FSIS. Finally, FSIS expects that market forces will permit establishments to shift some of the costs to producers and consumers which is a more equitable allocation of costs than placing the burden on taxpayers in general.

In response to comments expressing concern that each product would require a HACCP plan, FSIS notes that there is a major distinction between requiring that ''each product must be covered by the establishment's HACCP plan'' and requiring that ''each product have a unique HACCP plan.'' The final complexity of an establishment's HACCP plan is related to the number of distinct processes used by the establishment and not the number of products produced.

e. Final Cost Estimates. Although the final rule has eliminated the process categories and requires a single, comprehensive HACCP plan for each establishment with hazards, the final cost estimates are based on the earlier estimates of 16,889 plans for federally inspected establishments and 6,120 plans for state inspected establishments. Since final cost is still a function of the number and complexity of processes, FSIS sees no reason to change the methodology for estimating HACCP plan development costs. Furthermore, it is reasonable to assume that establishments may develop their plans in segments beginning with relatively simple processes and then proceeding to more complex processes.

The final cost estimates for 23,019 HACCP plans are shown in Table 25. The final cost estimate for federally inspected establishments is based on Table 24 which presents different costs, depending on the sequence, for easy, moderate and difficult plans. The final cost estimate does not, however, assume that the first HACCP plan is actually the second plan because of experience gained in developing sanitation SOP plans and microbial sampling plans. The result is that the average cost for the 16,899 plans for federally inspected establishments is now $3,240, up from the preliminary analysis average of $2,020 per plan. The average cost for 6,120 plans in state inspected establishments is $2,000, the same per plan cost used in the preliminary analysis.

It is assumed that HACCP validation is an integral part of HACCP plan development and that the requirement for annual reassessment will be a minimal cost for establishments that do not modify their products or processes and are not experiencing difficulty in meeting all critical limits. The analysis assumes that the average annual reassessment will take two hours per plan at a quality control manager's salary of $25.60 per hour. Thus, the average annual reassessment will cost $51.20 per plan.

TABLE 25.—COST OF HACCP PLAN DEVELOPMENT AND ANNUAL REASSESSMENT

Establishment category	Number establishments	Number plans	Total cost ($000)	Average cost per plan (dollars)	Annual reassessment ($000)
Low	2,234	5,106	17,762	3,479	261
Medium	3,103	8,712	28,075	3,223	446
High	849	3,081	8,911	2,892	158
Subtotal	6,186	16,899	54,748	3,240	865
State	2,893	6,120	12,240	2,000	313
Total	9,079	23,019	66,988	2,910	1,179

As discussed above under methodology, this cost analysis assumes a static number of establishments and processes while recognizing that the rule will add to the cost of new establishments or processes. One such

cost would be the annual reassessment for establishments that add new processes or substantially modify existing production practices.

4. HACCP Programs—Recordkeeping Costs

a. Summary of Requirements. The final rule requires that all establishments record observations when monitoring critical control points and document any deviations and corrective actions taken. The rule also requires a certification review of records by an employee not involved in recording observations. Such recording and certification review of observations at critical control points is a fundamental HACCP principle.

FSIS is requiring that the records involving measurements during slaughter and processing, corrective actions, verification check results, and related activities contain the identity of the product, the product code or slaughter production lot, and the date the record was made. The purpose of this requirement is to assure that both the company and the regulator can readily link a record to a product and the timeframe in which it was processed. FSIS is also requiring that the information be recorded at the time that it is observed and that the record be signed by the operator or observer.

FSIS is also requiring that the HACCP records be certified by a company employee other than the one who produced the record, before the product is distributed in commerce. The purpose of this review is to verify that the HACCP system has been in operation during the production of the product, that it has functioned as designed and that the company is taking full responsibility for the product's meeting applicable regulatory requirements. The employee conducting the certification review must sign the records.

FSIS is also requiring that HACCP plans and records be available for review by program personnel. Records access is necessary to permit verification of all aspects of a HACCP system.

b. Review of Preliminary Cost Estimates. In the preliminary cost analysis, recordkeeping cost was defined to include the time it takes to make observations and record the results of those observations plus the cost of certifying and maintaining records. Several key variables were involved in the estimates for HACCP recordkeeping costs for the preliminary RIA. First, it was established that recordkeeping costs are related to the number of processing lines operating simultaneously and not the number of HACCP plans. That is, an establishment may have several HACCP plans but never have more than one operating at any given time. To estimate recordkeeping costs it was necessary to collect data on the average number of production lines operating per shift. To estimate product lines, data was collected for a sample of low, medium and high volume establishments from each of the FSIS Regional Offices. The data on average number of simultaneous operating lines was collected for processing operations, red meat slaughter operations and poultry slaughter operations for both first and second shifts. Costs were then estimated based on 7,639 federal and 4,080 state inspected operations as shown in Table 26.

TABLE 26.—OPERATIONS IN FEDERAL AND STATE INSPECTED ESTABLISHMENTS

Manufacturing operation	Federal inspected establishments	State inspected establishments	Total
Processing	6,006	2,752	8,758
Meat slaughter	1,327	1,270	2,597
Poultry slaughter	306	58	364
Total	7,639	4,080	11,719

It was further assumed that each State establishment was a single shift establishment and that State establishments would have the same number of production lines as the first shift of a low volume federal establishment.

Other variables included the average number of CCP's per plan and the average amount of time for recording and reviewing records per CCP. For federally inspected establishments, the analysis assumed that processing HACCP plans have an average of 7.4 CCP's and slaughter plans have an average of 5 CCP's. It was assumed that State inspected establishments will average 5 CCP's per HACCP plan. Recording time was estimated at an average of 5 minutes per CCP per shift. Review time for certification was estimated at an average of 2 minutes per CCP per shift. Recording cost was estimated based on an employee earning $12.87 per hour. Certification cost was based on a supervisor or QC technician earning $18.13 per hour. All storage costs were based on a national survey of storage costs showing an average annual cost of $8.40 per square foot.

Total recordkeeping costs are the sum of the costs for three components: Monitoring CCP's and recording findings, certifying records, and storing records. The following calculation for the annual costs of recording the findings from monitoring CCP's in State processing operations illustrates how the above estimates were used in estimating total recordkeeping costs:

Recording Costs For State Processing Operations =
(2,752 operations) × (1.1 average production lines)
× (5 minutes per CCP per day ÷ 60 minutes per hour)
× (5 CCP's per line)
× ($12.87 per hour) × (260 days per year)
= § 4.22 million

The total costs per establishment for recordkeeping, as estimated in the preliminary analysis, are summarized in Table 27. The total aggregate costs are shown in Table 28. The average cost per establishment and the total aggregate costs were reduced to account for the recordkeeping that already occurs in TQC, NELS and SIS establishments.

TABLE 27.—SUMMARY OF RECORDKEEPING COSTS PER ESTABLISHMENT

[Dollars]

Establishment category	Recording observations	Certifying records	Maintaining records	Recurring annual cost
Low	2,560	1,442	28	4,030
Medium	4,202	2,368	52	6,621
High	10,994	6,195	90	17,279
State	2,163	1,219	33	3,415

TABLE 28.—HACCP RECORDKEEPING COSTS

[$ Thousands]

Establishment category	Number of establishments	Annual costs
Low	2,234	9,003
Medium	3,103	20,545
High	849	14,669
Subtotal	6,186	44,217
State	2,893	9,880
Total	9,079	54,097

With the methodology used for estimating recordkeeping costs, it is also possible to look at annual recording and certification cost per operating line. Assuming a line runs 52 weeks, 40 hours per week, 2,080 hours per year,

the average annual recordkeeping cost (excluding any storage costs) for a processing line in a federally inspected establishment would be $3,226.23 ($2,063.40 recording plus $1,162.74 certification). The average annual cost for a federally inspected slaughter line would be $2,179.88 ($1,394.25 recording plus $785.63 certification). All lines in State inspected establishments were assumed to have an annual cost of $2,179.88.

c. Comments on the Preliminary RIA. Most of the comments referring to HACCP recordkeeping costs were general comments that the costs would be extremely burdensome. The comments did not question the methodology used in the preliminary analysis to estimate either recording, reviewing or storage costs. The comments included at least two proposed modifications that would substantially reduce costs. One comment suggested that small establishments record only deviations from the HACCP plan and responses to them. At one of the public hearings a representative from a consumer organization suggested that inspectors could conduct the recordkeeping in small establishments.

d. Response to Comments. FSIS believes that while both of the above suggestions would reduce cost, they both do damage to the concept of HACCP. Having the industry take ownership and responsibility of the production process is a key component of HACCP. Having inspectors conduct the recordkeeping would severely detract from ownership. Furthermore, a fundamental HACCP principle requires that observations be recorded and reviewed at critical points in the manufacturing process on an ongoing basis. Recording only deviations does not meet this principle.

The discussion of sanitation SOP recordkeeping costs identified three factors that affect how one views such costs. At least two of those factors apply here. HACCP recordkeeping is a cost that can be reduced through good management and efficiency and should also decrease with experience. If recordkeeping can be conducted by employees working at a CCP location, the additional cost should be minimal. HACCP should also substantially reduce the time establishment officials currently spend interacting with or responding to inspection findings. In addition to responding to the approximately 700,000 to 800,000 Processing Deficiency Records (PDRs) per year, establishments have thousands of meetings with program officials following reviews conducted by area and regional officials or reviewers from the Program Review Division in Lawrence, Kansas. FSIS believes strongly that establishment officials will find some recordkeeping time from reducing inspection interaction time.

e. Final Cost Estimates. After considering the comments, FSIS does not see a need to adjust the costs estimates shown in Tables 27 and 28. The final aggregate cost estimates for recordkeeping are those shown in Table 28.

5. HACCP Programs-Training Costs

a. Summary of Requirements. The final rule requiring that each establishment have access to a HACCP-trained individual remains identical to the training requirement as proposed. The final rule does not, however, include the proposed requirement that the name and resume of the HACCP-trained individual be on file at the establishment.

b. Review of Preliminary Cost Estimates. The proposed rule included the requirement that each establishment have access to a HACCP-trained individual. In the preliminary cost analysis FSIS pointed out that establishments would have options for meeting that requirement. For example, establishments could train an existing employee or use a consultant on an as-needed basis. To provide a cost estimate, FSIS assumed that each slaughter or processing operation would send one employee to a recognized HACCP course for approximately three days.

The preliminary analysis assumed a combination establishment would require training for both slaughter and processing operations. The preliminary analysis identified 11,719 separate meat slaughter, poultry slaughter and processing operations. The analysis assumed that 5 percent of these operations currently have a trained individual and 11,133 would require training.

Training would be a one-time, up-front expense. The cost of training 11,133 establishment employees at $2,514 each would be approximately $28 million. The $2,514 included tuition for a three-day course, travel expenses and wages. In estimating these costs, FSIS used a listing of 1994 HACCP courses compiled by the USDA Extension Service.

c. Comments on the Preliminary RIA. Most of the comments relating to the cost of training industry personnel were of a general nature (e.g., FSIS underestimated the cost of training) or suggested that all training be funded by USDA. Many small processors lumped training with other requirements and indicated that the cost of implementing HACCP would force them to close. A couple of comments indicated that the commenter believed they would have to hire an additional HACCP-trained employee. Several comments noted that the training costs estimated in the IFSE study were far higher than the costs estimated by FSIS.

d. Response to Comments. With respect to the comments that referred to the higher training costs estimated in the IFSE study, FSIS notes that the IFSE study assumed that training was both an up-front and a continuing annual expense. They also assumed that HACCP training was necessary for top management, supervisors and relevant hourly employees. Since the IFSE study was written with a beef slaughter establishment in mind, it is assumed that the authors believed it is necessary to train some or all of the employees working the dressing line. Under their assumptions, a high turnover would require substantial recurring annual costs.

The FSIS cost estimate was tied to meeting the proposed regulatory requirements. The IFSE estimates are the authors' judgment of what would be required to ''successfully'' implement an effective HACCP program. The IFSE study did not provide any rationale for the cost estimates used. For example, the authors assumed that annual training costs for 5,127 small businesses would be $10,000 each for a total annual cost of $50 million. That estimate would appear high considering the large number of establishments with fewer than five employees.

The IFSE study does raise the issue of whether a single three-day course for one employee is adequate to ensure an effective HACCP program. A low cost ongoing training program may be better. FSIS now plans on having training videos and/or correspondence courses available for each establishment. This will present an easier burden for very small establishments because it will not require having an employee leave on travel to receive training. As the number of available courses and locations increases, travel costs will also decrease. Trade associations can help provide local training for all establishments near large metropolitan areas.

FSIS also recognizes that employee turnover will require some level of recurring cost. The necessity of training new hires should, however, decrease over time as the available pool of HACCP-trained individuals increases. FSIS will, however, include a 10 percent recurring cost in the final cost estimate.

e. Final Cost Estimates. The final training cost estimates are shown in Table 29. The one-time cost of $27,988 thousand is the same cost as estimated for the preliminary analysis. In response to comments, an annual recurring cost of $2.8 million has been added.

TABLE 29.—HACCP—TRAINING COSTS

[$ Thousands]

Establishment category	Number of employees	One-time cost	Recurring costs (10%)
Low	2,610	6,562	656
Medium	3,593	9,033	903
High	1,054	2,650	265
Subtotal	7,257	18,244	1,824
State	3,876	9,744	974
Total	11,133	27,988	2,799

6. HACCP Programs—Impact on Total Quality Control/Overtime Issues

a. Summary of Requirements. The proposed rule did not include proposed revisions to existing Total Quality Control (TQC) regulations. However, the preamble stated that FSIS is considering having HACCP be the only Agency recognized health and safety related process control system. The preliminary RIA published with the proposed rule stated that: ''With the publication of the rule, TQC establishments could lose their authority to produce and ship product after their normal shift production time. As a result, 287 active TQC establishments could begin to incur annual overtime charges.''

The final decisions on TQC regulations have not been made. This final analysis uses the impact on overtime as a conservative estimate of the potential impact of pending decisions.

b. Review of Preliminary Cost Estimates. The Agency's supplemental cost analysis recognized that there are 287 TQC establishments that would incur overtime costs to continue their current operating schedules if the TQC regulations were eliminated. The total cost for these 287 establishments was estimated at $2.1 million per year. The preliminary analysis estimated that the total of 287 included 112 low, 124 medium and 51 high volume producers.

c. Comments on the Preliminary RIA. A TQC establishment commented that under the proposed rule they would have to pay an additional $32,308.80 per year in overtime charges. The establishment commented that these additional overtime charges would equate to a substantial portion of their annual net profit.

d. Response to Comments. The comment from the TQC establishment is consistent with the preliminary analysis that was based on the premise that TQC establishments would lose their authority to produce and ship products after their normal shift production time. If such authority is withdrawn establishments would have to incur overtime charges if they want to continue their present operating schedules.

The establishment estimated its potential overtime cost based on an assumption of 100 percent coverage. If the establishment's overtime hours were covered by a patrol assignment, they would be subject to the provisions of proportional coverage and the actual level of overtime charges could be substantially lower.

Inspection assignments cover 8 hours of regular time and may also include scheduled overtime inspection. An assignment may specify 8 hours in one establishment or direct the inspector to cover multiple establishments, i.e., a patrol assignment where the inspector would spend a portion of each day in each establishment. In cases where an inspector spends 8 hours in a single establishment and that establishment decides to operate for 2 hours of overtime on a routine basis, inspection coverage may be provided by having the assigned inspector work 2 hours of overtime. This type of coverage would be likely if the establishment was located in an isolated area. In this type of case, the establishment would be charged for 2 hours of overtime inspection each day. This type of overtime situation would lead to maximum costs as suggested by the commenter.

If the establishment was part of a patrol assignment and there were two establishments working 2 hours of overtime, the overtime production could be covered by having the inspector work 2 hours of patrol overtime, but each establishment would only be billed for one hour, i.e., proportional overtime coverage.

Because the majority of establishments are covered by patrol assignments, proportional coverage is employed frequently. Thus, the establishments' estimate of $32,308.80 is a maximum level. The actual level of charges could probably be substantially lower.

e. Final Cost Estimates. This final analysis has included a cost of $2.1 million for annual overtime charge. The analysis has assumed that the additional overtime charges will occur on the same timeframe as the sequencing of HACCP implementation.

E. Summary of Costs for Low Volume Producers

Because there has been particular interest in the impact of this rule on small business, this final section summarizes the overall costs for low volume producers. Table 30 illustrates the costs faced by a typical low volume producer over the four-year implementation period. Because there are less than 100 low volume poultry slaughter establishments, the costs for generic *E. coli* sampling was not included in Table 30. The costs illustrated in Table 30 apply to the majority of inspected establishments, an estimated 2,234 federally inspected establishments and all but a few of the 2,893 state inspected establishments. These 5,000-plus establishments all meet the regulatory flexibility definition for a very small establishment and have the full 42 months to implement mandatory HACCP systems. There are another 658 establishments (medium volume production) that will have slightly higher costs, but will also have 42 months to implement HACCP because they meet the regulatory flexibility criteria for a very small establishment. All establishments meeting the regulatory flexibility criteria for small establishments will have 30 months to implement HACCP. The 353 large establishments (more than 500 employees) will be required to implement HACCP 18 months after publication.

TABLE 30.—SUMMARY OF COSTS FOR A TYPICAL LOW VOLUME ESTABLISHMENT

[Dollars]

Cost category	Year 1	Year 2	Year 3	Year 4	Year 5+
I. Sanitation SOPs Plans and Training	[a] 190	.....	.....	.....	
Observation and Recording	1,242	1,242	1,242	1,242	1,242
II. Compliance With *Salmonella* Standards	.....	.....	.....	[b] 0–1,200	[b] 0–1,200

TABLE 30.—SUMMARY OF COSTS FOR A TYPICAL LOW VOLUME ESTABLISHMENT—Continued

[Dollars]

Cost category	Year 1	Year 2	Year 3	Year 4	Year 5+
III. HACCP Plan Development				4,231–7,952	
Annual Plan Reassessment					177
Initial Training				[d] 2,937–3,368	
Recurring Training					294–337
Recordkeeping				2,015	4,030
IV. Additional Overtime				[e] 0–3,702	[e] 0–7,404
Total	1,432	1,242	1,242	10,425–11,625	5,743–6,986

[a] This cost for the 112 low volume TQC establishments would be $64.

[b] The estimate of $1,200 is based on monthly testing for two products and an antimicrobial rinse for one.

[c] The Cost Analysis is based on estimates that low volume federally inspected establishments will require an average of 2.29 plans each, at a cost of $3,479 per plan (see Table 25) for a total average plan development cost of $7,952. The number of plans for federally inspected establishments is based on data from existing FSIS data bases. It was assumed that state plans have an average of 2.12 plans each for a total cost of $4,231 per establishment ($2,000 per plan).

[d] Average training costs for state establishments ($3,368 per establishment) were estimated to be slightly higher than the average federally inspected low volume establishments ($2,937 per establishment) because the state programs have a higher percentage of combination slaughter and processing establishments. The cost analysis assumed that plans would train one individual for each processing, red meat slaughter and poultry slaughter operation.

[e] The preliminary analysis estimated that 112 of 287 active TQC establishments are low volume producers. The average TQC establishment avoids an annual overtime charge of $7,404. The cost estimates in Table 30 for additional overtime costs apply only to those 112 establishments and assume that TQC provisions will be phased out as HACCP is phased in—42 months after publication for the low volume establishments. Because the overtime costs apply to only 112 establishments, they are not included in the Table 30 totals.

The average costs shown in Table 30 will be a burden for many of the low volume producers. However, there are factors that should help diminish the burden. Most of the costs and essentially all of the recurring costs are labor costs for monitoring sanitation procedures, monitoring HACCP critical control points and keeping both HACCP and sanitation records. As the above analysis points out, these are costs that can be reduced through efficient management and allocation of resources and should decrease with experience. The Agency also views a portion of these costs as a shift in resources, i.e., establishment management should spend more resources monitoring establishment operations and less time interacting with program personnel.

Another way of illustrating costs to small businesses is to look at the costs for one or more specific examples. Table 31 illustrates the costs for a small, single-shift, processing establishment (no TQC or sanitation PQC program) with two distinct production operations other than raw ground product (overall average was estimated at 2.29 based on data shown in Table 25).

TABLE 31.—COSTS FOR TYPICAL SINGLE-SHIFT PROCESSING ESTABLISHMENT

[Dollars]

Requirement	Development and Implementation costs	Recurring Annual Costs
Sanitation SOP's	190	1,242

TABLE 31.—COSTS FOR TYPICAL SINGLE-SHIFT PROCESSING ESTABLISHMENT—Continued

[Dollars]

Requirement	Development and Implementation costs	Recurring Annual Costs
HACCP Plan Development	6,958	0
Annual Plan Reassessment	0	102
Training	2,514	251
Recordkeeping	0	6,480
Total	9,662	8,075

If one of the two production operations produced a raw ground product, the establishment would have to meet the pathogen reduction performance standard for that product. As noted earlier in the development of the low and high cost scenarios for meeting the new *Salmonella* standards, raw ground operations do not have the same opportunities to reduce *Salmonella* levels as do slaughter establishments. They can control growth by avoiding temperature abuse and can limit cross-contamination, but basically they must depend on the Salmonella levels of their incoming product in order to meet the performance standards. These establishments may choose to test incoming product in order to eliminate suppliers whose product is found to be positive. The final analysis has assumed that the low volume producers would not test incoming ingredients.

Table 32 illustrates the costs for a small, single-shift, combination (slaughter and further processing) establishment that slaughters cattle or swine, but not both, and has a single further processing operation other than raw ground product. The establishment is not under TQC inspection.

TABLE 32.—COSTS FOR TYPICAL SINGLE-SHIFT COMBINATION ESTABLISHMENT

[Dollars]

Requirement	Development and implementation costs	Recurring annual costs
Sanitation SOP's	190	1,242
Compliance with *Salmonella* Standards	0	800
E. coli Sampling	1,043	653
HACCP Plan Development	6,958	0
Annual Plan Reassessment	0	102
Training	5,028	503
Recordkeeping	0	5,434
Total	13,219	8,734

The cost of meeting the pathogen reduction performance standards assumes that the establishment will use a hot water antimicrobial rinse and have one sample per month analyzed at an outside laboratory ($33.35 per sample-$400 per year). The average number of head slaughtered in a low volume establishment is approximately 5,000

annually. The annual cost for the rinse is $400.

The development costs for *E. coli* sampling in the small establishment includes $640 for developing a sampling plan and $403 to train an individual to conduct aseptic sampling. The recurring costs are based on the assumption that an average low volume slaughter establishment will have to complete two sampling windows (26 samples) before they demonstrate compliance with established criteria.

The cost of HACCP training has doubled for the combination establishment because the FRIA assumed that slaughter and processing operations are significantly different, so that the establishment must either train two employees or send one employee to two separate training courses.

The HACCP recordkeeping costs (monitoring CCP's and recording findings, reviewing records and storing records) in the above two examples assume that the establishments are operating each process continuously over a standard 52-week, 260-day, 2,080-hour work year. Data collected during the preliminary analysis indicates that many low volume establishments frequently have only a single production line operating at a given time. As shown in Tables 27 and 30, the final analysis estimates an average annual cost for HACCP recordkeeping of $4,030 for low volume establishments.

Appendix A to Final Regulatory Impact Assessment

Response to Comments Related to the Preliminary Regulatory Impact Analysis But Not Addressed Directly in the Text of the Final Analysis

1. A comment noting that the ''data in Tables 1 and 2, (60 FR 6781) for *Toxoplasma gondii* are confusing or in error'' is correct. The tables as published contained typographical errors that have been corrected for this analysis. The number of cases of foodborne illness from toxoplasmosis should be 2,056 cases, not 3,056 cases. The total number of cases from the foodborne illnesses considered also needs to be adjusted to correct for the above typographical error. Specifically, the total number of cases should be 3,605,582 to 7,132,823, and not 3,606,582 to 7,133,823.

2. The same comment questioned whether it is true that the ''estimated medical costs for the 2,056 cases (toxoplasmosis) and 41 deaths is $2,7000,000,000?'' This estimate is correct but these costs include the estimated costs of lost productivity and costs of residential care as well as the estimated medical costs of toxoplasmosis.

3. There were several comments that indicated that while attempting to reduce the overall public health risk, the Agency could be increasing the risk to farmers and small producers that now have livestock custom-slaughtered at inspected establishments. If a large number of these small diverse businesses go under, the comments predicted an increase in at- home slaughter under very marginal conditions. These comments imply at-home slaughter is a high risk practice using terms such as barn yard butchering or shade tree butchering or back shed butchering.

Changes in the final rule should allow most small businesses to continue to operate successfully under inspection. There are some small businesses that are currently primarily custom-exempt/retail exempt operations that may choose to withdraw from inspection. These types of facilities will still be available for their custom slaughtering services.

4. A comment referred to the FSIS assertion that consideration of the costs of the various alternatives under examination is not relevant because the alternatives do not meet the Agency's goal of achieving the maximum pathogen reduction possible. The commenter concluded that this is an entirely inappropriate analytical framework for the examination of regulatory alternatives. By starting from the assumption that only the maximum benefit attainable will suffice, FSIS effectively renders its consideration of available regulatory alternatives a complete sham. The purpose of a regulatory impact assessment should be to examine both the benefits and the costs attributable to each available alternative, and to consider whether there is an alternative to the Agency proposal that is a more cost-effective means of addressing the problem at hand.

5. One commenter stated that the Agency must include the costs attributable to the retained requirements as well. These retained costs will significantly increase the operational costs of the combined, layered system. FSIS does not agree that the RIA needs to include the cost of existing requirements.

6. Comments expressed concern that the proposed rule was an experiment to collect the data needed to determine whether it was a good idea. These comments stated that industry should not bear the cost of a government research project. FSIS has clearly stated the public health objective of this rule.

7. There are several comments that referred to a study conducted by the Research Triangle Institute for FSIS. In that study, *HACCP Pilot Programs Cost Findings,* August 31, 1994, RTI collected cost information during personal interviews at all nine establishments that had participated in USDA's HACCP Model Pilot Program.

One comment noted that the pilot establishments used for the study are establishments that are larger than most of the establishments that are going to be affected. The RTI study noted that none of the voluntary participants have annual sales under $3 million. The RTI study was one source of information for the FSIS cost analysis. The Agency did not use the information in a way that suggested it was representative of all establishments or in any way imply that it was.

Another comment stated that USDA relied very heavily on the nine pilot establishment studies. The data collected by RTI was one source of information used for the preliminary cost analysis. The analysis clearly cites the RTI study as one of several data sources.

A comment during the public hearing attributed a cost of $23,000 or $27,000 to the RTI study for a hazard analysis, plan development and validation for a small business that doesn't need any equipment or establishment upgrade. The RTI study reported costs for plan development ranging from $607 to $15,750. FSIS assumes that the hazard analysis is part of plan development. The RTI study did not address a separate cost component for validation.

8. One comment indicated that the source of the estimates for total cases and deaths for *E. coli* O157:H7 does not support the number used in the benefit estimates. The preliminary analysis was based on 10,000–20,000 total cases and an estimate of from 200–500 total deaths. Sources identified were the AGA conference and CDC communications. The ''CDC comm.'' citation mentioned in the FSIS proposal refers to both the Ostroff et al. (1989) and the McDonald et al. (1988) articles as described in the comment. These references provide an incidence rate for *E. coli* O157:H7 of 2.1/100,000 to 8/100,000. The AGA conference suggests there are 10,000 to 20,000 cases of *E. coli* O157:H7 each year in the United States. This translates to a rate of approximately 4/100,000 to 8/100,000, which is higher on the lower estimate. ERS chose to use the consensus numbers because they reflect the current thinking of a nonadvocate panel of experts. FSIS agrees with the commenter that better data on

foodborne disease incidence is needed but believe that the preliminary analysis used the best estimates available.

9. Commenter stated FSIS relied on faulty data. FSIS responds that there is a difference between saying data are limited and saying data are faulty. Existing food safety data are limited and more thorough data may not be available for a long time.

10. A commenter noted that FSIS did not address the ''cost'' of the development of a highly susceptible population because some exposure is necessary to establish immunity. The same commenter suggested there might be a ''nutritional health'' cost penalty, i.e., the rule would increase the cost of food so much that consumers would not be able to afford nutritional food. FSIS notes that the commenter did not provide support for these ''costs.''

11. A commenter noted that their low annual insurance premium of $150 strongly suggests that the insurance industry considers their existing safety record commendable and worthy of a low liability rate. FSIS notes that another comment has suggested that lower rates are being offered in conjunction with improved process control systems.

[FR Doc. 96–17837 Filed 7–18–96; 8:45 am]

BILLING CODE 3410–DM–P

federal register

Thursday
July 25, 1996

Part III

Department of Transportation

Federal Aviation Administration

14 CFR Part 440

Financial Responsibility Requirements for Licensed Launch Activities; Proposed Rule

DEPARTMENT OF TRANSPORTATION

Federal Aviation Administration

14 CFR Part 440

[Docket 28635; Notice 96–8]

RIN 2120–AF98

Financial Responsibility Requirements for Licensed Launch Activities

AGENCY: Federal Aviation Administration, Associate Administrator for Commercial Space Transportation, DOT.

ACTION: Notice of proposed rulemaking.

SUMMARY: The Associate Administrator for Commercial Space Transportation of the Federal Aviation Administration (FAA) currently prescribes financial responsibility requirements for licensees authorized to conduct commercial space launch activities on a case-by-case basis, after analyzing the risks associated with licensed activities. This proposed rulemaking would codify the Associate Administrator's approach to implementing these requirements in rules of general applicability. Specifically, the proposed regulations would establish how certain risks are allocated among the various launch participants and addressed through financial responsibility requirements, including statutorily-based reciprocal waivers of claims. The proposed regulations would also address eligibility for payment by the United States Government of certain third-party claims and this Notice requests comments on appropriate means of implementing this obligation. The FAA is undertaking this rulemaking initiative to implement financial responsibility requirements under the Commercial Space Launch Act of 1984, as amended, codified at 49 U.S.C. Subtitle IX, ch. 701, Commercial Space Launch Activities.

DATES: Comments must be received by September 23, 1996.

ADDRESSES: Comments should reference the docket number of this notice. Commenters should mail four copies of any comments to the FAA Rules Docket, Room 915G, Federal Aviation Administration, U.S. Department of Transportation, 800 Independence Avenue, SW., Washington, DC 20591. Persons wishing to receive acknowledgment of receipt of their comments should include a self-addressed, stamped postcard. Copies of materials relevant to this rulemaking, including copies of all public comments, are kept by the Rules Docket Technician, Room 915G, at the above address. The docket is available for inspection between 8:30 a.m. and 5 p.m., Monday through Friday, excluding Federal holidays.

FOR FURTHER INFORMATION CONTACT: Ms. Esta M. Rosenberg, Attorney-Advior, Regulations Division, Office of the Chief Counsel, Federal Aviation Administration, U.S. Department of Transportation, (202) 366–9305.

SUPPLEMENTARY INFORMATION:

Background

The Commercial Space Launch Act of 1984, as amended (the Act), 49 U.S.C. App. 2601–2623, codified, at 49 U.S.C. Subtitle IX, Commercial Space Transportation, ch. 701, Commercial Space Launch Activities, 49 U.S.C. 70101–70119, authorizes the Secretary of Transportation to license and regulate commercial space launches and the commercial operation of launch sites carried out within the United States or by its citizens. Among the stated purposes of the Act are protection of public health and safety, safety of property, and United States national security and foreign policy interests, as well as ensuring compliance with international treaty obligations of the United States. In carrying out the Act, the Secretary is required to encourage, promote, and facilitate private sector launch activities. Another objective is to facilitate development of a commercial space transportation sector that is capable of competing in the international market. The Secretary's responsibilities under the Act are carried out by the Associate Administrator for Commercial Space Transportation of the Federal Aviation Administration (Office). Prior to Fiscal Year 1996, the Secretary's responsibilies were carried out by the Office of Commercial Space Transportation, located within the Office of the Secretary of the Department of Transportation (DOT or Department). The Commercial Space Transportation Licensing Regulations set forth in 14 CFR Ch. III remain applicable to regulatory activities administered by the Office.

Current Industry Status

The commercial space industry is expanding and experiencing reinvigorated growth with the creation of new technologies and markets. U.S. commercial space revenues are estimated at $6.5 billion for 1994 and prospects are positive for continued growth. As a July 15, 1996, 63 DOT-licensed launches that have taken place since the first license was issued in 1998. Up to three big low earth orbit (LEO) telecommunications systems and two little LEO systems are projected for launch this decade, resulting in as many as 40 launches and 275 small satellites. Many other systems requiring additional launches are being planned and may increase projected launch rates.

The U.S. commercial launch industry is responding to increasing demands and heightened international competition with new launch concepts and innovative partnerships. In addition to conventional suborbital and orbital launches of expendable launch vehicles (ELVs) from earth to space, the Office has licensed launches involving a variety of innovative space transportation technologies including air-launched rockets and a reentry vehicle system. The Office has also begun discussions with industry on approaches to evaluating new reusable launch vehicle and sea-launch technologies. Currently, the private sector is conducting launch activities at four Federal launch ranges throughout the United States. Five States—Alaska, California, Florida, New Mexico, and Virginia—have plans under way for developing state-sponsored spaceports.

Evolution of U.S. Commercial Space Transportation Policy.

The first ten years of the U.S. commercial launch industry have been a period of transformation, informed by national policy and world events.

After passage of the Commercial Space Launch Act of 1984, the Government instituted policy and legislative initiatives encouraging commercial launches. Nevertheless, during this time, in the face of competing federal policies favoring maximum use of NASA's Space Transportation System and relatively low launch prices for services offered by the European launch operator, Arianespace, the U.S. private sector appeared reluctant to commit the resources necessary to compete for the relatively few launches of commercial satellites then available in the international market.

The commercial launch services market was altered dramatically in 1986 with the loss of the Space Shuttle Challenger. This event caused the United States Government to reverse its policy of reducing reliance on ELVs in favor of the Shuttle. On August 15, 1986, President Reagan announced a new United States Space Launch Strategy stating that NASA would ''no longer be in the business of launching private satellites,'' and that the government would be looking to the private sector to ''become a highly competitive method of launching

commercial satellites'' and ''clear[ing] away the backlog that has built up during this time when our shuttles are being modified.''

This decision removed the United States Government from direct competition with private launch services providers and, because the Challenger accident resulted in a backlog of payloads to be launched provided a potential market for U.S. launch firms. Shortly thereafter, the President initiated a comprehensive review of existing space policy for the purpose of providing a clear, unified statement of policy goals and directives.

On February 11, 1988, President Reagan issued a directive on National Space Policy that consolidated and updated previous Presidential guidance on space activities. The National Space Policy recognized for the first time a distinct commercial space sector, alongside the military and civilian government sectors, as an integral part of an overall national effort to maintain United States space leadership. Concurrent with release of the National Space Policy, the Administration announced a fifteen-point Commercial Space Initiative that reinforced one of the principal objectives of the Act: The promotion of a robust commercial launch industry. This objective was to be accomplished by, among other things, instituting a more equitable allocation of risk between the Government and private sector for commercial launch activities at Government ranges. This provision of the initiative consisted of two elements: A United States Government waiver of claims of property damage to Government property in excess of DOT-required insurance; and a United States Government waiver of claims covered on DOT-required insurance when loss of injury results from Government willful misconduct or recklessness.

Taken together, these policy initiatives created an environment that became more conductive to private investment in and business commitments to commercial space launch activities, and Federal agencies responded accordingly. Agencies operating United States Government launch facilities developed range support agreements to provide for commercial use of Government launch property and services in accordance with the Act. On April 4, 1988, the Office published DOT's Commercial Space Transportation Licensing Regulations, 14 CFR Ch. III, and on June 22, 1988, issued the first of 33 licenses issued to date.

Policy guidance supplementing the National Space Policy has been formulated to encourage further growth of private sector space activities. Most recently, on August 4, 1994, President Clinton announced a new National Space Transportation Policy reaffirming the Government's commitment to the commercial space transportation industry and the Department's critical role in licensing, facilitating and promoting commercial launch operations. Under this Policy, the Department, along with the Department of Commerce and other agencies as appropriate, is charged with developing an implementation plan focusing on measures to foster an internationally competitive U.S. launch capability. The Department also ensures that U.S. Government space technology plans address commercial space launch sector needs.

The 1988 Amendments

General

The Commercial Space Launch Act Amendments of 1988, Public Law 100–657 (1988 Amendments), replaced very general insurance requirements with a detailed, comprehensive financial responsibility and allocation of risk regime for commercial launch activities, including a more explicit exposition of the United States Government's risk-related rights and obligations. Reaffirmed, as part of the 1988 Amendments, is the Department's responsibility to protect United States interests when Government property or personnel is involved in supporting licensed activities.

The principal features of the regime include risk-based insurance requirements, limited Government payment of certain third-party claims, and reciprocal waivers of liability among launch participants. Participants in licensed launch activities are protected from potentially unlimited liability by: (1) requiring the licensee to provide insurance (or otherwise demonstrate financial responsibility) based on maximum probable loss determinations that: (a) protects launch participants, including the United States Government, from third-party liability (in an amount not exceeding the lesser of $500 million or the maximum available on the world market at reasonable cost) (49 U.S.C. 70112(a)), and (b) compensates for damage or loss to United States Government property (in an amount not exceeding $100 million) (49 U.S.C. 70112(a)); and (2) providing for payment by the United States Government of successful third-party claims up to $1.5 billion in excess of the required amount of third-party liability insurance, subject to enactment by Congress of an appropriations law or other legislative authority (49 U.S.C. 70113(a)(1)). In addition, the goal of allocating risks and costs associated with licensed activities is met by requiring participants to enter into reciprocal waivers of claims in which each party absorbs certain losses it may sustain as a result of licensed activities. 49 U.S.C. 70112(b). Taken together, these provisions are intended to achieve a fair allocation among the various parties, including the United States Government, of the risks attendant to their involvement in commercial launch activities.

The Office has been implementing the financial responsibility and allocation of risk provisions of the 1988 Amendments on a case-by-case basis, consistent with the adjudicatory process established by the Office in the Commercial Space Transportation Licensing Regulations, 14 CFR Ch. III. Since early 1989, when the first license was issued after the 1988 Amendments became effective, licenses have included a license order devoted entirely to insurance and other financial responsibility requirements that must be satisfied as conditions of each license. As of July 15, 1996, 63 launches have been conducted pursuant to these requirements. As a result of this experience, the Office believes that many provisions included in license orders may be standardized in rules of general applicability. The specific amounts of required insurance would be set forth in a license order.

Although requirements would be standardized, licensees may ask for relief from a particular regulatory requirement by petitioning the Associate Administrator for Commercial Space Transportation using the procedures set forth in § 404.3 of the Commercial Space Transportation Licensing Regulations (14 CFR § 404.3).

Allocation of Risk and Payment of Excess Claims Provisions

The 1988 Amendments focus on two areas of risk allocation: (1) Protecting the commercial launch industry against catastrophic losses from third-party liability claims; and (2) limiting possible claims among launch participants. At the same time, the 1988 Amendments are directed at minimizing the potential liability of the United States as a launching state under international law; and protecting the United States Government, including its agencies, personnel and contractors, from liability, loss of injury resulting from the Government's participation in commercial launch activities by providing launch support to commercial launch services providers.

This effort to insulate the United States Government and its agencies, personnel and contractors involved in DOT-licensed launch activities from a significant measure of exposure to liability, loss or injury resulting from licensed activities is important because of the Government's liability exposure. This exposure derives from two sources. Under international treaty, especially the Treaty on Principles Governing the Activities of States in the Exploration and Use of Outer Space, including the Moon and Other Celestial Bodies (Outer Space Treaty) (entered into force October 1967), and the Convention on International Liability for Damage Caused by Space Objects (Liability Convention) (entered into force September 1972), the United States Government has accepted certain obligations to compensate parties outside the United States for damage, including personal injury and loss of life, caused by space objects launched from the United States or by persons or entities whose activities are supervised or overseen by the United States Government. In addition, when the Government is involved in private sector launch activities through use of its property, facilities, equipment or personnel to support and facilitate those activities, the United States Government risks damage or injury to its own property and personnel and legal liability for other losses. It is the Office's view that, under the 1988 Amendments, risk for these losses should be allocated primarily to the nongovernmental launch participants, subject to three important exceptions, and the statutory requirements for insurance and waivers of claims must be construed and implemented to effect this allocation of risk. (The term ''nongovernmental'' is used throughout this discussion to mean launch participants other than U.S. Government, its agencies, contractors and subcontractors, and the employees of each.)

The three important exceptions are those risks that the U.S. Government affirmatively accepts under the Act. They are: (1) The risk otherwise borne by the U.S. commercial launch industry of catastrophic losses and unlimited liability associated with commercial launch activities, up to the statutory limit of $1.5 billion above required third-party liability insurance, subject to enactment of legislation, 49 U.S.C. 70113(a); (2) the risk of property damage or loss to United States Government launch property or facilities in excess of required insurance, 49 U.S.C. 70112(b)(2); and (3) acceptance of liability for death, bodily injury or property damage or loss that results from the willful misconduct of the United States Government or its agents, 49 U.S.C. 70112(e).

The Office believes that acceptance of these risks by the United States Government is necessary in order to accomplish the goals underlying the 1988 Amendments; that is for the U.S. commercial launch industry to compete effectively against foreign launch services providers that offer certain financial assurances from their governments,[1] and to limit the amount of liability insurance that must be obtained to protect launch participants without, in industry's words, their ''betting the company'' on each launch.

Not surprisingly, the linchpin of the allocation of risk regime in industry's view has been the United States Government's agreement to protect launch participants against the risk of catastrophic losses and unlimited liability associated with commercial launch activities. Pursuant to the 1988 Amendments, the Department seeks to provide this protection, or so-called ''indemnification,'' by preparing a compensation plan that the President submits to Congress for review and approval, and, if necessary, enactment of additional legislative authority providing for the payment of claims.

Significantly, the 1988 Amendments do not expressly mandate indemnification of launch participants and, unlike the 1988 Price-Anderson Amendments. Pub. L. 100–408, the notion of a ''contract of indemnification'' does not appear. Rather the 1988 Amendments lay out a mechanism by which Congress may enact legislation to appropriate the requested funds. Accordingly, it would be inappropriate to refer to the payment of excess claims provisions without recognizing the role Congress must play in enacting appropriations. Nevertheless, it is the Office's view that the 1988 Amendments represent an undertaking by Congress to allocate to the United States Government the risk of certain losses, including damage to Government property in excess of required Government property insurance, and excess third-party claims. In this manner, commercial launch operators, their customers, and the contractors and subcontractors of each may be relieved from some of the risk associated with commercial launch activities. In return, the United States Government is protected from liability and loss by required insurance at no cost to the Government

Risk-Based Insurance Requirements

One of the principal features of the 1988 Amendments is the Department's mandate to establish risk-based insurance requirements. Under the Act, the amount of required insurance is prescribed based on the Department's determination of the ''maximum probable loss'' that would result from licensed activities.

Before enactment of the 1988 Amendments, section 16 of the Act prescribed general liability insurance requirements. It specified that any person launching a launch vehicle or operating a launch site under a license issued by the Department have in effect liability insurance, at least in the amount that the Department considered necessary for the licensed launch or operation, considering the international obligations of the United States.[2] These obligations include, in particular, any United States obligations as a signatory to the Liability Convention.

On May 7, 1985, the Office published an Advance Notice of Proposed Rulemaking on third-party liability insurance requirements for commercial space launch activities (the ANPRM), 50 FR 19280, focusing exclusively on implementation issues relating to section 16 of the Act.

The ANPRM reflected the Office's conclusion that liability insurance should be adequate to compensate parties not participating in licensed launch activities for losses or damages resulting from those activities. The Office sought to identify considerations other than international obligations of the United States to be taken into account. Other general issues highlighted in the ANPRM were: (1) Whether evidence of insurance (including significant levels of risk retention) should be the exclusive

[1] At the time the 1988 Amendments were enacted, entrants to the commercial launch industry expressed deep concern over potentially open-ended exposure to liability for damages associated with launch activities that could undermine the position of United States firms vis-a-vis their foreign competitors. For example, while customers of Arianespace benefited from full indemnification by the French Government for all third-party liability that exceeded required insurance levels of 400 million French francs (approximately $65 million in 1988), corresponding protection was not available to customers of emerging commercial launch services providers in the United States. Consequently, from a commercial perspective, foreign launch services providers possessed a significant competitive advantage over U.S. firms.

[2] Each person who launches a launch vehicle or operates a launch site under a license issued or transferred under this Act shall have in effect liability insurance at least in such amount as is considered by the Secretary to be necessary for such launch or operation, considering the international obligations of the United States. The Secretary shall prescribe such amount after consultation with the Attorney General and other appropriate agencies.'' 49 U.S.C. App. 2615.

means of demonstrating financial responsibility; and (2) whether the Office should require launch services providers to obtain the maximum amount of liability insurance commercially available at reasonable rates (the standard employed by NASA in requiring insurance for commercial payloads launched on the Space Shuttle), or, alternatively, whether the Office should conduct an analysis of the risks arising from a launch and set appropriate financial responsibility requirements based upon that analysis. The ANPRM also sought comments on whether the Office should vary liability insurance requirements by vehicle class and the duration of licensed activities, and what factors the United States Government should consider in deciding whether to seek compensation from responsible parties for damages for which the United States may be held liable under United States or international law.

Ten private parties submitted comments in response to the ANPRM. They included one commercial operator of a privatized United States expendable launch vehicle (ELV) launch system, three entrepreneurial launch firms, two space insurance brokers, two government aerospace contractors, and two law students.

Most of the comments addressed the amount of liability insurance the Office should require and the appropriate standard for making that determination. Only three of the commenters, the insurance brokers and an entrepreneurial launch services provider, supported utilization of NASA's approach of requiring that launch services providers obtain the maximum amount of insurance commercially available at reasonable rates. One insurance broker favored applying this standard to the actual launch phase only, arguing that risk analysis should be employed in setting requirements for on-orbit liability coverage. All of the other launch and aerospace firms that commented favored the risk analysis approach.

Commenters differed on the issue of duration of required insurance coverage. One commenter favored requiring coverage only for the launch phase, another preferred the useful life of a payload, and a third recommended insurance be maintained as long as a physical object remains in space. Only two commenters addressed the question of whether the Office should distinguish among the different ELV launch systems in setting third-party liability insurance requirements, both favoring making such distinctions if justified by risk analysis. In addition to the issues on which the ANPRM requested comment, five commenters argued that the United States Government should indemnify private launch firms and their contractors for damages that exceed the amount of required coverage. One commenter urged that the United States either re-interpret its responsibilities under, or withdraw from, the Liability Convention.

Following publication of the ANPRM, and in light of most commenters' endorsement of insurance requirements based on an analysis of risk, the Office developed a risk analysis approach to determining acceptable levels of public exposure to hazards associated with commercial launches, and it began applying risk analysis techniques on an application-specific basis. The Office's risk analysis approach was based upon extensive studies it had conducted on the risks associated with commercial launches and launch operations, and on the utility of various analytical techniques for quantifying them. These studies include a three-volume report, dated May 1988, entitled ''Hazard Analysis of Commercial Space Transportation'' and an ''Assessment of Third Party Liability Insurance Associated with Commercial Expendable Launch Vehicles,'' each of which is available from the Office.

At the time the 1988 Amendments were enacted, the Office was preparing a rulemaking action to establish risk analysis as the preferred method for determining appropriate levels of insurance for licensed activities. The need to propose adoption of this approach became moot. In requiring maximum probable loss determinations, Congress effectively codified the Office's approach by mandating risk analysis as the basis on which the Department establishes required levels of financial responsibility under the Act.

This rulemaking is intended to provide definition to the statutory term, ''maximum probable loss,'' in terms of the Office's approach to prescribing insurance requirements for each launch license issued. ''Maximum probable loss'' does not mean maximum possible loss, that is, a ''worst case'' scenario regardless of likelihood. The Office determines maximum probable loss for licensed launch activities by analyzing the known hazards, and the probability of loss, associated with specific launch activities. A detailed explanation of maximum probable loss methodology is presented in the section-by-section analysis below.

Implementation Issues Following the 1988 Amendments

In early 1989, the Risk Management Working Group of the Commercial Space Transportation Advisory Committee (COMSTAC)[3] developed implementation positions on the 1988 Amendments, including a recommendation that the scope of required liability insurance coverage be commensurate with the scope of potential liability of those persons involved in providing launch services—the licensee, its customer, the U.S. Government, and the contractors and subcontractors of each—resulting from activities carried out under the license. In its view, potential liability arose with the licensee's entry upon the launch complex. Additionally, the waiver of claims provisions and the so-called ''indemnification'' provisions of the Act were viewed as being equally broad in scope. The COMSTAC further recommended that post-launch protection under the Act remain in place for at least three years following ignition of the launch vehicle for flight.

In carrying out its licensing responsibilities, the Office began issuing licenses in 1989, authorizing a specific launch and preparatory launch site operations associated with the conduct of that launch. This approach was intended to satisfy industry's expectations, including those voiced by COMSTAC, and be consistent with the Department's understanding of the 1988 Amendments. Within two years, the Office issued the first of several operator licenses issued to date. Under this approach, the Office licensed and established financial responsibility requirements for site operations associated with the conduct of a program of commercial launches for a two-year period.

This approach to licensing reflected an understanding between the Office and the U.S. Air Force, as the Department of Defense (DOD) element responsible for management of the Eastern Range, encompassing Cape Canaveral Air Station, and the Western Range, encompassing Vandenberg Air Force Base, to avoid conflicting insurance and liability requirements when commercial launch operators

[3] The COMSTAC, a duly chartered federal advisory committee consisting of public and private sector representatives appointed by the Secretary to advise on matters affecting the commercial space transportation industry, has taken a very active role in reviewing and commenting on the Office's implementation of the 1988 Amendments. Based on its reviews, the COMSTAC submitted formal recommendations to the Secretary. These recommendations are available in the docket for this proposed rulemaking.

conduct operations on Air Force ranges in support of commercial launch activities under a range use agreement. Despite this understanding with the Air Force, certain questions remain between the Office and the Air Force as well as other Federal agencies that operate and manage Federal range facilities.

A September 1992 COMSTAC resolution reaffirmed COMSTAC's view that the financial responsibility regime should be construed broadly so as to cover all activities conducted by a licensee on a Federal range. Under this view, referred to as ''gate-to-gate'' licensing, all of a licensee's activities conducted on a Federal range in support of its commercial launch operations would be subject to DOT-determined financial responsibility requirements and eligibility for so-called indemnification. To address this and other uncertainties associated with the intended scope of the 1988 Amendments, the resolution recommended that the Department seek clarification by legislative means.

October 27–28, 1994 Public Meeting

The Office convened a two-day public meeting on October 27–28, 1994, to elicit industry views on, among other things, a range of issues associated with implementation of the 1988 Amendments. The meeting concentrated on licensing issues associated with commercial launch operations and the commercial operation of launch sites. One of the focal points of the meeting was a discussion of the appropriate scope of a license authorizing commercial launch activities and its relationship to financial responsibility and allocation of risk requirements.

At the public meeting and in written comments submitted to the docket, industry remained fairly consistent in its view that the Office's licensing authority should be broadly construed to address risks associated with the flight of a launch vehicle and pre-flight hazardous operations in order to protect public health and safety. One commenter suggested that, as a starting point, it would be useful to look at those unusually hazardous activities for which the Government agrees to offer indemnification under other authority, such as Public Law 85–804, in attempting to determine the range of activities properly encompassed by the Department's licensing authority.

Two launch services providers and one DOD element commented that all pre-launch processing on a Federal range should be licensed for purposes of the Act's financial responsibility requirements and setting the levels of required insurance. Other commenters observed that it is no longer sufficient to limit DOT licensing to activities done on a Federal range because, increasingly, launch operators are engaging in hazardous pre-launch processing activities off the range, either to reduce their costs or because they are not permitted to use Government facilities where comparable, off-range commercial services exist. A number of commenters, including a DOD element, an insurance broker, a prospective commercial spaceport operator and two launch services providers, suggested that DOT-licensed activities should include hazardous, as distinct from ultra-hazardous, operations defined in terms of risk, not geography, because the Office's mandate is protection of public safety. The prospective spaceport operator also suggested using the license as a kind of safety net to avoid gaps in regulatory oversight. In contrast, another Government agency representative offered a different approach, noting that other regulatory regimes would apply to hazardous operations when conducted somewhere other than at a Federal range.

As an example of hazardous operations requiring licensing, a number of commenters, including a payload processing facility, stated that payload processing, whether conducted on a Federal range or at a privately operated facility located off the Federal range, should be covered by a DOT license. One launch company noted that manufacturing is not sufficiently hazardous as to warrant DOT licensing, but certain testing is. However, a prospective spaceport operator noted that manufacturing may be hazardous and, if so, should be covered by a DOT license. Another prospective spaceport operator stated that licensing matters should be separated from the issue of indemnification altogether, and noted that one could conceive of licensed activity without indemnification if the purpose of licensing is protection of public safety. The commenter suggested a narrower approach than that of licensing all activities conducted by a launch licensee on a Federal range, noting that material may be stored at the range for a long time in advance of a scheduled launch.

Two DOD elements advocated that the Office establish maximum probable loss requirements for all commercial activities conducted on a Federal range facility. One of the agencies also indicated that the Office should set maximum probable loss requirements any time Government property would be placed at risk for commercial purposes, including coverage for commercial development and demonstration activities conducted on a Federal range.

One launch services provider noted the benefits to the public of requiring statutory financial responsibility and allocation of risk requirements, along with so-called indemnification, in that third-party recovery for losses need not depend upon the financial health of a launch company. For example, without Government regulation, small start-up companies with limited financial means might buy less insurance than the Office would otherwise prescribe in insurance requirements.

Another launch services provider noted that the financial responsibility requirements should be coextensive with a license. That is, the Government should provide indemnification to the extent activities are covered by a license. Likewise, according to the launch services provider, if there is no indemnification offered by the Government for an activity then it can be inferred that the Office has not licensed that activity. The commenter noted that this is not clear today.

In a related rulemaking, the Office is planning to address, more specifically, such issues as the appropriate scope of a license to conduct commercial launches and the activities subject to the Department's licensing authority. As part of that rulemaking, the Office intends to address comprehensively those comments received at the public meeting concerning the appropriate scope of a license and licensable activities. The instant rulemaking focuses on implementation of financial responsibility requirements and the allocation of risks that attend licensed launch activities, as those activities are defined in a license issued by the Office.

The Proposed Regulations

Scope and Objectives

The proposed regulations are intended to implement the full range of statutorily-imposed financial responsibility requirements and carry out the Department's responsibility under the Act to protect U.S. interests when Government property or personnel is involved in supporting licensed launch activities. The proposed regulations also clarify the means by which the commercial launch industry and its customers are provided with the assurances and protections that have been considered critical to their survival.

This rulemaking does not address financial responsibility requirements for the operation of a launch site. To date, all U.S. commercial launches have taken place from U.S. Government facilities.

The Office believes that this fact will change in the not too distant future. Plans for developing state-sponsored spaceports in five states are under way and the Office is currently developing regulations that would apply to prospective applicants for licenses to operate launch sites or spaceports. The Office is also in the process of developing policies applicable to the appropriate implementation of financial responsibility requirements for launch site operators, including spaceports, consistent with the Act. As part of this effort, the Office requests comments on the full range of financial responsibility and risk allocation issues associated with licensing the operation of a launch site.

More specifically, under the Act, a licensee is required to obtain two forms of insurance (or otherwise demonstrate financial responsibility) to compensate for certain claims ''resulting from an activity carried out under the license''—liability insurance that protects participants in launch services from third-party liability and property insurance that protects Government property. 49 U.S.C. 70112(a). No distinction is made in the Act between the holder of a license to launch a launch vehicle and the holder of a license to operate a launch site. As one commenter pointed out at the October 1994 public meeting, the legislative history accompanying the 1988 Amendments provides no guidance as to whether, or how, financial responsibility and allocation of risk requirements would apply to a licensed operator of a launch site.

One view under consideration by the Office is that the insurance that is required under a license to conduct licensed launch activities would be sufficient to protect United States interests as well as those of a licensed launch site operator. This view presumes that the potentially catastrophic risks that the 1988 Amendments intended to address are those associated with hazardous launch operations, and that the risks attendant to the industrial activity of managing a launch site can be managed effectively through available industrial risk insurance as a cost of doing business, and through contractual agreements between the site operator and its customers and contractors. Risks to the launch site operator change when licensed launch activities are conducted at the site, and the launch site operator should be protected as an additional insured under the launch licensee's liability policy because of the launch site operator's involvement in launch services. With respect to risks associated with other activities, a launch site operator can protect itself by requiring adherence to its own safety procedures and requirements and through business decisions regarding the need to obtain insurance.

At the public meeting, one commenter representing a prospective spaceport licensee suggested an approach consistent with this view. The commenter noted that site operations not related to a particular launch may not be covered by the Act, and that the launch operator and launch site operator, rather than the Office, can allocate responsibilities between themselves. Launch-specific activities carried out at the site would be covered under the Act, in the commenter's view. However, another commenter at the public meeting noted that a state-sponsored spaceport could serve a consortium of commercial users, and the relationship between them may not be one of prime contractor and subcontractor. Another prospective state-sponsored spaceport representative commented that there is no need for the Office to license a spaceport operator if it is under the supervision and oversight of another Federal agency, such as the Air Force, and conducting operations as a subcontractor to the launch company. Similarly, a DOD element commented that the Office should review safety operations of a state-sponsored spaceport located on a Federal range facility only for purposes of determining maximum probable loss.

Additional comments are solicited on the appropriate implementation of the financial responsibility and allocation of risk regime with respect to licensed launch site operators, including state-sponsored spaceports. Comments should address the requirements that would apply to an operator of a commercial launch site located on private property and that located on or adjacent to a Federal range facility.

Implementation by the Office of the financial responsibility and allocation of risk requirements through license orders has resulted in some uncertainty and controversy over the scope of required insurance as well as the Government's obligation to cover excess third-party claims. Some issues result directly from the terminology used in the Act and have been voiced by both the Office and industry in a variety of fora, such as the October 1994 public meeting and COMSTAC meetings. Others have been aired by industry, from time to time, expressing disagreement with or concern over the Office's implementation of the requirements. In come instances, industry has offered a view contrary to that held by the Office, as reflected in license orders. In others, industry has complained that lack of clarity leaves both industry and the U.S. Government vulnerable to unintended disputes over the appropriate mechanism for compensating claims.

The proposed regulations, as well as the Act, acknowledge that the commercial space industry must bear certain risks and costs associated with launch activities. However, the Office believes these risks and costs to be reasonable in light of the potential benefits industry receives.[4] Moreover, the Office believes that issuing regulations will result in an additional benefit to the commercial space industry. That is, the increased certainty and clarity that will result from issuance of final regulations should prove beneficial to industry by allowing it to manage risks appropriately, through insurance and other business decisions and compete effectively in an increasingly competitive world market. At the same time, the Office remains mindful of the Government's unique interests and concerns.

In addition to protecting the United States Government from certain liability risks, this rulemaking proposal also recognizes the importance of valuable national range assets to the continued growth, vitality, viability and competitiveness of the U.S. commercial launch industry. One of the principal objectives of the statutory requirements is to ensure that these assets are protected, and that in the event of damage or loss, funds are available to restore the affected launch property to its present condition and use. Thus, when Government facilities or personnel are involved in licensed launch activities, the Department is authorized to establish requirements for proof of financial responsibility and other assurances necessary to protect the Government and its executive agencies and personnel from liability, death, bodily injury, or property damage or loss as a result of licensed activities. However, the Government is not relieved of liability that results from willful misconduct of the Government or its agents.

In protecting the interests of Government personnel, the statutory financial responsibility and allocation of risk requirements also recognize the role Government contractors and subcontractors, and their respective employees, perform in supporting commercial launch-related operations on Federal range facilities on behalf of

[4] An economic impact assessment has been prepared and is available in the public docket for this proposed rulemaking for review and comment.

the Government. For this reason, in establishing financial responsibility and allocation of risk requirements, the Department also ensures that their interests are protected. The Office solicits views on whether its approach to protecting Government contractors' and subcontractors' interests should be adopted in a final rule.

To facilitate the reader's review of this proposal, the Office's rationale for allocating and addressing certain risks is presented below under appropriate topic headings, preceding the section-by-section analysis. This approach should prove useful to the reader in understanding how certain risks would be addressed through both the required demonstration of financial responsibility and waivers of claims among the launch participants. The section-by-section analysis that follows describes and discusses specific provisions of the proposed implementing regulations which, taken together, effectuate the intent of the Act.

Protection of Government Personnel

In providing direct support for commercial launch operations, either through its agencies or contractors, the U.S. Government necessarily exposes itself and certain Government personnel to potential losses and liabilities. Accordingly, under the approach the Office has adopted in the proposed regulations, certain Government personnel need to be afforded a variety of protections through the financial responsibility and allocation of risk regime. These protections are necessary to ensure that the U.S. Government does not bear any greater risk than it affirmatively accepts under the statute.

Through the proposed regulations, risks to Government personnel, including employees of Government contractors and subcontractors, posed by their involvement in licensed launch activities are addressed as follows:

1. Government personnel, including employees of the Government, its agencies, and its contractors and subcontractors, involved in licensed launch activities, would be included within the definition of third parties.

2. Government personnel, including employees of the Government, its agencies, and its contractors and subcontractors, involved in licensed launch activities, would be named as additional insured under the required third-party liability policy.

3. Claims for damage or loss to property belonging to the Government, its agencies, contractors and subcontractors, involved in licensed launch activities, would be covered under the required Government property policy, *even if* the damage or loss is caused by Government personnel, including employees of the Government, its agencies, and its contractors and subcontractors, involved in licensed launch activities, absent their willful misconduct.

These three forms of protection from risk are explained below, in order.

1. The proposed regulations would clarify that Government employees are included within the definition of third parties. This is significant because it means that Government employees' claims for property damage or bodily injury would be compensated under the third-party liability insurance policy (or other demonstration of financial responsibility) required of the licensee up to the limit the Office establishes, within the statutory ceiling, based upon the Office's determination of maximum probable loss. (An explanation of the Office's risk-basing methodology for setting insurance requirements is set forth in the section-by-section analysis, below.)

The definition of third parties would also include employees of U.S. Government contractors and subcontractors involved in licensed launch activities to ensure that their claims would also be covered by the required third-party liability insurance policy, in accordance with the statue.

This approach is in accord with the definition of ''third party'' contained in the statute, 49 U.S.C. 70102(11), and the legislative history which expressly states that ''Government personnel directly associated with the commercial launch operations are still classified as third parties.'' S. Rep. No. 100–593, 100 Cong., 2d Sess. 8 (1988). This protection is necessary to minimize the risk the U.S. Government would otherwise bear if it were to accept responsibility for these claims under the Act.

Currently, through a reciprocal waiver of claims agreement executed by the Office on behalf of the U.S. Government, the United States waives and releases claims it may have against the licensee and customer and their respective contractors and subcontractors, and agrees to be responsible, for property damage it sustains in excess of required insurance, and for bodily injury or property damage sustained by its employees in excess of required insurance.[5] The Government is required to extend this waiver of claims and assumption of responsibility to its contractors and subcontractors. This practice would be altered under the proposed regulations in the following way. Because claims of Government employees and employees of Government contractors and subcontractors against the other launch participants would be covered as third-party claims under the liability insurance policy that the licensee obtains, the U.S. Government would not be required to assume responsibility for them as part of the reciprocal waiver of claims required in 49 U.S.C. 70112(b)(2). This approach deviates from the current practice of the Office but, we believe, more precisely reflects the intent of the statute.

Given that Government personnel are deemed third parties, their claims against the other launch participants would be presented as part of the successful third-party claims for which industry would seek payment from the Government under the payment of excess claims provision of the statute (so-called ''indemnification''). In essence, the Government's agreement to protect launch participants from third-party claims in excess of required insurance would extend to cover the outstanding claims of its employees, and Government contractor and subcontractor employees, after the limits of the insurance policy obtained by the licensee have been reached.

An alternative view—that Government personnel should not be considered third parties—has been suggested by representatives of the commercial space launch industry. This view suggests that the 1988 Amendments assigned to the United States Government an assumption of responsibility and risk for losses sustained by Government personnel, including Government employees and employees of Government contractors and subcontractors, who are involved in licensed activities. This assumption of risk would be in addition to the three areas of risk the Government has agreed to accept under the Act, as delineated above. The Office does not agree.

Considering Government personnel as third parties enables their claims to be covered by required third-party liability insurance under 49 U.S.C.

[5] The reciprocal waiver of claims agreement is used by the Office to implement the Government's statutory responsibility to waive claims. 49 U.S.C. 70112(b)(2) requires a Government waiver only to the extent claims exceed the amount of insurance that is required to protect Government property. However, under current practice, the agreement provides that claims for injury or losses suffered by employees of the Government are waived only to the extent those claims exceed the required amount of third-party liability insurance. One reason the Office has taken this approach is that if Government employee claims for bodily injury or property damage were compensated under the property policy rather than the liability policy, the Government's waiver of claims for property damage could be triggered too soon leaving Government claims for property damage or loss uncompensated.

70112(a)(3)(A)(i). Absent this protection for Government employees, the Government would be assuming an unfunded contingent liability for the successful claims of Government employees against other launch participants, without explicit statutory authority for doing so. This is contrary to appropriations laws. The Office does not believe that explicit statutory authority is provided by the Government waiver of claims provision of the Act, which limits the Government's waiver to excess property damage claims. 49 U.S.C. 70112(b)(2). Absent this protection for employees of Government contractors and subcontractors, additional costs to protect Government contractors and subcontractors from these risks would likely be passed to the Government, defeating the statutory directive to protect the Government from certain liability risks, at no cost to the Government.

In the Office's view, this approach is beneficial to both the U.S. Government and nongovernmental launch participants. Nongovernmental launch participants are protected from claims by Government personnel, including employees of the Government's contractors and subcontractors, for loss of injury, by means of required liability insurance and procedures for U.S. Government payment of excess third-party claims, up to $1.5 billion above the required amount of liability insurance. The U.S. Government is protected in the event its personnel, as well as those operating on behalf of the Government, are exposed to risk of property damage or bodily injury because their claims will be compensated under the liability policy the licensee obtains at no cost to the Government. Considering Government personnel as third parties is not intended to supplant the individual rights of Government employees to file claims under the Federal Employees' Compensation Act (FECA), or the rights of Government contractor employees under workers compensation laws.

2. Government personnel would be protected from third-party liability, absent their willful misconduct. The statute explicitly requires that the Government, ''executive agencies and personnel, contractors, and subcontractors of the Government'' be protected under an insurance policy required under section 70112(a), ''to the extent of their potential liability for involvement in launch services, at no cost of the Government.'' 49 U.S.C. 70112(a)(4). Therefore, under the liability policy, Government personnel are both protected parties, or additional insureds, and potential claimants.

3. Under the property policy required under 49 U.S.C. 70112(a)(1)(B), United States Government property is protected from damage from any source as a result of licensed activities, that is, even if the damage is caused by Government personnel, absent their willful misconduct.

Property Protection for Government Launch Participants

In addition to protection from third-party liability, as explained above, Government launch participants are protected from the risk of their own property losses where their property, facilities, equipment or personnel, are used to support commercial launch operations. In the Office's view, this risk is allocated primarily to the licensee, who is required under 49 U.S.C. 70112(a)(1)(B) to obtain liability insurance (or otherwise demonstrate financial responsibility), up to the $100 million statutory ceiling, to compensate for the maximum probable loss from claims by the U.S. Government against a person for damage or loss to Government property resulting from an activity carried out under the license. The Government waives claims for property damage to the extent those claims exceed the required amount of insurance or result from willful misconduct of the government or its agents.

This requirement to protect Government property addresses an important objective—to assure that facilities used by commercial launch operators can be restored promptly to current launch-ready status. These facilities are considered critical to U.S. national security interests and funds must be readily available to repair them in the event they are damaged as a result of commercial launch activities.

Two recurring issues are the scope of Governmental property that must be protected by property insurance and the extent to which Government property that is either on a Federal range but not used to support a licensee's launch, or off the Federal range entirely, is required to be covered by insurance. Government property on a Federal range that is not used for commercial launch support purposes may include anything from a U.S. Post Office to launch vehicles or components that are intended for use exclusively in Government launch operations.

The Office's view is that *any* U.S. Government property that is on a Federal range facility is exposed to damage or loss as a result of licensed launch activities conducted on that facility. Accordingly, coverage for all such property must be provided to ensure the U.S. Government is fully compensated. The only exception would be for a Government payload where the Government is the customer for the licensed launch activity. (A discussion of how different types of Government property on a Federal range facility are considered in establishing insurance requirements for Government property is presented in the section-by-section analysis accompanying proposed § 440.7, Determination of Maximum Probable Loss.)

It is also the Office's view that Government range facility assets that are not on the launch facility from which the launch takes place, but are identified as being exposed to damage or loss as a result of licensed launch activities, should also be covered by the required property insurance. For example, a licensed launch at Cape Canaveral Air Station, Florida, could expose Government assets on neighboring Kennedy Space Center (KSC) to damage or loss. Under the proposed regulations, the Office would include these assets in determining appropriate insurance levels for Government property and prescribe that property at KSC be covered. The Office believes that this approach is necessary and reasonable to carry out the statutory mandate of protecting Government range assets exposed to risk from commercial launch activities. Similarly, a licensed launch conducted at a commercially operated launch site or spaceport situated on, or adjacent to, a Federal range facility, would expose the Federal range facility to risk of damage or loss. Accordingly, insurance to protect the Federal range facility placed at risk would be required even if there were no Government involvement in supporting licensed launch activities conducted at the commercial launch site.

In the Office's view, Government property that is involved in licensed launch activities but is located at a site that is remote from the launch site would be covered by the third-party liability insurance protection required of the licensee because risk to that property should be no greater than the risk posed to other third-party property. Government property meeting this description would include, for example, remote Government tracking stations and other support facilities located downrange from the Federal range facility at which the launch takes place.

Accordingly, Government property that is not located on the Federal range facility from which the launch takes place or not located at a neighboring

Federal range facility would be included under the third-party liability insurance protection required of the licensee. This would include any unrelated Government property located outside of a Federal range facility, such as a U.S. Post Office building.

It has been suggested that the additional cost of covering all Government property, wherever located, would be prohibitive. However, the Office views the U.S. Government as situated similarly to any other third party for purposes of calculating maximum probable loss for property damage claims off the range, subject to the limited exception noted above for nearly Federal range facility assets located in close proximity to, or adjacent to, a Federal range. This is because the probability of damaging unrelated government property away from the launch site is no different from that of damaging private property off the launch site. The Office does not believe that this coverage should increase the cost of liability insurance or expand the risks covered by the policy.

In summary, all Government property on a Federal range facility, whether or not involved in licensed launch activities, must be covered by the required Government property insurance policy (or other demonstration of financial responsibility). Federal range facility assets adjacent to or in close proximity to the launch site where licensed launch activities take place would also be covered by required property insurance. Government property located away from the Federal range facility that is used to support licensed launch activities, such as downrange tracking stations, are not covered by the required Government property insurance policy, nor is Government property that is located off the Federal range facility and totally unrelated to licensed launch activities. Instead, with respect to these Government assets, the Government is a third party and its claims for loss or damage would be covered under the required third-party liability insurance policy (of other demonstration of financial responsibility), up to the limits required by the Office.

Some of the confusion surrounding the required coverage of Government property results from the manner in which licensees have satisfied the financial responsibility requirements for protecting Government property. Some licensees have obtained two types of policies to address Government property. One policy typically provides coverage for United States Government property, including property of United States Government contractors and subcontractors, that the licensee utilizes or otherwise has in its care, custody or control at the site where licensed launch activities take place. The second policy provides third-party liability coverage for all other property, including Government property located elsewhere on the Federal range facility. In the first policy, the United States and its contractors and subcontractors are the named insureds; in the second policy, the additional insureds are the same parties as those protected in satisfying the third-party liability insurance requirement. This approach accommodates certain customary insurance practices in covering property losses but is not required by the Office.

However, where a licensee elects to protect certain Government property under its third-party liability insurance policy, coverage cannot be allowed to limit or dilute the availability of insurance proceeds to cover third-party liability claims. To avoid this possibility, some licensees have submitted a liability insurance certificate indicating two levels of coverage, *i.e.*, one amount to cover claims for damage to Government property that is not in the licensee's care, custody or control and another amount for ''other' third-party liability, claims.

The proposed regulations would continue the Office's current practice, implemented through license orders, of requiring coverage for property of Government contractors and subcontractors under the Government property policy. The Office's rationale for doing so includes the following considerations. Absent certain protections for Government contractors and subcontractors, the Government would bear greater risk and incur greater expense than is contemplated under the statute's risk and incur greater expense than is contemplated under the statute's risk allocation regime. Section 70112(b)(2) of the Act requires the Secretary of Transportation to enter into reciprocal waivers of claims under the licensee, its customer, and the contractors and subcontractors of each, ''for the Government, executive agencies of the Government involved in launch services, and contractors and subcontractors involved in launch services. * * *'' The waiver applies only to the extent that claims are more than the amount of Government property insurance or other demonstration of financial responsibility required under 49 U.S.C. 70112(a)(1)(B). By waiving claims ''for'' its contractors and subcontractors involved in launch services, the Government passes certain rights and responsibilities to its contractors and subcontractors, consistent with those the Government accepts, including the waiver of claims for property damage above required insurance. In light of the waiver the Government undertakes on behalf of its contractors, the Government would necessarily assume greater risk or costs if the Government's contractors and subcontractors were not also protected by required Government property insurance. If there were no insurance protection provided by the licensee for property of Government contractors and subcontractors involved in launch services, those parties would be likely to seek compensation for their losses from the Government. Thus, the Government would be accepting the risk of property losses in excess of required insurance, *plus*, ad a practical matter, responsibility for property losses incurred by its contractors and subcontractors. Alternatively, Government contractors and subcontractors could purchase property insurance protection, as a licensee has suggested; however, the cost would likely be passed through to the Government as an allowable cost under a contract with the Government. This is contrary to the statutory directive that the Government be afforded certain protections at no cost to the Government.

In determining to adopt this approach in the proposed regulation, the Office also considered whether coverage for property of Government contractors and subcontractors could be provided under the third-party liability insurance protection the licensee is required to obtain. This approach is contrary to the definition of ''third party'' contained in the statute at 49 U.S.C. 70102(11) and was not further considered.

There is one important distinction in the requirement to protect property of Government contractors and subcontractors in the Office's view, however. That is, with respect to the Government and its agencies, all Government property on a Federal range facility must be protected. With respect to Government contractors and subcontractors, only property on a Federal range facility belonging to those contractors and subcontractors involved in licensed launch activities must be covered under the property policy. Government contractors and subcontractors that do not support licensed launched activities or whose property is located away from a Federal range facility would be protected as third parties under the liability policy, and their claims for injury, damage or loss would be compensated by the required third-party liability policy. For

example, a food concessionnaire located on a Federal range facility would be considered a third party for purposes of insurance and risk allocation.

One licensee has noted its disagreement with the Office's requirement. In the licensee's view, requiring this coverage is contrary to the statute and legislative history. The licensee has sought clarification of the Office's requirements to avoid the potential for duplicative, or possibly unnecessary, coverage under the liability and property policies.

The Office disagrees with the licensee's contention for the reasons explained above. The U.S. Government utilizes contractors and subcontractors in carrying out certain activities at Federal range facilities. Accordingly, for purposes of risk allocation and protection of the U.S. Government, its contractors and subcontractors stand in the shoes of the Government and its agencies involved in launch services. The Office believes that any other view would defeat reasonable implementation of the Amendments.

The Office believes that a variety of risk management approaches to protecting Government property may be acceptable as long as the statutory objectives are achieved; that is, providing for the compensation of property damage sustained by the United States, its agencies involved in launch services, and its contractors and subcontractors, resulting from activities carried out under the license and ensuring that policy proceeds will be made available to the Government to effect needed repairs in the event of any damage resulting from licensed launch activities. These objectives can best be met through a non-fault, non-subrogation, comprehensive all-risk type of property policy that would compensate the U.S. Government on behalf of itself and Government launch participants, as additional insureds, in the event of any occurrence resulting in property damage, regardless of fault, absent willful misconduct by the Government or its agents. In order to satisfy statutory objectives, the policy must respond to damage *caused by* Government launch participants, as well as Government personnel, *i.e.,* employees of the Government and its contractors and subcontractors. An exception may be allowed where insurance is not available because of a policy exclusion that is determined by the Secretary of Transportation to be usual for the type of insurance involved. In those instances, the Secretary, following consultation with other interested Federal agencies, may waive claims for property damage from the first dollar of loss. In all other circumstances, coverage must be provided to protect U.S. Government property from *any damage* incurred during or as a result of licensed launch activities, regardless of fault, absent willful misconduct by the Government or its agents.

Government Customer

When the licensee's customer is a United States Government agency, the agency is treated the same as any nongovernmental customer for purposes of determining the appropriate amount of property insurance required of the licensee and in terms of the U.S. Government's waiver of claims or property damage or less above the required amount of property insurance under 49 U.S.C. 70112(b)(2). That is, a Government payload is not covered by the required Government property insurance and the United States Government agency-customer accepts responsibility for property damage to the payload. For other purposes, the government agency customer is an agency of the United States involved in licensed activities. This is an important distinction because employees of a U.S. Government agency are third parties and their claims against other launch participants for bodily injury or property damage are covered by the third-party liability policy required under 49 U.S.C. 70112(a)(1)(A), even when the agency that employs them is involved in the launch as the customer. The basis for the Office's distinction is grounded in appropriations law. An agreement on the part of the United States Government to be responsible for claims of its employees for injury or damage from the first dollar of loss, other than employee claims compensated under FECA, would be an unfunded contingent liability which, in the Office's view, is not statutorily sanctioned. Rather, through statutorily-mandated insurance insurance protections, waiver of claims requirements and payment of excess claims provisions, Congress has limited the unfunded contingent liability the U.S. Government may accept. The Office believes its approach to protecting the U.S. Government when it is a customer of commercial launch services providers is consistent with the limit of risk the Government has agreed to accept under the statute.

To summarize the Office's view of the statutory allocation of risk regime, whereas nongovernmental parties involved in licensed launch activities accept responsibility for property damage or loss they sustain and for injury or loss sustained by their employees, the United States Government is covered on both accounts by insurance secured by the licensee. Should the loss exceed the amount of required insurance that a licensee has secured to cover such claims, then the Government assumes responsibility for loss of or damage to its property (and property of its contractors and subcontractors) in accordance with required reciprocal waivers of claims under 49 U.S.C. 70112(b)(2). Should the loss exceed the required insurance a licensee has secured to cover third-party liability, then the Government, in effect, assumes limited responsibility for losses above that amount sustained by Government personnel by agreeing to pay excess third-party claims. At the same time, nongovernmental parties are effectively protected from claims for Government property losses by required insurance and the Government's waiver of claims in excess of insurance; and from third-party claims, including claims of Government personnel, by required liability insurance and by procedures for U.S. Government payment of third-party claims up to $1.5 billion in excess of insurance.

Section-by-Section Analysis

Part 440, Subpart A—Financial Responsibility for Licensed Launch Activities

Section 440.1—Scope; Basis

Proposed § 440.1 identifies the activities to which the Office's proposed financial responsibility and allocation of risk requirements would apply as all commercial space launch activities that are authorized to be carried out under a launch issued by the Office.

Section 440.3—Definition

Section 440.3 defines terms used in part 440 that are not otherwise defined in 14 CFR Ch. III. Terms defined in § 401.5 of the Commercial Space Transportation Licensing Regulations have the same meaning for purposes of this part unless otherwise indicated. Some of the terms, as defined in the proposed regulation, are self-explanatory and required no additional elaboration. Other terms are discussed below.

The term ''contractors and subcontractors'' is defined in this section to address parties intended to be covered by the phrase ''contractors and subcontractors involved in launch services'' in 49 U.S.C. 70112 and 70113. This is important because these contractors and subcontractors have certain responsibilities and enjoy certain benefits under the statute relating specifically to the requirements

for insurance (or other form of financial responsibility), reciprocal waivers of claims and the U.S. Government's payment under certain circumstances of successful third party claims in excess of required liability insurance.

As used in the Act, the term ''contractors and subcontractors'' is generally modified by the phrase, ''involved in launch services.'' The term ''launch services'' is defined by the Act to include ''(A) activities involved in the preparation of a launch vehicle and payload for launch; and (B) the conduct of a launch.'' 49 U.S.C. 70102(5). When this term is coupled with ''contractors and subcontractors'' for purposes of sections 70112 and 70113 of the statute, a literal reading could narrowly limit the group of covered contractors and subcontractors to service providers involved strictly in on-site launch preparatory and support activities. The Office does not believe that this interpretation is consistent with the overall objective of the financial responsibility and payment of excess claims provisions of the statute, which is to ensure financial protection and an equitable sharing of risks among the parties exposed to potentially catastrophic losses from a launch accident. The group of covered parties should not be limited only to the most obvious and visible launch participants that are engaged in preparing the launch vehicle and payload for launch and conducting the launch at the launch range. This group should also encompass, for example, the manufacturer that produces a component part for installation in the launch vehicle or payload, or the supplier that delivers a piece of equipment or other physical object used to prepare for or conduct a launch, as well as the contractor that constructs or refurbishes a launch pad specifically for licensed launch activities. In other words, to the extent a third-party loss is attributable to the direct or direct involvement of contractors or subcontractors who have provided goods or services in connection with licensed launch activities, the required insurance should cover their resulting liability. It is important to note that the statute addresses claims that result from an activity carried out under a license. Third-party claims that do not result from licensed activities are not addressed by the financial responsibility requirements of the statute. For example, third-party claims that arise *during* the manufacture of a component part would not be covered by required insurance.

Accordingly, the term ''contractors and subcontractors'' as set forth in proposed § 440.3 would include all contractors and subcontractors at any tier that participate in or contribute to the conduct of licensed launch activities, including suppliers of property and services and component manufactures of a launch vehicle or payload. The Office requests comments on the practical ability to protect all of these parties through required insurance.

The definition of the term ''customer'' in proposed § 440.3 is intended to respond to concerns that the protections afforded ''the customer'' under the statutory allocation of risk regime be available not only to the party that actually contracts with the commercial launch services provider and prospective licensee, but also to the intended beneficiary or recipient of launch services when the latter party is different from the former. For example, this situation typically arises in the context of ''turnkey'' contracts for on-orbit delivery of a satellite. Under this type of arrangement, the ultimate owner/operator of the satellite contracts with a satellite manufacturer to produce the satellite and secure launch services to deliver the satellite to a prescribed orbit. The satellite manufacturer purchases launch services directly from a commercial launch services provider, and transfers title to the satellite only after successful completion of the launch and on-orbit tests to confirm that the satellite is functioning properly. For this reason, the term ''customers'' also includes a person to whom the procurer of launch services *conditionally* sells, leases, assigns, or otherwise transfers its rights in the payload or a part thereof. Another example is the purchaser of an interest in the satellite, *e.g.*, transponders, from the party that owns the satellite whether that party has purchased launch services directly or has contracted for on-orbit delivery on a ''turnkey'' basis. Another example is the customer who has placed its property on board the payload in order to receive an on-orbit service, such as microgravity experiments. The Office believes that these parties should be viewed as ''customers'' in order to enable U.S. commercial launch services providers to compete with foreign operators, consistent with one of the objectives of the 1988 Amendments. The proposed definition of ''customer'' therefore includes the person who enters into a launch services agreement with the licensee, as well as any person to whom the customer has, conditionally or otherwise, sold, leased, assigned or otherwise transferred any of its rights in the payload to be launched.

The term ''customer'' does not include the ultimate beneficiary of the payload services, as opposed to launch services, because doing so could theoretically include any person who uses a television or makes a long-distance telephone call, and goes beyond the intended scope of the Act.

When the licensee's customer is a U.S. Government agency, it is not intended that the agency be treated any differently from a nongovernmental customer with respect to the payload. Thus, as discussed in greater detail in the accompanying supplementary information under the heading, ''Government Customer,'' and in the analysis of § 440.17 of the proposed regulations, the Government payload is not covered by required Government property insurance and the U.S. Government agency involved accepts responsibility for property damage to the payload. For other purposes, the Government customer is an agency of the United States involved in licensed launch activities and, as such, it is a named insured in required insurance and its employees are deemed third parties.

A definition of the term ''Government personnel'' has been included in proposed § 440.3 for purposes of identifying those employees of the Government and its contractors and subcontractors entitled to protection and coverage by required insurance.

A definition of the term ''hazardous operations'' is included to add clarity to the list of information required by the Office to perform a determination of maximum probable loss. The definition proposed is consistent with the Office's study, ''Hazard Analysis of Commercial Space Transportation,'' prepared in May 1988, and is intended to capture activities that create a potential for an accident that would result in damage or injury.

The term ''liability'' refers to any legal obligation, whether arising under United States, international or foreign law, to pay claims for bodily injury or property damage resulting from licensed launch activities.

The term ''licensed launch activities'' is intended to reflect the activities subject to the Department's authority under the Act to license the launch of a launch vehicle. For purposes of applying the proposed regulations, it focuses specifically on activities authorized to be conducted under a particular license issued by the Office.

The term ''maximum probable loss'' (or MPL) refers to the Office's determination, in the form of a dollar amount, of the greatest potential losses for bodily injury and property damage

that can reasonably be expected to occur as a result of licensed launch activities. The Office determines the value of the maximum probable loss attributable to licensed launch activities by analyzing the known hazards, the consequences (amount of loss), and probability of loss associated with such activities. It does not mean maximum possible loss, that is, a ''worst case'' scenario regardless of likelihood. Rather, assessing maximum probable loss employs risk analysis methodology. The analysis takes into account the characteristics of one or more launches in similar circumstances, the proximity of persons and property on and around the launch site and the likelihood of injury and damage within an established probability threshold. (A more elaborate explanation of the Office's methodology for determining the value of maximum probable loss is provided in the section-by-section analysis accompanying § 440.7.)

Through risk analysis, the Office determines two results: the probability an undesirable event will occur and the consequences (measured as the amount of loss) of that event. The Office then compares these results to a threshold probability of occurrence selected by the Office in order to determine whether the results are reasonable to expect, or probable, and therefore warrant financial protection against their occurrence. Typically, the larger, or more catastrophic, the potential loss or damage, the less likely it is to occur. The threshold probability is the probability value selected by the Office at and below which loss or damage that can be reasonably expected to occur is measured. Loss or damage that has a likelihood of occurring that is equal to or greater than the threshold probability is considered probable. Accordingly, insurance to protect against that amount of damage or loss is required. Loss or damage that has a likelihood of occurring that is less than the threshold probability is not reasonably likely to occur and is therefore considered improbable. Accordingly, insurance to protect against such loss or damage is not required. In summary, maximum probable loss is the dollar value determined by the Office as the upper bound of loss that can reasonably be expected to result from licensed launch activities. Loss or damage exceeding the upper bound would result from events that are so very unlikely as to be unreasonable to expect. That is, they are not sufficiently probable.

Currently, the Office utilizes two different threshold probabilities in determining third-party and Government property maximum probable loss. The threshold probability used for determining third-party MPL, exclusive of Government personnel, is on the order of one in ten million. The threshold probability for determining Government property MPL and third-party MPL for Government personnel is on the order of one in one hundred thousand. The thresholds are defined to accommodate the difficulty of setting precise bounds on risks that, by definition, are somewhat remote.

The Office's selection of on the order of one in ten million as the threshold probability (the probability of occurrence) for determining third-party MPL is based upon the Government's experience in supporting launch activities at Federal ranges. Because of the stringent safety requirements used at Federal range facilities, the general public in the vicinity of the range has little chance of being adversely affected by a launch event. As a result, the likelihood of a third-party casualty resulting from a launch from a Federal range should be no greater than on the order of one in one million. If the Office used one in one million as the threshold probability for determining third-party MPL, no third-party loss would reasonably be expected to occur, the MPL would be zero, and no third-party liability insurance would be required. The Office does not believe that this was the result Congress intended in adopting maximum probable loss as the basis for setting financial responsibility requirements. Accordingly, the Office's view is that the Act requires a reasonable and measurable amount of financial responsibility by licensees and has selected the very low threshold of on the order of one in ten million probability of occurrence as the threshold probability that achieves this result. The MPL determination using this threshold signifies that there is less than on the order of a one in ten million chance that claims for third-party losses would exceed the required amount of insurance. Stated another way, the insurance requirement set by the Office is the maximum magnitude of loss such that there is less than on the order of one in ten million chance of exceeding this amount.

The Office utilizes on the order of one in one hundred thousand as the threshold probability for determining Government property insurance requirements because Federal range facilities, by their very nature and intended purpose, will be exposed to hazardous activities and may suffer some damage. Thus, the Government appropriately accepts greater risk than third parties and the MPL is determined using the higher threshold probability. This assumption of some amount of risk may, in part, account for the lower statutory ceiling on insurance requirements and the Government's waiver of claims for damage above the amount of required insurance. Similarly, Government personnel, including employees of Government contractors and subcontractors, accept greater risk than the general public or other third parties through their exposure to or involvement in hazardous operations. For this reason, the third-party MPL determination includes risks to Government personnel measured at the probability threshold of on the order of one in one hundred thousand, rather than on the order of one in ten million.

In the Office's experience, this approach results in insurance requirements that are reasonable, within the statutory ceiling for required insurance, and adequate to protect U.S. Government interests.

The proposed definition of the term ''third party'' reflects the definition contained in 49 U.S.C. 70102(11). However, the Office's definition of ''third party'' clarifies the statutory definition by expressly including as third parties United States Government personnel, including employees of Government contractors and subcontractors, to the extent that they are directly involved in providing launch support or launch services for licensed launch activities. The purpose of the definition is to ensure that liability insurance, or other form of acceptable financial responsibility, required under § 440.5(b) of the proposed regulations is available to cover the claims of Government personnel, as well as persons not involved in licensed launch activities, who are injured or otherwise sustain a loss as a consequence of those activities. Government personnel who contract personally and directly with a licensee or other nongovernmental launch participant to provide a service are not considered Government personnel for purposes of these regulations when performing that service. In addition, the proposed definition would expressly exclude employees of other launch participants because their claims for injury or loss are not intended to be included in the Office's determination of required third-party liability insurance. Responsibility for employee losses is assumed by each employer under the reciprocal waiver of claims required under § 440.17 of the proposed regulations, and those employee claims are not eligible for payment by the U.S. Government in the event of excess third-party claims.

The term ''United States'' is intended to refer to the United States Government in its entirety and as the collective sum of its various parts.

Section 440.5—General

Although issuance of a license constitutes legal authorization to carry out the activities specified therein, certain conditions must be satisfied for the licensee to proceed with authorized activities.

Section 440.5(a), as proposed, would establish the fundamental requirement that authorization to conduct licensed launch activities pursuant to a license issued by the Office is contingent upon the licensee's demonstration of financial responsibility and compliance with risk allocation requirements as set forth in proposed regulations. In addition to insurance required by this part, a licensee may be required by other agencies of the United States Government to obtain other types of liability or property insurance covering activities involving United States launch property, launch services or personnel. Other insurance requirements may include workers compensation, unemployment insurance, employer's liability, comprehensive automobile liability, environmental liability, or insurance required by Federal, State or local environmental protection laws and regulations. These other insurance requirements are not set forth in license orders issued by the Office; however, licensees are not relieved of the requirement to comply with them.

In addition, as further explained in the section-by-section analysis accompanying § 440.15(b), the financial responsibility requirements prescribed under the proposed regulations would preempt those provisions in agreements between the licensee and the United States, or any agency thereof, involving United States launch property or launch services that address financial responsibility, allocation of risk, and related matters covered by 49 U.S.C. 70112 and 70113. The objective of this preemption is to avoid duplicative requirements, but not to relieve the licensee of contractual or legal obligations intended to address interests other than those served by the statute.

Section 440.5(b) would codify the Office's existing practice of setting the required amount of financial responsibility in license orders. As a procedural matter, the Office has relied on the issuance of license orders to supplement the license and prescribe specific terms, conditions and limitations, including financial responsibility requirements, on a case-by-case basis. Many of these terms and conditions would now be set forth in rules of general applicability. The amount of financial responsibility that must be obtained would continue to be set forth in a license order. The license order would generally be issued concurrently with the license, although there may be circumstances when it would follow issuance of the license. The Office may also revise financial responsibility requirements in a subsequent license order in the event of a change in exposed property or risks affecting the required amount of coverage. In any event, to the extent the license order reflects the Office's determination of maximum probable loss, the timing of its issuance would be subject to the provisions of proposed § 440.7.

Propose § 440.5(c) states the fundamental principle that evidence of financial responsibility provided by the licensee is no substitute for actual financial responsibility of the licensee. In the event the licensee fails to obtain or maintain insurance or financial responsibility in amounts and according to the terms and conditions prescribed, the licensee would bear the risk and be liable for claims resulting from licensed launch activities that would otherwise have been covered. In addition, in the event of a defense raised, or exclusion, to coverage under the policy that relieves the insurer from compensating claims, the licensee would remain responsible for satisfying the claim. The only exception to this fundamental principle provided under the statue is where the Secretary of Transportation specifically determines that an exclusion is usual for the type of insurance involved, and the United States Government agrees to provide for paying claims from the first dollar of loss. As explained in the section-by-section analysis accompanying § 440.19, a policy exclusion would be considered ''usual'' only if insurance covering the excluded risk is not commercially available at reasonable rates. The licensee is required to submit a certification to that effect when demonstrating compliance with financial responsibility requirements. No final determination is made by the Department unless and until an occasion arises when the Department is called upon to prepare a compensation plan covering excluded claims. If it then becomes evident that insurance was, in fact, available at commercially reasonable rates, the Government need not pay claims from the first dollar of loss and the licensee remains responsible for the liability.

Failure by the licensee to comply with these requirements may result in suspension or revocaton of the license and also subjects the licensee to other penalties as provided in section 405.7 of this chapter.

Section 440.7—Determination of Maximum Probable Loss

Section 440.7, as proposed, describes the Office's procedures for assessing and issuing a determination of maximum probable loss (MPL) on which financial responsibility requirements are based. Section 440.7(a) would provide that a determination of maximum probable loss resulting from licensed launch activities forms the basis of the financial responsibility order issued by the Office.

Section 440.7(b) would provide the timing for the Office's issuance of the MPL determination, consistent with the Act. The Act provides that MPL determinations must be made no later than 90 days after a licensee or transferee requires it and has submitted all of the information needed to make a determination. In practice, the Office begins the risk analysis required for the MPL determination during the 180-day license application review period. Doing so enables the Office to issue financial responsibility requirements concurrently with a license so as not to delay commencement of licensed launch activities.

On a very few occasions, the Office has been unable to issue the MPL determination concurrently with the license. This result may occur for several reasons. In order to conduct the analyses, the Office requires from the applicant information described in Appendix I to the proposed regulations and may also request information from Federal range facilities involved in proposed launch activities or exposed to risk of damage or loss as a result of proposed activities. Incomplete information, either from the applicant or from the Federal range facility, can extend the amount of time necessary for the Office to complete and issue the MPL determination. Typically, a delayed determination results from submission by the applicant of incomplete information on which to perform the necessary risk analyses. Until the Office has complete and sufficient information the 90-day period does not begin. A delayed determination as a result of incomplete information is not untimely. In addition, the Act requires that the Office consult with heads of other appropriate Federal agencies in issuing financial responsibility requirements. The Office's practice has been to share its

MPL analyses with affected Federal agencies and request comments within three weeks. The Office's experience has shown that three weeks may not be sufficient for other Federal agencies to complete their reviews and issuance of the MPL determination may necessarily be delayed.

Accordingly, proposed § 440.7(b) would provide that the Office notify a licensee or transferee of any delays in issuing the MPL determination beyond the statutory 90-day period. The Office intends that this provision would be invoked only in circumstances beyond the Office's control, such as protracted consultation with other Federal agencies.

Proposed § 440.7(c) refers to Appendix I to the proposed regulations which prescribes information requirements for issuing a maximum probable loss determination. Appendix I is intended to be a comprehensive list of information requirements, some of which could be waived by the Office if, as a result of consultation with the applicant, the Office finds that the information is not necessary in light of the particular launch proposal. Once information is provided, the person requesting the MPL determination is responsible for reporting any changes that could affect the outcome of the risk analyses.

As provided in proposed § 440.7(d), the Office may amend or adjust its maximum probable loss determination to reflect any new information relevant to an accurate assessment of risk. In lieu of submitting duplicative information, a person requesting a MPL determination who has previously been issued one may certify that there has been no change from information previously submitted. This provision is intended to reduce the regulatory burden on licensees who conduct similar launch activities under separate licenses.

An MPL determination must accompany every license authorizing launch activities and is therefore typically performed in conjunction with the Office's review of a license application. Section 440.7(e) would address the situation in which the Office is requested to issue a determination of maximum probable loss resulting from activities that are *not* the subject of a specific license application. A determination made under this section would not be governed by the 90-day requirement set forth in § 440.7(b).

Methodology for Determining Maximum Probable Loss

The Office derives the value of the maximum probable loss that may result to third parties and Government property from licensed launch activities through case-by-case risk analyses. The Office considers factors ranging from the kinds of hazardous operations, as defined in proposed § 440.9, to be conducted under a license, to the number of third parties that may be exposed to risk in the event of a launch accident. Failure modeling techniques, the Office's experience in preparing numerous MPL determinations, and engineering judgment all play roles in the final determination. A more complete description of the Office's approach to hazard analysis and risk analysis techniques appears in a study, entitled ''Hazard Analysis of Commercial Space Transportation,'' released by the Office in May 1988. A copy may be obtained from the Office upon request. In addition, the Office is preparing a comprehensive description of its procedural methodology for determining maximum probable loss in a separate report to be made available to the public. A brief summary of the Office's approach to determining MPL is presented below to explain the underlying rationale for the information requirements referenced in proposed § 440.7(c) and listed in appendix I to part 440.

In addition to information required from the applicant, the office obtains certain information from the Federal range facility in order to assess properly the value of Government property exposed to risk. This information is not reflected in regulatory requirements. Typically, this information consists of identification of facilities the Federal range facility has authorized for use by the licensee and the value of those facilities, other range facilities that the Federal range facility identifies as exposed to risk as a result of the licensee's proposed launch activities due to their proximity to the licensee's hazardous operations, the number of Government personnel that the Federal range facility believes would be exposed to risk, and range-required risk mitigation measures.

Much of the information required to complete the MPL determination is provided as part of the application to conduct a launch. However, because any person can request a maximum probable loss determination at any time, information requirements for obtaining a determination are included as part of this proposed regulation. The proposed information requirements are not intended to place an additional or duplicative burden on prospective licensees and can be satisfied by specific reference to the license application.

Appendix I describes the full range of information required from an applicant to complete the MPL determination. In certain circumstances, not all of the information would be required and the Office will advise the applicant accordingly during pre-application consultation. For example, where a launch from an isolated location would not expose any identifiable Government property to risk, the Office would waive those information requirements directed at assessing risk to Federal range facility assets. A launch proposal may involve vehicles and risks similar to those previously considered by the Office and the Office may waive information requirements it believes would be unnecessary or duplicative in light of existing analyses. Where the Office can determine, on the basis of the launch proposal, that certain risks need not be considered in order to calculate MPL, the Office will waive the requirements that pertain to those risks.

The complexity of the MPL analysis will depend upon the risks that attend a specific launch proposal. At its most complicated, a complex launch vehicle involving hazardous operations and flight paths that expose people and property on and off-range to risk, the Office is able to employ a variety of risk analysis tools, such as computer models that estimate impact probabilities, potential property damage and casualty expectations. For all proposals, government property and third-part losses are considered in separate MPL analyses.

The Office's objective is to determine the value of the maximum magnitude of loss that is sufficiently probable to warrant financial responsibility protection. That is, within the stated probability thresholds, as defined in proposed § 440.3, the Office must establish a maximum value of loss. By corollary, the maximum magnitude of loss within the probability threshold drives the MPL value. This means that the Office need not consider every single accident scenario that falls within the threshold probability. Those having relatively minimal damage consequences need not be individually considered. Rather, the office's focus is on finding the maximum value of loss that would result from an accident that is within the specified threshold probability of occurrence. The Office does so by identifying specifically the hazardous activities to be conducted under a license, Government and third-party property placed at risk by those activities, and the number of third parties placed at risk. Then, the Office identifies a range of accident or failure scenarios and estimates the probability

of occurrence for each scenario. The Office then estimates the value of loss for various accident scenarios.

The Office utilizes several methodologies, in order of preference, to estimate the probability of occurrence of the different scenarios. The order of preference begins with actual experience or existing models, and descends to expert probability analysis as the second best alternative, followed by professional engineering judgment.

Estimating the value of loss for each accident scenario is done similarly, using different methodologies in an order of preference. Actual experience is most reliable and is used wherever it exists and is directly applicable to a launch proposal. For pre-flight licensed launch activities, the Office uses estimates that are informed by facility damage tables developed for the Federal range facilities, building design specifications, and engineering judgment. Computer models, such as the Facility Damage and Personnel Injury (DAMP) programs, may be used to estimate damage during and immediately following vehicle life-off. For third-party casualties, the Office develops an Expectation of Casualty figure for off-range population and Government personnel at risk.

As noted above, low loss scenarios need not be considered unless a possible accident scenario involves losses that, when combined, may be significant in determining the value of the maximum probable loss. However, in many instances, accident scenarios are mutually exclusive. For example, a pre-flight accident that destroys the launch vehicle means there will be no launch, and there is no need to aggregate the damage from a pre-flight accident of this nature and a post-launch accident in determining the maximum value of loss.

In summary, the Office performs a detailed estimate of property damage and casualties for the different accident scenarios that fall within the threshold probability of occurrence in order to determine the maximum value of loss. The MPL value becomes the amount associated with the most costly accident scenario falling within the threshold probability of occurrence.

Government Property

The Office's maximum probable loss determination for Government property damage takes into account U.S. Government property situated on a Federal range facility, wherever located. As noted above in the Supplementary Information, the Office includes as part of its determination Government range assets on adjacent Federal range facilities that are exposed to risk of damage or loss as a result of licensed launch activities.

The Office historically has not considered temporarily placed or ''transient'' Government property, including launch vehicles and payloads, in calculating the maximum probable loss determination. The Office bases its approach on several considerations. First, the Federal range facility is responsible for maintaining a schedule of launch activities. The Government is therefore aware of upcoming commercial launch activities and, by exposing its transient or movable property to the possibility of damage or loss due to commercial launch activities, accepts certain risks. Second, readily movable property may no longer be present at the time the licensee ultimately conducts licensed launch activities. If that property were included in the MPL determination, the licensee may be unfairly burdened with too great an insurance requirement. One alternative would be to adjust, either upward or downward, the amount of property insurance that would be required just prior to commencing licensed activities. This approach is arguably contemplated by the statue, which provides for the Secretary to amend the maximum probable loss determination when new information so warrants. However, last minute adjustments to the MPL determination due to the Government's action of placing its property at risk, could prove administratively burdensome for both the Office and the licensee, whose launch could be delayed by having to demonstrate additional financial responsibility due to last minute changes in requirements. Third, including transient or Government property temporarily located on the Federal range, such as launch vehicles and payloads, could readily drive the MPL value above the $100 million statutory ceiling for required insurance. Although the Act contains provisions whereby the Department is directed to review annually the statutory ceilings on required insurance and report to Congress proposed adjustments to conform with changed liability expectations and the insurance market, the Office views the $100 million statutory ceiling on the Government property insurance requirement as a clear indication that Congress did not intend for these Government assets, which typically cost in excess of $100 million *each*, to be included as part of the range assets on which the MPL determination is based.

The Office makes an important distinction between transient, movable property that is not included in the MPL determination and property that has been placed in a storage facility on the Federal range. The latter is included in the MPL determination. The rationale for the Office's distinction is that certain facilities are intended, by design, to house Government property on a temporary or long-term basis. However, where Government property has been stored in a facility not designed or intended for storage, thereby exposing the property to additional risk, the Office believes it would be unreasonable to impose the cost of this additional risk on the licensee. The Office therefore excludes the stored property from its MPL determination. In addition, to the extent this stored property, such as rocket motors or explosives, may contribute to the possible extent of damage to Government facilities, the Office does not factor the additional losses that may be attributed to that property in determining the MPL value.

In taking the approach of excluding certain transient, movable Government property, the Office is aware that failure to include it could expose the Government to greater risk of loss. However, the Office believes that its approach reflects the intent underlying the comparatively low statutory ceiling on the Government property insurance requirement, and is reasonable in light of the Government's assumption of risk in placing property on the Federal range facility in a manner that exposes it to damage or loss from commercial launch activities. For these reasons, the Office believes that its approach is the better one. Nevertheless, it is important to bear in mind that, whether or not the value of certain property is included in making the MPL determination, damage or loss to any Government property, whether fixed or movable, located on the Federal range facility must be *covered* by the insurance policy the licensee obtains under 49 U.S.C. 70112(a)(1)(B). Comments are requested on the Office's approach to considering non-fixed Government property in determining Government property insurance requirements.

Current Replacement Value

In determining maximum probable lose for Government property, the Office bases its findings on the current replacement value of the property. The notion of current replacement value takes into account the current use and function of a Government facility, not its originally intended use. For example, the current replacement value for a facility that was originally built to support engineering operations but is no longer needed for that purpose and is

now used as an excess storage facility would most likely be lower than its original construction cost, even if a launch accident meant its total loss. The Office's rationale is that the cost of restoring property to its original use when the Government itself has chosen not to maintain the property in its original condition imposes an unfair cost on the licensee. The reverse situation may also occur, whereby restoring property to its current use may cost more than restoring it to its original use. This could occur where property has been up-graded or modified to support another purpose than originally intended. In that event, the Office believes that it is fair and appropriate to require insurance that covers the maximum probable loss to the property's current value, up to the statutory ceiling. In all circumstances, the Office consults with Federal range authorities in valuing Government property.

Third-Party Property Damage

Under the proposed regulations, third-party property includes all property owned by persons or entities other than the licensee and its customer, and the contractors, subcontractors, and employees of each, involved in licensed launch activities, the Government's contractors and subcontractors involved in licensed launch activities, and the Government (except for property located on a Federal range facility). It includes the personal property belonging to Government personnel involved in licensed launch activities, and all off-range private and public property other than property on nearby or adjacent Federal range facilities for which Government property insurance coverage is required.

The risk analysis performed to determine the value of third-party property maximum probable loss utilizes three approaches to estimating property values: (1) Specific determinations, (2) averaging, and (3) setting an upper bound or ceiling. The Office selects the appropriate methodology to use on a case-by-case basis, taking into account such factors as the availability of information, the launch site, and the range of risks to third parties presented by a particular launch proposal. The Office may use all three methods of estimating third-party property losses in one MPL determining, depending upon the type and amount of property exposed to loss or damage as a result of licensed launch activities. In all instances, the Office utilizes a conservative approach to ensure the adequacy and sufficiency of its MPL determination and third-party liability financial responsibility requirement.

The first estimation methodology, specific determinations, entails obtaining actual property values and determining the likelihood and consequences of an accident affecting that property. This method is typically used for very high-value property in the area that would be most exposed to risk. The second method, averaging, can be accomplished in several ways. One way is to average estimated property values in a homogeneous area through such means as county or city tax assessment records. Another is to assume that an accident will occur in the high-value part of the risk area and determine the average of the high-value property exposed to risk. This conservative approach assures that the MPL determination will be sufficient to cover losses to this high-value property. The third method, setting an upper bound, also yields a conservative result. This approach utilizes the Office's experience by considering the nature and size of the area exposed to risk, *e.g.*, urban, suburban, rural, industrial, farm, or some combination, and comparing it to third-party property considered at risk in past MPL analyses and to know values of Government property placed at risk. Setting an upper bound involves a qualitative assessment of the value of third-party property at risk and is based on the Office's extensive experience in assessing risk.

Third-Party Casualties

The Office must also consider third-party casualties in determining maximum probable loss to third parties. Doing so requires an analysis of the number of persons exposed to risk and assigning a value of life. Department guidance issued in 1993 for preparing economic evaluations suggests using $2.5 million as the value of life in estimating one's willingness to pay for safety measures in order to reduce one's probability of death. However, the Office is mindful of the distinction between the value of life used for purposes of estimating the cost of safety requirements in regulations and for seeking damages in civil litigation. Accordingly, the Office utilizes the somewhat higher figure of three million dollars as the value of a life to assure a conservative, but reasonable, result.

The Office requests comments on the appropriate means of assessing the value of third-party property and the value of life for purposes of determining maximum probable loss to third parties. In their comments, commenters are requested to consider the impact on insurance requirements that could result from a change in methodology.

Section 440.9—Insurance Requirements for Licensed Launch Activities

This section would establish in a regulation financial responsibility requirements in the form of insurance as a condition of every license issued by the Office authorizing commercial space launch activities. A licensee would also be allowed to demonstrate an equivalent amount of financial responsibility through means other than insurance.

Proposed § 440.9(b) would establish the requirement that a licensee obtain a policy of liability insurance to pay claims of third parties for bodily injury or property damage resulting from licensed launch activities. In accordance with 49 U.S.C. 70112(a)(4), the parties protected under the insurance policy as insureds, or additional insureds, are the United States, its agencies, and its contractors and subcontractors, and their respective personnel, involved in licensed launch activities; and the licensee, the customer, and their respective contractors and subcontractors involved in licensed launch activities. Because Government personnel, as defined in proposed § 440.3, are included within the proposed definition of ''third party,'' Government personnel may be both third-party claimants whose claims are compensable by required liability insurance, as well as additional insureds.

Under proposed § 440.9(c), the amount of required insurance is based on the Office's determination of maximum probable loss from third-party claims resulting from licensed launch activities. As provided by statute, the amount of coverage required by the Office may not exceed $500 million, or the maximum liability insurance available on the world market at reasonable cost. It should be noted that the maximum limit on insurance applies to the aggregate of claims for any particular launch, as provided by 49 U.S.C. 70112(a)(3). A policy may cover more than one launch. However, the amount of insurance prescribed by the Office in a license order must be available to cover the total of third-party claims resulting from each launch event. For example, if a licensee intends to conduct a series of launches under an operator license and third-party claims resulting from the first launch are compensated by the liability policy, the amount of coverage for each succeeding launch must be the amount required by the license order. Coverage may not be reduced by the amount of claims paid

as a result of previous launch activities conducted under the same license.

Section 440.9(d) would establish in a regulation the requirement that a licensee must obtain a policy of insurance to compensate for damage to or loss of property at a Federal range facility that is owned, leased or occupied by, or in the care, custody or control of, the United States, its agencies, and its contractors and subcontractors involved in licensed launch activities, that results from licensed launch activities. The maximum probable loss determination to support this requirement focuses on valuable national assets located at Federal range facilities that are put at greatest risk by licensed activities; however, all Government property (and that of its agencies, contractors and subcontractors involved in licensed launch activities) at a Federal range facility must be protected. This would include Government range facilities surrounding or adjacent to the proposed launch site. The Office's experience in administering financial responsibility requirements to protect Government property has been previously described in the supplementary information accompanying this proposal under the heading, ''Property Protection for Government Launch Participants.'' The Office does not object to any reasonable approach on the part of a licensee that is taken to meet this requirement as long as the ultimate objective is achieved, that is, providing for the compensation of property damage sustained at Federal range facilities by the United States, its agencies, contractors and subcontractors involved in licensed launch activities, resulting from activities carried out under a license. However, the Office believes that, at a minimum, naming the U.S. Government and its agencies, contractors and subcontractors, involved in licensed launch activities, as additional insureds is necessary to accomplish this objective. Comments are requested on whether the Government should also be named the loss payee and be responsible for administering payment of insurance proceeds to its contractors and subcontractors.

Under proposed § 440.9(e), the amount of required insurance would be based on the Office's determination of maximum probable loss attributable to property damage claims of the United States, its agencies involved in launch services, and its contractors and subcontractors involved in licensed launch activities; however, the amount would not exceed $100 million. As noted in the analysis accompanying proposed § 440.9(c), the maximum limit on insurance applies to the aggregate of claims for any particular launch. Covered claims are those against a person, including Government employees, for damage or loss to Government property, including the property of Government contractors and subcontractors, resulting from licensed launch activities. In this respect, the named insureds are different from those on the liability policy.

Section 440.9(f) would provide that, in lieu of obtaining policies of insurance, the licensee may demonstrate financial responsibility in an alternative form—such as insurance purchased from a risk retention group authorized under the Risk Retention Amendments of 1986, surety bonds, letters of credit, or some combination—that reflects substantially the same terms and conditions of the requirements set forth in these regulations. Whatever the form of financial responsibility proposed in lieu of insurance, the licensee must demonstrate that it meets the requirements for financial responsibility.

Section 6 of the 1988 Amendments to the Commercial Space Launch Act provides special incentives to certain satellites affected by National Security Decision Directive 254. This directive, issued by President Reagan in August 1986, following the Challenger accident, essentially ended NASA's role in launching commercial and foreign satellites. Section 6 of the 1988 Amendments provides that if certain eligibility criteria are met, the requirement that the licensee obtain property insurance covering loss of or damage to United States Government property does not apply. The Office believes that there are no remaining ''eligible satellites'' that have not been launched or otherwise accounted for and no provision is made in the proposed rulemaking to cover them. Comments are requested as to whether this provision may be properly omitted in final regulations.

Section 440.11—Duration of Coverage; Modifications

Proposed § 440.11(a) would specify when financial responsibility must be in place. Section 440.11(a), as proposed, would provide that required insurance coverage or other form of financial responsibility must attach upon commencement of licensed launch activities, and remain in full force and effect until the later of: (i) The completion of licensed launch activities, as defined by the Office in a regulation, or (ii) until risk resulting from licensed launch activities to third parties and Government property is sufficiently small, as determined by the Office through the risk analysis conducted to determine maximum probable loss, that financial responsibility is no longer necessary. The duration of financial responsibility requirements for a particular launch is specified by the Office in a license order.

The statutory requirement for a licensee to obtain insurance or otherwise demonstrate financial responsibility refers to providing compensation for claims ''resulting from an activity carried out under the license.'' 49 U.S.C. 70112(a)(1). Based upon this language, the Office's view is that insurance requirements attach upon commencement of licensed launch activities but do not necessarily cease upon completion of a licensed launch, defined for orbital launches as the point when any remaining fuel is emptied from the upper stage, the vehicle tank is vented and otherwise ''safed,'' and the upper stage is no longer subject to the operator's control. Hazard analyses performed by the Office to determine maximum probable loss have shown that the greatest exposure for which insurance is typically required exists at the time of lift-off and flight, and that there is virtually no quantifiable risk to third parties or to United States Government property after completion of a nominal launch. The Office has found that thirty days is an appropriate amount of time in which to determine whether an orbital launch has been nominal or whether an anomaly has occurred that could affect risks to third parties or the Government. For this reason, historically, the Office has provided in license orders applicable to orbital launches that insurance coverage is required to attach upon commencement of licensed activities and remain in force ''for a period of thirty (30) days following payload insertion into orbit.'' For suborbital launches, insurance has been required to be maintained at least until motor impact and payload recovery. However, in the event of a launch anomaly, the Office may amend the license order to require that the licensee maintain insurance until the Office determines that risks to third parties and Government property are sufficiently small that insurance is no longer needed.

When the licensee is no longer required to maintain insurance under the license, both the Government's waiver of excess property damage claims under § 440.17(c), and the Government payment of excess third-party claims provisions under § 440.19, would apply from the first dollar of loss. However, it is important to note that the

Act requires that the third-party claim result from the licensed activity in order for the Government payment of excess third-party claims provision to apply. When that nexus no longer exists, neither does the Government's acceptance of the risk of such claims. In every instance, a factual determination would be required as to whether a sufficient nexus exists between the licensed activity and the third-party claim. In terms of business planning, it has been the Office's experience that for nominal launches, licensees may procure insurance for periods of time in excess of thirty days in accordance with individual risk management practices because the premium rate difference to cover any additional period of time tends to be negligible.

As noted in the preceding Supplementary Information, questions have arisen over time with respect to the appropriate scope of a license authorizing pre- and post-flight ground operations and associated requirements for insurance coverage. As to pre-flight activities, the Office intends to address the question of the appropriate scope of a license authorizing launch activities in a separate rulemaking. With respect to post-launch ground operations, the Office believes that damage to Government property or property of Government contractors and subcontractors, as well as to third parties, could occur during clean-up and from removal of launch-related equipment and material and that insurance should remain in place to protect against such claims. In this regard, it is significant to note that the Act requires financial responsibility to protect against claims ''*resulting from* an activity carried out under license'' (emphasis supplied) (49 U.S.C. 70112(a)(1)). Comments are requested on the proposed duration of required insurance with respect to ground operations, including clean-up and removal of launch-related equipment from the launch site. Comments are also requested on the extent to which insurance should be required to compensate claims of third-parties and the Government for short-term environmental damage, or alternatively, whether clean-up or short-term environmental damage to Government property should be charged to the licensee as a direct cost.

The Office is also requesting comments on the extent to which insurance to protect against claims for long-term environmental or property damage should be required, its availability, and mechanisms for assuring adequate coverage has been obtained. The Office is aware that long-term environmental damage risks are typically excluded from launch insurance coverage because of, among other things, the difficulties of insuring against claims that may not arise until long after the risk period (generally launch plus a number of days) is concluded. Commenters should address whether such claims should be included in determining maximum probable loss for licensed launch activities and whether the existing statutory ceilings are adequate if such claims are included. In considering the issue, commenters are requested to suggest mechanisms for ensuring that funds are available to address long-term environmental damage that results from commercial launch activities. Commenters are also requested to address whether and the extent to which insurance to protect against property damage that results from orbital debris long after a launch has been completed should be required.

Section 440.11(b), as proposed, would provide that the licensee may not replace, cancel, change or withdraw the insurance or other form of financial responsibility required, or in any way modify it to reduce the limits of liability or the extent of coverage, and that any form of financial responsibility may not be permitted to expire prior to the time specified by the Office in a license order, unless the Office is notified in advance and expressly approves of the modification. The purpose of this requirement is to ensure that the licensee has adequate coverage in place that meets the requirements of the applicable license order.

Section 440.13—Standard Conditions of Coverage

Proposed § 440.13(a) identifies the terms and conditions that must be included in any insurance policy obtained to satisfy the requirements of proposed § 440.9. With some modification, the proposed terms and conditions of insurance coverage have been required by the Office in license orders issued on a case-by-case basis in order to carry out the office's responsibilities under the statute, and to the Office's knowledge, have not been difficult to obtain.

Section 440.13(a)(1) would provide in a regulation that any required policy of insurance must provide that bankruptcy or insolvency of the insured (licensee) or any additional insured does not relieve the insurer of any of its obligations under the policy. This requirement is commonly found in liability insurance policies. Its presence is desirable because under common law, if an insurance agreement were construed as only an agreement to indemnify against loss, under certain circumstances the insurer could avoid payment of third-party claims altogether where the insured was declared insolvent. This condition is intended to remove any doubt that the policy insures against liability to pay damages and is not merely an agreement to indemnify against loss.

Section 440.13(a)(2), as proposed, would provide that the policy limits for any required insurance policy apply separately to each occurrence and in the aggregate with respect to claims resulting from licensed activities associated with a particular launch. This provision would further the intent of 49 U.S.C. 70112(a)(3), which prescribes insurance ceilings applicable to ''the total claims related to one launch, * * *'' As noted above, where insurance is obtained by a licensee for a number of launches under an operator license, the limits of the policy must be available for each licensed launch and may not be reduced due to claims resulting from a prior occurrence.

Proposed § 440.13(a)(3) would state that any required policy of insurance must provide for the payment of claims from the first dollar of loss, without regard to any deductible, to the policy limits, except in the limited circumstances allowed in the regulation. The Office discourages the use of a deductible because of the clear statutory mandate to ensure comprehensive protection for all insureds from liability for third-party claims and prompt restoration of United States range assets. If this coverage entails additional cost to the licensee, it is not unreasonable relative to the policy objectives underlying the statute. Risk retention arrangements between the licensee and its insurer may be used as a means of reducing the policy premium.

Nevertheless, the Office understands that licensees may desire a small deductible amount from their coverage in order to reduce policy premiums and the Office has included a provision in the proposal that would allow the reasonable use of deductible amounts. However, to ensure that statutory objectives are achieved, a deductible would be allowed only if the amount of the deductible is placed in a an escrow account established to cover claims resulting from licensed launch activities or if the licensee can demonstrate to the office that it has that amount readily available to it, with no prior liens or obligations on the funds. The Office believes that use of a deductible is appropriate only for comparatively small sums and should not be used as a means of avoiding insurance.

Comments are requested on whether the proposed approach is reasonable. Where Government property is concerned, commenters should bear in mind the objective that proceeds must be made immediately available to restore Government property to its prior condition and use, and that any delays (*e.g.*, in the event assets must be liquidated to pay claims) would be counter to the statute. The Government may also be exposed to claims by its contractors and subcontractors for their property damage where insurance proceeds are not immediately available to cover those loses. Any inability to obtain promptly full payment of such claims could expose the Government to administrative and legal expenses the Government seeks to avoid through required insurance.

Section 440.13(a)(4), as proposed, limits the defenses available to the insurer to avoid paying claims under the policy. It states that a required policy of insurance must provide that the actions of the insured or any additional insured shall not result in invalidation of the policy; however, an insured or additional insured itself may be denied coverage under a policy for claims against it in the event of any breach or violation by it of any warranties, declarations, or conditions contained in the policy. Action by the insured includes nonpayment of the policy premium. Thus, although the Office views the licensee as ultimately responsible for paying additional insureds under the policy as a result of the licensee's nonpayment of the premium.

As a general rule, liability and property insurance policies issued by insurance underwriters contain certain standard exclusions of coverage as well as particular exclusion depending on the activities for which insurance is sought. Proposed § 440.13(a)(5) acknowledges that the insurance policies required under § 440.9 may contain certain exclusion from coverage. Those exclusion must be specified.

In the event of a claim for property damage or bodily injury that is not covered by insurance, the liability for such damage and injury would ordinarily fall on the licensee or additional insured in the absence of some form of indemnification. The Secretary of Transportation is empowered, under 49 U.S.C. 70113(a)(2), to provide for payment of third-party claims that are the subject of insurance policy exclusions that ''are usual for the type of insurance involved'' and for which insurance is therefore not available to cover the claim. 49 U.S.C. 70113(a)(2). In addition, under 49 U.S.C. 70112(b)(2), the Secretary may, following interagency consultation, waive claims for property damage not covered by required property insurance by reason of exclusions that are ''usual for the type of insurance involved'' such that insurance is not available. 49 U.S.C. 70112(b)(2). As a result, a claim that is not compensated by insurance because it falls within an insurance exclusion determined by the Office to be usual would essentially permit first-dollar payment by the United States Government without regard to the thresholds provided, respectively, in 49 U.S.C. 70113(a)(1) and 70112(b)(2).

However, in determining what may be considered usual exclusions for the type of insurance involved, the Office is necessarily mindful of the direction from Congress that first-dollar payments by the United States for such exclusions should not be an inducement for insurers to begin restricting the scope of coverage in their insurance contracts with licensees. Moreover, payments for claims excluded from third-party liability coverage, like payments generally of third-party claims in excess of required insurance under 49 U.S.C. 70113, are subject to certain conditions including Congressional approval of a compensation plan and appropriation of funds.

There are no identical exclusions found in each and every policy. Variations exist among U.S., London, continental European and other overseas insurance markets. Moreover, exclusions may be added by an insurer depending on the particular market and types of risks involved, or can often be ''bought out'' by an endorsement or by a separate policy. Also, exclusions may be added or existing exclusions modified as a result of judicial interpretations the insurance market neither intended nor anticipated in setting its premium rates. Based on insurance market conditions and loss experience, future exclusions may vary from customary or usual exclusions today. Consequently, the proposed regulations define a usual exclusion as one for which coverage is not commercially available at reasonable rates. Licensees must certify at the time they demonstrate compliance with insurance requirements that insurance covering the excluded risks is unavailable at reasonable rates in order for the United States Government to provide for payment of claims from the first dollar of loss. However, the licensee's certification does not finally resolve that a particular exclusion will be deemed to be ''usual.'' That is, in the event the Office determines that insurance was available at reasonable rates the Secretary need not provide for payment of claims from the first dollar of loss. Comments are requested on other appropriate criteria for determining whether an exclusion may be considered ''usual.''

Proposed §§ 440.13(a)(6)–416.13(a)(8) would prescribe, in regulations, additional insurance requirements that have been customarily imposed by the Office in license orders in carrying out its statutory mandate.

Comments are requested on any other terms and conditions that would be appropriate to require in rules of general applicability.

Section 440.15—Demonstration of Compliance

As proposed, § 440.15(a) would require the licensee to demonstrate that it has complied with the insurance and allocation of risk requirements under the proposed regulations no later than thirty days before commencing licensed launch activities. However, a license order may require a licensee to demonstrate compliance in less than thirty days where the license or license order is issued less than thirty days before the licensee intends to commence licensed launch activities. It is strongly recommended that licensees submit required documentation demonstrating compliance with these requirements well in advance of the thirty-day period to ensure that the Office has adequate opportunity to review the submission and confirm compliance by the time the licensee wishes to commence licensed activities. It has been the Office's experience that thirty days is a reasonable length of time to address any issues that arise as a result of the licensee's submission. Where a licensee uses a form of financial responsibility other than insurance to demonstrate compliance, the Office require sixty days to review the submission and ensure its sufficiency.

Section 440.15(b) would establish in a regulation that once the licensee has fully demonstrated compliance with part 440 financial responsibility and allocation of risk requirements, these requirements preempt any conflicting or inconsistent requirements in any agreements the licensee may have previously entered into with other agencies of the United States concerning access to or use of United States launch property or launch services. This express preemption is necessary because there has been a significant amount of confusion in the past concerning the effect of similar or additional insurance requirements imposed by agreements governing

access to United States launch facilities. As stated above in the section-by-section analysis accompanying § 440.5(c), the object of this preemption is to avoid imposing duplicative and inconsistent obligations on the licensee, but not to relieve the licensee of contractual or legal obligations intended to address interests other than those served by the statute. The Office evidences its determination that a licensee has fully complied with part 440 requirements in a letter issued to the licensee.

Under the proposal § 440.15(c) would establish requirements for a licensee to provide the Office with proof of insurance. It is extremely important for the Office to secure adequate assurance that the licensee has obtained the insurance required under the regulations. However, the Office believes that it is unnecessary and impractical to review each policy constituting part of an insurance submission to ensure compliance. Accordingly, proposed § 440.15(c) and (d) would provide for certain certifications and representations from the licensee and its insurer, respectively. The licensee must certify that it has obtained insurance in conformance with the part 440 regulations and the applicable license order. In addition, the licensee must file with the Office one or more certificates of insurance evidencing coverage, as prescribed by the Office, under currently effective and properly endorsed policies applicable to licensed launch activities. A certificate of insurance must specify any policy exclusions or limitations in detail, in accordance with proposed § 440.13(a)(5a). In addition, the licensee would be required to certify that insurance is not commercially available at reasonable rates in order for the exclusion to be found usual for the type of insurance and the United States Government to provide for payment of claims from the first dollar of loss. The licensee would also be required to submit duly executed waiver of claims agreements, signed by the licensee and its customer. The licensee's certifications must be signed by a duly authorized officer of the licensee and may be submitted in one document.

Section 440.15(d), as proposed, would specify certain insurance certificate requirements. Each certificate of insurance must be signed by the insurer and accompanied by a signed opinion of the insurer stating that the policy obtained by the licensee complies with the requirements set forth in part 440.

Section 440.15(e) would further require the licensee to maintain, and make available for inspection by the Office upon request, all required policies of insurance and other documents necessary to demonstrate compliance with part 440 requirements. Although this section essentially imposes a mandatory recordkeeping requirement upon the licensee, the Office believes that the maintenance and administration of these records by the licensee is consistent with the Office's regulatory authority to monitor compliance with the license. Moreover, it is considerably less burdensome and time-consuming for both the Office and the licensee than requiring submittal of all the policy documents to the Office.

Proposed § 440.15(f) recognizes that the licensee may propose to satisfy financial responsibility requirements in a form other than insurance. A licensee may do so, provided it otherwise satisfies regulatory requirements. In practice, licensees have furnished insurance in order to meet the financial responsibility requirements prescribed by the Office pursuant to the statue. Under existing insurance market conditions, third-party liability insurance is obtainable to prescribed limits at reasonable cost. A presentation by the Risk Management Working Group of the COMSTAC at its meeting on May 18, 1995, projected market capacity as sufficient to satisfy launch insurance demand in 1995. In addition, property insurance, where required, may be accommodated within the licensee's existing property and casualty insurance program and is therefore easily obtained.

While the Act does state that a licensee may demonstrate financial responsibility in a form other than insurance, it does not specify what other forms of financial responsibility would be acceptable. A number of alternatives are possible and the Office necessarily will examine any proposal for demonstrating financial responsibility through alternative means on a case-by-case basis to determine whether it otherwise satisfies the requirements for demonstrating financial responsibility.

Section 440.17—Reciprocal Waiver of Claims Requirements

This section, as proposed, establishes requirements for reciprocal waivers of claims among launch participants. These requirements are additional conditions of a license.

Proposed § 440.17(b) would implement 49 U.S.C. 70112(b)(1), which requires the licensee to implement reciprocal waivers of claims with its contractors and subcontractors, its customers, and the contractors and subcontractors of its customer, whereby each party agrees to be responsible for loss or damage it sustains. Parties to a waiver of claims agreement waive two types of claims: Claims for their own property damage, and claims they may have against another launch participant as a result of losses for property damage or bodily injury sustained by their employees, resulting from licensed launch activities.

49 U.S.C. 70112(b)(2) requires the Secretary of Transportation, for the United States, its agencies involved in licensed launch activities, and its contractors and subcontractors, to enter into reciprocal waivers of claims with the licensee, its customer, and their respective contractors and subcontractors involved in launch services. In the Office's view, the purpose of this provision is to establish the Government's waiver of claims against the private sector launch participants and acceptance of responsibility for property damage that exceeds the level of Government property insurance obtained by the licensee under 49 U.S.C. 70112(a)(1)(B).

The approach taken in proposed § 440.17(c), of requiring a formal three-party agreement among the United States, the licensee and its customer, deviates from the form suggested by a literal reading of the Act. However, the Office believes that this approach is the most desirable and efficient one to effectuate the overall purpose of the statutory reciprocal waiver of claims requirements: To limit the universe of potential claims that could arise out of licensed launch activities, and to eliminate the need for each participant in licensed launch activities to obtain separate liability insurance protection against such claims. This approach has also proved manageable for the launch services industry in executing agreements with customers and the U.S. Government.

Section 440.17(c), as proposed, would require that the licensee, its customer and the Department of Transportation on behalf of the U.S. Government enter into a three-party agreement as set forth in appendix II to part 440. The form of the Agreement for Waiver of Claims and Assumption of Responsibility (Agreement) presented in Appendix II deviates from the current practice of the Office and is intended to clarify the scope of the waiver that the United States provides when it is involved in licensed launch activities, and the waiver it requires in return. Simply put, the Department of Transportation, on behalf of the United States, its agencies involved in licensed launch activities, and its contractors and subcontractors, would agree to waive claims against the

licensee, its customer and the contractors and subcontractors of the licensee and its customer, and accept responsibility for losses to property of the Government launch participants, only to the extent that such claims exceed the level of insurance the licensee must obtain under § 440.9(d). As a reciprocal undertaking, the licensee and its customer each would waive claims against the other party and the United States and its agencies involved in licensed launch activities, and against the contractors and subcontractors of each of those parties, and accept responsibility for damage to its own property and losses sustained by its own employees, respectively.

Whereas other parties to the three-party reciprocal waiver of claims agreement would agree to waive and accept responsibility for claims for property damage or bodily injury sustained by its employees, the U.S. Government need not do so. Because Government personnel are third parties, their claims for bodily injury or property damage would be compensated by the third-party liability insurance the licensee is required to obtain. Claims in excess of required insurance would become eligible for payment by the Government under the payment of excess claims provisions of the statute. 49 U.S.C. 70113. Although the approach reflected in the proposed form of Agreement is not currently reflected in existing license orders, the Office believes it more accurately reflects the allocation of risks intended by the statute and correctly responds to the Government's inability under appropriations law to accede to unfunded contingent liability, unless so authorized.

In addition, under the proposed from of the Agreement, the licensee and its customer would further agree to extend, or flow down, the waiver obligations to their respective contractors and subcontractors, and all three principals to the Agreement—including the Department—would agree to indemnify the other parties from claims by their contractors and subcontractors arising out of the indemnifying party's failure properly to implement or extend the waiver.

One launch company has objected to the indemnification provisions required under the three-party reciprocal waiver of claims agreement currently employed by the Office and included in this proposal for all interparty waiver of claims agreements. In the launch company's view, this provision is not required by statute and adds liability and risk over and above that imposed by a breach of contract remedy, which the launch company believes would be the appropriate remedy for failure to flow down the cross-waiver requirement.

The Office's view is that a contractual undertaking to indemnify another party for one's own failure to implement properly the agreements flow-down requirements is preferable. It would provide a strong incentive for parties to be attentive to the flow-down requirement. This is significant because of the limitation on the Office's ability to monitor each licensee's and customer's cross-waivers with their myriad contractors and subcontractors. It would also provide a ready remedy for parties who sustain loss because of another party's failure to flow down the cross-waiver requirement.

In those situations where the licensee's customer is a Government agency, the provisions applicable to the customer are the same as those for an agency involved in licensed launch activities for purposes of the reciprocal waiver of claims requirement. However, because the Government property insurance requirement does not cover the Government payload, the Government waives claims for property damage and assumes responsibility for damage or loss to the payload from the first dollar of loss.

Some concern has been expressed within the commercial space launch industry over the assumption of responsibility for employee losses required of signatories to the waiver of claims agreement. In the Office's view, this is a risk that can be effectively managed without imposing unreasonable economic burdens on launch participants.

The assumption of responsibility by nongovernmental launch participants for their own employees' losses represents a mutual undertaking by each entity to cover losses of its employees. Although employees of nongovernmental launch participants would not be ''third parties'' whose claims are compensated under the liability insurance required under the proposed regulations, launch participants could protect themselves by ensuring that their general liability policies would respond to compensate such claims. The Office believes that a variety of measures may be utilized by launch participants to manage the mandatory assumption of responsibility. At the same time, the objective of the risk allocation scheme—to limit the need for each launch participant to obtain broad liability coverage to protect itself from the universe of potential third-party claims—would be realized. The Office requests comments on its approach to implementing the waiver of claims and assumption of responsibility requirements of the Act. In doing so, commenters should bear in mind that there is no indication in the Act or its legislative history that employees of nongovernmental launch participant, unlike employees of Government launch participants, are intended to be included in the definition of ''third parties'' for purposes of these regulations. Nor is there any indication that the Government would agree to pay their claims as excess third-party claims (so-called ''indemnification'') to the extent employees' claims exceed required insurance. Moreover, considering employees of launch participants as third parties under the statutory definition would run counter to the assumption of responsibility for their loses mandated by the statute. Also, if such employees were included as ''third parties,'' the amount of third-party liability coverage the licensee would be required to obtain would likely increase significantly.

It is important to note that not all private participants in licensed launch activities are necessarily expected to accede to the reciprocal waiver of claims scheme in order to effect its purpose. Only those participants who have their personnel or property involved in licensed launch activities, and who may make claims against other participants as a result of loss or damage sustained by their personnel or property in the event of an accident, should be expected to enter into reciprocal waivers of claims. If all participants having personnel or property involved in licensed launch activities have acceded to the reciprocal waiver scheme, they would be foreclosed from making any claims against each other.

A question has been raised by a payload company as to the Office's requirements when multiple customers contract with a launch operator for launch services or there is more than one customer's payload on the launch manifest for a single launch. In those cases, executing a single waiver of claims agreement that includes each customer as a party to the agreement, or executing separate but appropriately modified agreements, would serve to ensure all parties have been included and protected as intended.

There has been some question as to the meaning and appropriate implementation of the provision in 49 U.S.C. 70112(b)(2), which requires the Secretary to enter into reciprocal waivers of claims ''for'' the Government's contractors and subcontractors involved in launch services. The Office has interpreted this provision to mean that contractors and

subcontractors of the United States are intended to be included as beneficiaries of the waiver of claims by the licensee, the customer and their respective contractors and subcontractors; and that the United States, through its appropriate agencies involved in licensed activities, is responsible for protecting their interests.

The proposed form of Agreement set forth in Appendix II to the proposed regulation continues the current practice of excluding from the waiver and assumption of responsibility claims for bodily injury or property damage resulting from willful misconduct of the parties. It also continues the current practice of requiring that parties waive claims, regardless of fault. Questions have been raised as to whether claims resulting from gross negligence are also excluded from the intended scope of the waiver. The Office believes that carving out an exception for gross negligence from the reciprocal waiver of claims could result in parties attempting, in effect, to nullify or avoid required waivers of claims by alleging sufficient evidence of gross negligence to withstand legal challenge, thereby defeating one of the purposes of the Agreement. The Office has not elected to do so in the proposed form of Agreement.

The Office believes its approach is consistent with the statutory intent of requiring launch participants to enter into a no-fault waiver of claims agreement in order to eliminate the need for additional insurance to protect against claims for damage caused by a party to the launch to any other party to the launch and to limit the total universe of claims resulting from a launch. Comments are solicited from the public on the proposed Agreement implementing 440.11(b), which is set out in Appendix II to the proposed regulation. If differs from the form that currently accompanies financial responsibility license orders but more closely conforms to the Office's view of the objectives of the statutory waiver requirements. A part to the Agreement wishing to modify its form may petition the Associate Administrator under the procedures set forth in 404.3 of the Regulations.

Section 440.19—United States Payment of Excess Third-Party Liability Claims

Payment by the United States of successful claims of third parties resulting from licensed launch activities, as provided in 49 U.S.C. 70113, is subject to appropriations laws or enactment of other legislative authority providing for the payment of claims submitted as part of a compensation plan prepared by the Office. The total amount of excess third-party claims that may be paid by the United States will not be greater than $1,500,000,000 (as adjusted for inflation occurring after January 1, 1989) above the amount of insurance required under § 440.9(c). However, to the extent a third-party claim results from the willful misconduct of a launch participant, the Government is not required to provide for payment of the claim. The statute limits this exception to willful misconduct by a licensee or transferee; however, the Office believes that any launch participant's willful misconduct relieves the Government from providing for payment of third-party claims against that launch participant under 49 U.S.C. 70113(a)(2).

In the event a successful claim is not covered by required insurance due to a policy exclusion that is found to be usual because insurance is not commercially available at reasonable cost, the Government would pay such claims from the first dollar of loss up to $1,500,000,000 (as adjusted for inflation occurring after January 1, 1989), again, subject to appropriate legislative action.

Excluded from the statutory obligation of the Secretary of Transportation to provide for payment of successful third-party claims are claims against contractors and subcontractors of the United States and its agencies involved in licensed activities. It has been suggested that this exclusion was inadvertent, and the Office believes that this is the better view. On the other hand, the Office is mindful of the availability of Government indemnification that may benefit such contractors and subcontractors pursuant to statutes other than 49 U.S.C. Subtitle IX. However, provision of this protection by the Government to its contractors and subcontractors may be made only under certain narrow circumstances, and is not routinely done. Where it is not done, a Government contractor or subcontractor would be required to purchase liability insurance to protect itself from third-party claims in excess of the liability policy obtained by the licensee, and would pass the cost through to the Government as an allowable cost under the contract. Therefore, absent legislative clarification, the Office is of the view that the United States would afford its contractors and subcontractors the protections offered to other launch participants under the payment of excess claims provisions of the statute, after the limits of the liability policy obtained by the licensee have been reached. However, this approach is not intended to interfere with or encumber the Government's enforcement of contractual rights and remedies with respect to its contractors. Public comment is sought as to whether this interpretation of 49 U.S.C. 70113 is in keeping with the overall risk allocation scheme of the Act.

Under proposed § 440.19(d), the Government would pay claims from the first dollar of loss upon expiration of the prescribed period of time for which the licensee is responsible for maintaining financial responsibility. Industry representatives have suggested that the Government's obligation to pay claims remains for three years following the launch event. However, the statutory payment of excess claims provision is limited to a successful claim of a third party against a launch participant ''resulting from an activity carried out under the license * * * for death, bodily injury or property damage or loss resulting from an activity carried out under the license.'' The statute further limits payment of excess claims ''to the extent the total amount of successful claims related to one launch'' exceeds the required amount of third-party liability insurance and is not more than $1,500,000,000 above that amount. 49 U.S.C. 70113(a). The Office believes that these provisions may be intended as a limitation on the claims that would be eligible for so-called indemnification by the Government. The Office requests comments on the nexus that must exist between a third-party claim and the licensed launch activity in order for the claim to be eligible for payment by the Government.

Proposed § 440.19(e) would establish procedural conditions for invoking the Government's payment of excess third-party claims provisions of the Act, including notice and participation or assistance in the defense by the United States of any claim or lawsuit by a third party arising out of licensed launch activities. This is consistent generally with the Government's usual practice for responding to similar claims.

Some industry representatives, as well as the COMSTAC, have recommended that the statutory provisions for Government payment of excess third-party claims should be memorialized in a contract between the United States Government and the intended beneficiaries of these provisions, similar to the indemnification agreements the Nuclear Regulatory Commission is required to enter into on behalf of the United States under the 1988 Price-Anderson Amendments, Pub. L. 100–408, to protect licensed operators of nuclear reactors from catastrophic losses. The Office believes that 49 U.S.C. 70113

does not constitute or establish an indemnification *obligation* on the part of the United States like that set forth in the Price-Anderson regime which, among other things, expressly requires a contractual undertaking and specifies necessary contractual provisions. 42 U.S.C. 2210. In contrast, 49 U.S.C. 70113 is largely procedural in nature. Any payment that the Secretary proposes be made under the statute is contingent on Congressional approval of a compensation plan and appropriation of funds or other legislative authority. Accordingly, the recommendation to reflect the Government's agreement for payment of excess claims in a contract is not included in this proposal.

As provided the statute and proposed section 440.19(f), in the event of catastrophic losses, the Office would prepare a compensation plan specifying the total amount of claims, suggesting sources of funding that may be available to pay the claims, and proposing any legislation necessary to authorize appropriation of funds and otherwise implement the plan. In addition, as provided by the Act, the Office is authorized to withhold payment of a claim that has not been decided by a Federal court if the Office finds the amount is unreasonable.

The Office welcomes comments from the public on appropriate implementation of 49 U.S.C. 70113 payment provisions. Comments would assist the Office in developing a future rulemaking that would address, more specifically, the mechanism for seeking payment by the Government of excess third-party claims.

Statutory Authority for This Proposed Rule

This proposal is issued pursuant to 49 U.S.C. Subtitle IX, ch. 701—Commerical Space Launch Activities, sections 70101–70119, formerly the Commercial Space Launch Act of 1984 (CSLA), as amended (49 U.S.C. App. 2601–2623). In 1988, Congress amended the CSLA by replacing general insurance requirements with a detailed financial responsibility and allocation of risk regime for licensed operations. The provisions, referred to as the 1988 Amendments, include procedures whereby the United States Government requires risk-based insurance to compensate for third-party liability and Government property damage claims, waives certain claims for its property damage and, subject to an appropriation law or other legislative authority, agrees to provide for payment of third-party claims in excess of required liability insurance. In addition, the 1988 Amendments require launch participants to enter into reciprocal waivers of claims in which the parties agree to absorb certain losses and the nongovernmental launch participants agree to be responsible for claims of their employees for damage or loss.

The Office has been implementing the 1988 Amendments on a case-by-case basis, through license orders issued with each license authorizing commercial space launch activities. Based upon its experience, the Office proposes to standardize requirements into rules of general applicability, wherever practicable.

Under 49 U.S.C. Subtitle IX, ch. 701, the Secretary is responsible for licensing and otherwise regulating commercial space launches and the commercial operation of launch sites carried out within the United States or by its citizens. In doing so, the Secretary is charged with protecting public health and safety, safety of property, and United States national security and foreign policy interests, and must ensure compliance with international treaty obligations of the United States, including the United Nations Treaties on Outer Space. The Secretary is also responsible for establishing requirements for proof of financial responsibility and other assurances necessary to protect the Government and its agencies and personnel from certain losses as a result of licensed activities involving Government facilities or personnel. 49 U.S.C. 70112(e).

The Associate Administrator for Commercial Space Transportation of the Federal Aviation Administration was delegated the Secretary's authority for carrying out the Secretary's responsibilities under the statute, effective November 15, 1995. The Commercial Space Transportation Licensing Regulations set forth in 14 CFR Ch. III apply to regulatory activities administered by the Office.

Paper Work Reduction Act

14 CFR part 440, as proposed, contains information collection requirements. In accordance with the Paperwork Reduction Act of 1995, 44 U.S.C. 3501 *et seq.*, the information collection requirements associated with this rule are being submitted to the Office of Management and Budget for review. The required information will be used to determine appropriate levels of financial responsibility and to determine whether licensees have complied with financial responsibility requirements as set forth in regulations and in a license order issued by the Office. The information to be collected includes data required for determining maximum probable loss, the three-party cross-waiver of claims agreement and evidence of insurance or other form of financial responsibility. Launch licensees must demonstrate financial responsibility at least 30 days before commencing licensed launch activities. The frequency of required submissions may depend upon the frequency of licensed launch activities; however, a license may authorize more than one launch. Respondents are all licensees authorized to conduct licensed launch activities. In addition to the licensee, its customers and the contractors and subcontractors of each are required to enter into reciprocal waiver of claims agreements. Estimated Average Burden Hours Per Respondent: 261 hours.

The Office considers comments by the public on the proposed collection of information in order to evaluate the accuracy of the Office's estimate of the burden of the proposed collection of information, the quality, utility and clarity of the information to be collected, and possible ways to minimize the burden of the collection.

In submitting comments to OMB, commenters should keep in mind that OMB is required to make a decision concerning the collection of information contained in the proposed regulations between 30 and 60 days after publication of this document in the Federal Register.

Comments on the proposed information collection requirements should be submitted to: Office of Management and Budget, Washington, DC 20503, Attention: Desk Officer for the Federal Aviation Administration, U.S. Department of Transportation. It is requested that comments sent to OMB also be sent to the rulemaking docket for this proposed action, Room 612, Federal Aviation Administration, U.S. Department of Transportation, 800 Independence Avenue, SW., Washington, DC 20591.

Impact Analyses

Proposed changes to Federal regulations must undergo several economic analyses. First, Executive Order 12866 directs that agencies shall propose or adopt a regulation only upon a determination that the benefits of the intended regulation justify its costs. Second, the Regulatory Flexibility Act of 1980 requires agencies to analyze the economic effect of regulatory changes on small entities. Third, the Office of Management and Budget (OMB) directs agencies to assess the effect of regulatory changes on international trade. In addition, under regulatory policies and procedures of the Department of Transportation (44 FR

11034; February 26, 1979), this proposed rule is considered significant because there is substantial public interest in the rulemaking. This rule has been reviewed by OMB under Executive Order 12866.

Economic Impacts

Executive Order 12866 directs that each Federal agency proposing to adopt a regulation may do so only upon a reasoned determination that the benefits of the intended regulation justify its costs. The Office has prepared a detailed analysis of the economic effects that would be associated with the proposed rule. Its findings are set forth in an economic impact assessment, copies of which are available from the FAA Rules Docket. As part of its analysis, the Office considered alternatives, taking into account that the principal requirements of the proposed rule are mandated by statute.

Under the 1988 Amendments, as implemented by the Office in regulations, required insurance would be available to compensate third parties, including certain Government personnel, who may suffer bodily injury or property damage as a result of licensed launch activities. Additionally, required insurance protects all launch participants from third party claims and provides cost savings to each participant by relieving them of the need to obtain separate liability insurance covering those risks. Potential costs of litigation should be eliminated as a result of required cross-waivers of claims among launch participants. There is a reallocation of expected costs of claims of $20,000 over a four-year period from the U.S. commercial space launch industry to the United States, as a consequence of the Government's payment of excess third-party claims under the Act, up to a $1.5 billion exposure for liability. Additional costs to the Government to administer requirements imposed under the 1988 Amendments and the proposed regulations are expected to have an upper limit of $673,000 over four years.

Impacts on Small Entities

The Regulatory Flexibility Act of 1980 (RFA) was enacted by Congress to ensure that small entities are not unnecessarily or disproportionately burdened by Federal regulations. The Office analyzed the economic impact of the proposed regulations on small commercial entities, as part of its economic impact assessment. For purposes of the analysis, the Office utilized the Standard Industrial Classification codes and size standards for business entities relating to space vehicles, which define small entities as those comprised of fewer than 1000 employees. 13 CFR 121.601. Because the commercial launch industry is evolving new ways of doing business, the Office also considered as small commercial entities those firms offering or planning to offer commercial space transportation services that have not had long-term relationships with the U.S. Government as a contractor-manufacturer of expendable launch vehicles or components, or have not received rights to use government-developed launch vehicles. These are few in number.

The economic impacts on small commercial entities resulting from the 1988 Amendments to the Act are largely benefits. The Office's analysis reveals only non-quantifiable costs to commercial entities as a result of the proposed regulations. They include minimal paperwork costs and costs that may result from having to obtain insurance in advance of licensed launch activities to demonstrate compliance with financial responsibility requirements. Neither of these costs would have a disproportionate impact on small commercial entities. Based upon the Office's economic impact assessment, the Office has determined that the proposed rule would not have a significant economic impact on a substantial number of small entities.

International Trade Impact Assessment

The impact of the proposed rule on international trade is expected to be beneficial. The proposal rule would codify in regulations the financial responsibility and allocation of risk requirements imposed under the 1988 Amendments to the Commercial Space Launch Act of 1984, codified at 49 U.S.C. Subtitle IX, ch. 701. One of the primary objectives of the 1988 Amendments was to enable U.S. launch services providers to compete more effectively with foreign competitors.

Customers may enjoy enhanced understanding of the benefits and responsibilities that attend licensed launch activities carried out within the United States or by its citizens. By clarifying the U.S. Government's agreement, subject to appropriations laws or other additional legislative authority, to provide for the payment of excess third-party claims above required insurance, the proposed regulations may enable U.S. companies to negotiate more effectively with foreign customers who must choose between U.S. and other competing launch services providers.

Federalism Implications

The proposed regulations would not have substantial direct effects on the states, on the relationship between the Federal government and the states, or on the distribution of power and responsibilities among the various levels of government. Therefore, in accordance with Executive Order 12612, it is determined that the proposed regulation does not have sufficient federalism implications to warrant the preparation of a Federalism Assessment.

List of Subjects in 49 CFR Part 440

Armed forces; Claims; Federal building and facilities; Government property; Indemnity payments; Insurance; Reporting and recordkeeping requirements; Rockets; Space transportation and exploration.

Proposed Regulation

In consideration of the foregoing, the Office of the Associate Administrator for Commercial Space Transportation proposes to amend the Commercial Space Transportation Licensing Regulations, 14 CFR Ch. III, as follows:

1. Subchapter C of Chapter III, Title 14, Code of Federal Regulations, would be amended by adding a new part 440 to read as follows:

PART 440—FINANCIAL RESPONSIBILITY

Subpart A—Financial Responsibility for Licensed Launch Activities

Sec.
440. 1 Scope; Basis.
440. 3 Definitions.
440. 5 General.
440. 7 Determination of maximum probable loss.
440. 9 Insurance requirements for licensed launch activities.
440. 11 Duration of coverage; modifications.
440. 13 Standard conditions of insurance coverage.
440. 15 Demonstration of compliance.
440. 17 Reciprocal waiver of claims requirement.
440. 19 United States payment of excess third-party liability claims.

Authority: 49 U.S.C. 70101–70119; 49 CFR 1.47.

§ 440.1 Scope; Basis.

This part sets forth financial responsibility and allocation of risk requirements applicable to commercial space launch activities that are authorized to be conducted under a launch license issued pursuant to this subchapter.

§ 440.3 Definitions.

(a) For purposes of this part—

(1) *Bodily injury* means physical injury, sickness, disease, disability, shock, mental anguish, or mental injury sustained by any person, including death.

(2) *Contractors and subcontractors* means those entities that are involved at any tier, directly or indirectly, in licensed launch activities, and includes suppliers of property and services, and the component manufacturers of a launch vehicle or payload.

(3) *Customer* means the person who procures launch services from the licensee, and any person to whom the customer has sold, leased, assigned, or otherwise transferred its rights in the payload (or any part thereof) to be launched by the licensee, including a conditional sale, lease, assignment, or transfer of rights.

(4) *Federal range facility* means a Government-owned installation at which launches take place.

(5) *Financial responsibility* means statutorily required financial ability to meet liability as required under 49 U.S.C 70101–70119.

(6) *Government personnel* means employees of the United States, its agencies, and its contractors and subcontractors, involved in launch services for licensed launch activities. Employees of the United States include members of the Armed Forces of the United States.

(7) *Hazardous operations* means activities, processes, and procedures that, because of the nature of the equipment, facilities, personnel, or environment involved or function being performed, may result in bodily injury or property damage.

(8) *Liability* means a legal obligation to pay claims for bodily injury or property damage resulting from licensed launch activities.

(9) *License* means an authorization to conduct licensed launch activities, issued by the Office under this subchapter.

(10) *Licensed launch activities* means the launch of a launch vehicle as defined in a regulation or license issued by the Office and carried out pursuant to a license.

(11) *Maximum probable loss* (MPL) means the greatest dollar amount of loss for bodily injury or property damage that is reasonably expected to result from licensed launch activities;

(i) Losses to third parties, excluding Government personnel, that are reasonably expected to result from licensed launch activities are those having a probability of occurrence on the order of no less than one in ten million.

(ii) Losses to Government property and Government personnel that are reasonably expected to result from licensed launch activities are those having a probability of occurrence on the order of no less than one in one hundred thousand.

(12) *Office* means the Associate Administrator for Commercial Space Transportation of the Federal Aviation Administration, U.S. Department of Transportation.

(13) *Property damage* means partial or total destruction, impairment, or loss of tangible property, real or personal.

(14) *Regulations* means the Commercial Space Transportation Licensing Regulations, codified at 14 CFR Ch. III.

(15) *Third party* means.

(i) Any person other than:

(A) The United States, its agencies, and its contractors and subcontractors involved in launch services for licensed launch activities;

(B) The licensee and its contractors and subcontractors involved in launch services for licensed launch activities; and

(C) The customer and its contractors and subcontractors involved in launch services for licensed launch activities.

(ii) Government personnel, as defined in this section, are third parties. For purposes of these regulations, employees of other launch participants identified in paragraphs (a)(15)(i)(B) and (C) of this section are not third parties.

(16) *United States* means the United States Government, including its agencies.

(b) Except as otherwise provided in this section, any term used in this part and defined in 49 U.S.C. 70101–70119, or in § 401.5 of this chapter shall have the meaning contained therein.

§ 440.5 General.

(a) No person shall commence or conduct launch activities that require a license unless that person has obtained a license and fully demonstrated compliance with the financial responsibility and allocation of risk requirements set forth in this part.

(b) The Office shall prescribe the amount of financial responsibility a licensee is required to obtain, and any additions to or modifications of the amount, in a license order issued concurrently with or subsequent to the issuance of a license.

(c) Demonstration of financial responsibility under this part shall not relieve the licensee of ultimate responsibility for liability, loss, or damage sustained by the United States resulting from licensed launch activities, except to the extent that:

(1) Liability, loss, or damage sustained by the United States results from willful misconduct of the United States or its agents, including Government personnel;

(2) Covered claims by third parties for bodily injury or property damage arising out of any particular launch exceed the amount of financial responsibility required under § 440.9(c) of this part and do not exceed $1,500,000,000 (as adjusted for inflation occurring after January 1, 1989) above such amount, and are payable pursuant to 49 U.S.C. 70113 and § 440.19 of this part;

(3) Covered claims for property loss or damage exceed the amount of financial responsibility required under § 440.9(e) of this part; or

(4) The licensee has no liability for claims by third parties for bodily injury or property damage arising out of any particular launch that exceed $1,500,000,000 (as adjusted for inflation occurring after January 1, 1989).

(d) A licensee's failure to comply with the requirements in this part may result in suspension or revocation of a license, and subjects the licensee to civil penalties as provided in part 405 of this chapter.

§ 440.7 Determination of maximum probable loss.

(a) The Office shall determine the maximum probable loss (MPL) from claims by a third party for bodily injury or property damage, and the United States, its agencies, and its contractors and subcontractors for covered property damage or loss, resulting from licensed launch activities. The maximum probable loss determination forms the basis for financial responsibility requirements issued in a license order.

(b) The Office issues its determination of maximum probable loss no later than ninety days after a licensee or transferee has requested a determination and submitted all information required by the Office to make the determination. The Office shall consult with Federal agencies that are involved in, or whose personnel or property are exposed to risk of damage or loss as a result of, licensed launch activities before issuing a license order prescribing financial responsibility requirements and shall notify the licensee or transferee if timely issuance of the MPL determination is not possible due to interagency consultation.

(c) Information requirements for obtaining a maximum probable loss determination are set forth in Appendix I to this part. Any person requesting a determination of maximum probable loss shall submit information in accordance with Appendix I requirements, unless the Office has waived requirements. In lieu of submitting required information, a person requesting a maximum probable loss determination may designate and

certify certain information previously submitted for a prior determination as complete, valid, and equally applicable to its current request. The requester is responsible for the continuing accuracy and completeness of information submitted under this part and shall promptly report any changes in writing.

(d) The Office shall amend a determination of maximum probable loss required under this section at any time prior to completion of licensed launch activities as warranted by supplementary information provided to or obtained by the Office after the MPL determination is issued. Any change in financial responsibility requirements as a result of an amended MPL determination shall be set forth in a license order.

(e) The Office may make a determination of maximum probable loss at any time other than as set forth in paragraph (b) of this section upon request by any person.

§ 440.9 Insurance requirements for licensed launch activities.

(a) As a condition of each launch license, the licensee shall comply with insurance requirements set forth in this section and in a license order issued by the Office, or may otherwise demonstrate the required amount of financial responsibility.

(b) The licensee shall obtain and maintain in effect a policy or policies of liability insurance, in an amount determined by the Office under paragraph (c) of this section, that protects the following persons as additional insureds to the extent of their respective potential liabilities against claims by a third party for bodily injury or property damage resulting from licensed launch activities:

(1) The licensee, its customer, and their respective contractors and subcontractors;

(2) The United States, its agencies, and its contractors and subcontractors; and

(3) Government personnel.

(c) The Office shall prescribe for each licensee the amount of insurance required to compensate the total of third-party claims for bodily injury or property damage resulting from licensed launch activities in connection with any particular launch. The amount of insurance required is based upon the Office's determination of maximum probable loss; however, it will not exceed the lesser of:

(1) $500 million; or

(2) The maximum liability insurance available on the world market at a reasonable cost, as determined by the Office.

(d) The licensee shall obtain and maintain in effect a policy or policies of insurance, in an amount determined by the Office under paragraph (e) of this section, that covers claims by the United States, it agencies, and its contractors and subcontractors for property damage or loss resulting from licensed launch activities. Property covered by this insurance shall include all property owned, leased, or occupied by, or within the care, custody, or control of, the United States, its agencies, and its contractors and subcontractors, at a Federal range facility. Insurance shall protect the United States, its agencies, and it contractors and subcontractors.

(e) The Office shall prescribe for each licensee the amount of insurance required to compensate claims for property damage under paragraph (d) of this section resulting from licensed launch activities in connection with any particular launch. The amount of insurance is based upon a determination of maximum probable loss; however, it will not exceed $100 million.

(f) In lieu of a policy of insurance, a licensee may demonstrate financial responsibility in another manner meeting the terms and conditions applicable to insurance as set forth in this part. The licensee shall describe in detail the method proposed for demonstrating financial responsibility and how it assures that the licensee is able to cover claims as required under this part.

§ 440.11 Duration of coverage; modifications.

(a) Insurance coverage required under § 440.9, or other form of financial responsibility, shall attach upon commencement of licensed launch activities, and remain in full force and effect until the later of completion of licensed launch activities as defined by the Office in regulations, or until risk to third parties and Government property as a result of licensed launch activities is sufficiently small, as determined by the Office through the risk analysis conducted to determine MPL, that financial responsibility is no longer necessary. The required duration of financial responsibility shall be specified in a license order, and may be amended in the event a launch anomaly results in additional risks to third parties or Government property.

(b) Financial responsibility required under this part may not be replaced, canceled, changed, withdrawn, or in any way modified to reduce the limits of liability or the extent of coverage, nor expire by its own terms, prior to the time specified in a license order, unless the Office is notified in advance and expressly approves the modification.

§ 440.13 Standard conditions of insurance coverage.

(a) Insurance obtained under § 440.9 shall comply with the following terms and conditions of coverage:

(1) Bankruptcy or insolvency of an insured, including any additional insured, shall not relieve the insurer or any or its obligations under any policy.

(2) Policy limits shall apply separately to each occurrence and to the total claims arising out of licensed launch activities in connection with any particular launch.

(3) Except as provided herein, each policy shall pay claims from the first dollar of loss, without regard to any deductible, to the limits of the policy. A licensee may obtain a policy containing a deductible amount if the amount of the deductible is placed in an escrow account or otherwise demonstrated to the unobligated, unencumbered funds of the licensee, available to compensate claims at any time claims may arise.

(4) Policies shall not be invalidated by any action or inaction of the licensee or any additional insured, including nonpayment by the licensee of the policy premium, and shall insure the licensee and each additional insured regardless of any breach or violation of any warranties, declarations, or conditions contained in the policies by the licensee or any additional insured (other than a breach of violation by the licensee or an additional insured, and then only as against that licensee or additional insured).

(5) Exclusions from coverage shall be specified.

(6) Insurance shall be primary without right of contribution from any other insurance that is carried by the licensee or any additional insured. Each policy shall expressly provide that all of its provisions, except the policy limits, operate in the same manner as if there were a separate policy with and covering the licensee and each additional insured.

(7) Each policy shall be placed with an insurer of recognized reputation and responsibility that is licensed to do business in any State, territory, possession of the United States, or the District of Columbia.

(8) Except as to claims resulting from the willful misconduct of the United States or its agents, the insurer shall waive any and all rights of subrogation against each of the parties protected by required insurance.

(b) [Reserved]

§ 440.15 Demonstration of compliance.

(a) A licensee must submit evidence of financial responsibility and compliance with allocation of risk requirements under this part, as follows, unless a licensee order specifies fewer days due to the proximity of the licensee's intended date for commencement of licensed launch activities:

(1) The three-party cross-waiver of claims agreement required under § 440.17(c) of this part shall be submitted at least 30 days before commencement of licensed launch activities;

(2) Evidence of insurance shall be submitted at least 30 days before commencement of licensed launch activities; and

(3) Evidence of financial responsibility in a form other than insurance, ad provided under § 440.9(f) of this part, shall be submitted at least 60 days before commencement of licensed launch activities.

(b) Upon a complete demonstration of compliance with financial responsibility and allocation of risk requirements under this part, the requirements shall preempt any provisions in agreements between the licensee and an agency of the United States governing access to or use of United States launch property or launch services for licensed launch activities which address financial responsibility, allocation of risk and related matters covered by 49 U.S.C. 70112, 70113.

(c) A licensee must demonstrate compliance as follows:

(1) The licensee shall provide proof of insurance required under § 440.9 by:

(i) Certifying to the Office that it has obtained insurance in compliance with the requirements of this part and any applicable license order;

(ii) Filing with the Office one or more certificates of insurance evidencing insurance coverage by one or more insurers under a currently effective and properly endorsed policy or policies of insurance, applicable to licensed launch activities, on terms and conditions and in amounts prescribed under this part, and specifying policy exclusions;

(iii) In the event of any policy exclusions or limitations of coverage that may be considered usual under § 440.19(c) of this part, or for purposes of implementing the Government's waiver of claims for property damage under the Act, certifying that insurance covering the excluded risks is not commercially available at reasonable cost; and

(iv) Submitting to the Office, for signature by the Department on behalf of the United States Government, the duly executed waiver of claims and assumption of responsibility agreement required by § 440.17(c) of this part.

(2) Certifications required under this section shall be signed by a duly authorized officer of the licensee.

(d) Certificate(s) of insurance required under paragraph (c)(1)(ii) of this section shall be signed by the insurer issuing the policy and accompanied by an opinion of the insurer that the insurance obtained by the licensee complies with the specific requirements for insurance set forth in this part and any applicable license order.

(e) The licensee shall maintain, and make available for inspection by the Office upon request, all required policies of insurance and other documents necessary to demonstrate compliance with this part.

(f) In the event the licensee demonstrates financial responsibility using means other than insurance, as provided under § 440.9(f) of this part, the licensee shall provide proof that it has met the requirements set forth in this part and in a license order issued by the Office.

§ 440.17 Reciprocal waiver of claims requirements.

(a) As a condition of each launch license, the licensee shall comply with reciprocal waiver of claims requirements as set forth in this section.

(b) The licensee shall implement reciprocal waivers of claims with its contractors and subcontractors, its customer(s) and the customer's contractors and subcontractors, under which each party waives and releases claims against the other parties to the waivers and agrees to assume responsibility for property damage it sustains and for bodily injury or property damage sustained by its own employees resulting from licensed launch activities, regardless of fault.

(c) For each licensed launch in which the U.S. Government, its agencies, or its contractors and subcontractors is involved in licensed launch activities or where property insurance is required under § 440.9(d) of this part, the Department of Transportation, the licensee, and its customer shall enter into a three-party reciprocal waiver of claims agreement in the form set forth in Appendix II to this part. If the licensee's customer is an agency of the U.S. Government, the Agreement shall be modified to reflect that, for purposes of the Agreement, the customer is a Government agency involved in licensed launch activities except that the government customer waives claims and accepts responsibility for damage or loss to its property.

(d) The licensee, its customer, and the United States but only to the extent provided in legislation, shall agree in any waiver of claims agreements required under this part to indemnify another party to the agreement from claims by the indemnifying party's contractors and subcontractors arising out of the indemnifying party's failure to implement properly the waiver requirement.

§ 440.19 United States payment of excess third-party liability claims.

(a) The United States shall pay successful claims (including reasonable expenses of litigation or settlement) of a third party against the licensee, the customer, and the contractors and subcontractors of the licensee and the customer, and the contractors and subcontractors of the United States and its agencies involved in licensed launch activities to the extent provided in an appropriation law or other legislative authority providing for payment of claims in accordance with 49 U.S.C. 70113, and to the extent the total amount of such claims arising out of any particular launch:

(1) Exceeds the amount of insurance required under § 440.9(b); and

(2) Is not more than $1,500,000,000 (as adjusted for inflation occurring after January 1, 1989) above that amount.

(b) Payment by the United States under paragraph (a) of this section shall not be made for any part of such claims for which the bodily injury or property damage results from willful misconduct by the party seeking payment.

(c) The United States shall provide for payment of claims by third parties for bodily injury of property damage that are payable under 49 U.S.C. 70113 and not covered by required insurance under § 440.9(b), without regard to the limitation under paragraph (a)(1) of this section, because of an insurance policy exclusion that is usual. A policy exclusion is considered usual only if insurance covering the excluded risk is not commercially available at reasonable rates. The licensee must submit a certification in accordance with § 440.15(c)(1)(iii) of this part for the United States to cover such claims.

(d) Upon the expiration of the policy period prescribed in accordance with § 440.11(a), the United States shall provide for payment of claims that are payable under 49 U.S.C. 70113 from the first dollar of loss up to $1,500,000,000 (as adjusted for inflation occurring after January 1, 1989).

(e) Payment by the United States of excess third-party claims under 49 U.S.C. 70113 shall be subject to:

(1) Prompt notice by the licensee to the Office that the total amount of claims arising out of licensed launch activities exceeds, or is likely to exceed, the required amount of financial responsibility. For each claim, the notice must specify the nature, cause, and amount of the claim or lawsuit associated with the claim, and the party or parties who may otherwise be liable for payment of the claim;

(2) Participation or assistance in the defense of the claim or lawsuit by the United States, at its election;

(3) Approval by the Office of any settlement, or part of a settlement, to be paid by the United States; and

(4) Approval by Congress of a compensation plan prepared by the Office and submitted by the President.

(f) The Office will:

(1) Prepare a compensation plan outlining the total amount of claims and meeting the requirements set forth in 49 U.S.C. 70113;

(2) Recommend sources of funds to pay the claims; and

(3) Propose legislation as required to implement the plan.

(g) The Office may withhold payment of a claim if the Office finds that the amount is unreasonable, unless it is the final order of a United States Court.

Appendix I—Information Requirements for Obtaining a Maximum Probable Loss Determination for Licensed Launch Activities

Any person requesting a maximum probable loss determination shall submit the following information to the Office, unless the Office has waived a particular information requirement under 14 CFR 440.7(c):

I. General Information

A. Mission description.

1. A description of mission parameters, including:

a. Launch trajectory;

b. Orbital inclination; and

c. Orbit altitudes (apogee and perigee).

2. Flight sequence.

3. Staging events and the time for each event.

4. Impact locations.

5. Identification of the launch range facility, including the launch complex on the range, planned date of launch, and launch windows.

6. If the applicant has previously been issued a license to conduct launch activities using the same launch vehicle from the same launch range facility, a description of any differences planned in the conduct of proposed activities.

B. Launch Vehicle Description.

1. General description of launch vehicle and its stages, including dimensions.

2. Description of major systems, including safety systems.

3. Description of rocket motors and type of fuel used.

4. Identification of all propellants to be used and their hazard classification under the Hazardous Materials Table, 49 CFR 172.101.

5. Description of hazardous components.

C. Payload.

1. General description of the payload, including type (e.g., telecommunications, remote sensing), propellants, and hazardous components or materials, such as toxic or radioactive substances.

D. Flight Termination System.

1. Identification of any flight termination system (FTS) on the launch vehicle, including a description of operations and component location on the vehicle.

II. Pre-flight Processing Operations

A. General description of pre-flight operations including vehicle processing consisting of an operational flow diagram showing the overall sequence and location of operations, commencing with arrival of vehicle components at the launch range facility through final safety checks and countdown sequence, and designation of hazardous operations, as defined in 14 CFR 440.3. For purposes of these information requirements, payload processing, as opposed to integration, is not a hazardous operation.

B. For each hazardous operation, including but not limited to fueling, solid rocket motor build-up, ordnance installation, ordnance checkout, movement of hazardous materials, and payload integration:

1. Identification of location where each operation will performed, including each building or facility identified by name or number.

2. Identification of facilities adjacent to the location where each operation will be performed and therefore exposed to risk, identified by name or number.

3. Maximum number of third-party personnel, including but not limited to Government personnel, who may be exposed to risk during each operation. For Government personnel, identification of his or her employer.

4. Identification of launch range facility policies or requirements applicable to the conduct of operations.

III. Flight Operations

A. Identification of launch range facilities exposed to risk during launch vehicle lift-off and flight.

B. Identification of accident failure scenarios, probability assessments for each, and estimation of risks to third parties and Government property due to property damage or bodily injury. Scenarios shall cover the range of launch trajectories, inclinations and orbits for which authorization is sought in the license application. The estimation of risks for each scenario shall take into account the number of third parties at risk as a result of lift-off and flight of a launch vehicle (on-range, off-range, and down-range) and specific, unique facilities exposed to risk.

C. On-orbit risk analysis assessing risks posed by a launch vehicle to operational satellites.

D. Reentry risk analysis assessing risks to third parties as a result to reentering debris or reentry of the launch vehicle or its components.

E. Trajectory data as follows: Nominal and 3-sigma lateral trajectory data in x, y, z and X, Y, Z coordinates in one-second intervals, data to be pad-centered with x being along the initial launch azimuth and continuing through impact for suborbital flights, and continuing through orbital insertion or the end of powered flight for orbital flights.

F. Tumble-turn data for guided vehicles only, as follows: For vehicles with gimbaled nozzles, tumble turn data with zeta angles and velocity magnitudes stated. A separate table is required for each combination of fail times (every two to four seconds), and significant nozzle angles (two or more small angels, generally between one and five degrees).

G. Identification of debris lethal areas and the projected number and ballistic coefficient of fragments expected to result from flight termination, initiated either by command or self-destruct mechanism, for lift-off, land overflight, and reentry.

IV. Post-flight Processing Operations

A. General description of post-flight ground operations including overall sequence and location of operations for removal of vehicle components and processing equipment from the launch range facility and for handling of hazardous materials, and designation of hazardous operations.

B. Identification of all facilities used in conducting post-flight processing operations.

C. For each hazardous operation:

1. Identification of location where each operation is performed, including each building or facility identified by name or number.

2. Identification of facilities adjacent to location where each operation is performed and exposed to risk, identified by name or number.

3. Maximum number of third-party personnel, including but not limited to Government personnel, who may be exposed to risk during each operation. For Government personnel, identification of his or her employer.

4. Identification of launch range facility policies or requirements applicable to the conduct of operations.

Appendix II—Agreement for Waiver of Claims and Assumption of Responsibility

THIS AGREEMENT is entered into this ____ day of _____, by and among [Licensee] (the ''Licensee''), [Customer] (the ''Customer'') and the Department of Transportation, on behalf of the United States Government (collectively, the ''Parties''), to implement the provisions of section 440.7(c) of the Commercial Space Transportation Licensing Regulations, 14 CFR Ch. III (the ''Regulations'').

In consideration of the mutual releases and promises contained herein, the Parties hereby agree as follows:

1. Definitions

''Customer'' means the above-named Customer on behalf of the Customer and any

person to whom the Customer has sold, leased, assigned, or otherwise transferred its rights in the payload (or any part thereof) to be launched by the licensee, including a conditional sale, lease, assignment, or transfer of rights.

''License'' means License No. ____ issued on _____, by the Associate Administrator for Commercial Space Transportation, Federal Aviation Administration, Department of Transportation, to the Licensee, including all license orders issued in connection with the License.

''Licensee'' means the Licensee and any transferee of the Licensee under 49 U.S.C. Subtitle IX, ch. 701.

''United States Government'' means the United States, its agencies involved in Licensed Launch Activities, and its contractors and subcontractors involved in Licensed Launch Activities.

Except as otherwise defined herein, terms used in this Agreement and defined in 49 U.S.C. Subtitle IX, ch. 701—Commercial Space Launch Activities, or in the Regulations, shall have the same meaning as contained in 49 U.S.C. Subtitle IX, ch. 701, or the Regulations, respectively.

2. Waiver and Release of Claims

(a) Licensee hereby waives and releases claims it may have against Customer, Customer's Contractors and Subcontractors, and the United States Government, for Property Damage it sustains and for Bodily Injury or Property Damage sustained by its own employees, resulting from Licensed Launch Activities, regardless of fault.

(b) Customer hereby waives and releases claims it may have against Licensee, its Contractors and Subcontractors, and the United States Government, for Property Damage it sustains and for Bodily Injury or Property Damage sustained by its own employees, resulting from Licensed Launch Activities, regardless of fault.

(c) The United States Government hereby waives and releases claims it may have against Licensee and Customer, and against their respective Contractors and Subcontractors, for Property Damage it sustains, to the extent that claims it would otherwise have for such damage exceed the amount of insurance or demonstration of financial responsibility required under section 440.9(e) of the Regulations, 14 CFR § 440.9(e), regardless of fault.

3. Assumption of Responsibility

(a) Licensee and Customer shall each be responsible for Property Damage it sustains and for Bodily Injury or Property Damage sustained by its own employees, resulting from Licensed Launch Activities, regardless of fault.

(b) The United States Government shall be responsible for Property Damage it sustains, to the extent that claims it would otherwise have for such damage exceed the amount of insurance or demonstration of financial responsibility required under section 440.9(e) of the Regulations, 14 CFR § 449.9(e), regardless of fault.

4. Extension of Assumption and Waiver

(a) Licensee shall extend the waiver and release of claims and the requirement of the assumption of responsibility as set forth in paragraphs 2(a) and 3(a), respectively, to its Contractors and Subcontractors by requiring them to waive and release all claims they may have against Customer, Customer's Contractors and Subcontractors, and the United States Government, and to agree to be responsible, for Property Damage they sustain and for Bodily Injury or Property Damage sustained by their own employees, resulting from Licensed Launch Activities, regardless of fault.

(b) Customer shall extend the waiver and release of claims and the requirement of the assumption of responsibility as set forth in paragraphs 2(b) and 3(a), respectively, to its Contractors and Subcontractors by requiring them to waive and release all claims they may have against Licensee, the Licensee's Contractors and Subcontractors, and the United States Government, and to agree to be responsible, for Property Damage they sustain and for Bodily Injury or Property Damage sustained by their own employees, resulting from Licensed Launch Activities, regardless of fault.

5. Indemnification

(a) Licensee shall hold harmless and indemnify Customer and its directors, officers, servants, agents, subsidiaries, employee and assignees, or any of them, and the United States Government and its directors, officers, servants, agents, subsidiaries, employee and assignees, or any of them, from and against liability, loss or damage arising out of claims that Licensee's Contractors and Subcontractors may have for Property Damage sustained by them and for Bodily Injury or Property Damage sustained by their employees, resulting from Licensed Launch Activities.

(b) Customer shall hold harmless and indemnify Licensee and its directors, officers, servants, agents, subsidiaries, employees and assignees, or any of them, and the United States Government and its directors, officers, servants, agents, subsidiaries, employees and assignees, or any of them, from and against liability, loss or damage arising out of claims that Customer's Contractors and Subcontractors, or any person on whose behalf Customer enters into this Agreement, may have for Property Damage sustained by them and for Bodily Injury or Property Damage sustained by their employees, resulting from Licensed Launch Activities.

(c) To the extent provided in advance in an appropriation law or to the extent there is enacted additional legislative authority providing for the payment of claims, the United States shall hold harmless and indemnify Licensee and Customer and their respective directors, officers, servants, agents, subsidiaries, employees and assignees, or any of them, from and against liability, loss or damage arising out of claims that any person on whose behalf the Department enters into this Agreement may have for Property Damage sustained by them, resulting from Licensed Launch Activities.

6. Assurances under 49 U.S.C. 70112(e)

Notwithstanding any provision of this Agreement to the contrary, Licensee shall hold harmless and indemnify the United States Government and its agencies, servants, agents, employees and assignees, or any of them, from and against liability, loss or damage arising out of claims for Bodily Injury or Property Damage, resulting from Licensed Launch Activities, regardless of fault, except to the extent that: (i) As provided in section 7(b) of this Agreement, claims result from willful misconduct of the United States Government or its agents; (ii) claims for Property Damage sustained by the United States Government exceed the amount of insurance or demonstration of financial responsibility required under section 440.9(e) of the Regulations (14 CFR § 440.9(e)); (iii) claims by a Third Party for Bodily Injury or Property Damage exceed the amount of insurance or demonstration of financial responsibility required under section 440.9(c) of the Regulations (14 CFR § 440.9(c)), and do not exceed $1,500,000,000 (as adjusted for inflation after January 1, 1989) above such amount, and are payable pursuant to the provisions of 49 U.S.C. 70113 and section 440.19 of the Regulations (14 CFR § 440.19); or (iv) Licensee has no liability for claims exceeding $1,500,000,000 (as adjusted for inflation after January 1, 1989).

7. Miscellaneous

(a) Nothing contained herein shall be construed as a waiver or release by Licensee, Customer or the United States Government of any claim by an employee of the Licensee, Customer or the United States Government, respectively, including a member of the Armed Forces of the United States, for Bodily Injury or Property Damage, resulting from Licensed Launch Activities.

(b) Notwithstanding any provision of this Agreement to the contrary, any waiver, release, assumption of responsibility or agreement to indemnify herein shall not apply to claims for Bodily Injury or Property Damage resulting from willful misconduct of any of the Parties, the Contractors and Subcontractors of any of the Parties, and the directors, officers, agents and employees of any of the foregoing.

(c) In the event that more than one customer is involved in Licensed Launch Activities, references herein to Customer shall apply to, and be deemed to include, each such customer severally and not jointly.

(d) The Agreement shall be governed by and construed in accordance with United States Federal law.

In Witness Whereof, the Parties to this Agreement have caused the Agreement to be duly executed by their respective duly authorized representatives as of the date written above.

Licensee

By:
Its:

Customer

By:
Its:

Department of Transportation

By:
Its: Associate Administrator for Commercial Space Transportation, Federal Aviation Administration

Issued in Washington, DC., this 17th day of July 1996.

Patti Grace Smith,

Acting Associate Administrator for Commercial Space Transportation, Federal Aviation Administration.

[FR Doc. 96–18532 Filed 7–24–96; 8:45 am]

BILLING CODE 4910–13–M

federal register

Thursday
July 25, 1996

Part IV

Environmental Protection Agency

Cyanazine; Notice of Final Determination to Terminate Special Review of Cyanazine; Notice of Voluntary Cancellation and Cancellation Order of Cyanazine Product Registrations; Notice

ENVIRONMENTAL PROTECTION AGENCY

[OPP–30000/60B; FRL–5385–7]

Cyanazine; Notice of Final Determination to Terminate Special Review of Cyanazine; Notice of Voluntary Cancellation and Cancellation Order of Cyanazine Product Registrations

AGENCY: Environmental Protection Agency (EPA).

ACTION: Notice of Final Determination to Terminate Special Review; Notice of Voluntary Cancellation.

SUMMARY: This Notice announces the conclusion of the Special Review of cyanazine and EPA's acceptance of requests for the voluntary cancellation of cyanazine registrations. EPA is concluding the Special Review because the registrants have agreed to voluntarily modify the terms and conditions of the cyanazine registrations so that use of the pesticide will not cause unreasonable adverse effects on the environment. The registrants have agreed to voluntarily amend their registrations and phase out cyanazine use by gradually reducing application rates, implementing additional protective use restrictions during the phaseout, and voluntarily cancelling cyanazine registrations effective December 31, 1999. EPA is accepting these voluntary cancellations of technical and end use pesticide products containing cyanazine pursuant to agreements by the registrants.

FOR FURTHER INFORMATION CONTACT: By mail: Joseph E. Bailey, Review Manager, Special Review and Reregistration Division (7508W), Office of Pesticide Programs, Environmental Protection Agency, 401 M St., S.W., Washington, DC 20460. Office location, telephone number, and e-mail address: Special Review Branch, 3rd Floor, Crystal Station, 2800 Jefferson Davis Highway, Arlington, VA 22202, Telephone: 703-308-8173, e-mail: bailey.joseph@epamail.epa.gov. For a copy of documents in the public docket, to request information concerning the Special Review, or to request indices to the Special Review public docket, contact the Public Response and Program Resources Branch, Field Operations Division (7506C), Office of Pesticide Programs, Environmental Protection Agency, 401 M St., SW., Washington, DC 20460, Telephone: 703-305-5805.

SUPPLEMENTARY INFORMATION:

I. Introduction

A. Regulatory Background

This Notice of Final Determination concludes the Special Review of cyanazine which began in November 1994 when EPA issued the Notice of Initiation of Special Review of atrazine, simazine, and cyanazine (58 FR 60412, November 23, 1994) (FRL-4919-5). The Agency initiated the Special Review based upon concerns that cyanazine may pose a risk of inducing cancer in humans from dietary, occupational, and residential exposure.

When EPA initiated this Special Review, E.I. duPont de Nemours and Company (''DuPont'') and Ciba Geigy Corporation (''Ciba'') were the only registrants of cyanazine products. On August 2, 1995, DuPont voluntarily proposed to amend its cyanazine registrations to incrementally reduce cyanazine maximum application rates in 1997, 1998, and 1999, and to terminate the production of cyanazine for use in the United States by the end of 1999. DuPont proposed that after December 31, 1999, the registrant would not release for shipment any cyanazine formulated end use products for use in the United States. EPA would authorize distribution and sale through September 30, 2002, of any existing stocks of cyanazine formulated end use products that were released for shipment on or before December 31, 1999. It also would authorize use of these products in accordance with the product labels through December 31, 2002. DuPont would modify the labels of cyanazine formulated end use products released for shipment by the registrant after July 25, 1996, to specify the maximum application rates during the phaseout and to inform the public of the existing stocks provisions. It also would modify cyanazine labels to require use of application equipment with enclosed cabs for applicators beginning in 1998. Cyanazine technical products released for shipment by DuPont after July 25, 1996, would bear labels subjecting any end use products made from those technical products to the terms and conditions described in this paragraph. Finally, DuPont requested that EPA accept the voluntary cancellation of all registered DuPont cyanazine products effective on December 31, 1999. DuPont also waived any right to challenge EPA's final action on the Special Review or the terms and conditions upon EPA's final acceptance of the proposed amendments. On August 2, 1995, EPA accepted DuPont's proposal to amend the cyanazine registrations.

On November 8, 1995, EPA announced receipt of a request from Ciba to voluntarily cancel its only product containing cyanazine (60 FR 56333) (4984-1). The cancellation order for Ciba's sole product containing cyanazine was effective February 6, 1996.

After EPA initiated Special Review, Griffin Corporation (''Griffin'') filed an application to register certain cyanazine pesticide products and subsequently agreed to the same terms and conditions of registration that were proposed by DuPont. EPA granted Griffin's applications and issued conditional registrations subject to those same terms and conditions.

On March 1, 1996, EPA issued a Notice of Preliminary Determination to Terminate Special Review and a Notice of Receipt of Requests for Voluntary Cancellation of cyanazine registrations (61 FR 8186) (5352-6). In this Notice, EPA explained that it was proposing to terminate the Special Review of cyanazine because, based upon the modified terms and conditions of the cyanazine registrations, the use of cyanazine will not cause any unreasonable adverse effects on the environment. The complete terms and conditions to amend cyanazine registrations that were agreed to by the registrants were provided in the Notice.

In the same Notice, EPA announced receipt of requests from DuPont and Griffin to voluntarily cancel their registrations pursuant to section 6(f) of the Federal Insecticide, Fungicide, and Rodenticide Act (FIFRA) (7 U.S.C. section 136d(f)). The requested voluntary cancellations would take effect on December 31, 1999.

The cyanazine product registrations that are subject to the modified terms and conditions of registrations as agreed to by DuPont and Griffin, including voluntary cancellation effective on December 31, 1999, are listed below by registration number and product name.

Registration No.	Product Name
352-470	DuPont Bladex (R)4L Herbicide
352-475	DuPont Cyanazine Technical
352-495	DuPont Bladex (R)90 DF Herbicide
352-500	DuPont Extrazine (R)II 4L Herbicide
352-577	DuPont Extrazine (R)II DF Herbicide
1812-364	Griffin Cyanazine Technical

Registration No.	Product Name
1812-365	Griffin Cynex DF
1812-366	Griffin Cynex 4L Herbicide Liquid
1812-367	Griffin Cynex Extra 4L
1812-368	Griffin Cynex Extra DF

B. Legal Background

1. *Summary of Special Review Process.* Special Review is a decision-making process designed to help EPA determine whether the Agency should initiate formal procedures, such as involuntary cancellation or suspension of a pesticide registration or the imposition of modified terms and conditions of registration because use of the pesticide may cause unreasonable adverse effects on the environment (40 CFR 154.1(a)).

EPA announces its decision to initiate the process by publishing a Notice of Special Review. EPA may initiate a Special Review if a pesticide use under the existing terms and conditions of registration meets or exceeds the risk criteria specified in the regulations at 40 CFR 154.7. In the initial Notice, EPA solicits comments concerning the risks and benefits of the uses that are subject to Special Review (40 CFR 154.25).

In response to the Notice of Special Review, the public may submit comments pertinent to whether the use of a pesticide product as currently registered meets or exceeds the risk criteria as currently registered; whether any additional restrictions on the use of the product, in accordance with a pending application or amendment, would cause it to meet or exceed the risk criteria; whether the risks caused by use of the product are unreasonable; and what regulatory action EPA should take (40 CFR 154.26).

The regulations governing Special Review contemplate that EPA may terminate the process if the pesticides' registrants are willing and able to voluntarily eliminate any unreasonable adverse effects without formal proceedings by voluntarily modifying the terms and conditions of registration or voluntarily cancelling registrations. Section 154.1(a) of the regulations states that the issuance of a Notice of Special Review means that the Agency expects to initiate a formal proceeding unless ''the Agency's initial determination was erroneous, . . . the risks can be reduced to acceptable levels without the need for formal proceedings, or . . . the benefits of the pesticide's use outweigh the risks.''

If EPA determines that the risks can be reduced to acceptable levels because the registrants are able and willing to modify the terms and conditions of registration, then it will issue a Notice of Preliminary Decision to Terminate Special Review. This Notice explains EPA's basis for concluding that the measures agreed to by the registrants will reduce risks to an acceptable level and responds to significant comments received in response to the initial Notice of Special Review. It also solicits public comments on EPA's position to terminate Special Review and its proposed resolution of risk concerns (59 FR 12188; March 27, 1985).

One of the risk reduction measures that a registrant may agree to is a voluntary cancellation under FIFRA section 6(f). This provision authorizes EPA to cancel a registration based upon the request of the registrant without regard for whether the pesticide poses an unreasonable risk of adverse effects. Other possible risk reduction measures that a registrant may agree to are modifications of the use of the pesticide that will reduce risk to an acceptable level, such as requiring the use of respirators or reducing the amount of pesticide that may be used. Registrants generally agree to incorporate such voluntary risk reduction measures into the terms and conditions of their registration to insure future compliance.

Sometimes registrants are unable or unwilling to voluntarily amend the existing terms and conditions of registration so that the products in question do not cause unreasonable adverse effects. If this occurs, the regulations contemplate that the Agency will issue a Notice of Preliminary Determination to Terminate Special Review and, among other things, will describe the regulatory measures that the Agency intends to initiate following termination of the process (40 CFR 154.31).

After the close of the comment period for a Notice of Preliminary Determination, EPA issues a Notice of Final Determination. This Notice includes the Agency's final determination and a discussion of the reasons for that determination, any comments submitted by the Secretary of Agriculture or the Scientific Advisory Panel, any significant public comments submitted in response to the Notice of Preliminary Determination, and instructions to registrants, applicants for registration, and other interested persons with respect to procedures that will be used to implement the final determination (40 CFR 154.33).

Following termination of Special Review, the Agency may either return the pesticide to the regular registration process or initiate formal proceedings. These formal proceedings include cancellation under FIFRA section 6(b), suspension under FIFRA section 6(c), denial of a registration application under FIFRA section 3(c)(6), or change of classification under FIFRA section 3(d)(2). A more detailed description of the Special Review Process may be found at 40 CFR part 154 and 61 FR 8187-8.

2. *Voluntary Cancellation Process.* FIFRA section 6(f)(1)(D) authorizes the Administrator to approve or deny a request for voluntary cancellation (7 U.S.C. section 136d(f)(10(D)). Unlike an involuntary cancellation under FIFRA section 6(b), FIFRA does not require the Administrator to make a finding that use of the pesticide may generally cause unreasonable adverse effects on the environment to approve a voluntary cancellation request. If a registrant wishes to voluntarily cancel its registration, it may do so at any time under section 6(f), by submitting a request to EPA (7 U.S.C. section 136d(f)(1)(A)). The statute also contains provisions governing the publication of a notice of such a request which ensures that users and others will have adequate notice of the voluntary cancellation and time to submit their own applications to assume the registrations (7 U.S.C. section 136d(f)(1)). FIFRA does not require EPA to conduct a hearing on whether a voluntary cancellation request should be granted.

II. Summary of Notice of Preliminary Determination

In the Preliminary Determination, EPA reviewed the risks and benefits of phasing out and eventually cancelling cyanazine registrations pursuant to the terms and conditions of registration agreed to by DuPont and Griffin. It concluded that the phaseout and cancellation will eventually reduce risk to zero when the product may no longer be used. Prior to cancellation, EPA noted that progressive restrictions on the maximum amount of cyanazine that may be applied per acre, combined with closed cab requirements and depletion of existing stocks will progressively reduce risk (61 FR at 8200).

EPA also discussed the benefits of cyanazine use under the terms and conditions of the phaseout and cancellation. It determined that the gradual phaseout will lessen the economic impact to growers who have used cyanazine when compared to an immediate cancellation. The phaseout should allow growers sufficient time to find suitable alternative weed control strategies to replace cyanazine, causing

little disruption to agricultural production. The phaseout also makes it unnecessary to recall and dispose of unused product because it provides advance notice of the ultimate cancellation and prohibition of use to distributors and growers.

Based upon the assessment of risks and benefits in light of the terms and conditions agreed to by DuPont and Griffin, EPA concluded that the use of cyanazine during the phaseout would not pose any unreasonable adverse effects.

III. Response to Public Comments

A. Analysis Required by Special Review Regulations

Griffin, citing 40 CFR 154.1(a), asserts that after EPA initiates Special Review it is prohibited from taking further steps to ''cancel or alter a product registration if the record establishes that 'the Agency's initial determination was erroneous . . . or that the benefits of the pesticide's use outweigh the risks.'''

The Agency disagrees with Griffin's characterization of this Special Review regulation. The regulation, cited in part by the commenter, reads:

> The purpose of the Special Review process is to help the Agency determine whether to initiate procedures to cancel, deny, or reclassify registration of a pesticide product because uses of that product may cause unreasonable adverse effects on the environment in accordance with section 3(c)(6) and 6 of [FIFRA]. The process is intended to ensure that the Agency assesses risks that may be posed by pesticides and the benefits of use of those pesticides in an open and responsive manner. The issuance of a Notice of Special Review means that the Agency has determined that one or more uses of a pesticide may pose significant risks and that, following completion of the Special Review process, the Agency expects to initiate formal proceedings seeking to cancel, deny, reclassify, or require modifications to the registration of the product(s) in question unless it has been shown during the Special Review that the Agency's initial determination was erroneous, that the risks can be reduced to acceptable levels without the need for formal proceedings, or that the benefits of the pesticide's use outweigh the risks (40 CFR 154.1(a)).

This provision describes the actions that EPA believes may be necessary after termination of Special Review depending upon the circumstances. It does not establish mandatory procedures that restrict the Agency's options once Special Review is initiated as the commenter seems to suggest. Rather it describes possible steps that the Agency may consider taking after it terminates Special Review.

The regulation describes the steps that EPA expects to initiate after termination of Special Review as ''formal proceedings'' to ''cancel, deny, reclassify, or require modifications'' to product registrations. The regulation contemplates that ''formal proceedings'' likely would not be appropriate if the Agency determines that one of the following occurs: (1) The decision to initiate Special Review is erroneous, (2) the risks cannot be reduced to acceptable levels without a formal proceeding, or (3) the benefits outweigh the risks. Based upon this language, it is clear that the term ''formal proceedings'' means involuntary, EPA-initiated proceedings such as the issuance of a Notice of Intent to Cancel under FIFRA section 6(b) or the required modification of the terms and conditions of a registration and does not include other measures that the registrants agree to such as voluntary cancellations under FIFRA section 6(f) or voluntary modifications to product registrations. If any one of the three circumstances specified in the rule exists, then formal involuntary proceeding would be unnecessary because the risk/benefit balance would not justify such an action.

Griffin's assertion that the regulation prohibits EPA from taking steps to cancel or alter a registration if the Agency's initial risk determination is erroneous or if the benefits outweigh the risks would produce an absurd result. Both the statute and the regulations contemplate that registrants may address unreasonable risks by amending their registrations to reduce risk or even by requesting voluntary cancellation of their registrations. Griffin's interpretation would effectively prevent EPA from accepting such risk reduction measures once it has initiated Special Review and force it to initiate unnecessary measures such as a FIFRA section 6(b) cancellation. Such an interpretation of 154.1(a) is inconsistent with the meaning of the regulation and with congressional intent underlying FIFRA's voluntary cancellation provision.

EPA has determined that the risks posed by cyanazine can be reduced to acceptable levels without formal proceedings because of the voluntary cancellation and phaseout agreed to by both DuPont and Griffin. As a result, it does not need to initiate formal cancellation or other involuntary proceedings upon completion of the Special Review. Instead, EPA will return the cyanazine registrations to the regular registration process.

B. Applicability of Rulemaking Provisions of the Administrative Procedure Act (APA)

Griffin claims that the Special Review process constitutes rulemaking under the APA and that EPA must comply with the APA's notice and comment requirements when it conducts a Special Review. It also alleges that EPA violated APA rulemaking requirements in a number of instances by failing to provide background information that was not cited in any Special Review Notice and by failing to respond to comments on various aspects of the Agency's risk assessment and on alternative methods of addressing risks posed by cyanazine usage.

EPA has always taken the position that Special Review does not constitute APA rulemaking but instead is an informal information gathering mechanism for assessing whether the use of specific pesticides causes unreasonable adverse effects on the environment based upon the terms and conditions of registration. As noted in the regulations, Special Review is designed to help EPA decide whether to initiate a formal proceeding to cancel or reclassify an existing registration or deny an application for a registration (40 CFR 154.1(a)).

The APA imposes notice-and-comment requirements only upon ''legislative'' rules. *See generally Community Nutrition Institute* v. *Young*, 818 F.2d 943 (D.C. Cir. 1987). Legislative rules generally ''create law,'' *Gibson Wine Co.* v. *Synder*, 194 F.2d 329, 331 (D.C. Cir. 1952) and ''grant rights, impose obligations, or produce other significant effects on private interests.'' *Batterton* v. *Marshall*, 648 F.2d 694, 701-02 (D.C. Cir.1980); see also *American Hospital Ass'n* v. *Bowen*, 834 F.2d 1037, 1045 (D.C. Cir. 1987). Courts also give some deference to an agency's characterization of its statement although that characterization is not determinative. *Community Nutrition*, 818 F.2d at 946.

Based upon these standards, it is clear that the Special Review process is not legislative rulemaking. Termination of Special Review does not itself grant a new right or create a new legal obligation. Following the termination of Special Review, EPA may affect private rights but only by taking further steps to initiate an involuntary adjudicative process or by implementing voluntary risk reduction measures. Accordingly, the Special Review process does not create a new law and thus, is not a legislative rule requiring notice and comment.

The Ninth Circuit rejected an argument similar to that proposed by Griffin in a challenge to EPA's consideration of permit applications for storm water discharges under the Clean Water Act. *Natural Resources Defense Council, Inc.* v. *EPA*, 966 F.2d 1292, 1309 (9th Cir. 1992). NRDC argued that EPA's decision to approve or disapprove a group application was a rule of ''general applicability'' and thus subject to APA's notice and comment requirements. *Id*. The court rejected this argument. It first observed that ''rulemaking ordinarily involves 'broad judgments, legislative in nature rather than the resolution of a particular dispute of facts.''' *Id*. (citation omitted). The court held that EPA's decision on the permit application was ''essentially a factual determination,'' not rulemaking, because it focused on a specific factual question regarding whether the application adequately identified a second group that would be subject to more extensive data requirements. *Id*. The court also explicitly noted that EPA was not engaged in rulemaking even though the decision on the permit applications might affect a large number of applicants.

The principal case that Griffin relies upon, *Waste Management, Inc.* v. *EPA*, 669 F. Supp. 536 (D.D.C. 1987), does not support the conclusion that Special Review constitutes rulemaking. In *Waste Management*, EPA was engaged in issuing a regulation governing ocean incineration. EPA decided to temporarily freeze all applications for ocean incineration permits until the final regulation was promulgated but it did not make any specific factual determinations regarding specific permit applications. The court held that this temporary freeze constituted APA rulemaking.

In contrast to the circumstances in *Waste Management*, EPA is utilizing the cyanazine Special Review to analyze the risks and benefits of cyanazine under the terms and conditions of registration. This analysis is preparatory either to initiating proceedings to address any unreasonable risk or implementing voluntary risk reduction measures and does not itself impose any limitations upon existing registrations. See, 40 CFR 154.1(a). Such preliminary factual determinations are not rulemaking under the APA.

C. Risk/Benefit Comments Beyond Scope of Agency Determination

1. *Scope of Agency determination*. A number of comments address matters beyond those at issue in the Agency's Final Determination. The regulations governing Special Review do not require the Agency to consider such immaterial comments.

As EPA stated in the Notice of Preliminary Determination, the issue is whether the modified terms and conditions agreed to by the registrants ''will eliminate any unreasonable adverse effects posed by cyanazine registrations'' (61 FR at 8200). Where the registrants agree to modify the terms and conditions of registration, the controlling issue is whether the use of cyanazine pursuant to the modifications poses any unreasonable adverse effects. If EPA determines that use pursuant to the modified registrations continues to cause unreasonable adverse effects despite the modifications, then it terminates Special Review and initiates other involuntary mechanisms to address the risk. On the other hand, if EPA determines that the use pursuant to the modified registrations eliminates any unreasonable adverse effects, then additional involuntary proceedings are unnecessary and the Agency would terminate Special Review and return the registrations to the registration process.

The regulations specifically require EPA to respond in the Notice of Final Determination to ''significant public comments submitted on the Notice of Preliminary Determination'' (40 CFR 154.33(a)(3)). Significant comments concern a matter that is at issue in the proceeding or that is probative of a matter at issue; in other words, those that raise matters material to EPA's Preliminary Determination. At this point, the only issue is whether the modified terms and conditions agreed to by the registrants will eliminate any unreasonable adverse effects caused by the use of the products and the Agency will respond only to comments that address that issue.

This interpretation of § 154.33(a)(3), which governs responses to significant comments, is consistent with other Special Review regulations. As discussed in Unit III.A. of this document, the regulations contemplate that EPA will likely terminate Special Review and not impose any involuntary actions upon a pesticide registration if the registrant agrees to modify the terms and conditions of registration to reduce risk to an acceptable level.

Some of the comments indicate a fundamental misunderstanding of the nature of Special Review. EPA review focuses on the risks and benefits of a pesticide that result from the use of the pesticide under the terms and conditions of the existing registrations. At this point, the registrants have agreed to amend the terms and conditions that control the use of the pesticide and EPA has accepted those amendments. Terms and conditions of registration that governed the use of cyanazine before EPA accepted the amendments no longer exist and therefore have no effect upon the risks and benefits associated with the use of cyanazine. Similarly, hypothetical alternative terms and conditions of registration suggested by commenters do not address the issue of the risks and benefits associated with the use of cyanazine under the modified terms and conditions agreed to by the registrants. Thus comments pertaining to previous terms and conditions of registration or to hypothetical alternative arrangements, and the risks or benefits associated with such terms and conditions, are immaterial to the Agency's decision to terminate the cyanazine Special Review.

2. *Specific comments*. Some commenters focus on issues that EPA raised in the initial Notice of Special Review and that concern the risks or benefits of cyanazine usage under the old terms and conditions of registrations that existed at the time Special Review was initiated. These issues do not address whether cyanazine usage poses any unreasonable adverse effects under the new terms and conditions agreed to by the registrants in 1995. For example, Griffin comments that EPA erroneously decided to initiate Special Review based upon a flawed risk assessment and provides a lengthy critique of that initial risk assessment. While such comments were material to the Agency's initial Notice of Special Review, they do not concern the issue now before the Agency - whether cyanazine poses any unreasonable adverse effects under the new terms and conditions of registration.

Griffin and other commenters claim that the benefits of cyanazine use may be higher than EPA first estimated in the Notice of Special Review, asserting that the Agency did not calculate the relative costs of cyanazine and alternative pesticides correctly and did not recognize that cyanazine is ''significantly superior'' to alternatives. These claims are immaterial to the Agency's decision to terminate Special Review. EPA has decided to terminate the process because the benefits of continued use under the new terms and conditions of registration outweigh the risks. At this point it is inconsequential whether the benefits outweigh the risks by a greater margin than EPA earlier calculated because greater benefits would only provide more support for the decision to terminate Special Review without initiating formal proceedings.

Some additional commenters discuss alternative terms and conditions of registrations that might yield an acceptable risk/benefit balance. At this point, however, such alternatives are immaterial because the agreed upon modifications already insure that cyanazine usage does not pose any unreasonable adverse effects. Given the registrants' agreement to these modifications, it is unnecessary for EPA to address these issues.

The comments directed towards the old terms and conditions of cyanazine registration appear to be directed at the decision of the registrants to voluntarily amend their cyanazine registrations rather than the Agency's decision to terminate Special Review. The termination of Special Review will not prevent interested persons from applying for registrations with terms and conditions different from those currently in effect. Such an application may be filed at any time, even after the current registrations are cancelled. If the application otherwise fulfills the prerequisites for registration, the Agency would consider the risks and benefits of use under the proposed terms and conditions and pursuant to FIFRA and the regulation including 40 CFR 154.35. An applicant may contest the decision to deny an application as specified in FIFRA section 3(c)(6).

D. Response to Material Risk/Benefit Comments

Griffin also addresses the economic impact of the phaseout and voluntary cancellations and concludes that ''EPA's conclusions concerning the economic impact of the phase-out and registration cancellations likely are correct.'' In reaching this conclusion, the commenter relied in part upon the data that EPA used to determine cyanazine application rates as summarized in Table 5 of the Preliminary Determination. It also utilized additional application rate data that it obtained independently.

Based upon the information underlying Table 5, EPA agrees that its conclusions with respect to the economic impact of the modified terms and conditions of registration are correct. The Agency has not analyzed the additional data utilized by Griffin because the comment states that it supports rather than contradicts the Agency's preliminary economic determination.

E. Secretary of Agriculture and Scientific Advisory Panel

The Special Review regulations require the Agency to respond to any comments submitted by the Secretary of Agriculture or the Scientific Advisory Panel (40 CFR 154.33(a)(2)) but neither submitted comments. The regulations require EPA to refer proposals to initiate involuntary proceedings such as a FIFRA section 6(b) cancellation to those bodies. The regulations, however, do not impose such a requirement where, as here, the registrants have accepted voluntary modifications of the terms and conditions of their registrations followed by voluntary cancellations.

IV. Decision Regarding Special Review

EPA has decided to terminate the cyanazine Special Review. This decision is based upon EPA's determination that the use of cyanazine on cotton, field and sweet corn, and sorghum in accordance with the voluntary cancellation and phaseout agreed to by the cyanazine registrants does not cause any unreasonable adverse effects.

The new terms and conditions of registration will gradually lower and then eliminate the risks caused by cyanazine. Maximum application rates will be reduced in 1997, 1998, and 1999, and applicators will be required to use closed cab equipment beginning in 1998. Risks will eventually be reduced to zero when the use prohibition takes effect in 2002. The requirement that cyanazine applicators use closed cabs to apply the pesticide beginning in 1998 also will reduce occupational exposure to the substance. While there will be some exposure to cyanazine during the phaseout, exposure and thus, risks will decline as application rates drop and existing stocks are depleted.

The phaseout of cyanazine will lessen the economic impact to growers who have used cyanazine to control weeds. The phaseout should allow growers sufficient time to replace cyanazine with alternative weed control practices so that there will be little disruption to agricultural production. Another likely benefit of the incremental phaseout is depletion of existing stocks of cyanazine so there will be little unused product to recall and dispose of after the cancellations take effect. Furthermore, the costs, time and uncertainties associated with an involuntary cancellation proceeding are avoided.

For all these reasons, EPA has decided that the implementation of the terms and conditions of the cyanazine voluntary cancellation and phaseout will prevent any unreasonable adverse effects which might otherwise be caused by the use of cyanazine on corn, cotton, and sorghum.

V. Decision Regarding Voluntary Cancellation and Use of Existing Stocks

A. Voluntary Cancellation/Cancellation Order

EPA accepts the voluntary cancellation of all cyanazine products as requested by the cyanazine registrants in accordance with FIFRA section 6(f). Both of the cyanazine registrants, DuPont and Griffin, have requested voluntary cancellations as terms and conditions of their registrations. EPA has not received any applications to assume the existing registrations of cyanazine under the new terms and conditions of registration. Consequently, EPA accepts the voluntary cancellations effective December 31, 1999 and orders the cancellations to take effect on January 1, 2000. Those products for which EPA accepts the voluntary cancellation are listed by product registration number and product name in Unit I.A. of this Notice. When the voluntary cancellations take effect on December 31, 1999, the Agency will issue an order confirming the cancellations.

B. Existing Stocks

For any cyanazine formulated end use products that are released for shipment by a registrant on or before December 31, 1999, EPA authorizes the continued sale and distribution of such products in the channels of trade in accordance with their labels through September 30, 2002. EPA authorizes the continued use of such existing stocks in accordance with their labels through December 31, 2002. EPA prohibits the use of cyanazine products after December 31, 2002. EPA is not establishing any existing stocks provisions for technical cyanazine products (DuPont Registration Number 352-475 and Griffin Registration Number 1812-364); however, any technical or formulated end use cyanazine product may be exported pursuant to FIFRA sections 3 and 17.

VI. Availability of Public Docket

EPA established a public docket, OPP-30000/60, for the cyanazine Special Review. This public docket includes this Notice and any other Notices associated with the cyanazine Special Review and EPA's decision to terminate the cyanazine Special Review. This docket also contains documents not considered Confidential Business Information that are pertinent to the cyanazine Special Review and copies of written comments or other material submitted to EPA by any person outside the government in response to the cyanazine Special Review. The docket is available for inspection from 8 a.m. to

4:30 p.m., Monday through Friday, excluding legal holidays. The public docket is located in Rm. 1132 of the Public Response and Program Resources Branch, Field Operations Division (7506C), Office of Pesticide Programs, Environmental Protection Agency, Crystal Mall #2, 1921 Jefferson Davis Highway, Arlington, VA 22202.

List of Subjects

Environmental protection.

Dated: July 17, 1996.

Lynn R. Goldman,

Assistant Administrator for Prevention, Pollution and Toxic Substances.

[FR Doc. 96–18921 Filed 7–24–96; 8:45 am]

BILLING CODE 6560–50–F

federal register

Thursday
July 25, 1996

Part V

Environmental Protection Agency

40 CFR Part 51

Inspection/Maintenance Flexibility Amendments (Ozone Transport Region); Final Rule

ENVIRONMENTAL PROTECTION AGENCY

40 CFR Part 51

[FRL–5541–3]

RIN 2060–AG11

Inspection/Maintenance Flexibility Amendments (Ozone Transport Region)

AGENCY: Environmental Protection Agency.

ACTION: Supplemental final rule.

SUMMARY: Today's action revises the motor vehicle Inspection/Maintenance (I/M) requirements by adding a special low enhanced performance standard for qualified areas in Ozone Transport Regions (OTR). This additional performance standard applies to certain attainment, marginal and moderate areas in the OTR. The purpose of this action is to allow OTR qualifying areas the flexibility to implement a broader range of I/M programs than is currently permitted.

EFFECTIVE DATE: This rule will take effect on September 23, 1996.

ADDRESSES: Materials relevant to this rulemaking are contained in the Public Docket No. A–95–08. The docket is located at the Air Docket, Room M–1500 (6102), Waterside Mall SW, Washington, DC 20460. The docket may be inspected between 8:30 a.m. and 12 noon and between 1:30 p.m. until 5:30 p.m. on weekdays. A reasonable fee may be charged for copying docket material. Electronic copies of the preamble and the regulatory text of this rulemaking are available on the Office of Air Quality Planning and Standards (OAQPS) Technology Transfer Network Bulletin Board System (TTN BBS) and the Office of Mobile Sources' World Wide Web cite, http://www.epa.gov/OMSWWW/.

FOR FURTHER INFORMATION CONTACT: Leila Cook, Office of Mobile Sources, National Vehicle and Fuel Emissions Laboratory, 2565 Plymouth Road, Ann Arbor, Michigan, 48105. Telephone (313) 741–7820.

SUPPLEMENTARY INFORMATION:

I. Table of Contents
II. Summary of Rule
III. Authority
IV. Public Participation
A. Increased Flexibility
B. Clarification of 200,000 Population Requirement
C. Duplicate Requirements
D. Emission Reduction Credits
E. Comparability of Basic Programs
F. Effectiveness of RSD
G. Retests for RSD Failures
H. OBD Tests
I. Other Comments
V. Economic Costs and Benefits
VI. Administrative Requirements
A. Administrative Designation
B. Reporting and Recordkeeping Requirement
C. Regulatory Flexibility Act
D. Unfunded Mandates Act
E. Small Business Regulatory Enforcement Fairness Act

II. Summary of Rule

Under the Clean Air Act as amended in 1990 (the Act), 42 U.S.C.7 401 *et seq.*, the U.S. Environmental Protection Agency (EPA) published in the Federal Register on November 5, 1992 (40 CFR part 51, subpart S) rules related to plans for Motor Vehicle Inspection and Maintenance (I/M) programs (hereafter referred to as the I/M rule; see 57 FR 52950). Today, EPA is revising this rule to provide greater flexibility to certain Ozone Transport Region (OTR) areas.

Section 182 of the Act is prescriptive regarding the various elements that are required as part of an enhanced Inspection/Maintenance (I/M) performance standard. It also provides states with flexibility in meeting the numerical performance standards for enhanced or basic I/M programs. States in the Ozone Transport Region (OTR) requested additional flexibility in implementing I/M in areas which are in attainment, which are areas designated and classified as marginal ozone areas, or which are designated and classified as moderate ozone areas under 200,000 in population. These three types of areas would be exempt from all I/M requirements but for their location in the OTR. These areas are included in the OTR enhanced I/M requirements to help achieve overall attainment and maintenance goals for the region, which includes serious and severe ozone nonattainment areas.

With today's action, EPA is establishing an additional enhanced I/M performance standard for qualified areas in the Northeast OTR, hereafter referred to as the OTR low enhanced performance standard. The emission reduction targets for this program are less than both the low enhanced performance standard and the basic performance standard. There are two qualifications to be eligible for the OTR low enhanced performance standard. First, the standard applies only in attainment areas, marginal ozone nonattainment areas and certain moderate ozone nonattainment areas under 200,000 in an OTR. Moderate areas of that size that were not previously required to, or had not in fact, implemented a basic I/M program under the pre-1990 Act can take advantage of the OTR low enhanced performance standard. The savings clause in section 182(a)(2)(B)(i) requires areas that had or were required to have I/M programs before 1990 to retain programs of at least that stringency. Because, as explained below, EPA believes the Act requires an enhanced I/M program to be an enhancement over otherwise applicable I/M requirements, areas subject to basic I/M or the savings clause cannot adopt a less stringent program. Any moderate area with urbanized areas having a total population of over 200,000 would also be required to implement basic I/M under section 182(b)(4) and therefore is ineligible for the OTR low enhanced performance standard. Second, the OTR low enhanced program must be supplemented by other measures in order to achieve emission reductions equal to or greater than that which would have occurred had a regular low enhanced I/M program been implemented (as defined by 40 CFR 51.351(g), see 60 FR 48029). This is because the primary goal of the Act in establishing the OTR provisions and requiring enhanced I/M in areas with a population of 100,000 or more in the OTR was to contribute to regional attainment. EPA believes that an area should be able to qualify for the additional flexibility provided under the OTR low enhanced standard only if it achieves, in some other way, the additional reductions that the otherwise applicable low enhanced I/M program would achieve. Thus, the total emission reductions from the OTR low enhanced I/M program plus the additional measures must equal the tonnage reduction that a regular low enhanced program would have generated. However, since local reductions are not the crucial factor, a state may bubble surplus reductions from other areas not required to implement I/M in the state. For example, a state could implement a statewide reformulated gasoline (RFG) program plus an OTR low enhanced I/M program in subject areas or statewide and potentially achieve comparable reductions to a regular low enhanced program because of the additional reductions RFG would achieve in areas not otherwise required to have RFG. Equality of emission reductions must be demonstrated over a time period which aligns with the attainment deadlines of all OTR areas: from 2000 through 2007. Note that an I/M program that meets the OTR low enhanced performance standard must be implemented even if other measures could achieve comparable emission reductions because the Act specifically

requires an enhanced I/M program in metropolitan areas with 100,000 population in the OTR. Also, measures to fill the gap between OTR low and regular low enhanced I/M may not be otherwise required by the Clean Air Act.

The OTR low enhanced performance standard model program is composed of the following elements: Annual testing of 1968 and newer light duty vehicles and light duty trucks, OBD checks for 1996 and newer vehicles, remote sensing of 1968–1995 vehicles, catalyst checks on 1975 and newer vehicles, and PCV valve checks on pre-1975 vehicles. These elements collectively satisfy the Act's requirements for an enhanced I/M program performance standard. As with other performance standards, EPA does not necessarily recommend implementing this particular program but rather encourages states to design a program that will achieve equal or greater emission reductions than the performance standard while providing for the specific needs of the area.

In the proposal, EPA noted that the emission reduction targets generated by this model program could not yet be precisely modeled but EPA estimated the targets to be less than those for the basic I/M program standard (which are approximately 6.3% for HC, 10.8% for CO, and 0.7% for NO_X). EPA expects to issue draft guidance on remote sensing credits in the Summer of 1996. As soon as a final guidance is issued, an analysis of the emission reduction targets generated by this model program will be placed in the docket. Even though the estimated emission reduction targets for the OTR low enhanced standard are less than those for basic I/M, EPA believes this standard meets the requirement of the Act for ''enhanced'' I/M. There are two important facts to consider in this regard: first, neither the Act nor the legislative history specifies that the emission reduction targets for enhanced I/M must be greater than basic in all cases. EPA believes the Act provides the agency latitude in establishing multiple performance standards to meet a wide range of state and local needs and conditions. Second, the areas eligible to take advantage of this performance standard were not required to nor did they implement I/M programs prior to 1990. So, in all cases, this standard establishes a program target that is indeed enhanced relative to what was present or required for the area before enactment of the 1990 Clean Air Act Amendments or is otherwise required after the 1990 Clean Air Act Amendments. EPA did not receive any public comments disagreeing with this legal interpretation.

As is the case with all performance standard model programs, EPA does not necessarily recommend implementation of the model program, since it is constrained in composition by law (e.g., EPA recommends not testing cars until they reach 4 years of age and recommends biennial testing as more cost-effective; by contrast, all of the enhanced I/M performance standards are required by the Act to reflect a model program that includes annual testing of all vehicles). In that the emission reduction targets for the OTR low enhanced performance standard are below the basic level, the standard provides the broadest possible latitude in program design. For example, some states in the OTR have existing decentralized, safety inspection programs. Comprehensive visual checks of emission control devices, a gas cap pressure test, the Act-mandated OBD check, and the Act-mandated on-road testing could be added to these programs which should then meet the OTR low enhanced standard, as long as a proper enforcement mechanism was in place. Many other possibilities exist for program designs that could also meet this performance standard.

While the OTR low enhanced performance standard is less demanding than the existing performance standard applicable to the affected areas, today's action still ensures that enhanced I/M programs in these areas meet all statutory criteria for EPA approval. A state's OTR low enhanced program is required, under section 182(c)(3)(C) of the Clean Air Act, to include computerized analyzers and on-road testing devices; computerized equipment and on-road testing devices are required by the current rule and apply to the OTR low enhanced program. A state's OTR low enhanced program shall also include a regulatory framework for waivers, if waivers are to be issued, and an enforcement system through registration denial, (except for any program in operation before November 15, 1990 whose enforcement mechanism has been demonstrated to be more effective than registration denial). Today's amendments leave requirements in this regard the same as for other enhanced I/M areas. As mandated by the Act, in an OTR low enhanced program, vehicle emissions shall be tested annually unless biennial testing will equal or exceed the reductions that can be obtained from annual inspections. A program could combine biennial inspections on the vehicles equipped with on-board diagnostic computers (OBD) with biennial evaporative system checks to achieve the necessary additional reductions. The OTR low enhanced performance standard is based on centralized inspections of OBD-equipped vehicles and on-road remote sensing testing; EPA believes that this meets the specific requirement that the performance standard be based on centralized testing.

Today's action also establishes quality assurance requirements for OTR low enhanced I/M programs that are commensurate with the emission reductions which the programs are intended to achieve. In particular, current rules require enhanced I/M programs to be evaluated by conducting test-only IM240s on a random representative sample of the fleet (a minimum of 0.1%) to verify that the emission reductions are occurring. EPA believes that the emission reductions from an OTR low enhanced program are small enough that this level of effort is not justified. The routine quality assurance requirements of the original I/M rule are also not necessarily appropriate in light of the low level of benefits of the program.

This action also modifies the geographic exclusion rule for counties within Metropolitan Statistical Areas (MSAs) in the Ozone Transport Region. The modification allows states to exclude counties that comprise less than 1% of the population of the MSA from program coverage. Inclusion of such a small fraction of the population is not worth the significant cost of expanding geographic coverage of the program to include such a county.

This action requires that the implementation date for full testing in areas opting for the OTR low performance standard be no later than the latest date by which full testing can commence and still achieve sufficient reductions for all OTR areas to meet the performance standard by the Act's attainment and reasonable further progress deadlines, including the end of 1999 attainment date for serious ozone nonattainment areas. This will generally mean a start date no later than January 1, 1999, for annual testing programs, although EPA will accept field testing commencing as late as July 1, 1999 if the full I/M reductions can be achieved by the serious area attainment deadline. Note that the performance standard model program assumes a start date of January 1, 1999 because EPA believes Congress intended that the performance standard be based on at least one complete annual test cycle. With the requirement to offset the emissions difference between OTR low and regular low enhanced with other measures, this

date ensures that attainment in the region is not impaired.

Today's action also serves to provide other flexibilities to non-OTR states in designing quality assurance programs. The intent is to allow alternative quality assurance procedures that are as effective as or better than those specified in the original I/M rule.

III. Authority

Authority for the action proposed in this notice is granted to EPA by section 182 of the Clean Air Act as amended (42 U.S.C. 7401, *et seq.*).

IV. Public Participation

A. Increased Flexibility

All the commenters agreed with EPA's effort to provide states with greater flexibility and almost all felt that the new OTR low enhanced performance standard was necessary to meet the unique needs of states within the Ozone Transport Region.

B. Clarification of 200,000 Population Requirement

1. Summary of Proposal

The proposal allowed attainment areas, marginal ozone nonattainment areas and moderate ozone nonattainment areas with a 1980 Census population of less than 200,000 in the urbanized area to use the new OTR low enhanced performance standard.

2. Summary of Comments

One commenter asked for clarification of how the 200,000 urbanized area population criteria would be applied. Specifically, the commenter asked whether the population criteria applied to urbanized areas within each Metropolitan Statistical Area (MSA) or urbanized areas within the entire attainment or non-attainment area.

3. Response to Comments

Within the OTR, enhanced I/M programs are required in MSA's with populations of 100,000 or more. However, the OTR, like the rest of the country, is also subject to the basic I/M requirements that an urbanized area with a population of 200,000 or more that is classified as moderate ozone nonattainment must implement a basic I/M program. Thus, moderate ozone areas in the OTR with an MSA population of greater than 100,000 but an urbanized area population of less than 200,000 are eligible for the OTR low enhanced performance standard. In contrast, moderate ozone areas with MSA populations of greater than 100,000 and urbanized area populations of greater than 200,000 must meet the basic performance standard. If a state within the OTR falls into this later category which has to implement a basic I/M program in the urbanized area (with a population of 200,000 or more) it can still implement an OTR low enhanced program in any portion of the MSA which falls into an urbanized area with a population of less than 200,000.

C. Duplicate Requirements

1. Summary of Proposal

The proposal did not exempt states that implement an OTR low enhanced performance program from most of the general requirements for enhanced I/M programs in the original I/M rule.

2. Summary of Comments

Two commenters addressed this issue. The first felt that the inclusion of on-road testing and OBD testing in the OTR low enhanced performance standard is duplicative of the on-road and OBD testing requirements in the original rule, 40 CFR 51.351 (b) and (c). The second commenter felt that several sections of the I/M rule dealing with data collection and data analysis and reporting, 40 CFR 51.365 and 51.366, should not be applicable to OTR low enhanced programs.

3. Response to Comments

The Clean Air Act requires OBD as part of any basic or enhanced performance standard. Additionally, RSD is required as part of any enhanced I/M performance standard. Section 51.351(b) requires that on-road testing of either 0.5% of the subject vehicle population or 20,000 vehicles (whichever is less) be included in any enhanced I/M performance standard. The OBD requirements were reserved by EPA in the original I/M rule and are expected to be published in 1996. EPA cautions commenters to remember that performance standards merely establish the minimum target a certain program must meet. They do not conclusively establish the elements of the program. Thus, the § 51.351(h)(6) establishment of RSD and OBD as the exhaust emission test types under the OTR low enhanced performance standard is not a duplication of §§ 51.351 (b) and (c) because these are separate standards which OTR low areas do not otherwise have to meet.

EPA agrees with the comment that certain portions of sections 51.365 and 51.366 regarding data collection, analysis and reporting are inapplicable to OTR low enhanced performance states. Certain ''high'' enhanced program elements, such as evaporative system checks, will not apply in an OTR low enhanced program. However, the Clean Air Act and the I/M rule require each state to report emissions reductions achieved, based on data collected during the inspection and repair of vehicles. Furthermore, depending on the program design which these areas elect to implement, varying types of data and reporting might or might not apply. Obviously a state cannot collect, analyze and report data which its program does not generate. Therefore, while the data collection and reporting requirements of sections 51.365 and 51.366 must still apply to OTR low enhanced areas, states need only submit program-applicable data and reports.

D. Emission Reduction Credits

1. Summary of Proposal

The preamble for the proposal acknowledged that EPA had not finalized emission reduction credits for the OTR low enhanced performance standard because EPA is still in the process of finalizing the credits for RSD. However, the preamble did note that EPA expected these benefits to be less than those achieved by the basic performance standard.

2. Summary of Comments

Several commenters noted that it is difficult for a state to finalize an OTR low enhanced program until EPA issues emission reduction credits for the program.

3. Response to Comments

EPA is preparing to issue a draft guidance on RSD credits in the Summer of 1996. After the draft guidance is issued, EPA will take public comments before issuing final guidance. While EPA cannot give a specific date by which final guidance will be issued, stakeholders can be assured that EPA realizes the importance of issuing RSD credits and is working to issue them as soon as possible.

E. Comparability of Basic Programs

1. In the proposal, EPA stated that the emission reductions from the new OTR low enhanced performance standard will actually be less than the emission reductions obtained from a basic I/M program. EPA noted that the Act in no way prohibits the creation of multiple enhanced performance standards to meet a wide variety of state and local needs and conditions. In fact, the Clean Air Act does not require emission reductions targets for enhanced I/M programs to be greater than those for basic programs. Furthermore, all the areas eligible to use the OTR low enhanced performance standard were

not required and did not implement I/M programs before 1990. Thus, the OTR low enhanced performance standard is an enhancement for these areas compared to what was required and present before the 1990 amendments to the Act.

2. Summary of Comments

One commenter believes that any existing basic program in an attainment or marginal non-attainment area should meet the OTR low enhanced performance standard. This commenter did not believe that existing programs should have to be supplemented to meet the new performance standard.

3. Response to Comments

From an emission reduction point of view, any existing basic program that meets the basic performance standard will also meet the emission reduction targets established by the OTR low enhanced performance standard. The only changes existing programs will have to make is to include any element which is required for an enhanced program which it currently does not include; for instance, OBD checks and 0.5% on-road testing.

F. Effectiveness of RSD

1. Summary of Rule

The performance standard created by today's action requires RSD testing of 1968 to 1995 vehicles beginning in 1999.

2. Summary of Comments

One commenter was very concerned that RSD testing will actually increase consumer inconvenience if RSD has a high false failure rate. If this is the case and the state requires retests for vehicles that fail the RSD test, many consumers may be needlessly required to go to a test station to get another emission test.

3. Response to Comments

The goal of this action is to increase flexibility to the states so that they can design an I/M program which they feel is most effective for their area and convenient for their citizens. This performance standard merely establishes the target level of emission reductions that an OTR low enhanced program must achieve and in no way mandates the type of test a state must implement. Thus, states concerned about false failures need not rely heavily on RSD testing. States may implement any type of test they choose so long as it meets the emission reduction target of the OTR low enhanced performance standard. The requirement to perform on-road testing on at least 0.5% of the fleet remains, although RSD is not required for this purpose.

G. Retests for RSD Failures

1. Summary of Proposal

The OTR low enhanced performance standard requires RSD testing of 1968–1995 vehicles with a carbon monoxide standard of 7.5%. A vehicle must have two separate readings above 7.5% to establish a failure thereby requiring a retest.

2. Summary of Comments

One commenter noted their opinion that RSD is useful at targeting vehicles with excess emissions but that RSD cannot substitute for a traditional tail-pipe exhaust test. Therefore, the commenter believed that RSD must be used in conjunction with a traditional exhaust emissions re-test.

3. Response to Comments

EPA agrees with this comment but again points out that this rule only establishes a performance standard and is not guidance or a mandate for RSD usage. EPA believes that it would be unwise for states to require emission related repairs based solely on an RSD reading. Indeed, EPA believes that states are aware of this and will perform confirmatory emission re-tests using proven methods on vehicles that fail RSD in order to avoid useless repairs.

H. OBD tests

1. Summary of Rule

Among other requirements, the OTR low enhanced performance standard requires a start date of January 1, 1999 and OBD tests on all 1996 and newer vehicles.

2. Summary of Comments

One state commented that it was reluctant to require repairs based solely on OBD test failure in 1999 because of the relative newness of OBD technology. The state commented that it preferred to wait and not require repairs based on OBD test failure until there is more data available on OBD's effectiveness at correctly identifying emission component failures.

3. Response to Comments

EPA proposed an OBD rule in the Federal Register on August 18, 1995 (60 FR 43092). Currently, EPA is finalizing the OBD rule which is expected to be published in the Summer of 1996. In the OBD rule, EPA will address the concerns of this and several other comments about the novelty of OBD and the need for a phase-in period prior to requiring repairs.

I. Other Comments

EPA received several other comments which dealt with I/M issues that were not specific to this rulemaking. EPA responded to these unrelated comments in a response document which it placed in the docket.

V. Economic Costs and Benefits

Today's revisions provide states additional flexibility that lessens rather than increases the potential burden on states. Furthermore, states are under no obligation, legal or otherwise, to modify existing plans meeting the previously applicable requirements as a result of today's action.

VI. Administrative Requirements

A. Administrative Designation

It has been determined that this amendment to the I/M rule is not a significant regulatory action under the terms of Executive Order 12866 and has been waived from OMB review. Any impacts associated with these revisions do not constitute additional burdens when compared to the existing I/M requirements published in the Federal Register on November 5, 1992 (57 FR 52950) as amended. Nor do today's amendments create an annual effect on the economy of $100 million or more or otherwise adversely affect the economy or the environment. It is not inconsistent with, nor does it interfere with, actions by other agencies. It does not alter budgetary impacts of entitlements or other programs, and it does not raise any new or unusual legal or policy issues.

B. Reporting and Recordkeeping Requirement

There are no information requirements in this supplemental final rule which require the approval of the Office of Management and Budget under the Paperwork Reduction Act, 44 U.S.C. 3501 *et seq.*

C. Regulatory Flexibility Act

Pursuant to section 605(b) of the Regulatory Flexibility Act, 5 U.S.C. 605(b), the Administrator certifies that this action will not have a significant economic impact on a substantial number of small entities and, therefore, is not subject to the requirement of a Regulatory Impact Analysis. A small entity may include a small government entity or jurisdiction. A small government jurisdiction is defined as ''governments of cities, counties, towns, townships, villages, school districts, or special districts, with a population of less than 50,000.'' This certification is based on the fact that the I/M areas

impacted by this rulemaking do not meet the definition of a small government jurisdiction, that is, ''governments of cities, counties, towns, townships, villages, school districts, or special districts, with a population of less than 50,000.'' Furthermore, the impact created by this action does not increase the pre-existing burden which this proposal seeks to amend.

D. Unfunded Mandates Act

Under Section 202 of the Unfunded Mandates Reform Act of 1995 (''Unfunded Mandates Act''), signed into law on March 22, 1995, EPA must prepare a budgetary impact statement to accompany any proposed or final rule where the estimated costs to State, local, or tribal governments, or to the private sector, will be $100 million or more. Under Section 205, EPA must select the most cost-effective and least burdensome alternative that achieves the objective of the rule and is consistent with statutory requirements. Section 203 requires EPA to establish a plan for informing and advising any small governments that may be significantly impacted by the rule.

To the extent that the rules in this action would impose any mandate at all as defined in Section 101 of the Unfunded Mandates Act upon the state, local, or tribal governments, or the private sector, as explained above, this rule is not estimated to impose costs in excess of $100 million. Therefore, EPA has not prepared a statement with respect to budgetary impacts. As noted above, this rule offers opportunities to states that would enable them to lower economic burdens from those resulting from the currently existing I/M rule.

E. Small Business Regulatory Enforcement Fairness Act

Under section 801(a)(1)(A) of the Administrative Procedures Act (APA) as amended by the Small Business Regulatory Enforcement Fairness Act of 1996, EPA submitted a report containing this rule and other required information to the U.S. Senate, the U.S. House of Representatives and the Comptroller General of the General Accounting Office prior to publication of the rule in today's Federal Register. This rule is not a ''major rule'' as defined by section 804(2) of the APA as amended.

List of Subjects in 40 CFR Part 51

Environmental protection, Administrative practice and procedure, Air pollution control, Carbon monoxide, Transportation.

Dated: July 16, 1960.

Fred Hansen,

Acting Administrator.

For the reasons set out in the preamble, part 51 of title 40 of the Code of Federal Regulations is amended to read as follows:

PART 51—[AMENDED]

1. The authority citation for part 51 continues to read as follows:

Authority: 42 U.S.C. 740l–7671q.

2. Section 51.350 is amended by revising paragraph (b)(1) and by adding paragraph (b)(5) to read as follows:

§ 51.350 Applicability.

* * * * *

(b) * * * (1) In an ozone transport region, the program shall cover all counties within subject MSAs or subject portions of MSAs, as defined by OMB in 1990, except largely rural counties having a population density of less than 200 persons per square mile based on the 1990 Census and counties with less than 1% of the population in the MSA may be excluded provided that at least 50% of the MSA population is included in the program. This provision does not preclude the voluntary inclusion of portions of an excluded county. Non-urbanized islands not connected to the mainland by roads, bridges, or tunnels may be excluded without regard to population.

* * * * *

(5) Notwithstanding the limitation in paragraph (b)(3) of this section, in an ozone transport region, states which opt for a program which meets the performance standard described in § 51.351(h) and claim in their SIP less emission reduction credit than the basic performance standard for one or more pollutants, may apply a geographic bubble covering areas in the state not otherwise subject to an I/M requirement to achieve emission reductions from other measures equal to or greater than what would have been achieved if the low enhanced performance standard were met in the subject I/M areas. Emissions reductions from non-I/M measures shall not be counted towards the OTR low enhanced performance standard.

* * * * *

3. Section 51.351 is amended by adding paragraph (h) to read as follows:

§ 51.351 Enhanced I/M performance standards.

* * * * *

(h) *Ozone Transport Region Low-Enhanced Performance Standard.* An attainment area, marginal ozone area, or moderate ozone area with a 1980 Census population of less than 200,000 in the urbanized area, in an ozone transport region, that is required to implement enhanced I/M under section 184(b)(1)(A) of the Clean Air Act, but was not previously required to or did not in fact implement basic I/M under the Clean Air Act as enacted prior to 1990 and is not subject to the requirements for basic I/M programs in this subpart, may select the performance standard described below in lieu of the standard described in paragraph (f) or (g) of this section as long as the difference in emission reductions between the program described in paragraph (g) and this paragraph are made up with other measures, as provided in § 51.350(b)(5). Offsetting measures shall not include those otherwise required by the Clean Air Act in the areas from which credit is bubbled. The program elements for this alternate OTR enhanced I/M performance standard are:

(1) *Network type.* Centralized testing.

(2) *Start date.* January 1, 1999.

(3) *Test frequency.* Annual testing.

(4) *Model year coverage.* Testing of 1968 and newer vehicles.

(5) *Vehicle type coverage.* Light duty vehicles, and light duty trucks, rated up to 8,500 pounds GVWR.

(6) *Exhaust emission test type.* Remote sensing measurements on 1968–1995 vehicles; on-board diagnostic system checks on 1996 and newer vehicles.

(7) *Emission standards.* For remote sensing measurements, a carbon monoxide standard of 7.5% (with at least two separate readings above this level to establish a failure).

(8) *Emission control device inspections.* Visual inspection of the catalytic converter on 1975 and newer vehicles and visual inspection of the positive crankcase ventilation valve on 1968–1974 vehicles.

(9) *Waiver rate.* A 3% waiver rate, as a percentage of failed vehicles.

(10) *Compliance rate.* A 96% compliance rate.

(11) *Evaluation dates.* Enhanced I/M program areas subject to the provisions of this paragraph shall be shown to obtain the same or lower VOC and NO_X emission levels as the model program described in this paragraph by January 1, 2000, 2003, 2006, and 2007. Equality of substituted emission reductions to the benefits of the low enhanced performance standard must be demonstrated for the same evaluation dates.

4. Section 51.353 is amended by adding paragraph (c)(5) to read as follows:

§ 51.353 Network type and program evaluation.

* * * * *

(c) * * *

(5) Areas that qualify for and choose to implement an OTR low enhanced I/M program, as established in § 51.351(h), and that claim in their SIP less emission reduction credit than the basic performance standard for one or more pollutants, are exempt from the requirements of paragraphs (c)(1) through (c)(4) of this section. The reports required under § 51.366 of this part shall be sufficient in these areas to satisfy the requirements of Clean Air Act for program reporting.

* * * * *

5. Section 51.364 is amended by adding paragraphs (e) and (f) to read as follows:

§ 51.364 Enforcement against contractors, stations and inspectors.

* * * * *

(e) Alternative quality assurance procedures or frequencies that achieve equivalent or better results may be approved by the Administrator. Statistical process control shall be used whenever possible to demonstrate the efficacy of alternatives.

(f) Areas that qualify for and choose to implement an OTR low enhanced I/M program, as established in § 51.351(h), and that claim in their SIP less emission reduction credit than the basic performance standard for one or more pollutants, are not required to meet the oversight specifications of this section.

6. Section 51.373 is amended by adding paragraph (f) to read as follows:

§ 51.373 Implementation deadlines.

* * * * *

(f) Areas that choose to implement an enhanced I/M program only meeting the requirements of § 51.351(h) shall fully implement the program no later than July 1, 1999. The availability and use of this late start date does not relieve the area of the obligation to meet the requirements of § 51.351(h)(11) by the end of 1999.

[FR Doc. 96–18922 Filed 7–24–96; 8:45 am]

BILLING CODE 6560–50–P

Reader Aids

Federal Register

Vol. 61, No. 144

Thursday, July 25, 1996

CUSTOMER SERVICE AND INFORMATION

Federal Register/Code of Federal Regulations

General Information, indexes and other finding aids **202–523–5227**

Laws

Public Laws Update Services (numbers, dates, etc.) **523–6641**
For additional information **523–5227**

Presidential Documents

Executive orders and proclamations **523–5227**
The United States Government Manual **523–5227**

Other Services

Electronic and on-line services (voice) **523–4534**
Privacy Act Compilation **523–3187**
TDD for the hearing impaired **523–5229**

ELECTRONIC BULLETIN BOARD

Free Electronic Bulletin Board service for Public Law numbers, Federal Register finding aids, and list of documents on public inspection. **202–275–0920**

FAX-ON-DEMAND

You may access our Fax-On-Demand service. You only need a fax machine and there is no charge for the service except for long distance telephone charges the user may incur. The list of documents on public inspection and the daily Federal Register's table of contents are available using this service. The document numbers are 7050-Public Inspection list and 7051-Table of Contents list. The public inspection list will be updated immediately for documents filed on an emergency basis.

NOTE: YOU WILL ONLY GET A LISTING OF DOCUMENTS ON FILE AND NOT THE ACTUAL DOCUMENT. Documents on public inspection may be viewed and copied in our office located at 800 North Capitol Street, N.W., Suite 700. The Fax-On-Demand telephone number is: **301–713–6905**

FEDERAL REGISTER PAGES AND DATES, JULY

33825–34366 1
34367–34712 2
34713–35082 3
35083–35588 5
35589–35914 8
35915–36276 9
36277–36492 10
36493–36608 11
36609–36808 12
36809–36988 15
36989–37198 16
37199–37350 17
37351–37656 18
37657–37806 19
37807–38048 22
38057–38352 23
38353–38562 24
38563–39038 25

CFR PARTS AFFECTED DURING JULY

At the end of each month, the Office of the Federal Register publishes separately a List of CFR Sections Affected (LSA), which lists parts and sections affected by documents published since the revision date of each title.

3 CFR

Proclamations:
6907 35083
6908 35587
6909 38049

Executive Orders:
13010 37347
13011 37657
13012 38051

Administrative Orders:
Memorandum:
July 8, 1996 38563
Notices:
July 22, 1996 38561
Presidential Determinations:
No. 96–34 of June 26, 1996 36493
No. 96–35 of June 26, 1996 36495
No. 96–36 of June 28, 1996 35075
No. 96–37 of June 29, 1996 36989
No. 96–38 of June 29, 1996 36991
No. 96–39 of June 6, 1996 38053
No. 96–40 of June 8, 1996 38055

4 CFR

28 36809
29 36809

5 CFR

530 34713
531 34713
532 36609
534 34713
550 34713
575 34713
581 34713
582 34713
630 34713
734 35088
890 37807
1001 36993
1660 36610
2634 35589
3201 35915
Ch. XXIII 35085
Ch. XXXV 36993
Ch. LXV 36246

Proposed Rules:
890 35973

7 CFR

2 37544
16 37199
29 .....37316, 37351
52 37663
58 35589
210 37670
225 37670
301 .....35102, 35107, 36811, 36812, 38353
400 .....34367, 38057
718 37544
719 37544
720 37544
723 37672
729 36997
790 37544
791 37544
793 37544
796 37544
868 34714
905 38354
906 37810
916 37812
917 37812
946 35109
948 36813
958 35592
989 36814
997 35594
998 35594
1106 35596
1230 35597
1240 38355
1400 37544
1401 37544
1402 37544
1405 37544
1412 37544
1413 37544
1421 37544
1425 37544
1427 37544
1430 37544
1434 37544
1435 37544
1446 37544
1464 37672
1468 37544
1470 37544
1477 37544
1478 37544
1479 37544
1479 37544
1497 37544
1498 37544
1493 33825
1703 37813
1910 35916
1924 35916
1941 35916
1943 35916
1945 35916
1951 35916
1955 35916
1962 35916
1965 35916
1980 35916

Proposed Rules:
1 38567

20 38107
210 35152
220 35152
225 35152
226 35152
300 34379
301 38017
318 38108
319 34379
868 35687
956 36827
1005 37628
1007 37628
1011 37628
1046 37628
1240 ....34385, 38407
1280 35982
1962 37405

8 CFR

103 35597
212 36610
214 35934
217 35598
264 37673
301 35111

Proposed Rules:

207 35984
208 35984

9 CFR

92 36816
112 33840
113 33840
201 ....36277, 36279
304 38806
308 38806
310 38806
318 37675
320 38806
327 38806
381 ....37675, 38806
416 38806
417 38806

Proposed Rules:

1 34386
3 ....34386, 34389
11 34747
92 36520
93 36520
94 ....35987, 36520
95 36520
96 36520
98 36520
301 35990
304 35990
308 35990
318 35992
319 35157
320 35990
381 ....35157, 35990
391 34747

10 CFR

51 37351
53 35935
110 35600
205 3511
420 35890
430 36974
450 35890
463 35114
784 36611
1003 35112
1010 35085
1021 36222

Proposed Rules:

34 37019
1021 35990

12 CFR

311 38356
324 33842
367 35115
1750 35607

Proposed Rules:

32 37227
205 37229
207 33874
218 34749
220 33874
221 33874
250 34749
327 34751
502 38114
516 38114
562 38114
563 38114
565 38114
574 38114
614 37230
704 38117
745 36663

14 CFR

1 34508
Ch. III 37814
25 34716
29 ....33963, 36965
39 ....33874, 34368, 34718, 35122, 35126, 35127, 35936, 35938, 35940, 35942, 35944, 35946, 36620, 36622, 36817, 37199, 37202, 37675, 37814
61 34508
71 ....33843 33844, 33845, 34720, 34721, 34722, 34723, 35307, 36283, 36284, 36285, 36286, 36820, 37001, 37113, 37204, 37205, 37352, 37677
73 35623
91 ....34508, 36286
95 37206
97 ....35623, 35624, 35626, 37352, 37354, 37356, 37677
119 35628
121 ....34508, 34927, 35628, 37222
125 34508
135 ....34508, 34927, 35628
141 34508
142 34508
211 34724
213 34724
1260 38058

Proposed Rules:

25 ....35056, 37844, 38374, 38552
39 ....34767, 35691, 35693, 35695, 36307, 36308, 36310, 36664, 36667, 36669, 37019, 38407
71 ....34391, 34393, 34394, 34395, 34396, 34397, 34398, 34769, 35991, 36311, 36312, 36313, 36314, 36315, 36316, 36317, 36520, 37113, 37230, 37231, 37407, 37408
91 38119
121 ....37144, 38119, 38552
125 37144
127 38119
129 37144
135 ....37144, 38119
440 38992

15 CFR

902 ....34570, 34930, 34966, 35145, 35548, 38358
923 36965

Proposed Rules:

30 36318
303 37845
922 33876

16 CFR

Proposed Rules:

303 35992

17 CFR

249 37357

Proposed Rules:

15 37409
16 37409
17 37409
18 37409
19 37409
240 ....36521, 37701
249 37701

18 CFR

154 38565
346 38567

Proposed Rules:

35 38663

19 CFR

10 33845
12 33845
102 ....33845, 37817
134 ....33845, 37678
201 37818
207 37818

Proposed Rules:

134 38119

20 CFR

404 ....38361, 38363

21 CFR

14 36624
175 37208
176 37209
177 ....34370, 37210
178 33846
184 36287
201 38046
210 37679
211 37679
331 38046
452 34726
500 37680
505 37680
507 37680
508 37680
510 ....35949, 37680
520 34727
522 ....34727, 35129, 36290, 37682
529 34727
558 ....34727, 35949, 36291
570 37680
801 37682
803 38346
804 38346
807 38346

Proposed Rules:

106 36154
107 36154
201 38047
331 38047
803 38348
804 38348

22 CFR

41 35628
126 36625
514 37002
608 36820

23 CFR

630 35629

24 CFR

0 36246
60 36462
200 36260
201 36260
202 ....36260, 36452
203 ....35024, 36260, 36452, 37798
206 ....35014, 36260
221 ....36260, 36452, 37798
233 36260
234 ....36260, 36452
280 36260
291 36260
570 36456
901 35633
941 ....35958, 38014

25 CFR

10 34371
211 35634
212 35634
700 35666

Proposed Rules:

5 36671
11 35158
12 35163
21 33876
45 34399
152 34400
169 37417
171 35167
256 36829
290 37022

26 CFR

301 37683

Proposed Rules:

1 ....35696, 36320
31 36320

27 CFR

18 37002
30 37002
53 37005
55 38084
275 37005

Proposed Rules:

53 37022

28 CFR

2 38569
42 34729
82 38085
552 38042
571 38042

Proposed Rules:

16 37425
17 36679
31 34770

38.....37964, 37976
58.....37426

29 CFR

102.....38368
1952.....36824
2509.....33847
2520.....33847
2550.....33847
Ch. XXVI.....34002, 36626, 37316, 37795
Ch. XL 34002, 36626, 37316, 37795
4044.....36968

Proposed Rules:

101.....35172
102.....35172
1910.....37849
1926.....37849
4001.....38409
4043.....38409
4065.....38409
Ch. XIV 34405

30 CFR

56.....36790
57.....36790
256.....34730
901.....37382
913.....37383
925.....38374
931.....38376
936.....38381
948.....38382

Proposed Rules:

206.....37865
943.....38420
946.....38420
948.....37023

31 CFR

321.....37196
356.....37007
515.....37385
575.....36627

Proposed Rules:

356.....38127

32 CFR

66.....38386
706 .....35958, 36291, 36497

Proposed Rules:

651.....37865

33 CFR

100.....36292
110.....36786
116.....36786
117.....36786, 37211
120.....37648
127.....36629
128.....37648
157.....36786
158.....36629
164.....35064
165 .....35130, 35132, 37211, 37684
179.....36629
181.....36786
183.....36629
334.....34732

Proposed Rules:

117.....35702
154.....34775
155.....34775
165.....37714
167.....35703

34 CFR

646.....38534

Proposed Rules:

75.....37184
206.....37184
231.....37184
235.....27184
369.....27184
371.....27184
373.....27184
375.....27184
376.....27184
378.....27184
380.....27184
381.....27184
385.....27184
386.....27184
387.....27184
388.....27184
389.....27184
390.....27184
396.....27184
610.....27184
612.....27184
630.....27184
637.....27184
658.....27184
660.....27184
661.....27184
669.....27184

35 CFR

61.....36497
123.....36497

36 CFR

1.....35133
13.....35133
222.....35959
223.....35960

Proposed Rules:

1190.....36688
1191.....36688, 37964

37 CFR

2.....36825
251.....37213

38 CFR

1.....33850, 38570
21.....36629

Proposed Rules:

1.....33878
17.....37024

39 CFR

5.....36498
7.....36498
10.....36498
20.....36500
3001.....37316

40 CFR

9.....33851, 34202
51.....39032
52 .....36292, 36501, 36502, 37216, 37387, 37390, 37393, 37833, 38086, 38388, 38391, 38571, 38574, 38577, 38582, 38590, 38591, 38594, 38597
55.....34202
63.....34140, 36295
70.....34733
71.....34202
79.....36506
80 .....35310, 35673, 35960
81.....37833
180 .....34739, 34741, 36298, 36299, 37218, 37,395
257.....34253
261.....34252, 37397
271.....34252, 38392
300.....35137, 35962
372.....38600
425.....35680
799.....37685

Proposed Rules:

50.....37427
51 .....35994, 36112, 38250
52 .....35998, 36004, 36320, 36534, 37030, 37232, 37428, 37429, 37875, 38129, 38250, 38423, 38664, 38682, 38683
55.....36012
61.....36326
63.....36326, 36835
79.....36535
80.....34775
81 .....33879, 36004, 37875
82.....37430
86.....37715
90.....34778
93.....35994, 36112
136.....36328
148.....38684
180 .....36329, 36331, 36689, 37233, 37433, 38423, 38426, 38428
185.....37233
186.....37233
260.....33881
261.....33881, 38684
262.....33881
264.....33881
268.....33881, 38684
269.....33881
271.....33881, 38684
300 .....36858, 37435, 37875, 37877
425.....35705
430.....36835

41 CFR

201.....35685

42 CFR

405.....35307
413.....37011
417.....35307, 38395
431.....35307, 38395
433.....38395
440.....38395
441.....38395
447.....38395
456.....38395
473.....35307
498.....35307

Proposed Rules:

410.....34614
415.....34614

43 CFR

1820.....37686
3710.....37116

Proposed Rules:

11.....37031
4700.....36333

44 CFR

62.....36513, 37687
64.....36514
65 .....33852, 33854, 38091, 38092
67.....33856, 38094

Proposed Rules:

67.....33882, 38129

45 CFR

Proposed Rules:

232.....37236
235.....37236

46 CFR

42.....35963
76.....35138
108.....36786
110.....36786
111 .....35927, 36608, 36786
112.....36786
113.....36786
161.....36786
167.....35138
514.....35685

Proposed Rules:

10.....36543, 36608
15.....36543, 36608

47 CFR

Ch. I 35964
1.....36629
20 .....33859, 38399, 38605
22.....34375, 38399
24.....33850
36.....34375
52.....38605
61.....36515, 36653
64.....36629, 36653
66.....36654
73 .....34368, 34743, 34744, 35139, 36302, 37840
90.....34375, 38403

Proposed Rules:

Ch. I 34405
1.....37241
20.....38687
24.....38693
52.....38687
73 .....34406, 34407, 34784, 34785, 35705, 37241, 37715, 37716, 37717
76.....34408, 34409

48 CFR

225.....37841
231.....36305
252.....37841

Proposed Rules:

219.....37878
252.....37878
401.....37032
453.....37032
917.....38701
950.....38701
952.....38701
970.....38701

49 CFR

1.....34745
40 .....37015, 37222, 37693
172.....38642
190.....38403
192 .....35139, 36825, 38403
193.....36825

195 36825
198 38403
199 37222
209 38644
219 37222
225 37842
233 33871
235 33871
236 33871
382 37222
571 ....33891, 36516, 36655
575 36655
653 37222
654 37222
1150 36965
1300 35139
1305 35141

Proposed Rules:

1 33886
8 33886
171 38702
173 38702
180 38702
192 ....34410, 34413
195 ....34410, 34413
383 38133
391 38133
393 36691
397 36016
571 ....36334, 36698, 38135,

50 CFR

Ch. III 35548
246 35548
280 35548
281 35548
282 35548
285 38656
298 35548
299 35548
600 37225
622 34930
625 34966
630 ....34746, 35971, 37842
638 34930
641 34930
642 34785
645 34930
646 34930
647 34930
648 ....34966, 35142, 38403, 38404
650 34966
651 34966
652 34966
653 34930
655 34966
657 34966
658 34930
659 34930
660 ....34570, 35143, 35144, 36662, 37843
661 34570
663 34570
669 34930
670 34930
679 ....34377, 36306, 37225, 37226, 37403, 37404, 37700, 37843, 38099, 38358, 38656
680 34570
681 ....34570, 35145
683 34570
685 34570
695 35548
697 34746

Proposed Rules:

17 ....36020, 36021, 36346, 37034, 38702
20 37994
229 37035
300 38703
642 34785
648 ....37241, 37436, 38430
679 ....35174, 36702, 37041

REMINDERS

The items in this list were editorially compiled as an aid to Federal Register users. Inclusion or exclusion from this list has no legal significance.

RULES GOING INTO EFFECT TODAY

COMMERCE DEPARTMENT

National Oceanic and Atmospheric Administration

Tuna, Atlantic bluefin fisheries; published 7-25-96

ENERGY DEPARTMENT

Energy Efficiency and Renewable Energy Office

Energy conservation:

Federal energy management and planning programs--

Life cycle cost analyses; methodology and procedures; published 6-25-96

ENVIRONMENTAL PROTECTION AGENCY

Clean Air Act:

State operating permits programs--

Texas; published 6-25-96

Superfund program:

Toxic chemical release reporting; community-right-to-know--

Hydrochloric acid; status modification on list of toxic chemicals subject to reporting requirements; published 7-25-96

FEDERAL COMMUNICATIONS COMMISSION

Radio services, special:

Interactive video and data service licensees--

Mobile service provided on ancillary basis; published 6-25-96

Television broadcasting:

Cable television systems--

Equipment costs on franchise, system, regional, or company level; aggregation; published 6-25-96

GOVERNMENT ETHICS OFFICE

Public financial disclosure, conflicts of interest, and certificates of divestiture for executive branch officials; published 6-25-96

Public financial disclosure, conflicts of interest, and certificates of divesture for executive branch officials

Correction; published 7-8-96

TRANSPORTATION DEPARTMENT

Federal Aviation Administration

Airworthiness directives:

Fairchild; published 7-15-96

Airworthiness standards:

Normal, utility, acrobatic, and commuter category airplanes--

Powerplant instruments; fuel pressure indication; published 3-27-96

TRANSPORTATION DEPARTMENT

Federal Railroad Administration

Railroad safety enforcement procedures:

Hazardous materials regulations, violations thereof; penalty guidelines; published 7-25-96

VETERANS AFFAIRS DEPARTMENT

Career employment; part-time; published 7-25-96

COMMENTS DUE NEXT WEEK

AGRICULTURE DEPARTMENT

Agricultural Marketing Service

Onions (sweet) grown in Washington and Oregon; comments due by 7-30-96; published 7-15-96

AGRICULTURE DEPARTMENT

Animal and Plant Health Inspection Service

Exportation and importation of animals and animal products:

African swine fever; disease status change--

Spain; comments due by 7-29-96; published 5-29-96

Plant-related quarantine, foreign:

Fruits and vegetables; importation; comments due by 8-1-96; published 7-2-96

AGRICULTURE DEPARTMENT

Federal Crop Insurance Corporation

Crop insurance regulations:

Sugar beets; comments due by 7-30-96; published 5-31-96

AGRICULTURE DEPARTMENT

Farm Service Agency

Program regulations:

Personal property--

Post bankruptcy loan servicing notices; comments due by 8-2-96; published 7-18-96

AGRICULTURE DEPARTMENT

Food Safety and Inspection Service

Meat and poultry inspection:

Fee increases; comments due by 8-2-96; published 7-3-96

AGRICULTURE DEPARTMENT

Rural Business-Cooperative Service

Program regulations:

Personal property--

Post bankruptcy loan servicing notices; comments due by 8-2-96; published 7-18-96

AGRICULTURE DEPARTMENT

Rural Housing Service

Program regulations:

Personal property--

Post bankruptcy loan servicing notices; comments due by 8-2-96; published 7-18-96

AGRICULTURE DEPARTMENT

Rural Utilities Service

Program regulations:

Personal property--

Post bankruptcy loan servicing notices; comments due by 8-2-96; published 7-18-96

COMMERCE DEPARTMENT

National Oceanic and Atmospheric Administration

Fishery conservation and management:

Caribbean, Gulf of Mexico, and South Atlantic fisheries; comments due by 8-2-96; published 7-3-96

DEFENSE DEPARTMENT

Army Department

Military traffic management:

Motor common carriers of perishable subsistence and bulk fuel; cargo insurance requirements; comments due by 7-29-96; published 6-27-96

DEFENSE DEPARTMENT

Federal Acquisition Regulation (FAR):

Final indirect cost rates; comments due by 7-29-96; published 5-28-96

EDUCATION DEPARTMENT

Educational research and improvement:

Exemplary and promising programs designation; conduct standards and activities evaluation; comments due by 8-2-96; published 6-3-96

ENERGY DEPARTMENT

Federal Energy Regulatory Commission

Electric utilities (Federal Power Act):

Capacity reservation open access transmission tariffs; comments due by 8-1-96; published 5-10-96

ENVIRONMENTAL PROTECTION AGENCY

Air pollutants, hazardous; national emission standards:

Nonhandheld new nonroad phase I small spark-ignition engines, class I and II; carbon monoxide standard; comments due by 8-2-96; published 7-3-96

Air programs; fuels and fuel additives:

Reformulated gasoline program; alternative analytical test methods use; comments due by 8-2-96; published 7-3-96

Air quality implementation plans; approval and promulgation; various States:

Alaska; comments due by 7-29-96; published 6-28-96

Georgia; comments due by 7-29-96; published 6-27-96

Kentucky; comments due by 7-29-96; published 6-28-96

Pennsylvania; comments due by 8-2-96; published 7-16-96

Air quality planning purposes; designation of areas:

Washington; comments due by 7-31-96; published 7-1-96

Hazardous waste:

Hazardous waste management system--

Contaminated media; management requirements; comments due by 7-29-96; published 4-29-96

Management facilities; solid waste management units (SWMUs), corrective action; comments due by 7-30-96; published 5-1-96

Pesticides; tolerances in food, animal feeds, and raw agricultural commodities:

Dicofol, etc.; comments due by 7-30-96; published 5-29-96

Pesticide chemicals; various tolerance actions; comments due by 7-29-96; published 5-29-96

FEDERAL COMMUNICATIONS COMMISSION

Radio stations; table of assignments:

California; comments due by 7-29-96; published 6-17-96

Hawaii; comments due by 7-29-96; published 6-19-96

New York; comments due by 7-29-96; published 6-19-96

South Carolina; comments due by 7-29-96; published 6-20-96

South Dakota; comments due by 7-29-96; published 6-20-96

Wisconsin; comments due by 7-29-96; published 6-17-96

FEDERAL RESERVE SYSTEM

Availability of funds and collection of checks (Regulation CC):

Miscellaneous amendments; comments due by 8-2-96; published 6-3-96

Electronic fund transfers (Regulation E):

Home banking services disclosure, new accounts error resolution and stored-value cards, etc.; comments due by 8-1-96; published 5-2-96

Loan guarantees for defense production (Regulation V); comments due by 7-29-96; published 5-28-96

Securities credit transactions (Regulations G, T, and U); comments due by 8-2-96; published 5-6-96

Securities:

Relations with dealers in securities under section 32, 1933 Banking Act (Regulation R); and miscellaneous interpretations; comments due by 8-2-96; published 7-3-96

HEALTH AND HUMAN SERVICES DEPARTMENT

Food and Drug Administration

Animal drugs, feeds, and related products:

Extralabel drug use in animals; comments due by 7-31-96; published 5-17-96

Chlorofluorocarbons and other ozone-depleting substances, products containing or manufactured with; warning statements; comments due by 8-1-96; published 5-3-96

Human drugs:

Antibiotic drugs--

Clarithromycin granules for oral suspension; comments due by 8-2-96; published 7-3-96

Current good manufacturing practice--

Finished pharmaceuticals; manufacturing, quality control, and documentation requirements; comments due by 8-1-96; published 5-3-96

HEALTH AND HUMAN SERVICES DEPARTMENT

Health Care Financing Administration

Medicare:

Hospital inpatient prospective payment systems and FY 1997 rates; comments due by 7-30-96; published 5-31-96

INTERIOR DEPARTMENT

Indian Affairs Bureau

BIA rules applicability; comments due by 8-2-96; published 6-3-96

Energy and minerals:

Ute Indian Tribe's undivided tribal assets on Uintah and Ouray Reservation, UT; management by Tribe and Ute Distribution Corporation; comments due by 8-2-96; published 6-3-96

Indian Self-Determination and Education Assistance Act program:

Contracts, grants, school construction contracts, etc.; comments due by 8-2-96; published 6-3-96

Land and water:

Land records and title documents; comments due by 8-2-96; published 6-3-96

INTERIOR DEPARTMENT

Fish and Wildlife Service

Migratory bird hunting:

Early-season regulations (1996-1997); proposed frameworks; comments due by 8-1-96; published 7-22-96

INTERIOR DEPARTMENT

Minerals Management Service

Royalty management:

Royalty relief for producing leases and existing leases in deep water; comments due by 7-30-96; published 5-31-96

INTERIOR DEPARTMENT

Surface Mining Reclamation and Enforcement Office

Federal regulatory review:

Permanent program and abandoned mine land reclamation plan submissions; comments due by 7-29-96; published 5-28-96

Permanent program and abandoned mine land reclamation plan submissions:

West Virginia; comments due by 7-31-96; published 7-16-96

NATIONAL LABOR RELATIONS BOARD

Procedural rules:

Attorneys or party representatives; misconduct before agency; comments due by 8-2-96; published 6-17-96

SECURITIES AND EXCHANGE COMMISSION

Securities:

Executive and director compensation disclosure; streamlining and consolidation; comments due by 7-29-96; published 6-14-96

TRANSPORTATION DEPARTMENT

Coast Guard

Federal regulatory review:

Lifesaving equipment; comments due by 7-31-96; published 5-20-96

TRANSPORTATION DEPARTMENT

Omnibus Transportation Employee Testing Act of 1991:

Workplace drug and alcohol testing programs--

Drug and alcohol procedural rules; update; comments due by 7-29-96; published 4-29-96

TRANSPORTATION DEPARTMENT

Federal Aviation Administration

Airworthiness directives:

de Havilland; comments due by 7-29-96; published 7-3-96

Boeing; comments due by 7-29-96; published 6-19-96

Don Luscombe Aviation History Foundation; comments due by 7-31-96; published 5-29-96

Gulfstream; comments due by 8-2-96; published 6-24-96

Israel Aircraft Industries, Ltd.; comments due by 7-29-96; published 5-29-96

McDonnell Douglas; comments due by 7-29-96; published 6-19-96

SAAB; comments due by 7-30-96; published 5-31-96

Twin Commander Aircraft Corp.; comments due by 7-29-96; published 6-6-96

Airworthiness standards:

Special conditions--

Cessna 500, 550, and S550 airplanes; comments due by 8-2-96; published 7-3-96

Class E airspace; comments due by 7-29-96; published 6-27-96

VOR Federal airways; comments due by 7-29-96; published 6-17-96

TRANSPORTATION DEPARTMENT

Federal Highway Administration

Motor carrier safety standards:

Practice rules for proceedings, investigations, and disqualifications and penalties; comments due by 7-29-96; published 4-29-96

TRANSPORTATION DEPARTMENT

Research and Special Programs Administration

Hazardous materials:

Performance-oriented packaging standards; final transitional provisions; comments due by 8-2-96; published 6-26-96

TREASURY DEPARTMENT

Bank Secrecy Act:

Currency and foreign transactions; financial reporting and recordkeeping requirements--

Exemptions from currency transaction reporting; comments due by 8-1-96; published 4-24-96

LIST OF PUBLIC LAWS

Note: No public bills which have become law were received by the Office of the Federal Register for inclusion in today's **List of Public Laws**.

Last List July 24, 1996