12–26–96
Vol. 61 No. 249
Pages 67927–68116

federal register

Thursday
December 26, 1996

Briefings on how to use the Federal Register
For information on briefings in Washington, DC, see announcement on the inside cover of this issue

Now Available Online

Code of Federal Regulations

via

GPO Access

(Selected Volumes)

Free, easy, online access to selected *Code of Federal Regulations (CFR)* volumes is now available via *GPO Access*, a service of the United States Government Printing Office (GPO). *CFR* titles will be added to *GPO Access* incrementally throughout calendar years 1996 and 1997 until a complete set is available. GPO is taking steps so that the online and printed versions of the *CFR* will be released concurrently.

The *CFR* and *Federal Register* on *GPO Access*, are the official online editions authorized by the Administrative Committee of the Federal Register.

New titles and/or volumes will be added to this online service as they become available.

http://www.access.gpo.gov/nara/cfr

For additional information on ***GPO Access*** products, services and access methods, see page II or contact the *GPO Access* User Support Team via:

★ Phone: toll-free: 1-888-293-6498
★ Email: gpoaccess@gpo.gov

FEDERAL REGISTER Published daily, Monday through Friday, (not published on Saturdays, Sundays, or on official holidays), by the Office of the Federal Register, National Archives and Records Administration, Washington, DC 20408, under the Federal Register Act (49 Stat. 500, as amended; 44 U.S.C. Ch. 15) and the regulations of the Administrative Committee of the Federal Register (1 CFR Ch. I). Distribution is made only by the Superintendent of Documents, U.S. Government Printing Office, Washington, DC 20402.

The Federal Register provides a uniform system for making available to the public regulations and legal notices issued by Federal agencies. These include Presidential proclamations and Executive Orders and Federal agency documents having general applicability and legal effect, documents required to be published by act of Congress and other Federal agency documents of public interest. Documents are on file for public inspection in the Office of the Federal Register the day before they are published, unless earlier filing is requested by the issuing agency.

The seal of the National Archives and Records Administration authenticates this issue of the Federal Register as the official serial publication established under the Federal Register Act. 44 U.S.C. 1507 provides that the contents of the Federal Register shall be judicially noticed.

The Federal Register is published in paper, 24x microfiche and as an online database through *GPO Access*, a service of the U.S. Government Printing Office. The online edition of the Federal Register on *GPO Access* is issued under the authority of the Administrative Committee of the Federal Register as the official legal equivalent of the paper and microfiche editions. The online database is updated by 6 a.m. each day the Federal Register is published. The database includes both text and graphics from Volume 59, Number 1 (January 2, 1994) forward. Free public access is available on a Wide Area Information Server (WAIS) through the Internet and via asynchronous dial-in. Internet users can access the database by using the World Wide Web; the Superintendent of Documents home page address is http://www.access.gpo.gov/su__docs/, by using local WAIS client software, or by telnet to swais.access.gpo.gov, then login as guest, (no password required). Dial-in users should use communications software and modem to call (202) 512–1661; type swais, then login as guest (no password required). For general information about *GPO Access*, contact the *GPO Access* User Support Team by sending Internet e-mail to gpoaccess@gpo.gov; by faxing to (202) 512–1262; or by calling toll free 1–888–293–6498 or (202) 512–1530 between 7 a.m. and 5 p.m. Eastern time, Monday–Friday, except for Federal holidays.

The annual subscription price for the Federal Register paper edition is $494, or $544 for a combined Federal Register, Federal Register Index and List of CFR Sections Affected (LSA) subscription; the microfiche edition of the Federal Register including the Federal Register Index and LSA is $433. Six month subscriptions are available for one-half the annual rate. The charge for individual copies in paper form is $8.00 for each issue, or $8.00 for each group of pages as actually bound; or $1.50 for each issue in microfiche form. All prices include regular domestic postage and handling. International customers please add 25% for foreign handling. Remit check or money order, made payable to the Superintendent of Documents, or charge to your GPO Deposit Account, VISA or MasterCard. Mail to: New Orders, Superintendent of Documents, P.O. Box 371954, Pittsburgh, PA 15250–7954.

There are no restrictions on the republication of material appearing in the Federal Register.

How To Cite This Publication: Use the volume number and the page number. Example: 60 FR 12345.

SUBSCRIPTIONS AND COPIES

PUBLIC	
Subscriptions:	
Paper or fiche	202–512–1800
Assistance with public subscriptions	512–1806
General online information	202–512–1530 1–888–293–6498
Single copies/back copies:	
Paper or fiche	512–1800
Assistance with public single copies	512–1803
FEDERAL AGENCIES	
Subscriptions:	
Paper or fiche	523–5243
Assistance with Federal agency subscriptions	523–5243

For other telephone numbers, see the Reader Aids section at the end of this issue.

FEDERAL REGISTER WORKSHOP

THE FEDERAL REGISTER: WHAT IT IS AND HOW TO USE IT

FOR: Any person who uses the Federal Register and Code of Federal Regulations.

WHO: Sponsored by the Office of the Federal Register.

WHAT: Free public briefings (approximately 3 hours) to present:

1. The regulatory process, with a focus on the Federal Register system and the public's role in the development of regulations.
2. The relationship between the Federal Register and Code of Federal Regulations.
3. The important elements of typical Federal Register documents.
4. An introduction to the finding aids of the FR/CFR system.

WHY: To provide the public with access to information necessary to research Federal agency regulations which directly affect them. There will be no discussion of specific agency regulations.

WASHINGTON, DC

WHEN: January 28, 1997 at 9:00 am

WHERE: Office of the Federal Register
Conference Room
800 North Capitol Street, NW
Washington, DC
(3 blocks north of Union Station Metro)

RESERVATIONS: 202–523–4538

Printed on recycled paper containing 100% post consumer waste

Contents

Federal Register
Vol. 61, No. 249
Thursday, December 26, 1996

Agricultural Marketing Service
RULES
Milk marketing orders:
Black Hills, SD, 67927
NOTICES
Agency information collection activities:
Proposed collection; comment request, 67996–67997

Agriculture Department
See Agricultural Marketing Service
See Animal and Plant Health Inspection Service
See Forest Service

Animal and Plant Health Inspection Service
RULES
Interstate transportation of animals and animal products (quarantine):
Tuberculosis in cattle and bison—
State and area classifications, 67928–67929
Viruses, serums, toxins, etc.:
Encephalomyelitis vaccine, Eastern, Western, and Venezuelan, killed virus, 67929–67930

Arts and Humanities, National Foundation
See National Foundation on the Arts and the Humanities

Children and Families Administration
NOTICES
Organization, functions, and authority delegations:
Regional offices, 68045–68047

Coast Guard
RULES
Drawbridge operations:
Florida, 67947–67948
Ports and waterways safety:
Back River and Foster Creek, SC; safety zone, 67948–67949
Regattas and marine parades:
Delaware River, PA; New Year's Eve fireworks, 67946
First Coast Guard District fireworks displays, 67946–67947
PROPOSED RULES
Drawbridge operations:
New Jersey, 67970–67971
Ports and waterways safety:
Lake Erie, South Passage of the Western Basin—
Regulated navigation area, 67971–67975
NOTICES
Eighth Coast Guard District Regional Examination Center; designated areas for issuance of first class pilot licenses and endorsements, 68090–68091
Meetings:
Commercial ships; compressed and liquefied natural gas use as fuel, 68091
Houston/Galveston Navigation Safety Advisory Committee, 68091

Commerce Department
See National Oceanic and Atmospheric Administration

Commodity Futures Trading Commission
NOTICES
Contract market proposals:
Chicago Board of Trade—
Corn and soybeans futures, 67998–68013

Defense Department
See Navy Department
RULES
Acquisition regulations:
Contract termination, solicitation, and clauses, 67952
Civil monetary penalties inflation adjustment, 67944–67946
NOTICES
Meetings:
Defense Partnership Council, 68013–68014

Drug Enforcement Administration
NOTICES
Applications, hearings, determinations, etc.:
Kelly, Irene C.; correction, 68097
Rozeboom, Earl G. M.D.; correction, 68097

Employment and Training Administration
NOTICES
Adjustment assistance:
Bull HN Information Systems, Inc., 68057–68058
Connor Forest Industries, Inc., 68058
E.I. DuPont DeNemours & Co., 68058–68059
Olga Co., 68059
Velco Electronics, Inc., 68059
Warnaco, Inc., 68059
NAFTA transitional adjustment assistance:
Goodyear Tire & Rubber Co., 68059–68060

Employment Standards Administration
NOTICES
Agency information collection activities:
Proposed collection; comment request, 68060–68061

Energy Department
See Energy Research Office
See Federal Energy Regulatory Commission
See Hearings and Appeals Office, Energy Department
NOTICES
Environmental statements; availability, etc.:
Stockpile Stewardship and Management Program, 68014–68026

Energy Research Office
NOTICES
Grants and cooperative agreements; availability, etc.:
Terrestrial Ecology and Global Change Joint Program, 68026–68030

Environmental Protection Agency
RULES
Reporting and recordkeeping requirements, 67950–67951
PROPOSED RULES
Superfund program:
National oil and hazardous substances contingency plan—
North Dakota, 67975–67977

NOTICES
Pesticide, food, and feed additive petitions:
American Cyanamid Co., 68036–68039
Pesticide programs:
Worker protection standards—
Chlorothalonil; withdrawn, 68034
Pesticide registration, cancellation, etc.:
Cartilage Technologies, Inc., 68035
Rodenticide baits and other vertebrate pesticides, 68035–68036
Toxic and hazardous substances control:
Premanufacture exemption approvals, 68039–68040

Equal Employment Opportunity Commission
NOTICES
Agency information collection activities:
Proposed collection; comment request, 68040

Federal Aviation Administration
PROPOSED RULES
Airworthiness directives:
Aerospace Technologies of Australia Pty Ltd., 67965–67967
Class E airspace, 67967

Federal Communications Commission
PROPOSED RULES
Practice and procedure:
Formal complaints filed against common carriers; processing, 67978–67988
NOTICES
Common carrier services:
Bell Operating Company; section 271, application procedures, 68040–68043

Federal Energy Regulatory Commission
NOTICES
Environmental statements; availability, etc.:
Pacific Gas & Electric Co., 68033
Applications, hearings, determinations, etc.:
ANR Pipeline Co., 68030
El Paso Natural Gas Co., 68030
Georgia Power Co., 68031
Gulf States Transmission Corp., 68031
Koch Gateway Pipeline Co., 68032
Mojave Pipeline Co., 68030
NorAm Gas Transmission Co., 68032
Pacific Gas Transmission Co., 68032
Williams Natural Gas Co., 68032–68033

Federal Maritime Commission
NOTICES
Freight forwarder licenses:
MAS & E Company et al., 68043

Federal Reserve System
NOTICES
Banks and bank holding companies:
Formations, acquisitions, and mergers, 68043
Permissible nonbanking activities, 68043–68044
Fair credit reporting; public availability and use of social security numbers and other sensitive identifying information; comment request, 68044–68045

Federal Transit Administration
RULES
Prohibited drug use and alcohol misuse prevention in transit operations:
Random drug testing program, 67962

Fish and Wildlife Service
NOTICES
Endangered and threatened species permit applications, 68049–68050
Marine mammal permit applications, 68050–68051

Foreign Assets Control Office
RULES
Foreign assets control regulations:
Antiterrorism and Effective Death Penalty Act; implementation—
Terrorism list governments sanctions regulations, 67943–67944

Forest Service
NOTICES
Environmental statements; availability, etc.:
Wallowa-Whitman National Forest, OR; cancelled, 67997
Meetings:
Olympic Provincial Interagency Executive Committee Advisory Committee, 67997

General Services Administration
RULES
Federal travel:
Long-distance telephone call certification requirement; repeal, 67951

Health and Human Services Department
See Children and Families Administration
See Health Care Financing Administration

Health Care Financing Administration
NOTICES
Agency information collection activities:
Proposed collection; comment request, 68048

Hearings and Appeals Office, Energy Department
NOTICES
Cases filed, 68033–68034

Housing and Urban Development Department
RULES
Mortgage and loan insurance programs:
Home equity conversion mortgage insurance demonstration; mortgage balance definition, etc.
Correction, 67930–67931
NOTICES
Public and Indian housing:
Reasonable revitalization potential assessment of public housing required by law—
Timeframe amendment, 68048–68049

Immigration and Naturalization Service
NOTICES
Agency information collection activities:
Proposed collection; comment request, 68056–68057
Submission for OMB review; comment request, 68057

Interior Department
See Fish and Wildlife Service
See Land Management Bureau
See National Park Service
See Reclamation Bureau
See Special Trustee for American Indians Office
See Surface Mining Reclamation and Enforcement Office
NOTICES
Committees; establishment, renewal, termination, etc.:
California Desert District Advisory Council, 68049

Internal Revenue Service
RULES
Income taxes:
Partnerships; distribution of marketable securities, 67936–67942

International Development Cooperation Agency
See Overseas Private Investment Corporation

International Trade Commission
NOTICES
Import investigations:
Engineered process gas turbo-compressor systems from—
Japan, 68053–68054
Ethyl alcohol for fuel use from Caribbean Based Initiative (CBI) beneficiary countries—
Base quantity determination, 68054–68055
Sodium azide from—
Japan, 68055
Meetings; Sunshine Act, 68055

Justice Department
See Drug Enforcement Administration
See Immigration and Naturalization Service
NOTICES
Pollution control; consent judgments:
City of San Diego et al., 68055–68056

Labor Department
See Employment and Training Administration
See Employment Standards Administration
See Labor-Management Standards Office
See Mine Safety and Health Administration

Labor-Management Standards Office
RULES
Labor organizations administrative practices and financial transactions; reporting and disclosure of information on computer-generated formats for reports, 67942

Land Management Bureau
NOTICES
Meetings:
Green River Basin Advisory Committee, 68051

Maritime Administration
NOTICES
Applications, hearings, determinations, etc.:
Sargeant Marine, Inc., 68091–68092

Mine Safety and Health Administration
NOTICES
Agency information collection activities:
Proposed collection; comment request, 68061–68063

National Foundation on the Arts and the Humanities
NOTICES
Meetings:
Combined Arts Advisory Panel, 68063
Humanities panel, 68063–68064

National Highway Traffic Safety Administration
RULES
Motor vehicle safety standards:
Occupant crash protection—
Hybrid III test dummy modifications, 67953–67962

National Oceanic and Atmospheric Administration
RULES
Fishery conservation and management:
Alaska; fisheries of Exclusive Economic Zone—
Individual fish quota program; sweep-up adjustments, 67962–67964
PROPOSED RULES
Fishery conservation and management:
Alaska; fisheries of Exclusive Economic Zone—
Scallop fishery vessel entry; temporary moratorium, 67988
NOTICES
Marine mammals:
Incidental taking; authorization letters, etc.—
BP Exploration (Alaska), 67997
Permits:
Marine mammals, 67998, 68050–68051

National Park Service
NOTICES
Environmental statements; availability, etc.:
Olympic National Park, WA; Lake Crescent watershed, 68051
Meetings:
Missouri National Recreational River Advisory Group, 68051–68052

National Science Foundation
NOTICES
Meetings:
Bioengineering and Environmental Systems Special Emphasis Panel, 68064
Chemical and Transport Systems Special Emphasis Panel, 68064–68065
Civil and Mechanical Systems Special Emphasis Panel, 68065
Electrical and Communications Systems Special Emphasis Panel, 68065–68066
Mathematical Sciences Special Emphasis Panel, 68066
Undergraduate Education Special Emphasis Panel, 68066

Navy Department
NOTICES
Environmental statements; availability, etc.:
Naval Sea System Command, Arlington, VA; relocation to Washington Navy Yard, DC, 68014

Nuclear Regulatory Commission
NOTICES
Enforcement actions policy and procedure:
Policy statement revision; correction, 68070–68071
Applications, hearings, determinations, etc.:
Massachusetts radiation control program; staff assessment, 68066–68070

Overseas Private Investment Corporation
NOTICES
Agency information collection activities:
Submission for OMB review; comment request, 68053

Pension Benefit Guaranty Corporation
RULES
Regulations; reorganization, renumbering, and reinvention:
Federal regulatory reform
Correction, 67942–67943

Postal Service
NOTICES
Meetings; Sunshine Act, 68071

Railroad Retirement Board
NOTICES
Agency information collection activities:
Proposed collection; comment request, 68071–68072

Reclamation Bureau
NOTICES
Agency information collection activities:
Proposed collection; comment request, 68052

Research and Special Programs Administration
NOTICES
Pipeline Risk Management Demonstration Program; guidance on performance measures, 68092

Securities and Exchange Commission
PROPOSED RULES
Investment companies:
National Securities Markets Improvement Act of 1996; private investment companies, 68100–68115
NOTICES
Agency information collection activities:
Submission for OMB review; comment request, 68072–68073
Self-regulatory organizations; proposed rule changes:
Municipal Securities Rulemaking Board, 68078–68081
National Association of Securities Dealers, Inc., 68081–68082
New York Stock Exchange, Inc., 68082–68087
Participants Trust Co., 68087–68089
Applications, hearings, determinations, etc.:
Centennial Technologies, Inc., 68073
Industrial Credit and Investment Corporation of India, 68073–68075
Providence Energy Corp., 68075–68076
Van Kampen American Capital Equity Opportunity Trust et al., 68076–68078

Special Trustee for American Indians Office
RULES
American Indian Trust Fund Management Reform Act:
Restricted tribal funds withdrawal and management, 67931–67936

State Department
NOTICES
Meetings:
International Economic Policy Advisory Committee, 68089–68090

Surface Mining Reclamation and Enforcement Office
PROPOSED RULES
Permanent program and abandoned mine land reclamation plan submissions:
Iowa, 67967–67970
NOTICES
Agency information collection activities:
Proposed collection; comment request, 68052–68053

Surface Transportation Board
NOTICES
Rail carriers:
Cost recovery procedures—
Adjustment factor, 68092
Railroad operation, acquisition, construction, etc.:
Union Pacific Railroad Co., et al., 68092–68093

Transportation Department
See Coast Guard
See Federal Aviation Administration
See Federal Transit Administration
See Maritime Administration
See National Highway Traffic Safety Administration
See Research and Special Programs Administration
See Surface Transportation Board
RULES
Organization, functions, and authority delegations:
Commandant, United States Coast Guard, 67952–67953

Treasury Department
See Foreign Assets Control Office
See Internal Revenue Service
NOTICES
Organization, functions, and authority delegations:
Department of the Treasury Seal, 68093–68094

United States Information Agency
NOTICES
Grants and cooperative agreements; availability, etc.:
International educational and cultural activities—
Albania; medial management training programs, 68094–68096

Veterans Affairs Department
RULES
Adjudication; pensions, compensation, dependency, etc.:
Miscellaneous amendments, 67949–67950

Separate Parts In This Issue

Part II
Securities and Exchange Commission, 68100–68115

Reader Aids
Additional information, including a list of public laws, telephone numbers, reminders, and finding aids, appears in the Reader Aids section at the end of this issue.

Electronic Bulletin Board
Free Electronic Bulletin Board service for Public Law numbers, Federal Register finding aids, and a list of documents on public inspection is available on 202–275–1538 or 275–0920.

CFR PARTS AFFECTED IN THIS ISSUE

A cumulative list of the parts affected this month can be found in the Reader Aids section at the end of this issue.

7 CFR
1075.....67927

9 CFR
77.....67928
113.....67929

14 CFR

Proposed Rules:
39.....67965
71.....67967

17 CFR

Proposed Rules:
270.....68100

24 CFR
206.....67930

25 CFR
Ch. VII.....67931
1200.....67931

26 CFR
1.....67936

29 CFR
402.....67942
403.....67942
404.....67942
405.....67942
406.....67942
408.....67942
409.....67942
4000.....67942
4022.....67942
4041.....67942

30 CFR

Proposed Rules:
915.....67967

31 CFR
596.....67943

32 CFR
269.....67944

33 CFR
100 (2 documents) 67946
117.....67947
165.....67948

Proposed Rules:
117.....67970
165.....67971

38 CFR
3.....67949

40 CFR
9.....67950

Proposed Rules:
300.....67975

41 CFR
301.....67951

47 CFR

Proposed Rules:
0.....67978
1.....67978

48 CFR
249.....67952
252.....67952

49 CFR
1.....67952
572.....67953
653.....67962
654.....67962

50 CFR
679.....67962

Proposed Rules:
679.....67990

Rules and Regulations

Federal Register
Vol. 61, No. 249
Thursday, December 26, 1996

This section of the FEDERAL REGISTER contains regulatory documents having general applicability and legal effect, most of which are keyed to and codified in the Code of Federal Regulations, which is published under 50 titles pursuant to 44 U.S.C. 1510.

The Code of Federal Regulations is sold by the Superintendent of Documents. Prices of new books are listed in the first FEDERAL REGISTER issue of each week.

DEPARTMENT OF AGRICULTURE

Agricultural Marketing Service

7 CFR Part 1075

[DA–96–12]

Milk in the Black Hills, South Dakota, Marketing Area; termination of the Order

AGENCY: Agricultural Marketing Service, USDA.

ACTION: Final rule; Termination order.

SUMMARY: This rule terminates the remaining administrative provisions of the Black Hills, South Dakota, Federal milk marketing order (Order 75), effective December 31, 1996. All of the monthly operating provisions were terminated as of October 1, 1996. Termination of this order was requested by Black Hills Milk Producers, a cooperative association that represents all of the producers whose milk is pooled under the order.

EFFECTIVE DATE: December 31,1996.

FOR FURTHER INFORMATION CONTACT: Constance M. Brenner, Marketing Specialist, USDA/AMS/Dairy Division, Order Formulation Branch, Room 2971, South Building, P.O. Box 96456, Washington, DC 20090–6456, (202) 720–2357; e-mail address, connie__m__brenner@usda.gov.

SUPPLEMENTARY INFORMATION: Prior document in this proceeding: Termination Order: Issued August 30, 1996; published September 6, 1996 (61 FR 47038).

The Department is issuing this rule in conformance with Executive Order 12866.

This termination order has been reviewed under Executive Order 12988, Civil Justice Reform. This rule is not intended to have a retroactive effect. This rule will not preempt any state or local laws, regulations, or policies, unless they present an irreconcilable conflict with this rule.

The Agricultural Marketing Agreement Act of 1937, as amended (7 U.S.C. 601–674), provides that administrative proceedings must be exhausted before parties may file suit in court. Under section 608c(15)(A) of the Act, any handler subject to an order may request modification or exemption from such order by filing with the Secretary a petition stating that the order, any provision of the order, or any obligation imposed in connection with the order is not in accordance with the law. A handler is afforded the opportunity for a hearing on the petition. After a hearing, the Secretary would rule on the petition. The Act provides that the district court of the United States in any district in which the handler is an inhabitant, or has its principal place of business, has jurisdiction in equity to review the Secretary's ruling on the petition, provided a bill in equity is filed not later than 20 days after the date of the entry of the ruling.

This order of termination is issued pursuant to the provisions of the Agricultural Marketing Agreement Act and of the order regulating the handling of milk in the Black Hills, South Dakota, marketing area.

Small Business Consideration

In accordance with the Regulatory Flexibility Act (5 U.S.C. 601 *et seq.*), the Agricultural Marketing Service has considered the economic impact of this action on small entities and prepared an analysis which was included in the Black Hills, South Dakota, termination order published September 6, 1996 (61 FR 47038). This action merely terminates the administrative provisions that were embodied, by reference, in § 1075.1 of the order. The market administrator, in his capacity as the orders liquidating agent, has completed the disbursement of all of the money remaining in the administrative, producer-settlement, and marketing service funds established under the order. Accordingly, the remaining provisions of the order are terminated.

Statement of Consideration

This rule terminates the remaining administrative provisions of the Black Hills, South Dakota, Federal milk order. Termination is favored by a majority of the producers engaged in the production of milk for sale in the marketing area in the representative period, determined to be June 1996, and such producers produced more than 50 percent of the milk produced for sale in the Black Hills, South Dakota, milk marketing area in such representative period. Section 608(c)(16)(B) of the Agricultural Marketing Agreement Act of 1937, as amended, requires that if a majority of the producers engaged in the production of milk for sale in the marketing area in a representative period determined by the Secretary favor termination of the order, and such producers produced more than 50 percent of the milk produced for sale in the marketing area in the representative period, that such order shall be terminated. Therefore, the provisions of the order, as amended, were terminated effective October 1, 1996 subject to specific exceptions. The termination order left intact certain administrative provisions that were embodied, by reference, in § 1075.1 of the order.

The market administrator, in his capacity as the order's liquidating agent, has completed the disbursement of all of the money remaining in the administrative, producer-settlement, and marketing service funds established under the order. Hence, the remaining provisions of the order should be terminated.

Therefore, the aforesaid provisions of § 1075.1 of the order are hereby terminated.

For good cause shown, this rule shall be effective December 31, 1996. Neither a comment period nor a 30-day effective date is provided in that all other provisions of the order were terminated effective October 1, 1996, and no parties are affected by this action.

List of Subjects in 7 CFR Part 1075

Milk marketing orders.

PART 1075–MILK IN THE BLACK HILLS, SOUTH DAKOTA MARKETING AREA—[REMOVED]

For the reasons set forth in the preamble and under the authority of 7 U.S.C. 601–674, 7 CFR part 1075 is removed.

Dated: December 19, 1996.

Michael V. Dunn,

Assistant Secretary, Marketing and Regulatory Programs.

[FR Doc. 96–32851 Filed 12–24–96; 8:45 am]

BILLING CODE 3410–02–P

Animal and Plant Health Inspection Service

9 CFR Part 77

[Docket No. 96–092–1]

Tuberculosis in Cattle and Bison; State Designation

AGENCY: Animal and Plant Health Inspection Service, USDA.

ACTION: Interim rule and request for comments.

SUMMARY: We are amending the tuberculosis regulations concerning the interstate movement of cattle and bison by raising the designation of Oklahoma from a modified accredited State to an accredited-free State. We have determined that Oklahoma meets the criteria for designation as an accredited-free State.

DATES: Interim rule effective December 26, 1996. Consideration will be given only to comments received on or before February 24, 1997.

ADDRESSES: Please send an original and three copies of your comments to Docket No. 96–092–1, Regulatory Analysis and Development, PPD, APHIS, suite 3C03, 4700 River Road Unit 118, Riverdale, MD 20737–1238. Please state that your comments refer to Docket No. 96–092–1. Comments received may be inspected at USDA, room 1141, South Building, 14th Street and Independence Avenue SW., Washington, DC, between 8 a.m. and 4:30 p.m., Monday through Friday, except holidays. Persons wishing to inspect comments are requested to call ahead on (202) 690–2817 to facilitate entry into the comment reading room.

FOR FURTHER INFORMATION CONTACT: Dr. Mitchell A. Essey, Senior Staff Veterinarian, National Animal Health Programs, VS, APHIS, 4700 River Road Unit 36, Riverdale, MD 20737–1231, (301) 734–7727; or e-mail: messey@aphis.usda.gov.

SUPPLEMENTARY INFORMATION:

Background

The ''Tuberculosis'' regulations, contained in 9 CFR part 77 (referred to below as ''the regulations''), regulate the interstate movement of cattle and bison because of tuberculosis. Bovine tuberculosis is the contagious, infectious, and communicable disease caused by *Mycobacterium bovis.* The requirements of the regulations concerning the interstate movement of cattle and bison not known to be affected with, or exposed to, tuberculosis are based on whether the cattle and bison are moved from jurisdictions designated as accredited-free States, modified accredited States, or nonmodified accredited States.

The criteria for determining the status of States (the term ''State'' is defined to mean any State, territory, the District of Columbia, or Puerto Rico) are contained in a document captioned Uniform Methods and Rules—Bovine Tuberculosis Eradication,'' which has been made part of the regulations via incorporation by reference. The status of States is based on the rate of tuberculosis infection present and the effectiveness of a tuberculosis eradication program. A State must have no findings of tuberculosis in any cattle or bison in the State for at least 5 years to be designated as an accredited-free State.

Before publication of this interim rule, Oklahoma was designated in § 77.1 of the regulations as a modified accredited State. However, Oklahoma now meets the requirements for designation as an accredited-free State. Therefore, we are amending the regulations by removing Oklahoma from the list of modified accredited States in § 77.1 and adding it to the list of accredited-free States in that section.

Immediate Action

The Administrator of the Animal and Plant Health Inspection Service has determined that there is good cause for publishing this interim rule without prior opportunity for public comment. Immediate action is warranted to change the regulations so that they accurately reflect the current tuberculosis status of Oklahoma as an accredited-free State. This will provide prospective cattle and bison buyers with accurate and up-to-date information, which may affect the marketability of cattle and bison since some prospective buyers prefer to buy cattle and bison from accredited-free States.

Because prior notice and other public procedures with respect to this action are impracticable and contrary to the public interest under these conditions, we find good cause under 5 U.S.C. 553 to make it effective upon publication in the Federal Register. We will consider comments that are received within 60 days of publication of this rule in the Federal Register. After the comment period closes, we will publish another document in the Federal Register. It will include a discussion of any comments we receive and any amendments we are making to the rule as a result of the comments.

Executive Order 12866 and Regulatory Flexibility Act

This rule has been reviewed under Executive Order 12866. For this action, the Office of Management and Budget has waived its review process required by Executive Order 12866.

Cattle and bison are moved interstate for slaughter, for use as breeding stock, or for feeding. Oklahoma has approximately 62,000 cattle herds with a combined total of 5,800,000 cattle. Approximately 95 percent of herd owners would be considered small businesses. Changing the status of Oklahoma may affect the marketability of cattle and bison from the State, since some prospective cattle and bison buyers prefer to buy cattle and bison from accredited-free States. This may result in some beneficial economic impact on some small entities. However, based on our experience in similar designations of other States, the impact should not be significant.

Under these circumstances, the Administrator of the Animal and Plant Health Inspection Service has determined that this action will not have a significant economic impact on a substantial number of small entities.

Executive Order 12372

This program/activity is listed in the Catalog of Federal Domestic Assistance under No. 10.025 and is subject to Executive Order 12372, which requires intergovernmental consultation with State and local officials. (See 7 CFR part 3015, subpart V.)

Executive Order 12988

This rule has been reviewed under Executive Order 12988, Civil Justice Reform. This rule: (1) Preempts all State and local laws and regulations that are in conflict with this rule; (2) has no retroactive effect; and (3) does not require administrative proceedings before parties may file suit in court challenging this rule.

Paperwork Reduction Act

This rule contains no information collection or recordkeeping requirements under the Paperwork Reduction Act of 1995 (44 U.S.C. 3501 *et seq.*).

List of Subjects in 9 CFR Part 77

Animal diseases, Bison, Cattle, Reporting and recordkeeping requirements, Transportation, Tuberculosis.

Accordingly, 9 CFR part 77 is amended as follows:

PART 77—TUBERCULOSIS

1. The authority citation for part 77 continues to read as follows:

Authority: 21 U.S.C. 111, 114, 114a, 115–117, 120, 121, 134b, and 134f; 7 CFR 2.22, 2.80, and 371.2(d).

§ 77.1 [Amended]

2. In § 77.1, in the definition for ''Modified accredited state'', paragraph (2) is amended by removing ''Oklahoma,''.

3. In § 77.1, in the definition for ''Accredited-free state'', paragraph (2) is amended by adding ''Oklahoma,'' immediately before ''Oregon,''.

Done in Washington, DC, this 16th day of December 1996.

A. Strating,

Acting Administrator, Animal and Plant Health Inspection Service.

[FR Doc. 96–32724 Filed 12–24–96; 8:45 am]

BILLING CODE 3410–34–P

---

9 CFR Part 113

[Docket No. 93–128–2]

Viruses, Serums, Toxins, and Analogous Products; Encephalomyelitis Vaccine, Eastern, Western, and Venezuelan, Killed Virus

AGENCY: Animal and Plant Health Inspection Service, USDA.

ACTION: Final rule.

SUMMARY: We are amending the standard requirement for Encephalomyelitis Vaccine, Eastern and Western, Killed Virus, by specifying requirements for killed Venezuelan equine encephalomyelitis vaccines and revising the standard potency test for Eastern and Western equine encephalomyelitis vaccines. The amendments require the use of Vero 76 cells in the test to evaluate the potency of Encephalomyelitis Vaccine, Eastern, Western, and Venezuelan, Killed Virus, and establish minimum antibody titers which must be elicited by each of the indicated fractions, as determined by a plaque reduction, serum neutralization assay in which Vero 76 cells are used.

EFFECTIVE DATE: January 27, 1997.

FOR FURTHER INFORMATION CONTACT: Dr. David A. Espeseth, Director, Licensing and Policy Development, Center for Veterinary Biologics, VS, APHIS, 4700 River Road Unit 148, Riverdale, MD 20737–1237, (301) 734–8245.

SUPPLEMENTARY INFORMATION:

Background

In accordance with the regulations in 9 CFR part 113, standard requirements are prescribed for the preparation of veterinary biological products. A standard requirement consists of specifications, procedures, and test methods that define the standards of purity, safety, potency, and efficacy for a veterinary biological product. Where a standard requirement for a product has not been established, production procedures and specifications for purity, safety, and potency of a biological product are provided in an Outline of Production filed with the Animal and Plant Health Inspection Service (APHIS).

On November 27, 1995, we published in the Federal Register (60 FR 58255–58256, Docket No. 93–128–1) a proposed rule to amend the regulations in § 113.207 by providing requirements for killed Venezuelan equine encephalomyelitis vaccines and amending the potency test provisions for killed Eastern and Western equine encephalomyelitis vaccines. The proposed amendments required the use of Vero 76 cells in the test to evaluate the potency of Encephalomyelitis Vaccine, Eastern, Western, and Venezuelan, Killed Virus and establish minimum antibody titers which must be elicited by each of the indicated fractions, as determined by a plaque reduction, serum neutralization assay in which Vero 76 cells are used.

We solicited comments concerning our proposal for 60 days ending January 26, 1996. We received two comments by that date from a manufacturer of veterinary biological products and a veterinary biologics industry consultant. They are discussed below.

One commenter expressed support for the rule provided adequate data are available to justify the proposed revisions. Adequate data are available to support the revisions. Antibody titers in guinea pigs, as measured by duck embryo fibroblasts, were correlated with protection in horses. Antibody titers in guinea pigs measured by Vero 76 cells were, in turn, correlated with those measured by duck embryo fibroblasts. Therefore, the Agency believes that there is justification for the proposed revisions. No changes to the regulations are made in response to this comment.

The other commenter, who claimed to have considerable experience with the plaque reduction, serum neutralization assay in which Vero cells are used, stated that ''less than 1:10'' rather than ''less than 1:4'' should be set as the acceptable titer for control guinea pigs in the tests for the Eastern and Western type fractions because nonspecific titers up to 1:10 are commonly encountered. In response to the commenter, the Agency notes that the correlative studies to support the rule were conducted with guinea pigs with prevaccination titers of less than 1:4. APHIS believes that extrapolation of the results of the studies to a situation where the sera of test animals prior to vaccination are negative at a 1:10 dilution but positive at a 1:4 dilution is inappropriate. No change to the regulations is made in response to this comment.

The second commenter also requested that, in proposed § 113.207(b)(4), ''three or four vaccinate serum samples'' instead of ''two or three vaccinate serum samples'' be specified to ''be consistent with the initial tests being satisfactory if 80 percent of the vaccinates show protective titers.'' In response to the commenter, APHIS notes that the proposed ''two or three vaccinate serum samples'' does not differ from the requirement specified under the current regulations. Moreover, paragraph (b)(6) of § 113.207 of the current regulations not proposed for amendment specifies that four or more failures is a basis for an unsatisfactory test, and that for a given fraction, at least 9 of the 10 vaccinated guinea pigs, or 90 percent, must have an acceptable titer for a satisfactory first-stage test. Therefore, ''three or four vaccinate serum samples'' and ''80 percent of the vaccinates show[ing] protective titers'' would be inconsistent with current regulations. No change to the regulations is made in response to this comment.

Therefore, based on the rationale set forth in the proposed rule and in this document, we are adopting the provisions of the proposed rule as a final rule without change.

Executive Order 12866 and Regulatory Flexibility Act

This rule has been reviewed under Executive Order 12866. The rule has been determined to be not significant for the purposes of Executive Order 12866 and, therefore, has not been reviewed by the Office of Management and Budget.

This rule revises the standard requirement in § 113.207 for Encephalomyelitis Vaccine, Eastern and Western, Killed Virus, by specifying a different cell type for use in the potency test assay and specifying different minimum specific antibody titers that must be achieved for a satisfactory test. In addition, the rule revises the standard requirement so that it would also apply to Encephalomyelitis Vaccine, Venezuelan, Killed Virus. The Agency believes the titers given in the standard requirement are adequately correlated with claimed efficacy and that they would be readily obtained by all relevant vaccines currently licensed. We do not expect any increase in cost to the biologics manufacturers affected by this rule. The changes should actually decrease costs for most impacted manufacturers, since fewer repeat tests will be needed and obtaining Vero 76 cells should prove less expensive than procuring primary DEF.

Under these circumstances, the Administrator of the Animal and Plant Health Inspection Service has determined that this action will not have a significant economic impact on a substantial number of small entities.

Executive Order 12372

This program/activity is listed in the Catalog of Federal Domestic Assistance under No. 10.025 and is subject to Executive Order 12372, which requires intergovernmental consultation with State and local officials. (See 7 CFR part 3015, subpart V.)

Executive Order 12988

This final rule has been reviewed under Executive Order 12988, Civil Justice Reform. It is not intended to have retroactive effect. This rule would not preempt any State or local laws, regulations, or policies, unless they present an irreconcilable conflict with this rule. There are no administrative procedures that must be exhausted prior to a judicial challenge to the provisions of this rule.

Paperwork Reduction Act

This rule contains no new information collection or recordkeeping requirements under the Paperwork Reduction Act of 1995 (44 U.S.C. 3501 *et seq.*).

List of Subjects in 9 CFR Part 113

Animal biologics, Exports, Imports, Reporting and recordkeeping requirements.

Accordingly, 9 CFR part 113 is amended as follows:

PART 113—STANDARD REQUIREMENTS

1. The authority citation for part 113 continues to read as follows:

Authority: 21 U.S.C. 151–159; 7 CFR 2.22, 2.80, and 371.2(d).

2. In § 113.207, the section heading, the introductory text, the introductory text of paragraph (b), and paragraphs (b)(2), (b)(3), (b)(4), and (b)(5) are revised to read as follows:

§ 113.207 Encephalomyelitis Vaccine, Eastern, Western, and Venezuelan, Killed Virus.

Encephalomyelitis Vaccine, Eastern, Western, and Venezuelan, Killed Virus, shall be prepared from virus-bearing cell culture fluids. Each serial or subserial shall meet the requirements prescribed in this section and the general requirements prescribed in § 113.200, except those in § 113.200(d). Any serial or subserial found unsatisfactory by a prescribed test shall not be released.

* * * * *

(b) *Potency test.* Bulk or final container samples of completed product from each serial shall be tested for potency in accordance with the two-stage test provided in this paragraph. For each fraction contained in the product—Eastern type, Western type, or Venezuelan type—the serological interpretations required in this test shall be made independently. A serial or subserial found unsatisfactory for any of the fractions shall not be released.

(1) * * *

(2) Fourteen to 21 days after the second injection, serum samples from each vaccinate and each control shall be tested by a plaque reduction, serum neutralization test using Vero 76 cells.

(3) If the control serum samples show a titer of 1:4 or greater for any fraction, the test is inconclusive for that fraction and may be repeated: *Provided,* That, if four or more of the vaccinate serum samples show a titer of less than 1:40 for the Eastern type fraction, less than 1:40 for the Western type fraction, or less than 1:4 for the Venezuelan type fraction, the serial or subserial is unsatisfactory without further testing.

(4) If two or three of the vaccinate serum samples show a titer of less than 1:40 for the Eastern type fraction, less than 1:40 for the Western type fraction, or less than 1:4 for the Venezuelan type fraction, the second stage of the test may be used for the relevant fraction(s): *Provided,* That, if a fraction is found acceptable by the first stage of the test, the second stage need not be conducted for that fraction.

(5) If the second stage is used and four or more of the vaccinate serum samples show a titer of less than 1:40 for the Eastern type fraction or the Western type fraction, or less than 1:4 for the Venezuelan type fraction, the serial or subserial is unsatisfactory.

* * * * *

Done in Washington, DC, this 16th day of December 1996.

A. Strating.

Acting Administrator, Animal and Plant Health Inspection Service.

[FR Doc. 96–32725 Filed 12–24–96; 8:45 am]

BILLING CODE 4310–12–P

DEPARTMENT OF HOUSING AND URBAN DEVELOPMENT

24 CFR Part 206

[Docket No. FR–2958–C–06]

RIN 2502–AF32

Home Equity Conversion Mortgage Insurance Demonstration: Additional Streamlining; Correction and Delay of Effective Date for the Definition of ''Principal Limit'' in § 206.3

AGENCY: Office of the Assistant Secretary for Housing-Federal Housing Commissioner, HUD.

ACTION: Final rule correction and delay of effective date.

SUMMARY: On September 17, 1996 (61 FR 49030), the Department issued a final rule to changes proposed on May 10, 1996, to the Home Equity Conversion Mortgage (HECM) Insurance Demonstration. The final rule had an effective date of October 17, 1996, except that the amendment to the definition of ''principal limit'' in § 206.3, had a delayed effective date of January 5, 1997. This document further delays the effective date of the definition of ''principal limit'' in § 206.3 until May 1, 1997. In addition, § 206.121(c) is corrected to remove language that should have been omitted which allowed HUD to change a monthly adjustable ARM to annual interest rate adjustments if assigned to HUD.

DATES: Effective date of this document: October 17, 1996.

Effective date for amended definition of ''principal limit'' in § 206.3 is delayed until May 1, 1997.

FOR FURTHER INFORMATION CONTACT: Richard K. Manuel, Director, Home Mortgage Insurance Division, Office of Insured Single Family Housing, Room number 9272, Department of Housing and Urban Development, 451 Seventh Street, SW., Washington, DC 20410, telephone (202) 708–2700; TTY (202) 708–4594. (These are not toll-free telephone numbers.)

SUPPLEMENTARY INFORMATION: The September 17, 1996 final rule delayed the effective date for the amendment to the definition of ''principal limit'' in § 206.3, until January 5, 1997. The Department recognized at that time that the Lockheed/Martin (CDSI) system would have to be changed to accommodate the new calculation. The Department now realizes that the change will not be completed by the January 5, 1997 effective date and by this notice delays further the effective date.

Accordingly, the effective date for the amendment to the definition of ''principal limit'' in § 206.3, as stated in the final rule published on September 17, 1996, at 61 FR 49030, is delayed until May 1, 1997.

The September 17, 1996 final rule inadvertantly failed to delete from § 206.121(c) the language allowing HUD to change a monthly adjustable ARM to annual interest rate adjustments if assigned to HUD. This language had been proposed in the May 10, 1996 proposed rule, at 61 FR 21918, and opposed by public comment. Therefore, in the preamble to the September 17, 1996 final rule, at 61 FR 49030, the Department agreed not to make the disputed language final.

Accordingly, in FR Doc. 96–23717, in the final rule published on September 17, 1996 (61 FR 49030), the first and second sentences in 24 CFR 206.121, are corrected as follows:

§ 206.121 Secretary authorized to make payments.

* * * * *

(c) *Second mortgage.* If the contract of insurance is terminated as provided in § 206.133(c), all payments to the mortgagor by the Secretary will be secured by the second mortgage, if any. Payments will be due and payable in the same manner as under the insured first mortgage. * * *

* * * * *

Dated: December 19, 1996.

Nicolas P. Retsinas,

Assistant Secretary for Housing—Federal Housing Commissioner.

[FR Doc. 96–32769 Filed 12–24–96; 8:45 am]

BILLING CODE 4210–27–P

DEPARTMENT OF THE INTERIOR

Office of the Special Trustee for American Indians

25 CFR Chapter VII and Part 1200

RIN 1035–AAOO

The American Indian Trust Fund Management Reform Act of 1994

AGENCY: Office of the Special Trustee for American Indians, Interior.

ACTION: Final rule.

SUMMARY: The Office of Special Trustee for American Indians (OST) in the Office of the Secretary of the Interior is promulgating this regulation to implement Title II of Public Law 103–412, the American Indian Trust Fund Management Reform Act of 1994 (the Act). The Act, for the first time, permits American Indian tribes to take tribal funds out of trust status with the Department of the Interior (DOI). The purpose of the Act is to enable tribes to manage the funds by themselves, or with the help of capable commercial fund managers. The regulation affects tribal funds only, not Individual Indian Monies (IIM) funds.

EFFECTIVE DATE: These regulations take effect on January 27, 1997.

SUPPLEMENTARY INFORMATION: 25 CFR Part 1200 in chapter VII contains provisions which affect 240 tribes with trust funds. These tribes currently have approximately $1.5 billion in judgments, settlements, awards, and associated earnings held in trust status by the Department of the Interior. Key concepts of the regulation are as follows: (a) Tribes wishing to withdraw some or all of their tribal funds under the Act (not IIM funds) must present a tribal resolution acknowledging that when funds leave the U.S. Treasury, the federal government has no further liability relating to those funds; (b) tribes must also present a management plan for Secretarial approval, detailing how the funds will be managed once they are out of trust, including a protection against a significant loss of principal; (c) if the funds are not managed by the tribes, they are to be managed by capable investment managers or investment firms with proof of liability insurance; (d) tribes must provide notification to tribal members regarding their intent to withdraw funds from trust; (e) tribes may return any or all of their funds withdrawn under this act, including any earnings, to trust status; (f) tribes may request technical assistance and/or grants from the Department in order to develop the management plan. The ability to take funds from trust creates new tribal opportunities for investment of funds and for economic development; therefore, establishment of the regulation has a high priority in Indian Country.

Summary of Regulation and Comment Received

In accordance with the Act, this regulation was developed with the active participation of tribal representatives. The policy of the Department is, whenever practical, to afford the public an opportunity to participate in the rulemaking process. A Regulatory Workgroup was established by the Office of Trust Funds Management (OTFM), which had tribal representation, as well as representation from the InterTribal Monitoring Association (ITMA), Departmental Office of the Solicitor (SOL), and Bureau of Indian Affairs (BIA). Also in furtherance of tribal participation, draft regulations were sent to all tribes with trust funds in August, 1995; a formal presentation was made by OTFM at a National Tribal Consultation in September, 1995. The consultation session was announced in the Federal Register and was open to the public. Comments which were incorporated from this consultation are as follows: (a) A specific provision for notifying the tribal membership of an intent to remove funds was included based on comments by the Delaware Tribe of Oklahoma; (b) the ''certification'' by tribe's legal counsel of authority of tribal government to withdraw funds was changed to a requirement for a ''legal opinion'' to be included in the application package based on comments from both the Hopi and Cheyenne River Tribes; (c) a requirement to provide a copy of audit or investment report when requesting to withdraw additional funds was included based on comments from the First Nations Development Institute; (d) a requirement for liability insurance of tribal officials was added based on a suggestion from the Skokomish Tribe of Washington State. Other changes were made, such as changing the approving official to the Secretary, Department of the Interior, from the Commissioner of Indian Affairs, Bureau of Indian Affairs; removing duplicative language from the policy statement; adding clarifying language regarding applicability of these regulations to ''proceeds of labor'' funds; and requiring tribes to submit copies of applicable distribution plans or settlement acts when making application to withdraw funds. The regulation was also rewritten in a ''user-friendly'' format after the consultation.

On February 9, 1996, the OTFM was moved from the BIA to the OST by Secretarial Order Number 3197. This action was taken to implement Title III of the Act which established the Office of the Special Trustee for American Indians. The Director, OTFM, reports directly to the Special Trustee.

The Department published a Notice of Proposed Rulemaking in the Federal Register as part 144 in Chapter I of 25 CFR on May 16, 1996, on page 24731, with a 60-day open comment period. This final rule is being published as new part 1200 in the newly established chapter VII of 25 CFR, which is reserved for rules published by the Office of the Special Trustee.

Only one formal comment was received on the proposed rule. An Oklahoma City law firm commented that in discussions with representatives of three tribes, concerns had been expressed relating to the ability of tribes

to use withdrawn funds for economic development purposes as part of an overall business plan. The firm was not authorized to comment directly for the tribes, but recommended modifying § 144.14 to clarify the use of funds withdrawn from trust to obtain financing for economic development purposes. The Act does not address economic development activities as a part of a tribe's plan for management of their withdrawn trust funds. After review, it is felt that an attempt to include a discussion of ''economic development purposes'' in the regulations is not necessary. The Secretary is tasked with determining if a tribes' plan is ''reasonable,'' has adequate protection against a ''significant loss of principal,'' and will allow the tribe to follow the dictates of any approved distribution plan for judgment or settlement awards. Each tribal plan will be evaluated by the Secretary on its own merits based on the criteria listed in the regulation.

Administrative Matters

The Department has determined that this rulemaking will not have a significant economic effect on a substantial number of small entities under the Regulatory Flexibility Act (5 U.S.C. 601 *et seq.*).

The Department certifies that the rule does not represent a governmental action capable of interference with constitutionally protected property rights. Thus, a Takings Implication Assessment need not be prepared under Executive Order 12630, ''Government Action and Interference with Constitutionally Protected Property Rights.''

The Department has certified to the Office of Management and Budget that this rule meets the applicable standards provided in Sections 3(a) and 3(b)(2) of Executive Order 12998.

This document has been reviewed under Executive Order 12866 and is not a significant regulatory action.

The Department has determined that this rule does not constitute a major Federal action significantly affecting the quality of the human environment and that no detailed statement is required under the National Environmental Policy Act of 1969.

Paperwork Reduction Act of 1995

The Office of Management and Budget (OMB) has approved, under 44 U.S.C. chapter 35, the information collection requirements in Subpart B (Application to Withdraw Tribal Funds from Trust Status) under control number 1035–0001. The information for this Subpart is being collected and used by the OST to determine applicant eligibility, evaluate applicant capabilities, protect the service population, safeguard tribal trust funds, and permit the OST to evaluate capability of tribes or their contractors to manage and invest large blocks of funds.

The OMB has approved under 44 U.S.C. chapter 35, information collection requirements in Subpart D (Applications for Technical Assistance to Withdraw Tribal Funds from Trust Status—General and Specific Budget) under control number(s) 1035–0002 and 1035–0003. The information for this Subpart is being collected and used by the OST to determine applicant eligibility, as well as the level of need for technical assistance in order for tribes to develop the Management Plans and to complete the application for withdrawal process. This is in accordance with statutory authority which requires the Secretary to provide technical assistance for tribes to complete the required Management Plan. This information will be collected once only from each applicant.

The OST estimates that the average burden of complying with the collection, broken down by Subpart, will be as follows: Subpart B (Application to Withdraw Tribal Funds from Trust Status), 342 hours; Subpart D (Applications for Technical Assistance to Withdraw Tribal Funds from Trust Status) General form, 13 hours; Specific Budget form, 39 hours.

Responses to the collection of information under this regulation are required in order for Indian tribes to obtain or retain benefits under the Act. However, not every tribe will need to respond to each request for information contained in the regulation, as some of the requests pertain to specific situations (requests for technical assistance). Any disagreements over application approvals are subject to the criteria and procedures in § 1200.21 of the regulation.

With regards to confidentiality, an Indian tribe is not protected under the Privacy Act. However, in accordance with DOI, OST, BIA and OTFM policy, tribes are accorded confidentiality with regard to trust fund account matters. Tribal information provided will not be shared with anyone outside the Department without permission from the tribe.

The Department may not collect information, nor are Indian tribes or other persons required to respond to such collections unless the collection displays a currently valid OMB control number.

List of Subjects in 25 CFR Part 1200

Indians, Indian tribal trust funds, Indian trust responsibility, Tribal funds withdrawal.

For the reasons given in the preamble, the Department of the Interior establishes a new chapter VII consisting of part 1200 in Title 25 of the Code of Federal Regulations as set forth below.

CHAPTER VII—OFFICE OF THE SPECIAL TRUSTEE FOR AMERICAN INDIANS, DEPARTMENT OF THE INTERIOR

PART 1200—AMERICAN INDIAN TRUST FUND MANAGEMENT REFORM ACT

Subpart A—General Provisions

Sec.
1200.1 Purpose of this regulation.
1200.2 Definitions.
1200.3 What is the Department's policy on tribal management of trust funds?
1200.4 May tribes exercise increased direction over their trust funds and retain the protections of Federal trust status?
1200.5 What are the advantages and disadvantages of managing trust funds under the options in § 1200.4?
1200.6 Do these regulations tell tribes how to receive future income directly rather than have the government continue to collect it?
1200.7 Information collection.

Subpart B—Withdrawing Tribal Funds From Trust

1200.10 Who is eligible to withdraw their tribal funds from trust?
1200.11 What funds may be withdrawn?
1200.12 What limitations and restrictions apply to withdrawn funds?
1200.13 How does a tribe apply to withdraw funds?
1200.14 What must the Tribal Management Plan contain?
1200.15 What is the approval process for management plans?
1200.16 What criteria will be used in evaluating the management plan?
1200.17 What special criteria will be used to evaluate management plans for judgment or settlement funds?
1200.18 When does the Department's trust responsibility end?
1200.19 How can the plan be revised?
1200.20 How can a tribe withdraw additional funds?
1200.21 How may a tribe appeal denials under this part?

Subpart C—Returning Tribal Funds to Trust

1200.30 How does a tribe notify the Department if it wishes to return withdrawn funds to Federal trust status?
1200.31 What part of withdrawn funds can be returned to trust?
1200.32 How often can funds be returned?
1200.33 How can funds be returned?
1200.34 Can a tribe withdraw redeposited funds?

Subpart D—Technical Assistance

1200.40 How will the Department provide technical assistance for tribes?
1200.41 What types of technical assistance are available?
1200.42 Who can provide technical assistance?
1200.43. How can a tribe apply for technical assistance?
1200.44 What action will the Department take on requests for technical assistance?

Authority: 25 U.S.C. 4001.

Subpart A—General Provisions

§ 1200.1 Purpose of this regulation.

This part describes the processes by which Indian tribes can manage tribal funds currently held in trust by the United States. It defines how tribes may withdraw their funds from trust status; how they may return funds to trust; and how they may request technical assistance or grants to help prepare plans to manage funds or to ensure the capability to manage those funds.

§ 1200.2 Definitions.

As used in this part:

Act means the American Indian Trust Fund Management Reform Act of 1994 (Pub. L. 103–412, 108 Stat. 4239, 25 U.S.C. 4001).

Agency Superintendent means the official in charge of a Bureau of Indian Affairs Agency.

Area Director means the official in charge of a Bureau of Indian Affairs area office.

Bureau or *BIA* means the Bureau of Indian Affairs, Department of the Interior.

Department or *DOI* means the Department of the Interior.

General Counsel means the attorney for the tribe.

OST means the Office of the Special Trustee for American Indians, Department of the Interior.

OTFM means the Office of Trust Funds Management, Department of the Interior.

Resolution means the formal manner in which a tribal government expresses its legislative will.

Secretary means the Secretary of the Interior or his/her designee.

Solicitor means the Office of the Solicitor, Department of the Interior.

Special Trustee means the Special Trustee for American Indians appointed under Title III of the Act.

Tribal council means the elected or appointed governing officials of any tribe which is recognized by the Secretary.

Tribe means any Indian tribe, band, nation, rancheria, pueblo, colony or community, including any Alaska Native village or regional or village corporation as defined or established pursuant to the Alaska Native Claims Settlement Act which is federally recognized by the U.S. Government for special programs and services provided by the Secretary to Indians because of their status as Indians. For this purpose, it also means two or more tribes joined for any purpose, the joint assets of which include funds held in trust by the Secretary. An example of this would be the KCA (consisting of the Kiowa, Comanche and Apache Tribes).

Us means the Department of the Interior, i.e., the Secretary of the Interior or his/her designee.

We means the Department of the Interior, i.e., the Secretary of the Interior or his/her designee.

§ 1200.3 What is the Department's policy on tribal management of trust funds?

(a) We will give tribes as much responsibility as they desire for the management of their tribal funds that we currently hold in trust.

(b) Title II of the American Indian Trust Fund Management Reform Act, implemented by these regulations, offers tribes one approach for assuming increased management of their funds that we now hold in trust and administer. Under Title II, a tribe may completely remove its funds from Federal trust status and manage them as it wishes, subject to the requirements and conditions in this part. When a tribe withdraws its funds under this part, it may invest those funds in equities or other investment vehicles that are statutorily unavailable to us.

§ 1200.4 May tribes exercise increased direction over their trust funds and retain the protections of Federal trust status?

Yes. The Tribal Self-Governance Act (25 U.S.C. 458) and the Indian Self-Determination and Education Assistance Act (25 U.S.C. 450 et. seq.) provide other options for trust funds management. A tribe may choose to manage its trust funds under the provisions of these Acts if it wishes. These options are covered by 25 CFR part 900 (the ''Indian Self-Determination and Education Assistance Act Program'') and 25 CFR part 1000 (the ''Self-Governance Program'').

§ 1200.5 What are the advantages and disadvantages of managing trust funds under the options in § 1200.4?

Under these other options, the funds remain in Federal trust status and the tribe can exercise a range of control over their management. However, the tribe has fewer investment options than it has when it withdraws its funds completely from trust status. If a tribe chooses to keep its funds in trust status, the tribe is subject to the same statutory investment restrictions that bind us. That means that the tribe's investments are limited to bank deposits and securities guaranteed by the United States. (See 25 U.S.C. 162a for specific statutory investment restrictions.)

§ 1200.6 Do these regulations tell tribes how to receive future income directly rather than have the government continue to collect it?

No. These regulations apply only to the withdrawal of funds which are in trust. Some of these funds come from the sale or lease of trust resources. Even if a tribe withdraws its funds, we will collect and manage future income. If a tribe wishes to receive future income directly, it should contact the OST/OTFM staff at its agency or area office to find out how to do this.

§ 1200.7 Information collection.

The information collection requirements contained in subpart B of this part, Application to Withdraw Tribal Funds from Trust Status and subpart D of this part, Application to Withdraw Tribal Funds from Trust Status-General and Specific Budget Technical Assistance, have been approved by the Office of Management and Budget under 44 U.S.C. 3507 *et seq.* and assigned clearance numbers 1035–001 (subpart B), and 1035–002 and 1035–003 (subpart D). Information collected in § 1200.13, (How does a tribe apply to withdraw funds?) will be used to determine the eligibility of applicants, and the capability of tribes or their contractors to manage and invest large blocks of funds. Information collected in § 1200.43, (How can a tribe apply for technical assistance?) will be used to determine the eligibility of applicants, as well as the level of need for technical assistance, in order for tribes to develop Management Plans and to complete the application for withdrawal process.

Subpart B—Withdrawing Tribal Funds From Trust

§ 1200.10 Who is eligible to withdraw their tribal funds from trust?

Any tribe for whom we manage funds in trust.

§ 1200.11 What funds may be withdrawn?

A tribe may withdraw some or all funds that we hold in trust if we approve a plan that it submits under this part.

§ 1200.12 What limitations and restrictions apply to withdrawn funds?

(a) A tribe may withdraw funds appropriated to satisfy judgments of the

Indian Claims Commission (ICC) and the Court of Federal Claims and that we hold under the Indian Judgment Funds Use and Distributions Act (25 U.S.C. 1401) or another act of Congress if:

(1) The tribe uses the funds as specified in the previously approved judgment fund plan, and;

(2) The tribe withdraws only funds held for Indian tribes and does not include any funds held for individual tribal members.

(b) A tribe may withdraw funds appropriated to satisfy settlement agreements relating to certain tribal claims and that we hold and manage for the tribe pursuant to an act of Congress if:

(1) The tribe uses the funds as specified in the previously approved settlement act plan;

(2) The tribe withdraws only funds held for Indian tribes and does not include any funds held for individual tribal members; and

(3) It is determined that there is no provision in the act or settlement agreement requiring that the funds remain in trust to implement the act or agreement that cannot be waived.

(c) Tribal funds commonly known as ‘‘ Proceeds of Labor’’ funds, usually income to trust resources, are generally withdrawn under normal tribal budgeting procedures, but may also be withdrawn from trust under this part. These funds may be returned to trust under the provisions of subpart C of this part.

§ 1200.13 How does a tribe apply to withdraw funds?

The tribe must submit four copies of its application and the attachments listed below to: Director, Office of Trust Funds Management, Department of the Interior, 505 Marquette NW, Suite 1000, Albuquerque, NM 87102. We will notify the tribe if the application is incomplete and will help the tribe complete the application if requested. When we determine that the application is complete, we will send copies to the appropriate agency superintendent and area director, the Special Trustee and the Solicitor. Each application package must contain the items listed below.

(a) Proof that the tribe has notified its members of its intent to remove funds from trust and that, when the request is approved, the tribe and not the United States Government will be liable for funds management. Notification must be by the method(s) that the tribe customarily uses to notify its members of significant tribal actions. The notification must identify the specific funds to be withdrawn.

(b) A tribal resolution that:

(1) Expressly authorizes the withdrawal of the funds and indicates the (approximate) dollar amount of the funds to be withdrawn;

(2) Expressly acknowledges that the funds, once withdrawn in accordance with the Act, will no longer be held in trust status by the United States, and that we have no further liability or responsibility for the funds; and

(3) Acknowledges that:

(i) Neither we nor the tribe necessarily accept the account balances at the time of withdrawal as accurate; and

(ii) Neither we nor the tribe have waived any rights regarding the balances, including the right to seek compensation for incorrect balances.

(c) A copy of a formal agreement between the tribe and the manager of the funds to be withdrawn, in which the manager agrees to:

(1) Comply with the terms of the plan we approve under § 1200.15 and make only those changes that conform to revision procedures in the approved plan and the requirements of § 1200.19; and

(2) Transfer funds to the tribe or another manager only after receiving a valid tribal resolution calling for this transfer and proof that the tribe has notified its members of intent to transfer the funds. The resolution must clearly state that:

(i) The funds are being withdrawn to be reinvested by the tribe in a manner consistent with the goals and strategies of the approved plan; and

(ii) The fund managers will continue to follow any previously approved distribution plan conditions.

(d) A legal opinion by the tribe’s attorney or its general counsel that:

(1) The resolution referred to in paragraph (b) of this section was enacted under procedures established by the tribe’s organic documents or oral tradition;

(2) The tribal governing body has the legal authority to withdraw funds from trust status and that the withdrawal does not require a referendum vote or other procedure beyond a tribal council resolution; and

(3) If the funds to be withdrawn are judgment or settlement funds, that the tribe’s plan for managing the funds meets the requirements of any applicable judgment fund use and distribution plan or settlement act.

(e) The results of a tribal referendum, if one was held.

(f) If the funds to be withdrawn are judgment or settlement funds, a copy of the act and/or plan that sets out the conditions for the uses of the funds or income from them.

(g) A management plan as provided for in § 1200.14.

§ 1200.14 What must the Tribal Management Plan contain?

The Tribal Management Plan required by § 1200.13 must include each of the following:

(a) Tribal investment goals and the strategy for achieving them.

(b) A description of the protection against the substantial loss of principal, as set forth in § 1200.16.

(c) A copy of the tribe’s ordinances and procedures for managing or overseeing the management of the funds to be withdrawn. These must include adequate protections against fraud, abuse, and violations of the management plan.

(d) A description of the tribe’s previous experience managing or overseeing the management of invested funds. This should include factual data of past performance of tribally-managed funds (i.e., audited reports) and the identity and qualifications of the tribe’s investment officer.

(e) A description of the capability of all of the individuals or investment institutions that will be involved in managing and investing the funds for the tribe. Provide copies of State or Federal security applications for account executive(s).

(1) Investment entities named must submit:

(i) Ownership information (including Central Registry Depository (CRD) numbers);

(ii) Asset size and capitalization;

(iii) Assets under management;

(iv) Performance statistics on managed accounts for the past 5 years; and

(v) Any adverse actions by licensing and/or regulatory bodies within the past 5 years.

(2) In addition, we may ask about:

(i) Soft dollar arrangements;

(ii) Affiliation with broker dealers, banks, insurance and/or investment companies;

(iii) Research done in house;

(iv) Recent changes in active portfolio managers; and

(v) Any other information necessary to make an adequate evaluation of the proposed plan.

(f) A description of how the plan will ensure that the fund manager will comply with any conditions established in judgment fund plans or settlement acts.

(g) Proof of liability insurance of the investment firm.

(h) Proof of liability insurance that protects against fraud for those Tribal Council members with authority to disburse funds. In many tribes the chairperson, and the comptroller and/or the tribal treasurer, for example, would be the positions having this authority.

(i) A plan for custodianship of investment securities that includes:

(1) Name of persons in the tribe who can direct the custodian;

(2) Name of the custodian;

(3) Copy of intended custodian agreement;

(4) Size of custodian operation;

(5) Disclosure of any security lending provisions; and

(6) Insurance coverage.

(j) A tribal council agreement to provide an annual audit and report on performance of withdrawn funds to the tribal membership, with a copy to: Office of the Special Trustee for American Indians, Department of the Interior, MS–5140, 1849 C Street NW, Washington, DC, 20240. This agreement must include:

(1) A statement that the copy to the Special Trustee is for information only, and infers no liability on our part regarding the audit results, nor does it infer a requirement for us to take any action whatsoever; and

(2) A description of the steps (including audit performance and reporting) the tribe will take to ensure its membership that the tribe is continuing to comply with the terms of the plan submitted and approved pursuant to judgment fund limitations (if any) and/or the terms of the Act.

(k) The proposed date for transfer of funds.

(l) A statement as to whether the tribe chooses to receive the withdrawal as a cash balance transfer, as a transfer of marketable investments that we own for the tribe, or as a combination of the two.

(1) A cash balance transfer may require us to sell bonds, notes, or other investments that we purchased when investing the tribe's monies.

(2) We cannot transfer non-marketable securities to a tribe. We can only purchase and hold them and must sell them back to the U.S. Treasury.

(3) If we sell a tribe's security at a loss (i.e., when market value is less than book value or carrying value) we will first notify the tribe. The tribe must instruct us to proceed with the sale and must agree not to hold us responsible for the loss before we will make the sale.

(4) If the tribe asks us to transfer marketable securities, upon proper instructions from the new tribal custodian, we will order our custodian to physically transfer the proper security to the new custodian on the agreed upon date.

(m) Agreement that judgment award funds will have segregated accounts.

(n) A description of the procedures for amending or revising the plan.

§ 1200.15 What is the approval process for management plans?

The Secretary will approve or disapprove each management plan, based in part upon our recommendation.

(a) We will determine the completeness of the application, provide for adequate professional review of the application and the management plan, and provide technical assistance as necessary to make an application complete.

(b) We will coordinate with area directors in confirming authority of tribal governments to make requests.

(c) We will approve or disapprove a request within 90 calendar days of receiving a completed application. This 90-day period does not include time that we spend awaiting a response from the tribe for additional information that we have requested. All determinations will be in writing, and all responses will be by certified mail.

(d) If we find that a plan does not meet the criteria in § 1200.16, we will notify the tribe of shortcomings of the request, and allow the tribe to respond before recommending formal disapproval.

(e) Before final approval, we will reach agreement with the tribe on how many days after final approval we will transfer the funds. We will transfer the funds as soon after final approval as the tribe or manager is ready to receive them, unless we need additional time to sell existing instruments.

§ 1200.16 What criteria will be used in evaluating the management plan?

Each plan must be approved by the appropriate tribal governing body, and must be accompanied by a resolution approving the plan. The plan must be reasonable in light of the trust responsibility and the principles of Indian self-determination, and other appropriate factors, including, but not limited to, the factors listed below:

(a) We will evaluate the individuals or entities that will manage the funds to be withdrawn, or that will advise the tribe on investing the funds to be withdrawn in order to determine if they have the capability and experience to manage the funds. Among the elements we will evaluate are: the number of years in business, the performance record for funds management, and the ability to compensate the tribe if the entity is found liable for failing to comply with the tribe's management plan (i.e., its assets, bonding, and insurance).

(b) We will review the tribe's experience in managing investments. We will compare this experience to the complexity of the proposed management plan to determine whether the tribe has the experience to manage its proposed plan or whether it should begin with a less complex approach.

(c) We will evaluate the tribe's internal audit and control systems for overseeing or monitoring its investment activity.

(d) We will evaluate the adequacy of protection against substantial loss of principal. Our determination will include a thorough evaluation of the tribe's investment plan including:

(1) The goals and objectives;

(2) The proposed uses of the fund in order to meet business objectives;

(3) The size and diversity of the investment portfolio (for example, the class of stocks and the mixture of types of investments);

(4) The financial condition of the tribe;

(5) The inherent riskiness of the proposed investments; and

(6) The tribe's projected need and proposed timeframes to draw down the funds being invested or the income from them.

(e) We will determine the likelihood that the plan will be followed. We will base this determination on the contents of the agreement between the tribe and the fund manager and other appropriate factors.

§ 1200.17 What special criteria will be used to evaluate management plans for judgment or settlement funds?

For judgment or settlement funds, in addition to the criteria in § 1200.16, we will determine if the plan adequately provides for compliance with any conditions, uses of funds, or other requirements established by the appropriate judgment fund plan or settlement act.

§ 1200.18 When does the Department's trust responsibility end?

Our trust responsibility for funds withdrawn under this part ends on the date that the funds are withdrawn. However at the time of withdrawal neither we nor the tribe may be deemed to have accepted the account balance at the time of withdrawal as accurate; or waived any rights regarding the balance and our ability to seek compensation.

§ 1200.19 How can the plan be revised?

Once a tribe has withdrawn its funds, the tribe may revise its plan without our approval. All revisions should conform to the procedures outlined in the approved management plan. The tribe should inform its members of all revisions to a plan through normal tribal procedures before the revisions are implemented.

§ 1200.20 How can a tribe withdraw additional funds?

(a) If a tribe has withdrawn funds under an approved tribal management plan and wishes to withdraw additional funds that will be managed under the same plan, it need not submit a complete new application. The tribe must:

(1) Notify us of the additional amount it intends to withdraw and whether the funds to be withdrawn are in kind or cash. (Written notification should be provided to our address in § 1200.13);

(2) Send us a tribal resolution approving the new withdrawal and certifying that the funds are being withdrawn subject to the same conditions and that they will be managed under the plan in the original approved application;

(3) Send us a copy of the most recent compliance audit or investment report.

(b) After we finish our review we will release the additional funds, unless the compliance audit or investment report indicates that the tribe is not complying with its management plan. In this case, we will not release the additional funds until the tribe demonstrates that it is complying with the management plan.

§ 1200.21 How may a tribe appeal denials under this part?

If we deny a request or do not approve an application within 90 days of a request, the tribe may address any problems that we identify and resubmit a revised request, seek technical assistance, or appeal the denial under 43 CFR Part 4.

Subpart C—Returning Tribal Funds to Trust

§ 1200.30 How does a tribe notify the Department if it wishes to return withdrawn funds to Federal trust status?

If a tribe elects to return some or all of the funds it has withdrawn from Federal trust status pursuant to this Act, it must first notify us in writing at our address in § 1200.13. This notification must provide a proposed date for the return of the funds, as well as the amount of funds to be returned, or actual securities to be delivered to the appropriate custodian.

§ 1200.31 What part of withdrawn funds can be returned to trust?

A tribe may return all or a portion of the principal which was removed from trust under this Act along with earnings and profits. We will verify the amount declared for earnings before we accept a return. We will accept any amount less than the original principal amount as a principal amount.

§ 1200.32 How often can funds be returned?

Tribes may return all or part of withdrawn funds no more than twice a year, beginning no sooner than six months after date of withdrawal, except with approval of the Secretary.

§ 1200.33 How can funds be returned?

Funds may be returned either as cash or securities, which meet the requirements for investments in 25 U.S.C. 162a. Cash can be transferred to the US Treasury by Electronic Funds Transfers (EFT), or the Automated Clearing House (ACH) process. Tribes must coordinate the transfer of ownership in securities with us to ensure proper credit to the tribe. The securities must meet investment restrictions contained in 25 U.S.C. 162a.

§ 1200.34 Can a tribe withdraw redeposited funds?

Yes. If a tribe wishes to withdraw redeposited funds from Federal trust status, it must submit a written request to do so, accompanied by a new resolution and any revisions it wishes to make in its original management plan.

Subpart D—Technical Assistance

§ 1200.40 How will the Department provide technical assistance for tribes?

(a) We will provide direct or contract technical assistance, in accordance with appropriations availability to tribes for developing, implementing, and managing Indian trust fund investment plans. We will ensure that our legal, financial and other expertise is made fully available to advise tribes in developing, implementing, and managing investment plans.

(b) We may award grants to tribes for developing and implementing plans for investing Indian tribal trust funds.

(c) Tribes may also obtain technical assistance on their own.

§ 1200.41 What types of technical assistance are available?

The types of technical assistance include: investment planning; accounting; selection of investment managers; monitoring of investments; asset management; or other assistance appropriate to support funds withdrawal.

§ 1200.42 Who can provide technical assistance?

A sample of competent providers includes any of the following entities with the appropriate skills and capabilities: available DOI or OST staff; intertribal organizations; public agencies; and contracted private investment firms.

§ 1200.43 How can a tribe apply for technical assistance?

(a) Tribes wishing technical assistance may request it by sending us a letter along with a tribal resolution outlining the technical assistance required, tribal resources which may be applied to the need, and suggested provider, if known. The resolution must state clearly that the assistance is needed for developing, implementing, or managing an investment plan under the provisions of this authority.

(b) Tribes requesting funds for technical assistance must send a completed SF–424, APPLICATION FOR FEDERAL ASSISTANCE, and SF–424A, BUDGET INFORMATION, along with a tribal resolution, detailing the assistance specifically requested, and the suggested provider to our address in § 1200.13.

(c) We will make grants subject to funds availability. We will publish a notice in the Federal Register concerning the availability of funding, deadlines for grants, the application process, and approval criteria. If funding is limited, grants will be awarded based on criteria that we feel will best meet the intent of the Act. We will consult with tribes in determining annual criteria. Unsolicited grant requests will not be accepted.

§ 1200.44 What action will the Department take on requests for technical assistance?

We will respond in writing to all requests for technical assistance and grants, advising of decision, availability of appropriate expertise and funding, and anticipated delivery of the service.

Dated: December 19, 1996.

Ada E. Deer,

Assistant Secretary—Indian Affairs.

[FR Doc. 96–32738 Filed 12–24–96; 8:45 am]

BILLING CODE 4310–12–P

DEPARTMENT OF THE TREASURY

Internal Revenue Service

26 CFR Part 1

[TD 8707]

RIN 1545–AT19

Distribution of Marketable Securities by a Partnership

AGENCY: Internal Revenue Service (IRS), Treasury.

ACTION: Final regulations.

SUMMARY: This document contains final regulations providing rules for partnership distributions of marketable securities under section 731(c) of the

Internal Revenue Code of 1986, as amended, and for determining when those distributions are taxable to the distributee partner. The regulations reflect changes to the law made by the Uruguay Round Agreements Act enacted on December 8, 1994.

DATES: These regulations are effective on December 26, 1996.

FOR FURTHER INFORMATION CONTACT: Terri A. Belanger or William M. Kostak at (202) 622–3080 (not a toll-free number).

SUPPLEMENTARY INFORMATION:

Background

This document amends 26 CFR part 1 to provide rules relating to the treatment of partnership distributions of marketable securities under section 731(c). Under section 731(a), in the case of a distribution by a partnership to a partner, gain is recognized to the partner only to the extent that any money distributed exceeds the adjusted basis of the partner's interest in the partnership. Prior to the enactment of section 731(c), marketable securities were not considered money and, therefore, the distribution of marketable securities by a partnership to a partner was not a taxable event. Section 731(c) now treats a partnership distribution of marketable securities as a distribution of money and as a taxable event if the value of the distributed securities exceeds the adjusted basis of the partner's interest in the partnership. Section 731(c) also provides several exceptions to the general rule that a distribution of marketable securities will be treated as a distribution of money.

On January 2, 1996, the IRS published in the Federal Register (61 FR 28) a notice of proposed rulemaking (PS–2–95) to provide guidance regarding section 731(c). A number of public comments were received concerning the proposed regulations. However, the public hearing scheduled for April 3, 1996, was cancelled because no one requested to speak. After consideration of the written comments received, the proposed regulations are adopted as revised by this Treasury decision.

Explanation of Provisions

I. General Background

The proposed regulations provide rules for determining when and the extent to which a distribution of marketable securities by a partnership to a partner will be treated as a distribution of money for purposes of section 731(a). Although modified in response to comments, the final regulations generally adopt the rules contained in the proposed regulations.

II. Public Comments

Several comments requested that the IRS reconsider the requirement in § 1.731–2(d) (2)(ii) of the proposed regulations that a marketable security must be actively traded on the date of distribution to qualify for the ''nonrecognition transaction'' exception to section 731(c). Because of this rule, financial instruments (securities) that are treated as marketable securities under section 731(c)(2)(B) on the date of distribution, but that are not actively traded, would not qualify for this exception. Commentators suggested that the final regulations should not include this requirement or should include a more narrowly drafted provision. In response to these comments, the final regulations provide that a security that falls within the definition of marketable security may qualify for the exceptions under § 1.731–2(d) of the final regulations even if the security is not actively traded on the date of distribution. An anti-stuffing rule has been added to address the concern to which the actively-traded requirement of the proposed regulations was directed.

Several comments also suggested that § 1.731–2(d)(2) of the proposed regulations should allow a de minimis amount of cash and marketable securities to be transferred in a nonrecognition transaction. The final regulations provide that if the value of money and marketable securities transferred in a nonrecognition transaction is less than 20 percent of the total amount of all property transferred in exchange for the distributed security, the entire value of the distributed security will qualify for the nonrecognition transaction exception under § 1.731–2(d)(1)(ii) of the final regulations.

Several commentators also suggested that the five-year rules of § 1.731–2(d)(2) and (3) of the proposed regulations be eliminated. Section 1.731–2(d)(2) of the proposed regulations provided that a marketable security that was acquired in a nonrecognition transaction in exchange for other property and distributed within five years by the partnership would not be subject to section 731(c). Section 1.731–2(d)(3) of the proposed regulations provided that a marketable security that was acquired by the partnership before it became actively traded would also not be subject to section 731(c) if it was distributed by the partnership within five years of becoming actively traded. One commentator, for example, argued that a security is no less a substitute for the underlying assets in a nonrecognition transaction after five years than before five years. These five-year rules were included in the proposed regulations because of administrative concerns. For example, it may be difficult, after the passage of many years, for taxpayers or the IRS to determine the circumstances in which a partnership acquired a particular security. Moreover, it is not clear whether certain exceptions should apply to a distribution of securities if those securities were acquired by a partnership many years ago and are now distributed to a partner who was not a partner at the time the securities were acquired. These administrative concerns remain valid, and a five year time limitation provides a reasonable and simple solution to such problems. Therefore, the final regulations retain both five-year rules.

One comment requested clarification regarding whether a section 708(b)(1)(B) termination affects a partnership's qualification for the exceptions under § 1.731–2 (d) and (e) of the regulations. Another commentator suggested that the regulations be modified to provide that marketable securities will not be treated as money when there is a deemed distribution of marketable securities by the terminating partnership as the result of a section 708(b)(1)(B) termination. In response to these comments, the final regulations provide that a section 708(b)(1)(B) termination does not have any effect on a partnership's qualification for the exceptions under section 731(c). In addition, a deemed distribution occurring as a result of a section 708(b)(1)(B) termination will not be subject to section 731(c).

Several comments suggested that the 10-percent test in the investment partnership look-through rule under § 1.731–2(e)(4) of the proposed regulations should be modified or eliminated. A partnership can qualify for the investment partnership exception only if it has never been engaged in a trade or business and substantially all of its assets are investment assets. Under the proposed regulations, a partnership is treated as engaged in a trade or business engaged in by, or as holding a proportionate share of the assets of, a lower-tier partnership in which the partnership holds a partnership interest unless the upper-tier partnership does not participate in the management of the lower-tier partnership and the interest held by the upper-tier partnership is less than 10 percent of the total profits and capital interests in the lower-tier partnership. According to the comments, the requirement that the upper-tier partnership not participate in

the management of the lower-tier partnership should be sufficient to ensure passive ownership of the interest in the lower-tier partnership. The commentators further argued that ownership of more than 10 percent of the capital and profits interest in a lower-tier partnership may still be consistent with passive ownership. After consideration of these comments, the final regulations modify the rule in the proposed regulations to increase the threshold ownership percentage amount from 10 to 20 percent.

In response to a comment, the final regulations clarify that an interest in a lower-tier partnership that qualifies for the exception to the investment partnership ''look-through'' rule is treated as eligible property for purposes of determining whether the partner who contributed the lower-tier partnership interest is an eligible partner of the upper-tier investment partnership.

One commentator recommended that the regulations include an example that illustrates the section 732(a)(2) ordering rules for distributions that include money, marketable securities and other property, and to clarify whether marketable securities are treated as money for purposes of section 732(a)(2). Because the statute and the regulations provide that marketable securities are treated as money only for purposes of sections 731(a)(1) and 737, no additional examples are necessary.

One comment suggested that the effective date of the regulations should be the same as the effective date of section 731(c) because the regulations contain guidance for the various exceptions provided for by the Internal Revenue Code. In response to this comment, the final regulations provide that, for the period between the effective date of the statutory provision and the effective date of these regulations, taxpayers may apply the rules contained in these regulations. Another comment suggested that the final regulations should make clear that the rules in the investment partnership exception apply with respect to all property contributed to, or held by, a partnership at any time (including any period prior to the enactment of section 731(c)). The IRS and Treasury believe that this is sufficiently clear from the statutory language, and an explicit statement to this effect in these regulations is not necessary and may be confusing.

One comment requested that the regulations provide several examples illustrating abusive transactions intended to be covered by the anti-abuse rules of § 1.731–2(h), and that these rules be coordinated with the general anti-abuse rules of § 1.701–2. After consideration of this comment, it has been determined that the text of the regulations adequately describes several situations that would be considered abusive under these rules, and that additional examples are unnecessary.

In response to several comments, the final regulations clarify that the 90 percent test of § 1.731–2(c)(2)(i) and the 20 percent test of § 1.731–2(c)(2)(ii) are determined using the gross value of the entity's assets, disregarding any debt that may encumber or otherwise be allocable to those assets, other than debt that is incurred to acquire property with a principal purpose of avoiding or reducing the effect of section 731(c).

Finally, the regulations clarify the interaction of the limitation on gain rule in section 731(c)(3)(B) and the various exceptions listed in paragraph (d). The regulations provide that any gain or loss on a distributed security that qualifies for an exception is not taken into account in determining the distributee partner's limitation on gain.

III. Effective Dates

In general, section 731(c) applies to distributions made after December 8, 1994. These regulations are effective for distributions made on or after December 26, 1996. However, taxpayers may apply the rules of this section to distributions made after December 8, 1994, and before December 26, 1996.

Special Analyses

It has been determined that this Treasury decision is not a significant regulatory action as defined in EO 12866. Therefore, a regulatory assessment is not required. It also has been determined that section 553(b) of the Administrative Procedure Act (5 U.S.C. chapter 5) does not apply to these regulations, and because the notice of proposed rulemaking preceding the regulations was issued prior to March 29, 1996, the Regulatory Flexibility Act (5 U.S.C. chapter 6) does not apply. Pursuant to section 7805(f) of the Internal Revenue Code, the notice of proposed rulemaking preceding these regulations was submitted to the Small Business Administration for comment on its impact on small business.

Drafting Information

The principal authors of these regulations are Terri A. Belanger and William M. Kostak, Office of Assistant Chief Counsel (Passthroughs and Special Industries), IRS. However, other personnel from the IRS and Treasury Department participated in their development.

List of Subjects in 26 CFR Part 1

Income taxes, Reporting and recordkeeping requirements.

Adoption of Amendments to the Regulations

Accordingly, 26 CFR part 1 is amended as follows:

PART 1—INCOME TAXES

Paragraph 1. The authority citation for part 1 is amended by adding an entry in numerical order to read as follows:

Authority: 26 U.S.C. 7805. * * *

Section 1.731–2 also issued under 26 U.S.C. 731(c). * * *

Par. 2. Section 1.731–2 is added to read as follows:

§ 1.731–2 Partnership distributions of marketable securities.

(a) *Marketable securities treated as money.* Except as otherwise provided in section 731(c) and this section, for purposes of sections 731(a)(1) and 737, the term money includes marketable securities and such securities are taken into account at their fair market value as of the date of the distribution.

(b) *Reduction of amount treated as money*—(1) *Aggregation of securities.* For purposes of section 731(c)(3)(B) and this paragraph (b), all marketable securities held by a partnership are treated as marketable securities of the same class and issuer as the distributed security.

(2) *Amount of reduction.* The amount of the distribution of marketable securities that is treated as a distribution of money under section 731(c) and paragraph (a) of this section is reduced (but not below zero) by the excess, if any, of—

(i) The distributee partner's distributive share of the net gain, if any, which would be recognized if all the marketable securities held by the partnership were sold (immediately before the transaction to which the distribution relates) by the partnership for fair market value; over

(ii) The distributee partner's distributive share of the net gain, if any, which is attributable to the marketable securities held by the partnership immediately after the transaction, determined by using the same fair market value as used under paragraph (b)(2)(i) of this section.

(3) *Distributee partner's share of net gain.* For purposes of section 731(c)(3)(B) and paragraph (b)(2) of this section, a partner's distributive share of net gain is determined—

(i) By taking into account any basis adjustments under section 743(b) with respect to that partner;

(ii) Without taking into account any special allocations adopted with a principal purpose of avoiding the effect of section 731(c) and this section; and

(iii) Without taking into account any gain or loss attributable to a distributed security to which paragraph (d)(1) of this section applies.

(c) *Marketable securities*—(1) *In general.* For purposes of section 731(c) and this section, the term *marketable securities* is defined in section 731(c)(2).

(2) *Actively traded.* For purposes of section 731(c) and this section, a financial instrument is actively traded (and thus is a marketable security) if it is of a type that is, as of the date of distribution, actively traded within the meaning of section 1092(d)(1). Thus, for example, if *XYZ* common stock is listed on a national securities exchange, particular shares of *XYZ* common stock that are distributed by a partnership are marketable securities even if those particular shares cannot be resold by the distributee partner for a designated period of time.

(3) *Interests in an entity*—(i) *Substantially all.* For purposes of section 731(c)(2)(B)(v) and this section, substantially all of the assets of an entity consist (directly or indirectly) of marketable securities, money, or both only if 90 percent or more of the assets of the entity (by value) at the time of the distribution of an interest in the entity consist (directly or indirectly) of marketable securities, money, or both.

(ii) *Less than substantially all.* For purposes of section 731(c)(2)(B)(vi) and this section, an interest in an entity is a marketable security to the extent that the value of the interest is attributable (directly or indirectly) to marketable securities, money, or both, if less than 90 percent but 20 percent or more of the assets of the entity (by value) at the time of the distribution of an interest in the entity consist (directly or indirectly) of marketable securities, money, or both.

(4) *Value of assets.* For purposes of section 731(c) and this section, the value of the assets of an entity is determined without regard to any debt that may encumber or otherwise be allocable to those assets, other than debt that is incurred to acquire an asset with a principal purpose of avoiding or reducing the effect of section 731(c) and this section.

(d) *Exceptions*—(1) *In general.* Except as otherwise provided in paragraph (d)(2) of this section, section 731(c) and this section do not apply to the distribution of a marketable security if—

(i) The security was contributed to the partnership by the distributee partner;

(ii) The security was acquired by the partnership in a nonrecognition transaction, and the following conditions are satisfied—

(A) The value of any marketable securities and money exchanged by the partnership in the nonrecognition transaction is less than 20 percent of the value of all the assets exchanged by the partnership in the nonrecognition transaction; and

(B) The partnership distributed the security within five years of either the date the security was acquired by the partnership or, if later, the date the security became marketable; or

(iii) The security was not a marketable security on the date acquired by the partnership, and the following conditions are satisfied—

(A) The entity that issued the security had no outstanding marketable securities at the time the security was acquired by the partnership;

(B) The security was held by the partnership for at least six months before the date the security became marketable; and

(C) The partnership distributed the security within five years of the date the security became marketable.

(2) *Anti-stuffing rule.* Paragraph (d)(1) of this section does not apply to the extent that 20 percent or more of the value of the distributed security is attributable to marketable securities or money contributed (directly or indirectly) by the partnership to the entity to which the distributed security relates after the security was acquired by the partnership (other than marketable securities contributed by the partnership that were originally contributed to the partnership by the distributee partner). For purposes of this paragraph (d)(2), money contributed by the distributing partnership does not include any money deemed contributed by the partnership as a result of section 752.

(3) *Successor security.* Section 731(c) and this section apply to the distribution of a marketable security acquired by the partnership in a nonrecognition transaction in exchange for a security the distribution of which immediately prior to the exchange would have been excepted under this paragraph (d) only to the extent that section 731(c) and this section otherwise would have applied to the exchanged security.

(e) *Investment partnerships*—(1) *In general.* Section 731(c) and this section do not apply to the distribution of marketable securities by an investment partnership (as defined in section 731(c)(3)(C)(i)) to an eligible partner (as defined in section 731(c)(3)(C)(iii)).

(2) *Eligible partner*—(i) *Contributed services.* For purposes of section 731(c)(3)(C)(iii) and this section, a partner is not treated as a partner other than an eligible partner solely because the partner contributed services to the partnership.

(ii) *Contributed partnership interests.* For purposes of determining whether a partner is an eligible partner under section 731(c)(3)(C), if the partner has contributed to the investment partnership an interest in another partnership that meets the requirements of paragraph (e)(4)(i) of this section after the contribution, the contributed interest is treated as property specified in section 731(c)(3)(C)(i).

(3) *Trade or business activities.* For purposes of section 731(c)(3)(C) and this section, a partnership is not treated as engaged in a trade or business by reason of——

(i) Any activity undertaken as an investor, trader, or dealer in any asset described in section 731(c)(3)(C)(i), including the receipt of commitment fees, break-up fees, guarantee fees, director's fees, or similar fees that are customary in and incidental to any activities of the partnership as an investor, trader, or dealer in such assets;

(ii) Reasonable and customary management services (including the receipt of reasonable and customary fees in exchange for such management services) provided to an investment partnership (within the meaning of section 731(c)(3)(C)(i)) in which the partnership holds a partnership interest; or

(iii) Reasonable and customary services provided by the partnership in assisting the formation, capitalization, expansion, or offering of interests in a corporation (or other entity) in which the partnership holds or acquires a significant equity interest (including the provision of advice or consulting services, bridge loans, guarantees of obligations, or service on a company's board of directors), provided that the anticipated receipt of compensation for the services, if any, does not represent a significant purpose for the partnership's investment in the entity and is incidental to the investment in the entity.

(4) *Partnership tiers.* For purposes of section 731(c)(3)(C)(iv) and this section, a partnership (upper-tier partnership) is not treated as engaged in a trade or business engaged in by, or as holding (instead of a partnership interest) a proportionate share of the assets of, a partnership (lower-tier partnership) in which the partnership holds a partnership interest if——

(i) The upper-tier partnership does not actively and substantially

participate in the management of the lower-tier partnership; and

(ii) The interest held by the upper-tier partnership is less than 20 percent of the total profits and capital interests in the lower-tier partnership.

(f) *Basis rules*—(1) *Partner's basis*—(i) *Partner's basis in distributed securities.* The distributee partner's basis in distributed marketable securities with respect to which gain is recognized by reason of section 731(c) and this section is the basis of the security determined under section 732, increased by the amount of such gain. Any increase in the basis of the marketable securities attributable to gain recognized by reason of section 731(c) and this section is allocated to marketable securities in proportion to their respective amounts of unrealized appreciation in the hands of the partner before such increase.

(ii) *Partner's basis in partnership interest.* The basis of the distributee partner's interest in the partnership is determined under section 733 as if no gain were recognized by the partner on the distribution by reason of section 731(c) and this section.

(2) *Basis of partnership property.* No adjustment is made to the basis of partnership property under section 734 as a result of any gain recognized by a partner, or any step-up in the basis in the distributed marketable securities in the hands of the distributee partner, by reason of section 731(c) and this section.

(g) *Coordination with other sections*—(1) *Sections 704(c)(1)(B) and 737*—(i) *In general.* If a distribution results in the application of sections 731(c) and one or both of sections 704(c)(1)(B) and 737, the effect of the distribution is determined by applying section 704(c)(1)(B) first, section 731(c) second, and finally section 737.

(ii) *Section 704(c)(1)(B).* The basis of the distributee partner's interest in the partnership for purposes of determining the amount of gain, if any, recognized by reason of section 731(c) (and for determining the basis of the marketable securities in the hands of the distributee partner) includes the increase or decrease, if any, in the partner's basis that occurs under section 704(c)(1)(B)(iii) as a result of a distribution to another partner of property contributed by the distributee partner in a distribution that is part of the same distribution as the marketable securities.

(iii) *Section 737*—(A) *Marketable securities as other property.* A distribution of marketable securities is treated as a distribution of property other than money for purposes of section 737 to the extent that the marketable securities are not treated as money under section 731(c). In addition, marketable securities contributed to the partnership are treated as property other than money in determining the contributing partner's net precontribution gain under section 737(b).

(B) *Basis increase under section 737.* The basis of the distributee partner's interest in the partnership for purposes of determining the amount of gain, if any, recognized by reason of section 731(c) (and for determining the basis of the marketable securities in the hands of the distributee partner) does not include the increase, if any, in the partner's basis that occurs under section 737(c)(1) as a result of a distribution of property to the distributee partner in a distribution that is part of the same distribution as the marketable securities.

(2) *Section 708(b)(1)(B).* If a partnership termination occurs under section 708(b)(1)(B), the successor partnership will be treated as if there had been no termination for purposes of section 731(c) and this section. Accordingly, a section 708(b)(1)(B) termination will not affect whether a partnership qualifies for any of the exceptions in paragraphs (d) and (e) of this section. In addition, a deemed distribution that may occur as a result of a section 708(b)(1)(B) termination will not be subject to section 731(c) and this section.

(h) *Anti-abuse rule.* The provisions of section 731(c) and this section must be applied in a manner consistent with the purpose of section 731(c) and the substance of the transaction. Accordingly, if a principal purpose of a transaction is to achieve a tax result that is inconsistent with the purpose of section 731(c) and this section, the Commissioner can recast the transaction for Federal tax purposes as appropriate to achieve tax results that are consistent with the purpose of section 731(c) and this section. Whether a tax result is inconsistent with the purpose of section 731(c) and this section must be determined based on all the facts and circumstances. For example, under the provisions of this paragraph (h)—

(1) A change in partnership allocations or distribution rights with respect to marketable securities may be treated as a distribution of the marketable securities subject to section 731(c) if the change in allocations or distribution rights is, in substance, a distribution of the securities;

(2) A distribution of substantially all of the assets of the partnership other than marketable securities and money to some partners may also be treated as a distribution of marketable securities to the remaining partners if the distribution of the other property and the withdrawal of the other partners is, in substance, equivalent to a distribution of the securities to the remaining partners; and

(3) The distribution of multiple properties to one or more partners at different times may also be treated as part of a single distribution if the distributions are part of a single plan of distribution.

(i) [Reserved]

(j) *Examples.* The following examples illustrate the rules of this section. Unless otherwise specified, all securities held by a partnership are marketable securities within the meaning of section 731(c); the partnership holds no marketable securities other than the securities described in the example; all distributions by the partnership are subject to section 731(a) and are not subject to sections 704(c)(1)(B), 707(a)(2)(B), 751(b), or 737; and no securities are eligible for an exception to section 731(c). The examples are as follows:

Example 1. Recognition of gain. (i) *A* and *B* form partnership *AB* as equal partners. *A* contributes property with a fair market value of $1,000 and an adjusted tax basis of $250. *B* contributes $1,000 cash. *AB* subsequently purchases Security *X* for $500 and immediately distributes the security to *A* in a current distribution. The basis in *A*'s interest in the partnership at the time of distribution is $250.

(ii) The distribution of Security *X* is treated as a distribution of money in an amount equal to the fair market value of Security *X* on the date of distribution ($500). (The amount of the distribution that is treated as money is not reduced under section 731(c)(3)(B) and paragraph (b) of this section because, if Security *X* had been sold immediately before the distribution, there would have been no gain recognized by *AB* and *A*'s distributive share of the gain would therefore have been zero.) As a result, *A* recognizes $250 of gain under section 731(a)(1) on the distribution ($500 distribution of money less $250 adjusted tax basis in *A*'s partnership interest).

Example 2. Reduction in amount treated as money—in general. (i) *A* and *B* form partnership *AB* as equal partners. *AB* subsequently distributes Security *X* to *A* in a current distribution. Immediately before the distribution, *AB* held securities with the following fair market values, adjusted tax bases, and unrecognized gain or loss:

	Value	Basis	Gain (Loss)
Security X	100	70	30
Security Y	100	80	20
Security Z	100	110	(10)

(ii) If *AB* had sold the securities for fair market value immediately before the distribution to *A*, the partnership would have

recognized $40 of net gain ($30 gain on Security *X* plus $20 gain on Security *Y* minus $10 loss on Security *Z*). *A*'s distributive share of this gain would have been $20 (one-half of $40 net gain). If *AB* had sold the remaining securities immediately after the distribution of Security *X* to *A*, the partnership would have $10 of net gain ($20 of gain on Security *Y* minus $10 loss on Security *Z*). *A*'s distributive share of this gain would have been $5 (one-half of $10 net gain). As a result, the distribution resulted in a decrease of $15 in *A*'s distributive share of the net gain in *AB*'s securities ($20 net gain before distribution minus $5 net gain after distribution).

(iii) Under paragraph (b) of this section, the amount of the distribution of Security *X* that is treated as a distribution of money is reduced by $15. The distribution of Security *X* is therefore treated as a distribution of $85 of money to *A* ($100 fair market value of Security *X* minus $15 reduction).

Example 3. Reduction in amount treated as money—carried interest. (i) *A* and *B* form partnership *AB*. *A* contributes $1,000 and provides substantial services to the partnership in exchange for a 60 percent interest in partnership profits. *B* contributes $1,000 in exchange for a 40 percent interest in partnership profits. *AB* subsequently distributes Security *X* to *A* in a current distribution. Immediately before the distribution, *AB* held securities with the following fair market values, adjusted tax bases, and unrecognized gain:

	Value	Basis	Gain
Security *X*	100	80	20
Security *Y*	100	90	10

(ii) If *AB* had sold the securities for fair market value immediately before the distribution to *A*, the partnership would have recognized $30 of net gain ($20 gain on Security *X* plus $10 gain on Security *Y*). *A*'s distributive share of this gain would have been $18 (60 percent of $30 net gain). If *AB* had sold the remaining securities immediately after the distribution of Security *X* to *A*, the partnership would have $10 of net gain ($10 gain on Security *Y*). *A*'s distributive share of this gain would have been $6 (60 percent of $10 net gain). As a result, the distribution resulted in a decrease of $12 in *A*'s distributive share of the net gain in *AB*'s securities ($18 net gain before distribution minus $6 net gain after distribution).

(iii) Under paragraph (b) of this section, the amount of the distribution of Security *X* that is treated as a distribution of money is reduced by $12. The distribution of Security *X* is therefore treated as a distribution of $88 of money to *A* ($100 fair market value of Security *X* minus $12 reduction).

Example 4. Reduction in amount treated as money—change in partnership allocations.

(i) *A* is admitted to partnership *ABC* as a partner with a 1 percent interest in partnership profits. At the time of *A*'s admission, *ABC* held no securities. *ABC* subsequently acquires Security *X*. *A*'s interest in partnership profits is subsequently increased to 2 percent for securities acquired after the increase. *A* retains a 1 percent interest in all securities acquired before the increase. *ABC* then acquires Securities *Y* and *Z* and later distributes Security *X* to *A* in a current distribution. Immediately before the distribution, the securities held by *ABC* had the following fair market values, adjusted tax bases, and unrecognized gain or loss:

	Value	Basis	Gain (Loss)
Security *X*	1,000	500	500
Security *Y*	1,000	800	200
Security *Z*	11,000	1,100	(100)

(ii) If *ABC* had sold the securities for fair market value immediately before the distribution to *A*, the partnership would have recognized $600 of net gain ($500 gain on Security *X* plus $200 gain on Security *Y* minus $100 loss on Security *Z*). *A*'s distributive share of this gain would have been $7 (1 percent of $500 gain on Security *X* plus 2 percent of $200 gain on Security *Y* minus 2 percent of $100 loss on Security *Z*).

(iii) If *ABC* had sold the remaining securities immediately after the distribution of Security *X* to *A*, the partnership would have $100 of net gain ($200 gain on Security *Y* minus $100 loss on Security *Z*). *A*'s distributive share of this gain would have been $2 (2 percent of $200 gain on Security *Y* minus 2 percent of $100 loss on Security *Z*). As a result, the distribution resulted in a decrease of $5 in *A*'s distributive share of the net gain in *ABC*'s securities ($7 net gain before distribution minus $2 net gain after distribution).

(iv) Under paragraph (b) of this section, the amount of the distribution of Security *X* that is treated as a distribution of money is reduced by $5. The distribution of Security *X* is therefore treated as a distribution of $995 of money to *A* ($1000 fair market value of Security *X* minus $5 reduction).

Example 5. Basis consequences—distribution of marketable security. (i) *A* and *B* form partnership *AB* as equal partners. *A* contributes nondepreciable real property with a fair market value and adjusted tax basis of $100.

(ii) *AB* subsequently distributes Security *X* with a fair market value of $120 and an adjusted tax basis of $90 to *A* in a current distribution. At the time of distribution, the basis in *A*'s interest in the partnership is $100. The amount of the distribution that is treated as money is reduced under section 731(c)(3)(B) and paragraph (b)(2) of this section by $15 (one-half of $30 net gain in Security *X*). As a result, *A* recognizes $5 of gain under section 731(a) on the distribution (excess of $105 distribution of money over $100 adjusted tax basis in *A*'s partnership interest).

(iii) *A*'s adjusted tax basis in Security *X* is $95 ($90 adjusted basis of Security *X* determined under section 732(a)(1) plus $5 of gain recognized by *A* by reason of section 731(c)). The basis in *A*'s interest in the partnership is $10 as determined under section 733 ($100 pre-distribution basis minus $90 basis allocated to Security *X* under section 732).

Example 6. Basis consequences—distribution of marketable security and other property. (i) *A* and *B* form partnership *AB* as equal partners. *A* contributes nondepreciable real property, with a fair market value of $100 and an adjusted tax basis of $10.

(ii) *AB* subsequently distributes Security *X* with a fair market value and adjusted tax basis of $40 to *A* in a current distribution and, as part of the same distribution, *AB* distributes Property *Z* to *A* with an adjusted tax basis and fair market value of $40. At the time of distribution, the basis in *A*'s interest in the partnership is $10. *A* recognizes $30 of gain under section 731(a) on the distribution (excess of $40 distribution of money over $10 adjusted tax basis in *A*'s partnership interest).

(iii) *A*'s adjusted tax basis in Security *X* is $35 ($5 adjusted basis determined under section 732(a)(2) plus $30 of gain recognized by *A* by reason of section 731(c)). *A*'s basis in Property *Z* is $5, as determined under section 732(a)(2). The basis in *A*'s interest in the partnership is $0 as determined under section 733 ($10 pre-distribution basis minus $10 basis allocated between Security *X* and Property *Z* under section 732).

(iv) *AB*'s adjusted tax basis in the remaining partnership assets is unchanged unless the partnership has a section 754 election in effect. If *AB* made such an election, the aggregate basis of *AB*'s assets would be increased by $70 (the difference between the $80 combined basis of Security *X* and Property *Z* in the hands of the partnership before the distribution and the $10 combined basis of the distributed property in the hands of *A* under section 732 after the distribution). Under section 731(c)(5), no adjustment is made to partnership property under section 734 as a result of any gain recognized by *A* by reason of section 731(c) or as a result of any step-up in basis in the distributed marketable securities in the hands of *A* by reason of section 731(c).

Example 7. Coordination with section 737. (i) *A* and *B* form partnership *AB*. *A* contributes Property *A*, nondepreciable real property with a fair market value of $200 and an adjusted basis of $100 in exchange for a 25 percent interest in partnership capital and profits. *AB* owns marketable Security *X*.

(ii) Within five years of the contribution of Property *A*, *AB* subsequently distributes Security *X*, with a fair market value of $120 and an adjusted tax basis of $100, to *A* in a current distribution that is subject to section 737. As part of the same distribution, *AB* distributes Property *Y* to *A* with a fair market value of $20 and an adjusted tax basis of $0. At the time of distribution, there has been no change in the fair market value of Property *A* or the adjusted tax basis in *A*'s interest in the partnership.

(iii) If *AB* had sold Security *X* for fair market value immediately before the distribution to *A*, the partnership would have recognized $20 of gain. *A*'s distributive share of this gain would have been $5 (25 percent of $20 gain). Because *AB* has no other marketable securities, *A*'s distributive share of gain in partnership securities after the distribution would have been $0. As a result, the distribution resulted in a decrease of $5 in *A*'s share of the net gain in *AB*'s securities ($5 net gain before distribution minus $0 net

gain after distribution). Under paragraph (b)(2) of this section, the amount of the distribution of Security *X* that is treated as a distribution of money is reduced by $5. The distribution of Security *X* is therefore treated as a distribution of $115 of money to *A* ($120 fair market value of Security *X* minus $5 reduction). The portion of the distribution of the marketable security that is not treated as a distribution of money ($5) is treated as other property for purposes of section 737.

(iv) *A* recognizes total gain of $40 on the distribution. *A* recognizes $15 of gain under section 731(a)(1) on the distribution of the portion of Security *X* treated as money ($115 distribution of money less $100 adjusted tax basis in *A*'s partnership interest). *A* recognizes $25 of gain under section 737 on the distribution of Property *Y* and the portion of Security *X* that is not treated as money. *A*'s section 737 gain is equal to the lesser of (i) *A*'s precontribution gain ($100) or (ii) the excess of the fair market value of property received ($20 fair market value of Property *Y* plus $5 portion of Security *X* not treated as money) over the adjusted basis in *A*'s interest in the partnership immediately before the distribution ($100) reduced (but not below zero) by the amount of money received in the distribution ($115).

(v) *A*'s adjusted tax basis in Security *X* is $115 ($100 basis of Security *X* determined under section 732(a) plus $15 of gain recognized by reason of section 731(c)). *A*'s adjusted tax basis in Property *Y* is $0 under section 732(a). The basis in *A*'s interest in the partnership is $25 ($100 basis before distribution minus $100 basis allocated to Security *X* under section 732(a) plus $25 gain recognized under section 737).

(k) *Effective date.* This section applies to distributions made on or after December 26, 1996. However, taxpayers may apply the rules of this section to distributions made after December 8, 1994, and before December 26, 1996.

Margaret Milner Richardson,

Commissioner of Internal Revenue.

Approved: November 27, 1996.

Donald C. Lubick,

Acting Assistant Secretary of the Treasury (Tax Policy).

[FR Doc. 96–32854 Filed 12–24–96; 8:45 am]

BILLING CODE 4830–01–U

DEPARTMENT OF LABOR

Office of Labor-Management Standards

29 CFR Parts 402, 403, 404, 405, 406, 408, and 409

Submission of Computer-Generated Labor Organization and Auxiliary Reports

AGENCY: Office of Labor-Management Standards, Labor.

ACTION: Notice of policy.

SUMMARY: The Labor-Management Reporting and Disclosure Act of 1959, as amended (LMRDA), provides for the reporting and disclosure of information on the financial transactions and administrative practices of labor organizations. The statute also provides, under certain circumstances, for reporting and disclosure of information by labor organization officers and employees, employers, labor relations consultants, and surety companies. The Department of Labor's Office of Labor-Management Standards (OLMS) has begun to receive required reports in a variety of computer-generated formats. OLMS has developed standards to ensure the uniformity of computer-generated reporting forms to assist persons who make approximately 10,000 requests to examine these reports each year. This notice of policy is to inform those who file reports of the standards for computer-generated reports.

EFFECTIVE DATE: December 26, 1996.

FOR FURTHER INFORMATION CONTACT: David Geiss, Chief, Section of Reports and Disclosure, Office of Labor-Management Standards, U.S. Department of Labor, 200 Constitution Avenue, NW., Room N–5119, Washington, DC 20210, (202) 219–7353 (this is not a toll-free number).

SUPPLEMENTARY INFORMATION:

Background: While enacting the reporting provisions of the Labor-Management Reporting and Disclosure Act of 1959, as amended (LMRDA), Congress expressed the belief that the labor-management process and union members, officers, and the public in general would benefit by having access to information about labor organizations, their officers and employees, employers, labor relations consultants, and surety companies. In particular, the disclosure of financial information about labor organizations was intended to help ensure their fiscal integrity. Consequently, labor organizations are required to file information reports, annual financial reports, and trusteeship reports. Labor organization officers and employees, employers, and labor relations consultants who engage in certain activities are required to file financial disclosure reports. Surety companies which issue bonds required by the LMRDA must file annual reports concerning their experience with such bonds. Section 205 of the LMRDA provides that these reports are public information.

Pursuant to section 208 of the LMRDA and 29 CFR Parts 402, 403, 404, 405, 406, 408, and 409, OLMS has prescribed and printed reporting forms to be used to submit the required reports. In an effort to reduce the paperwork and reporting burdens on those who file required reports, OLMS has begun to accept computer-generated reports in lieu of the printed OLMS forms. However, to insure the integrity of public disclosure for union members and others who examine and study the reports, computer-generated reports must meet certain standards to ensure uniformity and compliance with the Congressionally mandated reporting requirements.

Current Actions: Computer-generated reports which are submitted to OLMS will be accepted only if in overall appearance and content they are virtually indistinguishable from the printed OLMS forms and their readability is equivalent to the readability of OLMS forms (Forms LM–1, LM–2, LM–3, LM–4, LM–10, LM–15, LM–15A, LM–16, LM–20, LM–21, LM–30, and S–1). For example, a form should meet the following criteria to be accepted as substantially identical to the corresponding printed OLMS form:

* The form should be the same size (8½ by 11 inches) as the OLMS form.

* The layout of each page should be the same as the layout on the OLMS form.

* There should be no abbreviations or misspellings, and no additions or deletions of words.

* The font-size, spacing, and boxes on the form should be substantially the same as those used on the OLMS form.

Computer-generated forms which are not substantially identical to OLMS forms will not be accepted as complying with the reporting requirements of the LMRDA and will be returned to the filer.

Dated: December 19, 1996.

John Kotch,

Acting Deputy Assistant Secretary.

[FR Doc. 96–32782 Filed 12–24–96; 8:45 am]

BILLING CODE 4510–86–M

PENSION BENEFIT GUARANTY CORPORATION

29 CFR Parts 4000, 4022, and 4041

RIN 1212–AA75

Finding Aids; Benefits Payable in Terminated Single-Employer Plans; Termination of Single-Employer Plans

AGENCY: Pension Benefit Guaranty Corporation.

ACTION: Correction.

SUMMARY: On July 1, 1996, the Pension Benefit Guaranty Corporation published

in the Federal Register (at 61 FR 34001, FR Doc. 96–16398) a final rule reorganizing, renumbering, and reinventing its regulations. This document contains corrections to 29 CFR Parts 4000, 4022, and 4041 as so published.

EFFECTIVE DATE: July 1, 1996.

FOR FURTHER INFORMATION CONTACT: Harold J. Ashner, Assistant General Counsel, or Marc L. Jordan, Attorney, Office of the General Counsel, Suite 340, Pension Benefit Guaranty Corporation, 1200 K Street, NW., Washington, DC 20005–4026; 202–326–4024 (202–326–4179 for TTY and TDD).

SUPPLEMENTARY INFORMATION: As published, 29 CFR Parts 4000, 4022, and 4041 contain errors that call for correction. This document corrects those errors.

List of Subjects in 29 CFR Chapter XL

Part 4000

Administrative practice and procedure, Authority delegations (Government agencies), Blind, Business and industry, Civil rights, Claims, Conflict of interests, Deaf, Disabled, Discrimination against handicapped, Equal employment opportunity, Federal buildings and facilities, Freedom of information, Government employees, Handicapped, Nondiscrimination, Organization and functions (Government agencies), Penalties, Pension insurance, Pensions, Physically handicapped, Political activities (Government employees), Privacy, Production and disclosure of information, Reporting and recordkeeping requirements, Small businesses, Testimony.

Parts 4022 and 4041

Pension insurance, Pensions, Reporting and recordkeeping requirements.

Accordingly, 29 CFR Parts 4000, 4022, and 4041 are corrected as follows:

PART 4000—FINDING AIDS

1. The authority citation for Part 4000 continues to read as follows:

Authority: 29 U.S.C. 1302(b)(3).

§ 4000.1 [Corrected]

2. In § 4001.1, in the table ''Subchapter B—Rules Applicable to Single-Employer and Multiemployer Plans,'' the next-to-last entry (beginning with ''2612'' in the left column) is corrected to read as follows:

§ 4000.1 Distribution table.

* * * * *

Ch. XXVI part Subpart(s)/section(s)	Ch. XL part(s)/subpart(s) Subpart(s)/section(s)
Subchapter B—Rules Applicable to Single-Employer and Multiemployer Plans	
* * * * *	
2612	4001
* * * * *	

§ 4000.2 [Corrected]

3. In § 4000.2, the table, ''Subchapter A—General,'' is corrected to read as follows:

§ 4000.2 Derivation table.

* * * * *

Ch. XL part Subpart/section(s)	Ch. XXVI part(s) Subpart/section(s)
Subchapter A—General	
4000	[Tables].
4001	2612 (and various statutory and regulatory definitions).
4002	2601.
4003	2606.

PART 4022—BENEFITS PAYABLE IN TERMINATED SINGLE-EMPLOYER PLANS

4. The authority citation for Part 4022 continues to read as follows:

* * * * *

Authority: 29 U.S.C. 1302, 1322, 1322b, 1341(c)(3)(D), and 1344.

§ 4022.3 [Corrected]

5. In § 4022.3(a), the word ''is'' is corrected to read ''is, on the termination date,''.

PART 4041—TERMINATION OF SINGLE-EMPLOYER PLANS

6. The authority citation for Part 4041 continues to read as follows:

Authority: 29 U.S.C. 1302(B)(3), 1341, 1344, 1350.

§ 4041.2 [Corrected]

7. In § 4041.2, the second and third sentences in the definition of Proposed termination date are corrected to read: ''A proposed termination date becomes the 'termination date' if a plan terminates in a standard termination. A proposed termination date specified in the notice of intent to terminate or standard termination notice may not be earlier than the 60th day, nor later than the 90th day, after the issuance of the notice of intent to terminate.''

Issued in Washington, D.C., this 19th day of December, 1996.

Martin Slate,

Executive Director, Pension Benefit Guaranty Corporation.

[FR Doc. 96–32763 Filed 12–24–96; 8:45 am]

BILLING CODE 7708–01–P

DEPARTMENT OF THE TREASURY

Office of Foreign Assets Control

31 CFR Part 596

Terrorism List Governments Sanctions Regulations; Authorization for Government Stipends and Scholarships for Students

AGENCY: Office of Foreign Assets Control, Treasury.

ACTION: Final rule; amendment.

SUMMARY: This final rule amends the Terrorism List Governments Sanctions Regulations to generally authorize payment by the Governments of Syria and Sudan of stipends and scholarships for Syrian and Sudanese nationals studying at accredited educational institutions in the United States.

EFFECTIVE DATE: December 20, 1996.

FOR FURTHER INFORMATION CONTACT: Office of Foreign Assets Control, Department of the Treasury, Washington, DC 20220; tel.: 202/622–2520.

SUPPLEMENTARY INFORMATION:

Electronic and Facsimile Availability

This document is available as an electronic file on *The Federal Bulletin Board* the day of publication in the Federal Register. By modem, dial 202/512–1387 and type ''/GO FAC,'' or call 202/512–1530 for disk or paper copies. This file is available for downloading without charge in WordPerfect 5.1, ASCII, and Adobe Acrobat™ readable (*.PDF) formats. For Internet access, the address for use with the World Wide Web (Home Page), Telnet, or FTP protocol is: fedbbs.access.gpo.gov. The document is also accessible for downloading in ASCII format without charge from Treasury's Electronic Library (''TEL'') in the ''Business, Trade and Labor Mall'' of the FedWorld bulletin board. By modem, dial 703/321–3339, and select the appropriate self–expanding file in TEL. For Internet access, use one of the following protocols: Telnet = fedworld.gov (192.239.93.3); World Wide Web (Home Page) = http://www.fedworld.gov; FTP = ftp.fedworld.gov (192.239.92.205).

Additional information concerning the programs of the Office of Foreign Assets Control is available for downloading from the Office's Internet Home Page: http://www.ustreas.gov/treasury/services/fac/fac.html, or in fax form through the Office's 24–hour fax–on–demand service: call 202/622–0077 using a fax machine, fax modem, or (within the United States) a touch–tone telephone.

Background

On August 22, 1996, the Office of Foreign Assets Control issued the Terrorism List Governments Sanctions Regulations, 31 CFR part 596 (the ''Regulations''), implementing section 321 of the Antiterrorism and Effective Death Penalty Act of 1996 (Pub. L. 104-132, 110 Stat. 1214, 1254 (18 U.S.C. 2332d)). Section 596.504 authorizes U.S. persons to engage in all financial transactions with a terrorism list government that is not otherwise subject to sanctions contained in 31 CFR chapter V, currently the Governments of Syria and Sudan, except for a transfer from a terrorism list government constituting a donation to a U.S. person, or a payment that a U.S. person knows or has reason to know poses the risk of furthering terrorist acts in the United States. This final rule adds § 596.505 to the Regulations, generally authorizing donations from the Governments of Syria and Sudan in the form of stipends and scholarships for their respective nationals enrolled as students in accredited educational institutions in the United States. Representations made by an accredited educational institution concerning the status of a student may be relied upon in determining the applicability of this general license.

The general license contained in § 596.505 was originally issued by the Office of Foreign Assets Control on October 24, 1996, as General License No. 1. General License No. 1 may continue to be relied upon for transactions within its scope occurring between October 24, 1996, and the effective date of this final rule.

Since the Regulations involve a foreign affairs function, Executive Order 12886 and the provisions of the Administrative Procedure Act (5 U.S.C. 553) requiring notice of proposed rulemaking, opportunity for public participation, and delay in effective date, are inapplicable. Because no notice of proposed rulemaking is required for this rule, the Regulatory FlexibilityAct (5 U.S.C. 601-612) does not apply.

No collection of information is contained in this final rule.

List of Subjects in 31 CFR Part 596

Administrative practice and procedure, Banking and finance, Cuba, Fines and penalties, Iran, Iraq, Libya, North Korea, Reporting and recordkeeping requirements, Syria, Sudan, Terrorism, Transfer of assets.

For the reasons set forth in the preamble, 31 CFR part 596 is amended as follows:

PART 596—TERRORISM LIST GOVERNMENTS SANCTIONS REGULATIONS

1. The authority citation for part 596 continues to read as follows:

Authority: Pub. L. 104–132, 110 Stat. 1214, 1254 (18 U.S.C. 2332d).

Subpart E——Licenses, Authorizations and Statements of Licensing Policy

2. Section 596.505 is added to subpart E to read as follows:

§ 596.505 Certain transactions related to stipends and scholarships authorized.

(a) United States persons are authorized to engage in all financial transactions with respect to stipends and scholarships covering tuition and related educational, living and travel expenses provided by the Government of Syria to Syrian nationals or the Government of Sudan to Sudanese nationals who are enrolled as students in an accredited educational institution in the United States. Representations made by an accredited educational institution concerning the status of a student maybe relied upon in determining the applicability of this section.

(b) Nothing in this section authorizes a transaction prohibited by § 596.504(a)(2).

Dated: November 27, 1996.

R. Richard Newcomb,

Director, Office of Foreign Assets Control.

Approved: December 3, 1996.

James E. Johnson,

Assistant Secretary (Enforcement).

[FR Doc. 96–32858 Filed 12–20–96; 2:47 pm]

BILLING CODE 4810–25–F

DEPARTMENT OF DEFENSE

Office of the Secretary

32 CFR Part 269

Inflation Adjustment of Civil Monetary Penalties

AGENCY: Office of the Secretary, Department of Defense.

ACTION: Final rule.

SUMMARY: This final rule adjusts the amount of each statutory civil penalty subject to Department of Defense jurisdiction in accordance with the requirements of the Federal Civil Penalties Inflation Adjustment Act of 1990 as amended by the Debt Collection Improvement Act of 1996.

EFFECTIVE DATE: January 27, 1997.

FOR FURTHER INFORMATION CONTACT: Mr. Tom Summers, Directorate for Accounting Policy, Office of the Deputy Chief Financial Officer, Office of the Under Secretary of Defense (Comptroller), 1100 Defense Pentagon, Room 3A882, Washington, DC 20301–1100, (703) 697–0586 (e-mail address: summerst@ousdc.osd.mil).

SUPPLEMENTARY INFORMATION: The Federal Civil Penalties Inflation Adjustment Act of 1990 (FCPIAA), Public Law 101–410, 104 Stat. 890, 28 U.S.C. 2461, as amended by the Debt Collection Improvement Act of 1996 (DCIA), Public Law 104–134, April 26, 1996, requires the inflation adjustment of Civil Monetary Penalties (CMP) to ensure that they continue to maintain their deterrent value. The DCIA requires that not later than 180 days after its enactment, and at least once every 4 years thereafter, the head of each agency shall, by regulation published in the Federal Register, adjust each CMP within its jurisdiction by the inflation adjustment described in the FCPIAA. The inflation adjustment under the DCIA is to be determined by increasing the maximum CMP by the cost-of-living adjustment, rounding to amounts set forth in section 5(a) of the FCPIAA. The cost-of-living adjustment is the percentage (if any) for each CMP by which the Consumer Price Index (CPI) for the month of June of the calendar year preceding the adjustment, exceeds the CPI for the month of June of the calendar year in which the amount of such CMP was last set or adjusted pursuant to law. The first adjustment to a CMP may not exceed 10 percent of such penalty.

Any increased penalties shall apply only to violations which occur after the date on which the increase takes effect.

A typical example of an inflation adjustment of a CMP is as follows:

Title 10 U.S.C., section 1094(c)(1) imposes a maximum penalty of $5,000 to a person who provides health care independently as a health-care professional where that person does not have a current license to provide such care. The term ''health care professional'' means physician, dentist, clinical psychologist or nurse and any other person providing direct patient care as may be designated by the

Secretary of Defense in regulations. The penalty was set in 1985. The CPI for June 1985 and 322.3. The CPI for June 1995 is 456.7. The inflation factor, therefore, is 456.7/322.3 or 1.42. The maximum penalty amount after increase and statutory rounding would be $7,000 (1.42×5,000). The new maximum penalty amount after applying the 10 percent limit on an initial increase is $5,500.

A similar calculation was done with respect to each CMP subject to the jurisdiction of the Department of Defense. In compliance with the DCIA, the Department of Defense hereby is amending its religions by creating this new part.

This final rule has been issued without prior public notice or opportunity for public comment. The Administrative Procedure Act (5 U.S.C. 553(b)(B)) does not require that process ''when the agency for good cause finds (and incorporates the finding and a brief statement of reasons therefor in the rules issued) that notice and public procedure thereon are impracticable, unnecessary, or contrary to the public interest.'' In this instance, the Department of Defense finds for good cause, that solicitation of public comment on this final rule is unnecessary and impractical. The Congress has required that the agency issue the amendments contained the rule, and provided no discretion to the agency regarding the substance of the amendments. All that is required of the Department of Defense for determination of the amount of the inflation adjustment are ministerial computations.

It has been determined that 32 CFR part 269 is not a significant rule as defined under section 3(f)(1) through 3(f)(4) of Executive order 12866. The rule does not:

(1) Have an annual effect on the economy of $100 million or more or adversely affect in a material way the economy; a sector of the economy; productivity; competition; jobs; the environment; public health or safety; or State, local or tribal governments or communities;

(2) Create a serious inconsistency or otherwise interfere with an action taken or planned by another agency;

(3) Materially alter the budgetary impact of entitlement, grants, user fees, or loan programs, or the rights and obligations of recipients thereof; or

(4) Raise novel legal or policy issues arising out of legal mandate, the President's priorities, or the principles set forth in Executive Order 12866.

The Department of Defense certifies that this rule is not subject to the Regulatory Flexibility Act (5 U.S.C. 601) because it would not, if promulgated, have a significant economic impact on a substantial number of small entities. This rule implements statutory authority intended to protect the Department's programs from abusive practices, but will have no adverse or disproportionate economic impact on small businesses.

The Department of Defense certifies that this rule does not impose any reporting or recordkeeping requirements under the Paperwork Reduction Act of 1995.

List of Subjects in 32 CFR Part 269

Administrative practice and procedure, penalties.

Accordingly, Title 32, Chapter I, subchapter M of the Code of Federal Regulations, is amended to add part 269 to read as follows:

PART 269—CIVIL MONETARY PENALTY INFLATION ADJUSTMENT

Sec.
269.1 Scope and purpose.
269.2 Definitions.
269.3 Civil monetary penalty inflation adjustment.
269.4 Cost of living adjustments of civil monetary penalties.
269.5 Application of increase to violations.

Authority: 28 U.S.C. 2461.

§ 269.1 Scope and purpose.

The purpose of this part is to establish a mechanism for the regular adjustment for inflation of civil monetary penalties and to adjust such penalties in conformity with the Federal Civil Penalties Inflation Adjustment Act of 1990, 46 U.S.C. 2461, as amended by the Debt Collection Improvement Act of 1996, Public Law 104–134, April 26, 1996, in order to maintain the deterrent effect of civil monetary penalties and to promote compliance with the law.

§ 269.2 Definitions.

(a) *Department.* The Department of Defense.

(b) *Civil monetary penalty.* Any penalty, fine, or other sanction that:

(1)(i) Is for a specific monetary amount as provided by Federal law; or

(ii) Has a maximum amount provided by Federal law;

(2) Is assessed or enforced by the Department pursuant to Federal law; and

(3) Is assessed or enforced pursuant to an administrative proceeding or a civil action in the Federal Courts.

(c) *Consumer Price Index.* The index for all urban consumers published by the Department of Labor.

§ 269.3 Civil monetary penalty inflation adjustment.

The Department shall, not later than 180 days after the enactment of the Debt Collection Improvement Act on April 23, 1996, and at least once every 4 years thereafter—

(a) By regulation adjustment each civil monetary penalty provided by law within the jurisdiction of the Department of Defense by the inflation adjustment described in § 269.4; and

(b) Publish each such update in the Federal Register.

§ 269.4 Cost of living adjustments of civil monetary penalties.

(a) The inflation adjustment under § 269.3 shall be determined by increasing the maximum civil monetary penalty for each civil monetary penalty by the cost-of-living adjustment. Any increase determined under this paragraph shall be rounded to the nearest:

(1) Multiple of $10 in the case of penalties less than or equal to $100;

(2) Multiple of $100 in the case of penalties greater than $100 but less than or equal to $1,000;

(3) Multiple of $1,000 in the case of penalties greater than $1,000 but less than or equal to $10,000;

(4) Multiple of $5,000 in the case of penalties greater than $10,000 but less than or equal to $100,000;

(5) Multiple of $10,000 in the case of penalties greater than $100,000 but less than or equal to $200,000; and

(6) Multiple of $25,000 in the case of penalties greater than $200,000.

(b) For purposes of paragraph (a) of this section, the term ''cost-of-living adjustment'' means the percentage (if any) for each civil monetary penalty by which the Consumer Price Index for the month of June of the calendar year preceding the adjustment, exceeds the Consumer Price Index for the month of June of the calendar year in which the amount of such civil monetary penalty was last set or adjusted pursuant to law.

(c) *Limitaiton on initial adjustment.* The first adjustment of civil monetary penalty pursuant to § 269.3 may not exceed 10 percent of such penalty.

(d) *Inflation adjustment.* Maximum civil monetary penalties within the jurisdiction of the Department of Defense are adjusted for inflation as follows:

United States Code citation	Civil monetary penalty description	Maximum penalty amount as of 10/23/96	New adjusted maximum penalty amount
10 U.S.C. 1094(c)(1)	Unlawful Provision of Health Care	$5,000	$5,500
10 U.S.C. 1102(k)	Wrongful Disclosure—Medical Records:		
	First Offense	3,000	3,300
	Subsequent Offense	20,000	22,000
31 U.S.C. 1352	Use of Appropriated Funds to Influence Contract:		
	Minimum	10,000	11,000
	Maximum	100,000	110,000
31 U.S.C. 3721(i)	Personal Property Loss Claims from Government Personnel	1,000	1,100
31 U.S.C. 3802(a)(1)	Program Fraud Civil Remedies Act/Violation Involving False Claim	5,000	5,500
31 U.S.C. 3802(a)(2)	Program Fraud Civil Remedies Act/Violation Involving False Statement	5,000	5,500
33 U.S.C. 1319(g)(2)(A)	§ 404 Permit Condition Violation, Class I (per violation amount)	10,000	11,000
33 U.S.C. 1319(g)(2)(A)	§ 404 Permit Condition Violation, Class I (maximum amount)	25,000	27,500
33 U.S.C. 1319(g)(2)(B)	§ 404 Permit Condition Violation, Class II (per day amount)	10,000	11,000
33 U.S.C. 1319(g)(2)(B)	§ 404 Permit Condition Violation, Class II (maximum amount)	125,000	137,500

§ 269.5 Application of increase to violations.

Any increase in a civil monetary penalty under this part shall apply only to violations which occur after the date the increase takes effect.

Dated: December 18, 1996.

L.M. Bynum,

Alternate OSD Federal Register Liaison Officer, Department of Defense.

[FR Doc. 96–32564 Filed 12–24–96; 8:45 am]

BILLING CODE 5000–04–M

DEPARTMENT OF TRANSPORTATION

Coast Guard

33 CFR Part 100

[CGD 05–96–113]

RIN 2115 7E46

Special Local Regulations for Marine Events; New Year's Eve Fireworks, Delaware River, Philadelphia, PA

AGENCY: Coast Guard, DOT.

ACTION: Notice of implementation.

SUMMARY: This notice implements 33 CFR 100.509 for the New Year's Eve Fireworks Display, to be held at Penns Landing, in the Delaware River, Philadelphia, Pennsylvania on December 31, 1996. These special local regulations are needed to control vessel traffic in the vicinity of Penns Landing due to the confined nature of the waterway and expected vessel congestion during the event. The effect will be to restrict general navigation in the regulated area for the safety of spectators and other vessels transiting the event area.

EFFECTIVE DATES: 33 CFR 100.509 is effective from 11 p.m., December 31, 1996 until 1:30 a.m., January 1, 1997.

FOR FURTHER INFORMATION CONTACT: Chief Warrant Officer T.J. Donovan, marine events coordinator, Commander, Coast Guard Group Philadelphia, 1 Washington Ave., Philadelphia, PA 19147–4395, (215) 271–4940.

SUPPLEMENTARY INFORMATION: The Philadelphia Convention and Visitors Bureau will sponsor the Neighbors in the New Year fireworks display, to be launched from a barge anchored off Penns Landing, on the Delaware River, Philadelphia, Pennsylvania. A large number of spectator vessels are expected to be in the area to watch the fireworks. Therefore, to ensure the safety of spectators and transiting vessels, 33 CFR 100.509 will be in effect for the duration of the event. Under provisions of 33 CFR 100.509, a vessel may not enter the area between Pier 30 and the Benjamin Franklin Bridge unless it is registered as a participant with the event sponsor or it receives permission from the Coast Guard patrol commander. These restrictions will be in effect for a limited period and should not result in significant disruption of maritime traffic.

Dated: December 5, 1996.

T.M. Cross,

Captain U.S.C.G., Commander, Fifth Coast Guard District, Acting.

[FR Doc. 96–32845 Filed 12–24–96; 8:45 am]

BILLING CODE 4910–14–M

33 CFR Part 100

[CGD01–96–139]

RIN 2115–AE46

Special Local Regulation: Fireworks Displays Within the First Coast Guard District

AGENCY: Coast Guard, DOT.

ACTION: Notice of implementation.

SUMMARY: This document provides notice of the dates and times of the special local regulations contained in 33 CFR 100.114, ''Fireworks Displays within the First Coast Guard District.'' All vessels will be restricted from entering the area of navigable water within a 500 yard radius of the fireworks launch platform for each event listed in the table below. Implementation of these regulations is necessary to control vessel traffic within the regulated area to ensure the safety of spectators.

EFFECTIVE DATE: The regulations in 33 CFR 100.114 are effective from one hour before the January 1, 1997 scheduled start of the event until thirty minutes after the last firework is exploded for each event listed in the table below. The events are listed alphabetically with their corresponding number listed in the special local regulation, 33 CFR 100.114.

FOR FURTHER INFORMATION CONTACT: Lieutenant Commander James B. Donovan, Office of Search and Rescue, First Coast Guard District, (617) 223–8278.

DISCUSSION OF NOTICE: This notice implements the special local regulations in 33 CFR 100.114 (61 FR 32329; June 24, 1996). All vessels are prohibited from entering a 500 yard radius of navigable water surrounding the launch platform used in each fireworks display listed below.

Table 1—Fireworks Displays

22. First Night Fireworks
Date: January 1, 1997
Time: 12:00 a.m. to 12:13 a.m.
Location: Vicinity of New England Aquarium, Boston Harbor, MA
Lat: 42°21′38″ N Long: 071°02′48″ W (NAD 1983)

23. First Night Mystic
Date: January 1, 1997
Time: 12:00 a.m. to 12:15 a.m.

Location: Mystic River, CT
Lat: 41°22′30″ N Long: 072°00′00″W (NAD 1983)

Dated: November 27, 1996.

J.L. Linnon,

Rear Admiral, U.S. Coast Guard, Commander, First Coast Guard District.

[FR Doc. 96–32840 Filed 12–24–96; 8:45 am]

BILLING CODE 4910–14–M

---

33 CFR Part 117

[CGD07–96–064]

RIN 2115–AE 47

Drawbridge Operation Regulations; Atlantic Intracoastal Waterway, Florida

AGENCY: Coast Guard, DOT.

ACTION: Interim rule with request for comments.

SUMMARY: The Coast Guard is changing the regulations governing the operation of the J.D. Butler (Hillsboro Boulevard/SR 810) drawbridge, mile 1050.0 at Deerfield Beach, by limiting the number of openings during certain periods. This change is being made because of complaints of delays to vehicular traffic during the heavy tourist season period. This action is necessary to accommodate the needs of vehicular traffic flow and provide for the reasonable needs of navigation.

DATES: This rule is effective December 26, 1996. Comments must be received on or before February 24, 1997.

ADDRESSES: Comments may be mailed to the Commander(oan), Seventh Coast Guard District, Bridge Section, Brickell Plaza Federal Building, 909 S.e. First Avenue, Miami, Florida 33131–3050, or may be delivered to room 406 at the same address between 7:30 a.m. and 4 p.m., Monday through Friday, except Federal holidays. The telephone number is (305) 536–5117.

FOR FURTHER INFORMATION CONTACT: Mr. Brodie Rich, Project Manager, Seventh Coast Guard District, Bridge Section at (305) 536–5117.

SUPPLEMENTARY INFORMATION: This rule is being published as an interim rule and is being made effective on the date of publication. This rule is being promulgated without an NPRM because this proposed regulation change is needed immediately due to the large increase in seasonal highway traffic on Hillsboro Boulevard and the greater number of bridge openings being caused by increased vessel traffic along this reach of the Atlantic Intracoastal Waterway. This interim rule was tested with request for comments (61 FR 1524, January 22, 1996) from December 1, 1995 through February 28, 1996. The change in opening schedules helped to relieve seasonal traffic congestion without unreasonably impacting navigation. The Coast Guard did not receive any objections to the temporary deviation during the test period. The interim rule has not changed from the previously tested temporary deviation.

Request for Comments

The Coast Guard encourages interested persons to participate in this rulemaking by submitting written data, views, or arguments. Persons submitting comments should include their names and addresses, identify this rulemaking (CGD07–96–064) and the specific section of this rule to which each comment applies, and give the reason for each comment. Please submit two copies of all comments and attachments in an unbound format, no larger than 8½ by 11 inches, suitable for coping and electronic filing. Persons wanting acknowledgement of receipt of comments should enclose stamped, self-addressed postcards or envelopes.

The Coast Guard will consider all comments received during the comment period. It may change this rule or the assessment in view of the comments received.

The Coast Guard plans no public hearing. Persons may request a public hearing by writing to the District Commander at the address under **ADDRESSES.** The request should include the reasons why a hearing would be beneficial. If it determines that the opportunity for oral presentation will aid this rulemaking, the Coast Guard will hold a public hearing at a time and place announced by a later notice in the Federal Register.

Background and Purpose

The Coast Guard is changing the regulations governing the operation of the J.D. Butler (Hillsboro Boulevard/SR 810) drawbridge, mile 1050.0 at Deerfield Beach, by limiting the number of openings during certain periods. This change is being made because of complaints of delays to vehicular traffic during the heavy tourist season period. This change is being made because of complaints of delays to vehicular traffic during the heavy tourist season period. This four lane roadway which intersects with highway A–1–A, a two-lane roadway immediately east of the drawbridge, becomes extremely congested as vehicles enter and leave the popular beach area. The weekend bridge openings exacerbate this congestion especially during peak periods. This action is necessary to accommodate the needs of vehicular traffic flow and provide for the reasonable needs of the vessel navigation.

On January 30, 1996, the Coast Guard issued Public Notice 8–96 soliciting comments on the test of this regulation from December 1, 1995 through February 28, 1996. No objections were received. This interim rule is unchanged from the temporary deviation with comments published on January 22, 1996.

The interim rule reduces the number of draw openings by changing the existing 20 minute schedule to hour and half-hour openings from 7 a.m. to 6 p.m. on Friday through Sunday and federal holidays. From Monday through Thursday, from 7 a.m. to 6 p.m., the draw will continue to open on the hour, 20 minutes after the hour, and 40 minutes after the hour.

Regulatory Evaluation

This rule is not a significant regulatory action under section 3(f) of executive order 12866 and does not require an assessment of potential costs and benefits under section 6(a) (3) of that order. It has not been reviewed by the Office of Management and Budget under that order. It is not significant under the regulatory policies and procedures of the Department of Transportation (DOT) (44 FR 11040; February 26, 1979). The Coast Guard expects the economic impact of this rule to be so minimal that a full Regulatory Evaluation under paragraph 10e of the regulatory policies and procedures of DOT is unnecessary. We conclude this because of the infrequent operation of the draw, and public vessels of the United States, tugs with tows, and vessels in a situation where a delay would endanger life or property will continue to be passed through the draw at any time.

Small Entities

Under the Regulatory Flexibility Act (5 U.S.C. 601 *et seq.*), the Coast Guard must consider whether this rule will have a significant economic impact on a substantial number of small entities. ''Small entities'' may include small businesses and not-for-profit organizations that are independently owned and operated and are not dominant in their field and governmental jurisdictions with populations of less than 50,000. This rule does not require a general notice of proposed rulemaking and, therefore, is exempt from the requirements of the Act. Although this rule is exempt, the Coast Guard has reviewed it for potential impacts on small entities.

The economic impact will not affect a substantial number of small entities since tugs with tows are exempt and local excursion vessels will be able to plan their passage during the scheduled opening periods.

Therefore, the Coast Guard's position is that this rule will not have a significant economic impact on a substantial number of small entities. If, however, you think that your business or organization qualifies as a small entity and that this rule will have a significant economic impact on your business or organization, please submit a comment (see **ADDRESSES**) explaining why you think it qualifies and in what way and to what degree this rule will economically affect it.

Collection of Information

This rule contains no collection-of-information requirements under the Paperwork Reduction Act. (44 U.S.C. 3501 *et seq.*)

Federalism

The Coast Guard has analyzed the rule that under the principles and criteria contained in Executive Order 12612 and has determined that this rule does not have sufficient federalism implications to warrant the preparation of a Federalism Assessment.

Environment

The Coast Guard considered the environmental impact of this rule and concluded that under section 2.B.2.e.(32) of Commandant Instruction M16475.1B, promulgation of operating requirements or procedures for drawbridges is categorically excluded from further environmental documentation. A ''Categorical Exclusion Determination'' is available in the docket for inspection or copying where indicated under **ADDRESSES**.

List of Subjects in 33 CFR Part 117

Bridges.

Final Regulations

For the reasons set out in the preamble, the Coast Guard amends 33 CFR Part 117 as follows:

PART 117—[AMENDED]

1. The authority citation for Part 117 continues to read as follows:

Authority: 33 U.S.C. 499; 49 CFR 1.46; 33 CFR 1.05–1(g); section 117.255 also issued under the authority of Pub. L. 102–587, 106 Stat. 5039.

2. Section 117.261 is amended by revising paragraph (bb) to read as follows:

§ 117.261 Atlantic Intracoastal Waterway from St. Mary's River to Key Largo, FL.

* * * * *

(bb) Hillsboro Boulevard (SR 810) bridge, mile 1050.0 at Deerfield Beach. The draw shall open on signal; except that, from October 1 through May 31, from 7 a.m. to 6 p.m., on Monday through Thursday, the draw need open only on the hour, 20 minutes after the hour, and 40 minutes after the hour; and from 7 a.m. to 6 p.m., on Friday through Sunday and federal holidays, the draw need open only on the hour and half-hour.

* * * * *

Dated: December 9, 1996.

J.W. Lockwood,

Rear Admiral, U.S. Coast Guard, Commander, Seventh Coast Guard District.

[FR Doc. 96–32847 Filed 12–24–96; 8:45 am]

BILLING CODE 4910–14–M

---

33 CFR Part 165

[COTP CHARLESTON 96–072]

RIN 2115–AA97

Safety Zone Regulations; Back River and Foster Creek, Charleston, SC

AGENCY: Coast Guard, DOT.

ACTION: Final rule.

SUMMARY: The Coast Guard is establishing a temporary safety zone for the U.S. Border Patrol Training Academy Small Arms Range at the Charleston Naval Weapons Station. The safety zone will become effective at 12:01 a.m. Eastern Standard Time (EST) on December 1, 1996 and will terminate at 12 a.m. EST on February 1, 1997. This safety zone is needed to protect vessels and personnel from safety hazards associated with small arms fire and is an extension of a previously published rule [COTP Charleston 96–052].

EFFECTIVE DATE: The regulation becomes effective at 12:01 a.m. EST on December 1, 1996 and will terminate at 12 a.m. EST on February 1, 1997 unless terminated earlier by the Captain of the Port.

FOR FURTHER INFORMATION CONTACT: Lieutenant Jeffrey T. Carter, Coast Guard Marine Safety Office Charleston, at (803) 720–7701, between the hours of 7:30 a.m. and 4:00 p.m. EDT, Monday through Friday, except federal holidays.

SUPPLEMENTARY INFORMATION: In accordance with 5 U.S.C. 533, a notice of proposed rulemaking was not published for this regulation and good cause exists for making it effective in less than 30 days from the date of publication. Following normal rulemaking procedures would have been impractical. The information concerning the need for an extension to the previously published rule was not received with sufficient time to publish proposed rules prior to the event or to provide for a delayed effective date.

Discussion of Regulation

The temporary safety zone, previously published as [COTP] Charleston 96–052], being extended for an additional two months for the U.S. Border Patrol Training Academy Small Arms Range at Charleston Naval Weapons Station. The safety zone will become effective at 12:01 a.m. Eastern Standard Time (EST) on December 1, 1996 and will terminate at 12 a.m. EST on February 1, 1997. This safety zone is needed to protect vessels and personnel from safety hazards associated with small arms fire.

The safety zone will consist of those portions of unnamed tributaries of the Back River and Foster Creek that are generally described as lying south of the main shoreline and extending southward to the northern shoreline of Big Island (U.S. Naval Reservation). Specifically, the area beginning at a point on the main shoreline, which is the northern shore of an unnamed tributary of Back river at position 32–59.19N, 079–56.52W, southwesterly to a point on or near the northern shoreline of Big Island at position 32–59.11N, 079–56;.59W; thence northwesterly to a point on the main shoreline, which is the northern shore of an unnamed tributary of Foster Creek, at position 32–59.16N, 079–57.11W; thence easterly along the main shoreline, which is the northern shore of the unnamed tributaries of Foster Creek and Back River, back to the point beginning at position 32–59.19N, 079–56.52W. All coordinates referenced use datum; NAD 1983. The Captain of the Port has restricted vessel operations in this safety zone. No persons, vehicles or vessels will be allowed to enter or operate within this zone, except as may be authorized by the Captain of the Port, Charleston, South Carolina. This regulation is issued pursuant to 33 U.S.C. 1231, as set out in the authority citation of Part 165.

Regulatory Evaluation

This regulation is not a significant regulatory action under section 3(f) of Executive Order 12866 and does not require an assessment of potential costs and benefits under section 6(a)(3) of that order. It has been exempted from review by the Office of Management and Budget under that order. It is not significant under the regulatory policies and procedures of the Department of

Transportation (DOT) (44 FR 11040; February 26, 1979). The Coast Guard expects the economic impact of this rule to be so minimal that a full Regulatory Evaluation under paragraph 10e of the regulatory policies and procedures of DOT is unnecessary. Maritime traffic will not be significantly impacted because of the small number of vessels expected to need this safety zone, and the limited area affected by the zone.

Small Entities

Under the Regulatory Flexibility Act (5 U.S.C. 601 *et seq.*), the Coast Guard must consider whether this proposal will have a significant economic impact on a substantial number of small entities. For reasons set forth in the above Regulatory Evaluation, the Coast Guard certifies under 5 U.S.C. 605(b) for the reason stated above that this proposal, if adopted, would not have a significant economic impact on a substantial number of small entities.

Collection of Information

This rule contains no collection-of-information requirements under the Paperwork Reduction Act (44 U.S.C. 3501 *et seq.).*

Federalism

The Coast Guard has analyzed this proposal under the principles and criteria contained in Executive Order 12612 and has determined that this proposed rule does not have sufficient Federalism implications to warrant the preparation of a Federalism Assessment.

Environmental Assessment

The Coast Guard has considered the environmental impact of this rule and concluded that, under paragraph 2.B.2 of Commandant Instruction M16475.1B (as revised by 59 FR 38654, July 29, 1994), this rule is categorically excluded from further environmental documentation. Pursuant to COMDTINST M16475.1B, paragraph (34)(g), an environmental determination has been made that this rule will not significantly affect the environment. A categorical exclusion determination is on file in the rulemaking docket and is available for inspection or copying at the address shown above in the paragraph entitled ''For Further Information Contact''.

List of Subject in 33 CFR Part 165

Harbors, Marine safety, Navigation (water), Reporting and recordkeeping requirements, Safety measures, Waterways.

Regulation

In consideration of the foregoing, subpart C of part 165 of title 33, Code of Federal Regulations, the Coast Guard amends as follows:

PART 165—[AMENDED]

1. The authority citation for part 165 continues to read as follows:

Authority: 33 U.S.C. 1231; 50 U.S.C. 191; 33 CFR 1.05–1(g), 6.04–1, 6.04–6, and 160.5; 49 CFR 1.46.

2. A new section 165.T96–072 is added to read as follows:

§ 165.T96–072 Safety Zone; Back River and Foster Creek, Charleston, SC.

(a) *Regulated area.* Naval Weapons Station/U.S. Border Patrol Training Academy Small Arms Range. The following area is a safety zone: those portions of unnamed tributaries of the Back River and Foster Creek lying south of the main shoreline and extending southward to the northern shoreline of Big Island (U.S. Naval Reservation) beginning at a point on the main shoreline at position 32–59.19N, 079–56.52W; then to 32–59.11N, 079–56.59W; then to 32–59.16N, 079–57.11W; then back to the point of beginning. All coordinates referenced use datum: NAD 1983.

(b) *Effective dates.* This regulation is effective at 12:01 a.m. Eastern Standard Time (EST) on December 1, 1996 and will terminate at 12 a.m. EST on February 1, 1997 unless sooner terminated by the Captain of the Port, Charleston, SC.

(c) *Regulations.* In accordance with the general regulations in § 165.23 of the this part, entry into the zone is subject to the following requirements:

(1) This safety zone is closed to all persons, vehicles and vessels, except as may be permitted by the Captain of the Port.

(2) Persons desiring to enter or operate vehicles or vessels within the safety zone shall contact the Captain of the Port to obtain permission to do so. Persons given permission to enter or operate in the safety zone shall comply with all directions given them by the Captain of the Port.

(3) The Captain of the Port may be contacted via the Coast Guard Group Charleston operations center at (803) 724–7619 or VHF–FM channel 16.

Dated: November 27, 1996.

M.J. Pontiff,

Commander, U.S. Coast Guard, Captain of the Port, Charleston, South Carolina.

[FR Doc. 96–32835 Filed 12–24–96; 8:45 am]

BILLING CODE 4910–14–M

DEPARTMENT OF VETERANS AFFAIRS

38 CFR Part 3

RIN 2900–AI43

Adjudication Regulations; Miscellaneous

AGENCY: Department of Veterans Affairs.

ACTION: Final rule.

SUMMARY: This document amends adjudication regulations by removing obsolete sections, updating authority citations, and making other nonsubstantive changes.

EFFECTIVE DATE: December 26, 1996.

FOR FURTHER INFORMATION CONTACT: John Bisset, Jr., Consultant, Regulations Staff, Compensation and Pension Service, Veterans Benefits Administration, 810 Vermont Avenue, NW, Washington, DC 20420, telephone (202) 273–7230.

SUPPLEMENTARY INFORMATION: 38 CFR 3.107 contains requirements for processing benefit awards where claims have not been filed by or on behalf of all dependents who may be entitled to monetary benefits. The heading of § 3.107, ''Awards where all dependents do not apply'', does not accurately reflect its content and we are revising it to read ''Awards where not all dependents apply''.

38 CFR 3.315(c)(1) (i) and (ii) require basic eligibility determinations under certain circumstances when veterans apply for education benefits under 38 U.S.C. Chapter 34 and Chapter 32, respectively. Since 38 U.S.C. Chapter 34 expired on December 31, 1989, § 3.315(c)(1)(i) is obsolete and we have removed it. The last date that a veteran seeking benefits under 38 U.S.C. Chapter 32 could have entered active duty and not have the two-year service requirement found in 38 U.S.C. 5303A apply was October 16, 1981. If such a veteran also did not meet the 181-day service requirement, that veteran would have been released from active duty before April 16, 1982, and, if found eligible for benefits under 38 U.S.C. Chapter 32, would have had the period of eligibility expire ten years from the date of release from active duty, or no later than April 16, 1992. If such a veteran made a current application for chapter 32 educational benefits, there would be no need for rating board referral in order to adjudicate that claim. Section 3.315(c)(1)(ii) is therefore obsolete and we have removed it.

The references in § 3.315(c)(4) to Post-Korean and Vietnam era service were needed to administer § 3.315(c)(1)(i). Since § 3.315(c)(1)(i) has been removed,

there is no longer any need in § 3.315(c)(4) to refer to service between January 31, 1955, and August 5, 1964, and during the Vietnam era. We have revised § 3.315(c)(4) accordingly. As there is no longer any need to refer to 38 U.S.C. 3452(a) in the authority citation following § 3.315(c), we have removed that reference. Also, that authority citation contains an incorrect reference to ''10 U.S.C. 2133(b)''. The correct reference is ''10 U.S.C. 16133(b)'', and we have revised the reference accordingly. Sections 3.315(c)(3)(i) and 3.1000(g) contain incorrect references to ''10 U.S.C. Chapter 106''. The correct reference is ''10 U.S.C. Chapter 1606'', and we have revised the references accordingly.

38 CFR 3.400(d) is being deleted because it merely restates a statute and its provisions have become obsolete.

When the Social Security Administration (SSA) has notified the Department of Veterans Affairs (VA) that payments to any individual have been authorized pursuant to section 217(b)(2) of the Social Security Act (42 U.S.C. 417(b)(2)), 38 CFR 3.709 requires VA to notify SSA of any determination that death pension, compensation, or dependency and indemnity compensation is payable to any dependent of the veteran. Section 5117 of Pub. L. 101–508 revised 42 U.S.C. 417(b)(2) so that it applied only to individuals applying for SSA benefits before the end of the 18-month period after the month in which Pub. L. 101–508 was enacted. Since that 18-month period expired on June 1, 1992, 38 CFR 3.709 is obsolete and we have removed it.

38 CFR 3.712(a) concerns the election of improved pension by Spanish-American War veterans. However, there are no Spanish-American War veterans currently receiving monetary benefits from VA. Consequently, § 3.712(a) is no longer required and is removed. Since the remainder of § 3.712 concerns surviving spouses only, we have revised the heading to read ''Improved pension elections; surviving spouses of Spanish-American War veterans'', and redesignated paragraphs (b)(1) and (b)(2) as paragraphs (a) and (b), respectively.

Pub. L. 95–588 completely revised the statutory framework for VA pension benefits effective January 1, 1979. 38 CFR 3.961 states that pension claims pending on December 31, 1978, will be adjudicated under title 38 U.S.C. as in effect on December 31, 1978, and that pension claims filed after December 31, 1978, will be adjudicated under title 38 U.S.C. as in effect on January 1, 1979 or thereafter. 38 CFR 3.962 states that claims filed after December 31, 1978, will generally be adjudicated under title 38 U.S.C. as in effect on December 31, 1978, if entitlement is based on permanent and total disability that existed or death that occurred prior to January 1, 1979.

Since such claims have long since been adjudicated, §§ 3.961 and 3.962 are obsolete and we have removed them.

This final rule makes nonsubstantive changes. Accordingly, this final rule is promulgated without regard to the notice-and-comment and effective-date provisions of 5 U.S.C. 553.

Because no notice of proposed rulemaking was required in connection with the adoption of this final rule, no regulatory flexibility analysis is required under the Regulatory Flexibility Act (5 U.S.C. 601–612). Even so, the Secretary hereby certifies that this final rule will not have a significant economic impact on a substantial number of small entities as they are defined in the Regulatory Flexibility Act. The final rule only makes nonsubstantive changes.

The Catalog of Federal Domestic Assistance program numbers are 64.104, 64.105, 64.109, and 64.110.

List of Subjects in 38 CFR Part 3

Administrative practice and procedure, Claims, Disability benefits, Health care, Pensions, Veterans, Vietnam.

Approved: November 21, 1996.

Jesse Brown,

Secretary of Veterans Affairs.

For the reasons set forth in the preamble, 38 CFR part 3 is amended as follows:

PART 3—ADJUDICATION

Subpart A—Pension, Compensation, and Dependency and Indemnity Compensation

1. The authority citation for part 3, subpart A continues to read as follows:

Authority: 38 U.S.C. 501(a), unless otherwise noted.

2. In § 3.107, the section heading is revised to read as follows:

§ 3.107 Awards where not all dependents apply.

* * * * *

§ 3.315 [Amended]

3. In § 3.315, remove paragraphs (c)(1)(i) and (c)(1)(ii) are removed, and paragraphs (c)(1)(iii) and (c)(1)(iv) are redesignated as paragraphs (c)(1)(i) and (c)(1)(ii), respectively. Paragraph (c)(3)(i) is amended by removing ''10 U.S.C. chapter 106'' and adding, in its place, ''10 U.S.C. Chapter 1606''; and paragraph (c)(4) is amended by removing ''after January 31, 1955, and before August 5, 1964, or after May 7, 1975, and § 3.306(b) based on service rendered during the Vietnam era'' and adding, in its place, ''after May 7, 1975''; and the authority citation following paragraph (c)(4) is revised to read as follows:

§ 3.315 Basic eligibility determinations; dependents, loans, education.

* * * * *

(Authority: 38 U.S.C. 3011(a)(1)(A)(ii), 3012(b)(1), 3202(1)(A), 10 U.S.C. 16133(b))

§ 3.400 [Amended]

4. In § 3.400 paragraph(d) is removed.

§ 3.709 [Removed]

5. Section 3.709 is removed.

§ 3.712 [Amended]

6. In § 3.712, paragraph (a) and the heading for paragraph (b) are removed, paragraphs (b)(1) and (b)(2) are redesignated as paragraphs (a) and (b), respectively; the section heading is revised to read as follows:

§ 3.712 Improved pension elections; surviving spouses of Spanish-American War veterans.

* * * * *

§ 3.961 [Removed]

7. Section 3.961 is removed.

§ 3.962 [Removed]

8. Section 3.962 is removed.

§ 3.1000 [Amended]

9. In § 3.1000, paragraph(g) is amended by removing ''10 U.S.C. chapter 106'', and adding, in its place, ''10 U.S.C. chapter 1606''.

[FR Doc. 96–32726 Filed 12–24–96; 8:45 am]

BILLING CODE 8320–01–P

ENVIRONMENTAL PROTECTION AGENCY

40 CFR Part 9

[FRL–5670–1]

OMB Approval Numbers Under the Paperwork Reduction Act

AGENCY: Environmental Protection Agency (EPA).

ACTION: Technical amendment.

SUMMARY: In compliance with the Paperwork Reduction Act, this document displays the Office of Management and Budget (OMB) control numbers issued under the Paperwork Reduction Act (PRA) for the Criteria for Classification of Solid Waste Disposal Facilities and Practices.

EFFECTIVE DATE: December 26, 1996.

FOR FURTHER INFORMATION CONTACT: Paul Cassidy of the Industrial and Extractive Waste Branch, Office of Solid Waste at (703) 308–7281.

SUPPLEMENTARY INFORMATION: EPA is today amending the table of currently approved information collection request (ICR) control numbers issued by OMB for various regulations. Today's amendment updates the table to accurately display those information requirements promulgated under the Criteria for Classification of Solid Waste Disposal Facilities and Practices which appeared in the Federal Register on July 1, 1996 (61 FR 34252). The affected regulations are codified at 40 CFR Part 257—Subpart B. EPA will continue to present OMB control numbers in a consolidated table format to be codified in 40 CFR part 9 of the Agency's regulations, and in each CFR volume containing EPA regulations. The table lists the section numbers with reporting and recordkeeping requirements, and the current OMB control numbers. This display of the OMB control number(s) and its(their) subsequent codification in the Code of Federal Regulations satisfies the requirements of the Paperwork Reduction Act (44 U.S.C. 3501 *et seq.*) and OMB's implementing regulations at 5 CFR 1320.

This ICR was previously subject to public notice and comment prior to OMB approval. As a result, EPA finds that there is ''good cause'' under section 553(b)(B) and (d)(3) of the Administrative Procedure Act (5 U.S.C. 553(b)(B) and (d)(3)) to amend this table without further notice and comment. Due to the technical nature of the table, further notice and comment would be unnecessary.

List of Subjects in 40 CFR Part 9

Environmental Protection, reporting and recordkeeping requirements.

Dated: November 25, 1996.

Elliott P. Laws,

Assistant Administrator Office of Solid Waste and Emergency Response.

For the reasons set out in the preamble 40 CFR part 9 is amended as follows:

1. The authority citation for part 9 continues to read as follows:

Authority: 7 U.S.C. 135 *et seq.*, 136–136y; 15 U.S.C. 2001, 2003, 2005, 2006, 2601–2671; 21 U.S.C. 331j, 346a, 348; 31 U.S.C. 9701; 33 U.S.C. 1251 *et seq.*, 1311, 1313d, 1314, 1321, 1326, 1330, 1344, 1345 (d) and (e), 1361; E.O. 11735, 38 FR 21243, 3 CFR, 1971–1975 Comp. p. 973; 42 U.S.C. 241, 242b, 243, 246, 300f, 300g, 300g–1, 300g–2, 300g–3, 300g–4, 300g–5, 300g–6, 300j–1, 300j–2, 300j–3, 300j–4, 300j–9, 1857 *et seq.*, 6901–6992k, 7401–7671q, 7542, 9601–9657, 11023, 11048.

2. In Section 9.1, the table is amended by adding the new entries under the indicated hearing to read as follows:

§ 9.1 OMB approvals under the Paperwork Reduction Act.

* * * * *

40 CFR Citation	OMB Control No.
* * * * *	
Criteria for Classification of Solid Waste Disposal Facilities and Practices	
257.24	2050–0154
257.25	2050–0154
257.27	2050–0154
* * * * *	

[FR Doc. 96–32793 Filed 12–24–96; 8:45 am]

BILLING CODE 6560–50–M

GENERAL SERVICES ADMINISTRATION

41 CFR Part 301–6

[FTR Amendment 55]

RIN 3090–AG23

Federal Travel Regulation; Repeal of Long-Distance Telephone Call Certification Requirement

AGENCY: Office of Governmentwide Policy, GSA.

ACTION: Final rule.

SUMMARY: This final rule amends the Federal Travel Regulation (FTR) to remove the long-distance telephone call certification requirement. This amendment will reduce agency administrative costs by easing the processing of reimbursement claims.

DATES: This final rule is effective March 22, 1997, and applies for travel (including travel incident to a change of official station) performed on or after March 22, 1997.

FOR FURTHER INFORMATION CONTACT: Robert A. Clauson, Travel and Transportation Management Policy Division (MTT), Washington, DC 20405, telephone 202–501–0299.

SUPPLEMENTARY INFORMATION: A multi-agency travel reinvention task force was organized in August 1994 under the auspices of the Joint Financial Management Improvement Program (JFMIP) to reengineer Federal travel rules and procedures. The task force developed 25 recommended travel management improvements published in a JFMIP report entited *Improving Travel Management Governmentwide*, dated December 1995. On September 23, 1996, the President signed into law the Federal Employee Travel Reform Act of 1996 (Public Law 104–201), which included 8 legislative changes recommended by the JFMIP to improve travel and relocation.

This amendment implements section 1721 of the Act which eliminates the requirement in 31 U.S.C. 1348(b) that the agency head certify each long-distance telephone call as necessary in the interest of the Government.

The General Services Administration (GSA) has determined that this rule is not a significant regulatory action for the purposes of Executive Order 12866 of September 30, 1993. This final rule is not required to be published in the Federal Register for notice and comment. Therefore, the Regulatory Flexibility Act does not apply. This rule also is exempt from congressional review prescribed under 5 U.S.C. 801 since it relates solely to agency management and personnel.

List of Subjects in 41 CFR Part 301–6

Government employees, Travel, Travel allowances, Travel and transportation expenses.

For the reasons set out in the preamble, 41 CFR part 301–6 is amended as follows:

PART 301–6—COMMUNICATIONS SERVICES

1. The authority citation for part 301–6 continues to read as follows:

Authority: 5 U.S.C. 5707.

§ 301–6.4 [Amended]

2. Section 301–6.4 is amended by removing the cite ''(31 U.S.C. 1348(b))'' in paragraph (c), and by removing the reference ''Federal Information Resources Management Regulation (FIRMR) (41 CFR 201–21.600 through 201–21.602)'' and adding in its place the reference ''Federal Property Management Regulations (FPMR), 41 CFR 101–35.201''.

§ 301–6.5 [Reserved]

3. Section 301–6.5 is removed and reserved.

Dated: November 27, 1996.

David J. Barram,

Acting Administrator of General Services.

[FR Doc. 96–32713 Filed 12–24–96; 8:45 am]

BILLING CODE 6820–34–M

DEPARTMENT OF DEFENSE

48 CFR Parts 249 and 252

[DFARS Case 96–D321]

Defense Federal Acquisition Regulation Supplement; Downsizing Notice

AGENCY: Department of Defense (DoD).

ACTION: Final rule.

SUMMARY: The Director of Defense Procurement has issued a final rule amending the Defense Federal Acquisition Regulation Supplement (DFARS) to implement Section 825 of the National Defense Authorization Act for Fiscal Year 1997 (Public Law 104–201). Section 825 repeals the requirements for the Secretary of Defense to notify the Secretary of Labor if a modification or termination for convenience of a major defense contract or subcontract will have a substantial impact on employment.

EFFECTIVE DATE: December 26, 1996.

FOR FURTHER INFORMATION CONTACT: Mr. Richard G. Layser, PDUSD (AT&T) DP (DAR), Defense Acquisition Regulations Council, IMD 3D139, 3062 Defense Pentagon, Washington, DC 20301–3062. Telephone (703) 602–0131; telefax (703) 602–0350. Please cite DFARS Case 96–D321 in all correspondence related to this issue.

SUPPLEMENTARY INFORMATION:

A. Background

Section 825 of the National Defense Authorization Act for Fiscal Year 1997 (Public Law 104–201) repeals Sections 4101 and 4201 of the National Defense Authorization Act for Fiscal Year 1991 (Public Law 101–510; 10 U.S.C. 2391 note). This final rule removes the DFARS language that implemented Sections 4101 and 4201.

C. Regulatory Flexibility Act

This final rule does not constitute a significant revision within the meaning of FAR 1.501 and Public Law 98–577, and publication for public comment is not required. However, comments from small entities concerning the affected DFARS subparts will be considered in accordance with 5 U.S.C. 610. Such comments should cite DFARS Case 96–D321 in correspondence.

D. Paperwork Reduction Act

This final rule removes the information collection requirement previously approved by the Office of Management and Budget (OMB) under OMB Control Number 0704–0327.

List of Subjects in 48 CFR Parts 249 and 252

Government procurement.

Michele P. Peterson,

Executive Editor, Defense Acquisition Regulations Council.

Therefore, 48 CFR Parts 249 and 252 are amended as follows:

1. The authority citation for 48 CFR Parts 249 and 252 continues to read as follows:

Authority: 41 U.S.C. 421 and 48 CFR Chapter 1.

PART 249—TERMINATION OF CONTRACTS

249.102 [Removed]

2. Section 249.102 is removed.

249.7002 [Removed and Reserved]

3. Section 249.7002 is removed and reserved.

PART 252—SOLICITATION PROVISIONS AND CONTRACT CLAUSES

252.249–7001 [Removed and Reserved]

4. Section 252.249–7001 is removed and reserved.

[FR Doc. 96–32667 Filed 12–24–96; 8:45 am]

BILLING CODE 5000–04–M

DEPARTMENT OF TRANSPORTATION

Office of the Secretary

49 CFR Part 1

[OST Docket No. 1; Amdt. 1–281]

Organization and Delegation of Powers and Duties; Delegation to the Commandant; United States Coast Guard

AGENCY: Office of the Secretary, DOT.

ACTION: Final rule.

SUMMARY: The Secretary of Transportation is delegating to the Commandant, United States Coast Guard, the authority contained in 46 U.S.C. Chapter 33, pertaining to the delegation of authority to classification societies to review and approve commercial vessel plans and conduct commercial vessel inspections and examinations. In order that the Code of Federal Regulations reflect this delegation, a change is necessary.

EFFECTIVE DATE: December 26, 1996.

FOR FURTHER INFORMATION CONTACT: LCDR George P. Cummings, Marine Safety and Environmental Protection (G–MSE–1), (202) 267–2997, U.S. Coast Guard, 2100 Second Street, SW, Washington, DC 20593; or Ms. Gwyneth Radloff, Office of the General Council, C–50, (202) 366–9305, Department of Transportation, 400 Seventh Street, SW, Washington, DC 20590.

SUPPLEMENTARY INFORMATION: Public Law 104–324 is the Coast Guard Authorization Act of 1996, (hereafter referred to as the Act). Section 3316 of title 46, U.S. Code, was amended by the Act to allow the Secretary to delegate to the American Bureau of Shipping or another classification society the authority to approve vessel plans, conduct vessel inspections, and issue a certificate of inspection and other related documents. The Secretary of Transportation is delegating his authority under the Act to the Commandant of the Coast Guard.

This rule adds a specific delegation of authority to 49 CFR 1.46, thus amending the codification to reflect the Secretarial delegation of authority to the Commandant of the Coast Guard.

Since this amendment relates to departmental management, organization, procedure, and practice, notice and comment on it are unnecessary under 5 U.S.C. 553(b). Further, since the amendment expedites the Coast Guard's ability to meet the needs of the U.S. maritime industry, the Secretary finds good cause under 5 U.S.C. 553(d)(3) for the final rule to be effective on the date of publication in the Federal Register.

List of Subjects in 49 CFR Part 1

Authority delegations (Government agencies), Organization and functions (Government agencies).

In consideration of the foregoing, Part 1 of Title 49, Code of Federal Regulations, is amended as follows:

PART 1—[AMENDED]

1. The authority citation for Part 1 continues to read as follows:

Authority: 49 U.S.C. 322; Pub. L. 101–552, 28 U.S.C. 2672, 31 U.S.C. 3711(a)(2).

2. Section 1.46 is amended by adding a new paragraph (ddd) to read as follows:

§ 1.46 Delegations to Commandant of the Coast Guard.

* * * * *

(ddd) Carry out the functions and exercise the authority vested in the Secretary by 46 U.S. Code Chapter 33 pertaining to the delegation of authority to classification societies to review and approve commercial vessel plans and conduct commercial vessel inspections and examinations, as enacted by the Coast Guard Authorization Act of 1996, title 46, section 3316 (classification

societies), Pub. L. 104–324, 110 Stat. 3901.

Issued at Washington, DC, this 18th day of December, 1996.

Federico Peña,

Secretary of Transportation.

[FR Doc. 96–32723 Filed 12–24–96; 8:45 am]

BILLING CODE 4910–62–P

National Highway Traffic Safety Administration

49 CFR Part 572

[Docket No. 74–14; Notice 104]

RIN 2127–AF41

Anthropomorphic Test Dummy; Occupant Crash Protection

AGENCY: National Highway Traffic Safety Administration (NHTSA), DOT.

ACTION: Final rule.

SUMMARY: This rule amends the specifications for the Hybrid III test dummy. The dummy is specified by the agency for use in compliance testing under Standard No. 208, *Occupant Crash Protection.* The amendments make minor modifications of the femurs and ankles to improve biofidelity. While there may be some minimal effect on HIC, chest, and femur test data, the improvement in data quality and reliability will more than offset these differences and make the dummy more useful in tests at more severe impact conditions of some research and vehicle development programs. This rule does not include any amendments based on a proposal to adopt a neck shield for the Hybrid III test dummy.

DATES: *Effective Date:* The amendments made in this rule are effective June 25, 1997.

Incorporation by Reference Date: The incorporation by reference of the material listed in this document is approved by the Director of the Federal Register as of June 25, 1997.

Petition Date: Any petitions for reconsideration must be received by NHTSA no later than February 10, 1997.

ADDRESSES: Any petitions for reconsideration should refer to the docket and notice number of this notice and be submitted to: Administrator, National Highway Traffic Safety Administration, 400 Seventh Street, SW, Washington, DC 20590.

FOR FURTHER INFORMATION CONTACT: The following persons at the National Highway Traffic Safety Administration, 400 Seventh Street, SW, Washington, DC 20590:

For non-legal issues: Mr. Stanley Backaitis, Office of Crashworthiness Standards, NPS–10, telephone (202) 366–4912, facsimile (202) 366–4329, electronic mail ''sbackaitis@nhtsa.dot.gov''.

For legal issues: Mr. Steve Wood, Office of the Chief Counsel, NCC–20, telephone (202) 366–2992, facsimile (202) 366–3820, electronic mail ''swood@nhtsa.dot.gov''.

SUPPLEMENTARY INFORMATION: Standard No. 208, *Occupant Crash Protection,* currently permits the use of either the Hybrid III test dummy or the older Hybrid II dummy in compliance testing. Effective September 1, 1997, however, the Standard will specify the use of a single dummy, the Hybrid III dummy. The specifications for the Hybrid III dummy appear in subpart E of 49 CFR part 572.

The Hybrid III dummy has been widely used in recent years. In addition to increasingly using the dummy for Standard No. 208 certification purposes, many manufacturers use this advanced dummy in their research and developmental testing. In addition, NHTSA uses the Hybrid III dummy in its New Car Assessment Program (NCAP).

In petitions for rulemaking, vehicle manufacturers identified three areas in which they believe the dummy should be improved. These areas are (1) increased ankle dorsiflexion motion, (2) use of a soft foam neck shield, and (3) increased femur flexion ranges. The first two of these areas were identified by Ford in a petition submitted in March 1991. The third was identified in petitions submitted by Toyota, Honda, and Nissan between September 1993 and April 1994.

NHTSA granted each of the petitions for rulemaking and conducted extensive analysis, including a test program, of the issues raised in the petitions. Among other actions, the agency consulted with the Society of Automotive Engineers (SAE) Human Biomechanics and Simulations Committee.

Subsequently, on June 30, 1995, the agency published a Notice of Proposed Rulemaking (NPRM) proposing minor modifications of the femurs and ankles of the Hybrid III dummy (60 FR 34213). The NPRM also proposed to specify the use of a neck shield. The NPRM stated that the proposed changes would have no effect on Standard No. 208 test results, but would make the Hybrid III test dummy more useful for use in research and vehicle development programs which involve more severe impact conditions.

The agency received 17 responses to the NPRM. In general, commenters supported the proposed amendments to the femurs and ankles, but not the use of a neck shield. All comments were considered and the most significant ones are addressed below.

Femur/Hip Modifications

In the NPRM, the agency proposed modifications to the femurs at the hip joint to assure the same motion range between the right and left femurs and to prevent metal to metal contact or hard contact impacts from occurring with the pelvis bone at maximum femur flexion. In addition, the agency proposed the addition of a calibration test for hip joint-femur flexion. None of the commenters disagreed with these proposals. However, some commenters raised some issues related to them.

Advocates for Highway and Auto Safety (Advocates) supported the goal of the proposed changes, but questioned whether there would be trade-offs among the various injury measures that affected safety. Since the NPRM was published, the agency has conducted additional testing to evaluate the effects of hip joint changes on the dummy response. This evaluation showed a slight decrease (up to 10%) in passenger chest G's, and a slight increase (up to 5%) in driver chest G's. Head Injury Criteria (HIC) showed an increase of more than 10% in some tests; however, this is not of great concern because it occurred only when there was a low baseline HIC (15% to 60% of the maximum limit). Despite these minor differences, the agency believes the effects of the modifications are positive overall because they will produce more consistent and less spike-contaminated impact responses. These improvements will result from the elimination of non-uniform ranges of motions between the left and right legs, and from the prevention of metallic impacts between the femur shafts and the pelvis.

Two commenters, Ford and Chrysler, supported the proposal but also stated that load transmission from the femurs and hips through the lumbar spine is not biofidelic. Neither commenter provided details regarding how this alleged problem should be addressed. Because the dummy is constructed from different materials than the human body, it can never be completely biofidelic. This final rule addresses identified problems concerning inadequate femur flexion and possible metal-to-metal contacts. As such, the final rule increases the biofidelity of the dummy. Consideration of other areas of biofidelity should be the subject of future research.

Four commenters (Ford, General Motors (GM), Toyota, and, Transportation Research Center (TRC))

raised issues concerning femur loading level during the calibration test. NHTSA proposed a 50 ft-lbf torque maximum between 20 and 34 degrees of rotation and a 250 ft-lbf torque maximum between 44 and 52 degrees. Toyota commented that the 250 ft-lbf loading level was too high and could prematurely damage the femur bumper. GM and TRC also commented that the level was too high and recommended a level of 150 ft-lbf. Comments were also received on the range of femur rotation during the calibration test.

After reviewing these comments, the agency has decided to modify the calibration test. NHTSA agrees that the femur should be capable of flexion rotation of at least 52 degrees without the bumper. But it also agrees that, in bumper loading tests, 250 ft-lbf can compress the bumper to the extent that it could begin to fall apart. The new requirements specify that a load of 50 ft-lbf cannot be exceeded before the femur rotates 36 degrees, and that a load of 150 ft-lbf must be reached after the femur rotates 46 degrees, and before it rotates 52 degrees.

Several commenters recommended adoption of the SAE test procedure for the hip joint (SAE Engineering Aid 23—Final Draft (August 1995)). Because only limited numbers of vehicle manufacturers have experience with this procedure, NHTSA believes that it would be desirable to review it further to determine its objectivity and acceptability. The agency will review the procedure and propose it in a future rulemaking, if appropriate.

The amendments adopted in this final rule include revisions to the upper bone parts (drawings 78051–108, –109) and the addition of bolt-on urethane bumpers (drawings 78051–498–1, –2). The right and left femurs are redesigned to allow identical motion ranges in the dorsiflexion direction. The cost of replacement femurs is estimated at approximately $2,400 per dummy.

Foot/Ankle Modifications

In the NPRM, the agency proposed to modify the ankle to allow 45 degrees of dorsiflexion instead of the current 30 degrees. With one exception, commenters supported this proposal. The exception was Advocates, which expressed concern that the change could alter dummy response and allow increased injuries. Agency research shows no measurable change in dummy response during Standard No. 208 testing as a result of the increased dorsiflexion. Therefore, NHTSA is adopting the changes.

The changes to the ankle rotation to allow increased dorsiflexion necessitate relocation of the center of the ankle joint and a rearrangement of the foot. The modifications to the foot and ankle involve the relocation of the ankle ball joint and associated revisions of the foot skeletal structure, reorientation of the foot plate, and a revised casting of the foot flesh, while retaining essentially the same exterior surfaces. The modified drawings are 78051–600, –601, and –611, and 7310–1, and –2. The cost of a modified foot is $305, or $610 per dummy. The cost of a bumper and its retainer washer is $200 per foot, or $400 per dummy.

Neck Shield

Last, in response to the Ford petition, the agency proposed to specify the use of a neck shield for the Hybrid III dummy. A number of commenters questioned the need for the neck shield, stating that they had not experienced problems that necessitated its use. In addition, commenters questioned whether the design of the neck shield would adversely affect the head/neck interaction.

As indicated in the NPRM, NHTSA has no data indicating that a neck shield is necessary, but was willing to consider specifying its use to alleviate alleged problems if there were no adverse effects. No data was submitted to indicate that a neck shield cannot have the undesirable consequences some commenters suggested. Given this, the agency is not specifying a neck shield for the Hybrid III dummy at this time. NHTSA notes that the dummy specified in Part 572 is the dummy that NHTSA must use in its compliance testing. However, manufacturers are free to use another dummy or even another test when certifying their vehicles, provided they can demonstrate that they have exercised due care in certifying compliance. Therefore, a manufacturer could use the neck shield without it being specified by NHTSA. NHTSA will continue to monitor this issue and would reconsider adopting a specification if a need was demonstrated.

Effective Date

The agency proposed to make the amendments effective 30 days after publication of a final rule. TRW, Ford, GM and Nissan support the proposed effective date. Honda suggested a 90 day effective date, while Volkswagen suggested 180 days. Dummy manufacturers state that some dummy users have already begun using replacement parts for the femur/hip modifications. They also noted that users should be able to obtain any new femur within 30 days, and modified foot/ankle assemblies in less than eight weeks.

To provide maximum flexibility, NHTSA has decided to make this rule effective 180 days following the date of publication. All manufacturers said they would be able to comply with this effective date. NHTSA will begin using the modified dummy for all vehicles manufactured after this date. Manufacturers, of course, may begin using the modified components for their purposes prior to that date.

Other Comments

Commenters also raised issues concerning a lower lumbar spine load cell and the access holes in the pelvis assembly. These issues are outside the scope of the NPRM and cannot be addressed in this final rule. However, NHTSA will consider these comments in a future agency rulemaking.

Rulemaking Analyses and Notices

Executive Order 12866 and DOT Regulatory Policies and Procedures

NHTSA has considered the impact of this rulemaking action under E.O. 12866 and the Department of Transportation's regulatory policies and procedures. This rulemaking document was not reviewed under E.O. 12866, ''Regulatory Planning and Review.'' This action has been determined to be not ''significant'' under the Department of Transportation's regulatory policies and procedures. Replacement costs for existing dummies would be approximately $3,410. These changes are being made to allow manufacturers to use the same dummy for research purposes as they use for compliance certification purposes. There will be no impact on the ability of manufacturers to comply with NHTSA's standards.

Regulatory Flexibility Act

NHTSA has also considered the impacts of this final rule under the Regulatory Flexibility Act. I hereby certify that this rule will not have a significant economic impact on a substantial number of small entities. As explained above, there will not be a significant economic impact on purchasers of either dummies or vehicles as a result of this rule.

Paperwork Reduction Act

In accordance with the Paperwork Reduction Act of 1980 (P.L. 96–511), there are no requirements for information collection associated with this final rule.

National Environmental Policy Act

NHTSA has also analyzed this final rule under the National Environmental

Policy Act and determined that it will not have a significant impact on the human environment.

Executive Order 12612 (Federalism)

NHTSA has analyzed this rule in accordance with the principles and criteria contained in E.O. 12612, and has determined that this rule will not have significant federalism implications to warrant the preparation of a Federalism Assessment.

Civil Justice Reform

This final rule does not have any retroactive effect. Under 49 U.S.C. 30103, whenever a Federal motor vehicle safety standard is in effect, a State may not adopt or maintain a safety standard applicable to the same aspect of performance which is not identical to the Federal standard, except to the extent that the State requirement imposes a higher level of performance and applies only to vehicles procured for the State's use. 49 U.S.C. 30161 sets forth a procedure for judicial review of final rules establishing, amending or revoking Federal motor vehicle safety standards. That section does not require submission of a petition for reconsideration or other administrative proceedings before parties may file suit in court.

List of Subjects in 49 CFR Part 572

Incorporation by reference, Motor vehicle safety.

In consideration of the foregoing, 49 CFR Part 572 is amended as follows:

PART 572—[AMENDED]

1. The authority citation for Part 572 of Title 49 continues to read as follows:

Authority: 49 U.S.C. 322, 30111, 30115, 30117, and 30166; delegation of authority at 49 CFR 1.50.

Subpart E—Hybrid III Test Dummy

2. Section 572.30 is amended by revising paragraph (b) to read as follows:

§ 572.30 Incorporated materials.

(a) * * *

(b) The materials incorporated by reference are available for examination in the general reference section of docket 74–14, Docket Section, National Highway Traffic Safety Administration, Room 5109, 400 Seventh Street, SW, Washington, DC 20590. Copies may be obtained from Reprographic Technologies, 9000 Virginia Manor Road, Beltsville, MD 20705, Telephone (301) 210–5600, Facsimile (301) 419–5069, Attn. Mr. Jay Wall. Drawings and specifications are also on file in the reference library of the Office of the Federal Register, 800 N. Capitol Street, NW., suite 700, Washington, DC.

3. Section 572.31 is amended by revising paragraphs (a)(1), (a)(3), and (a)(4) to read as follows, by removing paragraph (b), by redesignating paragraphs (c) through (f) as paragraphs (b) through (e) and by revising redesignated paragraph (d) to read as follows:

§ 572.31 General description.

(a) * * *

(1) The Anthropomorphic Test Dummy Parts List, dated September 9, 1996, and containing 16 pages.

* * * * *

(3) A General Motors Drawing No. 78051–218, revision S, titled ''Hybrid III Anthropomorphic Test Dummy,'' dated May 20, 1978, the following component assemblies, and subordinate drawings:

Drawing No.	Revision
78051–61 head assembly—complete, dated May 20, 1978	(T)
78051–90 neck assembly—complete, dated May 20, 1978	(A)
78051–89 upper torso assembly—complete, dated May 20, 1978	(K)
78051–70 lower torso assembly—complete, dated August 20, 1996, except for drawing No. 78051–55, ''Instrumentation Assembly—Pelvic Accelerometer,'' dated August 2, 1979.	(E)
86–5001–001 leg assembly—complete (LH), dated March 26, 1996	(A)
86–5001–002 leg assembly—complete (RH), dated March 26, 1996	(A)
78051–123 arm assembly—complete (LH), dated May 20, 1996	(D)
78051–124 arm assembly—complete (RH), dated May 20, 1978	(D)

(4) Disassembly, Inspection, Assembly and Limbs Adjustment Procedures for the Hybrid III dummy, dated September 1996.

* * * * *

(d) The weights, inertial properties and centers of gravity location of component assemblies shall conform to those listed in drawing 78051–338, revision S, titled ''Segment Weights, Inertial Properties, Center of Gravity Location—Hybrid III,'' dated May 20, 1978 of drawing No. 78051–218.

* * * * *

4. Section 572.35 is amended by moving Figure 24 to the end of paragraph (c); revising paragraphs (a) through (c); and adding Figures 25 through 27 after Figure 24 at the end of the section, to read as follows:

§ 572.35 Limbs.

(a) The limbs consist of the following assemblies: leg assemblies 86–5001–001, revision A and –002, revision A, and arm assemblies 78051–123, revision D and –124, revision D, and shall conform to the drawings subtended therein.

(b) *Femur impact response.* (1) When each knee of the leg assemblies is impacted in accordance with paragraph (b)(2) of this section, at 6.9 ft/sec ±0.10 ft/sec by the pendulum defined in § 572.36(b), the peak knee impact force, which is a product of pendulum mass and acceleration, shall have a minimum value of not less than 1060 pounds and a maximum value of not more than 1300 pounds.

(2) *Test procedure.* (i) The test material consists of leg assemblies (86–5001–001, revision A) left and (–002, revision A) right with upper leg assemblies (78051–46) left and (78051–47) right removed. The load cell simulator (78051–319, revision A) is used to secure the knee cap assemblies (79051–16, revision B) as shown in Figure 24).

(ii) Soak the test material in a test environment at any temperature between 66 degrees F to 78 degrees F and at a relative humidity from 10% to 70% for a period of at least four hours prior to its application in a test.

(iii) Mount the test material with the leg assembly secured through the load cell simulator to a rigid surface as shown in Figure 24. No contact is permitted between the foot and any other exterior surfaces.

(iv) Place the longitudinal centerline of the test probe so that at contact with the knee it is collinear within 2 degrees with the longitudinal centerline of the femur load cell simulator.

(v) Guide the pendulum so that there is no significant lateral, vertical or rotational movement at time zero.

(vi) Impact the knee with the test probe so that the longitudinal centerline

of the test probe at the instant of impact falls within .5 degrees of a horizontal line parallel to the femur load cell simulator at time zero.

(vii) Time zero is defined as the time of contact between the test probe and the knee.

(c) *Hip joint-femur flexion.* (1) When each femur is rotated in the flexion direction in accordance with paragraph (c)(2) of this section, the femur rotation at 50 ft–lbf of torque will not be more than 36 deg. from its initial horizontal orientation, and at 150 ft–lbf of torque will not be less than 46 deg. or more than 52 deg.

(2) Test procedure. (i) The test material consists of the assembled dummy, part No. 78051–218 (revision S) except that (1) leg assemblies (86–5001–001 and 002) are separated from the dummy by removing the 3/8–16 Socket Head Cap Screw (SHCS) (78051–99) but retaining the structural assembly of the upper legs (78051–43 and –44), (2) the abdominal insert (78051–52) is removed and (3) the instrument cover plate (78051–13) in the pelvic bone is replaced by a rigid pelvic bone stabilizer insert (Figure 25a) and firmly secured.

(ii) Seat the dummy on a rigid seat fixture (Figure 25) and firmly secure it to the seat back by bolting the stabilizer insert and the rigid support device (Figure 25b) to the seat back of the test fixture (Figures 26 and 27) while maintaining the pelvis (78051–58) ''B'' plane horizontal.

(iii) Insert a lever arm into the femur shaft opening of the upper leg structure assembly (78051–43/44) and firmly secure it using the 3/8–16 socket head cap screws.

(iv) Lift the lever arm parallel to the midsagittal plane at a rotation rate of 5 to 10 deg. per second while maintaining the 1/2 in. shoulder bolt longitudinal centerline horizontal throughout the range of motion until the 150 ft–lbf torque level is reached. Record the torque and angle of rotation of the femur.

(v) Operating environment and temperature are the same as specified in paragraph (c)(3) of this section.

* * * * *

BILLING CODE 4910–59–P

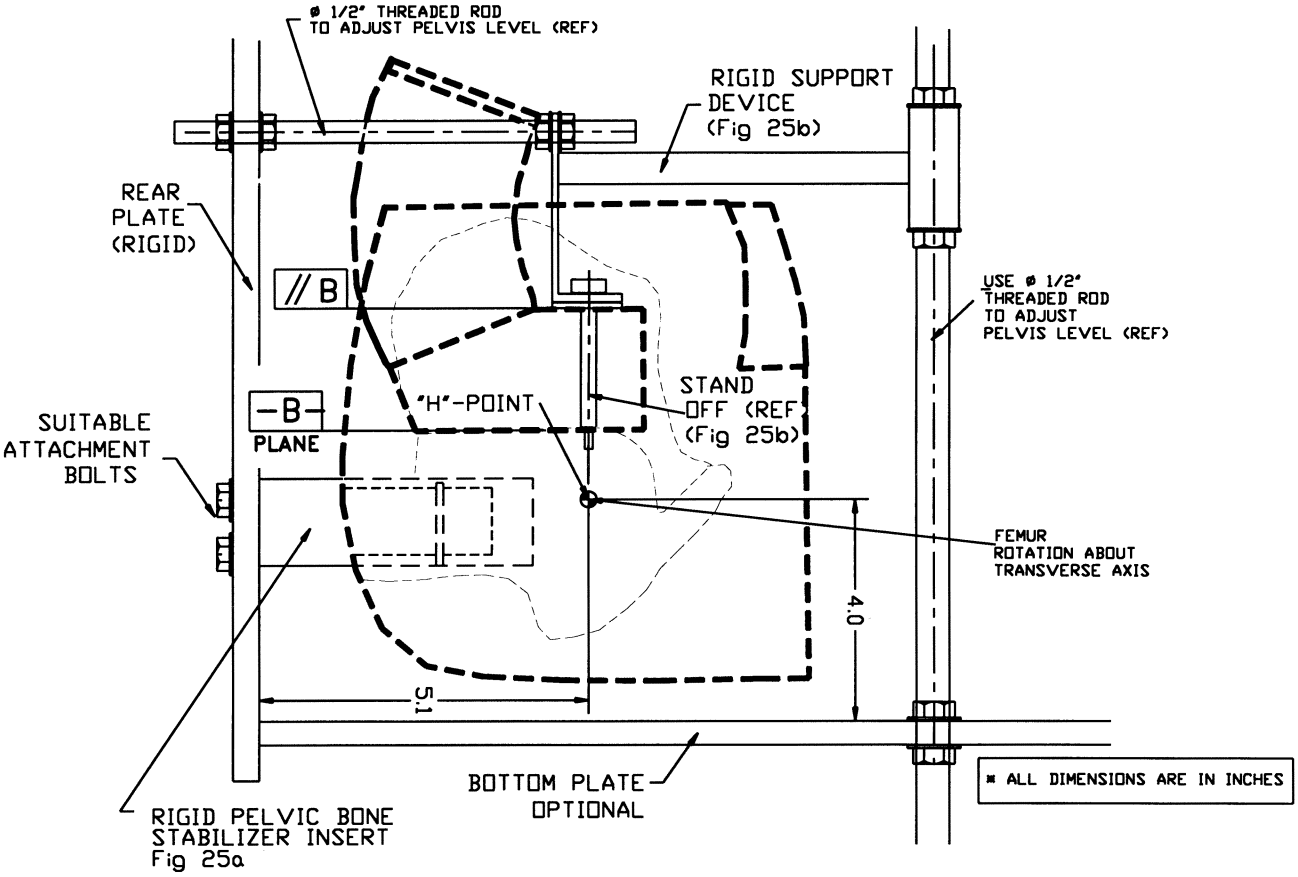

HIP-JOINT TEST FIXTURE ASSEMBLY (REF)

Fig 25

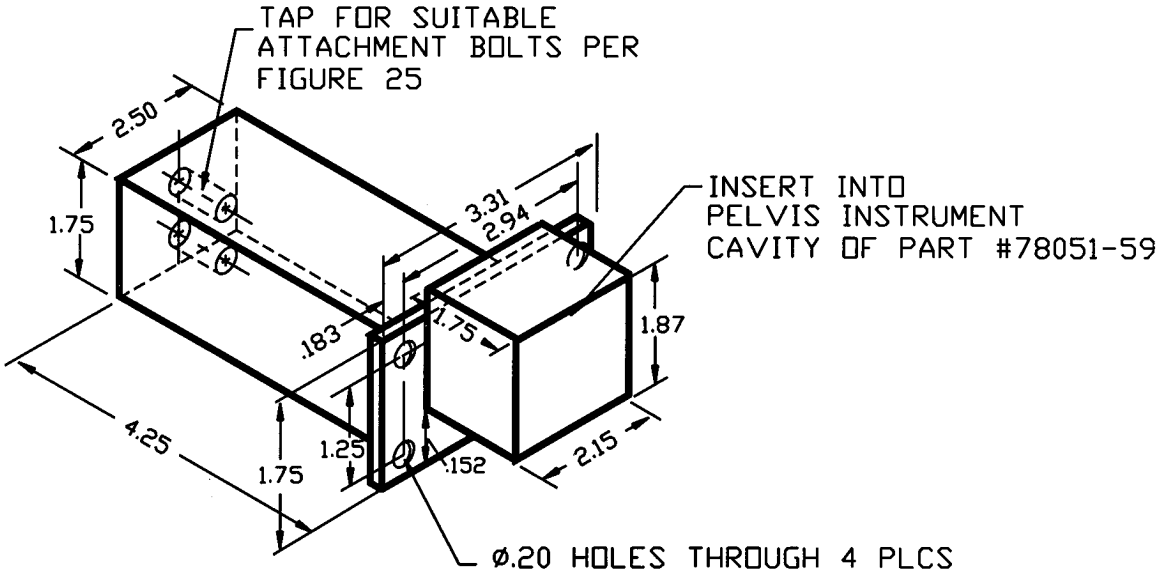

(REF NOTE): HOLE LOCATIONS MATCHING
INSTRUMENT CAVITY COVER #78051-13

* ALL DIMENSIONS ARE IN INCHES

MATERIAL: Alum. or Steel

PELVIC BONE STABILIZER INSERT (REF)

Fig 25a

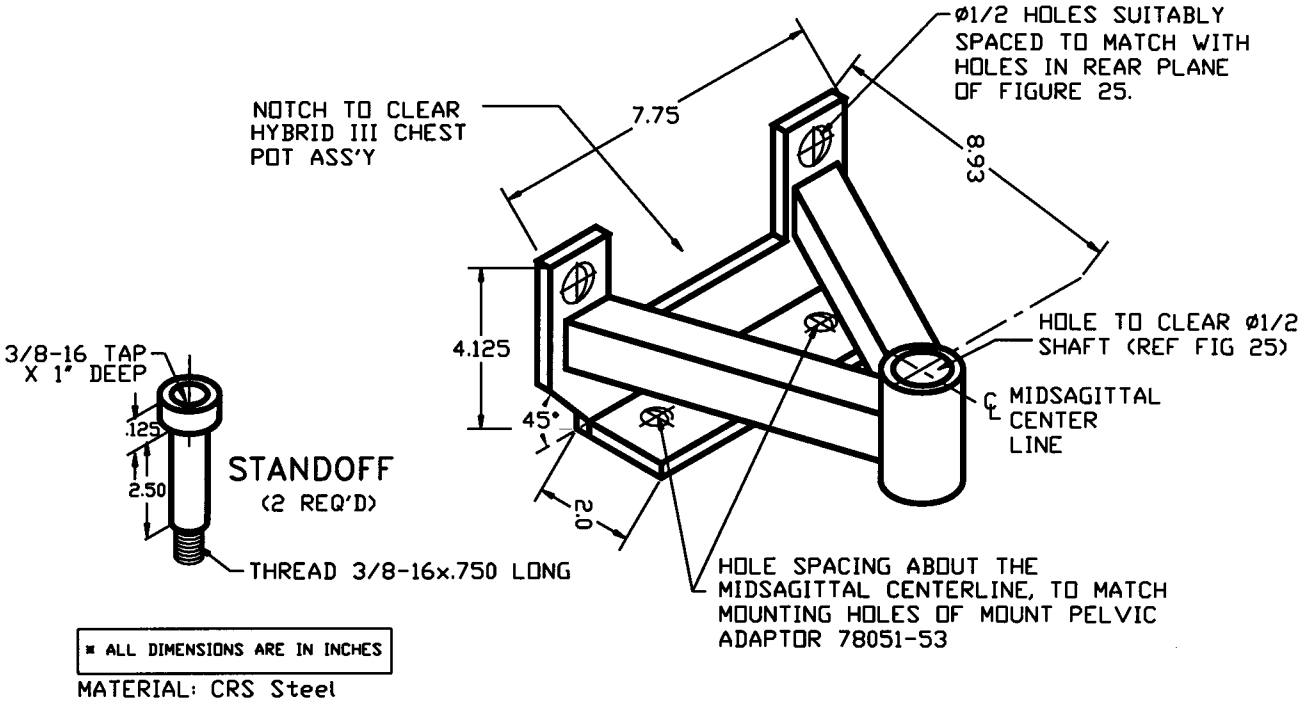

PELVIS UPPER SUPPORT DEVICE (REF)

Fig 25b

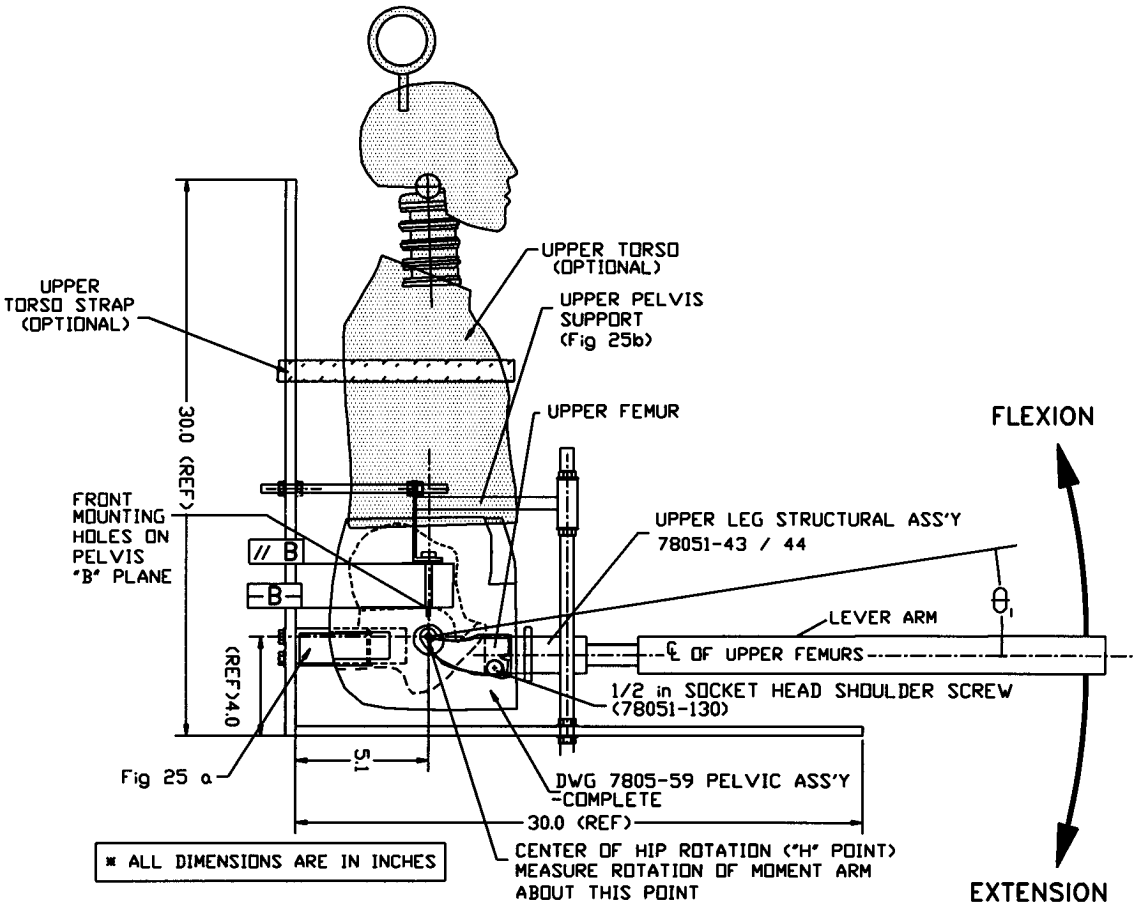

HIP JOINT TEST FIXTURE AND TORSO ASSEMBLY (REF)
SIDE VIEW

Fig 26

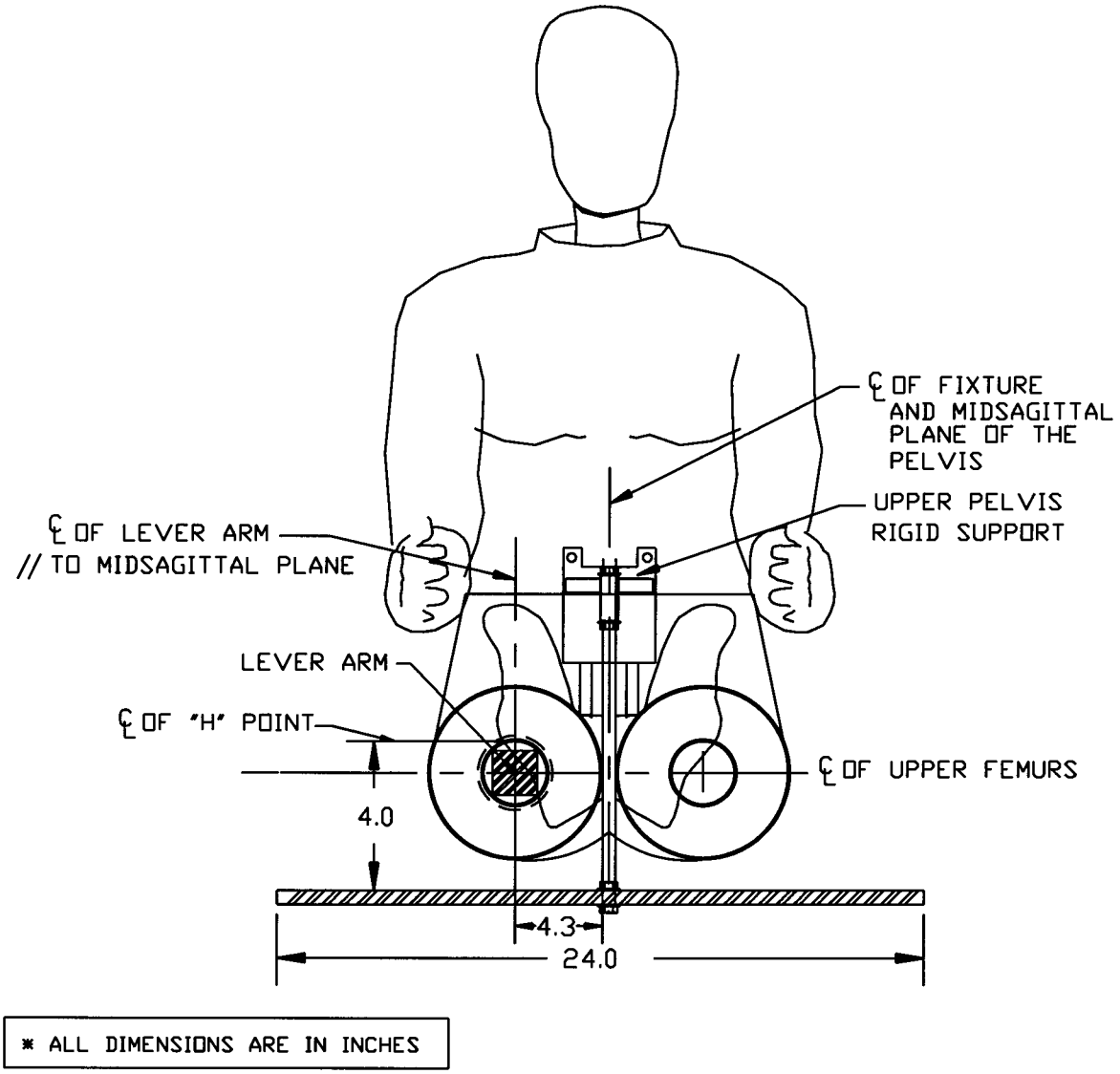

HIP JOINT TEST FIXTURE AND TORSO ASSEMBLY (REF)
FRONT VIEW

Fig 27

BILLING CODE 4910–59–C

Issued on December 18, 1996.

Ricardo Martinez,

Administrator.

[FR Doc. 96–32702 Filed 12–24–96; 8:45 am]

BILLING CODE 4910–59–P

Federal Transit Administration

49 CFR Parts 653 and 654

Prevention of Prohibited Drug Use in Transit Operations; Prevention of Alcohol Misuse in Transit Operations

AGENCY: Federal Transit Administration, DOT.

ACTION: Notice of random drug and alcohol testing rate.

SUMMARY: This notice announces the random testing rate for employers subject to the Federal Transit Administration's (FTA) drug and alcohol rules.

EFFECTIVE DATE: January 1, 1997.

FOR FURTHER INFORMATION: Contact Judy Meade, Director of the Office of Safety and Security (202) 366–2896 (telephone) and (202) 366–7951 (fax). Electronic access to this and other documents concerning FTA's drug and alcohol testing rules may be obtained through FTA's Transit Safety and Security Bulletin Board at 1–800–231–2061 or through the FTA World Wide Web home page at http://www.fta.bts.gov; both services are available seven days a week.

SUPPLEMENTARY INFORMATION: The Federal Transit Administration (FTA) required large transit employers to begin drug and alcohol testing ''safety-sensitive'' employees on January 1, 1995, and to report, annually by March 15 of each year beginning in 1996, the number of ''safety-sensitive'' employees who had a verified positive for the use of prohibited drugs, and the number of safety-sensitive employees who tested positive for the misuse of alcohol. Large employers are required to annually submit other data, not relevant here, in the same report; these data are available from the FTA as discussed below. Small employers started testing their ''safety-sensitive'' employees on January 1, 1996 and will begin to report the same information as the large employees beginning on March 15, 1997.

The rules established a random testing rate for prohibited drugs and the misuse of alcohol; specifically, the rules require that employers conduct random drug tests at a rate equivalent to at least 50 percent of its total number of safety-sensitive employees for prohibited drug use and at least 25 percent for the misuse of alcohol. The rules provide that the drug random testing rate will be lowered to 25 percent if the ''positive rate'' for the entire transit industry is less than one percent for two consecutive years. Once lowered, it may be raised to 50 percent if the positive rate equals or exceeds one percent for any one year. (''Positive rate'' means the number of positive results for random drug tests conducted under part 653 plus the number of refusals of random tests required by part 653, divided by the total number of random drug tests conducted under part 653 plus the number of refusals of random tests required by part 653.)

Likewise, the alcohol rule provides that the random rate will be lowered to 10 percent if the ''violation rate'' for the entire transit industry is less than .5 percent for two consecutive years. It will remain at 25 percent if the ''violation rate'' is equal to or greater than .5 percent but less than one percent, and it will be raised to 50 percent if the ''violation rate'' is one percent or greater for any one year. (''Violation rate'' means the number of covered employees found during random tests given under part 654 to have an alcohol concentration of .04 or greater, plus the number of employees who refuse a random test required by part 654, divided by the total reported number of employees in the industry given random alcohol tests under part 654 plus the total reported number of employees in the industry who refuse a random test required by part 654.)

FTA has received and analyzed the 1995 data from large transit employers. The ''positive rate'' for random drug tests was 1.7 percent and the ''violation rate'' for random alcohol tests was 0.24 percent; therefore, for 1997, transit employers will continue to be required to conduct random drug tests at a rate equivalent to at least 50 percent of the total number of its ''safety-sensitive'' employees for prohibited drugs and at least 25 percent for the misuse of alcohol.

FTA will be publishing in December a detailed report on the 1995 data collected from large employers. This report may be obtained from the Office of Safety and Security, Federal Transit Administration, 400 Seventh Street, SW, Room 9301, Washington, DC 20590, (202) 366–2896.

Issued: December 20, 1996.

Gordon J. Linton,

Administrator.

[FR Doc. 96–32821 Filed 12–24–96; 8:45 am]

BILLING CODE 4910–57–U

DEPARTMENT OF COMMERCE

National Oceanic and Atmospheric Administration

50 CFR Part 679

[Docket No. 960918264–6350–02; I.D. 091296A]

RIN 0648–AI61

Fisheries of the Exclusive Economic Zone Off Alaska; Individual Fishing Quota Program; Sweep-up Adjustments

AGENCY: National Marine Fisheries Service (NMFS), National Oceanic and Atmospheric Administration (NOAA), Commerce.

ACTION: Final rule.

SUMMARY: NMFS issues a final rule to implement Amendment 43 to the Fishery Management Plan (FMP) for the Groundfish Fishery of the Bering Sea and Aleutian Islands Area (BSAI), Amendment 43 to the Fishery Management Plan for Groundfish of the Gulf of Alaska (GOA), and a regulatory amendment to the halibut individual fishing quota (IFQ) regulations. This action is necessary to increase the consolidation (''sweep-up'') levels for small quota share (QS) blocks for Pacific halibut and sablefish managed under the IFQ program. This action is intended to maintain consistency with the objectives of the IFQ program (i.e., prevent excessive consolidation of QS, maintain diversity of the fishing fleet, and allow new entrants into the fishery), while increasing the program's flexibility by allowing a moderately greater amount of QS to be ''swept-up'' into larger amounts that can be fished more economically.

EFFECTIVE DATE: December 20, 1996.

ADDRESSES: Copies of the final rule and the environmental assessment/regulatory impact review (EA/RIR) for this action may be obtained from: Fisheries Management Division, Alaska Region, NMFS, 709 West 9th Street, Room 453, Juneau, AK 99801, or P.O. Box 21668, Juneau, AK 99802.

FOR FURTHER INFORMATION CONTACT: John Lepore, 907–586–7228.

SUPPLEMENTARY INFORMATION:

Background Information

The U.S. groundfish fisheries of the GOA and the BSAI in the exclusive economic zone are managed by NMFS pursuant to the FMPs for groundfish in the respective management areas. The FMPs were prepared by the North Pacific Fishery Management Council (Council) pursuant to the Magnuson-Stevens

Fishery Conservation and Management Act (Magnuson-Stevens Act) at 16 U.S.C. 1801 *et seq.* and are implemented by regulations for the U.S. fisheries at 50 CFR part 679. The Northern Pacific Halibut Act of 1982 (Halibut Act) at 16 U.S.C. 773 *et seq.* authorizes the Council to develop and NMFS to implement regulations to allocate halibut fishing privileges among U.S. fishermen.

Under these authorities, the Council developed the IFQ program, a limited access management system for the fixed gear Pacific halibut and sablefish fisheries. NMFS approved the IFQ program in November 1993 and fully implemented the program beginning in March 1995. The Magnuson-Stevens Act and the Halibut Act authorize the Council to recommend to NMFS changes to the IFQ program as necessary to conserve and manage the fixed gear Pacific halibut and sablefish fisheries.

Rationale for Amendments 43/43

Before NMFS implemented the IFQ program, the Council recommended that all QS that resulted at initial issuance in less than 20,000 lb (9 metric tons (mt)) of IFQ be ''blocked,'' that is, issued as an inseparable unit. Further information on Amendments 31/35 (Block Amendments) can be found in the preambles to the proposed rule (59 FR 33272, June 28, 1994), and the final rule (59 FR 51135, October 7, 1994). The final rule implementing these amendments was effective prior to the beginning of the first IFQ season in 1995.

The Block Amendments created a variety of block sizes that were available for transfer. One of the primary purposes of the Block Amendments was to create small blocks of QS that could be purchased at a relatively low cost by crew members and new entrants to the IFQ fisheries. As the experience of these fishermen increased and the size of their fishing operations grew, larger amounts of QS were needed to accommodate this growth. One method included in the Block Amendments to accommodate this growth was the ''sweep-up'' provision, which allows very small blocks of QS to be permanently consolidated. The maximum sweep-up level was set at 1,000 lb (0.45 mt) for Pacific halibut and 3,000 lb (1.4 mt) for sablefish, based on the 1994 total allowable catch (TAC).

After the completion of the first IFQ season, the IFQ longline industry reported that the established sweep-up levels were lower than the harvest amount of a worthwhile fishing trip. Therefore, the IFQ longline industry requested a moderate increase in the sweep-up levels to allow greater amounts of QS to be swept up into larger amounts that can be fished more economically. The Council determined that a moderate increase in the sweep-up levels would likely enhance the opportunity of crew members and small-boat fishermen who seek to increase their QS holdings. The Council also determined that allowing persons to consolidate permanently slightly larger blocks of QS would not circumvent the primary goals of the Block Amendments (i.e., preventing excessive consolidation and maintaining the diversity of the IFQ longline fleet). A proposed rule to implement these changes to the IFQ program was published on September 27, 1996, at 61 FR 50797.

Management Action Pursuant to Amendments 43/43

Amendments 43/43 increase the sweep-up levels for small QS blocks for Pacific halibut and sablefish from the current 1,000 lb (0.45 mt) maximum for Pacific halibut and 3,000 lb (1.4 mt) maximum for sablefish to a 3,000 lb (1.4 mt) maximum and a 5,000 lb (2.3 mt) maximum, respectively. Two other changes are also made to accompany these increases. First, the base year TAC for determining the pounds of IFQ used to determine the first sweep-up levels is now the 1996 TAC, rather than the 1994 TAC. Second, the maximum number of QS units that may be consolidated into a single block in each regulatory area is now fixed and codified. This will eliminate any confusion as to the appropriate sweep-up level in pounds.

Response to Comments

NMFS received a comment from the U.S. Coast Guard stating that its enforcement and safety concerns were addressed by this action. Also, NMFS received a request from the U.S. Department of the Interior (DOI), Office of Environmental Policy and Compliance, that the comment period for the proposed rule be extended until mid-December, 1996, in order to lengthen DOI's review opportunity. NMFS denies the request for an extended comment period. Any extension of the comment period would jeopardize compliance with the FMP review and approval schedule specified in section 304 of the Magnuson-Stevens Act. Furthermore, any extension to the comment period would delay the effective date of this rule, thereby decreasing the time period available for fishermen to consolidate blocked QS prior to the 1997 fishing season.

Classification

The Administrator, Alaska Region, NMFS, determined that Amendments 43 to the Fishery Management Plan for the Groundfish of the Gulf of Alaska and Amendment 43 to the Fishery Management Plan for the Groundfish Fishery of the Bering Sea and Aleutian Islands Area are necessary for the conservation and management of groundfish in waters off Alaska and halibut in waters in and off Alaska and that they are consistent with the Magnuson-Stevens Act and other applicable laws.

The Assistant Administrator for Fisheries, NOAA, finds that this final rule relieves a restriction, because this action is designed to allow fishermen to increase the efficiency of their operations through relaxed regulatory restrictions on sweep-up levels. Increasing the sweep-up levels as soon as possible will allow these fishermen to take advantage of the provision before the 1997 season. Therefore, a delayed effectiveness date is not required under 5 U.S.C. 553(d)(1).

An EA/RIR was prepared for this rule that describes the management background, the purpose and need for action, the management action alternatives, and the socio-economic impacts of the alternatives. The EA/RIR estimates the total number of small entities affected by this action, and analyzes the economic impact on those small entities. Based on the economic analysis in the EA/RIR, the Assistant General Counsel for Legislation and Regulation of the Department of Commerce certified to the Chief Counsel for Advocacy of the Small Business Administration that this rule would not have a significant economic impact on a substantial number of small entities. Copies of the EA/RIR can be obtained from NMFS (see **ADDRESSES**).

This final rule will not change the collection of information approved by the Office of Management and Budget, OMB Control Number 0648–0272, for the Pacific halibut and sablefish IFQ program.

This final rule has been determined to be not significant for purposes of E.O. 12866.

List of Subjects in 50 CFR Part 679

Fisheries, Reporting and recordkeeping requirements.

Dated: December 19, 1996.

Nancy Foster,

Deputy Assistant Administrator for Fisheries, National Marine Fisheries Service.

For the reasons set out in the preamble, 50 CFR part 679 is amended as follows:

PART 679—FISHERIES OF THE EXCLUSIVE ECONOMIC ZONE OFF ALASKA

1. The authority citation for 50 CFR part 679 continues to read as follows:

Authority: 16 U.S.C. 773 *et seq.*, 1801 *et seq.*

2. In § 679.41, paragraph (e)(2) is revised and paragraph (e)(3) is added to read as follows:

§ 679.41 Transfer of QS and IFQ.

* * * * *

(e)* * *

(2) QS blocks for the same IFQ regulatory area and vessel category that represent less than 5,000 lb (2.3 mt) of sablefish IFQ, based on the 1996 TAC share for fixed gear sablefish in a specific IFQ regulatory area and the QS pool for that IFQ regulatory area on January 31, 1996, may be consolidated into larger QS blocks provided that the consolidated blocks do not represent greater than 5,000 lbs (2.3 mt) of sablefish IFQ based on the preceding criteria. A consolidated block cannot be divided and is considered a single block for purposes of use and transferability. The maximum number of QS units that may be consolidated into a single QS block in each IFQ regulatory area is as follows:

(i) Southeast Outside district: 33,270 QS.

(ii) West Yakutat district: 43,390 QS.

(iii) Central Gulf area: 46,055 QS.

(iv) Western Gulf area: 48,410 QS.

(v) Aleutian Islands subarea: 99,210 QS.

(vi) Bering Sea subarea: 91,275 QS.

(3) QS blocks for the same IFQ regulatory area and vessel category that represent less than 3,000 lbs (1.4 mt) of halibut IFQ, based on the 1996 catch limit for halibut in a specific IFQ regulatory area and the QS pool for that IFQ regulatory area on January 31, 1996, may be consolidated into larger QS blocks provided that the consolidated blocks do not represent greater than 3,000 lbs (1.4 mt) of halibut IFQ based on the preceding criteria. A consolidated block cannot be divided and is considered a single block for purposes of use and transferability. The maximum number of QS units that may be consolidated into a single block in each IFQ regulatory area is as follows:

(i) Area 2C: 19,992 QS.

(ii) Area 3A: 27,912 QS.

(iii) Area 3B: 44,193 QS.

(iv) Subarea 4A: 22,947 QS.

(v) Subarea 4B: 15,087 QS.

(vi) Subarea 4C: 30,930 QS.

(vii) Subarea 4D: 26,082 QS.

(viii) Subarea 4E: 0 QS.

* * * * *

[FR Doc. 96–32752 Filed 12–20–96; 12:43 pm]

BILLING CODE 3510–22–F

Proposed Rules

Federal Register
Vol. 61, No. 249
Thursday, December 26, 1996

This section of the FEDERAL REGISTER contains notices to the public of the proposed issuance of rules and regulations. The purpose of these notices is to give interested persons an opportunity to participate in the rule making prior to the adoption of the final rules.

DEPARTMENT OF TRANSPORTATION

Federal Aviation Administration

14 CFR Part 39

[Docket No. 95–CE–31–AD]

RIN 2120 AA64

Airworthiness Directives; AeroSpace Technologies of Australia Limited (formerly Government Aircraft Industries), Nomad Models N22S, N22B, and N24A Airplanes

AGENCY: Federal Aviation Administration, DOT.

ACTION: Notice of proposed rulemaking (NPRM).

SUMMARY: This document proposes to supersede AD 82–25–09 which currently requires repetitively inspecting the pilot and co-pilot control wheel sub-assemblies for cracks, and if cracked, modifying the cracked part on the AeroSpace Technologies of Australia, Limited (ASTA), formerly Government Aircraft Industries (GAF) Nomad Models N22S, N22B, and N24A airplanes. The proposed action would retain the repetitive inspection of the pilot and co-pilot control wheel sub-assemblies for cracks, but would include a modification that would terminate the repetitive inspections by replacing or re-working the control wheel sub-assembly with a part of improved design. This proposed superseding action is prompted by cracking in the control wheel sub-assemblies and the manufacture of an improved part that would terminate the repetitive inspection. The actions specified by the proposed AD are intended to prevent failure of the pilot's and co-pilot's control wheels, which, if not detected and corrected, could result in loss of control of the airplane.

DATES: Comments must be received on or before February 21, 1997.

ADDRESSES: Submit comments in triplicate to the Federal Aviation Administration (FAA), Central Region, Office of the Assistant Chief Counsel, Attention: Rules Docket No. 95–CE–31–AD, Room 1558, 601 E. 12th Street, Kansas City, Missouri 64106. Comments may be inspected at this location between 8 a.m. and 4 p.m., Monday through Friday, holidays excepted.

Service information that applies to the proposed AD may be obtained from AeroSpace Technologies of Australia, Limited, ASTA DEFENCE, Private Bag No. 4, Beach Road Lara 3212, Victoria, Australia. This information also may be examined at the Rules Docket at the address above.

FOR FURTHER INFORMATION CONTACT: Mr. Ron Atmur, Aerospace Engineer, Los Angeles Aircraft Certification Office, FAA, 3960 Paramount Blvd., Lakewood, California, 90712; telephone (310) 627–5224; facsimile (310) 627–5210.

SUPPLEMENTARY INFORMATION:

Comments Invited

Interested persons are invited to participate in the making of the proposed rule by submitting such written data, views, or arguments as they may desire. Communications should identify the Rules Docket number and be submitted in triplicate to the address specified above. All communications received on or before the closing date for comments, specified above, will be considered before taking action on the proposed rule. The proposals contained in this notice may be changed in light of the comments received.

Comments are specifically invited on the overall regulatory, economic, environmental, and energy aspects of the proposed rule. All comments submitted will be available, both before and after the closing date for comments, in the Rules Docket for examination by interested persons. A report that summarizes each FAA-public contact concerned with the substance of this proposal will be filed in the Rules Docket.

Commenters wishing the FAA to acknowledge receipt of their comments submitted in response to this notice must submit a self-addressed, stamped postcard on which the following statement is made: ''Comments to Docket No. 95–CE–31–AD.'' The postcard will be date stamped and returned to the commenter.

Availability of NPRMs

Any person may obtain a copy of this NPRM by submitting a request to the FAA, Central Region, Office of the Assistant Chief Counsel, Attention: Rules Docket No. 95–CE–31–AD, Room 1558, 601 E. 12th Street, Kansas City, Missouri 64106.

Discussion

Airworthiness Directive 82–25–09, Amendment 39–4510 currently requires repetitively inspecting the pilot and co-pilot control wheel sub-assemblies for cracks, and if cracked, modifying the cracked part on the ASTA Nomad Models N22S, N22B, and N24A airplanes. Accomplishment of the proposed modification would terminate the repetitive inspections.

Actions Since Issuance of Previous Rule

The Civil Aviation Safety Authority (CASA) of Australia, which is the airworthiness authority for Australia, notified the FAA that an unsafe condition may exist on ASTA Nomad Models N22S, N22B, and N24A airplanes. The CASA of Australia advises that several incidents have been reported of the pilot's and co-pilot's control wheels developing structural cracks and becoming inoperable, reducing the pilots' ability to control the airplane during flight.

Since the publication of AD 82–25–09, the manufacturer has designed a part of improved design. The proposed action would retain the repetitive inspection of the pilot and co-pilot control wheel sub-assemblies for cracks, but would include a modification that would terminate the repetitive inspections by replacing or re-working the control wheel sub-assembly with a part of improved design.

Applicable Service Information

ASTA has issued Government Aircraft Factories (GAF) Nomad Alert Service Bulletin (SB) AS/B ANMD–27–27, Revision 1, dated November 5, 1982, which specifies repetitively inspecting the control wheel sub-assemblies for cracking, modifying the assemblies by replacing or reworking them when cracks appear, and upon the accumulation of 300 hours time-in-service, modifying the control wheel sub-assemblies by replacing or re-working them with a part of improved design. This modification would be

considered a terminating action for the repetitive inspections.

The CASA of Australia classified this service bulletin as mandatory and issued CASA of Australia AD/GAF–N22/46 AMDT 1 in order to assure the continued airworthiness of these airplanes in Australia.

FAA's Determination

This airplane model is manufactured in Australia and is type certificated for operation in the United States under the provisions of section 21.29 of the Federal Aviation Regulations (14 CFR 21.29) and the applicable bilateral airworthiness agreement. Pursuant to this bilateral airworthiness agreement, the Australian CASA has kept the FAA informed of the situation described above. The FAA has examined the findings of the Australian CASA, reviewed all available information, and determined that AD action is necessary for products of this type design that are certificated for operation in the United States.

Explanation of the Provision of the Proposed AD

Since an unsafe condition has been identified that is likely to exist or develop in other ASTA Nomad Models N22S, N22B, and N24A airplanes of the same type design registered for operation in the United States, the proposed AD would supersede AD 82–25–09 with a new AD that would retain the repetitive 100 hour time-in-service (TIS) inspections for cracks on the pilot's and co-pilot's control wheel sub-assembly (part number (P/N) 1/N–45–1208) in the area adjacent to the circumferential weld adjoining the shaft spigot to each control wheel back support plate, modifying any cracked assembly by replacing the assembly with a part of improved design (P/N 2/N–45–1208), or re-working the assembly with approved re-worked parts (P/N 1/N–03–734), and if there are no signs of cracking during these inspections, terminating the repetitive inspections upon the accumulation of 300 hours TIS by accomplishing the modification to control wheel sub-assemblies with parts of improved design. This modification would be considered a terminating action for the repetitive inspections required in AD 82–25–09.

Cost Impact

The FAA estimates that 15 airplanes in the U.S. registry would be affected by the proposed AD, that it would take approximately 6 workhours per airplane to accomplish the proposed action, and that the average labor rate is approximately $60 an hour. Parts cost approximately $1,592 per airplane. Based on these figures, the total cost impact of the proposed AD on U.S. operators is estimated to be $23,680 or $1,952 per airplane. This figure is based on the cost of the initial inspection and modification and does not account for the repetitive inspections that may occur prior to the proposed modification. The FAA has no way to determine the number of airplanes that may have already accomplished this action.

Regulatory Impact

The regulations proposed herein would not have substantial direct effects on the States, on the relationship between the national government and the States, or on the distribution of power and responsibilities among the various levels of government. Therefore, in accordance with Executive Order 12612, it is determined that this proposal would not have sufficient federalism implications to warrant the preparation of a Federalism Assessment.

For the reasons discussed above, I certify that this action (1) is not a ''significant regulatory action'' under Executive Order 12866; (2) is not a ''significant rule'' under DOT Regulatory Policies and Procedures (44 FR 11034, February 26, 1979); and (3) if promulgated, will not have a significant economic impact, positive or negative, on a substantial number of small entities under the criteria of the Regulatory Flexibility Act. A copy of the draft regulatory evaluation prepared for this action has been placed in the Rules Docket. A copy of it may be obtained by contacting the Rules Docket at the location provided under the caption **ADDRESSES**.

List of Subjects in 14 CFR Part 39

Air transportation, Aircraft, Aviation safety, Safety.

The Proposed Amendment

Accordingly, pursuant to the authority delegated to me by the Administrator, the Federal Aviation Administration proposes to amend part 39 of the Federal Aviation Regulations (14 CFR part 39) as follows:

PART 39—AIRWORTHINESS DIRECTIVES

1. The authority citation for part 39 continues to read as follows:

Authority: 49 U.S.C. 106(g), 40113, 44701.

§ 39.13 [Amended]

2. Section 39.13 is amended by removing Airworthiness Directive (AD) 82–25–09, Amendment 39–4510, and by adding a new AD to read as follows:

Aerospace Technologies of Australia, Limited (ASTA) (formerly Government Aircraft Industries (GAF)):

Docket No. 95–CE–31–AD; Supersedes AD 82–25–09, Amendment 39–4510.

Applicability: Nomad Models N22S, N22B, and N24A airplanes, all serial numbers, certificated in any category.

Note 1: This AD applies to each airplane identified in the preceding applicability provision, regardless of whether it has been modified, altered, or repaired in the area subject to the requirements of this AD. For airplanes that have been modified, altered, or repaired so that the performance of the requirements of this AD is affected, the owner/operator must request approval for an alternative method of compliance in accordance with paragraph (e) of this AD. The request should include an assessment of the effect of the modification, alteration, or repair on the unsafe condition addressed by this AD; and, if the unsafe condition has not been eliminated, the request should include specific proposed actions to address it.

Compliance: Required within the next 100 hours time-in-service (TIS) after the effective date of this AD, and thereafter as indicated in this AD, unless already accomplished.

To prevent failure of the pilot's and co-pilot's control wheels, which, if not detected and corrected, could result in loss of control of the airplane, accomplish the following:

(a) Inspect the pilot and co-pilot control wheel sub-assembly (part number (P/N) 1/N–45–1208) for structural cracking in the area adjacent to the circumferential weld adjoining the shaft spigot to each control wheel back support plate in accordance with the ''2. *Accomplishment Instructions*'' section, ''*Part A*—Inspection'' paragraphs in Government Aircraft Industries (GAF) Nomad Alert Service Bulletin (SB) AS/B ANMD–27–27, Revision 1, dated November 5, 1982.

(1) If no cracks are visible, repetitively inspect the control wheel sub-assemblies at intervals not to exceed 100 hours TIS in accordance with the ''2. *Accomplishment Instructions*'' section, ''*Part A*—Inspection'' paragraphs in GAF Nomad Alert Service Bulletin (SB) AS/B ANMD–27–27, Revision 1, dated November 5, 1982 until the accomplishment of paragraph (b) of this AD.

(2) If cracks are visible during any inspection required by this AD, prior to further flight, modify the control wheel sub-assemblies by replacing or re-working the cracked part with parts of improved design (P/N 2/N–45–1208 or 1/N–03–734 (reworked part)) in accordance with the ''2. *Accomplishment Instructions*'' section, ''*Part B*—Modification by Replacement or Rework'' paragraphs in GAF Nomad Alert SB AS/B ANMD–27–27, Revision 1, dated November 5, 1982.

(b) Upon the accumulation of 300 hours TIS after the effective date of this AD, modify the control wheel sub-assemblies (P/N 1/N–45–1208) by replacing the assemblies or re-working the assemblies with parts of improved design (P/N 2/N–45–1208 or P/N 1/N–03–734, respectively) in accordance

with the ''2. *Accomplishment Instructions*'' section, ''*Part B*—Modification by Replacement or Rework'' paragraphs in GAF Nomad Alert SB AS/B ANMD–27–27, Revision 1, dated November 5, 1982.

(c) Accomplishment of the modification in paragraph (b) of this AD is considered a terminating action for the repetitive inspections required in paragraph (a)(1) of this AD.

(d) Special flight permits may be issued in accordance with 14 CFR 21.197 and 21.199 to operate the airplane to a location where the requirements of this AD can be accomplished.

(e) An alternative method of compliance or adjustment of the initial or repetitive compliance times that provides an equivalent level of safety may be approved by the Manager, Los Angeles Aircraft Certification Office, FAA, 3960 Paramount Blvd., Lakewood, California, 90712. The request shall be forwarded through an appropriate FAA Maintenance Inspector, who may add comments and then send it to the Manager, Los Angeles Aircraft Certification Office. Alternative methods of compliance approved in accordance with AD 82–25–09 (superseded by this action) are considered approved as alternative methods of compliance with this AD.

Note 2: Information concerning the existence of approved alternative methods of compliance with this AD, if any, may be obtained from the Los Angeles Aircraft Certification Office.

(f) All persons affected by this directive may obtain copies of the document referred to herein upon request to AeroSpace Technologies of Australia, Limited, ASTA DEFENCE, Private Bag No. 4, Beach Road Lara 3212, Victoria, Australia, or may examine this document at the FAA, Central Region, Office of the Assistant Chief Counsel, Room 1558, 601 E. 12th Street, Kansas City, Missouri 64106.

(g) This amendment supersedes AD 82–25–09, Amendment 39–4510.

Issued in Kansas City, Missouri, on December 18, 1996.

Michael Gallagher,

Manager, Small Airplane Directorate, Aircraft Certification Service.

[FR Doc. 96–32850 Filed 12–24–96; 8:45 am]

BILLING CODE 4910–13–U

---

14 CFR Part 71

[Airspace Docket No. 96–AWP–30]

Proposed Revision of Class E Airspace; Victorville, CA

AGENCY: Federal Aviation Administration (FAA), DOT.

ACTION: Notice of proposed rulemaking; extension of comment period.

SUMMARY: This notice announces the extension of the comment period on a Notice of Proposed Rulemaking (NPRM), which proposes to revise the Class E airspace area at Victorville, CA. This action is being taken due to an administrative oversight, wherein the comment period did not allow adequate time for interested persons to have the opportunity to comment.

DATES: Comments must be received on or before January 30, 1997.

ADDRESSES: Send comments on the proposal in triplicate to: Federal Aviation Administration, Attn: Manager, Operations Branch, AWP–530, Docket No. 96–AWP–30, Air Traffic Division, P.O. Box 92007, Worldway Postal Center, Los Angeles, California, 90009.

SUPPLEMENTARY INFORMATION:

Background

Airspace Docket No. 96–AWP–30, published on November 20, 1996 (61 FR 59042) proposed to revise the Class E airspace area at Victorville, CA. This action will extend the comment period closing date on that airspace docket from November 30, 1996, to January 30, 1997 to allow for a 30-day comment period instead of the existing 10-day abbreviated comment period.

List of Subjects in 14 CFR Part 71

Airspace, Incorporation by reference, Navigation (air).

Extension of Comment Period

The comment period closing date Airspace Docket No. 96–AWP–30, is hereby extended to January 30, 1997.

Authority: 49 U.S.C. 106(g), 40103, 40113, 40120; E.O. 10854, 24 FR 9565, 3 CFR, 1959–1963 Comp., p. 389; 14 CFR 11.69.

Issued in Los Angeles, California, on December 10, 1996.

Leonard A. Mobley,

Acting Manager, Air Traffic Division, Western-Pacific Region.

[FR Doc. 96–32711 Filed 12–24–96; 8:45 am]

BILLING CODE 4910–13–M

DEPARTMENT OF THE INTERIOR

Office of Surface Mining Reclamation and Enforcement

30 CFR Part 915

[SPATS No. IA–009–FOR]

Iowa Regulatory Program

AGENCY: Office of Surface Mining Reclamation and Enforcement (OSM), Interior.

ACTION: Proposed rule; public comment period and opportunity for public hearing.

SUMMARY: OSM is announcing receipt of a proposed amendment to the Iowa regulatory program (hereinafter the ''Iowa program'') under the Surface Mining Control and Reclamation Act of 1977 (SMCRA). The proposed amendment consists of revisions to the Iowa rules pertaining to repair or compensation for material damage resulting from subsidence caused by underground coal mining operations and to replacement of water supplies adversely impacted by underground coal mining operations. The amendment is intended to revise the Iowa program to be consistent with the corresponding Federal regulations and SMCRA.

DATES: Written comments must be received by 4:00 p.m., c.s.t., January 27, 1997. If requested, a public hearing on the proposed amendment will be held on January 21, 1997. Requests to speak at the hearing must be received by 4:00 p.m., c.s.t., on January 10, 1997.

ADDRESSES: Written comments and requests to speak at the hearing should be mailed or hand delivered to Michael C. Wolfrom, Mid-Continent Regional Coordinating Center, at the address listed below.

Copies of the Iowa program, the propose amendment, a listing of any scheduled public hearings, and all written comments received in response to this document will be available for public review at the addresses listed below during normal business hours, Monday through Friday, excluding holidays. Each requester may receive one free copy of the proposed amendment by contacting OSM's Mid-Continent Regional Coordinating Center.

Michael C. Wolfrom, Mid-Continent Regional Coordinating Center, Office of Surface Mining Reclamation and Enforcement, Alton Federal Building, 501 Belle Street, Alton, Illinois, 62002, Telephone: (618) 463–6460.

Iowa Department of Agriculture and Land Stewardship, Division of Soil Conservation, Henry A. Wallace Building, Des Moines, Iowa, 50319, Telephone: (515) 281–6147.

FOR FURTHER INFORMATION CONTACT: Michael C. Wolfrom, Mid-Continent Regional Coordinating Center, Telephone: (618) 463–6460.

SUPPLEMENTARY INFORMATION:

I. Background on the Iowa Program

On January 21, 1981, the Secretary of the Interior conditionally approved the Iowa program, effective April 10, 1981. General background information on the Iowa program, including the Secretary's findings, the disposition of comments, and the conditions of approval of the Iowa program can be found in the January 21, 1981, Federal Register (46 FR 5885). Subsequent actions

concerning Iowa's program and program amendments can be found at 30 CFR 915.10, 915.15, and 915.16.

II. Description of the Proposed Amendment

By letter dated December 4, 1996 (Administrative Record No. IA–424), Iowa submitted a proposed amendment to its program pursuant to SMCRA. Iowa submitted the proposed amendment in response to a May 20, 1996, letter (Administrative Record No. IA–420) that OSM sent to Iowa in accordance with 30 CFR 732.17(c). The provisions of the Iowa Administrative Code (IAC) that Iowa proposes to amend are IAC 27–40.4(10), Definitions; IAC 27–40.38(2), PHC determination; IAC 27–40.38(3), Subsidence control plan; IAC 27–40.64(8), Hydrologic balance protection; IAC 27–40.64(6), Subsidence control; and IAC 27–40.64(7), Repair of damage. The substantive changes proposed by Iowa are discussed below.

I. IAC 27–40.4(10) Definitions

At IAC 27–40.4(10), Iowa proposes to add at its incorporation of 30 CFR 701.5 definitions for the terms ''Drinking, domestic or residential water supply''; ''Material damage''; ''Non-commercial building''; ''Occupied residential dwelling and structures related thereto''; and ''Replacement of water supply.''

2. IAC 27–40.38(2) PHC Determination

At IAC 27–40.38(2), Iowa proposes to add at its incorporation of 30 CFR Part 784 the new Federal provision at 30 CFR 784.14(e)(3)(iv), which was effective May 1, 1995.

The substantive provision at paragraph (e)(3)(iv) requires the PHC determination to include findings on whether underground mining activities conducted after October 24, 1992, may result in contamination, diminution, or interruption of a well or spring in existence at the time the permit application is submitted and used for domestic, drinking, or residential purposes within the permit or adjacent areas.

3. IAC 27–40.38(3) Subsidence Control Plan

At IAC 27–40.38(3), Iowa proposes to delete 30 CFR 784.20 as incorporated by reference as in effect on July 1, 1992, and replace it with the revised Federal provisions at 30 CFR 784.20 that were effective May 1, 1995.

The substantive provisions of 30 CFR 784.20(a) require that each permit application for an underground mine include a pre-subsidence survey to identify potentially impacted structures, renewable resource lands, and protected water supplies within the proposed permit and adjacent areas. In addition, the revised rules add specific content requirements for the pre-subsidence survey, including: a detailed map, at a scale of 1:12,000, or larger scale if required by the regulatory authority, identifying the location and type of all structures, renewable resource lands that subsidence may materially damage or diminish the reasonably foreseeable use, and protected water supplies that could be adversely impacted; a narrative addressing the potential impacts of subsidence on these features; and identification of the premining condition of all protected structures and water supplies.

The substantive provisions of 30 CFR 784.20(b) require that a permit application for an underground mine include a subsidence control plan if the survey required by 30 CFR 784.20(a) identifies any domestic, drinking, or residential water supply that could be contaminated, diminished, or interrupted by subsidence. The subsidence control plan must contain the information contained in paragraphs (b)(1) through (b)(6). Paragraph (b)(2) requires that the plan must include a map showing the areas where damage minimization measures will be taken. Paragraph (b)(7) of the revised Federal rules requires that the subsidence control plan include a description of the methods to be used to minimize subsidence damage to protected structures when the proposed mining method involves planned subsidence. The rule allows the owner of the structure to waive this protection. In cases where there is no threat to health or safety, the rule also authorizes the waiver of this requirement if the applicant can demonstrate that the costs of damage minimization exceed anticipated repair costs. Paragraph (b)(8) of the revised rules requires that the subsidence control plan include a description of the measures to be taken to replace any adversely impacted protected water supply.

Iowa proposed minor changes to the provisions to make them State specific, including adding some State regulation citation cross-references and parenthetical notes.

4. IAC 27–40.64(8) Hydrologic Balance Protection

At IAC 27–40.64(8), Iowa proposes to add at its incorporation of 30 CFR Part 817 the new provision at 30 CFR 817.41(j), which was effective May 1, 1995.

The substantive provision of paragraph (j) requires prompt replacement of any drinking, domestic, or residential water supply that is contaminated, diminished, or interrupted by underground mining activities conducted after October 24, 1992.

5. IAC 27–40.64(6) Subsidence Control

IAC 27–40.64(6), Iowa proposes to delete 30 CFR 817.121(a), as incorporated by reference as in effect on July 1, 1992, and to add the actual Federal provision at 30 CFR 817.121(a), which was revised effective May 1, 1995.

The substantive provisions of paragraph (a) provide that, to the extent technologically and economically feasible, permittees using mining methods that involve planned subsidence must conduct their operations in a manner that minimizes subsidence damage to protected structures. The rule allows the owner of the structure to provide a written waiver of this protection. In cases where there is no threat to health or safety, the rule also authorizes the regulatory authority to waive this requirement if the applicant can demonstrate that the costs of damage minimization exceed anticipated repair costs.

6. IAC 27–40.64(7) Repair of Damage

At IAC 27–40.64(7), Iowa proposes to delete 30 CFR 817.121(c) as incorporated by reference as in effect on July 1, 1992, and to add the actual Federal provisions at 30 CFR 817.121(c), which were revised effective May 1, 1995.

The substantive provisions of 30 CFR 817.121(c) (2) and (3) require the permittee to promptly repair, or compensate the owner for, subsidence-related material damage to any noncommercial building or occupied residential dwelling or related structure that existed at the time of mining, provided the subsidence results from underground mining activities conducted after October 24, 1992. The rule also provides that, to the extent required by State law, the permittee must repair or compensate the owner for subsidence-related material damage to all other structures and facilities. The substantive provisions at 30 CFR 817.121(c)(4) establish a rebuttable presumption that the permittee is responsible for any structural damage caused by earth movement within a specified angle of draw from the outermost boundary of any underground mine workings to the land surface. Unless otherwise approved in the permit or the State program based on a geotechnical analysis of the factors affecting potential surface impacts of underground coal mining operations,

the presumption must apply within a 30-degree angle of draw. No presumption exists if the owner of the structure denied the permittee access to conduct the presubsidence survey required under 30 CFR 784.20(a). All relevant and reasonably available information must be considered in determining whether damage was caused by subsidence from underground mining. The substantive provisions of 30 CFR 817.121(c)(5) provide that, if subsidence-related material damage occurs to land, structures, or facilities protected under 30 CFR 817.121(c), the regulatory authority must require the permittee to post additional performance bond in the amount of the estimated repair costs or diminution in value, depending on whether the permittee intends to repair the damage or compensate the owner. Similarly, if an underground mining operation contaminates, diminishes, or interrupts any water supply protected under 30 CFR 817.41(j), the regulatory authority must require the permittee to post additional bond in the amount of the estimated cost of replacing the supply. The permittee must post this bond within 90 days of the date the damage occurred, unless repair, compensation, or replacement is completed within that timeframe. Under certain circumstances, the regulatory authority may extend the 90-day grace period up to a maximum of one year.

Iowa proposed minor modifications to the provisions to make them State program specific, including adding some State regulation citation cross-references and parenthetical notations.

III. Public Comment Procedures

In accordance with the provisions of 30 CFR 732.17(h), OSM is seeking comments on whether the proposed amendment satisfies the applicable program approval criteria of 30 CFR 732.15. If the amendment is deemed adequate, it will become part of the Iowa program.

Written Comments

Written comments should be specific, pertain only to the issues proposed in this rulemaking, and include explanations in support of the commenter's recommendations. Comments received after the time indicated under **DATES** or at locations other than the Mid-Continent Regional Coordinating Center will not necessarily be considered in the final rulemaking or included in the Administrative Record.

Public Hearing

Persons wishing to speak at the public hearing should contact the person listed under **FOR FURTHER INFORMATION CONTACT** by 4:00 p.m., c.s.t. on January 10, 1997. If no one requests an opportunity to speak at the public hearing, the hearing will not be held.

The location and time of the hearing will be arranged with those persons requesting the hearing. Filing of a written statement at the time of the hearing is requested as it will greatly assist the transcriber. Submission of written statements in advance of the hearing will allow OSM officials to prepare adequate responses and appropriate questions. Any disabled individual who has need for a special accommodation to attend a public hearing should contact the individual listed under **FOR FURTHER INFORMATION CONTACT**

The public hearing will continue on the specific date until all persons scheduled to speak have been heard. Persons in the audience who have not been scheduled to speak, and who wish to do so, will be heard following those who have been scheduled. The hearing will end after all persons scheduled to speak and persons present in the audience who wish to speak have been heard.

Public Meeting

If only one person requests an opportunity to speak at a hearing, a public meeting, rather than a public hearing, may be held. Persons wishing to meet with OSM representatives to discuss the proposed amendment may request a meeting by contacting the person listed under **FOR FURTHER INFORMATION CONTACT.** All such meetings will be open to the public and, if possible, notices of meetings will be posted at the locations listed under **ADDRESSES.** A written summary of each meeting will be made a part of the Administrative Record.

IV. Procedural Determinations

Executive Order 12866

This rule is exempted from review by the Office of Management and Budget (OMB) under Executive Order 12866 (Regulatory Planning and Review).

Executive Order 12988

The Department of the Interior has conducted the reviews required by section 3 of Executive Order 12988 (Civil Justice Reform) and has determined that, to the extent allowed by law, this rule meets the applicable standards of subsections (a) and (b) of that section. However, these standards are not applicable to the actual language of State regulatory programs and program amendments since each such program is drafted and promulgated by a specific State, not by OSM. Under sections 503 and 505 of SMCRA (30 U.S.C. 1253 and 1255) and 30 CFR 730.11, 732.15, and 732.17(h)(10), decisions on proposed State regulatory programs and program amendments submitted by the States must be based solely on a determination of whether the submittal is consistent with SMCRA and its implementing Federal regulations and whether the other requirements of 30 CFR Parts 730, 731, and 732 have been met.

National Environmental Policy Act

No environmental impact statement is required for this rule since section 702(d) of SMCRA (30 U.S.C. 1292(d)) provides that agency decisions on proposed State regulatory program provisions do not constitute major Federal actions within the meaning of section 102(2)(C) of the National Environmental Policy Act (42 U.S.C. 4332(2)(C)).

Paperwork Reduction Act

This rule does not contain information collection requirements that require approval by OMB under the Paperwork Reduction Act (44 U.S.C. 3507 *et seq.*).

Regulatory Flexibility Act

The Department of the Interior has determined that this rule will not have a significant economic impact on a substantial number of small entities under the Regulatory Flexibility Act (5 U.S.C. 601 *et seq.*). The State submittal which is the subject of this rule is based upon counterpart Federal regulations for which an economic analysis was prepared and certification made that such regulations would not have a significant economic effect upon a substantial number of small entities. Accordingly, this rule will ensure that existing requirements previously promulgated by OSM will be implemented by the State. In making the determination as to whether this rule would have a significant economic impact, the Department relied upon the data and assumptions for the counterpart Federal regulations.

Unfunded Mandates

This rule will not impose a cost of $100 million or more in any given year on any governmental entity or the private sector.

List of Subjects in 30 CFR Part 915

Intergovernmental relations, Surface mining, Underground mining.

Dated: December 7, 1996.

Brent Wahlquist,

Regional Director, Mid-Continent Regional Coordinating Center.

[FR Doc. 96–32707 Filed 12–24–96; 8:45 am]

BILLING CODE 4310–05–M

DEPARTMENT OF TRANSPORTATION

Coast Guard

33 CFR Part 117

[CGD05–96–101]

RIN 2115–AE47

Drawbridge Operation Regulations; Corson Inlet, Strathmere, NJ

AGENCY: Coast Guard, DOT.

ACTION: Notice of proposed rulemaking.

SUMMARY: At the request of the Cape May County Bridge Commission, the Coast Guard is proposing to change the regulations that govern the operation of the drawbridge across Corson Inlet, mile 0.9, at Strathmere, New Jersey, by requiring a two hour advance notice for drawbridge openings from October 1 to May 15 from 10 p.m. to 6 a.m., seven days a week. This proposed rule is intended to help relieve the bridge owner of the burden of having a bridge tender constantly available at times when there are few or no requests for openings, while still providing for the reasonable needs of navigation.

DATES: Comments must be received on or before February 24, 1997.

ADDRESSES: Comments may be mailed to Commander (Aowb), USCG Atlantic Area, Federal Building, 4th Floor, 431 Crawford Street, Portsmouth, Virginia 23704–5004, or may be hand-delivered to the same address between 8 a.m. and 4:30 p.m., Monday through Friday, except Federal holidays. The telephone number is (757) 398–6222. Comments will become a part of this docket and will be available for inspection and copying at the above address.

FOR FURTHER INFORMATION CONTACT: Ann B. Deaton, Bridge Administrator, USCG Atlantic Area, at (757) 398–6222.

SUPPLEMENTARY INFORMATION:

Requests for Comments

The Coast Guard encourages interested persons to participate in this rulemaking by submitting written views, comments, data, or arguments. Persons submitting comments should include their names and addresses, identify this rulemaking (CGD05–96–101), the specific section of this rule to which each comment applies, and give reasons for each comment. The Coast Guard requests that all comments and attachments be submitted in an unbound format suitable for copying and electronic filing. If that is not practical, a second copy of any bound material is requested. Persons wanting acknowledgment of receipt of comments should enclose a stamped, self-addressed postcard or envelope.

The Coast Guard will consider all comments received during the comment period. It may change this proposal in view of the comments.

The Coast Guard plans no public hearing. Persons may request a public hearing by writing to the Commander, USCG Atlantic Area, at the address listed under **ADDRESSES**. The request should include reasons why a hearing would be beneficial. If it determines that the opportunity for oral presentations will aid this rulemaking, the Coast Guard will hold a public hearing at a time and place announced by a later notice in the Federal Register.

Background and Purpose

The drawbridge across Corson Inlet, mile 0.9, at Strathmere, New Jersey, is currently required to open on request year round. The Cape May County Bridge Commission (Commission) has requested that the operating schedule for the drawbridge be amended to reduce the periods during which it must open the bridge on signal. In support of its request, the Commission contends that its records show that during the period from October 1 through May 15, no vessels required a drawbridge opening during the hours of 10 p.m. to 6 a.m.

The Coast Guard has reviewed the Commission's bridge logs for 1992 through 1995, copies of which are included in the docket for this rulemaking. According to the logs, no openings occurred between the hours of 10 p.m. and 6 a.m. from October 1 through May 15 in any of these years.

Therefore, the Coast Guard is proposing a new regulation governing the operation of the drawbridge across Corson Inlet, mile 0.9, at Strathmere, New Jersey. The proposed rule would require the bridge to open on signal from May 15 through September 30 and between 6 a.m. and 10 p.m. from October 1 through May 15. The bridge would also open between 10 p.m. and 6 a.m. from October 1 through May 15 if notice is given to the Cape May County Bridge Department two hours in advance of the time that the opening is requested. A sign will be posted at the bridge giving the Cape May County Bridge Department's 24-hour telephone number. The Coast Guard believes that these proposed changes will relieve the burden of requiring a bridgetender to be on duty during periods of little or no vessel traffic while not unduly restricting navigation.

Regulatory Evaluation

This proposed rule is not a significant regulatory action under section 3(f) of Executive Order 12866 and does not require an assessment of potential costs and benefits under section 6(a)(3) of that order. It has been exempted from review by the Office of Management and Budget under that order. It is not significant under the regulatory policies and procedures of the Department of Transportation (DOT) (44 FR 11040; February 26, 1979). The Coast Guard expects the economic impact of this proposed rule to be so minimal that a full Regulatory Evaluation under paragraph 10e of the regulatory policies and procedures of DOT is unnecessary.

Small Entities

Under the Regulatory Flexibility Act (5 U.S.C. 601 *et seq.*), the Coast Guard must consider whether this proposed rule will have a significant economic impact on a substantial number of small entities. ''Small entities'' include independently owned and operated small businesses that are not dominant in their field and that otherwise qualify as ''small business concerns'' under section 3 of the Small Business Act (15 U.S.C. 632). Because it expects the impact of this proposed rule to be minimal, the Coast Guard certifies under 5 U.S.C. 605(b) that this proposal, if adopted, will not have a significant economic impact on a substantial number of small entities.

Collection of Information

This proposal contains no collection of information requirements under the Paperwork Reduction Act (44 U.S.C. 3501 *et seq.*).

Federalism

The Coast Guard has analyzed this proposal under the principles and criteria contained in Executive Order 12612, and has determined that this proposed rule does not have sufficient federalism implications to warrant the preparation of a Federalism Assessment.

Environment

The Coast Guard considered the environmental impact of this proposal and concluded that under section 2.B.2.e.(32)(e) of Commandant Instruction M16475.1B (as amended, 59 FR 38654, 29 July 1994), this proposed rule is categorically excluded from further environmental documentation.

A Categorical Exclusion Determination statement has been prepared and placed in the rulemaking docket.

List of Subjects in 33 CFR Part 117

Bridges.

Regulations

In consideration of the foregoing, the Coast Guard proposes to amend Part 117 of Title 33, Code of Federal Regulations to read as follows:

PART 117—DRAWBRIDGE OPERATION REGULATIONS

1. The authority citation for Part 117 continues to read as follows:

Authority: 33 U.S.C. 499; 49 CFR 1.46; 33 CFR 1.05–1(g); section 117.255 also issued under the authority of Pub. L. 102–587, 106 Stat. 5039.

2. A new section, 117.714, is added to read as follows:

§ 117.714 Corson Inlet.

The draw of the Corson Inlet bridge, mile 0.9, at Strathmere, shall open on signal; except that from October 1 through May 15, from 10 p.m. to 6 a.m., the draw need only open if at least two hours notice is given.

Dated: December 6, 1996.

Kent H. Williams,

Vice Admiral, U.S. Coast Guard, Commander, Atlantic Area.

[FR Doc. 96–32845 Filed 12–24–96; 8:45 am]

BILLING CODE 4910–14–M

---

33 CFR Part 165

[CGD0–96–017]

Rin AE2115–AE46

Prevention of Collisions Between Commercial and Recreational Vessels in the South Passage of the Lake Erie Western Basin

AGENCY: Coast Guard, DOT.

ACTION: Advance notice of proposed rulemaking.

SUMMARY: The Coast Guard is considering a number of options for improvement of navigational safety in an area known as the ''South Passage'' in the Western Basin of Lake Erie. This is a high traffic area used by both commercial and recreational vessels. Collisions between commercial and recreational vessels in this area, with loss of lives in one case, have given the Coast Guard cause for concern about the long-term safety of the South Passage. The Coast Guard therefore requests public comment on the appropriateness and practicality of various options, some of which include possible regulatory action, to better protect both commercial and recreational vessels from risk of collision in this area. The Coast Guard is providing an advance notice of proposed rulemaking because comments on a range of various options are desired.

DATES: Comments must be received on or before February 24, 1997.

ADDRESSES: Comments and supporting materials should be mailed or delivered to Lieutenant Commander Rhae Giacoma, Assistant Chief, Marine Safety Analysis and Policy Branch, Ninth Coast Guard District, Room 2069, 1240 E. Ninth Coast Guard District, Room 2069, 1240 E. Ninth Street, Cleveland, Ohio, 44199–2060. Please reference the name of the proposal and the docket number in the heading above. If you wish receipt of your mailed comments to be acknowledged, please include a stamped self-addressed envelope or postcard for that purpose. Comments and materials received will be available for public inspection at the above location from 9:00 a.m. to 3:00 p.m. Monday through Friday.

FOR FURTHER INFORMATION CONTACT: Lieutenant Commander Rhae Giacoma, Assistant Chief, Marine Safety Analysis and Policy Branch, Ninth Coast Guard District, Room 2069, 1240 E. Ninth Street, Cleveland, Ohio, 44199–2060, (216) 522–3994.

SUPPLEMENTARY INFORMATION:

Request for Comments.

The Coast Guard Strongly encourages all interested parties to participate in this consideration of possible rulemaking by submitting written comments which may consist of data, views, arguments, or other proposals for or against the various options being considered. The Coast Guard is presenting options for a regulated navigation area as one approach for resolving the apparent waterway user conflict in the South Passage area of Western Lake Erie. Proposals for non-regulatory alternatives which would serve the same purpose of enhancing vessel safety in the area are also desired. Although all comments will be considered, interested parties are requested to specifically identify which of the detailed options they are commenting on, the basis for their objection to proposals they dislike, and what alternative option (including the option of no action) they do support.

The Coast Guard does not currently plan to have a public hearing. The Coast Guard sponsored a number of informal workshops which were open to all interested parties and which provided an informative airing of views. At this point, the Coast Guard is more in need of specific, written, and concrete comments. However, further consideration will be given to holding a formal public hearing if one is requested. Such a request should indicate how a public hearing would contribute substantial information or views which cannot be received in written form. If it appears that a public hearing would substantially contribute to this rulemaking, the Coast Guard will announce such a hearing by a later notice in the Federal Register. The Coast Guard will consider all comments received before the closing date indicated above, and may amend or revoke this proposal in response to such comments.

Background and Purpose

I. The South Passage

The South Passage is an area of water on the United States side of the Western Basin of Lake Erie, roughly 9 by 4 statute miles, bounded by Kelleys Island and South Bass Island on the north, and by Catawba Island and Point Marblehead on the south. The South Passage is one of two traditional, natural passages through the islands and shallows separating the Western and Central Basins of Lake Erie, the other being the Pelee Passage to the north on the Canadian side of the Western basin. At one time, between 1952 and 1974, it appears that the South Passage was a regular route for large commercial carriers. Since that time, Pelee Passage to the north in Canadian waters has become the preferred route for large commercial vessels transiting through the Western End of Lake Erie. There is still a wide array of both commercial and recreational traffic using some parts of the South Passage, including some large commercial carriers transiting in and out of the Marblehead area on the east side, barges and tow boats in transit both through and across the passage, regular ferry boats transiting across the passage, commercial excursion vessels, transiting recreational crafts, and recreational fishing vessels. In additional to being a natural passage in and out of the basin and a natural area of transit between the mainland and the islands, the South Passage is also a desirable fishing ground where a relatively heavy concentration of small recreational fishing vessels anchor or drift.

II. Accidents in the South Passage

Three collisions between commercial barges in tow and small recreational craft have occurred in the South Passage

during the last five years, one of which resulted in two deaths. (1) On May 1, 1992, a tug with a barge in tow collided with a recreational bass boat in the east end of the South Passage, off the Marblehead and Lakeside area. The bass boat was anchored, the occupants engaged in fishing. There was minor injury to one of the occupants of the bass boat. The Coast Guard took administrative actions against the license of the master of the tug. (2) On October 1, 1994, a tug and barge collided with a recreational motorboat in the west end of the South Passage, slightly to the east of the channel marked by the Starve Island Reef Red #2 buoy and the Scott Point shoal Green #1 buoy. The motorboat was anchored or dragging anchor (until shortly before the collision, when the occupants apparently attempted to raise anchor), the occupants engaged in fishing. Two of the four occupants of the motorboat died by drowning after jumping from the boat just before collision, and the other two occupants suffered minor injuries. The State of Ohio convicted the master of the tug of a misdemeanor and the Coast Guard has filed charges against the licenses of both the master and the operator of the tug. (The licensing action is still in adjudication.) the Coast Guard also required the owners of the tug and barge to make structural changes improving the visibility from the bridge. (3) On June 13, 1995,a tug with a crane barge in tow collided with a recreational motorboat in the east end of the South Passage, approximately one mile northeast of Marblehead light. The one occupant of the motorboat was ''drift fishing.'' No one was injured in the collision. The State of Ohio convicted the operator of the motorboat of a minor misdemeanor and the Coast Guard took administrative action against the license of the operator of the tug. The Coast Guard also required the owners of the crane barge to insure that visibility was not obstructed by the crane.

Although this is not a large number of accidents over a five-year period, the similarity of the events and the inherent dangerousness of collisions between barges and small boats, tragically demonstrated by the two deaths which have occurred, prompted the Coast Guard to conduct a special study of the South Passage in order to determine if there is a systemic problem which should be addressed. The Coast Guard and the State of Ohio have used administrative and criminal procedures to hold individuals (both commercial and recreational vessel operators) accountable in these cases. Although fault may be appropriately assigned to individuals for their failure to keep a proper lookout and exercise due care to avoid collisions in accordance with the principles of good seamanship, this does not negate the possibility that there are systemic problems creating an unusual risk of collision. The purpose of this study is to address those systemic problems. All three collisions occurred between tug/barge combinations and boats engaged in fishing. In one case the recreational boat was anchored, in another it was clearly drifting, and in one case it is uncertain whether it was at anchor or adrift at the time. In two cases it does not appear that the recreational boats were in clearly defined channels. In one case, the 1994 case which resulted in the deaths, the collision occurred in a channel clearly marked by red and green lateral buoys (Reef Red #2 buoy and Scott Point Shoal Green #1 buoy), although it is a matter very much in controversy as to whether or not this constituted a ''narrow channel'' as that term is used in the Inland Navigational Rules Act of 1980 (33 U.S.C. §§ 2001 et seq., especially Rule 9, 33 U.S.C. § 2009). Whether or not that was a ''narrow channel'' at the time (which is not a matter to be determined in this forum), the detailed investigation of that case conducted by the Coast Guard did provide some indication of a systemic conflict between recreational and commercial traffic in the South Passage. As the tug and barge approached the west end of the passage, they navigated between two large concentrations of boats north and south of the west end. As they actually entered the navigational channel market by Starve Island Reef Red #2 Buoy on the north and Scott Point Shoal Green #1 Buoy on the South, they found themselves between two packs of 15 or so boats, one clustered around each of the buoys. The recreational vessel that they hit was on the northeast side of the pack around the southern buoy, apparently quite close to the middle of the navigational channel. Given the inherent limits on the maneuverability of barges in tow, it appears that this was a dangerous situation in the making.

III. Consultation With the Marine Community

The Coast Guard solicited information and opinion from a variety of groups in order to obtain a better appreciation of the South Passage and develop ideas for possible improvements in navigational safety. This was an effort to fulfill the spirit of the President's ''Regulatory Reinvention Initiative'' (Presidential Memorandum of March 4, 1995), in which President Clinton urged Federal agencies to work with the local people affected by regulatory actions in order to achieve a consensus on reasonable solutions whenever possible. Those invited to provide input on the South Passage included tow boat operators, commercial carriers, commercial passenger vessel operators, recreational boating and fishing associations, a professional mariner association and individual mariners, along with representatives of the Ohio Department of Natural Resources, the City of Toledo, and the U.S. Coast Guard Auxiliary. Five informal workgroup sessions were held. The discussions were informal, wide-ranging, sometimes adversarial, and less informative than hoped. Many of the issues discussed were highly controversial, and there was little consensus on any point except the importance of continuing and enhancing existing programs for education of recreational boaters. There was controversy about whether or not there is a particular problem with conflicts between recreational and commercial vessels in the South Passage, with very different, sometimes inconsistent statements being made during the course of the informal discussions. There clearly are a large number of small boats anchored or drifting in various areas around the passage during summer months. However, some participants argued that there is no real problem with ''congestion'' or conflicting use as such. Other participants in the discussions described some dangerous situations, including near-misses between recreational and commercial vessels. There were comments about the dangerousness of recreational boaters anchoring or drifting in commercial channels, and, conversely, about the dangerousness of barge operators who seem to expect boats to give way as a matter of course. Some participants also expressed concern about boats sometimes blocking the approaches to the ferries running across the passage.

Because the characterization of the passage as ''congested'' has been controversial (the President of the Great Lakes Sport Fishing Council has found this term particularly objectionable), several points about the use of that term should be clarified. First, it is a relative matter, having more to do with particular, localized concentrations of boats in navigational channels rather than a question of overall density in the passage. Clusters of ten to twenty boats gathered off points or gathered around a buoy, as is common even on weekdays during the summer in the passage, can constitute ''congestion'' even though

there may be no more than a few hundred boats out in the passage in total and there are large sections of the passage which are clear that day. Second, ''congestion'' is very relative to the point of view of the mariner in question. The same situation may appear completely uncongested to a recreational boater with freedom to maneuver in any of the large empty spaces of water remaining outside the clusters, and yet appear most definitely congested to the commercial operator forced to pass very close to one of those clusters because of limited scope for maneuver. Finally, the use of the term ''congestion'' by representatives of the Coast Guard in the workgroup discussions should not have been interpreted as expressing any idea that the South Passage has too much recreational traffic. To the contrary, the Coast Guard views the South Passage as an extremely valuable resource, important to recreation and tourism, which should be fully enjoyed by all. Any adjustments to navigational practices which may help protect the safety of recreational boaters using the passage should serve to encourage rather than discourage continued and expanded use of the passage for fishing and other recreation.

There was considerable dispute about the relative fault between recreational and commercial operators, and an intense controversy about whether the channel between the two buoys which was the site of the fatalities on October 1, 1994 was or was not a ''narrow channel'' subject to Rule 9 of the Inland Navigational Rules Act (which requires a small vessel to avoid impeding a vessel which cannot safely navigate outside the narrow channel). And there were widely differing opinions about the appropriateness of area-specific navigational regulations, some arguing that a few clear, geographic delineations would greatly enhance safety, others arguing that any regulations beyond the general navigational rules are unnecessary.

Although the workgroup discussions certainly assisted the Coast Guard in delineating issues, it is important for the Coast Guard to now be able to consider written and attributable comments on specific proposals. Also, it is important for the Coast Guard to make sure that any decision be based on comments from all concerned parties, solicited on an equal basis, whether or not they had an opportunity to personally participate in the workgroup sessions.

IV. Working Propositions

In framing the regulatory options presented here, the Coast Guard is proceeding on the basis of the following propositions, which are subject to dispute:

1. There is an obvious danger created when small boats are at anchor or adrift in an area used by a large commercial vessel, particularly if the occupants of the small boats are occupied in fishing and the commercial vessels are restricted in their visibility and maneuverability.

2. Recreational and commercial vessels have a right to make use of the South Passage, neither taking absolute priority over the other, but some regulatory adjustment may be necessary in order to insure than both can do so safety. Although Pelee Passage is now the primary route for large commercial traffic transiting Lake Erie, it is important not to lose the availability of the South Passage (the only passage in United States waters) for commercial traffic. At the same time, recreational use of the islands and fishing grounds in the South Passage area is likely to increase, and should not be impeded.

3. Any local rules promulgated for a particular area such as the South Passage should be consistent with the general statutory rules for navigation. Those general statutory rules obligate one vessel not to impede the passage of another. Section 15 of the Rivers and Harbors Act (33 U.S.C. 409) provides that ''It shall not be lawful to tie up or anchor vessels * * * in navigable channels in such a manner as to prevent or obstruct the passage of other vessels. * * *'' and Rule 9(b) of the Inland Navigational Rules (33 U.S.C. § 2009(b)) provides that ''A vessel of less than 20 meters in length or a sailing vessel shall not impede the passage of a vessel than can safely navigate only within a narrow channel or fairway.''

4. The general statutory provisions quoted above do not provide unambiguous guidance in some of these dangerous cases involving commercial and recreational vessels. It is a case by case determination (and certainly a matter of dispute, as evidenced by the discussions which took place in the workgroups) as to whether a particular vessel at anchor is obstructing another or whether any one of dozens of identifiable channels in the South Passage are ''narrow channels.'' It is difficult for an operator of a small recreational boat to know, in fact, whether or not the small vessel is obstructing a large commercial vessel which may or may not be restricted in its ability to maneuver. The recreational operators are usually not familiar with the drafts, stopping distances, and visibility limitations of large commercial vessels, particularly barges in tow. A small boat which is not an obstruction one day when there are few other vessels in a wide channel may well be an obstruction another day when the whole channel is more congested. In the absence of radio communications among the recreational vessels, and between the recreational and commercial vessels. it is difficult for the operators of the recreational vessels to know if they are in violation of these statutory provisions.

5. Other governmental actions of a more general and comprehensive nature may be of relevance in addressing this sort of problem on a nationwide basis. Those include (as suggested during the workgroup discussions), amendments to the Inland Navigational Rules Act of 1980, more extensive Coast Guard regulation of towing vessels (including visibility standards on all sizes of barge and tow combinations), new equipment requirements for recreational boats (such as radar reflectors, anchor balls, or radios), and licensing of recreational vessel operators. However, these proposals are outside the authority of the Commander of the Ninth Coast Guard District and cannot be expected to provide any improvement in the navigational safety in the South Passage in the foreseeable future. The Ninth District has already specified visibility requirements for some tug and barge combinations subject to Coast Guard inspection (including the one involved in the fatal collision on October 1, 1994). The Commander of the Ninth Coast Guard District is certainly prepared to submit a proposal for changes in the navigation rules to the Commandant of the Coast Guard if it appears that such a proposal would enhance safety and be appropriate on a nationwide basis. However, it is not apparent what change in the language of Rule 9 would as a practical matter better define a ''narrow channel'' in all the circumstances to which that would apply around the nation. At this point (although any written proposal will be read with interest), it seems more useful to address particular problem areas on a case by case basis, taking into account the particular configuration of the waterway and the traffic in the local area.

V. Options Under Consideration

The Coast Guard invites comments on any or all of the following options, and requests that commentors specifically identify the options they are arguing for or against (although comments making arguments in favor of options not listed here will also be considered):

Option 1. Do nothing. The existing accident rate would be deemed

unfortunate but tolerable, perhaps unavoidable. It may be noted that there have been no similar accidents during the 1993 or 1996 navigation seasons, although it should also be noted that neither the Coast Guard nor the State of Ohio has a system for recording and investigating near-misses which may occur on a more frequent basis. On the other hand, it may be argued that the congestion and dangerousness of the system is only likely to increase in the future.

Option 2. Emphasize enforcement and education. Make no changes in the South Passage navigational system, but put more resources into enforcement and educational efforts. The Coast Guard would continue with existing enforcement and education in cooperation with the Ohio Department of Natural Resources, the Coast Guard Auxiliary, the Power Squadron, boating groups, and maritime industry, as resources allow. Particular focus can be put on insuring high standards of professionalism among licensed commercial operators and educating recreational boaters about the dangers inherent in anchoring or drifting in commercial channels. However, Coast Guard resources available for more on the water enforcement or more educational outreach are limited, perhaps declining. Moreover, while operators can be told of the danger and reminded of their obligation to always maintain a good lookout, it is not clear how either enforcement or education can be effective in convincing small boats not to anchor or drift in front of channels needed by commercial vessels in the absence of some unambiguous legal rule prohibiting it.

Option 3. Make nonregulatory changes to the navigational system in the South Passage. The Coast Guard could request that the National Oceanic and Atmospheric Administration add some special delineations and notes to the nautical charts, marking the areas most commonly used by commercial vessels and warning small vessels that these areas may be dangerous for anchoring or drifting. (The areas delineated in the text of the regulatory alternatives proposed here may be taken as examples of lanes or danger areas which could also be delineated on a nonregulatory basis.) However, this may only create more confusion. Would such a marking create a ''narrow channel'' under Rule 9 or an ''obstruction'' under the Rivers and Harbors Act? Would a boater be guilty of ''negligent operation'' under Federal and State law for failing to heed the ''nonregulatory'' warning? Would it depend on whether or not a commercial vessel was operating in the warning area at the time? Special warning buoys could also be established by the Coast Guard. However, this would tend to create the same confusion about legal effect, and would be a drain on limited resources available to maintain aids to navigation in the Great Lakes.

Option 4. Establish regulated navigation areas in the South Passage. There is a wide variety of special rules which could be established to help avoid collisions. The regulatory options currently under consideration include the following permutations (and others will be considered if proposed by commentors). All mariners are invited to comment on the likely effectiveness of these proposals in protecting against the danger of collision. Operators of recreational boats, fishers, and others who have an economic interest in recreational or fishing activity in the area, are specifically requested to comment on any cost associated with these limited restrictions on anchoring and drifting.

Option 4–A. Designated no-anchor and no-drift lanes. These are narrow lanes for the routes most heavily used by commercial traffic, including (1) the channel between Starve Island Reef and Scott Point Shoal, (2) the approach to the commercial docks on the west side of Kelleys Island, (3) the approach to the commercial docks at Marblehead, and (4) the established ferry routes across the passage, between South Bass Island and Scott Point, and between the south side of Kelleys Island and Marblehead. Within these lanes, vessels of any size would be prohibited from either anchoring or drifting, but would be allowed to navigate in any manner otherwise allowed by the navigation rules as long as not anchored or adrift. A permutation on the theme might be to provide that a vessel would not be prohibited from anchoring or drifting in these lanes if the operator of the vessel is monitoring a marine radio on channel 16 so as to be available to be effectively hailed by an approaching commercial vessel.

This is the most restrictive regulatory option being considered. Under this option, the area marked off for no anchoring or drifting would be approximately 13% of the total area of the South Passage. Other forms of navigation would not be restricted. It may be noted that the proposed lanes are near to, but not at the specific points where the three collisions discussed above occurred. The purpose of the lanes is to provide the most logical routing possible, to and from points of commercial activity, which are as far as possible away from the shallower areas favored for fishing.

Draft Regulatory Text, Option 4–A:

§ 165.905 South Passage of Western Lake Erie—regulated navigation areas.

(a) *Locations.* The following navigational lanes in the South Passage of Western Lake Erie are regulated navigation areas:

(1) South Passage Transit Lane: an area 150 yards to either side of a line (approximately 8¾ statute miles long) running northwesterly (302° T) from a point at 41°33′30″ N, 82°42′43″ W on the east end of South Passage to a point at 41°37′30″ N, 82°51′16″ W on the west end of South Passage.

(2) Kellstone Lane: an area 150 yards to either side of a line (approximately 2⅞ statute miles long) running southwesterly (235° T, on a line of sight from the Kellstone Crib Light to the West Harbor Entrance Channel Light #1) from the Kellstone Crib Light at 41°36′36″ N, 82°43′40″ W to the point of intersection of the South Passage Transit Channel center line at 41°35′15″ N, 82°46′24″ W.

(3) Marblehead Stone Dock Lane: an area 150 yards to either side of a line (approximately 1¼ statute miles long) running northerly (019° T), from the Marblehead Stone Dock Light at 41°32′42″ N, 82°43′48″ W to the point of intersection of the South Passage Transit Channel center line at 41°33′45″ N, 82°43′19″ W.

(4) Catawba Island to South Bass Island Ferry Lane: an area 150 yards to either side of a line (approximately 2¾ statute miles long) running due north (000° T), from the ferry dock on the north side of Catawba Island (41°35′16″ N, 82°50′13″ W) to the ferry dock on the south side of South Bass Island (41°37′43″ N, 82°50′13″ W).

(5) Neuman Marblehead to Kelleys Island Ferry Lane: an area 150 yards to either side of a line (approximately 3½ statute miles long) running northerly (006° T), from the Neuman ferry dock at Marblehead (41°32′39″ N, 82°43′55″ W) to the Newman ferry dock on the south side of Kelleys Island (41°35′42″ N, 82°43′31″ W).

(6) Kellstone Marblehead to Kelleys Island Ferry Lane: an area 150 yards to either side of a line (approximately 3⅜ statute miles long) running northerly (019° T), from the Kellstone ferry dock at Marblehead (41°32′38″ N, 82°43′39″ W) to the Kellstone ferry dock on the south side of Kelleys Island (41°35′21″ N, 82°42′20″ W).

(b) *Regulations.* Vessels shall not anchor or drift in these regulated navigation areas.

Option 4–B. Designated no-anchor and no-drift choke points. This would be the same as Option 4–A, except that it would be limited to smaller areas in critical choke points on the ends of the commercial lanes instead of extending to the whole length of the lanes. These choke points could include (1) the approximately 600 by 1000 yard area immediately south of Starve Island Reef Red Buoy #2 bounded by the 25-foot depth contour, (2) a 300 by 1500 yard rectangle with a long axis of 224° true

running from the light on the end of the Kellstone dock on the east side of Kelleys Island to the middle of the channel between Carpenter point and the Red #2 Buoy off the point, and (3) 300 by 1000 yard areas off each of the ferry docks on South Bass Island, Catawba Island, Kelleys Island, and Marblehead.

Under this option, the area marked off for no anchoring or drifting would be approximately 3% of the total area of the South Passage. Other forms of navigation would not be restricted.

Draft Regulatory Text, Option 4–B:

§ 165.905 South Passage of Western Lake Erie—regulated navigation areas.

(a) *Locations.* The following areas in the South Passage of Western Lake Erie are regulated navigation areas:

(1) Scott Point Shoal and Starve Island Reef Channel: an area 300 yards to either side of a line (approximately 1 statute mile long) running northwesterly (302° T) from a point at 41°36′17″ N, 82°48′19″ W (approximately 300 yards northeast of Scott Point Shoal Green Buoy #1) to a point at 41°36′40″ N, 82°49′16″ W (approximately 300 yards southwest of Starve Island Reef Red Buoy #2).

(2) Kellstone Approach Channel: an area 150 yards to either side of a line (approximately 1¼ statute miles long) running southwesterly (235° T, on a line of sight from the Kellstone Crib Light to the West Harbor Entrance Channel Light #1) from the Kellstone Crib Light at 41°36′36″ N, 82°43′40″ W to a point at 41°36′02″ N, 82°44′50″ W.

(3) Marblehead Stone Dock Approach Channel: an area 150 yards to either side of a line running 019° T for 1000 yards from the Marblehead Stone Dock Light at 41°32′42″ N, 82°43′48″ W.

(4) South Passage Ferry Approach Channels: areas 150 yards to either side of lines 1000 yards long running:

(i) 000° T from the ferry docks on the north side of Catawba Island (41°35′16″ N, 82°50′13″ W);

(ii) 180° T from the ferry dock on the south side of South Bass Island (41°37′43″ N, 82°50′13″ W);

(iii) 0006° T from the Neuman ferry dock at Marblehead (41°32′39″ N, 82°43′55″ W):

(iv) 186° T from the Neuman ferry dock on the south side of Kelleys Island (41°35′42″ N, 82°43′31″ W);

(v) 019° T from the Kellstone ferry dock at Marblehead (41°32′38″ N, 82°43′39″ W); and

(vi) 099° T from the Kellstone ferry dock on the south side of Kelleys Island (41°35′21″ N, 82°42′20″ W).

(b) *Regulations.* Vessels shall not anchor or drift in these regulated navigation areas.

Option 4–C. Designated give-way areas. The same areas indicated above in either Option 4–A or Option 4–B, either lanes or choke points, could be designated as areas in which vessels less than 20 meters in length are obligated to clear the designated area upon the approach of barges, ferries, or other commercial vessels greater than 20 meters in length. In effect, this would be creating a ''narrow channel'' rule for each of these designated areas. Such a rule may or may not already apply in some of these areas depending on interpretation on the general rules. But this would make it clear and unambiguous, with notice to all parties beforehand. However, it is difficult to specify a practical decision rule for determining how close the approaching large vessel need be before the small vessel would be obligated to clear the channel.

Draft Regulatory Text, Option 4–C:

§ 165.905 South Passage of Western Lake Erie—regulated navigation areas.

(a) *Locations.* [Locations would be the same as those in either Option 4–A or Option 4–B above.]

(B) *Regulations.* In these regulated navigation areas, all vessels less than 20 meters in length shall clear the area upon the approach of barges, ferries, or other commercial vessels greater than 20 meters in length.

Drafting Information

The drafters of this regulation are Lieutenant Commander Rhae Giacoma, Assistant Chief, Marine Safety Analysis and Policy Branch, the project officer, and Commander Eric Reeves, Chief, Marine Safety Analysis and Policy Branch, Marine Safety Division, Ninth Coast Guard District.

The Environment, the Economy, and Federalism

The Coast Guard invites comments on significant effects that any of the actions or nonactions proposed in this notion would have on the environment, economics, or federalism:

(1) Would any of these proposed regulations or other options considered here have a significant environmental impact on the South Passage, Lake Erie, or nearby shore areas? If so, what resources would be impacted? How would the impacts be likely to occur?

(2) Would any of these proposed regulations or other options considered here have a significant economic impact on any small business or other small entity? If so, what are the likely costs? How would those costs be incurred?

(3) Would any of these proposed regulations or other options considered here intrude into areas traditionally not regulated by the Federal Government or otherwise implications for Federal and State relations?

Dated: December 2, 1996.

John A. Bastek,

Captain, U.S. Coast Guard, Acting Commander, Ninth Coast Guard District.

[FR Doc. 96–32836 Filed 12–24–96; 8:45 am]

BILLING CODE 4910–14–M

ENVIRONMENTAL PROTECTION AGENCY

40 CFR Part 300

[FRL–5668–9]

National Oil and Hazardous Substances Pollution Contingency Plan; National Priorities List

AGENCY: Environmental Protection Agency.

ACTION: Notice of intent to delete the Minot Landfill Site from the National Priorities List: request for comments.

SUMMARY: The Environmental Protection Agency (EPA), Region VIII announces its intent to delete the Minot Landfill Site (Site) from the National Priorities List (NPL) and requests public comment on this proposed action. The NPL constitutes Appendix B of 40 CFR Part 300 of the National Oil and Hazardous Substances Pollution Contingency Plan (NCP), which EPA promulgated pursuant to Section 105 of the Comprehensive Environmental Response, Compensation, and Liability Act (CERCLA) of 1980, as amended. EPA and the State of North Dakota (State) have determined that the Site as remediated poses no significant threat to public health or the environment and, therefore, further remedial measures pursuant to CERCLA are not appropriate.

DATES: Comments concerning this Site may be submitted on or before January 27, 1997.

ADDRESSES: Comments may be mailed to: Erna Acheson Waterman, Remedial Project Manager, U.S. Environmental Protection Agency, Region VIII, 999 18th Street, Suite 500, Mail Stop EPR–SR, Denver, Colorado 80202–2466.

Comprehensive information on this Site is available through the public docket which is available for viewing at the Minot Landfill site information repositories at the following locations:

Superfund Records Center, U.S. Environmental Protection Agency, Region VIII, 999 18th Street, 5th Floor, Denver, Colorado 80202–2466, (303) 312–6473. Hours of operation are 8:00 a.m. to 4:30 p.m.

Background information from the Regional public docket is also available for viewing at the Minot Landfill Site

information repository located at the City of Minot Offices, 1025 31st St., S.E. Minot, North Dakota 58701, (701) 857–4140. Contact: Alan Walter.

FOR FURTHER INFORMATION CONTACT: Erna Acheson Waterman, U.S. EPA, Region VIII, 999 18th Street, Suite 500, Mail Stop 8EPR–SR, Denver, Colorado 80202–2466, (303) 312–6762.

SUPPLEMENTARY INFORMATION:

Table of Contents

I. Introduction
II. NPL Deletion Criteria
III. Deletion Procedures
IV. Basis for Intended Site Deletion

I. Introduction

The Environmental Protection Agency (EPA), Region VIII announces its intent to delete the Minot Landfill Site (Site) located in Minot, North Dakota from the National Priorities List (NPL), Appendix B of the National Oil and Hazardous Substances Pollution Contingency Plan (NCP), 40 CFR Part 300, and requests comments on this deletion. EPA identifies sites that appear to present a significant risk to public health, welfare, or the environment and maintains the NPL as a list of these sites. As described in § 300.425(e)(3) of the NCP, sites deleted from the NPL remain eligible for remedial actions in the unlikely event that conditions at the site warrant such action.

The Site is identified as the Old Minot Landfill Site in many of the Site documents. EPA will accept comments on this proposed deletion for thirty days following publication of this notice in the Federal Register.

Section II of this notice explains the criteria for deleting sites from the NPL. Section III discusses procedures that EPA is using for this action. Section IV discusses the Minot Landfill Site and explains how the Site meets the deletion criteria.

II. NPL Deletion Criteria

Section 300.425(e) of the NCP provides that releases may be deleted from, or recategorized on the NPL where no further response is appropriate. In making a determination to delete a release from the NPL, EPA shall consider, in consultation with the state, whether any of the following criteria have been met:

(i) Responsible parties or other parties have implemented all appropriate response actions required;

(ii) All appropriate Fund-financed response under CERCLA has been implemented, and no further action by responsible parties is appropriate; or

(iii) The remedial investigation has shown that the release poses no significant threat to public health or the environment and, therefore, taking remedial measures is not appropriate.

For all Remedial Actions (RA) which result in hazardous substances, pollutants, or contaminants remaining at the site, CERCLA requires a review of such action be conducted no less than every five years after initiation of Remedial Action. Pursuant to CERCLA § 121(c), 40 C.F.R § 300.400(f)(4)(ii) and OSWER Directive 9355.7–02, Structure and Components of Five-year Review Guidance, July 26, 1994, EPA Region VIII must conduct a statutory five-year review at this Site prior to the end of the third quarter of 2001 (five years after Remedial Action on-site construction mobilization).

III. Deletion Procedures

EPA Region VIII will accept and evaluate public comments before making a final decision to delete the Minot Landfill Site. The following procedures were used for the intended deletion of this Site:

1. EPA Region VIII has recommended deletion of the Minot Site and has prepared the relevant documents;

2. The State of North Dakota has concurred with EPA's recommendation for deletion;

3. Concurrent with this Notice of Intent to Delete, a notice has been published in local newspapers and has been distributed to appropriate Federal, State and local officials, and other interested parties announcing the commencement of a 30-day public comment period on EPA's Notice of Intent to Delete;

4. The Region has made all relevant documents available in the Regional Office and local Site information repositories;

5. Prior to deletion of this Site, EPA's Regional Office will accept and evaluate public comments on EPA's Notice of Intent to Delete before making a final decision to delete. If necessary, the Agency will prepare a Responsiveness Summary to address any significant comments received. Public notices and copies of the Responsiveness Summary will be made available to local residents by the Regional office.

6. Deletion of the Site from the NPL does not in itself create, alter, or revoke any individual's rights or obligations. The NPL is designed primarily for informational purposes and to assist Agency management. As mentioned in Section II of this Notice, § 300.425(e)(3) of the NCP states that the deletion of a Site from the NPL does not preclude eligibility for future response actions should future Site conditions warrant such action.

7. A deletion occurs when the Regional Administrator places a final notice in the Federal Register. Generally, the NPL will reflect deletions in the final update following the Notice.

IV. Basis for Intended Site Deletion

The following summary provides EPA's rationale for recommending deletion of the Minot Landfill Superfund Site.

A. Site Background

The Minot Landfill Superfund Site is located in Section 27, Township 155 North, Range 83 West, approximately one mile southwest of downtown Minot, in Ward County, North Dakota. The Site is situated approximately 2,000 feet south of the Souris River and is located to the east of the intersection of the Burdick Expressway and the combined U.S. Highways 2 and 52 Bypass. The area that received municipal and industrial waste covered approximately 26 acres. Land use in the vicinity of the Site is light industrial and residential, with areas south-west of the Site used for agriculture.

The Site was placed on the National Priorities List (NPL) in 1989, Federal Register, Volume 54, No. 61, March 31, 1989, Page 13296.

In 1989, a Removal Action was initiated by the City of Minot. The Removal Action involved installation of a fence around the perimeter of the landfill, construction of surface runoff/erosion control (including swales and storm sewer piping), and seeding of areas disturbed by construction and exposed slopes on the hills located along the southern edge of the site. In 1990, additional work to repair drainage ditches and swales was performed to complete the Removal Action.

B. History

The Site was used to dispose of municipal and industrial waste between 1961 and 1971. The landfill was operated by the City of Minot. An estimated 75 tons/day of waste was placed in the landfill during its operation. The exact composition of the wastes disposed is not known. Discussions with past landfill operators indicate that refuse was received from the City of Minot, other neighboring towns, farms, industries, and military sites. In addition, the landfill likely contains arsenic-contaminated soils and residues, and solvents used in a variety of local industrial applications.

C. Characterization of Risk

Sampling and field studies were conducted by the City of Minot's consultant in order to prepare the Site-

wide Remedial Investigation (RI) Report. The RI Report, completed in 1992, characterized contamination for the entire Site.

Residential, commercial recreational, and agricultural areas are currently located in the vicinity of the Site, and nearly a quarter (8,000) of Minot's population lies within a one-mile radius of the Site. Since the latter part of 1989, most of the Site has been enclosed with a chain-link fence and, consequently, public access to the Site is presently restricted. Future land use for the areas adjacent to the Site is expected to be commercial and light industrial. A Baseline Risk Assessment (BRA) was prepared for the Site to evaluate potential human health risks associated with the Site in absence of any remedial action. Contaminated media that were quantitatively evaluated in the risk assessment were groundwater (including leachate), surface water, soil, sediment, and landfill gases. Potentially exposed receptors evaluated in the BRA were: (1) adult residents and occupational workers who live or work at or in the vicinity of the Site; and (2) active children between the ages of 3 to 12 years who live or play in the vicinity of the Site.

Once the contamination at the Site was characterized, an evaluation was made of the remedial measures that would be necessary to achieve specified cleanup goals. This evaluation and cleanup goals are contained in the Site Feasibility Study (FS), completed in 1992 by the City of Minot's consultant.

Additionally, a geophysical survey investigation, a borrow source investigation, and aerial surveying were performed in April and May 1993, by the City of Minot's consultant.

Upon completion of the Remedial Investigation/Feasibility Study (RI/FS) for the Site, EPA issued a Record of Decision (ROD) for the Site on June 21, 1993. Due to timing conflicts, this ROD did not include the results of the geophysical survey investigation. An Explanation of Significant Differences (ESD) was prepared to address the geophysical survey and additional information related to various components of the remedy presented at a remedial design kickoff meeting on January 23, 1996, between the City of Minot, EPA, North Dakota Department of Health (NDDH) and the City's consultant, Wenck Associates, Inc. (Wenck). The approved ESD for the Old Minot Landfill Superfund Site was issued April 10, 1996.

In April 1996, a Remedial Design Report describing the remedial actions to be implemented at the Minot Landfill Site was approved by the EPA and NDDH.

The Remedial Action at the Site took place during the months of July, August and September 1996. The elements of the Remedial Action are: Grading of the landfill and installation of a vegetated cover; installation of rip-rap around catch basins; installation of drains to collect leachate within the landfill for conveyance to the City of Minot waste water treatment facility; installation of riser pipes to serve as passive gas vents with removable wind turbines to help remove gas from the landfill; installation of seven groundwater monitoring wells and four piezometers to be used in longer term groundwater monitoring. Institutional Controls have been put into place to restrict or control land use within and adjacent to the Site boundaries.

Maintenance of fences, vegetated cover, groundwater monitoring and other longer term aspects of the response actions are addressed in the Monitoring Operations and Contingency Plan which was approved by EPA and the State of North Dakota on November 7, 1996. The Final Remedial Action Completion Report was approved by EPA and the State of North Dakota on November 29, 1996.

V. Community Relations

EPA produced a fact sheet on the site in October 1989. The City of Minot held a public meeting on the landfill in January 1990.

An EPA community involvement coordinator conducted interviews of Minot citizens during the week of September 25, 1990. EPA completed a Community Relations Plan for the Old Minot Landfill in November 1991. A mailing list of key contacts was developed.

EPA established an information repository at the Minot Public Library and placed a public notice announcing the repository's creation and location in the Minot Daily News.

A public notice was placed in the Minot Daily News announcing availability of the Remedial Investigation/Feasibility Study (RI/FS) Work Plan. An information update concerning human health risks at the Site was placed in the Minot Daily News on July 17, 1992.

EPA issued a Proposed Plan for Site cleanup in December 1992 and placed a public notice announcing the availability of the Proposed Plan, the initiation of the public comment period and the date of a Public Hearing on the Proposed Plan in the Minot Daily News. EPA held a public comment period on the Proposed Plan from Januaary 4, 1993 to March 4, 1993, and EPA conducted the public hearing on January 19, 1993 at the Minot City Hall.

The Record of Decision (ROD) was issued on June 21, 1993. A public notice announcing the issuance of the Record of Decision was placed in the Minot Daily News. The ROD contains a Responsiveness Summary that addresses the public comments that were received.

The Community Relations Plan was updated in November 1994.

A public notice announcing changes in the cleanup and the availability of an Explanation of Significant Differences was placed in the Minot Daily News on May 15 and 19, 1996.

Alan Walter, Public Works Director for the City of Minot appeared in the news media and provided information to the public both at the beginning and completion of the Remedial Action.

VI. Summary

The completed remedy results in hazardous substances remaining on-site above levels which allow for unlimited and unrestricted access; therefore institutional controls and operation and maintenance activities will be required.

For all Remedial Actions (RA) which result in hazardous substances, pollutants, or contaminants remaining at the Site CERCLA requires that a review of such action be conducted no less than every five years after initiation of the Remedial Action. Pursuant to CERCLA § 121(c), 40 C.F.R. § 300.400(f)(4)(ii) and OSWER Directive 9355.7–02, Structure and Components of Five-year Review Guidance, July 26, 1994, EPA Region VIII must conduct a statutory five-year review at this Site prior to the end of the third quarter of 2001 (five years after Remedial Action on-site Construction Mobilization). All completion requirements for the Minot Landfill Site have been achieved as outlined in OSWER Directive 9320.2–3A.

EPA, with the concurrence of the State of North Dakota, has determined that all appropriate response actions required by CERCLA at the Minot Landfill Site have been completed, and that no further cleanup by responsible parties is appropriate.

Dated: December 12, 1996.

Jack W. McGraw,

Acting Regional Administrator, U.S. Environmental Protection Agency, Region VIII.

[FR Doc. 96–32659 Filed 12–24–96; 8:45 am]

BILLING CODE 6560–50–P

FEDERAL COMMUNICATIONS COMMISSION

47 CFR Parts 0 and 1

[CC Docket No. 96–238; FCC 96–460]

Formal Complaints Filed Against Common Carriers

AGENCY: Federal Communications Commission.

ACTION: Proposed rule.

SUMMARY: The Commission adopted a Notice of Proposed Rulemaking (''NPRM'') seeking comment on proposed changes to the rules for processing formal complaints filed against common carriers. The NPRM proposes rules necessary to implement certain provisions contained in the 1996 Act that prescribe deadlines ranging from 90 days to 5 months for resolution of certain types of complaints against common carriers. The proposed rules require or encourage complainants and defendants to engage in certain pre-filing activities, change service requirements, modify the form of initial pleadings, shorten filing deadlines, eliminate certain pleading opportunities that do not appear useful or necessary, and eliminate or modify the discovery process.

DATES: Written comments by the public on the NPRM and the proposed and/or modified information collections are due January 6, 1996. Reply comments are due on January 31, 1996. Written comments by the Office of Management and Budget (OMB) on the proposed and/or modified information collections on or before February 24, 1997.

ADDRESSES: Comments and reply comments should be sent to the Office of the Secretary, Federal Communications Commission, 1919 M Street, N.W., Suite 222, Washington, D.C. 20554, with a copy to Anita Cheng, Federal Communications Commission, Enforcement Division, 2025 M Street, N.W., Room 6008, Washington, D.C. 20554. Parties should also file one copy of any documents filed in this docket with the Commission's copy contractor, International Transcription Services, Inc., 2100 M Street, N.W., Suite 140, Washington, D.C. 20037. In addition to filing comments with the Secretary, a copy of any comments on the information collections contained herein should be submitted to Dorothy Conway, Federal Communications Commission, Room 234, 1919 M Street, N.W., Washington, DC 20554, or via the Internet to dconway@fcc.gov and to Timothy Fain, OMB Desk Officer, 10236 NEOB, 725—17th Street, N.W., Washington, DC 20503 or via the Internet to fain__t@al.eop.gov.

FOR FURTHER INFORMATION CONTACT: Anita Cheng, Enforcement Division, Common Carrier Bureau, (202) 418–0960. For additional information concerning the information collections contained in the NPRM contact Dorothy Conway at (202) 418–0217, or via the Internet at dconway@fcc.gov.

SUPPLEMENTARY INFORMATION: This is a summary of the Commission's NPRM in CC Docket No. 96–238, adopted on November 26, 1996 and released November 27, 1996. The full text of the NPRM is available for inspection and copying during normal business hours in the FCC Reference Center, Room 239, 1919 M Street, N.W., Washington, D.C. The complete text of this decision may also be purchased from the Commission's duplicating contractor, International Transcription Services, 2100 M Street, N.W., Suite 140, Washington, D.C. 20037 (202) 857–3800.

Paperwork Reduction Act

The NPRM contains a proposed or modified information collection. The Commission, as part of its continuing effort to reduce paperwork burdens, invites the general public and the Office of Management and Budget (OMB) to comment on the information collections contained in the NPRM, as required by the Paperwork Reduction Act of 1995, Public Law No. 104–13. Public and agency comments are due at the same time as other comments on the NPRM; OMB notification of action is due February 24, 1997. Comments should address: (a) whether the proposed or modified information collection is necessary for the proper performance of the functions of the Commission, including whether the information shall have practical utility; (b) the accuracy of the Commission's burden estimates; (c) ways to enhance the quality, utility, and clarity of the information collected; and (d) ways to minimize the burden of the collection of information on the respondents, including the use of automated collection techniques or other forms of information technology.

OMB Control Number: 3060–0411.

Title: Formal Complaints Against Common Carriers, Sections 1.720 - 1.735.

Type of Review: Revised collection.

Respondents: Individuals or households; business or other for-profit, including small business; not-for-profit institutions; state, local or tribal government.

Section/Title	Number of respondents	Est. time per response (hour(s))	Total annual burden (hours)
a. Designation of Agent for Service	4,965	.5	2,482.5
b. Joint Statement of Stipulated Facts and Pleading Content Requirements	760	3	2,280
c. Orders Memorializing Rulings at Status Conferences	760	1	760
d. Complaint Intake Form	760	.5	380
Total Annual Burden:			5,902.5

Estimated cost per respondent: 0.

Needs and Uses: The information has been and is currently being used by the FCC to determine the sufficiency of complaints and to resolve the merits of disputes between the parties.

The NPRM proposes to require all carriers subject to the Communications Act of 1934, as amended, to file in writing and electronically, a designation of agent for service of process with the Commission, to facilitate service of process in all Commission proceedings.

Regarding changes to the pleading requirements, the NPRM proposes that complaints must contain complete statements of relevant facts and supporting documentation; certification that each complainant has discussed the possibility of settlement with each defendant prior to filing of the complaint; copies or descriptions of documents relevant to the complaint; name, address and telephone number of all individuals with information relevant to the complaint; a computation for any damages claimed. The NPRM also proposes that answers must be filed within 20 days of service of the formal complaint and must contain complete statements of relevant facts and supporting documentation; copies or descriptions of documents

relevant to the pleadings; name, address and telephone number of all individuals with information relevant to the pleadings; and proposes to prohibit general denials. The NPRM proposes to require all pleadings to be accompanied by copies of relevant tariffs. The NPRM proposes to prohibit replies unless authorized by the Commission and when permitted, replies must contain copies or descriptions of documents relevant to the pleadings; name, address and telephone number of all individuals with information relevant to the pleadings. The NPRM proposes to require all motions seeking Commission orders must be accompanied by proposed orders in both hard copy and on computer disk. The NPRM proposes to prohibit amendments to complaints to add new claims or requests for relief. The NPRM further requires parties to submit a joint statement of proposed stipulated facts and key legal issues within 5 days after the answer is filed, as well as requiring all relevant facts and documentation to be contained in each pleading. These proposals will promote agreement on a significant number of disputed facts and legal issues, as well as serving to better inform the Commission of the factual and legal areas in dispute.

The NPRM also proposes to require parties to memorialize jointly, in writing, Commission rulings made in a status conference and to submit such writing, within 24 hours, to the Commission staff person who made such rulings. This proposal would remove the burden of memorializing oral rulings made in status conferences from the Commission to the parties.

Finally, the NPRM proposes to require a complainant to submit a completed intake form with its formal complaint to indicate that the complaint meets the threshold requirements for stating a cause of action. This requirement would help to prevent the filing of procedurally insufficient complaints.

Initial Regulatory Flexibility Analysis

Pursuant to Section 603(a) of the Regulatory Flexibility Act, 5 U.S.C. Section 603(a) (1981), the Commission concluded that the proposals in the NPRM may have some economic impact on small business entities, due to the proposals to require or encourage complainants and defendants to engage in certain pre-filing activities, change service requirements, modify the form of initial pleadings, shorten filing deadlines, eliminate certain pleading opportunities that do not appear useful or necessary, and eliminate or modify the discovery process. Public comment is requested on the Initial Regulatory Flexibility Analysis set forth fully in the NPRM. These comments must be filed in accordance with the same filing deadlines set for comments on the other issues in this NPRM but they must have a separate and distinct heading designating them as responses to the Initial Regulatory Flexibility Analysis.

Need for and Objectives of the Proposed Rules: The Commission is issuing this Complaint NPRM to implement certain complaint provisions contained in the Telecommunications Act of 1996 and to improve generally the speed and effectiveness of its formal complaint process.

Legal Basis: The Complaint NPRM is adopted pursuant to Sections 1, 4(i), 4(j), 207 - 209, 260, 271, 274, and 275 of the Communications Act of 1934, as amended, 47 U.S.C. §§ 151, 154(i), 154(j), 207 - 209, 260, 271, 274, 275.

Description and Number of Small Entities Which May be Affected: The proposals in this proceeding may have a significant impact on a substantial number of small businesses as defined by Section 601(3) of the Regulatory Flexibility Act. Under the Small Business Act, a ''small business concern'' is one that: (1) is independently owned and operated; (2) is not dominant in its field of operation; and (3) meets any additional criteria established by the Small Business Administration (SBA). SBA has defined a small business for Standard Industrial Classification (SIC) categories 4812 (Radiotelephone Communications) and 4813 (Telephone Communications, Except Radiotelephone) as those which have fewer than 1,500 employees.

1. Telephone Companies (SIC 481)

Estimate of Potential Complainants that may be Classified as Small Businesses. Section 208(a) provides that formal complaints against a common carrier may be filed by ''[a]ny person, any body politic or municipal organization.'' The FCC has no control as to the filing frequency of complaints, nor as to the parties that will file complaints. The filing of complaints depends entirely upon the complainant's perception that it possesses a cause of action against a common carrier subject to the Communications Act of 1934, as amended, and it is the complainant's decision to file its complaint with the FCC. Therefore the Commission is unable at this time to estimate the number of future complainants that would qualify as small business concerns under SBA's definition.

Estimate of Potential Defendants that may be Classified as Small Businesses. The United States Bureau of the Census (''the Census Bureau'') reports that, at the end of 1992, there were 3,497 firms engaged in providing telephone services, as defined therein, for at least one year. This number encompasses a broad category which contains a variety of different subsets of carriers, including local exchange carriers, interexchange carriers, competitive access providers, cellular carriers, mobile service carriers, operator service providers, pay telephone operators, PCS providers, covered SMR providers, and resellers. It seems certain that some of those 3,497 telephone service firms may not qualify as small entities or small incumbent LECs because they are not ''independently owned and operated.'' For example, a PCS provider that is affiliated with an interexchange carrier having more than 1,500 employees would not meet the definition of a small business. It seems reasonable to conclude, therefore, that fewer than 3,497 telephone service firms are small entity telephone service firms or small incumbent LECs that may be affected by this Order. The Commission seeks comment on this conclusion. The Commission estimates below the potential defendants affected by this order by service category. The Commission seeks comment on these estimates.

Wireline Carriers and Service Providers. SBA has developed a definition of small entities for telephone communications companies other than radiotelephone (wireless) companies. The Census Bureau reports that, there were 2,321 such telephone companies in operation for at least one year at the end of 1992. All but 26 of the 2,321 non-radiotelephone companies listed by the Census Bureau were reported to have fewer than 1,000 employees. Thus, even if all 26 of those companies had more than 1,500 employees, there would still be 2,295 non-radiotelephone companies that might qualify as small entities or small incumbent LECs. Although it seems certain that some of these carriers are not independently owned and operated, the Commission is unable at this time to estimate with greater precision the number of wireline carriers and service providers that would qualify as small business concerns under SBA's definition. Consequently, the Commission estimates that there are fewer than 2,295 small entity telephone communications companies other than radiotelephone companies that may be affected by the decisions and rules adopted in this Order.

Local Exchange Carriers. Neither the Commission nor SBA has developed a definition of small providers of local

exchange services (LECs). The closest applicable definition under SBA rules is for telephone communications companies other than radiotelephone (wireless) companies. The most reliable source of information regarding the number of LECs nationwide of which the Commission is aware appears to be the data that it collects annually in connection with the Telecommunications Relay Service (TRS). According to the Commission's most recent data, 1,347 companies reported that they were engaged in the provision of local exchange services. Although it seems certain that some of these carriers are not independently owned and operated, or have more than 1,500 employees, the Commission is unable at this time to estimate with greater precision the number of LECs that would qualify as small business concerns under SBA's definition. Consequently, the Commission estimate that there are fewer than 1,347 small incumbent LECs that may be affected by the decisions and rules adopted in this Order.

Interexchange Carriers. Neither the Commission nor SBA has developed a definition of small entities specifically applicable to providers of interexchange services (IXCs). The closest applicable definition under SBA rules is for telephone communications companies other than radiotelephone (wireless) companies. The most reliable source of information regarding the number of IXCs nationwide of which the Commission is aware appears to be the data collected annually in connection with TRS. According to the Commission's most recent data, 97 companies reported that they were engaged in the provision of interexchange services. Although it seems certain that some of these carriers are not independently owned and operated, or have more than 1,500 employees, the Commission is unable at this time to estimate with greater precision the number of IXCs that would qualify as small business concerns under SBA's definition. Consequently, the Commission estimates that there are fewer than 97 small entity IXCs that may be affected by the decisions and rules adopted in this Order.

Competitive Access Providers. Neither the Commission nor SBA has developed a definition of small entities specifically applicable to providers of competitive access services (CAPs). The closest applicable definition under SBA rules is for telephone communications companies other than radiotelephone (wireless) companies. The most reliable source of information regarding the number of CAPs nationwide of which the Commission is aware appears to be the data that it collects annually in connection with the TRS. According to the Commission's most recent data, 30 companies reported that they were engaged in the provision of competitive access services. Although it seems certain that some of these carriers are not independently owned and operated, or have more than 1,500 employees, the Commission is unable at this time to estimate with greater precision the number of CAPs that would qualify as small business concerns under SBA's definition. Consequently, the Commission estimates that there are fewer than 30 small entity CAPs that may be affected by the decisions and rules adopted in this Order.

Operator Service Providers. Neither the Commission nor SBA has developed a definition of small entities specifically applicable to providers of operator services. The closest applicable definition under SBA rules is for telephone communications companies other than radiotelephone (wireless) companies. The most reliable source of information regarding the number of operator service providers nationwide of which the Commission is aware appears to be the data that it collects annually in connection with the TRS. According to the Commission's most recent data, 29 companies reported that they were engaged in the provision of operator services. Although it seems certain that some of these companies are not independently owned and operated, or have more than 1,500 employees, the Commission is unable at this time to estimate with greater precision the number of operator service providers that would qualify as small business concerns under SBA's definition. Consequently, the Commission estimates that there are fewer than 29 small entity operator service providers that may be affected by the decisions and rules adopted in this Order.

Pay Telephone Operators. Neither the Commission nor SBA has developed a definition of small entities specifically applicable to pay telephone operators. The closest applicable definition under SBA rules is for telephone communications companies other than radiotelephone (wireless) companies. The most reliable source of information regarding the number of pay telephone operators nationwide of which the Commission is aware appears to be the data that it collects annually in connection with the TRS. According to the Commission's most recent data, 197 companies reported that they were engaged in the provision of pay telephone services. Although it seems certain that some of these carriers are not independently owned and operated, or have more than 1,500 employees, the Commission is unable at this time to estimate with greater precision the number of pay telephone operators that would qualify as small business concerns under SBA's definition. Consequently, the Commission estimates that there are fewer than 197 small entity pay telephone operators that may be affected by the decisions and rules adopted in this Order.

Wireless (Radiotelephone) Carriers. SBA has developed a definition of small entities for radiotelephone (wireless) companies. The Census Bureau reports that there were 1,176 such companies in operation for at least one year at the end of 1992. According to SBA's definition, a small business radiotelephone company is one employing fewer than 1,500 persons. The Census Bureau also reported that 1,164 of those radiotelephone companies had fewer than 1,000 employees. Thus, even if all of the remaining 12 companies had more than 1,500 employees, there would still be 1,164 radiotelephone companies that might qualify as small entities if they are independently owned and operated. Although it seems certain that some of these carriers are not independently owned and operated, the Commission is unable at this time to estimate with greater precision the number of radiotelephone carriers and service providers that would qualify as small business concerns under SBA's definition. Consequently, the Commission estimates that there are fewer than 1,164 small entity radiotelephone companies that may be affected by the decisions and rules adopted in this Order.

Cellular Service Carriers. Neither the Commission nor SBA has developed a definition of small entities specifically applicable to providers of cellular services. The closest applicable definition under SBA rules is for telephone communications companies other than radiotelephone (wireless) companies. The most reliable source of information regarding the number of cellular service carriers nationwide of which the Commission is aware appears to be the data that it collects annually in connection with the TRS. According to the Commission's most recent data, 789 companies reported that they were engaged in the provision of cellular services. Although it seems certain that some of these carriers are not independently owned and operated, or have more than 1,500 employees, the Commission is unable at this time to estimate with greater precision the number of cellular service carriers that

would qualify as small business concerns under SBA's definition. Consequently, the Commission estimates that there are fewer than 789 small entity cellular service carriers that may be affected by the decisions and rules adopted in this Order.

Mobile Service Carriers. Neither the Commission nor SBA has developed a definition of small entities specifically applicable to mobile service carriers, such as paging companies. The closest applicable definition under SBA rules is for telephone communications companies other than radiotelephone (wireless) companies. The most reliable source of information regarding the number of mobile service carriers nationwide of which the Commission is aware appears to be the data that it collects annually in connection with the TRS. According to the Commission's most recent data, 117 companies reported that they were engaged in the provision of mobile services. Although it seems certain that some of these carriers are not independently owned and operated, or have more than 1,500 employees, the Commission is unable at this time to estimate with greater precision the number of mobile service carriers that would qualify under SBA's definition. Consequently, the Commission estimates that there are fewer than 117 small entity mobile service carriers that may be affected by the decisions and rules adopted in this Order.

Broadband PCS Licensees. The broadband PCS spectrum is divided into six frequency blocks designated A through F. As set forth in 47 CFR § 24.720(b), the Commission has defined ''small entity'' in the auctions for Blocks C and F as a firm that had average gross revenues of less than $40 million in the three previous calendar years. The Commission's definition of a ''small entity'' in the context of broadband PCS auctions has been approved by SBA. The Commission has auctioned broadband PCS licenses in Blocks A, B, and C. The Commission does not have sufficient data to determine how many small businesses bid successfully for licenses in Blocks A and B. There were 90 winning bidders that qualified as small entities in the Block C auction. Based on this information, the Commission concludes that the number of broadband PCS licensees affected by the decisions in this Order includes, at a minimum, the 90 winning bidders that qualified as small entities in the Block C broadband PCS auction.

At present, no licenses have been awarded for Blocks D, E, and F of broadband PCS spectrum. Therefore, there are no small businesses currently providing these services. However, a total of 1,479 licenses will be awarded in the D, E, and F Block broadband PCS auctions, which are scheduled to begin on August 26, 1996. Of the 153 qualified bidders for the D, E, and F Block PCS auctions, 105 were small businesses. Eligibility for the 493 F Block licenses is limited to entrepreneurs with average gross revenues of less than $125 million. There are 114 eligible bidders for the F Block. The Commission cannot estimate, however, the number of these licenses that will be won by small entities under this definition, nor how many small entities will win D or E Block licenses. Given that nearly all radiotelephone companies have fewer than 1,000 employees and that no reliable estimate of the number of prospective D, E, and F Block licensees can be made, the Commission assumes for purposes of this IRFA, that all of the licenses in the D, E, and F Block Broadband PCS auctions may be awarded to small entities under the Commission's rules, which may be affected by the decisions and rules adopted in this Order.

SMR Licensees. Pursuant to 47 CFR § 90.814(b)(1), the Commission has defined ''small entity'' in auctions for geographic area 800 MHz and 900 MHz SMR licenses as a firm that had average annual gross revenues of less than $15 million in the three previous calendar years. This definition of a ''small entity'' in the context of 800 MHz and 900 MHz SMR has been approved by the SBA. The rules adopted in this Order may apply to SMR providers in the 800 MHz and 900 MHz bands that either hold geographic area licenses or have obtained extended implementation authorizations. The Commission does not know how many firms provide 800 MHz or 900 MHz geographic area SMR service pursuant to extended implementation authorizations, nor how many of these providers have annual revenues of less than $15 million. The Commission assumes, for purposes of this IRFA, that all of the extended implementation authorizations may be held by small entities, which may be affected by the decisions and rules adopted in this Order.

The Commission recently held auctions for geographic area licenses in the 900 MHz SMR band. There were 60 winning bidders who qualified as small entities in the 900 MHz auction. Based on this information, the Commission concludes that the number of geographic area SMR licensees affected by the rule adopted in this Order includes these 60 small entities. No auctions have been held for 800 MHz geographic area SMR licenses. Therefore, no small entities currently hold these licenses. A total of 525 licenses will be awarded for the upper 200 channels in the 800 MHz geographic area SMR auction. However, the Commission has not yet determined how many licenses will be awarded for the lower 230 channels in the 800 MHz geographic area SMR auction. There is no basis, moreover, on which to estimate how many small entities will win these licenses. Given that nearly all radiotelephone companies have fewer than 1,000 employees and that no reliable estimate of the number of prospective 800 MHz licensees can be made, the Commission assumes, for purposes of this IRFA, that all of the licenses may be awarded to small entities who, thus, may be affected by the decisions in this Order.

Resellers. Neither the Commission nor SBA has developed a definition of small entities specifically applicable to resellers. The closest applicable definition under SBA rules is for all telephone communications companies. The most reliable source of information regarding the number of resellers nationwide of which the Commission is aware appears to be the data that it collects annually in connection with the TRS. According to the Commission's most recent data, 206 companies reported that they were engaged in the resale of telephone services. Although it seems certain that some of these carriers are not independently owned and operated, or have more than 1,500 employees, the Commission is unable at this time to estimate with greater precision the number of resellers that would qualify as small business concerns under SBA's definition. Consequently, the Commission estimates that there are fewer than 206 small entity resellers that may be affected by the decisions and rules adopted in this Order.

2. Cable System Operators (SIC 4841)

Cable Systems: SBA has developed a definition of small entities for cable and other pay television services, which includes all such companies generating less than $11 million in revenue annually. This definition includes cable systems operators, closed circuit television services, direct broadcast satellite services, multipoint distribution systems, satellite master antenna systems and subscription television services. According to the Census Bureau, there were 1,323 such cable and other pay television services generating less than $11 million in revenue that were in operation for at least one year at the end of 1992.

The Commission has developed its own definition of a small cable system operator for the purposes of rate regulation. Under the Commission's rules, a ''small cable company,'' is one serving fewer than 400,000 subscribers nationwide. Based on the Commission's most recent information, the Commission estimates that there were 1,439 cable operators that qualified as small cable system operators at the end of 1995. Since then, some of those companies may have grown to serve over 400,000 subscribers, and others may have been involved in transactions that caused them to be combined with other cable operators. Consequently, the Commission estimates that there are fewer than 1,439 small entity cable system operators that may be affected by the decisions and rules adopted in this Order.

The Communications Act also contains a definition of a small cable system operator, which is ''a cable operator that, directly or through an affiliate, serves in the aggregate fewer than 1 percent of all subscribers in the United States and is not affiliated with any entity or entities whose gross annual revenues in the aggregate exceed $250,000,000.'' The Commission has determined that there are 61,700,000 subscribers in the United States. Therefore, the Commission found that an operator serving fewer than 617,000 subscribers shall be deemed a small operator, if its annual revenues, when combined with the total annual revenues of all of its affiliates, do not exceed $250 million in the aggregate. Based on available data, the Commission finds that the number of cable operators serving 617,000 subscribers or less totals 1,450. Although it seems certain that some of these cable system operators are affiliated with entities whose gross annual revenues exceed $250,000,000, the Commission is unable at this time to estimate with greater precision the number of cable system operators that would qualify as small cable operators under the definition in the Communications Act.

Description of Projected Reporting, Recordkeeping, and Other Compliance Requirements: Section 1.721 of the proposed rules would require all complainants to complete and submit a Formal Complaint Intake Form with their complaints. The intake form requirement is designed to help complainants avoid procedural and substantive defects that might affect the staff's ability to quickly process complaints and delay full responses by defendant carriers to otherwise legitimate complaints. In addition, the completed form should enable the staff and the defendant carriers to quickly identify the specific statutory provisions under which relief is being sought in the complaint. Because the proposed form would solicit information that would be already contained in the body of the formal complaint, no additional professional skills would be necessary to complete the form.

Potential Impact: Some of the proposed requirements in this Complaint NPRM may have a significant economic impact on small business entities. Generally, this Complaint NPRM proposes to require or encourage complainants and defendants to engage in certain pre-filing activities, change service requirements, modify the form of initial pleadings, shorten filing deadlines, eliminate certain pleading opportunities that do not appear useful or necessary, and modify the discovery process.

Pre-Filing Activities and Discovery: The Commission proposes to require a complainant to do the following: certify that it discussed the possibility of settlement with the defendant carrier's representative(s) prior to filing the complaint and attach certain written documentation. The Commission seeks comment on limiting discovery. The Commission also seeks comment on the feasibility of allowing the parties to a complaint proceeding to agree among themselves to a cost-recovery system as a basis for facilitating the prompt identification and exchange of information. While these proposed rules may place a greater burden on a small business entity to provide better legal and factual support early in the process, the Commission tentatively concludes that it does not significantly alter the level of evidentiary and legal support that would be ultimately required of parties in formal complaint actions pursuant to the current rules. It may, however, make it more difficult for all complainants, including small business, to gather the information needed to prevail on their complaints. Potentially higher initial costs may be somewhat offset by the prompt resolution of complaints and the avoidance of protracted and costly discovery proceedings and briefing requirements. It has been noted, for example, that the overall litigation costs of ''rocket docket'' cases in the U.S. District Court for the Eastern District of Virginia are lower than the costs of cases that take longer to resolve. Indeed, by requiring better and more complete submissions earlier in the process, this proposed rule reduces the need for discovery and other information filings, thereby significantly reducing the burden on small business entities. The Commission seeks comment on this tentative conclusion and any other potential impact of these proposals on small business entities.

Format and Content Requirements and Other Required Submissions: The Commission proposes to require parties to submit a joint statement of stipulated facts and key legal issues five days after the answer is filed. The Commission also proposes to require all pleadings that seek Commission orders, as well as the orders themselves, to contain proposed findings of fact and conclusions of law, with supporting legal analysis, and to require these submissions to be in both hard copy and on computer disks in ''read only'' mode and formatted in WordPerfect 5.1 for Windows, or as otherwise directed by the staff in particular cases. The Commission also proposes to require the complaint, answer, and any authorized reply to include: (1) the name, address and telephone number of each individual likely to have discoverable information relevant to the disputed facts alleged in the pleadings, identifying the subjects of information; and (2) a copy of, or a description by category and location of all documents, data compilations and tangible things in the possession, custody, or control of the party that are relevant to the disputed facts alleged with particularity in the pleadings. While these proposed rules may place a greater burden on a small business entity to provide better legal and factual support early in the process, the Commission tentatively concludes that it does not significantly alter the level of evidentiary and legal support that would be ultimately required of parties in formal complaint actions pursuant to the current rules. It may, however, make it more difficult for all complainants, including small business, to gather the information needed to prevail on their complaints. Potentially higher initial costs may be somewhat offset by the prompt resolution of complaints and the avoidance of protracted and costly discovery proceedings and briefing requirements. It has been noted, for example, that the overall litigation costs of ''rocket docket'' cases in the U.S. District Court for the Eastern District of Virginia are lower than the costs of cases that take longer to resolve. Indeed, by requiring better and more complete submissions earlier in the process, this proposed rule reduces the need for discovery and other information filings, thereby significantly reducing the burden on small business entities. The Commission seeks comment on this

tentative conclusion and any other potential impact of these proposals on small business entities.

Damages. The Commission proposes to allow bifurcation of liability and damages issues by permitting a complainant to file a supplemental complaint for damages after a finding of liability. In such a case, the Commission would defer adjudication of all damages issues until after a finding of liability. The Commission also proposes to require, in certain cases after liability has been found, defendants to place a sum of money in an interest-bearing escrow account, to cover part or all of the damages for which they may be found liable. While the bifurcation of liability and damages issues may require small business entities to postpone litigation of damages issues, any increased costs will be somewhat offset by the prompt resolution of the liability issues in complaints and the avoidance of protracted and costly discovery proceedings and briefing requirements in the initial proceeding. The proposal to require defendants to place a sum of money in an interest-bearing escrow account may have a significant economic impact on defendants that are small business entities without sufficient funds. The Commission seeks comment on this tentative conclusion and any other potential impact of these proposals on small business entities.

Significant Alternatives to the Proposed Rules Which Minimize Significant Economic Impact on Small Entities and Accomplish Stated Objectives: The Commission has included a proposal to waive many of the proposed pleading requirements with respect to complainants and other entities that can demonstrate good cause. Upon an appropriate showing of financial hardship or other public interest factors, the Commission proposes to waive format and content requirements under Section 1.721 of the rules. Furthermore, the proposed rules apply only to Section 208 complaints that are filed with the Commission. Complainants wishing to assure themselves of the ability to utilize full discovery, for example, are not precluded from filing their complaints in federal district court. The impact on small business entities of the proposal to require defendants to place a sum of money in an interest-bearing escrow account would be minimized by the fact that this measure would be implemented under standards similar to those used for determining whether a preliminary injunction is appropriate, *e.g.*, likelihood of success on the merits, irreparable harm, etc. In addition, the Complaint NPRM solicits comments on a variety of alternatives.

Federal Rules that May Overlap, Duplicate, or Conflict with the Proposed Rules: None.

Summary of Notice of Proposed Rule Making

I. Background

1. In February 1996, Congress passed and the President signed the ''Telecommunications Act of 1996'' (''1996 Act''). The 1996 Act prescribes deadlines ranging from 90 days to 5 months for the resolution of certain types of complaints against the Bell Operating Companies (''BOCs'') and other telecommunications carriers that are subject to the 1996 Act's requirements. The complaint provisions added by the 1996 Act that are relevant to this NPRM are Sections 208, 255, 260, 271, 274, and 275. This NPRM proposes rules necessary to implement those complaint resolution provisions.

II. Discussion

2. The NPRM seeks comment on changes to the Commission's current rules for processing formal complaints against carriers that would: (1) require or encourage complainants and defendants to engage in certain pre-filing activities designed to resolve or narrow issues and compile and/or exchange better factual information before resort to the complaint process; (2) eliminate delays in serving complaints on defendant carriers; (3) improve the format and content of complaints, answers and other pleadings filed by parties; (4) eliminate certain pleading opportunities that do not appear useful or necessary; and (5) limit or eliminate discovery.

A. Pre-Filing Procedures and Activities

3. The Commission asks interested parties to identify specific pre-filing activities available to potential complainants and defendants that could serve to settle or narrow disputes, or facilitate the compilation and exchange of relevant documentation or other information prior to the filing of a formal complaint with the Commission. The Commission proposes to require a complainant to certify that it discussed the possibility of settlement with the defendant carrier's representative(s) prior to filing the complaint.

4. The Commission also seeks comment on whether a committee composed of industry members would serve a needed role or useful purpose in addressing disputes over technical and other business disputes, before such disputes are brought before the Commission in the form of formal complaint actions that must be resolved under expedited procedures. Participation in a proceeding before such a committee would be strictly voluntary.

B. Service

5. The primary goal of the Commission in proposing changes to the current service procedures is to prevent the delay caused by those procedures, which implement the Section 208 requirement that the Commission serve formal complaints on defendant carriers. The Commission proposes to authorize or require a complainant to effect service simultaneously on the following persons: the defendant carrier, the Commission, and the appropriate staff office. The complainant would also be required to serve a copy of the complaint and associated attachments directly on the Chief of the division or branch responsible for handling the complaint. The Commission proposes to provide for a separate lock box at the Mellon Bank in Pittsburgh for complaints against wireless telecommunications service providers to help ensure the prompt receipt and handling of such complaints by the Wireless Telecommunications Bureau. The Commission also proposes to establish and maintain an electronic directory, available on the Internet, of agents authorized to receive service of complaints on behalf of carriers that are subject to the provisions of the Act.

6. In applying the requirement in Section 208 of the Act that the Commission serve the complaint on the defendant carrier, the staff routinely reviews complaints in the first instance and determines whether they meet the requirements under the Act and the Commission's rules. To accomplish this objective while eliminating the delay caused by having the Commission serve the defendant, the Commission also proposes to require a complainant to submit a completed intake form with any formal complaint as part of the filing requirement to indicate that the complaint meets the various threshold requirements for stating a cause of action under the Act and the Commission's rules. Finally, the Commission proposes to require parties to serve all subsequent pleadings by facsimile to be followed by mail delivery, or by overnight delivery.

C. Format and Content Requirements

7. The 1996 Act's complaint resolution deadlines necessitate substantial modification of the content requirements for pleadings filed in formal complaint proceedings. These

modifications must have the effect of creating complete records for the disposition of formal complaints. The Commission's overall goals are to improve the utility, quality, and content of the complaint, answer, and other filings submitted by parties in formal complaint cases and to expedite the issuance of orders that resolve procedural and substantive issues.

8. The Commission proposes to require any party to a formal complaint proceeding, in its complaint, answer, or any other pleading required during the complaint process, to include full statements of relevant facts, and to attach to such pleadings supporting documentation and affidavits of persons with knowledge of the facts stated in the pleadings. The Commission also proposes to require all pleadings that seek Commission orders, including complaints, answers, briefs, reply briefs, and motions, as well as the orders themselves, to contain findings of fact and conclusions of law, and to require these submissions to be in both hard copy and on computer disks in ''read only'' mode and formatted in WordPerfect 5.1 for Windows, or as otherwise directed by the staff in particular cases. In recognition of the fact that many of the proposed pleading requirements could be unduly burdensome on certain individuals or parties, the Commission proposes to waive format and content requirements upon an appropriate showing of financial hardship or other public interest factors. The Commission also proposes to require parties to append copies of relevant tariffs or tariff provisions that are relied upon in a pleading.

D. Answers

9. The Commission proposes to reduce the permissible time for a defendant to file an answer to a complaint from 30 to 20 days after service or receipt of the complaint.

E. Status Conferences

10. The Commission proposes to require that, unless otherwise ordered by the staff, an initial status conference take place in all formal complaint proceedings 10 business days after the defendant files its answer to the complaint. At the status conference, the Commission and parties may discuss claims and defenses, settlement possibilities, scheduling, whether discovery shall be permitted, and if so, a discovery plan. The parties would be required to memorialize jointly, in writing, any Commission rulings made during these status conferences.

F. Discovery

11. The Commission's goal in modifying the discovery rules is to limit or eliminate discovery while still permitting parties the opportunity to develop a sufficient record for resolution of their dispute. It is the Commission's belief that while the parties should continue to bear the burden of developing an adequate record, that burden should be borne earlier in the proceeding, upon the filing of the initial pleadings rather than upon discovery. Therefore the Commission seeks comment on limiting or eliminating discovery as a matter of right. It is anticipated that the proposed requirements for complaints, answers, and proposed stipulated facts will, in a majority of cases, present a sufficient factual record to enable the Commission to rely upon the initial pleadings alone to determine the outcome of the case. The Commission also seeks comment on the feasibility of allowing the parties to a complaint proceeding to agree among themselves to a cost-recovery system as a basis for facilitating the prompt identification and exchange of information.

12. The Commission also proposes to authorize the Bureau, on its own motion, to refer certain disputes to an administrative law judge for expedited hearing on factual issues.

G. Cease, Cease-and-Desist Orders and Other Forms of Interim Relief

13. The Commission sought comment on the legal and evidentiary standards necessary for obtaining cease or cease-and-desist orders pursuant to Title II of the Act and other forms of interim relief in Section 208 formal complaint cases, in order to expedite the issuance of cease or cease-and-desist orders within the 1996 Act's deadlines and to create more certainty regarding the legal and factual basis for granting interim relief.

H. Damages

14. The Commission's goal is to eliminate or minimize the delay endemic to the resolution of damages issues. The Commission proposes to allow bifurcation of liability and damages issues by permitting a complainant to file supplemental complaint for damages after a finding of liability. In such a case, the Commission would defer adjudication of all damages issues until after a finding of liability. This approach would enable the Commission to make a liability finding within the statutory deadline and still preserve the complainant's right to a damage award. The Commission also proposes to require that any complaint seeking an award of damages contain a detailed computation of damages, such that the Commission's adjudication of damages would end with a determination about the sufficiency of the computation formula submitted by the complainant rather than a finding as to the exact amount of damages, if any, owed to the complainant. The Commission also proposes to establish, following a finding of liability, a limited period during which the parties could engage in settlement negotiations or submit their damage claims to voluntary alternative dispute resolution mechanisms in lieu of further proceedings before the Commission. The Commission also seeks comment on a proposal to refer damages issues to an administrative law judge for decision once liability for damages has been determined by the Commission or if the parties agree to mediation by an administrative law judge. The Commission proposes to require, in certain cases after liability has been found, defendants to place a sum of money in an interest-bearing escrow account, to cover part or all of the damages for which they may be found liable.

I. Cross-Complaints and Counterclaims

15. The Commission proposes to allow compulsory counterclaims, those arising out of the same transaction or occurrence that is the subject matter of the opposing party's claim, only if the defendant files them concurrently with the answer. If a defendant fails to file such a compulsory counterclaim with its answer, it will be barred. A defendant may, but is not required to, file permissive counterclaims (those not arising out of the same transaction or occurrence) against the complainant. In addition, a defendant may, but is not required to, file cross-claims that arise out of the same transaction against co-parties. To the extent that the defendant elects to file such permissive counterclaims and cross-claims, it must file these pleadings concurrently with its answer. The defendant always has the option of filing any barred permissive counterclaims or cross-claims in a separate proceeding, provided that the statute of limitations has not run.

16. In addition, the Commission will revise its rules to clarify the applicability of filing fees to both complaints and cross-complaints.

J. Replies

17. The Commission proposes to prohibit replies to oppositions to motions. The Commission also proposes to prohibit replies to answers unless

specifically authorized by the Commission, generally upon a complainant's motion showing that there is good cause to reply to affirmative defenses that are supported by factual allegations that are different from any denials also contained in the answer.

K. Motions

18. In cases where discovery is conducted, the Commission proposes to require parties filing Motions to Compel to certify that they have made a good faith attempt to resolve the matter before filing the motion, in order to limit Commission involvement in conflicts that should be easily resolved. The Commission also proposes to make failure to file an opposition to a motion possible grounds for granting the motion, as well as shorten the deadline for filing oppositions to motions from ten to five business days. Finally, the Commission proposes to prohibit amendment of complaints except for changes necessary under 47 CFR § 1.720(g), which requires that information and supporting authority be current and updated as necessary in a timely manner.

L. Confidential or Proprietary Information and Materials

19. The Commission proposes to allow parties to designate as proprietary any materials generated in the course of a formal complaint, and not limit such designation to materials produced in response to discovery. The Commission also seeks comment on whether additional protections are needed in light of the short complaint resolution deadlines in the 1996 Act and the Commission's proposals in this NPRM to eliminate certain pleading and discovery opportunities.

M. Other Required Submissions

20. The Commission proposes to require parties to submit a joint statement of stipulated facts and key legal issues five days after the answer is filed. The Commission feels that drafting such a statement would promote agreement on a significant number of the disputed facts and legal issues, and that the statement itself would serve as a guide for the Commission to determine whether discovery is necessary in a particular case. Additionally, the Commission seeks comment on streamlining the current briefing process by prohibiting the filing of briefs in cases where discovery is not conducted, by continuing to allow the parties to file briefs, but permitting the staff to limit the scope of such briefs, or by shortening the deadline by which briefs are due. The Commission proposes to limit the page length of briefs to 25 pages for initial briefs and 10 pages for reply briefs.

N. Sanctions

21. The Commission seeks comment on what sanctions and/or remedies would be necessary or appropriate to ensure full compliance with and satisfaction of the proposed rule requirements.

O. Other Matters

22. The Commission seeks comment on two matters presented by certain language in Section 271 relative to other complaint provisions in the Act. First, the Commission sought comment on its tentative conclusion that the phrase ''act on'' as used in Section 271(d)(6)(B) encompasses actions taken by the Bureau and need not necessarily be final action by the Commission. Second, the Commission noted that the 90-day complaint resolution deadline for Section 271(d) complaints applies only in the absence of an agreement otherwise by the parties to the complaint action. The Commission sought comment on specific procedures and timetables that could be employed to ensure early notification to the Commission of waivers or extension agreements under Section 271(d)(6)(B) and to avoid the unnecessary expenditure of time and resources by the staff and parties to such a complaint action.

III. Comments and Ex Parte Requirements

23. Pursuant to Sections 1.415 and 1.419 of the Commission's rules, 47 CFR §§ 1.415, 1.419, all interested parties may file comments on the matters discussed in the NPRM and on proposed rules contained in the appendices by January 6, 1997 and reply comments on or before January 31, 1997. Parties are also invited to submit, in conjunction with their comments or reply comments, proposed text for rules that the Commission could adopt in this proceeding. Specific rule proposals should be filed as an appendix to a party's comments or reply comments. Such appendices may include only proposed text for rules that would implement proposals set forth in the parties' comments and reply comments in this proceeding, and may not include any comments or arguments. Proposed rules should be provided in the format used for rules in the Code of Federal Regulations, and should otherwise conform to the Comment Filing Procedures set forth in this NPRM.

24. To file formally in this proceeding, participants must file an original and six copies of all comments, reply comments, and supporting comments. If participants want each Commissioner to receive a personal copy of their comments, they must file an original and nine copies. In addition, participants are encouraged to submit two additional copies directly to the Common Carrier Bureau, Enforcement Division, Room 6008, 2025 M Street, N.W., Washington, D.C. 20554. Comments and reply comments should be sent to the Office of the Secretary, Federal Communications Commission, 1919 M Street, N.W., Room 222, Washington, D.C. 20554. Parties should also file one copy of any documents filed in this docket with the Commission's copy contractor, International Transcription Services, Inc., 2100 M Street, N.W., Suite 140, Washington, D.C. 20037. Comments and reply comments will be available for public inspection during regular business hours in the FCC Reference Center, 1919 M Street, N.W., Room 239, Washington, D.C. 20554.

25. In order to facilitate review of comments and reply comments, both by parties and the Commission, comments and reply comments should include a summary of the substantive arguments raised in the pleading.

26. Parties are also asked to submit comments and reply comments on diskette. Such diskette submissions would be in addition to the formal filing requirements addressed above. Parties submitting diskettes should submit them to Anita Cheng, Common Carrier Bureau, Enforcement Division, Room 6008, 2025 M Street, N.W., Washington, D.C. 20554. Each disk must be a standard 3½'' magnetic disk, formatted to be readable by high-density 1.44 MB floppy drives operating under MS-DOS (3.X or later versions). Participants are encouraged to submit documents formatted in WordPerfect 5.1 for Windows. Otherwise, parties must submit the documents formatted in both ASCII and any word processing program. The diskette should be submitted in ''read only'' mode. The diskette should be clearly labelled with the party's name, proceeding, type of pleading (comment or reply comments) and date of submission. The diskette should be accompanied by a cover letter.

27. This is a non-restricted notice and comment rule making proceeding. Ex parte presentations are permitted, except during the Sunshine Agenda period, provided they are disclosed as provided in Commission rules. See

generally 47 CFR §§ 1.1202, 1.1203, and 1.1206(a).

IV. Conclusion

28. In this NPRM, the Commission proposes to amend its rules governing the filing of formal complaints to implement certain complaint provisions in the 1996 Act and establish procedures necessary to facilitate the full and fair resolution of complaints filed under such provisions within the deadlines established by the Telecommunications Act of 1996. The Commission's goal is to establish rules of practice and procedure which, by providing a forum for prompt resolution of complaints of unreasonable, discriminatory, or otherwise unlawful conduct by telecommunications carriers, will foster rather than impede robust competition in all telecommunications markets.

VI. Ordering Clauses

29. Accordingly, *it is ordered* that pursuant to Sections 1, 4, 201–205, 208, 215, 218, 220 of the Communications Act of 1934, as amended, 47 U.S.C. §§ 151, 154, 201–205, 208, 215, 218 and 220, a *notice of proposed rulemaking* is hereby *adopted*.

30. *It is further ordered* that the Chief of the Common Carrier Bureau is delegated authority to require the submission of additional information, make further inquiries, and modify the dates and procedures if necessary to provide for a more complete record and a more efficient proceeding.

31. *It is further ordered* that the Secretary shall cause a copy of this NPRM, including the Initial Regulatory Flexibility Analysis, to be sent to the Chief Counsel for Advocacy of the Small Business Administration in accordance with Section 603(a) of the Regulatory Flexibility Act, 5 U.S.C. Section 603(a) (1981). The Secretary shall also cause a summary of this Notice to appear in the Federal Register.

List of Subjects

47 CFR Part 0

Organization and functions (Government agencies).

47 CFR Part 1

Communications common carriers.

Federal Communications Commission.

Shirley S. Suggs,

Chief, Publications Branch.

Rule Changes

Parts 0 and 1 of Title 47 of the Code of Federal Regulations are proposed to be amended as follows:

PART 0—COMMISSION ORGANIZATION

1. The authority citation for Part 0 continues to read as follows:

Authority: Sec. 5, 48 Stat. 1068, as amended, 47 U.S.C. 155, 225, unless otherwise noted.

2. Section 0.291 is proposed to be amended by revising paragraph (d) to read as follows:

§ 0.291 Authority delegated.

* * * * *

(d) *Authority to designate for hearing.* The Chief, Common Carrier Bureau shall not have authority to designate for hearing any formal complaints which present novel questions of law or policy which cannot be resolved under outstanding precedents or guidelines. The Chief, Common Carrier Bureau shall not have authority to designate for hearing any applications except applications for facilities where the issues presented relate solely to whether the applicant has complied with outstanding precedents and guidelines.

* * * * *

PART 1—PRACTICE AND PROCEDURE

3. The authority citation for Part 1 continues to read as follows:

Authority: 47 U.S.C. 151, 154, 303, and 309(j) unless otherwise noted.

4. Section 1.47 is proposed to be amended by revising paragraph (b) and adding new paragraph (h) to read as follows:

§ 1.47 Service of documents and proof of service.

* * * * *

(b) Where any person is required to serve any document filed with the Commission, service shall be made by that person or by his representative on or before the day on which the document is filed.

* * * * *

(h) Every carrier subject to the Communications Act of 1934, as amended, shall designate an agent in the District of Columbia, upon whom service of all notices, process, orders, decisions, and requirements of the Commission may be made for and on behalf of said carrier in any proceeding pending before the Commission. Such designation shall be filed, and updated as necessary, in writing and electronically in the office of the secretary of the Commission. Service of all notices, process, orders, decisions, and requirements of the Commission may be made upon such carrier by leaving a copy thereof with such designated agent at his office or usual place of residence in the District of Columbia. If a carrier fails to designate such an agent, service of any notice or other process in any proceeding before the Commission, or of any order, decision, or requirement of the Commission, may be made by posting such notice, process, order, requirement, or decision in the office of the secretary of the Commission.

5. Section 1.720 is proposed to be amended by revising the introductory paragraph and paragraph (h) to read as follows:

§ 1.720 General pleading requirements.

Formal complaint proceedings are generally resolved on a written record consisting of a complaint, answer, and statement of stipulated facts, but may also include other written submissions such as briefs and responses to written interrogatories. The Bureau in its discretion may designate formal complaint proceedings for resolution by hearing before an Administrative Law Judge, or where appropriate, it may refer certain issues of fact to an Administrative Law Judge for expedited hearing, while responsibility for the overall resolution of the proceeding is retained by the responsible Bureau. All written submissions, both substantively and procedurally, must conform to the following standards:

* * * * *

(h) Specific reference must be made to any tariff provision relied on in support of a claim or defense. Copies of relevant tariffs or relevant portions of tariffs that are relied upon in a pleading shall be appended to the pleading.

* * * * *

6. Section 1.721 is proposed to be amended by revising paragraphs (a)(5), (a)(6), (a)(7), (a)(8), adding paragraphs (a)(9), (a)(10), (a)(11), (a)(12), and adding paragraph (c) to read as follows:

§ 1.721 Format and content.

(a) * * *

(5) A complete statement of facts which, if proven true, would constitute such a violation. All facts must be supported, pursuant to § 1.720(c), by relevant affidavits and documentation, including copies of all applicable agreements, offers, counter-offers, denials, or other relevant correspondence.

(6) Complete detailed explanation of the manner in which a defendant has violated the Act, Commission order, or Commission rule in question, including identification or description and relevant time period, of the communications, transmissions, services, or other carrier conduct

complained of and nature of the injury sustained;

(7) The relief sought, including recovery of damages and the amount of damages claimed, if known;

(8) Certification that each complainant has discussed the possibility of settlement with each defendant prior to the filing of the formal complaint;

(9) Whether suit has been filed in any court or other government agency on the basis of the same cause of action, or whether the complaint itself seeks prospective relief identical to the relief proposed or at issue in a notice-and-comment proceeding that is concurrently before the Commission;

(10) A copy of, or a description by category and location of all documents, data compilations and tangible things in the complainant's possession, custody or control that are relevant to the disputed facts alleged with particularity in the complaint. The complaint may also include an explanation of why any relevant documents are believed to be confidential.

(11) The name, address and telephone number of each individual likely to have discoverable information relevant to the disputed facts alleged with particularity in the complaint, identifying the subjects of information; and

(12) A completed Formal Complaint Intake Form.

* * * * *

(c) Upon showing of good cause by the complainant, the Commission may waive any of the requirements of this section.

Section 1.722 is proposed to be amended by revising the introductory text of paragraph (b) and adding paragraphs (c) and (d) to read as follows:

§ 1.722 Damages.

* * * * *

(b) Damages will not be awarded upon a complaint unless specifically requested. Damages may be awarded, however, upon a supplemental complaint as described more fully in paragraph (c) of this section, based upon a finding of the Commission in the original proceeding. *Provided that:*

* * * * *

(c) In all cases in which recovery of damages is sought, it shall be the responsibility of the complainant to provide a computation of each and every category of damages for which recovery is sought, along with an identification of all relevant documents and materials or such other evidence to be used by the complainant to determine the amount of such damages.

(1) Where the recovery of damages is sought on the original complaint, such original complaint must include the computation of damages and identification of documents, materials and other evidence to be used in such computation described in paragraph (c) of this section.

(2) A complainant electing to seek damages upon a supplemental complaint as provided in paragraph (b) of this section must clearly and unequivocally state such election in the original complaint. In cases in which a complainant clearly and unequivocally states its election to seek damages upon supplemental complaint, the computation and identification of all relevant documents, materials and other evidence described in paragraph (c) of this section need not be provided until such time the complainant files its supplemental complaint.

(3) Where a complainant voluntarily elects to seek the recovery of damages upon a supplemental complaint, the Commission will resolve the liability complaint within the relevant complaint resolution deadlines contained in the Act and defer adjudication of the damage complaint until after the liability complaint has been resolved.

(d) Where a complainant elects in its original complaint to seek the recovery of damages upon a supplemental complaint, the following procedures may apply in the event the Commission determines liability based upon its review of the original complaint:

(1) If the parties agree, issues concerning the amount, if any, of damages may be submitted for mediation to a Commission Administrative Law Judge. Such Administrative Law Judge shall be chosen in the following manner:

(i) By agreement of the parties and the Chief Administrative Law Judge; or

(ii) In the absence of such agreement, the Chief Administrative Law Judge shall designate the Administrative Law Judge.

(2) After the defendant has been determined to be liable in such bifurcated proceeding, the Commission may order the defendant to deposit into an interest bearing escrow account a sum equal to the amount of damages which it finds, upon preliminary investigation, is likely to be ordered after the issue of damages is fully litigated, or some lesser sum which may be appropriate, provided the Commission finds that the grant of this relief is favored on balance upon consideration of the following factors:

(i) Complainant's potential irreparable injury in the absence of such deposit;

(ii) The likelihood that the amount of damages ordered at the conclusion of litigation will be equal to or greater than the amount deposited;

(iii) The balance of the hardships between complainant and defendant; and

(iv) Whether public interest considerations favor the ordering of the deposit.

8. Section 1.724 is proposed to be amended by revising paragraphs (a), (b), and (c) and adding new paragraphs (f), (g) and (h) to read as follows:

§ 1.724 Answers.

(a) Any carrier upon which a copy of a formal complaint is served under this subpart shall answer within 20 days of service of the formal complaint, unless otherwise directed by the Commission.

(b) The answer shall advise the complainant and the Commission fully and completely of the nature of any defense, and shall respond specifically to all material allegations of the complaint. Every effort should be made to narrow the issues in the answer. Any defendant failing to file and serve an answer within the time and in the manner prescribed by this part may be deemed in default and an order may be entered against the defendant in accordance with the allegations contained in the complaint.

(c) The defendant shall state concisely its defenses to each claim asserted and shall admit or deny the averments on which the complainant relies. If the defendant is without knowledge or information sufficient to form a belief as to the truth of an averment, the defendant shall so state and this has the effect of a denial. When a defendant intends in good faith to deny only part of an averment, the defendant shall specify so much of it as is true and shall deny only the remainder. The defendant may make its denials as specific denials of designated averments or paragraphs. General denials are prohibited.

* * * * *

(f) The answer shall include a copy of, or a description by category and location of all documents, data compilations and tangible things in the defendant's possession, custody or control that are relevant to the disputed facts alleged with particularity in the pleadings. The answer may also include an explanation of why any relevant documents are believed to be confidential.

(g) The answer shall also list the name, address and telephone number of each individual likely to have discoverable information relevant to the disputed facts alleged with particularity

in the pleadings, identifying the subjects of information.

(h) Upon showing of good cause by the defendant, the Commission may waive any of the requirements of this section.

9. Section 1.725 is proposed to be revised to read as follows:

§ 1.725 Cross-complaints and counterclaims.

(a) Compulsory counterclaims, those claims arising out of the transaction or occurrence that is the subject matter of the complaint and does not require for its adjudication the presence of third parties of whom the court cannot acquire jurisdiction, must be filed concurrently with the answer or it will be barred.

(b) Permissive counterclaims, those claims not arising out of the transaction or occurrence that is the subject matter of the complaint, must be filed concurrently with the answer in order to be resolved in the same proceeding. If not filed concurrently with the answer, however, the defendant will not be barred from filing such claim in a separate proceeding, provided that the statute of limitations has not run.

(c) Cross-complaints, claims by one party against a co-party arising out of the same transaction or occurrence that is the subject matter of either the complaint or counterclaim therein or relating to any property that is the subject matter of the original matter, must be filed concurrently with the answer in order to be resolved in the same proceeding. If not filed concurrently with the answer, however, the co-party will not be barred from filing such claim in a separate proceeding, provided the statute of limitations has not run.

10. Section 1.726 is proposed to be revised to read as follows:

§ 1.726 Replies.

(a) Replies are prohibited unless authorized by the Commission for good cause shown. If no reply is submitted, the complainant will be deemed to have denied the affirmative defenses.

(b) A complainant wishing to submit a reply must, within five days after the service of the answer, file a motion seeking leave to do so. A copy of the complainant's proposed reply should accompany its motion. A complainant's reply shall respond only to the specific factual allegations made by the defendant supporting its affirmative defenses. Replies which contain other allegations or arguments will not be accepted or considered by the Commission.

(c) Replies shall be accompanied by a copy of, or a description by category and location of all documents, data compilations and tangible things in the complainant's possession, custody or control that are relevant to the disputed facts alleged with particularity in the pleadings. The reply may also include an explanation of why any relevant documents are believed to be confidential. Replies shall also include the name, address and telephone number of each individual likely to have discoverable information relevant to the disputed facts alleged with particularity in the pleadings, identifying the subjects of information.

11. Section 1.727 is proposed to be amended by revising paragraphs (b), (c), (d), and (e) and adding new paragraphs (g) and (h) to read as follows:

§ 1. 727 Motions.

* * * * *

(b) Motions that the allegations in the complaint be made more definite and certain are prohibited.

(c) The moving party shall provide a proposed order for adoption, which appropriately incorporates the basis therefor, including proposed findings of fact and conclusions of law relevant to the pleading. The proposed order shall be clearly marked as a ''proposed order.'' The proposed order shall be submitted both as a hard copy and on computer disk in accordance with the requirements of § 1.734(d). The proposed order format should conform to that of a reported FCC order.

(d) A party opposing any motion shall also provide a proposed order for adoption, which appropriately incorporates the basis therefor. The proposed order shall be clearly captioned as a ''Proposed Order.'' The proposed order shall be submitted both as a hard copy and on computer disk in accordance with the requirements of § 1.734(d). The proposed order format should conform to that of a reported FCC order.

(e) Oppositions to motions may be filed within five days after the motion is filed. Oppositions shall be limited to the specific issues and allegations contained in the motion; when a motion is incorporated in an answer to a complaint, an opposition to the motion shall not address any issues presented in the answer that are not also specifically raised in the motion. Failure to oppose any motion may constitute grounds for granting of the motion.

* * * * *

(g) All motions must contain proposed findings of fact and conclusions of law, with supporting legal analysis, relevant to the content of the pleading. All facts relied upon in motions must be supported by documentation or affidavits pursuant to § 1.720(c), except for those facts of which official notice may be taken. Assertions based on information and belief are prohibited.

(h) Amendments or supplements to complaints to add new claims or requests for relief are prohibited. Parties are responsible, however, for the continuing accuracy and completeness of all information and supporting authority furnished in a pending complaint proceeding as required under § 1.720(g).

§ 1.730 [Removed]

12. Section 1.730 is proposed to be removed.

13. Section 1.731 is proposed to be amended by revising the section heading and paragraph (a) to read as follows:

§ 1.731 Confidentiality of information produced or exchanged by the parties.

(a) Any materials generated in the course of a formal complaint proceeding may be designated as proprietary by that party if the party believes in good faith that the materials fall within an exemption to disclosure contained in the Freedom of Information Act (FOIA), 5 U.S.C. 552(b) (1) through (9). Any party asserting confidentiality for such materials shall so indicate by clearly marking each page, or portion thereof, for which a proprietary designation is claimed. If a proprietary designation is challenged, the party claiming confidentiality shall have the burden of demonstrating, by a preponderance of the evidence, that the material designated as proprietary falls under the standards for nondisclosure enunciated in the FOIA.

* * * * *

Section 1.732 is proposed to be amended by revising paragraphs (b), (c), and (d) and adding new paragraph (h) to read as follows:

§ 1.732 Other required written submissions.

* * * * *

(b) In cases when discovery is not conducted, briefs shall be filed concurrently by both complainant and defendant within 90 days from the date a complaint is served. Such briefs shall be no longer than 25 pages.

(c) In cases when discovery is conducted, briefs shall be filed concurrently by both complainant and defendant at such time designated by the staff, typically within 30 days after discovery is completed.

(d) Reply briefs may be submitted by either party within 20 days from the

date initial briefs are due. Reply briefs shall be no longer than 10 pages.

* * * * *

(h) Within 5 days after the answer is filed, the parties shall submit a joint statement of stipulated facts and key legal issues.

15. Section 1.733 is proposed to be amended by revising paragraphs (a) introductory text, (a)(2), (a)(4), (a)(5), (a)(6), (b), and (c) to read as follows:

§ 1.733 Status conference.

(a) In any complaint proceeding, the Commission may, in its discretion, direct the attorneys and/or the parties to appear before it for a status conference. Unless otherwise ordered by the Commission, an initial status conference shall take place within ten business days after the answer is filed, unless otherwise directed by the staff. A status conference may include discussion of:

* * * * *

(2) The necessity for or desirability of additional pleadings or evidentiary submissions;

* * * * *

(4) Settlement of all or some of the matters in controversy by agreement of the parties;

(5) Whether discovery is necessary and, if so, the scope, type and schedule for any discovery;

(6) The schedule for the remainder of the case and the date for further conferences; and

* * * * *

(b) In addition to the status conference referenced in paragraph (a) of this section, any party may also request that a conference be held at any time after the complaint has been filed.

(c) During a status conference, the Commission may issue oral rulings pertaining to a variety of interlocutory matters relevant to the conduct of a formal complaint proceeding including, *inter alia*, procedural matters, discovery, and the submission of briefs or other evidentiary materials. Within 24 hours after a status conference, the parties in attendance, unless otherwise directed, must submit a joint proposed order memorializing the oral rulings made during the conference to the Commission. Commission staff will review and make revisions, if necessary, prior to signing and filing the submission as part of the record. Parties may, but are not required to, tape record the Commission's summary of its oral rulings. Alternatively, parties may use a stenographer to transcribe the oral presentations and exchanges between and among the participating parties, insofar as such communications are not ''off-the-record.'' The cost of such stenographer will be shared equally by the parties.

* * * * *

16. Section 1.734 is proposed to be amended by revising paragraph (c) and adding new paragraph (d) to read as follows:

§ 1.734 Specifications as to pleadings, briefs, and other documents; subscription.

* * * * *

(c) The original of all pleadings and other submissions filed by any party shall be signed by that party, or by the party's attorney. The signing party shall state his or her address, telephone number, facsimile number and the date on which the document was signed. Copies should be conformed to the original. Except when otherwise specifically provided by rule or statute, pleadings need not be verified. The signature of an attorney or party shall be a certificate that the attorney or party has read the pleading, motion, or other paper; that to the best of his or her knowledge, information, and belief formed after reasonable inquiry, it is well grounded in fact and is warranted by existing law or a good faith argument for the extension, modification, or reversal of existing law; and that it is not interposed solely for purposes of delay or for any other improper purpose.

(d) All proposed orders shall be submitted both as hard copies and on a 3.5 inch diskette formatted in an IBM compatible form using MS-DOS 5.0 and WordPerfect 5.1 software. The diskette should be submitted in ''read only'' mode. The diskette should be clearly labelled with the party's name, proceeding, type of pleading, and date of submission. The diskette should be accompanied by a cover letter. Parties who have submitted copies of tariffs or reports with their hard copies need not include such tariffs or reports on the magnetic disk.

17. Section 1.735 is proposed to be amended by revising paragraphs (b), (d) and (e) to read as follows:

§ 1.735 Copies; service; separate filings against multiple defendants.

* * * * *

(b) The complainant must file an original plus three copies of the complaint, accompanied by the correct fee, in accordance with subpart G of this part. See 47 CFR 1.1105(1)(c). However, if a complaint is addressed against multiple defendants, the complainant shall pay a separate fee and supply three additional copies of the complaint for each additional defendant. For complaints filed with the Common Carrier Bureau, the complainant must also serve a copy on the Chief, Formal Complaints and Investigations Branch. For complaints filed with the Wireless Telecommunications Bureau, the complainant must also serve a copy on the Chief, Enforcement Division. For complaints filed with the International Bureau, the complainant must also serve a copy on the Chief, Telecommunications Division. The requirements of this paragraph also apply to defendants filing cross-complaints.

* * * * *

(d) The complainant shall serve the complaint on the named defendant's registered agent for service of process. If filing a cross-complaint, the defendant/cross-complainant shall serve such cross-complaint on the named cross-defendant's registered agent for service of process and all counsel of record in the complaint proceeding.

(e) All subsequent pleadings and briefs filed in any formal complaint proceeding, as well as all letters, documents or other written submissions, shall be served either by overnight delivery or by facsimile and followed by mail, by the filing party on the counsel of record of all other parties to the proceeding, together with a proof of such service in accordance with the requirements of § 1.47(g).

* * * * *

18. Section 1.1105 is proposed to be amended by revising the entry (1)(c), and adding (1)(d) to read as follows:

§ 1.1105 Schedule of charges for applications and other filings in the common carrier services.

Action	FCC form No.	Fee amount	Payment type code	Address
1. * * *				
c. Formal Complaints/Cross-Complaints and Pole Attachment Compaints/Cross-Complaints, except those relating to wireless telecommunications services, Filing Fee..	Corr. and 159	150	.....	CIZ Federal Communication Commission, Common Carrier Enforcement, P.O. Box 358120, Pittsburgh, PA 15251-5120.

Action	FCC form No.	Fee amount	Payment type code	Address
d. Formal Complaints/Cross-Complaints relating to wireless telecommunications services, including cellualr telephone, paging, personal communications services, and other commercial mobile radio services, Filing Fee..	Corr. and 159	150	CIZ	Federal Communications Commission, Wireless Telecommunications Bureau, P.O.Box 358128, Pittsburgh, PA 15251–5120.

* * * * * *

Attachment to the Proposed Rule

FORMAL COMPLAINT INTAKE FORM

Case Name: _____

Complainant Name, Address, Phone and Facsimile Number:

_____

_____

_____

_____

Complaint alleges violation of the following provisions of the Communications Act of 1934, as amended: _____

Answer (Y)es, (N)o or N/A to the following:

____ Complaint conforms to the specifications prescribed by 47 CFR §§ 1.49, 1.734.

____ Complaint complies with the pleading requirements of 47 CFR § 1.720.

____ Complaint conforms to the format and content requirements of 47 CFR § 1.721:

____ Complaint contains a detailed explanation of the manner in which the defendant violated the provisions of the Communications Act of 1934, as amended.

____ Relevant documentation and/or affidavits is attached, including agreements, offers, counter-offers, denials, or other relevant correspondence.

____ Contains certification that complainant has discussed the possibility of settlement with each defendant prior to the filing of the formal complaint.

____ Suit has been filed in another court or government agency on the basis of the same cause of action. If yes, please explain: _____

____ Seeks prospective relief identical to the relief proposed or at issue in a notice-and-comment proceeding that is concurrently before the Commission. If yes, please explain: _____

____ If damages are sought, contains specified amount and nature of damages claimed.

____ Contains a copy of, or a description by category and location of all documents, data compilations and tangible things in the complainant's possession, custody or control that are relevant to the disputed facts alleged with particularity in the complaint.

____ Contains the name, address and telephone number of each individual likely to have discoverable information relevant to the disputed facts alleged with particularity in the complaint, identifying the subjects of information.

____ All reported FCC orders relied upon have been properly cited in accordance with Section 1.14 of the Commission's Rules, Title 47 Code of Federal Regulations, 47 CFR § 1.14.

____ Copies of cited non-FCC authority are attached.

____ Copy of complaint has been served on defendant's registered agent for service in accordance with [to be amended] 47 CFR § 1.47(b).

____ If more than 10 pages, the complaint contains a table of contents as specified in 47 CFR § 1.49(b).

____ The correct number of copies, required by 47 CFR § 1.51(c)(2) and 47 CFR § 1.51(c)(2) if applicable, have been filed.

____ Complaint has been properly signed and verified in accordance with 47 CFR § 1.52.

____ $150.00 filing fee specified in 47 CFR § 1.1105(1)(c) is attached.

____ If complaint is by multiple complainants, it conforms with the requirements of 47 CFR § 1.723(a).

____ If complaint involves multiple grounds, it complies with the requirements of 47 CFR § 1.723(b).

____ If complaint is directed against multiple defendants, it complies with the requirements of 47 CFR § 1.735 (a)–(b).

[FR Doc. 96–32322 Filed 12–24–96; 8:45 am]

BILLING CODE 6712–01–P

DEPARTMENT OF COMMERCE

National Oceanic and Atmospheric Administration

50 CFR Part 679

[Docket No. 961203339–6339–01; I.D. 111896B]

RIN 0648–AI88

Fisheries of the Exclusive Economic Zone Off Alaska; Scallop Fishery Off Alaska; Scallop Vessel Moratorium

AGENCY: National Marine Fisheries Service (NMFS), National Oceanic and Atmospheric Administration (NOAA), Commerce.

ACTION: Proposed rule; request for comments.

SUMMARY: NMFS proposes a temporary moratorium on the entry of additional vessels into the scallop fishery off Alaska. This action would implement Amendment 2 to the Fishery Management Plan for the Scallop Fishery off Alaska (FMP) as recommended by the North Pacific Fishery Management Council (Council). The intended effect of Amendment 2 is to curtail increases in fishing capacity and to provide stability for industry while the Council develops a long-term limited access system for this fishery. This action is necessary to promote the conservation and management objectives of the FMP.

DATES: Comments must be received at the following address by February 10, 1997.

ADDRESSES: Comments on the proposed rule must be sent to Ronald J. Berg, Chief, Fisheries Management Division, Alaska Region, NMFS, P.O. Box 21668, Juneau, AK 99802, Attn: Lori J. Gravel. Copies of Amendment 2 and the Environmental Assessment/Regulatory Impact Review/Initial Regulatory Flexibility Analysis (EA/RIR/IRFA) prepared for this action may be obtained from the same address. Send comments regarding burden estimates or any other aspect of the data requirements, including suggestions for reducing the burdens, to NMFS and to the Office of Information and Regulatory Affairs, Office of Management and Budget (OMB), Washington, D.C. 20503, Attn: NOAA Desk Officer.

FOR FURTHER INFORMATION CONTACT: Kent Lind, 907–586–7228.

SUPPLEMENTARY INFORMATION:

Management Authority

The scallop fishery in the exclusive economic zone (EEZ) off Alaska is managed by NMFS under the FMP. The FMP was prepared by the Council under the Magnuson-Stevens Act and approved by NMFS on July 26, 1995. Regulations implementing the FMP are set out at 50 CFR part 679. General regulations that also affect fishing in the EEZ are set out at 50 CFR part 600.

The Council is authorized by the Magnuson-Stevens Act to establish a system for limiting access to a fishery in order to achieve optimum yield if, in developing such a system, the Council and NMFS take into account: (1) Present participation in the fishery, (2)

historical fishing practices in, and dependence on, the fishery, (3) the economics of the fishery, (4) the capability of fishing vessels used in the fishery to engage in other fisheries; (5) the cultural and social framework relevant to the fishery, and (6) any other relevant considerations (16 U.S.C. 1853).

Scallop Management Background

Management of scallops in the EEZ off Alaska was conducted by the Alaska State Department of Fish and Game (ADF&G) from 1968 until the implementation of the Federal FMP and an interim closure of the EEZ to fishing for scallops in 1995. In 1992, ADF&G developed an Interim Fishery Management Plan (IFMP) for scallops, as fishing effort was rapidly increasing and maximum sustainable yield may have been exceeded. The IFMP specified three major management measures: (1) Setting area-specific guideline harvest levels and gear restrictions to prevent localized overharvesting, (2) creating an observer program to monitor the fishery and obtain biological information, and (3) limiting effort via gear restrictions, seasons, minimum size limits, and other measures. Consistent with scallop management actions taken on the east coast, the State of Alaska (State) promulgated regulations that limit crew size to a total of 12, and mandated that weathervane scallops only be shucked manually to control effort. In 1993, the Commissioner of ADF&G declared scallops a High Impact Emerging Fishery (5 AAC 39.210) because of mounting resource concerns. A fishery may be regulated as a high impact emerging commercial fishery if the Commissioner determines that any of the following conditions apply to a species or species group in an area or region: (1) Harvesting effort has recently increased beyond a low sporadic level; (2) interest has been expressed in harvesting the resource by more than a single user group; (3) the level of harvest might be approaching a level that might not be sustainable on a local or regional level; and (4) comprehensive regulations to address issues of conservation, allocation, and conduct of an orderly fishery have not been developed.

In 1993, the Council also began to address the issues of overexploitation and overcapitalization in the scallop fishery. At the January 1993 meeting, the Council determined that the scallop fishery may require Federal management to protect the fishery from overexploitation and further overcapitalization. The Council set a control date of January 20, 1993, to notify the industry that a moratorium for this fishery may be implemented. This control date, which was published in the Council's newsletter, meant that fishermen and/or vessels not participating in the fishery by that date may not be guaranteed future access to the fishery.

The Council was presented with information indicating that the stocks of weathervane scallops were fully exploited and any increase in effort would be detrimental to the stocks and the Nation. Information indicated that dramatic changes in age composition had occurred after the fishing-up period (1980–90), with commensurate declines in harvest. In recent years, many fishermen abandoned historical fishing areas and searched for new areas to maintain catch levels. Increased numbers of small scallops were reported. Additionally, scallops are highly susceptible to overfishing and boom/bust cycles worldwide.

The need to limit access was the primary motivation for the Council to prepare the FMP in lieu of State management of the scallop fishery. As anticipated, effort in the scallop fishery increased in 1993 when 32 scallop permits, representing 21 vessels, were issued by the State. Fifteen of these vessels had made landings by the end of 1993. Even without additional vessels entering the fishery, the Council believed that the 1993 fishery was overcapitalized, meaning that too much capital was invested relative to the fleet size necessary to conduct the fishery. In 1992, seven vessels harvested 1.8 million lb (816 mt), for an average of 257,143 lb (116.6 mt) harvested per vessel. The 1993 quota was set at 890,000 lb (403.7 mt) for areas with specified guideline harvest levels, or about one-half of the 1992 landings. This quota could have been harvested by three or four vessels. In 1993, landings from areas without guideline harvest levels totaled 524,000 lb (237.7 mt), which could have been taken by an additional two vessels. Yet, 15 vessels participated in the 1993 fishery. In 1994, the growth trend in the fishery continued with 16 vessels harvesting 1,235,269 lb (560.3 mt) of scallops.

At its January 1993 meeting, the Council directed staff to proceed with an analysis to evaluate potential Federal management of Alaskan scallops. A vessel moratorium was proposed as an essential element of a Federal management regime to stabilize the size and capitalization of the scallop fleet during the time that the Council considers limited entry alternatives for this fishery.

At its June 1993 meeting, the Council and its advisory panels reviewed a draft EA/RIR/IRFA analysis of management alternatives for the scallop fishery. Also at that meeting, the Council reaffirmed the control date of January 20, 1993, and recommended several revisions to the draft analysis, which was subsequently released for public review on August 9, 1993. At the September 1993 Council meeting, public testimony was received on scallop management, particularly on the qualifying criteria for a moratorium. At that meeting, the Council tentatively identified its preferred alternative of a separate FMP for the scallop fishery, with shared management authority with the State. The preferred alternative also included a vessel moratorium option. However, the Council requested additional analysis to assist with determining appropriate qualifying criteria. Additional analysis was incorporated into the revised draft FMP, including a draft EA/RIR/IRFA, and was released for public review on November 30, 1993.

At its April 1994 meeting, the Council and its advisory bodies reviewed the draft FMP, took public testimony, and voted to adopt a separate FMP for the scallop fishery. Eighteen vessels would qualify under the criteria adopted by the Council in April 1994. The 1994 draft FMP, which deferred most management measures to the State, was based on the premise that all vessels fishing for scallops in the Federal waters off Alaska would also be registered with the State.

While regulations were being drafted to implement the FMP, a vessel that had nullified its registration with the State began fishing for scallops in the Federal waters of the Prince William Sound Registration Area, which the State had already closed after the guideline harvest level of 50,000 lb (22,686 kg) was taken on January 26, 1995. The State did not have authority to stop the vessel from fishing, because it was no longer registered with the State and was fishing in the EEZ. On February 17, 1995, the Council met by emergency teleconference and recommended that NMFS implement an emergency rule to close the EEZ off Alaska to scallop fishing to prevent further uncontrolled harvests in Federal waters. The emergency rule went into effect on February 23, 1995 and was published on March 1, 1995 (60 FR 11054).

At its April 1995 meeting, the Council took additional steps to prevent unregulated and uncontrolled harvests after the emergency rule expired. On April 19, 1995, the Council adopted an FMP, which continued the closure of the EEZ to fishing for scallops for a 1-year period. The FMP was approved by

NMFS on July 26, 1995. Additional information on the FMP and the interim closure of Federal waters to fishing for scallops may be found in the proposed and final rules implementing the FMP (60 FR 24822, May 10, 1995, and 60 FR 42070, August 15, 1995, respectively).

At its June 1995 meeting, the Council considered the testimony and recommendations of its Scientific and Statistical Committee, fishing industry representatives, and the general public on alternative management options for the scallop fishery to replace the interim closure. The Council also reviewed a revised EA/RIR/IRFA that outlined the potential impacts of a full Federal management regime, including a vessel moratorium based on the previously approved qualifying criteria. Based on the above information, the Council adopted Amendment 1 to the FMP authorizing a suite of Federal management measures, including the vessel moratorium.

In April 1996, the Council separated the scallop vessel moratorium from the other management measures contained in Amendment 1 and recommended instead that the moratorium proceed as Amendment 2 to the FMP. The Council took this action so that the development of a vessel moratorium would not delay the reopening of the fishery. Amendment 1 was subsequently approved by NMFS on July 10, 1996 (61 FR 38099, July 23, 1996).

Scallop Vessel Moratorium

The following paragraphs explain each aspect of the proposed scallop vessel moratorium.

Duration of the Moratorium

The temporary vessel moratorium would remain in effect for 3 years from the date of implementation or until repealed or replaced by a permanent limited access program. Amendment 2 would allow the Council to recommend that the moratorium be extended for no more than 2 years if a limited access program were imminent.

Qualification Criteria

Scallop moratorium permits would be issued to the person (or successor in interest) who owned the qualifying vessel when it most recently made qualifying landings. The Council indicated that when vessels were sold during or after the moratorium qualification period, the moratorium rights should attach to the owner of the vessel when it most recently made qualifying landings such that each vessel generates only one moratorium permit. The Council believed that moratorium rights should be assigned to the person who owned a vessel when it qualified for a moratorium permit rather than some subsequent owner who does not have a history of participation in the fishery with that vessel. The Council adopted this approach after the testimony of one scallop fisherman who had a long history of participation in the scallop fishery, but who had sold his qualified vessel prior to the announcement of a moratorium control date and had replaced it with a new vessel that would not qualify under the moratorium.

A vessel would qualify for inclusion in the moratorium if it made a legal landing of scallops during 1991, 1992 or 1993; or during at least 4 separate years from 1980 through 1990. The Council chose this two-tier approach to emphasize recent participation in the fishery by allowing all vessels with any legal landings in 1991, 1992, or 1993 to qualify. Historic participants would qualify under the more restrictive standard of a legal landing during at least 4 separate years from 1980 through 1990.

The Council adopted the 1980 start date for qualification of historic participants, because data prior to 1980 were not available. More important, 1980 marked the first year of the buildup of the scallop fishery and was thus considered to be a reasonable base year for historical participation. Less than three vessels participated in 1974, 1976, 1977, and 1979, and no vessels participated in 1978. The 1990 cutoff date for historic participation was chosen because vessels making landings in 1991, 1992, or 1993 would be included as recent participants. The Council did not include those vessels that participated in 1990, but that did not have sufficient historic participation or more recent participation in the fishery, as moratorium qualified. The Council determined that such vessels had neither recent nor historic dependence on the fishery. Vessels that were in the ''pipeline'' to fish for Alaskan scallops (i.e., under construction, being refitted, relocated, etc.) but that had not made a required landing, would not qualify under the moratorium. The Council had been discussing a scallop moratorium throughout 1993. The qualification period was extended from the January 20, 1993, control date to the end of 1993 to address the problem of vessels in the ''pipeline.''

The Council chose not to extend the moratorium qualifying period past 1993 in order to discourage speculative entry while the moratorium was being developed and submitted for review. Additional entry into the fishery during the development and implementation phase would only exacerbate the very problems that the moratorium is intended to solve. Fishermen received extensive notice through the Council process described above that the fishery was being limited in a way that jeopardized any investments they would make in the fishery after 1993. According to ADF&G landing records, at least three vessels have entered the scallop fishery since the moratorium cut-off date, and they would not qualify for moratorium permits. However, participation in the scallop fishery by these vessels has been sporadic. None of these vessels made a single landing during the entire moratorium qualification period of 1980–93, nor have they participated on a consistent basis since the moratorium cut-off date of December 31, 1993.

Area Endorsements

Moratorium permits would include area endorsements for fishing within Registration Area H (Cook Inlet) and/or waters outside Registration Area H. Qualified vessels should have made at least one legal landing of scallops during the qualifying period within an endorsement area to receive an endorsement for that area. No crossovers would be allowed between Registration Area H and waters outside Registration Area H unless a vessel qualifies in both areas.

The Council adopted the area endorsement approach in order to preserve the unique nature of the Cook Inlet scallop fishery, which is conducted exclusively by small boats operating out of Homer. The State has preserved the Cook Inlet scallop fishery as a distinct small boat fishery by limiting Cook Inlet vessels to a single 6–ft (1.83 m) dredge and exempting Cook Inlet vessels from the observer coverage requirements that are in effect for all other registration areas (§ 679.65(c)). According to ADF&G landing data, only one qualifying vessel fished both inside and outside Registration Area H during the qualifying period and would receive endorsements to fish in both areas.

Vessel Reconstruction and Maximum Length Overall (LOA)

To prevent increased capitalization in the scallop fishery, the Council chose to limit increases in vessel LOA due to the reconstruction of vessels during the moratorium to no more than 1.2 times or 20 percent of the LOA of the vessel on the control date of January 20, 1993. For vessels under reconstruction on January 20, 1993, the maximum LOA would be the LOA on the date reconstruction was completed, with no

additional increases allowed. Each scallop moratorium permit would specify a maximum LOA based on the above criteria.

The 20–percent limit was chosen by the Council for the same reasons that a 20–percent limit was established for the groundfish and crab vessel moratorium. The Council believed that limiting increases in vessel size to 20 percent of LOA would allow for some upgrading of vessels to improve stability and safety, while limiting the further overcapitalization that could occur through massive reconstruction of existing vessels.

Transferability

Moratorium permits would be valid on any vessel that is less than or equal to the maximum LOA identified on the permit and that is owned, leased, or operated by the person identified on the moratorium permit. A vessel fishing for scallops would be required to carry a valid moratorium permit on board whenever the vessel is fishing for scallops, or has scallops retained on board. A person could transfer a moratorium permit to another person if a completed transfer application were submitted to NMFS and subsequently approved. In this event, a new permit would be issued in the name of the person who received the transferred permit.

Exemptions

Vessels less than or equal to 26 ft (7.9 m) LOA in the Gulf of Alaska, and less than or equal to 32 ft (9.8 m) LOA in the Bering Sea and Aleutian Islands Area, would be exempt from the scallop moratorium when fishing for scallops with dive gear. The Council wanted to provide for the potential development of cleaner gear types such as dive gear and chose to adopt the same size limits exemption for small vessels as were established for the groundfish and crab vessel moratorium, except that the exemption only applies when fishing with dive gear. An operator of a vessel under the size limits listed above would still be required to carry a valid scallop moratorium permit on board when fishing with dredge gear, or from a vessel that has dredge gear on board.

While commercial harvesting of shellfish and sea cucumbers with dive gear does occur in Alaska waters, safety and technology factors generally limit this type of fishing to shallow, near-shore State waters. NMFS has no record of commercial divers harvesting scallops in Federal waters off Alaska and believes it is unlikely that any commercial divers would choose to attempt such an endeavor. Nevertheless, this exemption would ensure that a vessel moratorium designed to limit further overcapitalization by the dredge fleet would not prevent future exploration with dive gear.

Appeals

NMFS would issue an initial administrative determination to each applicant who is denied a scallop moratorium permit. An initial administrative determination may be appealed by the applicant in accordance with the procedures established for the groundfish and crab moratorium at § 679.43. An initial administrative determination that denies an application for a scallop moratorium permit would authorize the affected person to catch and retain scallops with an interim permit. The interim permit would expire on the effective date of the final agency action relating to the application. An administrative determination denying the issuance of a scallop moratorium permit or application for transfer would be the final agency action for purposes of judicial review.

Technical changes to existing regulations

This proposed rule contains technical changes to the existing definitions of ''legal landing'', ''maximum LOA'', ''moratorium qualification'', ''moratorium species'', and ''qualifying period'' set out at § 679.2. These technical changes would be made to clarify which terms apply only to the existing groundfish and crab moratorium and which terms also would apply to the scallop moratorium.

A technical change would also be made to the description of the groundfish and crab moratorium appeals process at § 679.4(c)(10)(i) to specify that appeals are to be sent to the Regional Administrator rather than to the Chief, RAM Division. This change is necessary to make § 679.4(c)(10)(i) consistent with the appeals process described at § 679.43(c). In addition, § 679.43(a) would be revised to indicate that the appeals process described at § 679.43 also applies to scallop moratorium appeals made under § 679.4(g).

Classification

At this time, NMFS has not determined that the FMP amendment that this rule would implement is consistent with the national standards, other provisions of the Magnuson-Stevens Act, and other applicable laws. NMFS, in making that determination will take into account the data, views, and comments received during the comment period.

This proposed rule has been determined to be not significant for the purposes of E.O. 12866.

This proposed rule contains a new collection-of-information requirement subject to the Paperwork Reduction Act (PRA). This collection-of-information requirement has been submitted to OMB for approval. The new information requirements include an application for a moratorium permit and an application for transfer of a moratorium permit. Public reporting burden for these collections of information are estimated to be 0.33 and 0.5 hours, respectively. Send comments regarding reporting burden or any other aspect of the data requirements, including suggestions for reducing the burdens, to NMFS and OMB (see **ADDRESSES**).

Notwithstanding any other provision of the law, no person is required to respond to, nor shall any person be subject to a penalty for failure to comply with, a collection of information subject to the requirements of the PRA, unless that collection of information displays a currently valid OMB control number.

An RIR was prepared for this proposed rule that describes the management background, the purpose and need for action, the management action alternatives, and the social impacts of the alternatives. The RIR also estimates the total number of small entities affected by this action and analyzes the economic impact on those small entities.

The Council prepared an IRFA as part of the RIR, which describes the impact this proposed rule would have on small entities, if adopted. The analysis shows that the economic effects of this proposed rule to the regulated community would be significant and positive. By limiting participation at current levels, the temporary moratorium would prevent further overcapitalization of the fleet and reduce the potential for overfishing of the scallop resource. Most commercial fishing vessels harvesting scallops off Alaska meet the definition of a small entity under the RFA. In 1994, 86 percent of the scallop harvests off Alaska were taken from Federal waters and 11 of the 16 vessels harvesting scallops participated in no other fishery. Eighteen vessels would qualify for the moratorium under the qualification criteria adopted by the Council. According to ADF&G landing records, at least three vessels have entered the scallop fishery since the moratorium cut-off date and would not qualify for moratorium permits. However, participation in the scallop fishery by

these three vessels has been sporadic. None of these vessels made a single landing during the entire moratorium qualification period of 1980–93, nor have they participated on a consistent basis since the moratorium cut-off date of December 31, 1993, and none of these three vessels has re-entered the fishery since the re-opening of Federal waters to February February fishing for scallops on August 1, 1996, under Amendment 1 to the FMP. Fishermen received extensive notice through the Council process that the fishery was being limited in a way that jeopardized any investments they made in the fishery after 1993. Copies of the EA/RIR/IRFA are available from NMFS (see **ADDRESSES**).

List of Subjects in 50 CFR Part 679

Fisheries, Reporting and recordkeeping requirements.

Dated: December 19, 1996.

Nancy Foster,

Deputy Assistant Administrator for Fisheries, National Marine Fisheries Service.

For the reasons set out in the preamble, 50 CFR part 679 is proposed to be amended as follows:

PART 679—FISHERIES OF THE EXCLUSIVE ECONOMIC ZONE OFF ALASKA

1. The authority citation for part 679 continues to read as follows:

Authority: 16 U.S.C. 1801 *et seq.*, 773 *et seq.*

2. In § 679.2, the definitions of ''Legal landing'', ''Maximum LOA'' introductory text, ''Moratorium qualification'', ''Moratorium species'', and ''Qualifying period'' are revised to read as follows:

§ 679.2 Definitions.

* * * * *

Legal landing (applicable through [insert date 3 years after the effective date of the final rule]) means any amount of a moratorium species that was or is landed in compliance with Federal and state commercial fishing regulations in effect at the time of the landing.

* * * * *

Maximum LOA (applicable through December 31, 1998), with respect to a vessel's eligibility for a groundfish or crab moratorium permit, means: * * *

* * * * *

Moratorium qualification (applicable through December 31, 1998) with respect to the groundfish and crab vessel moratorium program means a transferable prerequisite for a moratorium permit.

Moratorium species means:

(1) (Applicable through [insert date 3 years after the effective date of the final rule]) any scallop species.

(2) (Applicable through December 31, 1998) any moratorium crab species or moratorium groundfish species.

* * * * *

Qualifying period (applicable through December 31, 1998) with respect to the groundfish and crab vessel moratorium program means the period to qualify for the moratorium from January 1, 1988, through February 9, 1992.

* * * * *

3. In § 679.4, paragraph (c)(10)(i) is revised and a new paragraph (g) is added to read as follows:

§ 679.4 Permits.

* * * * *

(c) * * *

(10) *Appeal*—(i) *Determination*. The Chief, RAM Division, will issue an initial administrative determination to each applicant who is denied a moratorium permit by that official. An initial administrative determination may be appealed by the applicant in accordance with § 679.43. The initial administrative determination will be the final agency action if a written appeal is not received by the Regional Administrator, within the period specified at § 679.43.

* * * * *

(g) *Scallop moratorium permits* (applicable through [Insert date three years after the effective date of the final rule])—(1) *General*—(i) *Applicability*. Except as provided under paragraph (g)(2) of this section, any vessel used to take or retain any scallop species in Federal waters must have a valid scallop moratorium permit on board the vessel at all times when the vessel is engaged in fishing for scallops in Federal waters or has scallops taken from Federal waters retained on board. Any vessel used to take or retain scallops in Federal waters within Scallop Registration Area H must have a scallop moratorium permit endorsed for Registration Area H. Any vessel used to take or retain scallop species in Federal waters outside Registration Area H must have a scallop moratorium permit endorsed for Federal waters exclusive of Registration Area H.

(ii) *Duration*. The scallop moratorium permit is valid for the duration of the moratorium unless otherwise specified.

(iii) *Validity*. A scallop moratorium permit issued under this paragraph is valid only if:

(A) The vessel is owned, leased, or operated by the person named on the moratorium permit.

(B) The vessel's LOA does not exceed the maximum LOA specified on the permit.

(C) The permit has not been revoked or suspended under 15 CFR part 904.

(iv) *Inspection*. A scallop moratorium permit must be presented for inspection upon the request of any authorized officer.

(2) *Exemptions*. A vessel that has an LOA of less than or equal to 26 ft (7.9 m) in the GOA, and less than or equal to 32 ft (9.8 m) in the BSAI and that does not have dredge gear on board is exempt from the requirements of this paragraph (g) when fishing for scallops with dive gear.

(3) *Qualification criteria*—(i) *Qualifying period*. A vessel would qualify for a moratorium permit if the vessel made a legal landing of scallops during 1991, 1992 or 1993 or during at least 4 separate years from 1980 through 1990.

(ii) *Area endorsements*. A scallop moratorium permit may contain an area endorsement for Federal waters within Registration Area H and for Federal waters outside Registration Area H.

(A) *Registration Area H*. A scallop moratorium permit may be endorsed for fishing in Federal waters within Registration Area H if a qualifying vessel made a legal landing of scallops taken inside Registration Area H during the qualifying period defined at paragraph (g)(3)(i) of this section.

(B) *Waters outside Registration Area H*. A scallop moratorium permit may be endorsed for fishing in Federal waters outside Registration Area H if the qualifying vessel made a legal landing of scallops taken in waters outside Registration Area H during the qualifying period defined at paragraph (g)(3)(i) of this section.

(iii) *Legal landings*. Evidence of legal landings shall be limited to documentation of state or Federal catch reports that indicate the amount of scallops harvested, the registration area or location in which they were caught, the vessel used to catch them, and the date of harvesting, landing, or reporting.

(4) *Maximum LOA*—(i) All scallop moratorium permits will specify a maximum LOA, which will be 1.2 times the LOA of the qualifying vessel on January 20, 1993, unless the qualifying vessel was under reconstruction on January 20, 1993.

(ii) If a qualifying vessel was under reconstruction on January 20, 1993, the maximum LOA will be the LOA on the date reconstruction was completed.

(5) *Application for permit*. A scallop moratorium permit will be issued to the person or successor in interest who was the owner of a qualifying vessel when

it most recently made qualifying landings under paragraph (g)(3) of this section, if he/she submits to the Regional Administrator a complete scallop moratorium permit application that is subsequently approved. A complete application for a scallop moratorium permit must include the following information:

(i) Name(s), signature(s), business address(es), and telephone and fax numbers of the person(s) who owned the vessel when the most recent qualifying landing of scallops occurred.

(ii) Name of the qualifying vessel, state registration number of the vessel and the USCG number of the vessel, if any.

(iii) Valid documentation of the vessel's basis for moratorium qualification, if requested by the Regional Administrator due to an absence of landings records for the vessel for the qualifying period.

(iv) Reliable documentation of the vessel's qualifying LOA, if requested by the Regional Administrator, such as a vessel survey, builder's plan, state or Federal registration certificate, or other reliable and probative documents that clearly identify the vessel and its LOA, and that are dated on or before January 20, 1993.

(v) Name(s) and signature(s) of the person(s) who is/are the owner(s) of the vessel or the person(s) responsible for representing the vessel owner.

(vi) If the qualifying vessel was under reconstruction on January 20, 1993, the permit application must contain the following additional information:

(A) A legible copy of written contracts or written agreements with the firm that performed reconstruction of the vessel and that relate to that reconstruction.

(B) An affidavit signed by the vessel owner(s) and the owner/manager of the firm that performed the reconstruction specifying the beginning and ending dates of the reconstruction.

(C) An affidavit signed by the vessel owner(s) specifying the LOA of the reconstructed vessel.

(6) *Vessel ownership*. Evidence of vessel ownership shall be limited to the following documents, in order of priority:

(i) For vessels required to be documented under the laws of the United States, the USCG abstract of title issued in respect to that vessel.

(ii) A certificate of registration that is determinative as to vessel ownership.

(iii) A bill of sale.

(7) *Permit transfer*. A complete application for approval of transfer of a scallop moratorium permit must include the following information:

(i) Name(s), business address(es), and telephone and fax numbers of the applicant(s) including the holders of the scallop moratorium permit that is to be transferred and the person who is to receive the transferred scallop moratorium permit.

(ii) Name(s) and signature(s) of the person(s) from whom moratorium qualification would be transferred or their representative, and the person(s) who would receive the transferred moratorium qualification or their representative.

(iii) A legible copy of a contract or agreement to transfer the moratorium permit in question must be included with the application for transfer that specifies the person(s) from whom the scallop moratorium permit is to be transferred, the date of the transfer agreement, name(s) and signature(s) of the current holder(s) of the permit, and name(s) and signature(s) of person(s) to whom the scallop moratorium permit is to be transferred.

(8) *Appeal*—(i) *Determination*. The Chief, RAM Division, will issue an initial administrative determination to an applicant upon denial of a scallop moratorium permit by that official. An initial administrative determination may be appealed by the applicant in accordance with § 679.43. The initial administrative determination will be the final agency action if a written appeal is not received by the Regional Administrator postmarked within the period specified at § 679.43.

(ii) *Permit denial*. An initial administrative determination that denies an application for a scallop moratorium permit may authorize the affected person to take or retain scallops. The authorization expires on the effective date of the final agency action relating to the application.

(iii) *Final action*. An administrative determination denying the issuance of a scallop moratorium permit is the final agency action for purposes of judicial review.

4. In § 679.43, paragraph (a) is revised to read as follows:

§ 679.43 Determinations and appeals.

(a) *General*. This section describes the procedure for appealing initial administrative determinations made under this subpart as well as § 679.4(c), § 679.4(g) and portions of subpart C of this part that apply to the halibut and sablefish CDQ program.

* * * * *

[FR Doc. 96–32751 Filed 12–20–96; 12:43 pm]

BILLING CODE 3510–22–F

Notices

Federal Register
Vol. 61, No. 249
Thursday, December 26, 1996

This section of the FEDERAL REGISTER contains documents other than rules or proposed rules that are applicable to the public. Notices of hearings and investigations, committee meetings, agency decisions and rulings, delegations of authority, filing of petitions and applications and agency statements of organization and functions are examples of documents appearing in this section.

DEPARTMENT OF AGRICULTURE

Agricultural Marketing Service

[Docket No. FV96–944–2, FV96–980–1, FV96–999–3]

AGENCY: Agricultural Marketing Service, USDA.

ACTION: Proposed collection; comments requested.

SUMMARY: In accordance with the Paperwork Reduction Act of 1995 (44 U.S.C. Chapter 35), this notice announces the Agricultural Marketing Service's (AMS) intention to request an extension for a currently approved information collection for specified exempt import commodities.

DATES: Comments on this notice must be received by February 24, 1997 to be assured of consideration.

ADDRESSES: Interested persons are invited to submit written comments concerning this proposal. Comments must be sent in triplicate to the Docket Clerk, USDA, AMS, Fruit and Vegetable Division, Marketing Order Administration Branch, P.O. Box 96456, Room 2525–S, Washington, D.C. 20090–6456; or, FAX: (202) 720–5698. All comments should reference the docket number, the date, and page number of this issue of the Federal Register. Comments will be made available for public inspection in the Office of the Docket Clerk during regular business hours.

FOR ADDITIONAL INFORMATION CONTACT: Shoshana Avrishon, USDA, AMS, Marketing Order Administration Branch, Fruit and Vegetable Division, P.O. Box 96456, Room 2525–S, Washington, DC 20090–6456; telephone: 202–720–6467.

SUPPLEMENTARY INFORMATION:

Title: Specified Commodities Imported into the United States Exempt from Import Requirements.

OMB Number: 0581–0167.

Expiration Date of Approval: March 31, 1997.

Type of Request: Extension of currently approved information collection.

Abstract: Section 8e of the Agricultural Marketing Agreement Act of 1937, As Amended; 7 U.S.C. 601–674 (Act) requires that whenever the Secretary of Agriculture issues grade, size, quality, or maturity regulations under domestic marketing orders for certain commodities, the same or comparable regulations on imports of those commodities must be issued. Import regulations apply only during those periods when domestic marketing order regulations are in effect. Currently, the following commodities are subject to Section 8e import regulations: avocados, dates (other than dates for processing), filberts, grapefruit, table grapes, kiwifruit, limes, olives (other than Spanish-style olives), onions, oranges, Irish potatoes, prunes, raisins, tomatoes, and walnuts. However, imports of these commodities are exempt from such requirements if they are imported for such outlets as processing, charity, animal feed, seed, and distribution to relief agencies, when those outlets are exempt under the applicable marketing order.

Safeguard procedures in the form of importer and receiver reporting requirements are used to ensure that the imported commodity is provided to authorized exempt outlets. The safeguard procedures are similar to the reports currently required by most domestic marketing orders. The import regulations require importers and receivers of imported fruit, vegetable, and specialty crops to submit a form, as provided in sections 944.350, 980.501, and 999.500.

An importer wishing to import commodities for exempt purposes must complete, in triplicate, prior to importation, an Importer's Exempt Commodity Form (FV–6). Copy one is presented to the U.S. Customs Service. The importer files copy two with the Marketing Order Administration Branch (MOAB) of the Fruit and Vegetable Division, AMS, within two days after the commodity enters the United States. The third copy of the form accompanies the exempt shipment to its intended destination. The receiver certifies that the commodity has been received and that it will be utilized for authorized exempt purposes. The receiver then files copy three with MOAB, within two days after receiving the commodity.

The Department of Agriculture (Department) utilizes this information to ensure that imported goods destined for exempt outlets are given no less favorable treatment than that afforded to domestic goods destined for such exempt outlets. These exemptions are consistent with Section 8e import regulations under the Act.

This form requires the minimum amount of information necessary to effectively carry out the requirements of the orders, and its use is necessary to fulfill the intent of the Act as expressed in the orders, and to administer Section 8e compliance activities.

The information collected is used primarily by authorized representatives of the Department, including AMS, Fruit and Vegetable Division regional and headquarters staff. AMS is the primary user of the information.

Estimate of Burden: Public reporting burden for this collection of information is estimated to average 10 minutes per response.

Respondents: Importers and receivers of exempt commodities.

Estimated Number of Respondents: 714.

Estimated Number of Responses per Respondent: 3.

Estimated Total Annual Burden on Respondents: 119 hours.

Comments are invited on: (1) whether the proposed collection of information is necessary for the proper performance of the functions of the agency, including whether the information will have practical utility; (2) the accuracy of the agency's estimate of the burden of the proposed collection of information including the validity of methodology and assumptions used; (3) ways to enhance the quality, utility, and clarity of the information to be collected; and, (4) ways to minimize the burden of the collection of information on those who respond, including use of automated, electronic, mechanical, or other technologies.

All responses to this notice will be summarized and included in the request for OMB approval. All comments will become a matter of public record.

Dated: December 17, 1996.

Robert C. Keeney,

Director, Fruit and Vegetable Division.

[FR Doc. 96–32852 Filed 12–24–96; 8:45 am]

BILLING CODE 3410–02–P

Forest Service

Red Mountain Project—Twin, Muddy Creek, and Gee Timber Sales, Wallowa-Whitman National Forest, Baker County, Oregon

AGENCY: Forest Service, USDA.

ACTION: Cancellation of a notice of intent to prepare an environmental impact statement.

SUMMARY: On December 17, 1990, a notice of intent to prepare an environmental impact statement (EIS) for the Red Mountain Project, on the Baker District of the Wallowa-Whitman National Forest, was published in the Federal Register (55 FR 51739). A notice of availability for the draft EIS for the Red Mountain Project was published in the Federal Register on March 8, 1996 (61 FR 9450). USDA, Forest Service, has decided to cancel the preparation of a final EIS analyzing timber sale proposals and related activities within an unloaded portion of the east face of Elkhorn Ridge. The notice of intent is hereby rescinded.

FOR FURTHER INFORMATION: Questions may be addressed to Joanne Britton, Environmental Coordinator, Baker Ranger District, 3165 10th Street, Baker City, Oregon, 97814, telephone: 541–523–4476.

Dated: December 10, 1996.

R.M. Richmond,

Forest Supervisor.

[FR Doc. 96–32714 Filed 12–24–96; 8:45 am]

BILLING CODE 3410–11–M

Olympic Provincial Interagency Executive Committee (PIEC), Advisory Committee

AGENCY: Forest Service, USDA.

ACTION: Notice of meeting.

SUMMARY: The Olympic PIEC Advisory Committee will meet on January 24, 1997 at the Jamestown S'Klallam Tribal Community Center, 1033 Old Blyn Highway, Sequim, Washington. The meeting will begin at 9:30 a.m. and continue until 3:00 p.m. Agenda topics to be covered include: (1) Review of Field Trip; (2) Quilcene District Overview of Watershed Analysis, Projects, Access & Travel Management Updates; (3) Second half of FY97 Priorities for Restoration Projects; (4) Regional Ecosystem Office: role and relation to PACs; (5) Adaptive Management Area planning and strategies; (6) Open Forum; and (7) Public Comments. All Olympic Province Advisory Committee meetings are open to the public. Interested citizens are encouraged to attend.

FOR FURTHER INFORMATION CONTACT: Direct questions regarding this meeting to Kate Snow, Province Liaison, USDA, Quilcene Ranger District, P.O. Box 280, Quilcene, WA 98376, (360) 765–2211 or Ronald R. Humphrey, Forest Supervisor, at (360) 956–2301.

Dated: December 18, 1996.

Ronald R. Humphrey,

Forest Supervisor.

[FR Doc. 96–32848 Filed 12–24–96; 8:45 am]

BILLING CODE 3410–11–M

DEPARTMENT OF COMMERCE

National Oceanic and Atmospheric Administration

[I.D. 121996A]

Small Takes of Ringed Seals Incidental to On-Ice Seismic Activity

AGENCY: National Marine Fisheries Service (NMFS), National Oceanic and Atmospheric Administration (NOAA), Commerce.

ACTION: Notice of issuance of letters of authorization.

SUMMARY: In accordance with the Marine Mammal Protection Act (MMPA) as amended, and implementing regulations, notification is hereby given that letters of authorization to take ringed seals incidental to on-ice seismic operations in the Beaufort Sea off Alaska were issued on December 19, 1996, to BP Exploration, Western Geophysical, and Northern Geophysical of America, all of Anchorage, AK.

EFFECTIVE DATE: These letters of authorization are effective from January 1, 1997, through May 31, 1997.

ADDRESSES: The applications and letters are available for review in the following offices: Office of Protected Resources, NMFS, 1315 East-West Highway, Silver Spring, MD 20910 and Western Alaska Field Office, NMFS, 701 C Street, Anchorage, AK 99513.

FOR FURTHER INFORMATION CONTACT: Kenneth R. Hollingshead, Office of Protected Resources, NMFS, (301) 713–2055 or Ron Morris, Western Alaska Field Office, NMFS, (907) 271–5006.

SUPPLEMENTARY INFORMATION: Section 101(a)(5)(A) of the MMPA (16 U.S.C. 1361 *et seq.*) directs NMFS to allow, on request, the incidental, but not intentional, taking of small numbers of marine mammals by U.S. citizens who engage in a specified activity (other than commercial fishing) within a specified geographical region, if certain findings are made and regulations are issued. Under the MMPA, the term ''taking'' means to harass, hunt, capture or kill or to attempt to harass, hunt, capture or kill marine mammals.

Permission may be granted for periods up to 5 years if the Secretary of Commerce finds, after notification and opportunity for public comment, that the taking will have a negligible impact on the species or stock(s) of marine mammals and will not have an unmitigable adverse impact on the availability of the species or stock(s) for subsistence uses. In addition, NMFS must prescribe regulations that include permissible methods of taking and other means effecting the least practicable adverse impact on the species and its habitat and on the availability of the species for subsistence uses, paying particular attention to rookeries, mating grounds and areas of similar significance. The regulations must include requirements pertaining to the monitoring and reporting of such taking. Regulations governing the taking of ringed seals incidental to on-ice seismic activities were published on January 13, 1993 (58 FR 4091), and remain in effect until December 31, 1997.

Summary of Requests

NMFS received requests for letters of authorization on the dates specified from (1) Northern Geophysical of America, 2361 Cinnabar Loop, Anchorage, AK 99507 (September 10, 1996), (2) Western Geophysical Inc. 351 E. International Airport Road, Anchorage, AK 99518–1299 (September 18, 1996), and (3) BP Exploration (Alaska) Inc., 900 East Benson Blvd. P.O. Box 196612, Anchorage, AK 99519–6612 (October 7, 1996). All letters request a take by harassment of a small number of ringed seals incidental to on-ice seismic work in the Beaufort Sea, AK.

Issuance of these letters of authorization is based on findings that the total takings will have a negligible impact on the ringed seal species or stock and will not have an unmitigable adverse impact on the availability of this species for subsistence uses.

Dated: December 19, 1996.

Patricia Montanio,

Acting Director, Office of Protected Resources, National Marine Fisheries Service.

[FR Doc. 96–32775 Filed 12–24–96; 8:45 am]

BILLING CODE 3510–22–F

[I.D. 121796A]

Marine Mammals; Scientific Research Permit No. 1021 (P532C)

AGENCY: National Marine Fisheries Service (NMFS), National Oceanic and Atmospheric Administration (NOAA), Commerce.

ACTION: Issuance of permit.

SUMMARY: Notice is hereby given that Texas A&M University at Galveston, P.O. Box 1675, Galveston, TX 77551 (Principal Investigator: Dr. Randall W. Davis, Co-investigators: Dr. William E. Evans, Dr. Robert Benson, Dr. Bernd Würsig, Mr. Troy S. Sparks and Mr. Spencer Lynn), has been issued a permit to tag, biopsy dart, capture/release various cetacean species for purposes of scientific research. The NMFS decision on project 1 involving low frequency sounds on sperm whales was deferred pending an environmental review.

ADDRESSES: The permit and related documents are available for review upon written request or by appointment in the following office(s):

Permits Division, Office of Protected Resources, NMFS, 1315 East-West Highway, Room 13130, Silver Spring, MD 20910 (301/713–2289); and

Regional Administrator, Southeast Region, NMFS, 9721 Executive Center Drive North, St. Petersburg, FL 33702–2532.

SUPPLEMENTARY INFORMATION: On August 26, 1996, notice was published in the Federal Register (61 FR 43737) that a request for a scientific research permit to take various cetacean species had been submitted by the above-named organization. The requested permit has been issued under the authority of the Marine Mammal Protection Act of 1972, as amended (16 U.S.C. 1361 *et seq.*), the Regulations Governing the Taking and Importing of Marine Mammals (50 CFR part 216), the Endangered Species Act of 1973, as amended (ESA; 16 U.S.C. 1531 *et seq.*), and the regulations governing the taking, importing, and exporting of endangered fish and wildlife (50 CFR 222.25).

Issuance of this permit as required by the ESA was based on a finding that such permit: (1) Was applied for in good faith; (2) will not operate to the disadvantage of the endangered species which is the subject of this permit; and (3) is consistent with the purposes and policies set forth in section 2 of the ESA.

Dated: December 17, 1996.

Ann D. Terbush,

Chief, Permits and Documentation Division, Office of Protected Resources, National Marine Fisheries Service.

[FR Doc. 96–32753 Filed 12–24–96; 8:45 am]

BILLING CODE 3510–22–F

COMMODITY FUTURES TRADING COMMISSION

Chicago Board of Trade Futures Contracts in Corn and Soybeans; Notice That Delivery Point Specifications Must Be Amended

AGENCY: Commodity Futures Trading Commission.

ACTION: Notice of, and request for public comment on, Notification to chicago board of trade to amend delivery specifications.

SUMMARY: The Commodity Futures Trading Commission (''Commission'') has notified the Board of Trade of the City of Chicago (''CBT''), under Section 5a(a)(10) of the Commodity Exchange Act (''Act''), 7 U.S.C. 7a(a)(10), that the delivery terms of the CBT corn and soybean futures contracts no longer accomplish the objectives of that section of the Act; and that the CBT has seventy-five days from the date of this notice to submit proposed amendments to those contracts which will accomplish the objectives of that section.

The Commission has determined that publication of the notification to the CBT for public comment is in the public interest, will assist the Commission in considering the views of interested persons, and is consistent with the purposes of the Commodity Exchange Act.

DATES: Comments must be received by February 24, 1997.

ADDRESSES: Comments should be mailed to the Commodity Futures Trading Commission, Three Lafayette Centre, 1155 21st Street, N.W., Washington, D.C. 20581, attention: Office of the Secretariat; transmitted by facsimile at (202) 418–5521; or transmitted electronically at [secretary@cftc.gov]. Reference should be made to ''Corn and Soybean Delivery Points.''

FOR FURTHER INFORMATION CONTACT: Blake Imel, Acting Director, or Paul M. Architzel, Chief Counsel, Division of Economic Analysis, Commodity Futures Trading Commission, Three Lafayette Centre, 1155 21st Street, N.W., Washington, D.C. 20581, (202) 418–5260, or electronically, Mr. Architzel at [PArchitzel@cftc.gov].

SUPPLEMENTARY INFORMATION: Section 5a(a)(10) of the Act provides that as a condition of contract market designation, boards of trade are required to:

> permit the delivery of any commodity, on contracts of sale thereof for future delivery, of such grade or grades, at such point or points and at such quality and locational price differentials as will tend to prevent or diminish price manipulation, market congestion, or the abnormal movement of such commodity in interstate commerce. If the Commission after investigation finds that the rules and regulations adopted by a contract market permitting delivery of any commodity on contracts of sale thereof for future delivery, do not accomplish the objectives of this subsection, then the Commission shall notify the contract market of its finding and afford the contract market an opportunity to make appropriate changes in such rules and regulations.

The Commission, by letter dated December 19, 1996, notified the CBT under Section 5a(a)(10) of the Act, that its futures contracts for corn and soybeans no longer were in compliance with the requirements of that section of the Act. The text of that notification is set-forth below.

December 19, 1996.

Patrick Arbor

Chairman, Chicago Board of Trade, 141 W. Jackson Blvd., Chicago, Illinois 60604

Re: Delivery Point Specifications of the Corn and Soybean Futures Contracts.

Dear Chairman Arbor: The Commodity Futures Trading Commission (''CFTC'' or ''Commission'') hereby notifies the Board of Trade of the City of Chicago (''CBT or Exchange'') under Section 5a(a)(10) of the Commodity Exchange Act (''Act''), 7 U.S.C. 7a(a)(10), that the delivery terms of the CBT corn and soybean futures contracts no longer accomplish the statutory objectives of ''permit[ting] the delivery of any commodity * * * at such point or points and at such quality and locational price differentials as will tend to prevent or diminish price manipulation, market congestion, or the abnormal movement of such commodity in interstate commerce.'' [1]

The Commission, as detailed below, bases this finding on the following: (1) the continuing diminution of the role of terminal markets in the cash market for grain; (2) the increasing shift of the locus of the main channels of commodity flows away from the delivery points on the contracts, particularly the par-delivery point of Chicago; (3) the continuing decline in cash market activity generally at the contracts' delivery points, particularly Chicago; and (4) the serious, precipitous drop in regular warehouse storage capacity at the Chicago delivery point

[1] The full text of Section 5a(a)(10) of the Commodity Exchange Act is appended to this letter.

over the past fourteen months. These conclusions are supported by a number of CFTC staff inquiries into these issues and by four separate, comprehensive studies of these issues completed in 1991 (one of which was sponsored by the CBT). Each of these inquiries and studies identified the above trends and indicated that deliverable supplies on the subject contracts were not available in normal cash market channels in amounts sufficient to tend to prevent or to diminish price manipulation, market congestion, or the abnormal movement of such commodity in interstate commerce.

Although the CBT has attempted previously to respond to these problems by amending the contracts, those steps, such as the addition of St. Louis as a delivery point, have proven to be ineffective. With the recent precipitous drop in warehouse capacity in Chicago, the problem has reached a critical juncture. Recognizing this, the CBT convened a Task Force to consider changes to the grain contracts. More than a year after the Task Force began its deliberations, the Exchange membership rejected the modifications to the terms of the corn and soybean contracts recommended by the CBT's Board of Directors.

And, as provided under section 5a(a)(10) of the Act, the Commission hereby notifies the CBT that the Exchange is afforded the opportunity to submit for Commission approval proposed amendments to the delivery terms of the corn and soybean futures contracts that will accomplish the statutory objectives by March 4, 1997, a period of seventy-five days from the date of this letter. In determining whether its proposal is adequate to accomplish the objectives of section 5a(a)(10) of the Act, the CBT should be guided by a number of illustrative alternatives provided below. Failure to respond in a manner which in the Commission's judgment is ''necessary to accomplish the objectives'' of this section of the Act will result in further proceedings under section 5a(a)(10).

In light of the Commission's determination that the CBT's futures contracts in corn and soybeans no longer comply with the requirements of section 5a(a)(10) of the Act, the CBT should refrain from listing additional months for trading in those contracts during the pendency of these proceedings.

By limiting this notification under Section 5a(a)(10) of the Act to the CBT's futures contracts for corn and soybeans, the Commission is not thereby making any determination regarding any other CBT futures contract. The Commission notes, however, that the delivery specifications for the CBT wheat futures contract are also subject to many of the same trends which have affected adversely the corn and soybean contracts. In light of the importance of these issues, the Commission determined to limit this Section 5a(a)(10) notification to the corn and soybean contracts, which have been fully considered by the CBT in the first instance. The Commission believes that such a full consideration by the CBT of the delivery specifications of its wheat contract is also warranted and should be undertaken immediately. The Commission is of the view that this reconsideration should be completed within 120 days.

In notifying the CBT of the Commission's finding that the terms of the corn and soybean futures contracts do not accomplish the objectives of Section 5a(a)(10) of the Act, the Commission is not questioning the continued utility of the contracts for hedging or price basing under ordinary conditions or their role as the world's premiere futures contracts for corn and soybeans. Rather, the Commission's action, as explained in greater detail below, is predicated upon its finding that bringing the delivery terms of the contracts into closer alignment with an otherwise broad and active cash market is necessary to meet the requirements of Section 5a(a)(10), tending to prevent or to diminish price manipulation, market congestion, or the abnormal movement of such commodities in interstate commerce.

I. Background.

The CBT's corn and soybean futures contracts are major United States (U.S.) futures markets and principal vehicles for hedging and pricing by U.S. firms with commercial interests in these two important agricultural commodities. They rank among the most actively traded commodity futures contracts in the world and are used extensively by foreign commercial interests. In this regard, for the 1995/96 crop year, the average daily open interest was nearly two billion bushels for CBT corn futures and approached one billion bushels for CBT soybean futures. The total trading volume over the same period was approximately 95 billion bushels for corn futures and 70 billion bushels for soybean futures.

These activity levels for corn represent a greater than eight-fold increase in the levels of volume and open interest experienced in these markets in the early 1970s. For soybeans, these current levels are more than four times the levels experienced in the early 1970s. This increased overall level of trading activity can be attributed to an approximate 80 percent increase in the combined U.S. annual production of corn and soybeans over the last 25 years; a steadily decreasing level of federal crop price support activities, which has led to increased commercial uncertainty and need for hedging; and an increased internationalization of cash markets for feed grains and soybeans, which has also led to increased foreign participation in these futures markets for purposes of hedging and price-basing.

The preponderant use of these markets is commercial in nature. For example, in mid-November of this year, reportable commercial traders held 60 and 70 percent of the reportable long and short sides, respectively, of the soybean futures market and 85 and 64 percent of the reportable long and short sides, respectively, of the corn market.[2] Presumably, commercial traders also held a substantial proportion of the non-reportable positions.

The predominant economic function of the CBT corn and soybean futures markets is risk-transfer and price-basing, rather than merchandising or title transfer for the underlying commodity. Consistent with this, the preponderance of positions established in these markets are liquidated through the purchase or sale of offsetting futures contracts, rather than through making or taking delivery of the commodity. Nonetheless, the orderly convergence of futures prices and cash market merchandising values is essential to these contracts' risk-transfer and price-basing functions, and this convergence is dependent on the unimpeded opportunity of market participants to conduct arbitrage between the cash and futures markets. As a result, it is essential that the delivery specifications of these contracts effectively link futures trading to a substantial segment of the underlying cash markets.

The manner in which cash and futures prices are linked through the delivery mechanism is straightforward. If, at contract expiration, short position holders believe that expiring futures prices are higher than the current value of the commodity, they can satisfy their contractual obligations by acquisition and delivery of the physical commodity, rather than through the purchase of offsetting futures contracts. Likewise, if long position holders believe that

[2] Reportable traders are individuals or firms that hold futures positions of 500,000 bushels or more in soybeans or 750,000 bushels or more in corn in any one contract month through any U.S. or foreign broker.

expiring futures prices are lower than the current merchandising value of the commodity, they can require delivery in lieu of selling offsetting contracts in the futures market. To the extent that this arbitrage process is not impeded, convergence of cash and futures prices at contract expiration is assured.

The terms of delivery are critical in determining the degree of arbitrage between cash and futures markets and the strength of the linkage between cash and futures prices. When contract delivery terms do not correspond to a substantial segment of the cash market, the strength of the arbitrage linkage is diminished. In particular, when the futures market requires delivery at a location or of grades for which the commodity is not sufficiently available, short position holders may not be able to acquire the commodity or gain access to the delivery facilities in the event they believe that cash and futures prices are misaligned. Long position holders, seeking to profit from their positions, have no incentive to liquidate their positions through offset, and futures prices may take a course that is independent of the cash market. The resulting market congestion, or distortion of prices, is disruptive to proper functioning of the futures market, because prices no longer reflect cash market fundamentals. Thus, the nature of the delivery terms is critical to use of the CBT's corn and soybean futures contracts throughout the U.S. and abroad in the hedging and pricing of corn and soybean transactions and directly determines the degree to which the prices of the futures markets may be manipulated or otherwise become independent of fundamental conditions in those cash markets.

As discussed in detail below, the CBT's corn and soybean contracts currently specify delivery through the use of warehouse receipts for stocks held in specified facilities at Chicago, Toledo, and St. Louis. It is the location of these delivery points, as well as the nature of the delivery instrument, that is the subject of the Commission's analysis regarding the CBT's compliance with the provisions of Section 5a(a)(10) of the Act.

II. General Cash Market Trends

Chicago and Toledo, the primary delivery points of the CBT's corn and soybean futures contracts, are now situated at the periphery of current major cash market channels for these commodities. Their declining importance as cash market centers is the result of long-term trends in the storage, transportation, and processing of grains. As discussed below, these trends include: (1) increasing shipment of corn and soybeans from production areas directly to domestic users or export locations, bypassing intermediate locations such as terminal markets; (2) increasing processor use of corn and soybeans in production areas, to produce food, feed, and other products, thereby reducing the relative quantity of corn and soybeans shipped to locations outside of production areas including terminal markets; (3) substantially declining export activity from the Great Lakes relative to the growth of exports from Gulf of Mexico and Pacific Northwest ports; and (4) increasing decentralization in grain storage capacity, with marked increases in both on-farm and commercial storage capacity in production areas.

1. Changes in Transportation Patterns

The increasing shipment of corn and soybeans directly from production areas to domestic users or export locations, bypassing the traditional terminal markets, is related, in large part, to the deregulation of railroad freight rates. Prior to rail freight-rate deregulation in 1980, a practice called ''transit'' or

''proportional billing'' permitted grain to be shipped from production areas to an intermediate point for storage, such as a traditional terminal market, and then to the final destination at a single, fixed rate. After 1980, negotiated point-to-point rates replaced transit billing, favoring direct shipments of corn and soybeans to domestic users or export locations, to the detriment of traditional terminal markets located at major railroad centers such as Chicago.

2. Processing Trends

Substantial increases in corn and soybean processing at new and existing locations within the major production areas has further reduced the role of traditional terminal markets. According to U. S. Department of Agriculture (USDA) data, the quantity of corn processed into corn sweeteners, ethanol, and other products quadrupled between 1970 and 1995 (from about 400 million bushels to over 1.6 billion bushels) and the quantity of soybeans crushed in the U.S. approximately doubled over the same time period (from about 760 million bushels to about 1.34 billion bushels). Most of these new or expanded facilities are located in production areas, in which the processors obtain their supplies of corn and soybeans directly from nearby grain warehouses or producers. Moreover, even processing facilities located at terminal markets now purchase the majority of their supply directly from lower-cost production-area locations rather than from terminal market elevators. The inability to participate in this growth sector of the cash market has further eroded the relative importance of traditional terminal-market elevators.

3. Export Marketing Channel Changes

Over the past 25 years, corn and soybean exports have grown dramatically. However, the trends favor the all-year export facilities of the lower Mississippi River. In addition, the growth in exports to Asia has favored export facilities at Pacific Northwest ports. The growth in exports from these two areas has relatively disadvantaged the third major export route—the Great Lakes. More fundamentally, corn and soybean exports from the Great Lakes have declined absolutely, as well. This decline is, in part, attributable to the fall in exports to Northern European countries where Great Lakes ports sometimes have a cost advantage relative to other U.S. ports. In addition, exports from the Great Lakes are limited by the relatively high cost of shipping corn and soybeans by vessel from Great Lakes ports. This is partially due to the fact that the St. Lawrence Seaway, through which all vessels from Great Lakes ports must pass, can accommodate only relatively small vessels, which tend to charge higher freight rates for grain shipments than those assessed by larger vessels. In view of this consideration, corn and soybeans frequently are transferred from such smaller ships to larger vessels at Canadian ports.

These changes have significantly eroded the role, and general business activity, of the Great Lakes ports and the traditional terminal markets located there. For example, USDA data indicate that average annual exports of corn from Chicago and Toledo combined fell by 33 percent between 1968–70 and 1993–95. Average annual soybean exports from Toledo and Chicago over this same period fell by 53 percent. In addition, the percentage of total U.S. exports of corn and soybeans accounted for by Chicago and Toledo combined declined from an average of about 17 percent in the 1968–70 period to an average of about four percent in the 1993–95 period.

As the following charts indicate, the decline in the export role of Chicago and Toledo has been associated with, and is in contrast to, the increasing importance of corn and soybean exports through ports on the Gulf of Mexico and on the Pacific Coast.[3]

BILLING CODE 6351–01–P

[3] Ports located on the lower Mississippi River accounted for about 93 percent of average annual soybean and corn exports from Gulf of Mexico ports over the period 1993–95. Virtually all Pacific Coast exports of corn and soybeans move through Pacific Northwest ports located on the Columbia River and Puget Sound.

Chart 1. Percentage Distribution of Average Annual U.S. Corn Exports Among Port Areas, 1968-70 and 1993-95

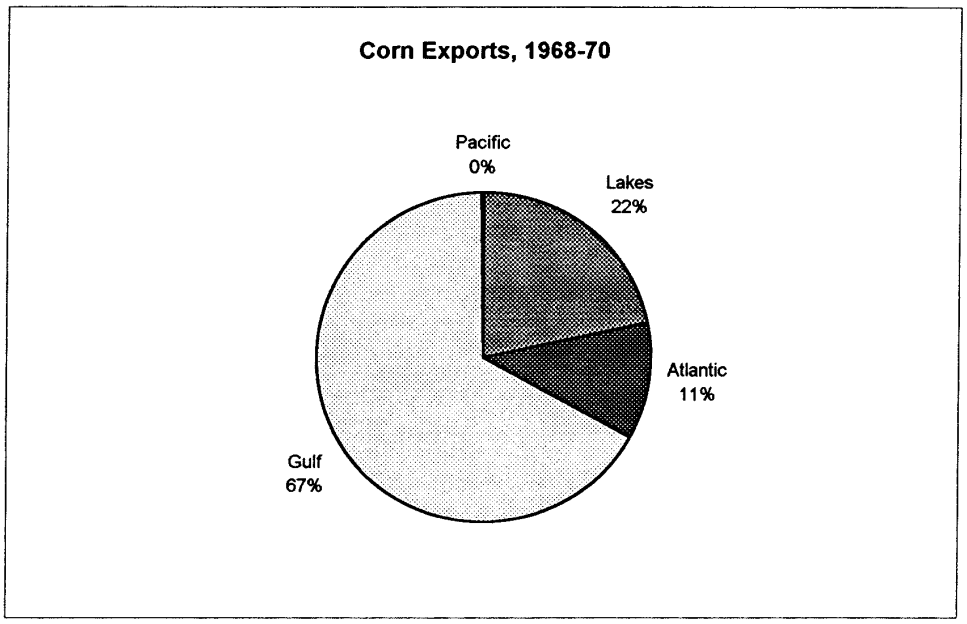

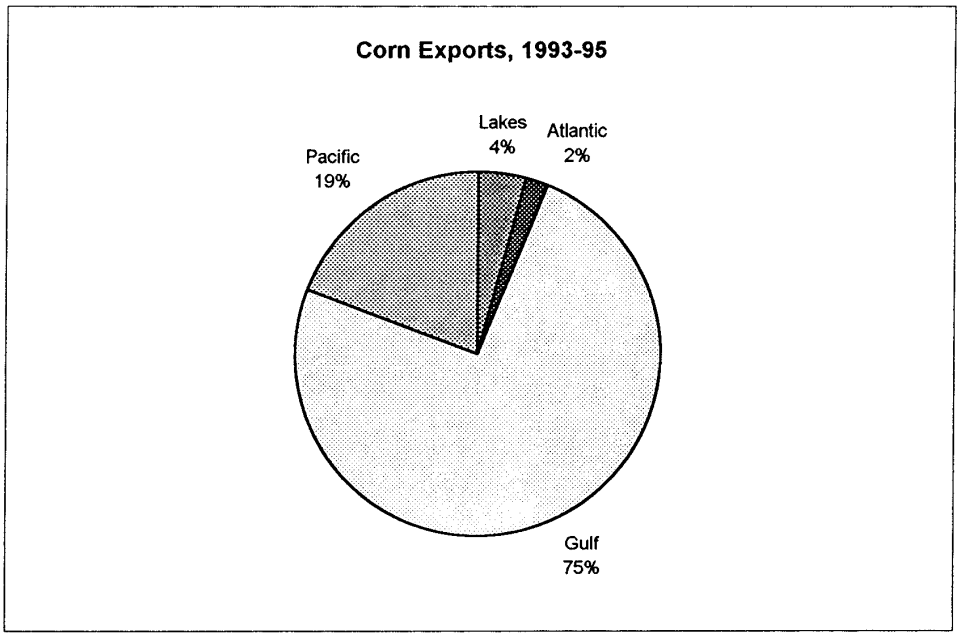

Sources: Federal Grain Inspection Service and CBT Annual Reports

Chart 2. Percentage Distribution of Average Annual U.S. Soybean Exports Among Port Areas, 1968-70 and 1993-95.

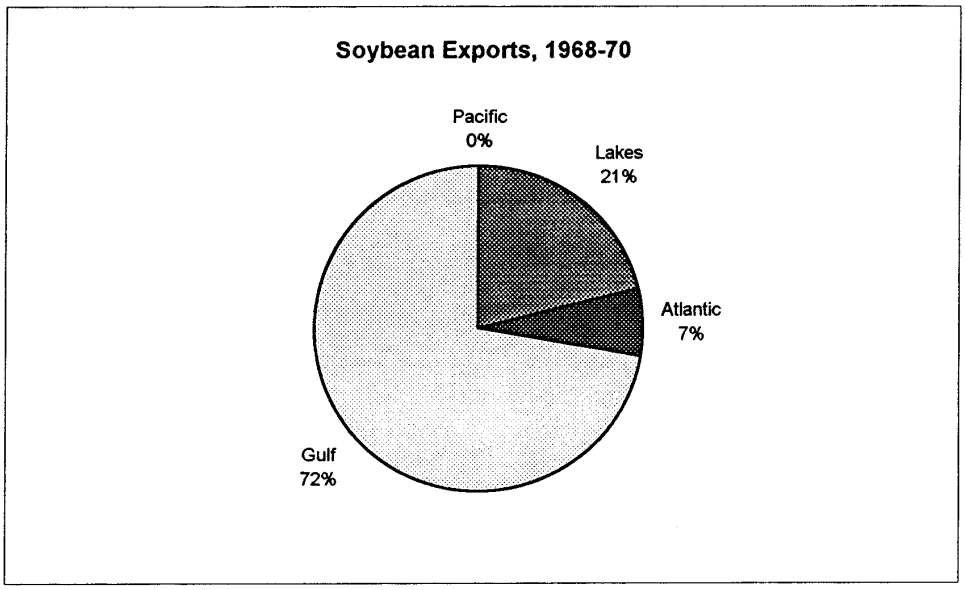

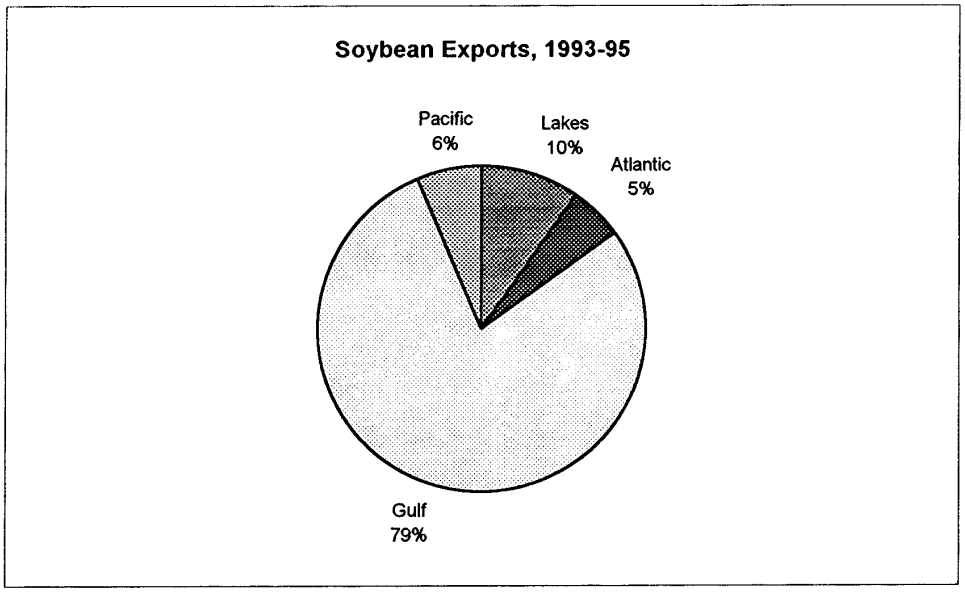

Sources: Federal Grain Inspection Service, CBT Annual Reports

BILLING CODE 6351–01–C

4. Geographic Changes in Storage Capacity Location

Finally, the role of some terminal markets as grain storage centers has declined as increasing storage capacity has been constructed in production areas, both off-farm and on-farm. Increases in off-farm storage capacity in production areas is due, in part, to the deregulation of rail freight rates, increased processing activity in production areas, and the need for additional storage capacity due to the significant growth in corn and soybean production in recent decades. In addition, on-farm storage capacity has increased significantly over the past 25 years to allow producers to maintain harvesting efficiency and access to lower cost storage. As a result, the role of terminal markets as storage centers has greatly diminished.

III. Cash Market Conditions at CBT Delivery Points.

As indicated above, general cash market trends disfavor traditional terminal markets such as Chicago. Moreover, cash market activity in Chicago and Toledo, the primary delivery locations for the CBT's corn and soybean futures contracts, has declined substantially, both on an absolute and relative basis, in recent decades. USDA production data and CBT data on grain receipts by elevators and processors at the primary delivery locations indicate that, despite U.S. corn production nearly doubling from 1970 to 1995, total corn receipts at Chicago and Toledo combined increased only by about 26 percent from 1970 to 1995, representing a mere 2.5 percent of total U.S. corn production in 1995. These data also indicate that, while U.S. soybean production also nearly doubled over this period, total soybean receipts in these locations actually fell by about 64 percent during the 1970–95 period, representing less than 2 percent of total 1995 U.S. soybean production. These trends illustrate the peripheral nature of the delivery points of the CBT's corn and soybean futures contracts to the cash market for these commodities.

The decline in the importance of the primary CBT delivery locations relative to the cash market is further illustrated by the trends in storage capacity at these locations in relation to changes in storage capacity in states which contain primary production areas for corn and soybeans. In particular, USDA data indicate that, from January 1, 1970, to December 1, 1995, total off-farm storage capacity in Illinois more than doubled, whereas CBT data for the same period indicate that the registered storage capacity of regular elevators at Chicago remained essentially constant until 1995, when it fell by about 58 percent. Similarly, during the period January 1, 1978, through December 1, 1995, total off-farm storage capacity in Illinois, Indiana and Ohio combined increased by about 42 percent, whereas total regular storage capacity in Chicago and Toledo combined declined by about 15 percent. This decline includes the 25 percent decrease in total regular storage capacity during 1995.

The decline in the cash market importance of the primary CBT delivery points has not been uniform. Rather, the declining cash-market importance of Chicago, the par delivery point, has recently been particularly acute.

1. Cash Market Trends at Chicago

Chicago's decreasing cash market role has been reflected over the years in a gradual loss in regular elevator storage capacity and in the number of firms operating such elevators. As discussed in more detail below, this loss has recently become precipitous. According to CBT data, in 1970, five firms operated seven regular elevators with a total registered storage capacity of about 52.4 million bushels. Currently, there are only three firms operating three regular elevators, with a total registered storage capacity of 22.8 million bushels. Further, one of the three remaining regular elevators, representing about 8.1 million bushels of storage capacity, recently ceased accepting grain and soybeans and appears to be closing down its operations, leaving total registered storage capacity at 14.7 million bushels.

Currently, soybean cash market activity in the Chicago area is limited to the merchandising by regular elevators of soybeans received from production locations, generally at harvest time. In this regard, total annual soybean receipts by regular CBT elevators declined by about 86 percent from 1970 to 1995, to about 8 million bushels. The merchandising role played by CBT regular elevators essentially is limited to shipping soybeans into export channels, either by barge to lower Mississippi River export points or via vessels through the Great Lakes and the St. Lawrence Seaway.

The existing corn cash market in the Chicago area primarily consists of purchases of corn by two local processing facilities and the merchandising by regular elevators of corn received from production locations. Annual receipts of corn in Chicago in 1995 totaled 112 million bushels, remaining relatively unchanged since 1970. CBT data indicate that a very small share of these receipts is received by regular elevators, with these elevators accounting for only about 14 percent of total corn receipts in 1995. Further, corn processing facilities in Chicago purchase essentially all of their annual corn requirements directly from production areas rather than from regular elevators. As with soybeans, regular elevators merchandise the limited quantities of corn they receive primarily into export channels.

USDA data indicate that average corn exports via the Great Lakes, during the period 1993–95, declined in absolute terms by over 60 percent relative to the average levels observed in 1968–70 and, as a percentage of total U.S. exports, from about 11.3 to 1.2 percent.[4] These data also indicate that average soybean exports via the Great Lakes declined by approximately 70 percent between these same two time periods and, as a percentage of total U.S. exports, from about 7.3 to about 1.1 percent.

2. Cash Market at Toledo

Corn and soybean cash market activity in Toledo has been less affected by these trends than the par delivery point of Chicago. Since Toledo was added as a delivery point for corn and soybeans in the mid- to late 1970s, the number of regular elevators in Toledo has remained relatively stable, although overall registered storage capacity has increased from about 36 million bushels in 1978 to about 57 million bushels today. Currently, there are seven regular elevators at the Toledo delivery point. The cash market for corn and soybeans at Toledo consists exclusively of the merchandising activities of the regular elevators; there are no processing facilities for these commodities at this location.

From 1970 to 1995, annual receipts of corn at Toledo doubled, increasing to an average of about 65 million bushels during 1994–95. Despite the overall doubling of receipts, however, average corn exports via the Great Lakes, during the period 1993–95, exceeded by only about 20 percent the average levels observed in 1968–70. In contrast, soybean receipts at Toledo declined in absolute amount by about 30 percent over this same period to an average of about 30 million bushels during 1994–95. Average soybean exports from Toledo declined by an even greater amount—approximately 47 percent between these same two time periods. Thus, while these data indicate that

[4] These data actually overstate the level of corn and soybean exports from Chicago, because the USDA's export data for Chicago also include exports from Milwaukee.

Toledo, unlike Chicago, has retained a larger measure of cash market activity, it is of a decidedly mixed nature.

3. Cash Market Conditions at St. Louis

Cash market activity at the contracts' St. Louis delivery point is of a substantially different nature than at the contracts' two primary delivery points. This location primarily serves as a barge loading area for corn and soybeans for shipment to the lower Mississippi River export market. The four regular elevators currently at St. Louis have a registered storage capacity of 12.2 million bushels. CBT data indicate that these elevators handle relatively large quantities of corn and soybeans. Specifically, receipts of corn averaged 52 million bushels during the period 1994–95, while receipts of soybeans averaged 23 million bushels over this same period. Similar quantities of corn and soybeans were shipped (almost exclusively by barge) during these two years. However, regular elevators at this location do not store significant quantities of corn or soybeans for extended periods of time due to the need to keep storage space unencumbered in order efficiently to conduct the unloading/loading process. Accordingly, because delivery on the CBT's corn and soybean contracts calls for the issuance of warehouse receipts that require regular elevators to store the commodity until the receipt is redeemed, there have been only a token number of futures deliveries at St. Louis.

IV. History of Revisions to the CBT Corn and Soybean Futures Delivery Point Specifications—1973 to 1993

The trends discussed above are long-term in nature. There has been an equally long history of modest attempts, made only in response to the urging of the federal regulator, to address the effect of these trends on the continued viability of the delivery terms of these futures contracts, while retaining the primacy of Chicago. Until the 1970's, Chicago was the sole delivery point on the CBT's corn and soybean futures contracts. At that time, a number of problem liquidations and price manipulation investigations in these futures markets focused attention on the inadequacy of Chicago as a delivery point and the need for additional delivery points. In particular, in the summer of 1973, both futures markets experienced problem liquidations, due, in part, to a general tightness in supplies associated with large Soviet grain purchases. Later that year, Congressional hearings were held in response to these problems. Ultimately, as part of far-reaching amendments to the Act, Section 5a(a)(10) was added, providing for new federal authority to address directly the delivery point provisions of futures contracts.

1. Proposals to Add Toledo and St. Louis

In 1974, the CBT submitted proposals to the USDA's Commodity Exchange Authority, the Commission's predecessor agency, to add Toledo and St. Louis as delivery points on the corn and soybean contracts at a discount of 5 cents per bushel to Chicago.[5] The CBT never placed these amendments into effect, because the proposed discounts were thought to be too great relative to cash market pricing relationships between Chicago and the proposed delivery points. In 1975, these same amendments were resubmitted to the newly formed CFTC for its approval. The Commission approved the proposal for corn (effective with the December 1976 contract month); and the CBT withdrew the soybean proposal. In 1978, the CBT resubmitted the proposal to add Toledo (but not St. Louis) as a delivery point for the soybean contract at a discount of 8 cents per bushel. The Commission approved those amendments, effective with the November 1979 contract month.

2. Proposal to Add St. Louis as a Soybean Futures Delivery Point

In July 1989, a commercial long trader held large long positions that exceeded the amount of soybeans that short traders were able to deliver at the contract's then existing delivery points and indicated that it would stand for delivery on its positions. This prompted the CBT to declare a market emergency, taking action to ensure an orderly liquidation of that futures contract month. In response to the outpouring of concerns over the adequacy of the contract's delivery provisions expressed by market participants after this incident, the CBT in 1990 proposed a number of changes to its soybean and grain futures contracts. These included adding St. Louis as a delivery point for soybeans at a discount of 4 cents per bushel to Chicago. Based upon evidence that the proposed discount for St. Louis delivery was too great relative to cash market pricing relationships, the Commission returned this submission for further justification under Commission Rule 1.41(b). The Commission also reiterated its view that the CBT should consider more substantive changes to its soybean and grain futures contracts in order to ensure adequate deliverable supplies.

In response to the heightened concerns over the adequacy of the CBT grain and soybean delivery points renewed by the July 1989 market emergency, the National Grain and Feed Association, the CBT, the General Accounting Office, and the Commission all conducted or sponsored studies on the delivery terms of the soybean and grain futures contracts. These separate studies were all completed in 1991. They generally found that long-term trends in the structure of the grain industry had affected adversely the viability of the cash markets at Chicago and Toledo. Their specific conclusions are summarized below.

a. MidAmerica Institute

The CBT commissioned the MidAmerica Institute to conduct a study of its corn and soybean futures contracts. The study concluded that, based on an analysis of cash and futures price data for the 1984–89 period, the delivery process for these contracts effectively resulted in the convergence of futures prices and cash prices at the contracts' Chicago and Toledo delivery points. The study noted, however, that the Chicago-Great Lakes-East Coast cash market for grains and soybeans had declined markedly in importance relative to the Mississippi-Gulf of Mexico area. The study concluded that this decline had reduced the benefits of retaining Chicago as the primary delivery point and of relying upon Toledo as the alternative delivery point. In this respect, the study concluded that Chicago had become a relatively low price point because it is located near the origin, rather than at the destination, of grain and soybean flows for most of the year. The study indicated that this feature enhances the potential for manipulation, since deliverable supplies may only be increased to address a manipulation attempt by drawing these commodities from higher value locations. The study noted that such an action to increase deliverable supplies is costly and that a manipulator can profitably exploit this cost to inflate futures prices artificially under conditions that recur periodically in grain markets. The study also noted that the decline in Chicago's tributary area means that more hedgers must bear additional basis risk when Chicago is the primary delivery point.

This increased susceptibility to manipulation and basis risk, the study concluded, could be ameliorated by improving the alignment of the contracts' delivery mechanisms with

[5] Toledo was established by the CBT as a delivery point for its wheat futures contract in the early 1970s.

prevailing cash market conditions and pricing relationships. In particular, the addition of an effective Mississippi River delivery point, such as St. Louis, and the establishment of price differentials for all delivery locations at levels reflecting typical cash price relationships, was recommended. The addition of a delivery point at an active cash market location such as St. Louis, the Institute noted, would enhance the futures contracts' hedging performance by improving the extent to which their prices reflect prices in primary cash market channels. In this regard, however, the MidAmerica Institute cautioned that, because of their limited storage capacity and throughput nature, the addition of St. Louis warehouses would only modestly enhance deterrence of manipulative activity.[6]

b. Food Research Institute

The Food Research Institute of Stanford University was commissioned by the National Grain and Feed Association to study these issues as well. This study concluded that deliverable stocks at the contracts' delivery points were, in the years preceding the study's completion in 1991, too low relative to the size of positions normally held by the largest traders. It concluded that, in this respect, positions held by the largest traders were of such a size relative to deliverable stocks that neither delivery nor the threat of delivery was a credible alternative. Moreover, this limited level of deliverable stocks was not due to any warehouse capacity constraints existing at that time, but rather to the general inexorable decline of cash market activity at grain terminal markets—Chicago, in particular.

The Food Research Institute recommended that the CBT address this fundamental problem by rethinking its specifications requiring delivery of grain and soybeans in-store via warehouse receipts. Suggested alternatives included barge delivery, incorporating aspects of a call on production, or delivery at Mississippi River export facilities, with the receiver given the option as to when the product is loaded upon one month's notice.[7]

c. The CFTC

The Commission staff's study of the contracts' delivery terms reviewed and analyzed the general cash market trends and the specific cash market conditions at Chicago and Toledo during the period 1960 through 1990. The study found that Chicago and, to a lesser extent, Toledo had declined substantially as storage locations for corn and soybeans to be exported via the Great Lakes and shipped to other U.S. destinations for domestic consumption purposes. In addition, the study analyzed several potential alternative delivery-point specifications for the corn and soybean futures contracts, which would locate the contracts' delivery points within the commodities' primary cash market channels. These included delivering corn and soybeans in-store at Central Illinois warehouses via warehouse receipts; making delivery at Illinois River barge-loading, or Mississippi River vessel-loading export facilities via shipping certificates; and cash settlement. The study concluded that these alternatives, by aligning the contracts' terms more closely with the underlying cash markets for corn and soybeans, would thereby reduce the potential for market problems and concomitant regulatory interventions.

d. General Accounting Office (GAO)

At the request of the Chairman of the Agriculture Committee of the U.S. House of Representatives, the GAO completed a review of the CBT grain and soybean futures delivery-point issues in 1991. The GAO conducted interviews of interested parties, including CBT and Commission officials, and reviewed the above-noted studies prepared by the MidAmerica Institute and the Stanford University Food Research Institute.

In its study, the GAO noted that CBT officials believed that changing delivery points might interfere with the economic purposes of futures trading and that surveillance and disciplinary action programs rather than changing delivery points might be better suited to preventing potential market manipulation. The GAO noted that, in contrast, the Commission was reluctant not to alter futures contract terms that in its judgement resulted in an increased threat of manipulation and required an excessive level of regulatory intervention to prevent frequent market congestion, price distortions or manipulation. The GAO also noted that the MidAmerica and Food Research Institute studies supported the need for the CBT and the Commission to assess alternatives for improving how delivery points for grain and soybean futures contracts meet the economic purposes and anti-manipulation goals of the Act.

e. Symposium on CBT Grain and Soybean Delivery Point Issues

In conjunction with the completion of these studies, in September 1991, the Commission sponsored a symposium to discuss these issues. Attendees at that symposium represented a broad cross section of interested parties, including major grain companies, academic institutions, the CBT, and the Commission. Members of the grain industry generally agreed that the performance of the futures contracts under their current delivery specifications was not satisfactory in all respects, but disagreed on the degree of the problem and the nature of the possible solutions. Although acknowledging that Chicago was a declining cash market, a CBT representative nevertheless maintained that Chicago was still a viable delivery point based upon the variety of transportation alternatives available to long traders taking delivery at that location. The CBT representative further indicated that the CBT was continuing to study the situation and develop appropriate revisions to the contracts' delivery specifications.

f. Final CBT Proposals Responding to July 1989 Soybean Incident

In 1992, the CBT re-submitted its proposal to add St. Louis as a delivery point for soybeans, at a premium of 8 cents per bushel rather than at a discount of 4 cents per bushel as previously proposed in 1990. The CBT also proposed to revise the price differential for St. Louis corn futures deliveries to a premium of 7 cents per bushel from the then existing 4 cents per bushel discount and to reduce the discount for the delivery of corn in Toledo to 3 from 4 cents per bushel. Although approving these proposals in April 1992 for implementation beginning with the December 1993 corn contract month and the November 1993 soybean contract month, the Commission, in its approval letter, stated that it:

> understands that the addition of St. Louis as a delivery point for soybeans and wheat and revisions to locational differentials for corn were intended by the Exchange to provide additional deliverable supplies for these contracts. Nevertheless, the Commission is concerned that these changes may not be sufficiently responsive to the long run changes in the cash market, and therefore may not significantly alleviate concerns about the contracts' specifications in either the immediate future or the long run.

[6] Providing for emergency barge or rail delivery, or for some mechanism of ensuring access of throughput elevators in the vicinity of that city to the delivery process, would, according to the MidAmerica Institute, address these shortcomings in St. Louis as a potential additional delivery point.

[7] The Food Research Institute study suggested that the CBT consider adopting the delivery procedures used on the New York Mercantile Exchange's crude and heating oil futures contracts if the CBT selects a Gulf of Mexico delivery point system.

In particular, in view of the long term trends in the cash market, the Commission is concerned about the continued reliance on warehouse receipts in terminal markets as the sole source of deliverable supplies for each of these contracts. Further, the Commission notes that the limited warehouse space at St. Louis may be devoted primarily to ''through-put'' merchandising activities and, as a result, operators of these facilities may be reluctant to make significant space and/or receipts available for purposes of futures delivery.

The Commission concluded by again putting the CBT on notice that:

[i]n consideration of this, the Commission believes that the CBT should continue its efforts to develop comprehensive contract revisions that will enhance deliverable supply and reduce the need for formal and informal market intervention by the Exchange or the Commission. It is the Commission's belief that such revisions may require linking contract terms more directly to commodity flows or to decentralized storage. In the Commission's view, continued active consideration of this matter is particularly advisable in view of the possibility of further declines in the viability of the Chicago delivery area and the time necessary to develop and fully implement more substantive contract changes.

V. Recent Events—1995 to the Present

As predicted by the Commission in 1992, the CBT's response to the continuing deterioration of the cash market at its delivery points proved to be a solution of limited effect and short duration. In the fall of 1995, three of the existing six Chicago delivery warehouses ceased operations. As a result, Chicago delivery capacity was immediately reduced by more than half—from 53.9 to 22.8 million bushels. Significant as this drop in capacity is, it must be kept in mind that actual supplies available in those warehouses have been a fraction of the total capacity. Nevertheless, the precipitous drop in warehouse capacity served to reawaken concerns over the viability of the contracts' delivery points.[8]

Commission Chairman Mary Schapiro, in an October 11, 1995, letter to the CBT, expressed once again the Commission's concerns regarding the adequacy of the contracts' delivery provisions, stressing that the Commission's concerns were heightened by this further deterioration. Chairman Schapiro requested that the Exchange keep the Commission staff informed on a frequent basis of the progress of a Special Task Force established by the CBT to study the situation. Chairman Schapiro's letter further noted the Commission's recommendation that the Exchange not limit its consideration to short-term responses to the closure of the above-noted Chicago regular elevators. The letter noted, specifically, that the Exchange should consider, in the context of long-run cash market trends, comprehensive contract revisions that would enhance deliverable supply and provide a viable price-basing service for the international grain industry.

1. CBT Task Force.

As noted above, the halving of deliverable storage capacity at Chicago prompted the CBT to form a Special Task Force on September 25, 1995, to determine what changes, if any, were needed to be made to the contracts' delivery terms to ensure adequate deliverable supplies. The Special Task Force held numerous meetings from the date of its establishment through early June 1996. It invited a significant number of individuals, representing a broad cross section of the industry and other interests, to express their views. It considered in depth the merits of a number of suggested alternatives. The Special Task Force's Chairman also briefed the Commission on its progress.

On June 4, 1996, the CBT Special Task Force issued its final recommendations for changing the delivery provisions of the grain futures contracts. The Special Task Force recommended: (1) adding delivery points in East Central Illinois, Northern Illinois River locations, and Milwaukee, Wisconsin, for the corn and soybean contracts, with warehouse receipts continuing to serve as the delivery instrument; (2) reducing the locational price differentials for delivery of corn, soybeans, and wheat at Toledo, Ohio; (3) deleting St. Louis as a delivery point for the corn, soybean, and wheat futures contracts; (4) reducing the daily barge load-out requirement for Chicago elevators from 3 to 2 barges, but permitting the receivers of corn or soybeans to request up to 4 barges per day, which the Chicago warehouseman could provide either entirely from the Chicago elevator or through a combination of loadings at the Chicago elevator and a separate loading point along the Northern Illinois River; and (5) establishing higher minimum financial requirements for regular warehousemen.

2. March 1996 Wheat Expiration Problem

In the midst of the Special Task Force's deliberations, the March 1996 wheat futures contract experienced a problematic liquidation.[9] On the last trading day of this future, a major commercial trader maintained a significant long position against export sales contracts and a major commercial trader who did not own wheat in deliverable position maintained a significant short position until the final few minutes of trading. The commercial short trader and several other short position holders elected to offset their positions rather than make delivery. During the final minutes of trading, this buying interest was met by a lack of selling interest—the large commercial long trader had determined to stand for delivery and had not entered any orders on the close. As a result, wheat futures prices were bid sharply higher, from about $5.00 to over $7.00 per bushel during and after the close of trading. Although the Commission staff report[10] on this incident was not addressed to the causal links, if any, between the delivery specifications for the contract and the problem liquidation, the recent problem in the expiration of the March wheat futures contract may foreshadow similar problems for the corn and soybean futures contracts.

3. CBT Action on Proposals to Revise the Contracts

On September 18, 1996, the CBT's Board of Directors considered the Special Task Force's recommendations and approved for membership balloting all of the Special Task Force's recommended changes except the proposal to add East Central Illinois as a delivery area. On October 17, 1996, the Exchange membership voted to reject the recommended changes by a margin approximately of 2 to 1.

4. More Recent Developments

In the last week of October 1996, Commission staff were notified that one of the three remaining Chicago elevators, operated by Countrymark, has stopped accepting soybeans and grain for the indefinite future. Accordingly, at

[8] Moreover, as also anticipated by the Commission in 1992, there have been few, if any, warehouse receipts registered for delivery on the soybean (or wheat) futures contracts at St. Louis, since it became a soybean (and wheat) delivery point in 1993. In addition, despite the substantial increase in the locational price differential applicable to St. Louis corn futures deliveries under the 1992 amendments, there continues to be very little futures delivery activity in corn at that location.

[9] As noted above, although this notification under section 5a(a)(10) of the Act applies only to the CBT corn and soybean futures contracts, many of the same trends affecting the corn and soybean futures contracts have affected the wheat futures contract, as well. The Commission is requesting the CBT to conduct an in-depth reconsideration of the delivery specifications for its wheat contract within the next 120 days, similar to that which it undertook for its corn and soybeans futures contracts.

[10] See, Report on Chicago Board of Trade March 1996 Wheat Future Expiration on March 20, 1996, (November 26, 1996).

present, there are only two functioning regular Chicago elevators. They have a combined rated storage capacity of 14.7 million bushels.[11]

VI. Requirements of Section 5a(a)(10) of the Act

The Commodity Exchange Act was extensively amended in 1974. Those amendments substantially expanded the Act's scope, created a regulatory system for the trading of all commodity futures contracts, and created the Commission as an independent regulatory agency to administer and to enforce the Act's provisions. Many of these amendments were designed to address apparent weaknesses in the prior statutory scheme. In this regard, the Commission's predecessor agency, charged with administering the Act, testified before the House Committee on Agriculture, that:

> For many years, the Department has been urging the exchanges to provide an adequate number of delivery points in the production areas and along the routes by which the various commodities move from the producer to the consumer. The need for such points is readily apparent. On July 20, 1973, the last trading day for July corn on the Chicago Board of Trade, the futures price rose $1.20 per bushel. * * * Transportation problems made it difficult to move corn into the Chicago area and warehouses in that area were either filled or reluctant to accept corn coming in for delivery on the futures contract. The result was that many who would have made delivery had there been provision for delivery at other points where supplies are ordinarily available * * * were * * * forced to buy futures contracts at an escalating price largely caused, not by an overall change in the supply or demand for corn, but an artificial shortage. * * *
>
> [T]he establishment of * * * additional delivery points * * * ought to be made by the exchanges in the first instance. Our concern here is simply making sure that if they do not do the job properly, adequate authority is present for the regulatory agency to take action should such be desirable.

H.R. Rep. No. 975, 93rd Cong. 2d Sess. 77 (1974).

In recognition of the crucial role played by adequate deliverable supplies in promoting orderly markets, Congress enacted Section 5a(a)(10) of the Act, which specifies, in part, that each contract market is required to:

> permit the delivery of any commodity, on contracts for sale thereof for future delivery of such grade or grades, at such point or points and at such quality and locational price differentials as will tend to prevent or diminish price manipulation, market congestion, or the abnormal movement of such commodity in interstate commerce.

7 U.S.C. § 7a(a)(10).

Moreover, Congress granted the Commission authority under Section 5a(a)(10) of the Act to determine whether exchange rules regarding delivery terms fail to accomplish these objectives and to take appropriate remedial action.

As an aid to the exchanges in meeting the statutory requirements for designation, including the provisions of Section 5a(a)(10), the newly formed Commission published Guideline No. 1 (now codified at 17 CFR Part 5, Appendix A). As explained in Guideline No. 1, to demonstrate continuing compliance with the Act, exchanges must provide evidence that each individual contract term conforms with the underlying cash market and provides for a deliverable supply that will not be conducive to price manipulation or distortion and which can be expected to be available to the short trader, and saleable by the long trader at its cash market value in normal cash marketing channels.[12]

VII. Compliance of the CBT's Corn and Soybean Delivery Point Specifications with Section 5a(a)(10) of the Act

The Commission believes that the CBT's corn and soybean futures contracts currently do not meet the requirements of Section 5a(a)(10) of the Act that delivery terms be specified which ''tend to diminish price manipulation, market congestion, or the abnormal movement of such commodity in interstate commerce.'' As noted, the current level of total regular capacity in Chicago available for the storage of deliverable corn, soybeans, wheat, and oats has been reduced by about 60 percent since the fall of 1995, as three of the six regular Chicago warehouse operators closed operations. Moreover, effective regular storage capacity could decline to even lower levels (about 12 million bushels of effectively available storage capacity) in the very near future in view of the potential that another existing regular elevator may cease operations. With the withdrawal of three—and now, apparently four—elevators at the contracts' Chicago delivery point, the available deliverable supplies potentially have been reduced to levels which increase the futures contracts' susceptibility to price manipulation or distortion.

The recent closure of these elevators in Chicago greatly exacerbates a deliverable supply situation that is already severely limited due to the low levels of cash market activity in Chicago. These closures confirm that Chicago is at the periphery of normal cash market channels for corn and soybeans. The reduced number of regular warehouses, the frequently low levels of stocks available, and the lack of commodity flows to Chicago resulting from normal cash market activities increase the likelihood that futures prices may become distorted and that abnormal interstate movements of corn or soybeans may be required to meet futures delivery requirements.

Moreover, this situation is not confined to Chicago, the primary delivery point on the contracts. The inadequacy of the contracts' overall delivery point specifications is suggested by the very low deliverable supply conditions frequently observed at season-end for the corn and soybean futures contracts during recent years. As shown in Chart 3, season-end deliverable stocks of corn at all CBT delivery points combined have often fallen to very low levels from 1980 to the present, independent of the recent precipitous decline in regular storage capacity in Chicago. In particular, deliverable stocks of corn fell to as low as 2 million bushels (400 contracts) on September 1, 1990. As shown in Chart 4, since 1980, deliverable stocks of soybeans at all delivery points combined also have declined to levels as low as 1.2 million bushels (240 contracts) in 1985 and 1.05 million bushels (210 contracts) in 1996.[13]

[11] Trade sources indicate that, if the latest elevator to stop accepting grain and soybeans closes, the effective regular storage capacity in Chicago which is available to hold grain and soybeans will be reduced to an even lower level, to about 12.0 to 12.5 million bushels. These lower effective capacity estimates reflect the fact that a certain proportion of storage within an elevator must be kept empty to allow blending of the stored grain and soybeans and for the efficient movement of these commodities into and out of the facility.

[12] Specifically, with respect to delivery points, Guideline No. 1 provides that exchanges must consider: (1) the nature of the cash market at the delivery point; (2) the composition of the market at that point; (3) the normal commercial practice for establishing cash market values and the availability of published cash prices reflecting the value of the deliverable commodity; (4) the level of deliverable supplies normally available, including the seasonal distribution of such supplies; and (5) any locational price differentials that would be applicable to the delivery points, including the economic basis for discounts or premiums, or lack thereof, applying to delivery points. In addition, Guideline No. 1 specifies that contract markets must provide information which describes the delivery facilities, including: (1) the type of delivery facility at each delivery point; (2) the number and total capacity of facilities meeting contract requirements; (3) the proportions of such capacity expected to be available for traders who may wish to make delivery, and seasonal changes in such proportions; and (4) the extent to which ownership and control of such facilities is dispersed or concentrated.

[13] The low levels of corn and soybean stocks at the contracts' delivery points observed in September 1996 were associated with low stock levels throughout the U.S. Nevertheless, it is clear that low stocks at the contracts' delivery points are

Further, effective deliverable stocks of corn (stocks at Toledo and Chicago minus stocks at St. Louis) have declined to even lower levels on other occasions.[14] For instance, on September 1, 1996, effective corn stocks fell to about 1.1 million bushels (about 220 contracts).

BILLING CODE 6351–01–P

also a problem in years where U.S. stock levels are not at uniformly low levels.

[14] As discussed above, there have been very few deliveries at St. Louis since this location became a delivery point in the 1970s. The lack of deliveries at this point reflects the fact that elevators in St. Louis, unlike the regular elevators in Chicago and Toledo, operate as barge-loading facilities rather than storage facilities. Corn and soybeans received at St. Louis elevators are stored only temporarily until they can be loaded into barges.

Chart 3 - Corn Stocks on First Friday of September in Deliverable Position at All CBT Regular Elevators vs. Total Open Interest for the September Contract and Spot Month Speculative Limit Level, 1980 Through 1996

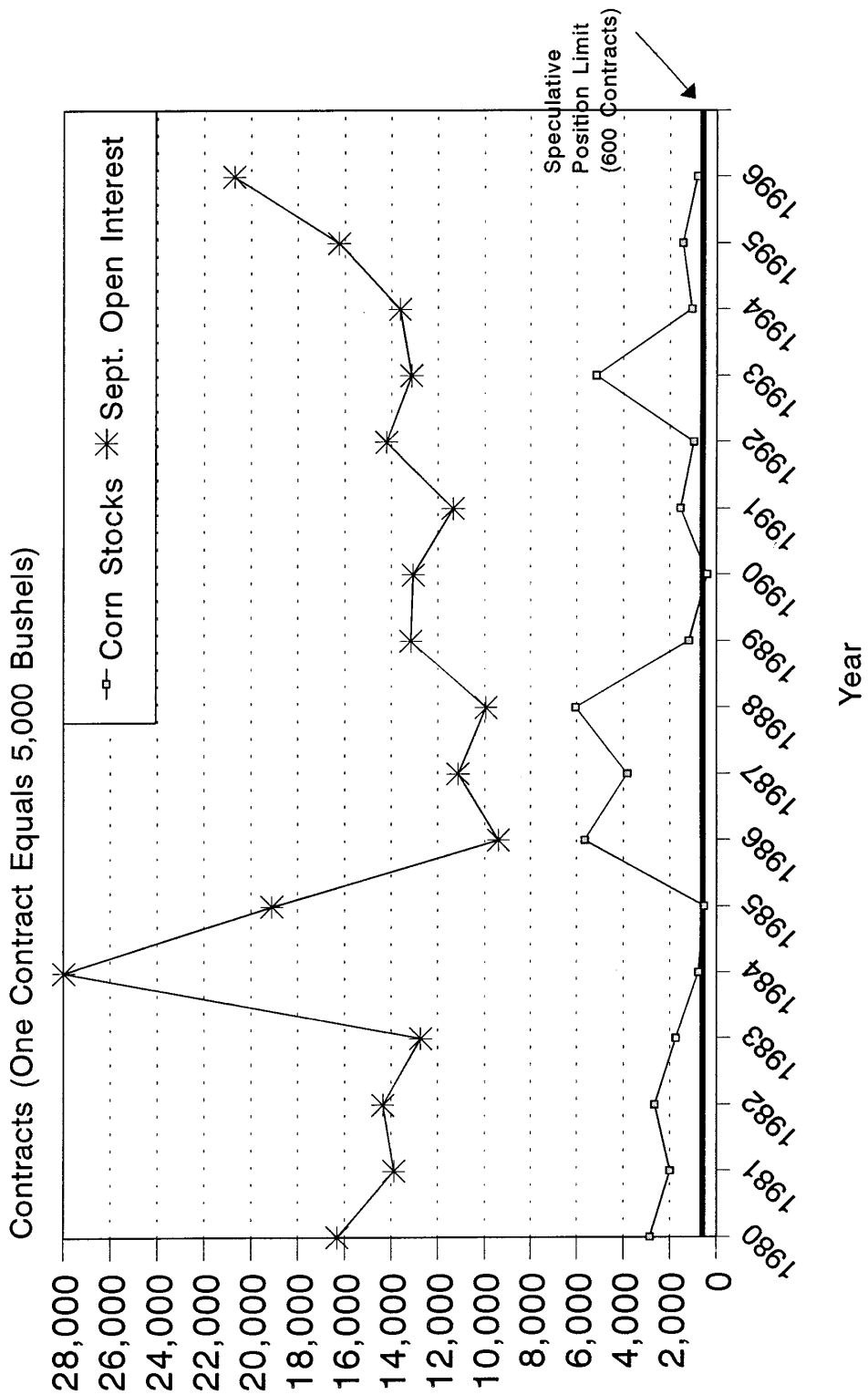

Source: CBT and CFTC Stocks of Grain Reports. Footnotes: Stocks reported as of the First Friday in September for CBT Regular Elevators in Chicago, Toledo and St. Louis. September Futures Contract Open Interest on the Last Day of August.

Chart 4 - Soybean Stocks on First Friday of September in Deliverable Position at All CBT Regular Elevators vs. Total Open Interest for the September Contract and Spot Month Speculative Limit Level, 1980 through 1996

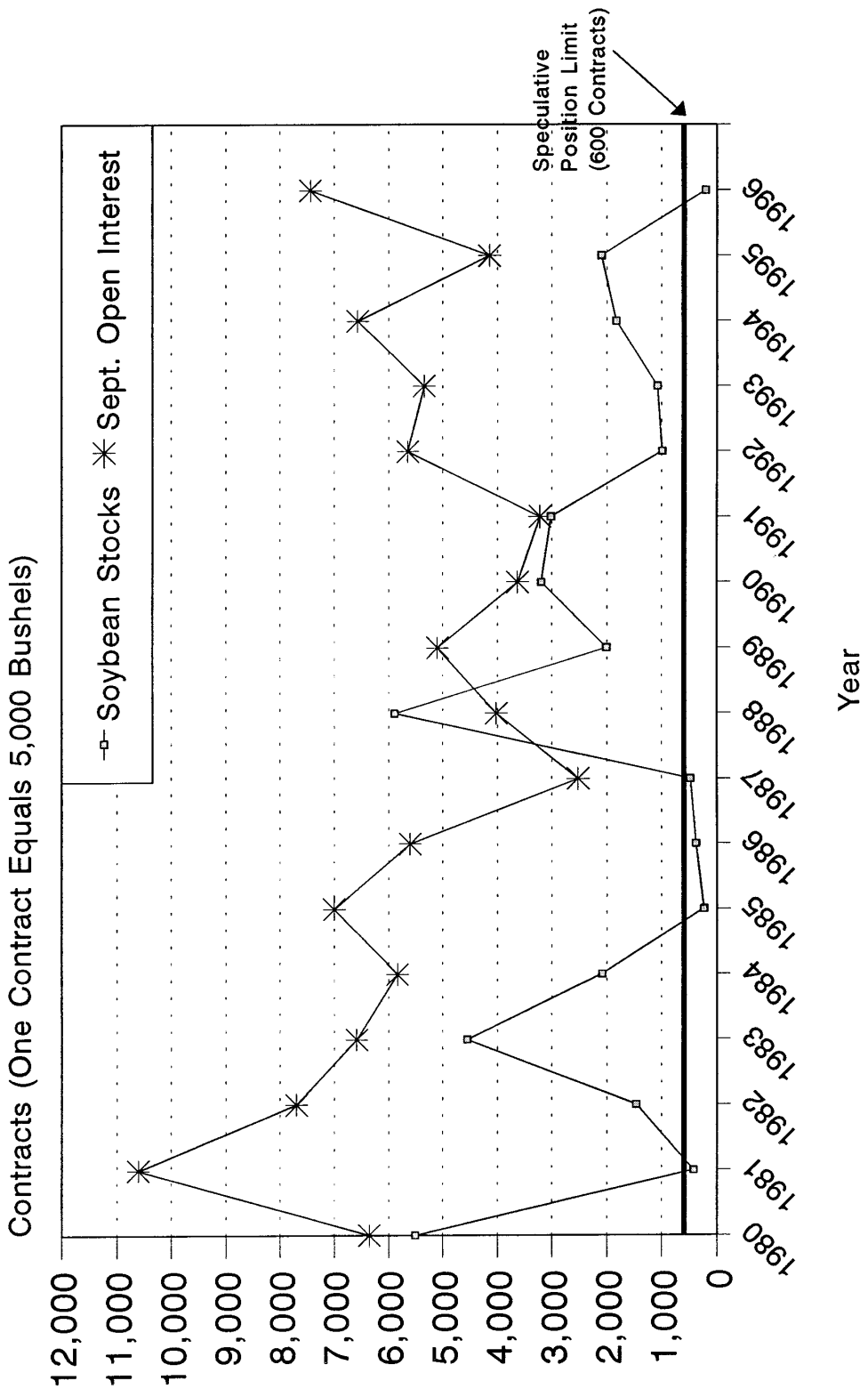

Source: CBT and CFTC Stocks of Grain Reports. Footnotes: Stocks reported as of the First Friday in September for CBT Regular Elevators in Chicago, Toledo and St. Louis. St. Louis became a soybean futures delivery point in 1993. September Futures Contract Open Interest on the Last Day of August.

BILLING CODE 6351–01–C

Charts 3 and 4 also indicate the comparative levels of open interest for the expiring September contract month and the spot month speculative position limits for the corn and soybean futures contracts. These figures indicate, for instance, that total stock levels frequently have fallen to levels near or below the maximum number of contracts a single speculative trader may hold during the delivery periods of expiring contract months (600 contracts). Moreover, commercial firms may have been granted exemptions from these limits for purposes of bona fide hedging. These comparisons show that the potential requirements for futures delivery frequently exceed, by a substantial degree, the level of deliverable stocks available for futures contracts. They thereby indicate the increased potential for market problems as well as the increased potential for regulatory intervention required to ensure that positions are liquidated in an orderly fashion.

Moreover, the recent loss of substantial regular warehouse capacity likely will cause further deterioration in the chronically low deliverable stock situation. The primary factor drawing deliverable supplies to Chicago has been the existence of warehouse capacity for futures contract deliveries at that location, rather than traditional cash market demand. Numerous trade sources and cash market experts have verified that the cash market flow of corn and soybeans to Chicago elevators for purposes other than futures delivery is weak or non-existent. Accordingly, the Commission believes that the recent decline in the number of grain merchandisers in Chicago will necessarily result in a further decline of stocks from the low levels depicted in the charts.

In such situations, where stocks are available for delivery only at chronically low-levels due to the location of a contract's delivery points at the periphery of cash market channels, futures prices can more become distorted relative to cash market prices. This results from the need to attract the necessary quantities of corn or soybeans, which are otherwise not normally available, to the contracts' delivery points to fulfill delivery requirements. Thus, when the delivery points for a futures contract are not located within active cash market channels for the underlying commodity, the likelihood increases that abnormal interstate movements of the commodity will be required to meet futures delivery requirements. In contrast, when a contract's delivery points are located within active cash market channels for a commodity, deliverable supplies readily can be made available for delivery from stocks at, or flows of the commodity through, the contract's delivery points at a price that is representative of prevailing cash market prices for the commodity.

These circumstances were clearly envisioned by the MidAmerica Institute study discussed above, which concluded that because Chicago had become a low price point, deliverable supplies required to respond to an attempted manipulation could only be drawn from higher value locations, thereby enhancing the potential for, and possible profitability of, market manipulations.[15]

The situation is critical in that, except for cash-settled contracts, the threat of delivery is the mechanism through which the market forces futures and cash prices to converge. To the extent that delivery is not a viable alternative because of inadequate deliverable supplies, trading will increasingly require regulatory intervention to remain orderly, particularly during contract month expirations.

Accordingly, the Commission has determined to notify the CBT under the provisions of Section 5a(a)(10) of the Act, that for the reasons discussed above, and in light of the CBT's failure to date to take appropriate corrective action, the Commission finds that the CBT rules specifying the terms of its corn and soybean futures contracts do not accomplish the Section 5a(a)(10) objectives of ''tend[ing] to prevent or diminish price manipulation, market congestion, or the abnormal movement of such commodity in interstate commerce.''

Further, the Commission hereby notifies the CBT, under the provisions of Section 5a(a)(10) of the Act, that the CBT has until March 4, 1997 to adopt and submit for Commission approval ''appropriate changes'' to CBT rules.

VIII. Alternative Contract Specifications.

To avoid further proceedings under Section 5a(a)(10), the CBT must make changes to the contracts which, in the opinion of the Commission, are necessary to accomplish the objectives of this subsection of the Act. Although the Commission has not reached a conclusion as to the exact nature of the changes which are ''necessary to accomplish the objectives'' of providing delivery terms ''as will tend to prevent or diminish price manipulation,'' it is providing guidance to the CBT on a range of possibilities which could constitute ''appropriate changes'' by providing for the necessary, viable linkage with the cash market. By providing these alternatives, the Commission is not limiting the CBT's ability to respond to this Section 5a(a)(10) notification, nor is it specifying exact design criteria. Rather, these are examples of various means by which the Commission believes the objectives of the section could be met. In any event, the particular contract specifications proposed by the CBT in response to this notification, in order to meet the statutory requirement, should provide for a linkage with the cash market through specific terms which are in conformity with a substantial segment of that underlying market.

1. Modified CBT Special Task Force Proposal

The contract amendments recommended by the CBT Special Task Force, with certain modifications, could potentially provide for the necessary increase in deliverable supplies. Under the Special Task Force proposal, futures delivery would continue to be made at all locations by the transfer of a warehouse receipt for grain in store. Chicago and Toledo would continue as delivery points, with Chicago remaining the par delivery location, St. Louis being deleted, and existing discounts for Toledo delivery being reduced to 2 from 3 cents per bushel for corn and to 4 from 8 cents per bushel for soybeans.

The Special Task Force also proposed that delivery be permitted at regular warehouses in Milwaukee, in East Central Illinois (ECI), and on the Northern Illinois River (NIR).[16] Vessel deliveries of corn and soybeans in Milwaukee would be at par, with rail and barge deliveries subject to a discount of 8 cents per bushel. Corn and soybeans in store at regular ECI warehouses would be deliverable at discounts of 4 cents and 8 cents per bushel, respectively.[17] Futures delivery at NIR warehouses would be at par for corn and at a discount of 4 cents per bushel for soybeans.

[15] The inclusion of Toledo does not cure this fundamental flaw because it, too, is on the periphery of the cash market.

[16] The ECI delivery area would encompass the counties of Champaign, Coles, Douglas, Ford, and Iroquois. The NIR delivery area would consist of that part of the Illinois River that lies between Creve Coeur and Chicago.

[17] The recommended changes also would permit delivery receivers to require ECI regular warehouses to load the delivery corn and soybeans into barges at NIR barge-loading facilities at a premium of 4 cents per bushel. This provision implies that corn would be deliverable in barges on the NIR at par, while soybeans would be deliverable on the NIR at a discount of 4 cents per bushel.

However, as to this proposal, the following changes would be necessary to provide for an economically effective linkage of the futures contracts with the cash market:

1. In view of the infrequent participation of St. Louis as a delivery point, as well as the similarly limited storage capacity and through-put nature of the barge-loading warehouses on the NIR, the Special Task Force proposal to permit delivery in NIR barge-loading warehouses must be modified to allow delivery at off-water warehouses located within a specified distance of this portion of the Illinois River, in order to make warehouses located on the NIR an effective source of deliverable supplies.[18] The specified area should encompass corn and soybean storage facilities that typically store these commodities on a seasonal basis and from which substantial deliverable supplies would be available.

2. The recommended locational price differentials for delivery in store at Toledo, the ECI, and warehouses located on or near the NIR should be modified so that they reflect commonly observed cash price relationships with the contracts' other delivery locations. Specifically, for deliveries at NIR barge-loading facilities, the price differential levels selected should reflect the fact that corn and soybeans become more highly valued the further south the delivery location is on the NIR.

2. Illinois River Shipping Certificate Delivery Alternative

An alternative specification that could also result in the necessary increase to deliverable supplies would replace the existing warehouse-receipt-delivery instrument with a shipping certificate and provide for delivery at Illinois River barge loading facilities, in addition to the contracts' existing Chicago, Toledo, and St. Louis delivery points.[19] The Illinois River delivery area could be specified to include all or a substantial part of that River. The contracts' par pricing location could be shifted to a delivery location/area that has an active cash market, with locational price discounts for other delivery points/areas set at levels that fall within the range of commonly observed cash price differences between the specified delivery locations.

3. Lower Mississippi River Export Alternative

This alternative would eliminate the contracts' existing delivery locations and delivery instrument in favor of an export-oriented contract with a shipping certificate as the delivery instrument. The shipping certificate would call for delivery at export locations on the lower Mississippi River.[20]

4. Cash Settlement Alternative

This alternative would replace the contracts' existing delivery provisions with cash settlement provisions. The cash price index could be based on the USDA-quoted prices for corn and soybeans in the primary production or export market areas on the last day of trading or any other method of calculating a cash-settlement price consistent with Guideline No. 1.

Section 5a(a)(10) of the Act authorizes the Commission to change or supplement the terms and conditions of futures contracts. The Commission would prefer, however, not to take such an action. Rather, the Commission looks forward to receiving for its approval proposed modifications from the CBT to the delivery specifications for the CBT's corn and soybean futures contracts which satisfactorily address the issues discussed in this letter. In the event that the Commission fails to receive such proposed amendments by March 4, 1997, the Commission is prepared to take appropriate action under Section 5a(a)(10) of the Act to address the situation.

By the Commission,

Jean A. Webb,

Secretary of the Commission.

The Commission has determined that publication of the notification to the CBT for public comment will assist the Commission in its consideration of these issues, including in particular, the eventual response of the CBT. Accordingly, the Commission is requesting written data, views or arguments from interested members of the public. Commenters are specifically requested to address the following issues:

1. To what extent do the current CBT delivery specifications for corn and soybeans reflect the structure of the cash market for the underlying commodity? To the extent the terms of the contracts depart from commodity flows in the cash market, does this have any detrimental impact on the trading of these contracts?

2. What is the likely effect of failing to modify the current terms of the contract?

3. To what extent would the alternatives listed by the Commission increase deliverable supplies on the contracts, and would such increases be sufficient under the Act?

4. The Commission identified several changes to the CBT Task Force's recommendations necessary to provide ''a meaningful increase in the level of economically deliverable supplies available for futures delivery.'' To what extent is it necessary to permit delivery in off-water warehouses if delivery on the contract continues to call for warehouse receipts at warehouses on the Illinois river, which largely tend to be through-put facilities? What is the range of discounts or premiums commonly observed in the cash market for corn and soybeans that would be deliverable in Toledo, East Central Illinois, or the Northern Illinois River, compared to Chicago?

5. Is modification of the contracts' delivery provisions likely to enhance or detract from their hedging or price-basing utility?

6. On a related issue, to what extent do the current CBT delivery specifications for the futures contract for wheat reflect the structure of the cash market for the underlying commodity? To the extent that the terms of the futures contract depart from commodity flows in the cash market, does this have any detrimental impact of the trading of futures contracts for wheat?

7. What is the likely effect of failing to modify the current delivery specifications of the wheat contract?

8. What alternatives to the current delivery specifications would increase deliverable supplies on the wheat contract, while maintaining its utility for hedging and price basing?

Issued in Washington, D.C., this 19th day of December, 1996, by the Commodity Futures Trading Commission.

Jean A. Webb,

Secretary of the Commission.

[FR Doc. 96–32708 Filed 12–24–96; 8:45 am]

BILLING CODE 6351–01–P

[18] As recommended by the Special Task Force for deliveries at ECI warehouses, the receiver of corn and soybeans in an off-water warehouse could be given the option of taking delivery of corn and soybeans in barges from regular warehouses on the NIR or by rail from the off-water facility.

[19] The terms of the shipping certificate could be specified in several different ways. For example, the shipping certificate could require that the issuer ship corn or soybeans in rail cars or trucks to a location nominated by the buyer within the specified delivery areas, with the buyer having the option of requiring that the corn or soybeans be loaded into barges at a specified premium.

[20] As in alternative 2, the shipping certificate's terms may be specified in different ways. In this case, for example, the shipping certificate could require the issuer to deliver corn or soybeans in barges or rail cars to an export location on the lower Mississippi River specified by the buyer, with provision for delivery corn and soybeans to be loaded into vessels at a specified premium.

DEPARTMENT OF DEFENSE

Office of the Secretary

Defense Partnership Council Meeting

AGENCY: Department of Defense.

ACTION: Notice of meeting.

SUMMARY: The Department of Defense (DoD) announces a meeting of the Defense Partnership Council. Notice of this meeting is required under the Federal Advisory Committee Act. This meeting is open to the public. The topics to be covered are the Federal Managers Association (FMA) membership on the Council and a discussion of general DoD Human Resources initiatives.

DATES: The meeting is to be held January 22, 1997, in room 1E801, Conference Room 7, the Pentagon, from 1:00 p.m. until 3:00 p.m. Comments should be received by January 14, 1997, in order to be considered at the January 22 meeting.

ADDRESSES: We invite interested persons and organizations to submit written comments or recommendations. Mail or deliver your comments or recommendations to Mr. Kenneth Oprisko at the address shown below. Seating is limited and available on a first-come, first-served basis. Individuals wishing to attend who do not possess an appropriate Pentagon building pass should call the below listed telephone number to obtain instructions for entry into the Pentagon. Handicapped individuals wishing to attend should also call the below listed telephone number to obtain accommodations.

FOR FURTHER INFORMATION CONTACT: Mr. Kenneth Oprisko, Chief, Labor Relations Branch, Field Advisory Services Division, Defense Civilian Personnel Management Service, 1400 Key Blvd., Suite B–200, Arlington, VA 22209–5144, (703), ext. 704.

Dated: December 19, 1996.

L.M. Bynum,

Alternate OSD Federal Register Liaison Officer, Department of Defense.

[FR Doc. 96–32822 Filed 12–24–96; 8:45 am]

BILLING CODE 5000–04–M

Department of the Navy

Notice of Availability and Public Hearings for the Draft Environmental Impact Statement (DEIS) for Base Realignment Action for the Naval Sea System Command Relocation to the Washington Navy Yard, Washington, DC

SUMMARY: Pursuant to Section 102(2)(c) of the National Environmental Policy Act (NEPA) of 1969 as implemented by the Council on Environmental Quality regulations (40 CFR Parts 1500–1508), the Department of the Navy (DoN) prepared and filed with the U.S. Environmental Protection Agency a DEIS evaluating the environmental effects of relocating the Naval Sea System Command Headquarters (NAVSEA) from leased space in Arlington, Virginia to the Washington Navy Yard or other government-owned property in the metropolitan Washington, DC area.

In response to the recommendations of the 1995 Department of Defense Base Realignment and Closure Commission (BRAC–95) and legislative requirements of the 1990 Base Realignment and Closure Act (Pub. L. 101–510), the Navy will relocate approximately 4,100 NAVSEA personnel to the Washington Navy Yard (WNY) in Washington, DC. The Navy's DEIS addresses the environmental impacts associated with an increase of personnel at the WNY, as well as, renovation, demolition and new construction of facilities at the installation necessary to accommodate relocated personnel.

The Washington Navy Yard (WNY) occupies 68 acres along the Anacostia River in southeast Washington, DC. Development at the installation began in the early 1800's and continued in response to National defense efforts. Little if any undeveloped land is currently available for new construction at the WNY. The four alternatives considered in the DEIS center around a small group of existing structures and involve variations of renovation and/or demolition and new construction. The BRAC–95 relocation of NAVSEA corresponds to the current use of the WNY as an administrative center and long range plans to convert underutilized facilities at the installation into office space.

The DEIS has been distributed to various Federal, state, and local agencies, elected officials, special interest groups, and three local libraries. A limited number of single copies are available, and may be obtained by contacting the Navy representative listed at the end of this notice. A public hearing to inform the public of the DEIS findings and to solicit comments will be held on January 23, 1997, in Building 101 at the WNY. The meeting facilities will be open at 6:30 PM with the Navy's formal presentation beginning at 7:00 PM.

Interested parties are invited to attend and participate in the Public Hearing. Oral statements will be heard and transcribed by a stenographer; however, to ensure accuracy of the record, all statements should be submitted in writing. In the interest of available time, each speaker will be asked to limit his/her comments to five minutes. If longer statements are to be presented, they should be summarized for the public hearing and submitted in long-form at the hearing or mailed to the address listed at the end of this announcement. All statements, both oral and written, will become part of the public record.

ADDRESSES: Written comments on the DEIS should be mailed to: Department of the Navy, Naval Facilities Engineering Command, Engineering Field Activity—Chesapeake, Mr. Hank Riek (Code 20E), 901 M Street SE, Building 212, Washington Navy Yard, Washington, DC 20374–5018. Comments must be received no later than February 10, 1997. Additional information concerning this notice may be obtained by contacting the Navy at (202) 685–3064, facsimile (202) 685–3350.

Dated: December 20, 1996.

D.E. Koenig,

LCDR, JAGC, USN, Federal Register Liaison Officer.

[FR Doc. 96–32778 Filed 12–24–96; 8:45 am]

BILLING CODE 3810–FF–M

DEPARTMENT OF ENERGY

Record of Decision Programmatic Environmental Impact Statement for Stockpile Stewardship and Management

AGENCY: Department of Energy.

ACTION: Record of decision.

SUMMARY: The Department of Energy (DOE) is issuing this Record of Decision for the Stockpile Stewardship and Management Program, the program through which DOE carries out its statutory responsibility for the United States nuclear weapons program. This Record of Decision is based on the information and analysis contained in the Final Programmatic Environmental Impact Statement (PEIS) for Stockpile Stewardship and Management (DOE/EIS–0236) and other factors, including the mission responsibilities of the Department, and comments received on the Draft and Final PEIS. DOE's decisions will continue the ongoing Office of Defense Programs missions at eight DOE sites, making appropriate adjustments consistent with post-Cold War national security policies. Selected facilities for enhanced experimental capability will be constructed and operated; manufacturing capability at existing weapons industrial plants will be maintained; however, manufacturing capacity will be appropriately downsized; plutonium pit component manufacturing capability will be reestablished.

More specifically, for Stockpile Stewardship, the Department has

decided to: (1) Construct and operate the National Ignition Facility at the Lawrence Livermore National Laboratory; (2) construct and operate the Contained Firing Facility at the Lawrence Livermore National Laboratory; and (3) construct and operate the Atlas Facility at the Los Alamos National Laboratory. Additionally, the Department has decided to transfer a small amount of plutonium-242 material from the Savannah River Site to the Los Alamos National Laboratory to support stockpile stewardship activities.

With respect to Stockpile Management, the Department has decided to: (1) Downsize weapons assembly/disassembly capacity at the Pantex Plant; (2) downsize high explosive component fabrication capacity at the Pantex Plant; (3) downsize weapons secondary and case component fabrication capacity at the Y–12 Plant at the Oak Ridge Reservation; (4) downsize weapons nonnuclear component fabrication capacity at the Kansas City Plant; and (5) reestablish pit fabrication capability, with a small capacity, at the Los Alamos National Laboratory.

FOR FURTHER INFORMATION CONTACT: For further information on the Final Programmatic Environmental Impact Statement, or this Record of Decision, please call 800–776–2765, or write to: Jay Rose, Director, Reconfiguration Group, Office of Technical and Environmental Support, DP–45, United States Department of Energy, 1000 Independence Avenue SW, Washington, D.C. 20585.

The Stockpile Stewardship and Management Program maintains an Internet Home Page at http://web.fie.com/fedix/doeoor.html. This can also be accessed by modem by dialing toll-free (800) 783–3349 or (301) 258–0953 in the Washington, D.C. metropolitan area.

For information on the DOE's National Environmental Policy Act (NEPA) process, please contact: Carol M. Borgstrom, Director, Office of NEPA Policy and Assistance, EH–42, United States Department of Energy, 1000 Independence Ave. SW., Washington, D.C. 20585, (202) 586–4600 or leave a message at (800) 472–2756.

SUPPLEMENTARY INFORMATION:

Background

Since the inception of nuclear weapons in the 1940s, DOE and its predecessor agencies have been responsible for the stewardship and management of the nation's stockpile. Through the system of national laboratories and industrial facilities known collectively as the Nuclear Weapons Complex (Complex), DOE has provided the nation with nuclear weapons and ensured that those weapons remain safe and reliable. The Stockpile Stewardship and Management PEIS analyzes the potential consequences to human health and the environment if certain changes to the Complex are implemented to support DOE's Stockpile Stewardship and Management Program.

The term ''stockpile stewardship'' refers to core competencies in activities associated with research, design, development, and testing of nuclear weapons, and the assessment and certification of their safety and reliability under a Comprehensive Test Ban Treaty. Historically, these activities have been performed at the three DOE weapons laboratories (Los Alamos National Laboratory in New Mexico, Lawrence Livermore National Laboratory in California, and Sandia National Laboratories in New Mexico and California) and the Nevada Test Site. The term ''stockpile management'' refers to core competencies in activities associated with the production, maintenance, surveillance, and disassembly of the nuclear weapons in the stockpile. Historically, these activities have been performed at the DOE nuclear weapons industrial facilities (currently, the Y–12 Plant in Tennessee, the Kansas City Plant in Missouri, the Pantex Plant in Texas and the Savannah River Site in South Carolina).

In response to the end of the Cold War and changes in the world's political regimes, the emphasis of the United States nuclear weapons program has shifted dramatically from developing and producing new-design weapons to dismantlement and maintenance of a smaller enduring stockpile. In accordance with national security policy, including the terms of the Strategic Arms Reduction Talk (START) Treaties, the nuclear weapons stockpile is being significantly reduced. The United States is no longer producing new-design nuclear weapons, and DOE has closed or consolidated some of its former weapons industrial facilities. Additionally, in 1992, the United States declared a moratorium on underground nuclear testing. President Clinton extended this moratorium and decided, in August 1995, to pursue a ''zero-yield'' Comprehensive Test Ban Treaty that he signed in September 1996.

Even with these significant changes, however, DOE's responsibilities for the nuclear weapons stockpile continue. The President and Congress have directed DOE to maintain the core intellectual and technical competencies of the United States in nuclear weapons and to maintain the safety and reliability of the enduring nuclear weapons stockpile. In response to this direction, DOE has developed a science-based Stockpile Stewardship and Management Program to provide a single, highly integrated technical program for maintaining core competencies and ensuring the continued safety and reliability of the stockpile. The Stockpile Stewardship and Management Program has evolved from programs that served this mission over previous decades.

With no new-design nuclear weapons production, DOE expects existing weapons to remain in the stockpile well into the next century. This means that the weapons will age beyond original expectations. Because underground nuclear testing will no longer be available, alternative means must be developed in order to assess and certify the weapons' continued safety and reliability. To meet these new challenges, DOE's Stockpile Stewardship and Management Program has been developed to increase understanding of the basic phenomena associated with nuclear weapons, to provide better predictive understanding of the safety and reliability of weapons, and to ensure a strong scientific and technical basis for future United States nuclear weapons policy objectives.

DOE prepared this Record of Decision pursuant to the Council on Environmental Quality (CEQ) Regulations for implementing the procedural provisions of the National Environmental Policy Act (NEPA) (40 CFR Parts 1500–1508) and the Department of Energy regulations implementing NEPA (10 CFR Part 1021). In making this Record of Decision for the Stockpile Stewardship and Management Program, the Department considered the analysis from the Final Programmatic Environmental Impact Statement (PEIS) for the Stockpile Stewardship and Management Program (DOE/EIS–0236), issued in November 1996, along with other factors such as DOE statutory mission requirements, national security policy, cost, schedule, and technical risks. Additional technical descriptions and assessments of cost, schedule and technical risk are found in the Analysis of Stockpile Management Alternatives (DOE/AL, July 1996), the Stockpile Management Preferred Alternatives Report (DOE/AL, July 1996), and the Technology Basis and Site Comparison Evaluation for the National Ignition Facility (DOE/OAK, September 1996).

In February 1996, DOE published the Draft PEIS for Stockpile Stewardship and Management, which evaluated the siting, construction, and operation of proposed stockpile stewardship facilities and the siting, construction, and operation of facilities proposed for stockpile management at eight alternative sites within the Complex. The 60-day public comment period for the Draft PEIS began on March 8, 1996, and ended on May 7, 1996.

During the comment period, public meetings were held in Los Alamos, Albuquerque and Santa Fe, New Mexico; North Las Vegas, Nevada; Oak Ridge, Tennessee; Kansas City, Missouri; Livermore, California; Washington, D.C.; Amarillo, Texas; and North Augusta, South Carolina. In response to requests from the public, five of the public meetings were joint meetings to obtain comments on both the Stockpile Stewardship and Management Draft PEIS and the Department's Storage and Disposition of Weapons-Usable Fissile Materials Draft PEIS, which were being prepared concurrently. Two of the joint meetings (Amarillo and North Augusta) also addressed issues associated with another EIS then in preparation, the Site-Wide Draft Environmental Impact Statement for the Continued Operation of the Pantex Plant and Associated Storage of Nuclear Weapon Components. In addition, the public was encouraged to provide comments via mail, fax, electronic bulletin board (Internet), and telephone (toll-free 800 number).

Volume IV of the Final PEIS, the Comment Response Document, describes the public comment process in detail, presents comment summaries and responses, and provides copies of all comments received.

The PEIS includes a classified appendix that provides additional information about weapons physics as it relates to the proposed actions for enhanced experimental capability, the stewardship need for plutonium-242 and its transfer to a weapons laboratory, and a number of the classified appendices to unclassified documents summarized or referenced in the PEIS. Applicable regulations provide that Environmental Impact Statements which address classified proposals may be restricted from public dissemination; consistent with the regulations, however, the Department has organized the PEIS so that classified information is segregated in order that the unclassified portions can be made available to the public [40 CFR 1507.3; 10 CFR 1021.340(a)].

For the National Ignition Facility, Contained Firing Facility, and the Atlas Facility, the PEIS included project specific environmental analyses (Appendices I, J and K of the PEIS) to address the detailed environmental impacts associated with siting, construction and operation. Based upon this Record of Decision, the Department intends to proceed with the construction and operation of these three facilities with no further National Environmental Policy Act reviews.

Proposed Actions

Broadly stated, all of the existing basic capabilities of the Complex continue to be required both technically and by national security policy objectives established by the President and Congress. The Stockpile Stewardship and Management PEIS concentrates on three major proposed actions that result from the national security policy constraints placed on the Program. The three major proposed actions are: (1) Providing enhanced experimental capability; (2) rightsizing the industrial base; and (3) reestablishing manufacturing capability and a small capacity for plutonium pit components (the pit is the central core of a nuclear weapon containing plutonium and/or highly enriched uranium that is surrounded by a layer of high explosive). Additionally, the Department considered the transfer of a small amount of plutonium-242 from the Savannah River Site to Los Alamos National Laboratory or Lawrence Livermore National Laboratory in support of stockpile stewardship activities.

1. Proposed Action (1)—Providing Enhanced Experimental Capability for Stockpile Stewardship

Historically, nuclear testing provided the Department with an unambiguous high confidence in the safety and reliability of weapons in the stockpile. As described in Chapters 2 and 3 of the PEIS, without underground nuclear testing, DOE must rely on experimental and computational capabilities, especially in weapons physics, to assess and predict the consequences of problems that may occur in an aging stockpile.

DOE concluded that other approaches to stockpile stewardship would not ensure nuclear weapon safety and reliability, and that such approaches are therefore not reasonable. In addition, DOE concluded that only the three facilities discussed below are sufficiently well understood that they could be proposed and evaluated in detail in the PEIS (see Section 3.1.2 of the PEIS, and the sections below entitled, ''Next Generation Experimental Facilities for Stockpile Stewardship,'' and ''Other Considerations.'')

DOE has considered that there are differing opinions on the technical merit of DOE's proposed actions with regard to enhanced experimental capability. Nuclear weapons design information, including the complex physics of nuclear weapon explosions, is generally classified for reasons of national security and nonproliferation. Even if this information were unclassified, the physics problems remain extremely complex; hence, the reason why nuclear testing was so important to the past program. Both the classification of information and technical complexity of the issues form natural barriers to public communication. The technical complexity, alone, engenders significant debate among qualified experts, especially in the area of high energy density physics.

The PEIS attempts to explain the weapon physics issues in an unclassified, comprehensible manner regarding its relation to mission purpose and need (Chapter 2), proposed actions and alternatives (Section 3.3), and project-specific technical detail (Volume III). In the absence of nuclear testing, there are two basic alternatives: (1) Rely on existing facilities, as described by the No Action alternative, as sources of experimental data; and (2) pursue the enhanced capability of the proposed facilities to provide the sources of experimental data needed.

The nuclear weapons phenomena involved in enhanced experimental capability can be broadly grouped into three categories: (1) Physics of nuclear weapons primaries (the primary contains the main high explosive and the plutonium pit); (2) physics of nuclear weapons secondaries (the secondary contains highly enriched uranium, lithium deuteride and other materials to produce a thermonuclear explosion); and (3) weapons effects (the effects of radiation on nuclear weapons and military systems). Because there are no proposed actions in the PEIS for new facilities designed primarily for weapons effects testing, this issue is not discussed further in this Record of Decision. The physics of nuclear weapons primaries and secondaries are described below, as well as alternatives that are assessed in the PEIS. More detail on the physics of nuclear weapons can be found in Section 2.4.1, 3.3, and Appendices I and K of the PEIS.

1.A. Physics of Nuclear Weapons Primaries

With respect to the physics phenomena from the implosion of the primary, experimental facilities provide physics and computational model validation, material behavior information, improved understanding of the implosion and the ability to assess the effects of defects. Proposed new facilities and site alternatives considered, along with the existing facilities which are part of the No Action alternative, are discussed below.

1.A.1 Alternatives. 1.A.1.1 No Action. The principal diagnostic tools DOE currently uses to study initiation of nuclear weapons primaries are hydrodynamic tests and dynamic experiments (see Section 3.3 of the PEIS). Under the No Action alternative, DOE would continue to use the hydrodynamic and dynamic testing facilities currently available at Los Alamos National Laboratory (LANL), Lawrence Livermore National Laboratory (LLNL), and the Nevada Test Site (NTS), including the Dual-Axis Radiographic Hydrodynamic Test (DARHT) facility currently under construction at LANL (see Section 1.6.2 of the PEIS).

1.A.1.2 Action Alternative—Construct and Operate the Contained Firing Facility (CFF) at Lawrence Livermore National Laboratory (LLNL). Under this alternative, the capabilities of the CFF would be added to the existing facilities at LLNL used to study the physics of primaries. Specifically, the CFF would be an addition to the existing Flash X-Ray Facility (FXR) at LLNL Site 300, Building 801. The facility would provide an enclosed blast chamber to contain debris from high explosive experiments that support the stockpile stewardship program. The containment enclosure would reduce the environmental, safety, and health impacts of current outdoor testing. The enclosure would also improve the quality of diagnostics data derived from testing by better controlling experimental conditions. Because the CFF is an upgrade to an existing facility, sites other than Building 801, at LLNL, would have significant technical disadvantages, and were not evaluated in detail.

1.A.2 Comparison of Alternatives. 1.A.2.1 Cost and Technical Factors. The CFF addition to the existing FXR Facility would cost about $50 million to construct and take about two years to complete. The CFF would improve the quality of diagnostics data derived from testing. Improving diagnostic capability to understand weapon primary behavior is crucial to DOE's ability to continue to certify the safety and reliability of the stockpile in the absence of nuclear testing.

1.A.2.2 Environmental Factors. DOE prepared a Project Specific Analysis (Appendix J of the PEIS) to address the environmental impacts associated with construction and operation of the CFF. Because the proposal for the CFF involves modification to the existing FXR Facility, construction impacts would be negligible. Very little land would be disturbed (less than 1 acre) and the construction activities would largely involve internal modifications to the existing facility.

Impacts associated with operation would also be negligible. The CFF enclosure would reduce gaseous and particulate air emissions from explosives testing, reduce the generation of solid low-level radioactive waste, reduce testing noise, and improve the safety of testing by controlling fragment dispersion. The CFF would not utilize any significant quantities of natural resources, and would not cause any significant socioeconomic impacts at LLNL. LLNL has adequate existing waste management facilities to treat, store, and/or dispose of wastes that would be generated by the CFF. Impacts to human health from CFF operation are expected to be within regulatory limits, and extremely small.

1.A.3 Environmentally Preferable Alternative. The environmentally preferable alternative is to construct and operate the CFF as an addition to FXR, at LLNL. Although this alternative would require construction and additional land utilization, the impacts associated with the construction and operation of this facility are minor and offset by the environmental benefits of the CFF. The CFF would contain releases to the atmosphere from the conventional high explosive detonations presently being conducted uncontained at the FXR Facility, which would continue operation under the No Action alternative.

1.A.4 Decision. DOE's decision is to proceed with the construction and operation of the CFF at Site 300, Building 801, at LLNL. This action is consistent with existing operations at Site 300 and LLNL land-use plans and policies.

Mitigation. The mitigation measures appropriate to the CFF construction and operation will be formalized in a CFF Mitigation Action Plan. The plan will be issued by the DOE and monitored for compliance by its representatives during construction and operation of the CFF. Construction and operation of the CFF are not expected to incur environmental impacts other than those associated with a temporary construction lay-down area. Dust suppression and storm water runoff mitigation technologies will be applied to reduce these impacts to insignificance. A preconstruction survey monitoring for endangered species will be conducted no more than 60 days prior to construction start-up.

1.B. Physics of Nuclear Weapons Secondaries

The energy released by the fission of the nuclear weapons primary activates the secondary assembly, creating a thermonuclear (fusion) explosion. However, the physics of nuclear weapons secondaries deals with the interaction of many dynamic physics processes, including hydrodynamics, thermodynamics, fission, and fusion. Experimental facilities provide improved understanding of thermonuclear ignition, secondary physics and computational model validation, and material behavior information. These facilities will also be useful for investigating other physics phenomena related to the nuclear weapon primary and weapons effects (see Appendices I and K of the PEIS).

1.B.1 Alternatives. 1.B.1.1 No Action. The No Action alternative would limit DOE to the use of existing facilities. The principal facilities currently available are the Nova Facility at Lawrence Livermore National Laboratory (LLNL), and the Pegasus II Facility at Los Alamos National Laboratory (LANL).

1.B.1.2 Action Alternative—Construct and Operate the National Ignition Facility (NIF). Under this alternative, the capabilities of the NIF would add to the existing facilities used to study the physics of secondaries. The NIF would house the world's most powerful laser, focusing 192 laser beams onto a target containing isotopes of hydrogen. NIF experiments are designed to address, to various degrees, certain weapons issues connected with fusion ignition and boosting; weapon effects; radiation transport; and secondary implosion, ignition, and output. Most of these processes occur at very high energy density (i.e., at high temperatures and pressures) and are relevant to a weapon's performance. The NIF would achieve higher temperatures and pressures, albeit in a very small volume, than any other existing or proposed stockpile stewardship facility. The energy available to conduct experiments with the NIF would be about 50 times that available with Nova. Five alternative locations at four DOE sites were studied for the NIF: LLNL, LANL, NTS—Area 22 main site location

and North Las Vegas Facility (NLVF), and Sandia National Laboratories (SNL), New Mexico.

1.B.1.3 Action Alternative—Construct and Operate the Atlas Facility. Under this alternative, the Atlas Facility would be added to the existing facilities used to study the physics of secondaries. The Atlas Facility, a pulsed-power experimental facility that builds upon special equipment existing at LANL TA–35 (the technical area which contains the existing pulsed-power infrastructure), would provide the capability to create pressures and volumes necessary to accurately benchmark weapon-related computational predictions. The need to perform experiments with macroscopic pulsed-power targets, as well as with lasers, exists not only because of the limits of measurement diagnostics and improved ease of measurement at larger scale, but also because some of the physical phenomena that must be investigated cannot readily be scaled down to smaller sizes without affecting some parameters of importance. Existing facilities are not adequate to analyze some secondary physics issues.

1.B.2 *Comparison of Alternatives.* The capabilities that would be provided by the two proposed facilities, the NIF and the Atlas Facility, are independent components needed to improve the understanding of the physics of nuclear weapon secondaries. As explained in Section 3.3 and Appendices I and K of the PEIS, because each facility responds to a different need and provides different capabilities related to nuclear weapons secondaries, they are complementary proposals.

1.B.2.1 Cost and Technical Factors. National Ignition Facility. Total capital costs for construction of the NIF at LLNL would be approximately $1.1 billion. The capital and life-cycle comparative cost evaluation indicates the LLNL site will have the lowest capital and the lowest overall costs (by about 5%) of the alternative sites considered. Construction is anticipated to take about five years.

In regard to technical risk, LLNL has the most extensive experience in developing, designing, constructing, and operating high power, large-aperture, solid-state lasers and optical components. The extensive solid-state laser infrastructure, equipment, and facilities at LLNL exceed those of the alternative sites. LLNL has improved this infrastructure continuously as it has built a succession of highly sophisticated solid-state lasers. LLNL also has the most extensive surrounding high-technology infrastructure.

The Inertial Confinement Fusion Program (ICF) and the NIF have been supported by a succession of independent technical reviews conducted by the National Academy of Sciences (NAS), the Fusion Policy Advisory Committee (FPAC), the Inertial Confinement Fusion Advisory Committee (ICFAC), and the JASON Committee (a group of independent experts who evaluated the Science Based Stockpile Stewardship (SBSS) program). These reviews enabled the Department to plan the next reasonable steps to further the pursuit of ICF goals and to evaluate their relationship to SBSS. In September 1990, the NAS concluded that a solid state glass laser, as proposed for NIF, was the only driver capable of achieving ignition within a decade. Also in September 1990, as part of the Inertial Fusion Energy plan, the FPAC urged support for the ICF ignition facility, driven by a solid state glass laser as recommended by the NAS, as the most important next step in the investigation of inertial fusion energy's potential. In May 1994, the ICFAC stated that they believed that the ICF research and development program has a key role to play in ''science-based stewardship.'' They continued by saying that an essential ingredient in this role will be the achievement of ignition of a fusion capsule in the laboratory. In February 1996, their final report concludes that good progress in target physics continues and that DOE should proceed with the next step in the NIF project. In November 1994, the JASON Committee strongly endorsed the NIF, calling it ''the most scientifically valuable of the programs proposed for SBSS.'' They did not identify any other technologies that could provide the technical capabilities of the NIF. In March 1996, the JASON Committee reiterated their previous comment about the NIF and further concluded, ''that the present ICF Program does make an important contribution to SBSS, and that the NIF will substantially increase this contribution * * *'' The committee recommended proceeding with the NIF.

Atlas Facility. Capital costs to build the Atlas Facility are estimated to be about $43 million. Construction will take about four years. Because LANL has more extensive expertise in microsecond pulsed-power than any other DOE site, and because the Atlas Facility would utilize the extensive existing infrastructure and special equipment available at LANL, no other DOE sites were considered for the Atlas Facility. Proceeding with the construction of the Atlas Facility is also consistent with the November 1994 JASON Committee review mentioned above.

1.B.2.2 Environmental Factors. National Ignition Facility. DOE prepared a Project Specific Analysis (Appendix I of the PEIS) to address the environmental impacts associated with construction and operation of the NIF. Potential environmental impacts were assessed for the No Action alternative and two design capabilities (i.e., Conceptual Design and Enhanced Design options) at all five candidate locations.

The analysis indicates that there would be few differences in the environmental impacts between the candidate sites and little environmental impact in any case. The maximum daily particulate matter concentration in the air during site clearing would exceed applicable air quality standards for suspended particles less than 10 microns in diameter (PM10) at LLNL and the North Las Vegas Facility (NLVF). However, the ambient air quality impacts would be localized and of short duration. Land requirements would be greatest at NTS (45.0 acres), although this acreage is less that 1 percent of the uncommitted land at NTS. Conversely, the least amount of uncommitted land that would be required for NIF would be 7.9 acres at the NLVF. However, this acreage represents the largest percentage of uncommitted land at a candidate site (56 percent). Of greater significance would be the quality of the habitat of the uncommitted land that would be affected by NIF construction. The highest quality habitats that would be affected are forest (9.9 acres) at LANL or desert (45 acres) at NTS. At the other candidate sites, habitat disturbance would occur to previously disturbed grassland (LLNL and SNL) or to an area of sparse vegetation (NLVF). The risk to the public from a facility accident involving the release of radioactive material would be greatest at NLVF and SNL, although the potential for the actual occurrence of such an accident would be extremely low.

Atlas Facility. DOE prepared a Project Specific Analysis (Appendix K of the PEIS) to address the environmental impacts associated with construction and operation of the Atlas Facility. Because the proposal for the Atlas Facility involves modification to the existing facilities within LANL's TA–35, construction impacts are expected to be small. Very little land (0.1 acre) would be disturbed and the construction activities would largely involve internal modifications to existing facilities.

Impacts associated with operations would also be negligible. The Atlas

Facility would not utilize any significant quantities of natural resources, would not cause any significant socioeconomic changes at LANL, and would not generate significant quantities of wastes. LANL has adequate existing waste management facilities to treat, store, and dispose of wastes that would be generated by the Atlas Facility. Impacts to human health from Atlas Facility operations are expected to be small and within regulatory limits.

1.B.3 Environmentally Preferable Alternative. National Ignition Facility. The environmentally preferable alternative is the No Action alternative. However, in the absence of underground nuclear testing, it is the Department's technical judgment that its ability to carry out its statutory mission responsibilities would be impaired without the capabilities that would be provided by the NIF. For this reason, the No Action alternative with regard to the NIF is not reasonable.

Based on the PEIS analysis of the action alternatives, siting the NIF at LLNL would have low or no adverse environmental impacts for most environmental resource categories (land use, air quality and noise, water biota, cultural, paleontologic, socioeconomic, human health, and waste management) and would have the highest beneficial socioeconomic impacts, compared to other site alternatives. After balancing the overall potential environmental impacts at the other candidate sites against LLNL, DOE concluded that none of the alternative candidate sites is environmentally preferable to LLNL for the NIF.

Atlas Facility. The environmentally preferable alternative is the No Action alternative. However, in the absence of underground nuclear testing, it is the Department's technical judgment that its ability to carry out its statutory mission responsibilities would be impaired without the capabilities that would be provided by the Atlas Facility. For this reason, the No Action alternative with regard to the Atlas Facility is not reasonable.

Because the Atlas Facility would rely upon existing facilities and special equipment already located at LANL, no additional site alternatives were analyzed. As discussed above, the single action alternative, to construct and operate the Atlas Facility at LANL TA–35, would result in negligible environmental impact.

1.B.4 Decision. National Ignition Facility. DOE's decision is to proceed with the construction and operation of the NIF (enhanced design option) at LLNL. Without the improved experimental capabilities offered by the NIF, DOE would lack the ability to evaluate significant weapon performance issues, which could adversely affect confidence in the nation's nuclear deterrent. Among the alternatives determined to be reasonable, construction and operation of the NIF at LLNL is environmentally preferable, the least cost and, due to LLNL's existing infrastructure for laser technology, the least technical risk.

Mitigation. The NIF mitigation measures appropriate to the LLNL site as identified in the PEIS (Appendix I, Paragraph I.4.7), will be formalized in a NIF Mitigation Action Plan. The plan will be issued by the DOE and monitored for compliance by its representatives during construction of the NIF. Mitigation measures appropriate to NIF operations will be incorporated in operating plans and procedures. A brief summary of the mitigation actions that will be taken follows.

Construction materials will be stored in temporary laydown areas. When construction is complete, a Reclamation Plan will be developed and actions taken to restore the construction material laydown areas to their original condition. To assure that the public is aware of the NIF construction activities the public will be informed, through the local news media, that elevated noise levels will occur for several months during construction of the NIF. Visual monitoring will be done to determine the effectiveness of conventional water-spraying dust control measures to assure that air quality standards are not exceeded. A Storm Water Pollution Prevention Plan will be developed and a Storm Water Permit will be obtained from the San Francisco Bay Region Water Quality Control Board for storm water discharges during construction. No more than 60 days before the start of construction, a special status species survey will be conducted for protected and sensitive biological resources within the NIF site and laydown areas, and mitigation actions taken as necessary. Exclusion or buffer zones will be established to avoid any sensitive locations. Appropriate mitigation measures will be implemented to avoid or minimize potential adverse impacts to protected and sensitive resources, such as state and federally-listed threatened and endangered species. Construction crews will be informed of any environmental concerns that exist and requested to avoid sensitive areas. An alternative construction entrance will be utilized to prevent traffic congestion during major construction activities such as major concrete pours.

For external combustion boilers, a permit will be obtained from the San Francisco Bay Area Air Quality Management District to comply with local area air quality standards. Hazardous materials will be inventoried and moved out of the area during flood conditions during NIF construction and operation. A Facility Safety Plan and Construction Safety Plan will be developed that will identify safety requirements for construction and operation of the NIF. A Waste Minimization Plan will be developed for the operational phase to evaluate the potential net reduction of hazardous, radioactive, and mixed waste streams. Other mitigation measures, identified in Sections I.4.7.2.4 and I.4.7.2.5 of Volume III of the PEIS, will be implemented to the extent practicable.

Atlas Facility. DOE's decision is to proceed with the construction and operation of the Atlas Facility at LANL's TA–35. Without improved experimental capabilities offered by the Atlas Facility, DOE would lack the ability to evaluate significant weapon performance issues, which could adversely affect confidence in the nation's nuclear deterrent. Among the alternatives determined to be reasonable, construction and operation of the Atlas Facility is environmentally preferable, the least cost, and the least technical risk.

Mitigation. The mitigation measures appropriate to the Atlas Facility construction and operation will be formalized in an Atlas Facility Mitigation Action Plan. The plan will be issued by the DOE and monitored for compliance by its representatives during construction and operation of the Atlas facility. There is a potential for public exposure to nonstatic magnetic fields from the Atlas Facility for short periods when operated. Monitoring at various locations around the Atlas Facility will be conducted to insure fields greater than 1 Gauss (a measure of electromagnetism) do not cause adverse impacts. Warning signs and other administrative controls, such as road closures, will be put in place prior to the operation of the Atlas Facility, as necessary.

1.C. Next Generation Experimental Facilities for Stockpile Stewardship

Related to the proposed actions for enhanced experimental facilities is the issue of next generation experimental facilities. In commenting on the Draft PEIS, some commentors suggested that potential next generation experimental facilities be analyzed as part of the proposed action. The Final PEIS

includes a discussion of potential next generation experimental facilities and the reasons why they are not proposed actions or alternatives (Section 3.3.4). These facilities, while contemplated on the basis of anticipated technical need, have not reached the stage of design maturity through research and development for DOE to include a decisionmaking analysis at this time.

However, the PEIS does describe, in general terms or by reference, what is known today about their potential environmental impacts. The environmental impacts from these facilities as contemplated today would not be significantly different from existing ''similar'' facilities. By characterizing the potential impacts in this way, the decisionmaker was aware of the potential program-level cumulative impacts of the next generation facilities when deciding whether to pursue a program of enhanced experimental capability. If DOE were to propose to construct and operate such next generation facilities in the future, appropriate NEPA review would be performed.

1.D. Transport and Storage of Plutonium-242

As a result of the Record of Decision for the Interim Management of Nuclear Materials at the Savannah River Site EIS (DOE/EIS–0220), existing plutonium-242 in nitrate solutions at H-Canyon at SRS will be stabilized by conversion to plutonium oxide in the HB-line. The plutonium-242 oxide would then be stored. The PEIS evaluates the need for plutonium-242 for stockpile stewardship activities and transport and storage of this material.

1.D.1 Alternatives. 1.D.1.1 No Action. Under the No Action alternative, the plutonium-242 material would remain at SRS and be stored in existing facilities at either the FB-Line or Building 235F.

1.D.1.2 Action Alternative 1—Store Plutonium-242 at the Los Alamos National Laboratory (LANL). Under this alternative, the plutonium-242 would be transported to LANL and stored in an existing plutonium facility.

1.D.1.3 Action Alternative 2—Store Plutonium-242 at the Lawrence Livermore National Laboratory (LLNL). Under this alternative, the plutonium-242 would be transported to LLNL and stored in Building 332.

1.D.2 Comparison of Alternatives. 1.D.2.1 Cost and Technical Factors. Transporting the plutonium-242 material would only require a fraction of one Safe, Secure Trailer shipment, and the costs are not significant. Because there is existing storage capacity at all three sites, the storage costs are comparable and not significant.

The programmatic need for shipment of this material is contained in a classified appendix to the Final PEIS. If the plutonium-242 material were not transported to LANL or LLNL, it could not be used for stockpile stewardship purposes.

1.D.2.2 Environmental Factors. The small quantity of plutonium-242 material is within the quantities of materials historically stored at all three sites. Regardless of the storage location for this material, there would be negligible environmental impacts. A high-bounding case analysis of the risk from the transport of this material (see Section 4.19 of the PEIS) indicates low risk for either LANL or LLNL.

1.D.3 Environmentally Preferable Alternative. For plutonium storage, the No Action alternative is the environmentally preferable alternative because there would be no potential impacts associated with transportation. However, the No Action alternative would not enable the plutonium-242 material to be used as needed for stockpile stewardship purposes, and is, therefore, not considered reasonable. For the action alternatives, storage at LANL is the environmentally preferable alternative because there is slightly less risk associated with transportation from SRS (due to the shorter distance from SRS).

1.D.4 Decision. DOE's decision is to transport the plutonium-242 material to LANL and store this material in an existing plutonium facility. LANL currently performs most of the plutonium activities for the Stockpile Stewardship and Management Program and has the necessary facilities for storing this material. LLNL, although a reasonable alternative, is currently reducing its inventory of plutonium.

2. Proposed Action (2)—Rightsizing the Industrial Base

With a reduced nuclear weapons stockpile, the capacity to manufacture nuclear weapons components and assemble or disassemble nuclear weapons can be reduced. For each required mission capability, the Department evaluated a No Action alternative, a downsize-in-place alternative, and an alternative that would transfer the mission to a weapons laboratory or to the Nevada Test Site (NTS). For pit component fabrication (a capability which no longer exists due to the closure of the Rocky Flats Plant in 1992), the Department evaluated reestablishing this capability, with an attendant small capacity, at Los Alamos National Laboratory (LANL) or the Savannah River Site (SRS), in addition to the No Action alternative (see Proposed Action 3).

2.A. Weapons Assembly/Disassembly

Weapons assembly/disassembly provides the capability to disassemble (dismantle) retired weapons, assemble nuclear and nonnuclear components into nuclear weapons, and perform weapons surveillance. In addition, this mission includes the capability to conduct nonintrusive modification pit reuse (external modifications to the pit) at the weapons assembly/disassembly facility. This mission also includes an option to store strategic reserves of nuclear components (pits and secondaries).

2.A.1 Alternatives. 2.A.1.1 No Action. Under the No Action alternative, this mission would continue at Pantex in current facilities, but Pantex would not develop the capability to perform nonintrusive modification pit reuse. Currently, nonintrusive modification pit reuse can only be performed at the plutonium research and development (R&D) facilities at LANL and LLNL.

2.A.1.2 Action Alternative 1—Downsize the Pantex Plant. This alternative would downsize and consolidate assembly/disassembly facilities and operations. Downsizing of the assembly/disassembly operation at Pantex would consist of an in-place decrease in facility footprint and relocation into modern existing facilities, mostly within Zone 12. No new construction would be required at Pantex; however, relocation and reinstallation of equipment would be required. The capabilities for nonintrusive modification pit reuse would be established in existing facilities within Zone 12. These facilities would also have the capability to support pit recertification and requalification operations.

2.A.1.3 Action Alternative 2—Relocate to the Nevada Test Site (NTS). This alternative is based on the use of the existing Device Assembly Facility and other plant infrastructure available at the NTS site that is required to maintain the capability for underground nuclear testing and experimentation. Because the Device Assembly Facility is not large enough to meet assembly/disassembly mission requirements, new construction would be required.

2.A.2 Comparison of Alternatives. 2.A.2.1 Cost and Technical Factors. Downsizing the Pantex Plant is the lower cost action alternative. Significant capital construction (about $250 million in 1995 dollars) would be required if the mission were relocated to NTS.

Downsizing Pantex presents less technical risk than relocation to NTS because of the need to relocate and requalify processes at NTS, the uncertainty in availability of key personnel, and the one year gap in operations that would be necessary while the transition occurred.

2.A.2.2 Environmental Factors. Downsizing the Pantex Plant would have a net positive effect on environmental impacts compared to the No Action alternative. No land would be disturbed, groundwater withdrawals would be reduced, and accident risks would also be less than the No Action alternative because of the consolidation of the facility footprint (smaller area) into Zone 12. Socioeconomic impacts at Pantex would result because of reductions in workload that will occur when the current weapons dismantlement backlog is eliminated in about three years. The additional socioeconomic impacts due to facility downsizing after this dismantlement is complete are relatively small.

Transferring the assembly/disassembly mission to NTS would entail upgrading and expanding the Device Assembly Facility. It is estimated that 18.5 additional acres would be disturbed. Although cultural and biotic resources are not expected to be impacted, the presence of a federally listed endangered species (the desert tortoise) at NTS would require a site survey to determine the potential for impacts. Water requirements to support the assembly/disassembly mission at NTS would amount to about 4 percent more than normal projected usage. Transferring the assembly/disassembly mission to NTS would create positive socioeconomic impacts at NTS, and significant negative socioeconomic impacts at Pantex.

Risks to worker health would be essentially the same at either location. Worker exposure to radiation is expected to be about equal for the NTS and the downsizing of Pantex alternatives. Radiation exposure to members of the public from normal operation would be well within regulatory limits at both sites. Although the remoteness of the NTS site yields a lower potential accident risk, the risk to the public from an accident at Pantex is very low. Relocation to NTS would also eliminate the risk associated with the transport of low level waste from Pantex to the NTS for disposal. These transportation risks, however, are very low.

2.A.3 Environmentally Preferable Alternative. The environmentally preferable alternative is to downsize existing capabilities at Pantex. No land would be disturbed, groundwater withdrawals would be reduced compared to usage under the No Action alternative, and accident risks would also be less than under the No Action alternative because of the consolidation of the facility footprint into Zone 12.

2.A.4 Decision. DOE's decision is to downsize the existing assembly/disassembly facilities presently located at the Pantex Plant. This is the environmentally preferable alternative, it exhibits the least technical risk, and is also the least-cost alternative.

2.B. High Explosives Fabrication

The high explosives fabrication mission includes capabilities required for manufacturing process development, formulation, synthesis, main charge manufacturing and energetic component manufacture. The high explosives fabrication mission also supports some high explosives surveillance and some stockpile stewardship activities.

2.B.1 Alternatives. 2.B.1.1 No Action. Under No Action, Pantex would continue fabrication and surveillance of high explosives components for nuclear weapons. Los Alamos National Laboratory (LANL) and Lawrence Livermore National Laboratory (LLNL) would continue to perform weapon high explosives research and development, some surveillance, and high explosives safety studies.

2.B.1.2 Action Alternative 1—Downsize at the Pantex Plant. This alternative would downsize and consolidate current high explosives operations and facilities at the Pantex Plant. Only minor modifications to existing facilities within Zones 11 and 12 would be required. This alternative would be considered only in conjunction with maintaining the weapons assembly/disassembly mission at Pantex.

2.B.1.3 Action Alternative 2—Relocate to the Los Alamos National Laboratory (LANL). This alternative would transfer high explosives operations from Pantex to LANL. This alternative would use existing LANL research and development facilities, which have sufficient capacity for high explosives requirements. There would be no new building construction and no significant modifications required.

2.B.1.4 Action Alternative 3—Relocate to the Lawrence Livermore National Laboratory (LLNL). This alternative would transfer high explosives operations from Pantex to LLNL, and would use existing LLNL research and development facilities. It would also require construction of one new facility for storage of high explosives at Site 300.

2.B.1.5 Action Alternative 4—Relocate to both the Los Alamos National Laboratory and the Lawrence Livermore National Laboratory. This option would involve splitting the high explosives mission between the two laboratories to protect core competencies at both. Since its impact is bounded by the previous two options, this option was not analyzed further in the PEIS.

2.B.2 Comparison of Alternatives. 2.B.2.1 Cost and Technical Factors. The costs to perform the high explosives mission are not large, and are comparable for all site alternatives. The current high explosives fabrication mission at Pantex costs about $17 million per year. The future high explosives fabrication mission will be relatively small, costing $2–3 million per year (assuming the selected site has other missions to absorb site overhead).

Since the U.S. does not have plans to develop new-design weapons, there is a concern that the laboratories will lose their core competencies in the area of high explosives technology. However, these competencies can be retained through greater teaming and integration of plant and laboratory capabilities and activities. This approach would attempt to protect core competence at the weapons laboratories in high explosives technology while retaining the overall fabrication mission at Pantex, the site with historical production experience.

2.B.2.2 Environmental Factors. Environmental impacts from facility modification and operation are comparable for all alternatives, and are less than current operations. However, relocation of the high explosives fabrication mission to LANL or LLNL would result in minor additional environmental impacts due to the increased level of operations at those sites compared to the No Action alternative, and the small construction required at LLNL (less than 2.5 acres). Socioeconomic impacts are relatively small for all alternatives. There are no radiological risks to workers or the public associated with the high explosives fabrication mission. Risks to neighboring populations from credible facility accidents would be small for all alternatives.

2.B.3 Environmentally Preferable Alternative. For high explosives fabrication, the environmentally preferable alternative is to downsize existing capabilities at the Pantex Plant. Environmental impacts under this alternative would be lower than under the No Action alternative.

2.B.4 Decision. DOE's decision is to downsize the existing high explosives fabrication facilities at the Pantex Plant.

This is the environmentally preferable alternative, the least-cost alternative and, when coupled with greater teaming and integration of plant and laboratory capabilities, has low technical risk. This decision is also consistent with Section 3140 of the National Defense Authorization Act for Fiscal Year 1997 (Pub. L. 104–201), which requires that the high explosives fabrication mission be performed at Pantex.

2.C. Secondary and Case Fabrication

The secondary and case fabrication mission includes activities to support fabrication, surveillance and inspection of secondaries and components. Functional capabilities for these services include operations to physically and chemically process, machine, inspect, assemble, and disassemble secondary and case materials. Materials include depleted uranium, enriched uranium, uranium alloys, isotopically enriched lithium hydride and lithium deuteride, and other materials.

2.C.1 Alternatives. 2.C.1.1 No Action. Under the No Action alternative, DOE would continue secondary and case fabrication at the Y–12 Plant at Oak Ridge. The Y–12 Plant would maintain the capability to produce and assemble secondaries, cases, and related nonnuclear weapon components.

2.C.1.2 Action Alternative 1—Downsize the Y–12 Plant at Oak Ridge. This alternative would downsize the existing secondary and case fabrication facilities at the Y–12 Plant at Oak Ridge. The downsized facilities would only require approximately 14 percent of the existing Y–12 Plant floor space, and no new facility construction would be needed to support the secondary and case fabrication mission. Modifications to the existing buildings would be required, both to implement the downsized mission and to upgrade the buildings to meet natural phenomena requirements (e.g., seismic events).

2.C.1.3 Action Alternative 2—Relocate to the Los Alamos National Laboratory (LANL). This alternative would transfer the secondary and case fabrication operations to 11 existing buildings at LANL using manufacturing processes proven at the Y–12 Plant. Modifications to the LANL facilities would be required to perform the secondary and case fabrication mission.

2.C.1.4 Action Alternative 3—Relocate to the Lawrence Livermore National Laboratory (LLNL). This alternative would transfer the secondary and case fabrication operations to existing buildings at LLNL using manufacturing processes proven at the Y–12 Plant. The secondary and case fabrication facilities at LLNL would principally involve modifications to six buildings.

2.C.2 Comparison of Alternatives. 2.C.2.1 Cost and Technical Factors. Downsizing the Y–12 Plant at Oak Ridge is the least-cost alternative because of significant facility modification costs (about $130 million at LANL and about $185 million at LLNL, both in 1995 dollars) that would be required if the mission were relocated. Downsizing the Y–12 Plant also presents less technical risk than relocation to the other sites because a production infrastructure for secondaries and cases currently exists at the Y–12 Plant and processes would not need to be relocated and requalified. In addition, downsizing the Y–12 Plant provides greater program flexibility by allowing some additional capacity to be maintained in a standby mode at minimal cost.

2.C.2.2 Environmental Factors. Downsizing the Y–12 Plant would not impact land, cultural or biotic resources. Downsizing would improve the efficiency of operations and significantly reduce natural resource requirements. Negative socioeconomic impacts associated with downsizing would be somewhat mitigated by positive socioeconomic impacts associated with the decontamination and decommissioning of facilities no longer required.

Transferring the secondary and case fabrication mission to either LANL or LLNL would have small positive socioeconomic impacts at those sites and a large negative socioeconomic impact at Oak Ridge due to the phaseout of this mission. For the relocation to LLNL alternative, a small area of land (less than one acre) would be disturbed, but impacts to cultural and biotic resources are not expected. Transfer of the secondary and case fabrication mission from Oak Ridge would entail small, one time impacts associated with moving the strategic reserve of highly enriched uranium to a new location.

Radiation exposure to workers is expected to be about equal for all three action alternatives and well within regulatory limits. Potential radiological impacts from accidents were determined to be about equal for Oak Ridge and LANL, and slightly higher for LLNL due to its closer proximity to populated areas.

2.C.3 Environmentally Preferable Alternative. For secondary and case manufacturing, the environmentally preferable alternative is to downsize the Y–12 Plant at Oak Ridge. Downsizing the Y–12 Plant would not impact land, cultural, or biotic resources. Downsizing would improve the efficiency of operations and significantly reduce natural resource requirements compared to the No Action alternative.

2.C.4 Decision. DOE's decision is to downsize the existing secondary and case fabrication facilities located at the Y–12 Plant at Oak Ridge. This is the environmentally preferable alternative, has the least technical risk, and is the least-cost alternative.

2.D. Nonnuclear Fabrication

Nonnuclear fabrication consists of the fabrication of electrical, electronic, electro-mechanical, and mechanical components (plastics, metals, composites), the assembly of arming, fuzing, and firing systems, and surveillance inspection and testing of nonnuclear components.

2.D.1 Alternatives. 2.D.1.1 No Action. The No Action alternative would maintain these activities at their present location at the Kansas City Plant (KCP), Sandia National Laboratories (SNL), and Los Alamos National Laboratory (LANL). KCP manufactures nonnuclear weapon components and conducts surveillance testing on them. SNL conducts system engineering of nuclear weapons, designs and develops nonnuclear components, conducts field and laboratory nonnuclear testing, manufactures some nonnuclear weapons components, and provides safety and reliability assessments of the stockpile. LANL also manufactures a few nonnuclear weapons components and conducts surveillance on certain nonnuclear weapons components.

2.D.1.2 Action Alternative 1—Downsize the Kansas City Plant (KCP). The downsized nonnuclear fabrication alternative consists of three major factory segments designed around electronics, mechanical, and engineered materials product lines, procuring some components from outside sources, and reducing the KCP facility area. This alternative consists of downsizing and consolidating existing facilities and would require facility modification but no new construction.

2.D.1.3 Action Alternative 2—Relocate to the Los Alamos National Laboratory (LANL), Lawrence Livermore National Laboratory (LLNL), and Sandia National Laboratories (SNL). This alternative would use the existing expertise, capability, and infrastructure at LANL, LLNL, and SNL to satisfy fabrication requirements for nonnuclear components. This alternative would transfer the majority of current KCP missions to SNL, except for nuclear system plastic components, which would go either to LANL or LLNL, and high energy detonator inert components,

which would go to LANL. In addition, there is an option of moving the reservoir mission to either SNL or LANL. This alternative would require construction of a new stand-alone production site at SNL, consisting of six new buildings and renovations or minor modifications to some existing buildings.

2.D.2 Comparison of Alternatives. 2.D.2.1 Cost and Technical Factors. Because of significant facility construction or modification costs to relocate the mission (about $235 million in 1995 dollars), downsizing the KCP is the least-cost alternative. Downsizing KCP also presents significantly less technical risk than relocation to the other sites, because a production infrastructure for nonnuclear components currently exists and processes would not need to be relocated and requalified.

2.D.2.2 Environmental Comparison. For the alternative that would downsize KCP, the construction activities would involve internal modifications to the existing facility. No land would be disturbed. For the alternative that would transfer the KCP mission to the laboratories, construction impacts would involve internal facility modifications at LANL and LLNL. At SNL, approximately 22 acres of land would be disturbed to construct new facilities. This represents 6 percent of the undisturbed land at SNL. Potential impacts to cultural and biotic resources could occur.

There are minimal air impacts for both alternatives. Water requirements for a downsized facility at KCP would be reduced 31 percent compared to No Action. For the alternative that would transfer the mission to the laboratories, groundwater use would increase by less than 1 percent over No Action usage at LANL and LLNL, but would increase by 64 percent over No Action usage at SNL. This would still represent only 29 percent of the groundwater rights and thus, no adverse impacts are expected. Transferring the nonnuclear mission to the laboratories would have small positive socioeconomic impacts at those sites, and a large negative socioeconomic impact at KCP due to the phaseout of this mission.

There are no radiological risks to workers or the public associated with the nonnuclear fabrication mission, and there are no significant adverse impacts associated with normal operations. Accident profiles at the sites would not change as a result of downsizing at KCP or transferring the nonnuclear fabrication mission to the laboratories. Risks to neighboring populations from credible facility accidents would be small for all alternatives. All three sites have adequate existing waste management facilities to treat, store, and dispose of wastes that would be generated by this mission.

2.D.3 Environmentally Preferable Alternative. The environmentally preferable alternative is to downsize existing facilities at the KCP. The relocation of this mission to SNL, LANL or LLNL would entail additional environmental impacts associated with the construction and operation of new facilities.

2.D.4 Decision. DOE's decision is to downsize the existing facilities at the KCP. This is the environmentally preferable alternative, it exhibits the least technical risk, and is also the least-cost alternative.

3. Proposed Action (3)—Reestablishing Manufacturing Capability and Capacity for Pit Components

This capability, hereafter referred to as pit fabrication, includes all activities necessary to fabricate new pits, to modify the internal features of existing pits (intrusive modification), and to recertify or requalify pits.

3.A.1 Alternatives. 3.A.1.1 No Action. Under the No Action alternative, DOE would continue to use existing capabilities at the Los Alamos National Laboratory (LANL) and the Lawrence Livermore National Laboratory (LLNL). LANL maintains a limited capability to fabricate plutonium components using its plutonium research and development facility, and performs surveillance to provide safety and reliability assessments of the stockpile. In addition, less extensive capabilities would continue at LLNL to support material and process technology development.

3.A.1.2 Action Alternative 1—Reestablish Capability at the Los Alamos National Laboratory (LANL). This alternative would reconfigure the plutonium facility at LANL to fulfill the pit fabrication mission. This alternative would locate pit manufacturing in existing facilities. Existing equipment would be retained as much as possible, but some equipment would need to be upgraded.

3.A.1.3 Action Alternative 2—Reestablish Capability at the Savannah River Site (SRS). This alternative would establish a pit fabrication facility at SRS within existing facilities, but with new equipment and systems. Facilities are available at the SRS, in F-Area and H-Area, which could house all the process functions required for the manufacture of plutonium pits. New equipment and systems would be required for the pit fabrication facility.

3.A.2 Comparison of Alternatives. 3.A.2.1 Cost and Technical Factors Technical risk associated with each alternative was assessed by comparing the relative experience of each site in the pertinent production capability areas. No pits are currently being produced for the nuclear weapon stockpile, and neither site has done so in the recent past. However, LANL has recently provided pits for nuclear explosive testing, and is currently producing plutonium-238 heat sources for National Aeronautics and Space Administration (NASA) programs. Also, LANL continues to perform pit surveillance and technology development activities directly related to the required capabilities for pit fabrication.

SRS is currently processing and shipping plutonium-238 to LANL to support fabrication of NASA heat sources. Although SRS has a health, safety, and security infrastructure for plutonium operations, the historical mission for the site was separation and production of plutonium metal for shipment to other sites for weapons program use. Consequently, SRS has no experience with the kinds of capabilities required for precision nuclear component manufacturing and the ancillary supporting functions.

The required workload for the fabrication of new replacement pits is small. DOE foresees only the replacement of pits destroyed in routine surveillance testing unless a near-term, life-limiting phenomenon is discovered in stockpile pits. Historical pit surveillance data and pit life studies do not predict a near-term problem. However, data are limited for weapons older than 25 years, and for the youngest weapons in the stockpile.

The technological capability to manufacture all of the pit designs in the enduring stockpile provides an inherent capacity to manufacture about 50 pits per year in single shift operations. During weapon refurbishment to replace other components, DOE expects most pits to be requalified and reused. About 20 pits per year are expected to be required to replace pits destroyed in routine surveillance testing. A capacity of about 50 pits per year is, therefore, judged to be sufficient for the next 10 or more years.

The construction costs for providing such a limited pit fabrication capacity are less at LANL (about $310 million in 1995 dollars) than at SRS (about $490 million in 1995 dollars). This is largely because the capability would be additive to existing capabilities at LANL

while a completely new stand-alone capability would be required at SRS. Both estimates include the costs of planned refurbishment of the LANL plutonium facility for its ongoing pit surveillance and stockpile stewardship missions. In addition, annual operating costs would be considerably less at LANL (about $30 million versus $60 million at SRS) because the mission would be additive to other existing missions and would not have to carry all facility overhead costs.

The technical risk at LANL would be less, due to the existing experience base for stockpile stewardship and pit surveillance missions. The LANL capability would also be in place at least two years earlier than the SRS alternative.

In reestablishing plutonium pit fabrication capability, DOE considered establishing a larger fabrication capacity more in line with the capacity planned for other manufacturing functions. Larger capacity was rejected, however, because of the small current demand for the fabrication of replacement pits, and the significant, but currently undefined, time period before additional capacity may be needed.

3.A.2.2 Environmental Factors—Upgrades to existing facilities would be required for each alternative, and no new land would be disturbed. During operations, both alternatives would utilize similar facilities, procedures, and natural resources. Therefore, both alternatives would result in similar operational environmental impacts for most natural resource areas. Impacts to air quality would be minimal and well within established standards. At SRS, water requirements would be provided from surface water, which is plentiful, and no adverse impacts would be expected. At LANL, groundwater would be used. Water requirements for this mission, which would be less than 1 percent of projected No Action usage, could be adequately met without exceeding the groundwater allotment at LANL.

Socioeconomic impacts are comparable for either alternative, although SRS would require more additional new workers. Worker exposure to radiation would be larger at SRS due to the larger added workforce, but within regulatory limits for both alternatives. Both sites have adequate existing waste management facilities to treat, store, and dispose of wastes that would be generated by the pit fabrication mission. Risks to neighboring populations from normal operations or credible facility accidents would be small for both alternatives.

3.A.3 Environmentally Preferable Alternative. For pit manufacturing, the No Action alternative is the environmentally preferable alternative. Under the No Action alternative, no new construction would be required, and the Department would continue with the existing pit research and development capability at LANL and LLNL. However, DOE would not have the capability to replace the pit component in stockpile weapons if necessary, nor protect against stockpile attrition through surveillance testing. Thus, No Action is not a reasonable alternative.

Of the two action alternatives, which would reestablish pit manufacturing capabilities at either LANL or SRS, LANL is the environmentally preferable alternative. Although overall environmental impacts are projected to be similar between the two sites, LANL was judged to be preferable due to the fact that the radiological risks to workers during normal operations are projected to be less than at SRS.

3.A.4 Decision. DOE's decision is to reestablish the pit fabrication capability, at a small capacity, at LANL. This is the environmentally preferable alternative, it exhibits the least technical risk, and is also the least-cost alternative. This decision limits the plutonium fabrication facility plans to a facility sized to meet expected programmatic requirements over the next ten or more years. It is not sized to have sufficient capacity to remanufacture new plutonium pits at the same production rate as that of their original manufacture. DOE will perform development and demonstration work at its operating plutonium facilities over the next several years to study alternative facility concepts for larger capacity. Environmental analysis of this larger capacity has not been performed at this time because of the uncertainty in the need for such capacity and the uncertainty in the facility technology that would be utilized. Should a larger pit fabrication capacity be required in the future, appropriate environmental and siting analysis would be performed at that time.

Mitigation. Specific mitigation measures are not addressed for the stockpile management decisions of this ROD, although many potential mitigation measures are identified in the PEIS. In accordance with the Stockpile Stewardship and Management Program's two-tiered NEPA Strategy, these specific mitigation measures will be addressed, as necessary, on a site-by-site basis, in any site-specific NEPA analyses needed to implement the stockpile management decisions of this ROD.

Strategic Reserve Storage

The PEIS also evaluates storage alternatives for strategic reserve material (plutonium and highly enriched uranium that has not been declared surplus to national security needs). However, a decision on storage of strategic reserve materials will be made later in the Record of Decision on the Final PEIS for the Storage and Disposition of Weapons-Usable Fissile Materials in conjunction with decisions on the storage of surplus materials. The preferred alternatives for strategic reserve storage described in both the Final PEIS for Stockpile Stewardship and Management and the Final PEIS for the Storage and Disposition of Weapons-Usable Fissile Materials are consistent. The preferred alternatives are: (1) Highly enriched uranium strategic reserve storage at Y–12; and (2) plutonium pit strategic reserve storage in Zone 12 at Pantex.

Other Considerations

DOE has considered a wide range of views on alternatives for the Stockpile Stewardship and Management Program. However, it is national security policy, as established by the President and Congress, that must define the complex balance between U.S. national security policy objectives for nuclear deterrence, arms control and nonproliferation.

Chapter 2 of the PEIS describes the national security policy framework that defines the purpose and need for DOE's nuclear weapons mission for the foreseeable future. That chapter also describes the development of proposed actions and reasonable alternatives in response to recent changes in national security policy, and puts those changes in a broad technical perspective. Successive levels of technical detail are provided in Volume I, Chapter 3 and Volumes II and III of the PEIS. The discussions that follow refer to the appropriate sections of the PEIS to avoid unnecessary repetition.

While the terms ''stockpile stewardship'' and ''stockpile management'' are relatively new, the Program is not new when considered in terms of its substructure capabilities. What the terms are meant to convey is a post-Cold War change in Program focus away from large-scale development and production of new-design nuclear weapons with nuclear testing, to one that focuses on the safety and reliability of a smaller, aging stockpile without nuclear testing. Even with this change in focus, however, national security policies require DOE

to maintain the historical capabilities of the ongoing Program. The actions selected in this Record of Decision flow logically from the mission purpose and need, given the policy constraints placed on the Program by the President and Congress. Enhanced experimental capability (represented by the National Ignition Facility, Contained Firing Facility, and Atlas Facility) is needed because, in the absence of nuclear testing, it will provide the surrogate source of experimental data that are needed to continually assess and certify a safe and reliable stockpile. Rightsized manufacturing capacities at the Y–12 Plant (Oak Ridge), the Kansas City Plant, and Pantex will most efficiently conform to the reduced requirements of a smaller, aging stockpile in the absence of new-design weapon production. A reestablished pit manufacturing capability at LANL will restore a required capability of the Program that was temporarily lost as a consequence of the closure of the Rocky Flats Plant.

The question of alternatives for the Stockpile Stewardship and Management Program is complex because maintaining a nuclear weapons stockpile, whatever its size, requires a complete integrated set of technical capabilities as well as an appropriately sized manufacturing capacity. The technical capabilities are generally characterized as research, design, development, and testing; reliability assessment and certification; and manufacturing and surveillance operations (Section 2.2 and Figure 2.7–2 of the PEIS). From a technical point of view, none of these capabilities can be deleted if DOE is to maintain a safe and reliable stockpile (Section 2.4 of the PEIS). Indeed, DOE has been directed by the President and Congress to maintain these capabilities (Section 2.4 of the PEIS).

Commentors on the PEIS questioned the different treatment of stewardship and management alternatives, mainly the lack of programmatic alternatives to science based stockpile stewardship. Stewardship and management alternatives were treated differently in the PEIS because they address fundamentally different problems. Stockpile stewardship capabilities form the basis of DOE's judgments about the safety, reliability, and performance of U.S. nuclear weapons and, in a larger context, U.S. judgments about the nuclear weapons capabilities of others (Section 2.4.1 of the PEIS). DOE did not consider it reasonable to propose stewardship alternatives that would diminish, rather than enhance, stewardship capabilities, particularly given the fact that historic confidence in the safety and performance of the stockpile was derived from the nuclear testing that is no longer part of the ongoing stewardship program. National security policy requires DOE to maintain, and in some areas enhance, the stewardship capabilities of the three weapons laboratories and NTS (Section 2.2 of the PEIS). The PEIS explains the basis for this conclusion in a technical context, including the need for two independent nuclear design laboratories (Section 2.4.1 of the PEIS). Therefore, the PEIS did not propose any actions that would otherwise diminish ongoing stewardship missions.

In the PEIS, the Department determined that there is only one reasonable programmatic alternative for stockpile stewardship: enhanced experimental capability (see Section 3.1.2). This determination is consistent with a previous review made in November 1994 by the JASON Committee, a group of independent experts who evaluated the Science-Based Stockpile Stewardship (SBSS) program. The JASON Committee concluded that ''[a] strong SBSS program, such as we recommend in this report, is an essential component for the U.S. to maintain confidence in the performance of a safe and reliable nuclear deterrent under a comprehensive test ban.'' The JASON Committee further concluded that ''[in] the absence of nuclear weapons testing, improved understanding of the warheads and their behavior over time will be derived from computer simulations and analyses benchmarked against past data and new, more comprehensive diagnostic information obtained from carefully designed laboratory experiments. Toward this goal, the SBSS calls for the construction of a number of experimental facilities which have applications both in basic scientific research and in research directed towards strengthening the underlying scientific understanding in the weapons program.''

Section 3.1.2.4 of the PEIS discussed four possible programmatic stewardship alternatives to enhanced experimental capability and concluded that none of them were reasonable stand-alone alternatives. These included: denuclearization (eliminate nuclear weapons in the relative near term); restoration (continue to rely on underground nuclear testing); remanufacturing (reproduce exact replicas of proven designs); and maintenance (rely on enhanced surveillance and revalidation to detect and correct problems). Both denuclearization and restoration are inconsistent with United States national security policy. Furthermore, while remanufacturing and maintenance already are, and will continue to be key components of the Program, neither would provide sufficient technical assurance that problems that may arise in the stockpile will be effectively diagnosed and corrected.

Prior to the issuance of the Final PEIS, some commentors expressed concern that the Department had not considered other programmatic alternatives for stockpile stewardship (i.e., remanufacturing). In response to their concerns, the Department asked Dr. Sidney D. Drell, of the JASON Committee, to review the issue of remanufacturing as a reasonable alternative to enhanced experimental capabilities.

In an October 28, 1996, letter to the Secretary of Energy, Dr. Drell and another member of the JASON Committee, Dr. Richard L. Garwin, stated that ''we must not only maintain a cadre of first-class weapon scientists and engineers. We must also expand the existing science based understanding of the stockpile. The existing S&T [Science and Technology] base, including existing above-ground experimental facilities, is not adequate to the task of stewardship over the long term for an aging deterrent in the absence of nuclear tests. These requirements cannot be met if the SSMP [Stockpile Stewardship and Management Program] as planned by the Department of Energy is replaced simply by a program of remanufacturing or refurbishing existing weapons without paying careful attention to the need of maintaining weapons design capability, expanding our science based understanding of the stockpile, and providing the sources of experimental data needed to validate enhanced computer simulations.'' They concluded that ''[w]hile remanufacturing is a necessary component of SSMP, it is not a reasonable alternative to the pursuit of a science-based stockpile stewardship or the need for enhanced experimental capability.''

National security policy also requires DOE to maintain a full complement of stockpile management capabilities and appropriate manufacturing capacity, albeit for a smaller post-Cold War stockpile. Unlike stockpile stewardship capabilities, a smaller stockpile does permit some reasonable siting alternatives for stockpile management capabilities and capacities to accomplish the mission purpose and need within the current national security policy framework (Section 2.4.2 of the PEIS).

One important consideration in developing the PEIS was the possibility

that future international treaties may lead to a smaller U.S. stockpile, i.e., less than the currently defined START II protocol-sized stockpile. The PEIS analyzed each of the two stockpile sizes currently defined and directed by national security policy, a START I Treaty stockpile (6000 accountable strategic weapons) and a START II protocol-sized stockpile (3500 accountable strategic weapons). In addition, the PEIS analyzed a hypothetical 1,000-weapon stockpile for the purpose of providing a sensitivity analysis for decisions on manufacturing capacity. The Nuclear Weapons Stockpile Memorandum (NWSM) process that specifies the types of weapons and quantities of each weapon type in the stockpile is described in Section 1.1 of the PEIS. The classified NWSM is developed based on Department of Defense force structure requirements necessary to maintain nuclear deterrence and comply with existing arms control treaties while pursuing further arms control reductions. The PEIS describes this complex process, and explains why DOE does not believe it reasonable to speculate on additional stockpile sizes, which would necessarily entail the use of a large number of arbitrary assumptions (Section 2.2 of the PEIS). Nevertheless, DOE has considered the possibility that future national security policy could define a path to a smaller stockpile. Therefore, the analysis in the PEIS is very flexible in its approach to potential changes in stockpile size.

It is important to note in this regard that, just as stockpile stewardship capabilities are currently viewed by the United States as furthering U.S. nonproliferation objectives by making the ''zero-yield'' Comprehensive Test Ban Treaty feasible, it is reasonable to assume that confidence in U.S. stewardship capabilities would remain as important, if not more important, in future negotiations to reduce the stockpile further. The path to even a very small (tens or hundreds of weapons) or a zero stockpile would require the negotiation of complex international treaties, most likely with provisions that require intrusive international verification inspections of nuclear weapons-related facilities. Therefore, DOE believes it reasonable to assume that complex treaty negotiations, when coupled with complex implementation provisions, could possibly stretch over several decades. On such a gradual path to a very small or zero stockpile, stockpile size alone would not change the purpose and need, proposed actions, or alternatives in the PEIS as they relate to stewardship capabilities. The issues of maintaining the core competencies of the United States in nuclear weapons, and the technical problems of a smaller, aging stockpile in the absence of nuclear testing, would remain the same.

With regard to stockpile management capability and capacity, the PEIS evaluates reasonable approaches for a gradual path to a very small or zero stockpile. At some point on this path, further downsizing of existing industrial plants or the alternative of consolidating manufacturing functions at stewardship sites would become more attractive as manufacturing capacity becomes a less important consideration. In the near term, however, the decisions to downsize the existing industrial plants would still be reasonable because the projected downsizing investment would be recouped within a few years through reduced operating expense, and downsizing in the near term is consistent with potential longer-term decisions regarding plant closures. With regard to reestablishing pit manufacturing capability, DOE does not intend to establish a greater manufacturing capacity than is inherent in reestablishing the basic manufacturing capability. Thus, on a gradual path to a very small or zero stockpile, stockpile size alone would not change the purpose and need, proposed actions, or alternatives in the PEIS with regard to stockpile management capabilities and capacities.

Conclusions

With the issuance of this Record of Decision, the Department is making the decisions necessary to: (1) construct and operate three enhanced experimental facilities (the National Ignition Facility at LLNL, the Contained Firing Facility at LLNL, and the Atlas Facility at LANL); (2) downsize the existing weapons industrial plants (Y–12 at Oak Ridge, the Kansas City Plant, and Pantex); and (3) reestablish the plutonium pit component manufacturing capability at LANL. Additionally, the Department has decided to transfer a small amount of plutonium-242 material from SRS to LANL for stockpile stewardship activities.

During the 30 day period following the Environmental Protection Agency's notice that the Final PEIS had been filed, the Department received four letters from government organizations in response to the Final PEIS. Two of the letters, from the Tennessee Historical Commission and the State of Missouri Office of Administration, expressed no objection or comment. A third letter, from the Environmental Protection Agency, indicated that the Agency's prior comments on the Draft PEIS had been adequately addressed in the Final PEIS, and that the Agency had no objections to the project as proposed. The fourth letter, from the New Mexico Environmental Department, provided comments on the nomenclature used to describe water resources in and around the Los Alamos National Laboratory. These comments do not change the analysis in the PEIS, but they have been considered in preparing this Record of Decision. In making these decisions, all practicable means to avoid or minimize environmental harm from the alternatives selected have been adopted.

These decisions will help enable the Department to assess and certify the safety and reliability of the nation's nuclear weapons stockpile, while also supporting a zero-yield Comprehensive Test Ban Treaty. These decisions will allow for the closing and ultimate remediation of unnecessary industrial facilities, and reduce the cost of existing manufacturing operations. These decisions reestablish the required national security capability of plutonium pit fabrication. These decisions are consistent with, and supportive of, national security policy requirements established by the President and Congress for nuclear deterrence, arms control, and nonproliferation, including the safeguards established for U.S. entry into the Comprehensive Test Ban Treaty. Finally, these decisions will help enable the Department to maintain the core intellectual and technical competencies of the United States in nuclear weapons, and maintain a safe and reliable nuclear weapons stockpile.

Issued in Washington DC, December 19, 1996.

Hazel R. O'Leary,

Secretary.

[FR Doc. 96–32759 Filed 12–24–96; 8:45 am]

BILLING CODE 6450–01–P

Office of Energy Research

Joint Program on Terrestrial Ecology and Global Change Notice 97–02

AGENCY: Department of Energy (DOE), National Science Foundation (NSF), National Aeronautics and Space Administration (NASA), U.S. Department of Agriculture (USDA), Environmental Protection Agency (EPA).

ACTION: Notice inviting grant applications.

SUMMARY: In concert with the U.S. Global Change Research Program

(USGCRP) and with the intent of enhancing interagency collaboration, the Department of Energy (DOE), the National Science Foundation (NSF), the National Aeronautics and Space Administration (NASA), the United States Department of Agriculture (USDA), and the Environmental Protection Agency (EPA) announce their interest in receiving applications for support of grants that seek to augment research on terrestrial ecology as it relates to global environmental changes. This request for applications encourages multi-disciplinary applications involving companion experimental/manipulative and modeling efforts to provide critically needed data and information for improved predictions of global change phenomena in three equally important areas: (1) the consequences of global-scale environmental changes on terrestrial ecosystems, (2) the role of terrestrial ecosystems as a source or sink of carbon dioxide and other trace gases, and (3) the interactions and feedback between terrestrial ecosystems and the atmosphere and between linked ecosystems at watershed and landscape scales.

This request for applications extends the research begun as a result of the first two Terrestrial Ecology and Global Change (TECO) competitions in FY 1995 and FY 1996. It also extends current USGCRP activities supported by the five participating agencies that are relevant to this notice. These activities include the NSF Ecological Rates of Change (EROC), Water, Energy, Atmosphere, Vegetation and Earth (WEAVE), Land Margin Ecosystem Research (LMER), and Ecological Diversity (ED), the DOE Program on Ecosystem Research (PER), Terrestrial Carbon Processes (TCP), and the National Institute for Global Environmental Change (NIGEC), the NASA programs on Terrestrial Ecology and Land Cover and Land Use Change, the USDA programs on Forest/Range/Crop/Aquatic Ecosystems, Soils and Soil Biology, and Plant Responses to the Environment (PRE), and the EPA program on Regional Ecological Vulnerabilities to Climate Change.

Applications submitted in response to this interagency announcement are to be submitted to DOE. Each agency supporting an award, however, will act as the sole administrative unit for that award. All successful awards will be identified with the joint effort. The participating agencies will jointly manage the TECO program throughout the entire phase from the receipt and review of applications until the close-out of awards.

It is expected that 15–18 awards up to 3 years in duration and not exceeding $500,000 per year will be issued subject to the availability of FY 1997 funds. Applications submitted under this notice will be managed, prior to award selection decisions, in accordance with the DOE Office of Energy Research's (ER's) Financial Assistance Program Regulation 10 CFR Part 605 as published in the Federal Register September 3, 1992, (57 FR 40582).

DATES: Submission of an original and 18 copies of each application must be received no later than 4:30 p.m. E.S.T., February 28, 1997, in order to be accepted under this notice and to permit timely consideration for award by the participating agencies during FY 1997.

ADDRESSES: Formal applications referencing Program Notice 97–02 on the cover page must be sent to: U.S. Department of Energy, Office of Energy Research, Grants and Contracts Division, ER–64, 19901 Germantown Road, Germantown, MD 20874–1290, Attn: Program Notice 97–02. The above address for formal applications must also be used when submitting formal applications by U.S. Postal Service Express Mail, any commercial mail delivery service, or when hand carried by the applicant.

FOR FURTHER INFORMATION CONTACT: Dr. Jerry Elwood, Office of Energy Research, U.S. Department of Energy, Office of Health and Environmental Research, ER–74, 19901 Germantown Road, Germantown, MD 20874–1290, telephone: (301) 903–4583, E-mail: jerry.elwood@oer.doe.gov; Dr. Roger Dahlman, Office of Energy Research, Office of Health and Environmental Research, ER–74, 19901 Germantown Rd., Germantown, MD 20874–1290, telephone: (301) 903–4951, E-mail: roger.dahlman@oer.doe.gov; Dr. Scott Collins, Division of Environmental Biology, Room 635 National Science Foundation, 4201 Wilson Blvd., Arlington, VA 22230, telephone: (703) 306–1479, E-mail: scollins@nsf.gov; Dr. Andy Phillips, Division of Integrative Biology and Neuroscience, Room 685, National Science Foundation, 4201 Wilson Blvd. Arlington, VA 22230, telephone: (703) 306–1421, E-mail: jphillip@nsf.gov; Dr. Diane E. Wickland, Terrestrial Ecology Program, Office of Mission to Planet Earth, National Aeronautics and Space Administration, Washington, D.C. 20546, telephone: (202) 358–0245, E-mail: Diame.Wickland@hq.nasa.gov; Dr. Anthony C. Janetos, Land Cover and Land Use Change Program, Office of Mission to Planet Earth, National Aeronautics and Space Administration, Washington, D.C. 20546, telephone: (202) 358–0276, E-mail: Anthony.Janetos@hq.nasa.gov; Dr. Timothy C. Strickland, National Research Initiative Competitive Grants Program, U.S. Department of Agriculture, Ag Box 2241, Washington, D.C. 20250–2241, telephone: (202) 401–4082, E-mail: tstrickland@reeusda.gov; Ms. Barbara M. Levinson, Office of Research and Development, Environmental Protection Agency, 401 M Street, N.W., Mail Code 8723, Washington, D.C. 20460, telephone: (202) 260–5983, E-mail: Levinson.barbara@epamail.epa.gov; Dr. Robert Menzer, Office of Research and Development, Environmental Protection Agency, 401 M Street, S.W., Washington, D.C. 20460, telephone: (202) 260–5779, E-mail: menzer.robert@epamail.epa.gov

SUPPLEMENTARY INFORMATION: In concert with the U.S. Global Change Research Program (USGCRP) and with the intent of enhancing interagency collaboration, the National Science Foundation (NSF), the Department of Energy (DOE) , the National Aeronautics and Space Administration (NASA), the United States Department of Agriculture (USDA), and the Environmental Protection Agency (EPA) seek to augment terrestrial ecological research with this special competition. This competition will allow more comprehensive research on the combined response of terrestrial ecosystems to global-scale environmental changes that are occurring or are expected to occur and the influence of terrestrial ecosystems on environmental phenomena.

In recent decades, extensive efforts have been made to characterize and monitor the distribution and state of terrestrial ecosystems. Various global-scale environmental changes that are known or have the potential to affect terrestrial ecosystems have already been documented (e.g., increasing atmospheric CO_2 and other trace gases, global average increase in temperature, decreasing stratospheric ozone and increases in tropospheric ozone, and land transformations, including changes in land cover and land use). Some of these changes are expected to continue, if not increase due to continuing human activities. Other potential global-scale environmental changes could occur in the future due directly or indirectly to human activities (e.g., altered precipitation patterns, increased severity and frequency of extreme events related to climate change). Presently, what is lacking is an understanding of the potential

combined effects of global-scale environmental changes on essential ecosystem components, functions, and processes, particularly the effects of multiple and interacting environmental changes such as changes in climate and atmospheric composition and land transformations that are outside the range normally experienced by terrestrial ecosystems. There are also significant uncertainties regarding the role of terrestrial ecosystems in affecting global-scale changes and how natural and human-induced changes in terrestrial ecosystems may influence global phenomena. It is unclear from existing information how the essential functions of species or ecosystems are being or will be affected by global environmental changes in the future, on scales from individual organisms to populations, communities, ecosystems, landscapes and subcontinental regions. Without the ability to make such projections, implications for the sustainability of ecosystems as a support system for humans remain uncertain.

The goal for this research is to improve the scientific understanding of how species, ecological characteristics and processes, and ecosystems effect and are affected by global change over a range of time scales. To enhance capabilities to assess the probable consequences of multiple influences (e.g., concurrent changes in climate, atmospheric composition, land transformations/land use) and their feedback effects. The research also will increase the capability for extending experimentally-derived information obtained at smaller geographical scales (e.g., plot-size, stand-level, patch-size) and shorter time frames (e.g., growing seasons) to landscape and larger scales (e.g., regions, river basins) at longer temporal intervals (e.g., decades, centuries).

To achieve this scientific understanding, innovative field experiments and observational studies are needed to address interactions of ecological processes and combinations of effects related to global change; to relate observed effects to causative factors; and to test predictive response models. Also, to improve predictability, new modeling efforts will be needed for extrapolating information to other systems and across multiple scales that will contribute to the development of regional and subcontinental models and ecological models that are fully interactive with other Earth system models (e.g., Dynamic Global Vegetation Models). Agencies involved in this interagency announcement encourage multi-disciplinary applications involving companion experimental, manipulative and modeling efforts to provide critically needed data and understanding for improved predictions of global change phenomena in the following, equally important areas:

(1) Consequences of Global Change on Ecosystems.

The goal of research in this area is to provide a stronger scientific basis for understanding, predicting, and assessing the effects of human-induced and natural influences on terrestrial ecosystems, including aquatic ecosystems imbedded within terrestrial ecosystems (e.g., streams, lakes, wetlands). It is hypothesized that ecosystems are changing or will change in response to climate and land use changes of the past century and predicted future changes due to the enhanced greenhouse effect and increasing demands on land for food, fiber, and other human uses. Understanding the consequences of these and other global-scale changes on terrestrial ecosystems, organisms, and resources presents unprecedented challenges because many other types of change are occurring simultaneously. There is a need to understand how existing terrestrial ecosystems are likely to respond to ongoing or predicted environmental changes, and to relate observed changes to likely causes using experimental approaches that examine phenomena at multiple scales. There is also a need to consider the adaptive potential of terrestrial ecosystems to environmental changes and to incorporate the influence of ongoing adaptive changes through time. Also, the research needs to provide the quantitative information for models that generalize from selected study sites to broader areas at local, regional and global levels at multiple temporal scales.

The focus of research on consequences should be on improving the scientific understanding of how the structure and function of terrestrial ecosystems will respond to global change, including changes in land use and land cover, climate, and atmospheric composition. The research should improve the scientific basis for assessing the vulnerability of different ecosystems to global changes, including the potential beneficial and adverse effects of such changes on ecosystem components and processes of utilitarian and/or intrinsic value to humans. This capability should also include projecting potential ecological effects of future environments that many ecological communities may not yet have experienced, and the potential role of natural selection in driving these changes. Experimental and modeling research is encouraged:

* To understand and predict how ecosystem processes (e.g., net primary production, respiration, net ecosystem productivity) are affected by combinations of altered atmospheric CO_2 and other trace gas concentrations (e.g., ozone), different climate conditions, changing resource constraints (e.g., nutrients, water and light), and changing land-use patterns (e.g., urban/suburban sprawl, conversion of forest to other uses);
* To identify and quantify the mechanism(s) or process(es) controlling observed responses to altered climatic and atmospheric conditions and altered land cover or land use, and to understand both the potential for these mechanisms and processes to undergo adaptation to the changes through physiological adaptations and natural selection, and the consequences of adaptive responses and evolutionary changes on ecosystem function;
* To investigate trends, patterns, and relationships among vegetation, climate, and land use to document and understand the interaction between natural and human-dominated systems;
* To determine how biological and ecological responses to global-scale environmental changes are manifested at higher levels of ecosystem hierarchy (populations, communities, ecosystem, landscape) of terrestrial environments;
* To identify changes in structural components (e.g., landscape pattern, community structure, architectural properties of vegetation), caused by different atmospheric, climatic, and land-use activities that will predict the future structure and distribution of ecosystems;
* To understand and predict the effects of combinations of altered CO_2, climate conditions, changing resource constraints and land-use change on biodiversity (e.g., genetic diversity, species diversity, habitat diversity).

(2) Carbon, CO_2 , and Other Trace Gases Related to Global Change

The goal of research in this area is to improve the scientific basis for understanding, predicting and assessing the quantitative role of the terrestrial biosphere as a source or sink of radiatively active trace gases such as carbon dioxide, methane, and nitrous oxide. The combined results of process, observation, and global modeling studies strongly suggest that terrestrial ecosystems must be taking up and storing significant amounts of carbon each year, yet we do not know where it is going, how long this might continue, and whether this storage will be

permanent or only temporary. Improved databases, experiments and process models are needed:

* To understand complex interactions that control exchange of CO_2 and other trace gases between the biosphere and the atmosphere for representative terrestrial ecosystems;

* To develop databases for the use, intercomparison, and testing of process-based models of net ecosystem productivity, including data to quantify carbon content of terrestrial ecosystems and estimate how sources and sinks of carbon are changing;

* To measure continental atmospheric CO_2, carbon isotopes, and oxygen to better quantify processes of terrestrial carbon cycles.

(3) Ecosystem Feedbacks to Global Change

The goal of research in this area is to improve the scientific understanding of the full range of interactions and feedbacks between terrestrial ecosystems and the atmosphere (e.g., water and energy exchange, aerosol exchange, nutrient fluxes), and between linked ecosystems at a landscape scale by, for example, biotic propagule dispersal, land-water interactions, biogeochemical linkages. Research is encouraged on how species composition, ecological properties and processes, changes in land use or land management practices influence the ability of ecosystems, for example:

* To control or modify physical factors such as albedo, regional precipitation, wind speed, and particulate movement in water and air;

* To control the movement of biological propagules between ecosystems and affect the spread of indigenous and non-indigenous species, including pest species across the landscape.

* To control biogeochemical cycling and nutrient deposition, retention and transport that affect soil fertility, and water quality;

* To regulate the exchange of energy, water, trace gases, aerosols, and biotic materials between the atmosphere and terrestrial environment under variable and/or changing climatic conditions.

Research is also encouraged on the development and testing of coupled land-atmosphere models that include interactive surface-atmosphere processes in integrative global models.

Research proposed for this competition is encouraged to take advantage of existing programs, research sites and facilities, or data sets of other agencies with multi-disciplinary efforts. Examples of such existing efforts are: NASA field campaigns (FIFE, BOREAS), DOE's National Environmental Research Parks (NERPS), Free-Air CO_2 Enrichment (FACE) field sites, the Atmospheric Radiation Measurement (ARM) Southern Great Plains site, and Program on Ecosystem Research (PER) sites, NSF's Long Term Ecological Research (LTER) sites and Land Margin Ecosystem Research (LMER) sites, and USDA's Management Systems Evaluation Areas (MSEA). Applications involving the establishment of new long-term research facilities or study sites must clearly demonstrate the need for such facilities, including the unique research opportunities they would provide.

In addition to interest in applications in these three areas, one-year scoping applications will also be considered that involve developing and demonstrating the feasibility of new experimental approaches and/or facilities for field studies to investigate the responses and/or feedback effects of terrestrial ecosystems to global environmental changes. The agencies involved in the TECO program recognize the need for new, innovative field experimental approaches and facilities to study interactive effects of environmental changes on terrestrial ecosystems. Accordingly, this announcement also seeks one-year scoping applications to design and test the feasibility of new approaches and/or field experimental systems for studying the effects of environmental changes on ecosystems. Such scoping applications should be clearly identified as such in the title of the application.

Administrative Information

To provide a consistent format for the submission and review of grant applications submitted under this notice, the preparation and submission of grant applications must follow the guidelines given in the Application Guide for the Office of Energy Research Financial Assistance Program 10 CFR Part 605.

Information about the development and submission of applications, eligibility, limitations, evaluation, the selection process, and other policies and procedures may be found in 10 CFR Part 605, and in the Application Guide for the Office of Energy Research Financial Assistance Program. The Application Guide is available from the U.S. Department of Energy, Office of Energy Research, ER–74, 19901 Germantown Road, Germantown, MD 20874–1290. Telephone requests may be made by calling (301) 903–3338. Electronic access to ER's Financial Assistance Application Guide and forms is possible via the World Wide Web at: http://www.er.doe.gov/production/grants/grants.html.

Interested scientists at Federal agencies and Federally owned or operated laboratories, including Federal-Funded Research and Development Centers (FFRDC) must contact the web site http://www.er.doe.gov/production/grants/lab97__02.html for information on this program, or seek information from a relevant agency contact listed above under the section entitled **FOR FURTHER INFORMATION CONTACT.**

All U.S. institutions eligible to receive grant support from DOE, NSF, NASA, USDA, and EPA may submit applications in response to this notice. NSF will not fund applications from FFRDCs.

Applications will be subjected to formal merit review (peer review) and will be evaluated against the following evaluation criteria which are listed in descending order of importance codified at 10 CFR 605.10(d):

1. Scientific and/or Technical Merit of the Project.
2. Appropriateness of the Proposed Methods or Approach.
3. Competency of Applicant's Personnel and Adequacy of Proposed Resources.
4. Reasonableness and Appropriateness of the Proposed Budget.

As part of the evaluation, program policy factors such as the relevance of the proposed research to the terms of the announcement and an agency's programmatic needs, are also criteria used in the selection process. Note that external peer reviewers are selected with regard to both their scientific expertise and the absence of conflicts-of-interest. Both Federal and Non-federal reviewers may be used, and submission of an application constitutes agreement that this is acceptable to the investigator(s) and the submitting institution.

Applications must not exceed 15 pages for the project description section; visual materials and tables count toward the 15 page limit. No letters of endorsement or other appendices are allowed. Applications may request funding for projects with a duration not to exceed three years and a total budget not to exceed $500,000 per year. Final selection of awards by participating agencies will be determined by the review panel's recommendations and programmatic considerations. Each award will be supported by a single agency. Overall the estimated amount of funding for this program is $7M in FY 1997, depending on the availability of funds from each agency. Principal investigators may be requested to modify their budgets and work plans to

comply with special requirements of the particular agency supporting their award. The principal investigator of an award will be requested to travel to Washington, DC for an annual meeting of all principal investigators to discuss additional collaboration, sharing of information and interaction of efforts among successful projects funded through TECO and other global change programs mentioned above. Budget requests should include travel costs to attend such a meeting.

DOE awards made as a result of this notice will be administered in accordance with the DOE Office of Energy Research Financial Assistance Program (10 CFR Part 605).

NSF awards made as a result of this notice will be administered in accordance with the terms of conditions of SF GC–1, Grant General Condition or FDP–II, Federal Demonstration Project. Copies of these documents are available at no cost from the NSF Form and Publication Unit, telephone: (703) 306–1130, or via E-mail: (internet: pubs@nsf.gov). More comprehensive information is contained in the NSF grant Policy Manual (NSF 95–26, July 1995), for sale through the Superintendent of Documents, Government Printing Office, Washington, DC 20402. The telephone number at GPO is (202) 783–3238 for subscription information.

NASA grant or cooperative agreement awards made as a result of this notice will be administered in accordance with the NASA Grant and Cooperative Agreement Handbook (NHB 5800.1).

USDA award authority for this program is contained in section 2(b) of the Act of August 4, 1965, as amended (7 U.S.C. 450i(b)). Under this program, subject to the availability of funds, the Secretary may award competitive research grants for periods not to exceed five years for the support of research projects to further the programs of the Department of Agriculture (USDA). Applications may be submitted by any state agricultural experiment station, college, private organization, corporation, or individual. Applications from scientists at non-United States organizations will not be considered for support. Pursuant to Section 712 of Public Law 103–330 (the Agriculture, Rural Development, Food and Drug Administration, and Related Agencies Appropriations Act, 1995) funds available in fiscal year 1995 to pay indirect costs on research grants award competitively by CSREES may not exceed 14 per centum of the total Federal funds provided under each award. In addition, pursuant to Section 719(b) of Public Law 103–330, in the case of any equipment or product that may be authorized to be purchased with the funds provided under this Program, entities are encouraged to purchase only American-made equipment or products.

The Catalog of Federal Domestic Assistance Number for this program is 81.049, and the solicitation control number is ERFAP 10 CFR Part 605.

Issued in Washington DC on December 18, 1995.

John Rodney Clark,

Associate Director for Resource Management, Office of Energy Research.

[FR Doc. 96–32758 Filed 12–24–96; 8:45 am]

BILLING CODE 6450–01–P

Federal Energy Regulatory Commission

[Docket No. RP97–72–001]

ANR Pipeline Company; Notice of Compliance Filing

December 19, 1996.

Take notice that on December 16, 1996, ANR Pipeline Company (ANR) tendered for filing, as part of its FERC Gas Tariff, Second Revised Volume No. 1, the following revised tariff sheets, proposed to become effective January 1, 1997:

Second Revised Sheet No. 37
Original Sheet No. 37A
Fifth Revised Sheet No. 39
Sixth Revised Sheet No. 120

ANR states that these tariff changes, regarding scheduling of its Rate Schedule FTS–2 service, are being submitted in compliance with the Commission's November 29, 1996 Order Accepting and Suspending Tariff Sheets Subject to Refund and Condition in the captioned proceeding.

Any person desiring to protest this filing should file a protest with the Federal Energy Regulatory Commission, 888 First Street, N.E., Washington, D.C. 20426, in accordance with Section 385.211 of the Commission's Rules and Regulations. All such protests must be filed in accordance with Section 154.210 of the Commission's Regulations. Protests will be considered by the Commission in determining the appropriate action to be taken, but will not serve to make protestants parties to the proceeding. Copies of this filing are on file with the Commission and are available for public inspection in the Public Inspection Room.

Lois D. Cashell,

Secretary.

[FR Doc. 96–32736 Filed 12–24–96; 8:45 am]

BILLING CODE 6717–01–M

[Docket No. RP97–20–002]

El Paso Natural Gas Company; Notice of Compliance Filing

December 19, 1996.

Take notice that on December 16, 1996, pursuant to Subpart C of 154 of the Commission's Regulations Under the Natural Gas Act and in Compliance with the Commission's order issued November 15, 1996 at Docket No. RP97–20–000, El Paso Natural Gas Company (El Paso) tendered for filing and acceptance the revised pro forma tariff sheets to its FERC Gas Tariff, Third Revised Volume No. 1 and Second Revised Volume No. 1–A, identified below.

Pro Forma Third Revised Volume No. 1

Substitute First Revised Sheet No. 302

Pro Forma Second Revised Volume No. 1–A

Substitute Second Revised Sheet No. 202
Original Sheet No. 202A
Substitute Original Sheet No. 210A
Substitute First Revised sheet No. 211
Substitute Second Revised sheet No. 214
Substitute Third Revised sheet No. 217

El Paso states that the pro forma tariff sheet are being tendered to list the Gas Industry Standards Board (GISB) Standards that are incorporated by reference and to revise the intra-day scheduling and pooling provisions. The tendered pro forma tariff sheets are proposed to become effective April 1, 1997.

El Paso states that copies of the filing were served upon all parties of record in this proceeding.

Any person desiring to protest said filing should file a protest with the Federal Energy Regulatory Commission, 888 First Street, N.E., Washington, D.C. 20426, in accordance with Section 385.211 of the Commission's Rules and Regulations. All such protests must be filed on or before January 6, 1997. Protests will be considered by the Commission in determining the appropriate action to be taken, but will not serve to make protestants parties to the proceeding. Copies of this filing are on file with the Commission and are available for public inspection in the Public Reference Room.

Lois D. Cashell,

Secretary.

[FR Doc. 96–32733 Filed 12–24–96; 8:45 am]

BILLING CODE 6717–01–M

Notice of Application to Grant Permission to Carl Donaldson to Construct a Small Commercial Marina

December 19, 1996.

Take notice that the following hydroelectric application has been filed with the Commission and is available for public inspection:

a. *Type of Application:* Non-Project Use of Project Lands and Waters.

b. *Project Name and No:* Lake Sinclair Project, FERC Project No. 1951–043.

c. *Date Filed:* August 15, 1996.

d. Applicant: Georgia Power Company.

e. *Location:* Hancock County, Georgia, Sandy Run Subdivision of the Holiday, Shores Development on Lake Sinclair near Sparta.

f. *Filed pursuant to:* Federal Power Act, 16 U.S.C. § 791(a)–825(r).

g. *Applicant Contact:* Mr. Larry J. Wall, Georgia Power Company, Connector Building, 2nd Floor, 333 Piedmont Avenue, Atlanta, Georgia 30308; (404) 526–2054.

h. *FERC Contact:* Steve Naugle, (202) 219–2805.

i. *Comment Date:* January 27, 1997.

j. *Description of the filing:* Georgia Power Company requests approval to grant permission to Mr. Carl Donaldson to construct certain facilities within the project boundary as part of a proposed small commercial marina on Lake Sinclair. The marina facilities that would be constructed within the project boundary include a boat ramp; two service docks, one of which would have fuel service for boats; 14 boat-slip piers; retaining walls along the shoreline; two above-ground, self-contained fuel storage tanks; a convenience store; and associated access drives and parking areas, portions of which extend outside the project boundary. The marina would also include an existing boat ramp, two existing access drives and parking areas, four existing and two proposed rental cottages, and an existing on-shore boat storage shelter.

k. *This notice also consists of the following standard paragraphs:* B, C1, D2.

B. Comments, Protests, or Motions to Intervene—Anyone may submit comments, a protest, or a motion to intervene in accordance with the requirements of Rules of Practice and Procedure, 18 CFR 385.210, .211, .214. In determining the appropriate action to take, the Commission will consider all protests or other comments filed, but only those who file a motion to intervene in accordance with the Commission's Rules may become a party to the proceeding. Any comments, protests, or motions to intervene must be received on or before the specified comment date for the particular application.

C1. Filing and Service of Responsive Document—Any filings must bear in all capital letters the title ''COMMENTS'', ''RECOMMENDATIONS FOR TERMS AND CONDITIONS'', ''PROTEST'', OR ''MOTION TO INTERVENE'', as applicable, and the Project Number of the particular application to which the filing refers. Any of the above-named documents must be filed by providing the original and the number of copies provided by the Commission's regulations to: The Secretary, Federal Energy Regulatory Commission, 888 First Street, N.E., Washington, D.C. 20426. A copy of any motion to intervene must also be served upon each representative of the Applicant specified in the particular application.

D2. Agency Comments—Federal, state, and local agencies are invited to file comments on the described application. A copy of the application may be obtained by agencies directly from the Applicant. If an agency does not file comments within the time specified for filing comments, it will be presumed to have no comments. One copy of an agency's comments must also be sent to the Applicant's representatives.

Lois D. Cashell,

Secretary.

[FR Doc. 96–32731 Filed 12–24–96; 8:45 am]

BILLING CODE 6717–01–M

[Docket No. CP90–239–005]

Gulf States Transmission Corporation; Notice of Application

December 19, 1996.

Take notice that on December 13, 1996, Gulf States Transmission Corporation (GSTC), 1324 North Hearn, Suite 300, Shreveport, Louisiana 71107, filed in Docket No. CP90–239–005, an application to amend the certificate issued on July 26, 1990 in Docket No. CP90–239–000, pursuant to Section 7(c) of the Natural Gas Act (NGA) and Part 157 of the Federal Energy Regulatory Commission's (Commission) regulations, to authorize GSTC to set its transportation rates based on 95% of the effective capacity, or, in the alternative, to authorize GSTC to file under Section 4 of the NGA for market-based rates, all as more fully set forth in the petition on file with the Commission and open to public inspection.

Specifically, GSTC seeks to modify the currently effective certificate condition that requires GSTC's transmission rates to be set at 95% of the proposed design capacity, 15,000 Mcf/d, by changing the condition to read: ''GSTC's transmission rates are to be set at 95% of the effective capacity of 75,00 Mcf/d.'' In the alternative, GSTC requests that the Commission find that GSTC lacks the ability to exercise market power in the relevant product and geographic markets, and amend GSTC's certificate to authorize GSTC to file under Section 4 of the NGA for market-based rates.

Any person desiring to be heard or to make any protest with reference to said application should on or before January 9, 1997, file with the Federal Energy Regulatory Commission, Washington, D.C. 20426, a motion to intervene or a protest in accordance with the requirements of the Commission's Rules of Practice and Procedure (18 CFR 385.214 or 385.211) and the Regulations under the Natural Gas Act (18 CFR 157.10). All protests filed with the Commission will be considered by it in determining the appropriate action to be taken but will not serve to make the protestants parties to the proceeding. Any person wishing to become a party to a proceeding or to participate as a party in any hearing therein must file a motion to intervene in accordance with the Commission's Rules.

Take further notice that, pursuant to the authority contained in and subject to the jurisdiction conferred upon the Federal Energy Regulatory Commission by Sections 7 and 15 of the Natural Gas Act and the Commission's Rules of Practice and Procedure, a hearing will be held without further notice before the Commission or its designee on this application if no motion to intervene is filed within the time required herein, if the Commission on its own review of the matter finds that a grant of the certificate is required by the public convenience and necessity. If a motion for leave to intervene is timely filed, or if the Commission on its own motion believes that a formal hearing is required, further notice of such hearing will be duly given.

Under the procedure herein provided for, unless otherwise advised, it will be unnecessary for GSTC to appear or be represented at the hearing.

Lois D. Cashell,

Secretary.

[FR Doc. 96–32728 Filed 12–24–96; 8:45 am]

BILLING CODE 6717–01–M

[Docket No. RP97–43–000]

Koch Gateway Pipeline Company; Notice of Technical Conference

December 19, 1996.

In the order issued on November 27, 1996,[1] in the above-captioned proceeding, the Commission found that the filing raises issues for which a technical conference is to be convened.

The conference to address the issues identified in the November 27 order has been scheduled for Tuesday, January 14, 1997, at 10:00 a.m. in a room to be designated at the offices of the Federal Energy Regulatory Commission, 888 First Street, N.E., Washington, D.C. 20426.

All interested persons and Staff are permitted to attend.

Lois D. Cashell,

Secretary.

[FR Doc. 96–32735 Filed 12–24–96; 8:45 am]

BILLING CODE 6717–01–M

[1] 77 FERC ¶ 61,228 (1996).

[Docket No. RP97–19–002]

Mojave Pipeline Company; Notice of Compliance Filing

December 19, 1996.

Take notice that on December 16, 1996, pursuant to Subpart C of 154 of the Commission's Regulations Under the Natural Gas Act and in compliance with the Commission's order issued November 15, 1996 at Docket No. RP97–19–000, Mojave Pipeline Company (Mojave) tendered for filing and acceptance revised pro forma tariff sheets to its FERC Gas Tariff, First Revised Volume No. 1.

Pro Forma First Revised Volume No. 1

Substitute First Revised Sheet No. 103
Original Sheet No. 103A
Substitute Original Sheet No. 117A

Mojave states that the pro forma tariff sheets are being tendered to list the Gas Industry Standards Board (GISB) Standards that are incorporated by reference and to revise the intra-day scheduling and pooling provisions. The tendered pro forma tariff sheets are proposed to become effective April 1, 1997.

Mojave states that copies of the filing were served upon all parties of record in this proceeding.

Any person desiring to protest said filing should file a protest with the Federal Energy Regulatory Commission, 888 First Street, N.E., Washington, D.C. 20426, in accordance with Section 385.211 of the Commission's Rules and Regulations. All such protests must be filed on or before January 6, 1997. Protests will be considered by the Commission in determining the appropriate action to be taken, but will not serve to make protestants parties to the proceedings. Copies of this filing are on file with the Commission and are available for public inspection in the Public Reference Room.

Lois D. Cashell,

Secretary.

[FR Doc. 96–32733 Filed 12–24–96; 8:45 am]

BILLING CODE 6717–01–M

[Docket No. RP97–193–000]

NorAm Gas Transmission Company; Notice of Proposed Changes in FERC Gas Tariff

December 19, 1996.

Take notice that on December 16, 1996, NorAm Gas Transmission Company (NGT) tendered for filing as part of its FERC Gas Tariff, Fourth Revised Volume No. 1, the tariff sheets listed in Appendix A to the filing, with an effective date of December 31, 1996.

NGT states that the filing is being made to comply with Order No. 582.

Any person desiring to be heard or to protest this filing should file a motion to intervene or protest with the Federal Energy Regulatory Commission, 888 First Street, N.E., Washington, D.C. 20426, in accordance with sections 385.211 and 385.214 of the Commission's Rules and Regulations. All such motions or protests must be filed in accordance with Section 154.210 of the Commission's Regulations. Protests will be considered by the Commission in determining the appropriate action to be taken, but will not serve to make protestants parties to the proceeding. Any person wishing to become a party must file a motion to intervene. Copies of this filing are on file with the Commission and are available for public inspection in the Public Inspection Room.

Lois D. Cashell,

Secretary.

[FR Doc. 96–32737 Filed 12–24–96; 8:45 am]

BILLING CODE 6717–01–M

[Docket Nos. RP94–149–008, RP94–145–007, (Consolidated) and RP95–141–005, (Not Consolidated)]

Pacific Gas Transmission Company; Notice of Refund Report

December 19, 1996.

Take notice that on December 16, 1996, Pacific Gas Transmission Company (PGT) submitted a report of refunds made in conjunction with the Stipulation and Agreement in the above-referenced proceedings. PGT states this report is filed in compliance with the March 21, 1996 Stipulation and Agreement (Stipulation), which the Commission approved by its Order of September 11, 1996 in these proceedings (76 FERC ¶ 61,246).

PGT states that refunds were made between November 15 and November 20, 1996 in accordance with the provisions of the Stipulation. PGT further states that copies of this report, with exception of Appendices F and G, are being served upon its jurisdictional customers and interested state regulatory agencies, as well as the official service list compiled by the Secretary in the above-referenced proceedings. Customers receiving refunds were previously provided with the applicable portions of Appendices F and G to the report. The applicable portions of Appendices F and G are being served on the customers' counsel of record in these proceedings and interested state regulatory agencies.

Any person desiring to protest said filing should file a protest with the Federal Energy Regulatory Commission, 888 First Street, N.E., Washington, D.C. 20426, in accordance with Section 385.211 of the Commission's Rules of Practice and Procedure. All such protests must be filed on or before December 27, 1996. Protests will be considered by the Commission in determining the appropriate action to be taken, but will not serve to make protestants parties to the proceeding. Copies of this filing are on file with the Commission and are available for public inspection in the Public Reference Room.

Lois D. Cashell,

Secretary.

[FR Doc. 96–32732 Filed 12–24–96; 8:45 am]

BILLING CODE 6717–01–M

[Docket No. CP97–154–000]

Williams Natural Gas Company; Notice of Request Under Blanket Authorization

December 19, 1996.

Take notice that on December 13, 1996, Williams Natural Gas Company (WNG), One Williams Center, Tulsa, Oklahoma 74101, filed in Docket No. CP97–154–000, a request pursuant to Sections 157.205 and 157.212 of the Commission's Regulations under the Natural Gas Act (18 CFR 157.205 and 157.212) for authorization to utilize facilities, originally installed for the delivery of NGPA Section 311 transportation gas to Mannford Public

Works Authority (Mannford) in Creek County, Oklahoma, for purposes other than NGPA Section 311 transportation, under WNG's blanket certificate authorization issued in Docket No. CP82–479–000, pursuant to Section 7(c) of the Natural Gas Act, all as more fully set forth in the request which is on file with the Commission and open to public inspection.

WNG explains that after the Section 311 facilities were installed and the Section 311 agreement was signed with Mannford, a local distribution company, an end-user behind Mannford asked about the possibility of arranging transportation on his own behalf. WNG states that it is now seeking authority to deliver Section 284 gas through the facilities as well.

WNG describes the facilities as consisting of a 3-inch tap connection, a single-run positive displacement meter with two pressure cuts, and over-pressure protection, located in Section 20, Township 19 North, Range 8 East, Creek County Oklahoma. WNG says it began delivering gas to Mannford through these Section 311 facilities on November 22, 1996, with the initial delivery being 311 Dth. WNG states that the cost to construct these facilities was approximately $50,848, which will be recouped through a new production area TSS agreement, which replaced Mannford's previous STS–P agreement. WNG explains that these facilities are an additional delivery point for Mannford and will handle all of Mannford's load through the summer and will be used in conjunction with the existing orifice meter setting through the winter months. WNG asserts that the use of the two meter settings will enable WNG to more accurately measure fluctuating gas volumes.

WNG states that the requested change is not prohibited by an existing tariff and that it has sufficient capacity to accomplish the deliveries without detriment or disadvantage to its other customers. WNG asserts that the operation of these facilities will have no impact on WNG's peak day or annual deliveries. WNG states it has sent a copy of this filing to the Oklahoma Corporation Commission.

Any person or the Commission's staff may, within 45 days after issuance of the instant notice by the Commission, file pursuant to Rule 214 of the Commission's Procedural Rules (18 CFR 385.214) a motion to intervene or notice of intervention and pursuant to Section 157.205 of the Regulations under the Natural Gas Act (18 CFR 157.205) a protest to the request. If no protest is filed within the time allowed therefor, the proposed activity shall be deemed to be authorized effective the day after the time allowed for filing a protest. If a protest is filed and not withdrawn within 30 days after the time allowed for filing a protest, the instant request shall be treated as an application for authorization pursuant to Section 7 of the Natural Gas Act.

Lois D. Cashell,

Secretary.

[FR Doc. 96–32729 Filed 12–24–96; 8:45 am]

BILLING CODE 6717–01–M

[Project No. 137–002–CA]

Pacific Gas and Electric Company; Notice of Availability of Draft Environmental Assessment

December 19, 1996.

In accordance with the National Environmental Policy Act of 1969 and the Federal Energy Regulatory Commission's (Commission's) regulations, 19 CFR Part 380 (Order No. 486, 52 F.R. 47897), the Office of Hydropower Licensing has reviewed the application for relicensing the Mokelumne River Hydroelectric Project, located in Alpine, Amador, and Calaveras Countries, California, and has prepared a Draft Environmental Assessment (DEA) for the project. In the DEA, the Commission's staff has analyzed the potential environmental impacts of the existing project and has concluded that approval of the project, with appropriate environmental protection measures, would not constitute a major federal action significantly affecting the quality of the human environment.

Copies of the DEA are available for review in the Public Reference Branch, Room 2–A, of the Commission's offices at 888 First Street, N.E., Washington, D.C. 20426.

Any comments should be filed within 30 days from the date of this notice and should be addressed to Lois D. Cashell, Secretary, Federal Energy Regulatory Commission, 888 First Street N.E., Room 1–A, Washington, D.C. 20426. Please affix ''Mokelumne River Hydroelectric Project No. 137'' to all comments. For further information, please contact Tom Dean at (202) 219–2778.

Lois D. Cashell,

Secretary.

[FR Doc. 96–32730 Filed 12–24–96; 8:45 am]

BILLING CODE 6717–01–M

Notice of Cases Filed With the Office of Hearings and Appeals; Week of November 18 Through November 22, 1996

During the Week of November 18 through November 22, 1996, the appeals, applications, petitions or other requests listed in this Notice were filed with the Office of Hearings and Appeals of the Department of Energy. Submissions inadvertently omitted from earlier lists have also been included.

Any person who will be aggrieved by the DOE action sought in any of these cases may file written comments on the application within ten days of publication of this Notice or the date of receipt of actual notice, whichever occurs first. All such comments shall be filed with the Office of Hearings and Appeals, Department of Energy, Washington, D.C. 20585–0107.

Dated: December 17, 1996.

George B. Breznay,

Director, Office of Hearings and Appeals.

LIST OF CASES RECEIVED BY THE OFFICE OF HEARINGS AND APPEALS

[Week of November 18 through November 22, 1996]

Date	Name and location of applicant	Case No.	Type of submission
November 15, 1996.	William H. Payne, Washington, DC	VFA–0243	Appeal of an information request denial. If granted: The October 10, 1996 Freedom of Information Request Denial issued by the Office of Inspector General would be rescinded, and William H. Payne would receive access to certain Department of Energy Information.
November 20, 1996.	Personnel security hearing	VSO–0124	Request for hearing under 10 CFR Part 710. If granted: An individual employed by a Contractor of the Department of Energy would receive a hearing under 10 CFR Part 710.

LIST OF CASES RECEIVED BY THE OFFICE OF HEARINGS AND APPEALS—Continued

[Week of November 18 through November 22, 1996]

Date	Name and location of applicant	Case No.	Type of submission
November 20, 1996.	Personnel security hearing	VSO–0125	Request for hearing under 10 CFR Part 710. If granted: An individual employed by a Contractor of the Department of Energy would receive a hearing under 10 CFR Part 710.
November 21, 1996.	James L. Hecht, Wilmington, DE	VFA–0244	Appeal of an information request denial. If granted: The October 29, 1996 Freedom of Information Request Denial issued by the Office of Energy Efficiency and Renewable Energy would be rescinded, and James L. Hecht would receive access to certain DOE information.
November 22, 1996.	Personnel security hearing	VSO–0126	Request for hearing under 10 CFR Part 710. If granted: An individual employed by a Contractor of the Department of Energy would receive a hearing under 10 CFR Part 710.
November 22, 1996.	Personnel security hearing	VSA–0103	Request for review of opinion under 10 CFR Part 710. If granted: The October 24, 1996 Opinion of the Office of Hearings and Appeals, Case No. VSO–0103, would be reviewed at the request of an individual employed by the Department of Energy.

[FR Doc. 96–32757 Filed 12–24–96; 8:45 am]

BILLING CODE 6450–01–P

ENVIRONMENTAL PROTECTION AGENCY

[OPP–30112A; FRL–5396–3]

Chlorothalonil; Notice of Withdrawal of Administrative Exception Request to Worker Protection Standard's Prohibition of Early Entry Into Pesticide-Treated Areas to Harvest Muskmelons by Hand

AGENCY: Environmental Protection Agency (EPA).

ACTION: Notice of withdrawal of petition.

SUMMARY: The State of Indiana has notified EPA that it is withdrawing its petition for an exception to the 48–hour restricted entry interval (REI) for chlorothalonil on muskmelon fields.

EFFECTIVE DATE: This document became effective December 9, 1996.

FOR FURTHER INFORMATION CONTACT: Joshua First, Office of Pesticide Programs, Field Operations Division (7506C), Environmental Protection Agency, 401 M St., SW., Washington, DC 20460. Office location, telephone number, and e-mail address: Rm. 1121, 1921 Jefferson Davis Highway, Crystal Mall 1B2, Arlington, VA, 703–305–7437, e-mail: first.joshua@epamail.epa.gov.

SUPPLEMENTARY INFORMATION:

I. Background

On August 21, 1992 (57 FR 38102), EPA issued a final rule revising the Worker Protection Standard (WPS) for agricultural pesticides (40 CFR part 170). The WPS became fully implemented on January 1, 1995. The WPS contains requirements for training, notification of pesticide applications, use of personal protective equipment (PPE), decontamination, and emergency medical assistance. The WPS also set new restricted entry intervals (REIs) for thousands of pesticide products; many of the REIs were increased. Chlorothalonil's REI on muskmelons increased from 12 hours to 48 hours.

II. Early Entry Exceptions

In general, § 170.112 of the WPS prohibits agricultural workers from entering a pesticide-treated area during a REI. REIs are specified on the pesticide product label and typically range from 12 to 72 hours. Product-specific longer REIs have been set for a few pesticides.

Under § 170.112(e) of the WPS, EPA may establish exceptions to the Standard's provision of prohibiting early entry to perform routine hand labor tasks. Before implementing such changes, however, EPA is required to provide a 30–day public comment period. EPA will grant or deny a request for an exception based on a risk-benefit analysis. However, as required by 40 CFR 170.112(e)(3), the analysis must take into account both the added risks and the benefits from allowing early entry to perform hand labor tasks.

III. Indiana's Petition for an Exception and Subsequent Retraction of the Petition

Late in March 1996, EPA received a petition from the State of Indiana. Indiana petitioned the Agency under § 170.112(e) to allow early entry by workers into chlorothalonil-treated muskmelon fields to perform hand labor harvesting. The current REI for chlorothalonil remains at 48 hours after application. Although a specific REI was not requested in the petition, Indiana requested entry as soon as feasible following the application of the fungicide, before the expiration of the REI. Indiana's petition stated that muskmelon growers would suffer substantial economic losses if they could not harvest their crop on a daily basis. The requested time period for the exception was from June 15 through August 30, 1996. EPA published a Notice of Receipt for the petition in the Federal Register of June 7, 1996 (61 FR 29096) (FRL–5373–8) and provided a 30–day public comment period.

In early July 1996, following the 30-day public comment period on the petition, EPA began its analysis of the comments that were received. On July 17, 1996, Indiana officially withdrew its petition in a retraction letter to Daniel M. Barolo, Director, Office of Pesticide Programs.

List of Subjects

Environmental protection, Occupational safety and health, Pesticides and pests.

Dated: December 9, 1996.

Lynn R. Goldman,

Assistant Administrator for Prevention, Pesticides and Toxic Substances.

[FR Doc. 96–32797 Filed 12–24–96; 8:45 am]

BILLING CODE 6560–50–F

[OPP–30426; FRL–5578–5]

Cartilage Technologies, Inc.; Application to Register a Pesticide Product

AGENCY: Environmental Protection Agency (EPA).

ACTION: Notice.

SUMMARY: This notice announces receipt of an application to register a pesticide product containing an active ingredient not included in any currently registered product pursuant to the provisions of section 3(c)(4) of the Federal Insecticide, Fungicide, and Rodenticide Act (FIFRA), as amended.

DATES: Written comments must be submitted by January 27, 1997.

ADDRESSES: By mail, submit written comments identified by the document control number [OPP–30426] and the file symbol (69167–R) to: Public Response and Program Resources Branch, Field Operations Division (7506C), Office of Pesticide Programs, Environmental Protection Agency, 401 M St., SW., Washington, DC 20460. In person, bring comments to: Environmental Protection Agency, Rm. 1132, CM #2, 1921 Jefferson Davis Hwy., Arlington, VA.

Comments and data may also be submitted electronically by sending electronic mail (e-mail) to: opp-docket@epamail.epa.gov. Electronic comments must be submitted as an ASCII file avoiding the use of special characters and any form of encryption. Comments and data will be accepted on disks in Wordperfect in 5.1 file format or ASCII file format. All comments and data in electronic form must be identified by the docket number [OPP–30426]. No ''Confidential Business Information'' (CBI) should be submitted through e-mail. Electronic comments on this notice may be filed online at many Federal Depository Libraries. Additional information on electronic submission can be found below in this document.

Information submitted as a comment concerning this notice may be claimed confidential by marking any part or all of that information as ''Confidential Business Information'' (CBI). Information so marked will not be disclosed except in accordance with procedures set forth in 40 CFR part 2. A copy of the comment that does not contain CBI must be submitted for inclusion in the public record. Information not marked confidential may be disclosed publicly by EPA without prior notice. All written comments will be available for public inspection in Rm. 1132 at the address given above, from 8 a.m. to 4:30 p.m., Monday through Friday, excluding holidays.

FOR FURTHER INFORMATION CONTACT: By mail: John Tice, Biopesticides and Pollution Prevention Division (7501W), Office of Pesticide Programs, Environmental Protection Agency, 401 M St., SW., Washington, DC 20460. Office location and telephone number: Rm. CS51B6, Westfield Building North Tower, 2800 Crystal Drive, Arlington, VA 22202, (703) 308–8295; e-mail: tice.john@epamail.epa.gov.

SUPPLEMENTARY INFORMATION: EPA received an application from Cartilage Technologies, Inc., 200 Clearbrook Road, Elmsford, NY 10523, to register the pesticide product Stoplite For Babies (EPA File Symbol 69197–R), an insect repellent, containing the active ingredient geranium oil at 0.4 percent, an active ingredient not included in any currently registered product pursuant to the provisions of section 3(c)(4) of FIFRA. The product is classified for general use as an insect repellent to repel biting insects. Notice of receipt of the application does not imply a decision by the Agency on the application.

Notice of approval or denial of an application to register a pesticide product will be announced in the Federal Register. The procedure for requesting data will be given in the Federal Register if an application is approved.

Comments received within the specified time period will be considered before a final decision is made; comments received after the time specified will be considered only to the extent possible without delaying processing of the application.

A record has been established for this notice under docket number [OPP–30426] (including comments and data submitted electronically as described below). A public version of this record, including printed, paper versions of electronic comments, which does not include any information claimed as CBI, is available for inspection from 8 a.m. to 4:30 p.m., Monday through Friday, excluding legal holidays. The public record is located in Rm. 1132 of the Public Response and Program Resources Branch, Field Operations Division (7506C), Office of Pesticide Programs, Environmental Protection Agency, Crystal Mall #2, 1921 Jefferson Davis Highway, Arlington, VA.

Electronic comments can be sent directly to EPA at:

opp-docket@epamail.epa.gov

Electronic comments must be submitted as an ASCII file avoiding the use of special characters and any form of encryption.

The official record for this notice, as well as the public version, as described above will be kept in paper form. Accordingly, EPA will transfer all comments received electronically into printed, paper form as they are received and will place the paper copies in the official record which will also include all comments submitted directly in writing. The official record is the paper record maintained at the address in ''ADDRESSES'' at the beginning of this document.

Written comments filed pursuant to this notice, will be available in the Public Response and Program Resources Branch, Field Operations Division at the address provided from 8 a.m. to 4:30 p.m., Monday through Friday, excluding legal holidays. It is suggested that persons interested in reviewing the application file, telephone this office at (703–305–5805), to ensure that the file is available on the date of intended visit.

Authority: 7 U.S.C. 136.

List of Subjects

Environmental protection, Pesticides and pests, Product registration.

Dated: December 12, 1996.

Janet L. Andersen,

Director, Biopesticides and Pollution Prevention Division, Office of Pesticide Programs.

[FR Doc. 96–32795 Filed 12–24–96; 8:45 am]

BILLING CODE 6560–50–F

[OPP–00448; FRL–5393–5]

Registration Policies Pertaining to Rodenticide Baits and Other Vertebrate Pesticides

AGENCY: Environmental Protection Agency (EPA).

ACTION: Draft PR Notice; notice of availability.

SUMMARY: EPA announces the availability of a draft pesticide regulation (PR) notice that summarizes policies affecting the registrations of rodenticide baits and other vertebrate pesticide products, which include toxicants and repellents. The PR notice outlines historical policies which are largely or completely specific to vertebrate pesticides, especially rodenticide baits. Most of these policies pertain to where the Agency draws distinctions among products based upon formulations, bait forms, and packaging arrangements. The PR notice also announces a proposed new policy under which it would be possible for rodenticide baits of a common formulation to be sold in placepacks of

different sizes under a single registration number.

DATES: Written comments, identified by the document control number [OPP–00448], must be received on or before February 24, 1997.

ADDRESSES: By mail, submit written comments to: Public Response and Program Resources Branch, Field Operations Division (7506C), Office of Pesticide Programs, Environmental Protection Agency, 401 M St., SW., Washington, DC 20460. In person, bring comments to: Rm. 1132, CM #2, 1921 Jefferson Davis Highway, Arlington, VA 22202. Copies of the draft notice may be requested from the Public Response and Program Resources Branch by telephone (703) 305–5805) or by writing to the Washington, DC, address indicated above.

Comments and data may also be submitted electronically by sending electronic mail (e-mail) to: opp-docket@epamail.epa.gov. Electronic comments must be submitted as an ASCII file avoiding the use of special characters and any form of encryption. Comments and data will also be accepted on disks in WordPerfect 5.1 file format or ASCII file format. All comments and data in electronic form must be identified by the docket number [OPP–00448]. No Confidential Business Information (CBI) should be submitted through e-mail. Electronic comments on this proposed rule may be filed online at many Federal Depository Libraries. Additional information on electronic submissions can be found below in this document.

Information submitted as a comment concerning this document may be claimed confidential by marking any or all of that information as ''Confidential Business Information'' (CBI) . Information so marked will not be disclosed except in accordance with procedures set forth in 40 CFR part 2. A copy of the comment that does not contain CBI must be submitted for inclusion in the public record. Information not marked confidential may be disclosed publicly by EPA without prior notice. All written comments will be available for public inspection in Room 1128 at the Virginia address given above, from 8:30 a.m. to 4:00 p.m., Monday through Friday, excluding legal holidays.

FOR FURTHER INFORMATION CONTACT: By mail: William W. Jacobs, Insecticide-Rodenticide Branch, Registration Division (7505C), Environmental Protection Agency, 401 M St., SW., Washington, DC 20460. Office location and telephone number: Room 259, CM #2, 1921 Jefferson Davis Highway, Arlington, (703) 305–6406.

SUPPLEMENTARY INFORMATION:

EPA has established a record for this notice of availability under docket number [OPP–00448] (including any comments and data submitted electronically). A public version of this record, including printed, paper versions of electronic comments, which does not include any information claimed as CBI, is available for inspection from 8:30 a.m. to 4:00 p.m., Monday through Friday, excluding legal holidays. The public record is located in Room 1132 of the Public Response and Program Resources Branch, Field Operations Division (7506C), Office of Pesticide Programs, Environmental Protection Agency, Crystal Mall #2, 1921 Jefferson Davis Highway, Arlington, VA.

Electronic comments may be sent directly to EPA at:

opp-docket@epamail.epa.gov.

Electronic comments must be submitted as an ASCII file avoiding the use of special characters and any form of encryption.

The official record for this notice of availability, as well as the public version, as described above will be kept in paper form. Accordingly, EPA will transfer any comments received electronically into printed, paper form as they are received and will place the paper copies in the official record which will also include all comments submitted directly in writing. The official record is the paper record maintained at the address in ''ADDRESSES'' at the beginning of this document.

List of Subjects

Environmental protection, Administrative practice and procedure, Agricultural commodities, Pesticides and pests, Reporting and recordkeeping requirements.

Dated: December 18, 1996.

Stephen L. Johnson,

Director, Registration Division, Office of Pesticide Programs.

[FR Doc. 96–32798 Filed 12–24–96; 8:45 am]

BILLING CODE 6560–50–F

[PF–680; FRL–5576–7]

American Cyanamid Company; Pesticide Tolerance Petition Filing

AGENCY: Environmental Protection Agency (EPA).

ACTION: Notice of filing.

SUMMARY: This notice is a summary of a pesticide petition proposing the establishment of a regulation for residues of AC 299263 [(±)-2-[4,5-dihydro-4-methyl-4-(1-methylethyl)-5-oxo-1*H*-imidazol-2-yl]-5-(methoxymethyl)-3-pyridinecarboxylic acid] in or on soybean seed.

DATES: Comments, identified by the docket number [PF–680], must be received on or before, January 27, 1997.

ADDRESSES: By mail, submit written comments to Public Response and Program Resources Branch, Field Operations Division (7506C), Office of Pesticide Programs, Environmental Protection Agency, 401 M St., SW., Washington, DC 20460. In person, bring comments to Rm. 1132, CM #2, 1921 Jefferson Davis Highway, Arlington, VA. Comments and data may also be submitted electronically by sending electronic mail (e-mail) to: opp-docket@epamail.epa.gov. Electronic comments on this notice may be filed online at many Federal Depository Libraries. Additional information on electronic submissions can be found below in Unit II. of this document.

Information submitted as comments concerning this document may be claimed confidential by marking any part or all of that information as ''Confidential Business Information'' (CBI). CBI should not be submitted through e-mail. Information marked as CBI will not be disclosed except in accordance with procedures set forth in 40 CFR part 2. A copy of the comment that does not contain CBI must be submitted for inclusion in the public record. Information not marked confidential may be disclosed publicly by EPA without prior notice. All written comments will be available for public inspection in Rm. 1132 at the address given above, from 8:30 a.m. to 4 p.m., Monday through Friday, excluding legal holidays.

FOR FURTHER INFORMATION CONTACT: Robert Taylor, Product Manager (PM) 25, Registration Division (7505C), Office of Pesticide Programs, Environmental Protection Agency, 401 M St., SW., Washington, DC 20460. Office location, telephone number, and e-mail address: Rm. 241, CM #2, 1921 Jefferson Davis Highway, Arlington, VA, Telephone: 703–305–6027, e-mail: taylor.robert@epamail.epa.gov.

SUPPLEMENTARY INFORMATION: EPA has received a pesticide petition (PP) 6F4649 from American Cyanamid Company, P.O. Box 400, Princeton, NJ 08543–0400, proposing pursuant to section 408(d) of the Federal Food, Drug, and Cosmetic Act (FDDCA), 21 U.S.C. section 346a(d), to amend 40 CFR

part 180 by establishing a tolerance for residues of the herbicide AC 299263 in or on the raw agricultural commodity soybean seed at 0.1 ppm. The proposed analytical method is HPLC Method M2248.01.

Pursuant to section 408(d)(2)(A)(i) of the FFDCA, as amended, American Cyanamid Company has submitted the following summary of information, data, and arguments in support of their pesticide petition. This summary was prepared by American Cyanamid Company and EPA has not fully evaluated the merits of the petition.

EPA edited the summary to clarify that the conclusions and arguments were the petitioner's and not necessarily EPA's and to remove certain extraneous material.

I. Petition Summary

On November 30, 1995, American Cyanamid Company petitioned the EPA, under pesticide petition (PP) 6F4649, for a permanent tolerance of 0.1 ppm for the residues of AC 299263 on soybean seed.

Section 408(b)(2)(A) of the amended FFDCA allows EPA to establish a tolerance only if the Administrator determines that there is a ''reasonable certainty that no harm will result from the aggregate exposure to the pesticide chemical residue, including all anticipated dietary exposures and all other exposures for which there is reliable information.''

All of the studies required for the proposed use pattern have been completed and submitted to EPA for review. The available information indicates there is a reasonable certainty that no harm will result from various types of exposure.

The following is a summary of the information submitted to EPA to support the establishment, under section 408(b)(2)(D) of the amended FFDCA, of a tolerance for AC 299263 on soybean seed.

A. Residue Chemistry

1. *Plant metabolism*. The qualitative nature of the residues of AC 299263 in soybeans is adequately understood. Parent compound is the only residue of concern. The requirement for a processing study was waived by EPA based on the results of field trials at rates up to 5x the maximum label rate. In these trials, there was no measurable residue of AC 299263 in soybean seed above the validated sensitivity of the method (0.05 ppm). In addition, results from the plant metabolism study showed no detectable residues of AC 299263 in oil obtained from soybean seed which had been treated at an exaggerated use rate.

2. *Analytical method*. A practical analytical method (HPLC Method M2248.01) for detecting and measuring levels of AC 299263 in soybean seed has been submitted to EPA. This method is appropriate for enforcement purposes.

3. *Magnitude of residues*. No apparent residues of AC 299263 were observed in soybean seed at or above 0.05 ppm (the limit of quantitation for the analytical method). These field studies, conducted at 1–5x the highest intended label use rate, clearly support the proposed tolerance of 0.1 ppm.

B. Toxicological Profile

A complete battery of mammalian toxicity studies supports the tolerance for AC 299263 on soybean seed. The data base is complete, valid and reliable, and all studies have been submitted to EPA for review.

1. *Acute toxicity*. Based on EPA criteria, AC 299263 technical material is relatively non-toxic via the oral and inhalation routes of exposure (Category IV), and is only slightly toxic (Category III) via dermal exposure.

Acute oral toxicity in rats: LD50 > 5,000 mg/kg

Acute dermal toxicity in rabbits: LD50 > 4,000 mg/kg

Acute inhalation toxicity in rats: LC50 > 6.3 mg/l (analytical)

Primary eye irritation in rabbits: Slightly to moderately irritating

Primary dermal irritation in rabbits: Non-irritating to slightly irritating

Dermal sensitization in guinea pigs: Non-sensitizer

2. *Genotoxicity*. The results from a battery of three *in vitro* and one *in vivo* genetic toxicity tests with AC 299263 show that this compound is not mutagenic or genotoxic.

Gene mutation - Ames: Negative

In vitro structural chromosomal aberration assay: Negative

In vitro CHO/HGPRT assay: Negative

In vivo micronucleus aberration assay: Negative

3. *Reproductive and developmental toxicity*. Results of these studies indicate that AC 299263 is not a reproductive toxicant, a developmental toxicant, or a teratogen.

Teratology in rats: NOEL (maternal) = 500 mg/kg/day NOEL (fetal/developmental) = 1000 mg/kg/day*

Teratology in rabbits: NOEL (maternal) = 300 mg/kg/day NOEL (fetal/developmental) = 900 mg/kg/day*

Two-Generation reproduction in rats: NOEL (parental and reproductive) = 20,000 ppm* (~ 1639 mg/kg/day)

* highest concentration tested

4. *Subchronic toxicity*. No treatment-related adverse effects were noted in subchronic toxicity studies at the highest doses tested.

28-Day dermal in rats: NOEL = 1000 mg/kg/day*

13-Week oral feeding in rats: NOEL = 20,000 ppm* (~ 1661 mg/kg/day)

90-Day oral feeding in dogs: NOEL = 40,000 ppm* (~ 1368 mg/kg/day)

* highest concentration tested

5. *Chronic toxicity*. The low order of mammalian toxicity of AC 299263 technical is also evident from the chronic dietary toxicity studies. These studies showed no increased mortalities or clinical signs of toxicity attributed to AC 299263 treatment. There was no gross or microscopic evidence of treatment-related lesions or carcinogenicity in the three chronic studies conducted in dogs, mice, or rats.

1-Year chronic toxicity in dogs: NOEL = 40,000 ppm* (~ 1,165 mg/kg/day)

18-Month chronic toxicity and carcinogenicity in mice: NOEL = 7,000 ppm* (~ 1201 mg/kg/day)

24-Month chronic toxicity and carcinogenicity in rats: NOEL = 20,000 ppm* (~ 1,167 mg/kg/day)

* highest concentration tested

6. *Animal metabolism*. The qualitative nature of the residues of AC 299263 in animals is adequately understood. Based on metabolism studies with goats, hens and rats, there is no reasonable expectation that measurable AC 299263-related residues will occur in meat, milk, poultry or eggs from the proposed use.

7. *Metabolite toxicology*. No toxicologically significant metabolites were detected in plant or animal metabolism studies. Therefore, no metabolites are required to be regulated.

8. *Endocrine effects*. Collective organ weights and histopathological findings from the two-generation rat reproductive study, as well as from the subchronic and chronic toxicity studies in two or more animal species, demonstrate no apparent estrogenic effects or effects on the endocrine system. There is no information available which suggests that AC 299263 would be associated with endocrine effects.

C. Aggregate Exposure

1. *Dietary exposure*.-- (i) *Food*. The Theoretical Maximum Residue Concentrations (TMRC) of AC 299263 on or in soybean seed are:

0.000036 mg/kg b.w./day for the general U.S. population

0.000252 mg/kg b.w./day for non-nursing infants

0.000064 mg/kg b.w./day for children 1 to 6 years of age

0.000050 mg/kg b.w./day for children 7 to 12 years of age

These TMRC values are calculated from the proposed 0.1 ppm tolerance of AC 299263 on soybean seed using a ''worse case'' estimate of dietary exposure. This conservative estimate assumes that 100 percent of all soybeans are treated with AC 299263 and that the residues of AC 299263 on soybean seed are at the tolerance level (0.1 ppm). In fact, no apparent residues were observed in soybean seed at or above the 0.05 ppm limit of quantitation of the residue method.

There are no other established tolerances for AC 299263, and there are no other registered uses for AC 299263 on food or feed crops.

(ii) *Drinking water.* There is no available information about AC 299263 exposures via levels in drinking water. Studies verify that the use of AC 299263 in soybeans, at the proposed application rate of 0.04 lb. ai/acre, has a low potential for ground water contamination. Results from field dissipation studies showed rapid initial degradation of AC 299263 in soil, and additional studies indicate that AC 299263 is resistant to desorption with time. Furthermore, AC 299263 soil metabolites suggest a ''moderate to strong'' soil binding potential.

EPA has not established a Maximum Concentration Level for AC 299263 in drinking water under the Safe Drinking Water Act, because it is unlikely to be found in ground water. Because of the very low level of mammalian toxicity of parent AC 299263 and its two major soil metabolites, there is no health risk to humans from exposure to parent or soil metabolites in ground water. A Lifetime Health Advisory level for AC 299263 in drinking water calculated by EPA procedures would be 81.55 mg/liter, assuming a 20% relative contribution from water.

There is a reasonable certainty that no harm will result from dietary exposure to AC 299263, because dietary exposure to residues on food will use only a small fraction of the Reference Dose (including exposure of sensitive populations), and exposure through drinking water is expected to be insignificant.

2. *Non-dietary exposure.* There is no available information quantifying non-dietary exposure to AC 299263. However, based on the physical and chemical characteristics of the compound, the proposed use pattern and available information concerning its environmental fate, non-dietary exposure is expected to be negligible.

D. Cumulative Effects

AC 299263 belongs to the imidazolinone class of compounds. The herbicidal activity of the imidazolinones is due to the inhibition of acetohydroxy acid synthase (AHAS), an enzyme only found in plants. AHAS is part of the biosynthetic pathway leading to the formation of branched chain amino acids. Animals lack AHAS and this biosynthetic pathway. This lack of AHAS contributes to the extremely low toxicity of AC 299263 in mammals. Although other registered imidazolinones have a similar herbicidal mode of action, there is no information available to suggest that these compounds exhibit a similar toxicity profile in the mammalian system. Since AC 299263 is relatively non-toxic, cumulative effects of residues of AC 299263 and other compounds are not anticipated.

E. Safety Determination

1. *U.S. population.* Based on a RfD of 11.65 mg/kg b.w./day, supported by a NOEL of 40,000 ppm or 1165 mg/kg b.w./day from the 1-year dog study and a safety (uncertainty) factor of 100, the ''worse case'' estimate of chronic dietary exposure of AC 299263 in soybean seed will utilize approximately 0.0003 percent of the RfD for the general U.S. population. EPA generally has no concern for exposures below 100 percent of the RfD because the RfD represents the level at or below which daily aggregate dietary exposure over a lifetime will not pose appreciable risks to human health. The complete and reliable toxicity data and the conservative chronic exposure assumptions support the conclusion that there is a ''reasonable certainty of no harm'' from aggregate exposure to AC 299263 residues.

2. *Infants and children.* The conservative estimates, as described above, indicate that dietary exposure of AC 299263 on soybeans will utilize approximately 0.002 percent of the RfD for non-nursing infants, approximately 0.0006 percent of the RfD for children ages 1 to 6, and approximately 0.0004 percent of the RfD for children ages 7 to 12.

No developmental, reproductive, or fetotoxic effects were noted at the highest doses of AC 299263 tested in guideline studies. The only maternal effects in the rat and rabbit teratology studies were decreased body weights, body weight gains, and absolute and relative feed consumption in the higher dose groups of each study.

Based on the current toxicological data requirements, the data base relative to pre-and post-natal effects for children is complete, valid, and reliable. Results from the teratology studies and the two-generation reproduction study, which support NOELs for fetal/developmental effects or reproductive/offspring effects, respectively, equivalent to the highest concentrations tested, suggest that there is no additional sensitivity of infants and children to residues of AC 299263. Therefore, an additional safety (uncertainty) factor is not warranted, and the RfD of 11.65 mg/kg b.w./day, which utilizes a 100-fold safety factor, is appropriate to assure a reasonable certainty of no harm to infants and children.

F. International Tolerances

There is no Codex maximum residue level established for residues of AC 299263 on soybean seed.

II. Administrative Matters

Interested persons are invited to submit comments on this notice of filing. Comments must bear a notation indicating the document control number, [PF–680]. All written comments filed in response to this petition will be available in the Public Response and Program Resources Branch, at the address give above from 8:30 a.m. to 4 p.m., Monday through Friday, except legal holidays.

A record has been established for this notice under docket number [PF–680] including comments and data submitted electronically as described below). A public version of this record, including printed, paper versions of electronic comments, which does not include any information claimed as CBI, is available for inspection from 8:30 a.m. to 4 p.m., Monday through Friday, excluding legal holidays. The public record is located in Rm. 1132 of the Public Response and Program Resources Branch, Field Operations Division (7506C), Office of Pesticide Programs, Environmental Protection Agency, Crystal Mall #2, 1921 Jefferson Davis Highway, Arlington, VA.

Electronic comments can be sent directly to EPA at:

opp-docket@epamail.epa.gov

Electronic comments must be submitted as ASCII file avoiding the use of special characters and any form of encryption.

The official record for this rulemaking, as well as the public version, as described above will be kept in paper form. Accordingly, EPA will transfer all comments received electronically into printed, paper form as they are received and will place the paper copies in the official rulemaking record which will also include all comments submitted directly in writing. The official rulemaking record is the paper record maintained at the address

in ''ADDRESSES'' at the beginning of this document.

List of Subjects

Environmental protection, Administrative practice and procedure, Agricultural commodities, Pesticides and pests, Reporting and recordkeeping requirements.

Dated: December 17, 1996.

Peter Caulkins,

Acting Director, Registration Division, Office of Pesticide Programs.

[FR Doc. 96–32796 Filed 12–24–96; 8:45 am]

BILLING CODE 6560–50–F

[OPPT–59357; FRL–5581–7]

Certain Chemical; Approval of a Test Marketing Exemption

AGENCY: Environmental Protection Agency (EPA).

ACTION: Notice.

SUMMARY: This notice announces EPA's approval of an application for test marketing exemption (TME) under section 5(h)(1) of the Toxic Substances Control Act (TSCA) and 40 CFR 720.38. EPA has designated this application as TME–97–3. The test marketing conditions are described below.

DATES: This notice becomes effective December 19, 1996. Written comments will be received until January 10, 1997.

ADDRESSES: Written comments, identified by the docket number [OPPT–59357] and the specific TME number [TME 97–3] should be sent to: TSCA nonconfidential center (NCIC), Office of Pollution Prevention and Toxics, Environmental Protection Agency, Rm. NEB–607 (7407), 401 M St., SW., Washington, DC 20460, (202) 554–1404, TDD (202) 554–0551.

Comments and data may also be submitted electronically by sending electronic mail (e-mail) to: ncic@epamail.epa.gov. Electronic comments must be submitted as an ASCII file avoiding the use of special characters and any form of encryption. Comments and data will also be accepted on disks in WordPerfect in 5.1 file format or ASCII file format. All comments and data in electronic form must be identified by [OPPT–59357]. No Confidential Business Information (CBI) should be submitted through e-mail. Electronic comments on these notices may be filed online at many Federal Depository Libraries. Additional information on electronic submissions can be found under ''SUPPLEMENTARY INFORMATION''.

FOR FURTHER INFORMATION CONTACT: Darlene Jones, New Chemicals Branch, Chemical Control Division (7405), Office of Pollution Prevention and Toxics, Environmental Protection Agency, Rm. E–447, 401 M St. SW., Washington, DC 20460, (202) 260–2279; jones.darlene@epamail.epa.gov.

SUPPLEMENTARY INFORMATION: Section 5(h)(1) of TSCA authorizes EPA to exempt persons from premanufacture notification (PMN) requirements and permit them to manufacture or import new chemical substances for test marketing purposes if the Agency finds that the manufacture, processing, distribution in commerce, use, and disposal of the substances for test marketing purposes will not present an unreasonable risk of injury to human health or the environment. EPA may impose restrictions on test marketing activities and may modify or revoke a test marketing exemption upon receipt of new information which casts significant doubt on its finding that the test marketing activity will not present an unreasonable risk of injury.

EPA hereby approves TME–97–3. EPA has determined that test marketing of the new chemical substance described below, under the conditions set out in the TME application, and for the time period and restrictions specified below, will not present an unreasonable risk of injury to human health or the environment. Production volume, use, and the number of customers must not exceed that specified in the application. All other conditions and restrictions described in the application and in this notice must be met.

A notice of receipt of the application was not published in advance of approval. Therefore, an opportunity to submit comments is being offered at this time. EPA may modify or revoke the test marketing exemption if comments are received which cast significant doubt on its finding that the test marketing activities will not present an unreasonable risk of injury.

The following additional restrictions apply to TME–97–3. A bill of lading accompanying each shipment must state that the use of the substance is restricted to that approved in the TME. In addition, the Company shall maintain the following records until 5 years after the date they are created, and shall make them available for inspection or copying in accordance with section 11 of TSCA:

1. The applicant must maintain records of the quantity of the TME substance produced and the date of manufacture.

2. The applicant must maintain records of dates of the shipments to each customer and the quantities supplied in each shipment.

3. The applicant must maintain copies of the bill of lading that accompanies each shipment of the TME substance.

TME–97–3.

Date of Receipt: October 30, 1996.

Close of Review Period: December 20, 1996 (inclusive of a voluntary suspension). The extended comment period will close January 10, 1997.

Applicant: Confidential.

Chemical: (G) Ammonium Benzophenonecarboxylate.

Use: (G) Dispersing Agent.

Production Volume: Confidential.

Number of Customers: Confidential.

Test Marketing Period: Confidential.

Risk Assessment: EPA identified no significant human health or environmental concerns. Therefore, the test market activities will not present an unreasonable risk of injury to health or the environment.

The Agency reserves the right to rescind approval or modify the conditions and restrictions of an exemption should any new information come to its attention which casts significant doubt on its finding that the test marketing activities will not present an unreasonable risk of injury to health or the environment.

A record has been established for this notice under docket number OPPT–59357 (including comments and data submitted electronically as described above). A public version of this record, including printed page versions of electronic comments, which does not include any information claimed as CBI, is available for inspection from 12 noon to 4 p.m., Monday through Friday, excluding legal holidays. The public record is located in the TSCA nonconfidential information center (NCIC), Rm. NEB–607, 401 M St., SW., Washington, DC 20460. Electronic comments must be submitted as an ASCII file avoiding the use of special characters and any form of encryption.

The official records for these notices, as well as the public version, as described above will be kept in paper form. Accordingly, EPA will transfer all comments received electronically into printed, paper form as they are received and will place the paper copies in the official record which will also include all comments submitted directly in writing. The official record is the paper record maintained at the address in ''ADDRESSES'' at the beginning of this document.

List of Subjects

Environmental protection, Test marketing exemption.

Dated: December 19, 1996.

Paul J. Campanella,

Chief, New Chemicals Branch, Office of Pollution Prevention and Toxics.

[FR Doc. 96–32794 Filed 12–24–96; 8:45 am]

BILLING CODE 6560–50–F

EQUAL EMPLOYMENT OPPORTUNITY COMMISSION

RIN 3046–AA45

Agency Information Collection Activities: Proposed Collection; Comments Request

AGENCY: Equal Employment Opportunity Commission.

ACTION: Notice.

SUMMARY: In accordance with the Paperwork Reduction Act of 1995, 44 U.S.C. Chapter 5, the Commission announces that it intends to submit to the Office of Management and Budget (OMB) a request for an extension without change the existing collection requirements under 29 CFR Part 1602 *et seq.*, Recordkeeping and Reporting Requirement under Title VII and the ADA. The Commission is seeking public comments on the proposed extension.

DATES: Written comments on this notice must be submitted on or before February 24, 1997.

ADDRESSES: Comments should be submitted to Frances M. Hart, Executive Officer, Executive Secretariat, Equal Employment Opportunity Commission, 10th Floor, 1801 L Street, N.W., Washington, D.C. 20507. As a convenience to commentators, the Executive Secretariat will accept comments transmitted by facsimile (''FAX'') machine. The telephone number of the FAX receiver is (202) 7663–4114. (This is not a toll free number.) Only comments of six or fewer pages will be accepted via FAX transmittal. This limitation is necessary to assure access to the equipment. Receipt of FAX transmittals will not be acknowledged, except that the sender may request confirmation of receipt by calling the Executive Secretariat staff at (202) 663–4078 (voice) or (202) 663–4074 (TDD). (These are not toll free telephone numbers.) Copies of comments submitted by the public will be available for review at the Commission's library, Room 6502, 1801 L Street, N.W., Washington, D.C. 20507 between the hours of 9:30 a.m. and 5:00 p.m.

FOR FURTHER INFORMATION CONTACT: Nicholas M. Inzeo, Deputy Legal Counsel, Thomas J. Schlageter, Assistant Legal Counsel or Stephanie D. Garner, Senior Attorney, at (202) 663–4670 or TDD (202) 663–7026. This notice is also available in the following formats: large print, braille, audio tape and electronic file on computer disk. Requests for this notice in an alternative format should be made to the Publications Center at 1–800–669–3362.

SUPPLEMENTARY INFORMATION: The Equal Employment Opportunity Commission (EEOC) enforces Title VII of the Civil Rights Act of 1964 and Title I of the Americans with Disabilities Act, which prohibit discrimination on the basis of race, color, religion, sex, national origin or disability. Sections 709(c) of Title VII and section 107(a) of the ADA authorize the EEOC to issue recordkeeping and reporting regulations that are deemed reasonable, necessary or appropriate. EEOC has promulgated recordkeeping regulations under those authorities that are contained in 29 CFR 1602. Those regulations do not require the creation of any particular records but generally require employers to preserve any personnel and employment records it makes or keeps for a period of one year. The EEOC seeks extension of these regulations without change.

Collection Title: Recordkeeping and Reporting under Title VII and the ADA.

OMB Control Number: 3046–0040.

Description of Affected Public: Employers with 15 or more employees are subject to Title VII and the ADA.

Responses: 627,000

Reporting Hours: One

Federal Cost: None

Number of Forms: None

Abstract: Section 709(c) of Title VII, 42 U.S.C. 2000e–8(c) and section 107(a) of the ADA, 42 U.S.C. 12117(a) require the Commission to establish regulations pursuant to which employers subject to those Acts shall make and preserve certain records to assist the EEOC in assuring compliance with the Acts' nondiscrimination requirements in employment.

This is a recordkeeping requirement. Any of the records maintained which are subsequently disclosed to the EEOC during an investigation are protected from public disclosure by the confidentiality provisions of section 706(b) and 709(e) of Title VII because they are incorporated by reference into the ADA at section 107(a).

Burden Statement: The EEOC estimates that there will be no increased burden on employers. All employers subject to Title VII are subject to the ADA, and the same EEOC records retention requirements are applicable to both. As all employers with 15 or more employees are already required by the EEOC's Title VII regulations on recordkeeping to maintain the same records, and the extension does not require reports or the creation or maintenance of new documents, there is no increased burden.

Pursuant to the Paperwork Reduction Act of 1995, and OMB regulation 5 CFR 1320.8(d)(1), the Commission solicits public comment to enable it to:

(1) Evaluate whether the proposed collection of information is necessary for the proper performance of the Commission's functions, including whether the information will have practical utility;

(2) Evaluate the accuracy of the Commission's estimate of the burden of the proposed collection of information, including the validity of the methodology and assumptions used;

(3) Enhance the quality, utility, and clarity of the information to be collected; and

(4) Minimize the burden of the collection of information on those who are to respond, including the use of appropriate automated, electronic, mechanical, or other technological collection techniques or other forms of information technology, e.g., permitting electronic submission of responses.

Dated: December 19, 1996.

For the Commission.

Maria Borrero,

Executive Director.

[FR Doc. 96–32743 Filed 12–24–96; 8:45 am]

BILLING CODE 6750–01–M

FEDERAL COMMUNICATIONS COMMISSION

[FCC 96–469]

Procedures for Bell Operating Company Applications Under New Section 271 of the Communications Act

AGENCY: Federal Communications Commission.

ACTION: Notice.

SUMMARY: The Commission has released a Public Notice which establishes various procedural requirements and policies relating to the Commission's processing of Bell operating company applications to provide in-region, interLATA services pursuant to new section 271 of the Communications Act of 1934, as amended, 47 U.S.C. § 271 (Act), Section 271 provides for applications on a State-by-State basis.

FOR FURTHER INFORMATION CONTACT: Florence Grasso, Common Carrier Bureau, Policy and Program Planning Division. (202) 418–1580.

SUPPLEMENTARY INFORMATION:

Paperwork Reduction Act

OMB Control Number: 3060–0756

Expiration Date: 06/30/97

Title: Procedures for Bell Operating Company Applications under New Section 271 of the Communications Act.

Respondents: Business or other for-profit; federal government; and state, local or tribal government.

Public reporting burden for the collection of information is estimated as follows:

Information collection	No. of respondents (approx.)	Annual hour burden per response	Total annual burden
Submission of applications by the BOCs	7	120 hours per application (7 (companies) × 7 (estimated filings each) × 120 (hours)).	5,880
Submission of written consultations by the State Regulatory Commissions.	49	120	5,880
Submission of written consultations by the Department of Justice.	1	4,900 (49 (states) × 100 (hours per state))	4,900

Total Annual Burden: 16,600.

Frequency of Response: One-time, unless an application must be resubmitted.

Estimated Costs Per Respondent: $0.

Needs and Uses: The Commission issued a Public Notice (FCC 96–469) on December 6, 1996 which established various procedural requirements and policies relating to the Commission's processing of Bell operating company applications to provide in-region, interLATA services pursuant to new section 271 of the Communications Act of 1934, as amended, 47 U.S.C. § 271(Act). Section 271 provides for applications on a State-by-State basis.

Synopsis of Public Notice

A. Application Filing Requirements

Applicants must file an original and six copies of each section 271 application. By ''application.'' we mean (1) a stand-alone document entitled Brief in Support of Application by [Bell company name] for Provision of In-Region, InterLATA Services in [State name] and (2) any supporting documentation. The content of both parts of the application is addressed later in this Public Notice.

The Applicant's Brief in Support shall also be submitted on a 3.5 inch computer diskette formatted in WordPerfect 5.1. If electronically available, the supporting documentation must be included on the computer diskette as well. With respect to supporting materials that are not provided on diskette, the applicant should include a note at the end of the electronic version of the Brief in Support indicating that such materials are on file with the Commission. All filings submitted on diskette will be posted on the internet for public inspection at http://www.fcc.gov. We also urge the applicant to post its electronic filings on its own internet home page and to inform us of such posting in the Brief in Support.

If the applicant wants each Commissioner to receive a copy of the section 271 application, the applicant should file an original plus eleven copies. The original, all copies, and the diskette should be sent to the Office of the Secretary, Federal Communications Commission, Washington, D.C. 20554.Applications will be available for public inspection during regular business hours in the Reference Center of the Federal Communications Commission, Room 239, 1919 M Street, N.W., Washington, D.C. 20554. The applicant must also submit a copy of the application simultaneously to (i) the Department of Justice c/o Donald J. Russell, Telecommunications Task Force, Antitrust Division, Room 8205, 555 Fourth Street, NW., Washington, D.C. 20001, (ii) the relevant State regulatory commission, and (iii) the Commission's copy contractor, ITS, Inc., 2100 M Street, N.W., Suite 140, Washington, D.C. 20037, tel. (202) 857–3800.

B. Preliminary Matters

Section 271(d)(3) states that ''[t]he Commission shall not approve the authorization requested in an application * * * unless it finds'' three specified conditions to be met. We expect that a section 271 application, as originally filed, will include all of the factual evidence on which the applicant would have the Commission rely in making its findings thereon. In the event that the applicant submits (in replies or ex parte filings) factual evidence that changes its application in a material respect, the Commission reserves the right to deem such submission a new application and start the 90-day review process anew. All factual assertions made by any applicant (or any commenter) must be supported by credible evidence or will not be entitled to any weight.

Because the statute affords us only 90 days to review the application, we encourage the applicant to meet with likely objectors in order to attempt to narrow the issues in dispute. As noted in Section C of this Public Notice, we require that either the application itself or a supplemental statement filed within five days after the application contain a signed statement that describes efforts that the applicant has made to narrow the issues in dispute and the results of those efforts.

C. Content of Applications

Applications shall conform to the Commission's general rules relating to applications. As noted above, applications shall have two parts: (1) a Brief in Support of Application by [Bell company name] for Provisions of In-Region, InterLATA Services in [State name] and (2) any supporting documentation, such as records of State proceedings, interconnection agreements, affidavits, etc. The Brief in Support may not exceed 100 pages. There is no page limit, however, on supporting documentation.

The Brief in Support should contain the following items:

(a) a table of contents;

(b) a concise summary of the substantive arguments presented in the Brief;

(c) a statement identifying all of the negotiations and/or arbitrations under section 252, including the dates on which the agreements were approved under section 252 and the status of any federal court challenges to the agreements pursuant to section 252(e)(6);

(d) a statement identifying how the applicant meets the requirements of section 271(c)(1), including a list of the specific agreements on which the applicant bases its application if it

intends to rely on a subset of the list set forth in item (c) above;

(e) a statement summarizing the status and findings of the relevant State proceedings (if any) examining the applicant's compliance with section 271 or portions thereof;

(f) a statement describing the efforts the applicant has made to meet with likely objectors to narrow the issues in dispute and the results of those efforts (as indicated above, this statement may be filed separately from the application; but not later than five days after the filing of the application);

(g) all legal and factual arguments that three requirements of section 271(d)(3) have been met, supported as necessary with selected excerpts from the supporting documentation (with appropriate citations) (Item (g) is obviously the core item of the Brief in Support, and may be quite lengthy. It may help to divide it, therefore, into three subsections, one corresponding to each of three requirements set forth in section 271(d)(3));

(h) an Anti-Drug Abuse Act certification as required by 47 CFR § 1.2002; and

(i) an affidavit signed by an officer or duly authorized employee certifying that all information supplied in the application is true and accurate.

The name of the applicant, the date the application is filed, and the State to which it relates should appear in the upper right-hand corner of each page of the Brief in Support.

As for the supporting documentation, we require that it contain, at a minimum, the complete public record, as it exists on the date of filing, of the relevant State proceedings (if any) examining the applicant's compliance with section 271 or portions therof. In addition, supporting documentation, including any records of interconnection agreements, affidavits, etc., shall be provided in appendices, separated by tabs and divided into volumes as appropriate.

D. Comments by Interested Third Parties

After an application has been filed, the Common Carrier Bureau will issue a public notice (Initial Public Notice) establishing the specific due dates for the various filings set forth below. Simultaneously with the issuance of the Initial Public Notice, the Bureau will notify the Department of Justice and the affected State of our receipt of the application. Interested third parties will have approximately 20 days from the issuance of the Initial Public Notice to file comments in opposition or support, which may not exceed 50 pages. The specific due date for comments will be set forth in the Initial Public Notice. The name of the commenter, the name of the applicant, and the State to which the application relates should appear in the upper right-hand corner of each page. Supporting documentation is welcome without page limits. To file comments (or any other filing set forth below) in a section 271 proceeding, commenters need to follow the applicable procedures outlined in section A of this Public Notice.

E. State Commission and Department of Justice Written Consultations

Many State commissions have already commenced proceedings to examine Bell company compliance with section 271 or portions thereof. In light of this fact and in light of the shortness of the 90-day period for deciding a section 271 application, we require that the relevant State commission file any written consultation not later than approximately 20 days after the issuance of the Initial Public Notice. The specific due date for the State's written consultation will be set forth in the Initial Public Notice. The relevant State commission shall also follow the applicable procedures outlined in section A of this Public Notice.

Any written consultation by the Department of Justice (which, by the Act's express terms, must become part of the record) must be filed not later than approximately 35 days after the issuance of the Initial Public Notice. The specific due date for the Department's written consultation will be set forth in the Initial Public Notice. The Department of Justice shall also follow the applicable procedures outlined in section A of this Public Notice.

The State commission and the Department of Justice are also welcome to file a reply pursuant to section F of this Public Notice, as well as written *ex parte* submissions in accordance with section G of this Public Notice.

F. Replies

All participants in the proceeding—the applicant, interested third parties, the relevant State commission, and the Department of Justice—may file a reply to any comment made by any other participant. Such replies are limited to 35 pages and will be due approximately 45 days after the Initial Public Notice is issued. The specific due date for replies will be set forth in the Initial Public Notice. Reply comments may not raise new arguments that are not directly responsive to arguments other participants have raised, nor may the replies be repetitive of arguments made by that party in the application or initial comments. The name of the submitter, the name of the applicant (if different), and the State to which the application relates should appear in the upper right-hand corner of each page. Supporting documentation is welcome without page limits.

G. Ex Parte Rules—Non-Restricted Proceeding

Because of the broad policy issues involved, section 271 application proceedings initially will be considered non-restricted proceedings. Accordingly, *ex parte* presentations will be permitted, provided they are disclosed in conformance with Commission *ex parte* rules. Because of the statutory timeframe, however, we strongly encourage parties to set forth their views comprehensively in the formal filings specified above (e.g., the Brief in Support, oppositions, supporting comments, etc.) and not to rely on subsequent *ex parte* presentations. In any event, parties may not file more than a total of 20 pages of written *ex parte* submissions. This 20-page limit does not include: (1) Written *ex parte* submissions made solely to disclose an oral *ex parte* contact; (2) written material submitted at the time of an oral presentation to Commission staff that provides a brief outline of the presentation; (3) written material filed in response to direct requests from Commission staff; or (4) written factual exhibits. *Ex parte* submissions in excess of the 20-page limit will not be considered part of the record.

For purposes of these proceedings, and in light of the explicit role the Act give to the Department of Justice and the State commissions under section 271, any oral *ex parte* presentations from the Department of Justice and the relevant State commission will be deemed to be exempt *ex parte* presentations. To the extent that we obtain through such oral *ex parte* presentations new factual information on which we may rely in our decision-making process, the party submitting the information (the Department of Justice or the relevant State commission) shall prepare a summary for inclusion in the record in accordance with Commission rules, unless such a summary is being prepared by Commission staff. We also waive any page limits for written *ex parte* submissions by the Department of Justice or the relevant State commission.

Notwithstanding the above, the Commission may, by subsequent public notice, prohibit all communication with Commission personnel regarding the application during a seven-day period preceding the anticipated release date of the Commission's order regarding the

application. On this last point, we note that the notice and comment and effective date provisions of the Administrative Procedure Act are not applicable to these procedural requirements and policies. See 5 U.S.C. § 553 (b), (d).

This Public Notice contains new information collections subject to the Paperwork Reduction Act of 1995. Accordingly, we are presently requesting emergency approval from the Office of Management and Budget for these collections. When the Commission receives such approval, it will issue a Public Notice to that effect, after which the procedural requirements and policies contained herein will become effective.

Federal Communications Commission.

LaVera F. Marshal,

Acting Secretary.

[FR Doc. 96–32762 Filed 12–24–96; 8:45 am]

BILLING CODE 6712–01–P

FEDERAL MARITIME COMMISSION

Ocean Freight Forwarder License; Applicants

Notice is hereby given that the following applicants have filed with the Federal Maritime Commission applications for licenses as ocean freight forwarders pursuant to section 19 of the Shipping Act of 1984 (46 U.S.C. app. 1718 and 46 CFR 510).

Persons knowing of any reason why any of the following applicants should not receive a license are requested to contact the Office of Freight Forwarders, Federal Maritime Commission, Washington, D.C. 20573.

MAS & E Company, 350 S. Crenshaw Blvd., Suite A 202, Torrance, CA 90503

Officers: Marie L. Park, President; James Bong-Ik Park, Vice President

Edward Mittelstaedt, Inc., 55 Margarita Drive, San Rafael, CA 94901

Officer: Edward O. Mittelstaedt, President

K.A.K. LLC, 1507 South Olive Street, South Bend, IN 46619

Officers: Kenneth A. Kanczuzewski, Partner; Thomas E. Kanczuzewski, Partner.

Dated: December 19, 1996.

Joseph C. Polking,

Secretary.

[FR Doc. 96–32628 Filed 12–24–96; 8:45 am]

BILLING CODE 6730–01–M

FEDERAL RESERVE SYSTEM

Formations of, Acquisitions by, and Mergers of Bank Holding Companies

The companies listed in this notice have applied to the Board for approval, pursuant to the Bank Holding Company Act of 1956 (12 U.S.C. 1841 *et seq.*) (BHC Act), Regulation Y (12 CFR Part 225), and all other applicable statutes and regulations to become a bank holding company and/or to acquire the assets or the ownership of, control of, or the power to vote shares of a bank or bank holding company and all of the banks and nonbanking companies owned by the bank holding company, including the companies listed below.

The applications listed below, as well as other related filings required by the Board, are available for immediate inspection at the Federal Reserve Bank indicated. Once the application has been accepted for processing, it will also be available for inspection at the offices of the Board of Governors. Interested persons may express their views in writing on the standards enumerated in the BHC Act (12 U.S.C. 1842(c)). If the proposal also involves the acquisition of a nonbanking company, the review also includes whether the acquisition of the nonbanking company complies with the standards in section 4 of the BHC Act, including whether the acquisition of the nonbanking company can ''reasonably be expected to produce benefits to the public, such as greater convenience, increased competition, or gains in efficiency, that outweigh possible adverse effects, such as undue concentration of resources, decreased or unfair competition, conflicts of interests, or unsound banking practices'' (12 U.S.C. 1843). Any request for a hearing must be accompanied by a statement of the reasons a written presentation would not suffice in lieu of a hearing, identifying specifically any questions of fact that are in dispute, summarizing the evidence that would be presented at a hearing, and indicating how the party commenting would be aggrieved by approval of the proposal. Unless otherwise noted, nonbanking activities will be conducted throughout the United States.

Unless otherwise noted, comments regarding each of these applications must be received at the Reserve Bank indicated or the offices of the Board of Governors not later than January 21, 1997.

A. Federal Reserve Bank of Philadelphia (Michael E. Collins, Senior Vice President) 100 North 6th Street, Philadelphia, Pennsylvania 19105:

1. Fulton Financial Corporation, Lancaster, Pennsylvania; to acquire 100 percent of the voting shares of The Woodstown National Bank & Trust Company, Woodstown, New Jersey.

B. Federal Reserve Bank of Atlanta (Zane R. Kelley, Vice President) 104 Marietta Street, N.W., Atlanta, Georgia 30303:

1. The Colonial BancGroup, Inc., Montgomery, Alabama; to merge with Shamrock Holding, Inc., Evergreen, Alabama, and thereby indirectly acquire The Union Bank, Evergreen, Alabama.

C. Federal Reserve Bank of Minneapolis (Karen L. Grandstrand, Vice President) 250 Marquette Avenue, Minneapolis, Minnesota 55480:

1. BankWest Financial, Kalispell, Montana; to become a bank holding company by acquiring 100 percent of the voting shares of BankWest, National Association, Kalispell, Montana.

Board of Governors of the Federal Reserve System, December 19, 1996.

Jennifer J. Johnson,

Deputy Secretary of the Board.

[FR Doc. 96–32741 Filed 12–24–96; 8:45 am]

BILLING CODE 6210–01–F

Notice of Proposals to Engage in Permissible Nonbanking Activities or to Acquire Companies that are Engaged in Permissible Nonbanking Activities

The companies listed in this notice have given notice under section 4 of the Bank Holding Company Act (12 U.S.C. 1843) (BHC Act) and Regulation Y, (12 CFR Part 225) to engage *de novo*, or to acquire or control voting securities or assets of a company that engages either directly or through a subsidiary or other company, in a nonbanking activity that is listed in § 225.25 of Regulation Y (12 CFR 225.25) or that the Board has determined by Order to be closely related to banking and permissible for bank holding companies. Unless otherwise noted, these activities will be conducted throughout the United States.

Each notice is available for inspection at the Federal Reserve Bank indicated. Once the notice has been accepted for processing, it will also be available for inspection at the offices of the Board of Governors. Interested persons may express their views in writing on the question whether the proposal complies with the standards of section 4 of the BHC Act, including whether consummation of the proposal can ''reasonably be expected to produce benefits to the public, such as greater convenience, increased competition, or gains in efficiency, that outweigh possible adverse effects, such as undue

concentration of resources, decreased or unfair competition, conflicts of interests, or unsound banking practices'' (12 U.S.C. 1843). Any request for a hearing on this question must be accompanied by a statement of the reasons a written presentation would not suffice in lieu of a hearing, identifying specifically any questions of fact that are in dispute, summarizing the evidence that would be presented at a hearing, and indicating how the party commenting would be aggrieved by approval of the proposal.

Unless otherwise noted, comments regarding the applications must be received at the Reserve Bank indicated or the offices of the Board of Governors not later than January 10, 1997.

A. Federal Reserve Bank of Atlanta (Zane R. Kelley, Vice President) 104 Marietta Street, N.W., Atlanta, Georgia 30303:

1. Compass Bancshares, Inc., Birmingham, Alabama; Compass Banks of Texas, Inc., Birmingham, Alabama; Compass Bancorporation of Texas, Inc., Wilmington, Delaware; to acquire Horizon Bancorp, Inc., Austin, Texas, and Horizon Bank & Trust, SSB, Austin, Texas, and thereby engage in operating a savings association, pursuant to § 225.25(b)(9) of the Board's Regulation Y. These activities will be conducted throughout the State of Texas.

Board of Governors of the Federal Reserve System, December 19, 1996.

Jennifer J. Johnson,

Deputy Secretary of the Board.

[FR Doc. 96–32742 Filed 12–24–96; 8:45 am]

BILLING CODE 6210–01–F

[Docket No. R–0953]

Fair Credit Reporting

AGENCY: Board of Governors of the Federal Reserve System (Board).

ACTION: Notice; request for comments.

SUMMARY: The Board solicits comment on issues to be addressed in a study concerning the public availability and use of social security numbers and other sensitive identifying information about consumers. The Board's study is required by the Economic Growth and Regulatory Paperwork Reduction Act of 1996.

DATES: Comments must be received on or before January 31, 1997.

ADDRESSES: Comments should refer to Docket No. R–0953, and may be mailed to William W. Wiles, Secretary, Board of Governors of the Federal Reserve System, 20th Street and Constitution Avenue, N.W., Washington, DC 20551. Comments also may be delivered to Room B–2222 of the Eccles Building between 8:45 a.m. and 5:15 p.m. weekdays, or to the guard station in the Eccles Building courtyard on 20th Street, N.W. (between Constitution avenue and C Street) at any time. Comments may be inspected in Room MP–500 of the Martin Building between 9:00 a.m. and 5:00 p.m. weekdays, except as provided in 12 CFR 261.8 of the Board's rules regarding the availability of information.

FOR FURTHER INFORMATION CONTACT: Jane Jensen Gell or Sheilah Goodman, Staff Attorneys, Division of Consumer and Community Affairs, at (202) 452–2412 or (202) 452–3667; for users of Telecommunications Device for the Deaf (TDD) *only,* please contact Dorothea Thompson at (202) 452–3544.

SUPPLEMENTARY INFORMATION:

I. Background

On September 30, 1996, the President signed into law the Economic Growth and Paperwork Reduction Act of 1996 (Pub. L. 104–208, 110 Stat. 3009) (the 1996 Act). The 1996 Act amends several consumer credit laws, including the Fair Credit Reporting Act (FCRA) (15 U.S.C. 1681). An amendment to the FCRA directs the Board of Governors of the Federal Reserve System (Board), in consultation with the Federal Trade Commission (the Commission) and the federal financial regulatory agencies, to conduct a study to determine the availability to the public of sensitive identifying information about consumers, the possibility that such information could be used for financial fraud, and the potential for fraud or risk of loss, if any, to insured depository institutions. By March 31, 1997, the Board must report the results of the study to the Congress, including any suggestions for legislative change. The Board solicits the comment of interested parties on these issues. The comments received will be used in the Board's study. Because of the short time frame the Congress gave the Board to study this matter, all comments must be received by January 31, 1997.

II. Availability of Sensitive Consumer Information

The Congress became concerned about the availability of sensitive identifying information about consumers after a widely-publicized incident in which a large database service offered personal information for sale—including individuals' social security numbers— from one of its electronic databases. After a few days, the service discontinued the practice of making social security numbers available but continued to permit users to search for information by social security number. At about the same time, members of Congress learned of situations in which such identifying information was being used for financial fraud. In addition, testimony at a recent Federal Trade Commission hearing highlighted how easy it is to obtain identifying information about a consumer and to use that information to fraudulently receive credit in the consumer's name—without the knowledge of the consumer or the credit granting institution. This practice is often referred to as ''identity theft.'' Armed with such information, criminals can request and receive credit or negotiate checks in the consumer's name, with devastating results for the consumer.

Sometimes identity theft begins with the use of publicly available information. A government employee who participated in the Commission hearings related such an incident. General information about this witness was listed in a publicly-available government directory. Using that information, an unknown individual was able to obtain a copy of the employee's college transcript, which showed his social security number. The individual was able subsequently to get a copy of the employee's birth certificate using the social security number. The thief then had all he needed to ''assume'' the employee's identity and use the information to commit fraud.

III. Request for Comment

In response to concerns about the availability of identifying information about consumers, and anecdotal evidence suggesting an increase in identity theft and financial fraud, the Congress has directed the Board to conduct a study regarding the availability to the public of sensitive information used to identify consumers. The Board is to determine whether there are organizations ''engaged in the business of making sensitive consumer identification information, including social security numbers, mothers' maiden names, prior addresses and dates of birth, available to the general public.'' To help make this determination, the Board solicits comment on the following issues:

1. What is or should be considered sensitive consumer information for purposes of the study?

2. What information is currently used, or might be used in the future, to identify individuals, and what types of public or private organizations, repositories, or databases make such

information available to certain entities or to the general public?

3. How is the information obtained (for example, by phone, through the mail, or on the Internet), what costs are associated with obtaining the information, what are the specific uses for which the information is obtained, and does the furnisher place any restrictions on the distribution or use of this information on the purchaser? If so, how does the furnisher ensure that use of the data is limited to its intended purposes?

4. Is the compilation, sale, and use of sensitive identifying information about consumers subject to industry guidelines or regulations, and if not, what guidelines, regulatory or legal requirements might be appropriate?

If sensitive information about consumers is available, the Board must determine whether the availability of the information creates ''undue potential for fraud and risk of loss to insured depository institutions.'' In order to make this assessment, the Board seeks comment on the following issues:

5. How is sensitive identifying information about consumers used for financial fraud (for example, to obtain a credit card in another person's name)?

6. What types of identifying information about consumers are most meaningful in granting and verifying credit, and how can consumers, financial institutions, and others control the fraudulent use of this information?

7. What magnitude of financial loss do institutions attribute to fraudulent use of consumer information?

Finally, if the Board determines that additional laws are needed to lessen the risks of fraud and loss to the banking system, the Board is directed to make legislative recommendations to the Congress. Accordingly, the Board is seeking comment on the following issues:

8. What, if any, legislative changes should be considered to help protect sensitive identifying information about consumers?

9. What, if any, legislative changes should be considered to limit the use of such information and reduce the risk of fraud or other loss to the banking system?

IV. Form of Comment Letters

Comment letters should refer to Docket No. R–0953, and, when possible, should use a standard courier typeface with a type size of 10 or 12 characters per inch. This will enable the Board to convert the text to machine-readable form through electronic scanning, and will facilitate automated retrieval of comments for review. Also, if accompanied by an original document in paper form, comments may be submitted on 3½ inch or 5¼ inch computer diskettes in any IBM-compatible DOS-based format.

By order of the Board of Governors of the Federal Reserve System, December 17, 1996.

William W. Wiles,

Secretary of the Board.

[FR Doc. 96–32495 Filed 12–24–96; 8:45 am]

BILLING CODE 6210–01–P

DEPARTMENT OF HEALTH AND HUMAN SERVICES

Administration for Children and Families

Regional Offices; Statement of Organization, Functions, and Delegations of Authority

This notice amends Part K of the Statement of Organization, Functions, and Delegations of Authority of the Department of Health and Human Services (DHHS), Administration for Children and Families (ACF) as follows: Chapter KD, The Regional Offices of the Administration for Children and Families (61 FR 50029), as last amended, September 24, 1996. This Notice reflects the organizational changes for Regions 4, 8 and 9 and the reorganizations for Region 3 and X.

I. Amend Notice 61 FR 50029, dated September 24, 1996, Roman numeral I, 13th line to read ''amended, May 1, 1995.''

II. Amend Chapter KD as follows:

a. KD.10 Organization. Delete in its entirety and replace with the following:

KD.10 Organization. Regions 4, 8 and 9 are organized as follows:

Office of the Regional Administrator (KD8A)
Office of the Regional Hub Director (KD4A and KD9A)
Office of Financial Operations (KD4B, KD8B and KD9B)
Office of Family Security (KD4C, KD8C and KD9C)
Office of Family Supportive Services (KD4D, KD8D and KD9D)

b. KD.20 Functions. Delete Paragraph A in its entirety and replace with the following:

KD.20 Functions (For Region 8). A. The Office of the Regional Administrator is headed by a Regional Administrator who reports to the Assistant Secretary for Children and Families. In addition, the Office of the Regional Administrator has a Deputy Regional Administrator who reports to the Regional Administrator. The Office provides executive leadership and direction to state, county, city, territorial and tribal governments, as well as public and private local grantees to ensure effective and efficient program and financial management. It ensures that these entities conform to federal laws, regulations, policies and procedures governing the programs, and exercises all delegated authorities and responsibilities for oversight of the programs. The Office takes action to approve the state plans and submits recommendations to the Assistant Secretary for Children and Families concerning state plan disapproval.

The Office contributes to the development of national policy based on regional perspectives on all ACF programs. It oversees ACF operations, the management of ACF regional staff; coordinates activities across regional programs; and assures that goals and objectives are met and departmental and agency initiatives are carried out. The Office alerts the Assistant Secretary for Children and Families to problems and issues that may have significant regional or national impact. It represents ACF at the regional level in executive communications within ACF, with the HHS Regional Director, other HHS operating division, other federal agencies, and public or private local organizations representing children and families.

Within the Office of the Regional Administrator, an Administrative staff assists the Regional Administrator and Deputy Regional Administrator in providing day-to-day support for regional administrative functions, including budget, internal systems, employees relations, and human resource development activities. The Staff develops and implements the regional planning process. It tracks, monitors and reports on regional progress in the attainment of ACF national goals and objectives. The Staff coordinates public awareness activities, information and education campaign in accordance with the ACF Office of Public Affairs and in conjunction with the HHS Regional Director. It assists the Regional Administrator in management of cross-cutting initiatives and activities among the regional components, and ensures effective and efficient management of internal automation processes.

c. After the end of KD2.20 Functions (60 FR 21211, 05/01/95), Paragraph D, and before KD5.10 Organization (60 FR 34284, 06/30/95), insert the following:

KD3.10 Organization. The Administration for Children and Families, Region 3, is organized as follows: Office of the Regional

Administrator (KD3A) Office of Program and Administrative Support (KD3B) Office of Family Services (KD3C) Office of Child Development and Developmental Disabilities (KD3D).

KD3.20 Functions. A. The Office of the Regional Administrator is headed by a Regional Administrator. The Office provides executive leadership and directives to state, county, city, territorial and tribal governments, as well as public and private local grantees to ensure effective and efficient program and financial management. It ensures that these entities conform to federal laws, regulations, policies and procedures governing the programs, and exercises all delegated authorities and responsibilities for oversight of the programs.

The Office takes action to approve state plans and submits recommendations to the Assistant Secretary for Children and Families concerning state plan disapproval, where applicable. The Office contributes to the development of national policy based on perspectives on all ACF programs. It oversees ACF operations and the management of ACF regional staff; coordinates activities across regional programs; and assures that goals and objectives are met and departmental and agency initiatives are carried out. The Office alerts the Assistant Secretary for Children and Families to problems and issues that may have significant regional or national impact. The Office represents ACF at the regional level in executive communications without ACF, with the HHS Regional Director, other HHS operating divisions, other federal agencies, and public or private local organizations representing children and families.

B. The Office of Program Administrative Support is headed by an Assistant Regional Administrator who reports to the Regional Administrator. The Office assists the Regional Administrator in providing day-to-day support for regional administrative functions, including budget, performance management, procurement, property management, financial management, external and internal systems, statistical analysis, employee relations and human resource development activities.

The Office provides expertise in business and other non-programmatic areas of grant administration and helps ensure that states and grantees fulfill requirements of law, regulations and administrative policies. It establishes regional financial management priorities. The Office provides cost allocation and financial support to the Office of Family Services and the Office of Child Development and Developmental Disabilities.

The Office oversees the management and coordination of automated systems in the region, and provides data management and statistical analysis support to all Regional Office components. Data management responsibilities include the development of automated system applications to support and enhance program, fiscal, administrative and quality control operations, and the compilation and analysis of data on demographic and service trends that assist in monitoring and oversight responsibilities. Statistical analysis functions include the review of state and federal sampling procedures. The Office is responsible for the effective and efficient management of internal ACF automation processes and for oversight of state systems projects for ACF programs.

In coordination with other Regional Office components, it monitors state systems projects and is the focal point for technical assistance to states and grantees on the development and enhancement of automated systems. The Office represents the Regional Administrator on administrative matters and on internal and State systems matters with ACF central office, states, contractors and grantees. It alerts the Regional Administrator to problems or issues that have significant implications for functional areas under its jurisdiction.

C. The Office of Family Services is headed by an Assistant Regional Administrator who reports to the Regional Administrator. The Office is responsible for providing centralized management, financial management services, and technical administration of ACF formula, block and entitlement programs such as Aid to Families with Dependent Children (AFDC), Child Support Enforcement (CSE), Job Opportunities and Basic Skills Training (JOBS). Foster Care and Adoption Assistance, Child Welfare, Family Preservation and Support Services, Child Abuse and Neglect and the discretionary Runaway and Homeless Youth Program.

The Office provides policy guidance to state, county, city or town and tribal governments and public and private organizations to assure consistent and uniform adherence to federal requirements governing formula and entitlement programs. State plans are reviewed and recommendations concerning state plan approval or disapproval are made to the Regional Administrator. The Office provides technical assistance to entities responsible for administering these programs resolve identified problems, ensures that appropriate procedures and practices are adopted, monitors the program to ensure their efficiency and effectiveness, establishes regional financial management priorities and reviews cost allocation plans, and monitors state systems projects for the CSE, AFDC, Child Welfare, and JOBS programs.

The Office provides financial management services for ACF formula and entitlement grants in the region as well as for the Runaway and Homeless Youth Program which is a discretionary grant. The Office issues discretionary grant awards based on a review of project objectives, budget projections, and proposed funding levels. The Office also reviews cost estimates and reports for ACF entitlement and formula grant programs and recommends funding levels. The Office performs systematic fiscal reviews and makes recommendations to the Regional Administrator to approve, defer or disallow claims for federal financial participation in ACF formula and entitlement grant programs. As applicable, recommendations are made on the clearance and closure of audits, paying particular attention to financial management deficiencies that decrease the efficiency and effectiveness of the ACF programs and taking steps to monitor the resolution of such deficiencies. The Office represents the Regional Administrator in dealing with the ACF Program Offices on all program and financial policy matters under its jurisdiction. Alerts or early warnings are provided to the Regional Administrator regarding problems or issues that may have significant implications for the programs.

D. The Office of Child Development and Developmental Disabilities is headed by an Assistant Regional Administrator who reports to the Regional Administrator. The Office is responsible for providing centralized management, financial management services, and technical administration of ACF discretionary and formula grant programs such as Head Start, Child Care and Developmental Disabilities programs.

In that regard, the Office provides policy guidance to state, county, city or town and tribal governments and public and private organizations to assure consistent with uniform adherence to federal requirements. The Office provides technical assistance to entities responsible for administering these programs to ensure that appropriate procedures and practices are adopted,

and monitors the programs to ensure their efficiency and effectiveness.

The Office performs systematic fiscal reviews; makes recommendations to the Regional Administrator to approve or disallow costs under ACF discretionary grant programs; and makes recommendations to the Regional Administrator concerning state plan approval or disapproval, as applicable. The Office issues discretionary grant awards based on a review of project objectives, budget projections, and proposed funding levels. As applicable, recommendations are made on the clearance and closure of audits of grantee programs, paying particular attention to financial management deficiencies that decrease the efficiency and effectiveness of the ACF programs and taking steps to monitor the resolution of such deficiencies. The Office oversees the management and coordination of office automation systems in the region such as the PC Cost and HS Cost systems for budget analysis on Head Start Applications and monitors grantee systems projects such as the Head Start Program Information Report, Head Start Management Tracking System and the Head Start Bulletin Board. The Office represents the Regional Administrator in dealing with ACF program offices on all program policy and financial matters under its jurisdiction. Alerts or early warnings are provided to the Regional Administrator regarding problems or issues that may have significant implications on the programs.

d. After the end of KD7.20 Functions (61 FR 3937, 02/02/96), Paragraph D, insert the following:

KDX.10 Organization. The Administration for Children and Families, Regional X, is organized as follows: Management Team (KDXA) Service Delivery Teams (KDXE) Support Teams (KDXF)

KDX.20 Functions. A. The Management Team consists of the Regional Administrator, a Deputy Regional Administrator, and three Supervisory Program Specialists who report directly to the Deputy. In addition to being a team member, the Regional Administrator is responsible for alerting the Assistant Secretary for Children and Families to problems and issues that may have significant regional or national impact.

The Team provides executive leadership to state, county, city, and tribal governments, as well as public and private local grantees to ensure effective, efficient, results-oriented program and financial management. ACF's primary goal is to assist vulnerable and dependent children and families to achieve economic independence, stability, and self-reliance. The Team partners with state, local, and tribal organizations to promote adherence to federal laws, regulations, policies and procedures governing the programs, and exercises all delegated authorities and responsibilities for oversight of the programs. The Team takes action to approve state and tribal plans and submits recommendations to the Assistant Secretary for Children and Families concerning plan disapproval.

The Team contributes to the development of national policy based on regional perspectives on all ACF programs. It oversees ACF operations; manages ACF regional staff; coordinates activities across regional programs; and assures that goals and objectives are met and departmental and agency initiatives are carried out.

The Team represents ACF at the regional level in executive communications within ACF, the HHS Regional Director, other HHS operating divisions, other federal agencies, Tribal and Native American Organizations, and public or private local organizations representing children and families.

In order to ensure that agency goals are accomplished, the Management Team provides leadership to grantees through a staff organized in Service Delivery Teams. ACF programs and functions are grouped within teams according to current ACF programs and/or initiatives. Each team is charged with achieving measurable progress towards ACF goals through their work with state, local, and tribal grantees, the public, other federal agencies, and internally within the Department. The regional team structure is designed to allow ACF to respond quickly in a dynamic and changing environment to achieve ACF and HHS goals.

B. The Service Delivery Teams (SDTs) report directly to the Management Team. The SDTs are responsible for providing centralized management and technical administration of ACF formula, block, discretionary, and entitlement grants and programs to assist families achieve economic independence and self-sufficiency, and to promote safe, healthy, and permanent environments in which children can grow. The SDTs review and recommend approval or disapproval of State and tribal plans to the Management Team. SDTs recommend issuance of certain grant awards based on a review of project objectives, budget projections, and proposed funding levels.

The SDTs provide policy guidance to state, local, and tribal governments, and public and private organizations to foster consistent and uniform adherence to federal requirements governing formula, block, and entitlement programs. The SDTs provide technical assistance to states, grantees, and tribes to resolve identified problems; ensure that appropriate procedures and practices are adopted; develop and implement outcome-based performance measures; and to monitor the programs to ensure their efficiency and effectiveness.

The SDTs represent the Management Team in dealing with the ACF Program Offices on all program and policy matters under their jurisdiction. Alerts or early warnings are provided to the Management Team regarding problems or issues that may have significant implications for the programs.

C. The Support Teams provide administrative and management support to the Regional Administrator and Management Team. Members of the Support Teams report directly to the Regional Administrator or a member of the Management Team. Functions within the Team include day-to-day operational management of regional administrative functions such as, budget, performance management, procurement, property management, employee relations, human resource development activities, planning and coordination, and office automation systems.

The Team includes experts in cash assistance and supportive services programs who serve as resources to all teams on issues which cross-cut the organization, such as legislative policy up-dates, partnership agreements, result measurements, policy guidance, and monitoring state systems projects for ACF programs.

Team members also provide leadership in regional financial management matters to the Service Delivery Teams and the Management Team, including reviewing cost estimates and reports for ACF grant programs, recommending funding levels, and performing systematic fiscal reviews. Approve grant awards based on a review of project objectives, budget projections, and approved funding plans. Provide funds accounting for discretionary grant programs. Establish regional financial management priorities and review cost allocation plans.

Dated: December 18, 1996.

Olivia A. Golden,

Acting Assistant Secretary for Children and Families.

[FR Doc. 96–32744 Filed 12–24–96; 8:45 am]

BILLING CODE 4184–01–M

Agency Information Collection Activities: Proposed Collection: Comment Request

In compliance with the requirement of section 3506(c)(2)(A) of the Paperwork Reduction Act of 1995, the Health Care Financing Administration (HCFA), Department of Health and Human Services, has submitted to the Office of Management and Budget (OMB) the following proposals for the collection of information. Interested persons are invited to send comments regarding this burden estimate or any other aspect of this collection of information, including any of the following subjects: (1) The necessity and utility of the proposed information collection for the proper performance of the agency's functions; (2) the accuracy of the estimated burden; (3) ways to enhance the quality, utility, and clarity of the information to be collected; and (4) the use of automated collection techniques or other forms of information technology to minimize the information collection burden.

1. *Type of Request:* Revision of a currently approved collection; *Title of Information Collection:* Medicaid Management Information System (MMIS); *Form No.:* HCFA–R–0004; *Use:* The Medicaid Management Information System (MMIS) is a State-operated, Federally mandated computer system used for automated Medicaid claims processing and information retrieval for program management. Data elements represent the Federally imposed recordkeeping requirements of MMIS; Frequency: Annually; *Affected Public:* Business or other for profit; State, local, or tribal government; *Number of Respondents:* 50; *Total Annual Responses:* 50; *Total Annual Hours:* 2,206,250.

To request copies of the proposed paperwork collection referenced above, E-mail your request, including your address, to Paperwork@hcfa.gov, or call the Reports Clearance Office on (410) 786–1326. Written comments and recommendations for the proposed information collections should be sent within 60 days of this notice directly to the HCFA Paperwork Clearance Officer designated at the following address: HCFA, Office of Financial and Human Resources, Management Analysis and Planning Staff, Attention: Linda Mansfield Room C2–26–17, 7500 Security Boulevard, Baltimore, Maryland 21244–1850.

Dated: December 17, 1996.

Edwin J . Glatzel,

Director, Management Analysis and Planning Staff, Office of Financial and Human Resources, Health Care Financing Administration.

[FR Doc. 96–32823 Filed 12–24–96; 8:45 am]

BILLING CODE 4120–03–P

DEPARTMENT OF HOUSING AND URBAN DEVELOPMENT

[Docket No. FR–4120–N–03]

Assessment of the Reasonable Revitalization Potential of Certain Public Housing Required by Law; Amendment to Timeframes

AGENCY: Office of the Assistant Secretary for Public and Indian Housing, HUD.

ACTION: Notice.

SUMMARY: On September 26, 1996, the Department published a notice which implements section 202 of the Omnibus Consolidated Rescissions and Appropriations Act of 1996. Section 202 requires PHAs to identify certain distressed public housing developments that will be required to be replaced with tenant-based assistance if they cannot be revitalized by any reasonable means. In that eventuality, households in occupancy would be offered tenant-based or project-based assistance and would be relocated—if sufficient housing will not be maintained, rehabilitated, or replaced on the current site—to other decent, safe, sanitary, and affordable housing which is, to the maximum extent practicable, housing of their choice. This notice amends the timeframes that the Department set in the September 26, 1996 notice for accomplishing the standards necessary for compliance with section 202. The timeframes are being amended because comments on the September 26, 1996 notice were due by November 25, 1996, and the Department wishes to (1) adequately respond to all comments and (2) give PHAs sufficient time to comply with the Section 202 requirements, including any revisions. PHAs should position themselves to respond in a timely manner by beginning to collect the necessary data. The same data is likely to be required in order to comply with Section 202, regardless of any possible changes to the notice. Except for the amendments to the timeframes made by this notice, all of the requirements of the September 26, 1996 notice continue to be in effect.

EFFECTIVE DATE: December 26, 1996.

FOR FURTHER INFORMATION CONTACT: Rod Solomon, Senior Director for Policy and Legislation, Public and Indian Housing, Room 4116, Department of Housing and Urban Development, 451 7th Street, SW, Washington, DC 20410, telephone (202) 708–0713. For hearing or speech impaired persons, this number may be accessed via TTY by contacting the Federal Information Relay Service at 1–800–877–8339.

SUPPLEMENTARY INFORMATION: General Requirement and Scope

Section 202 of the Omnibus Consolidated Rescissions and Appropriations Act of 1996 (Pub.L. 104–134, 110 STAT. 1321–279, 42 U.S.C. 1437l note) (''OCRA'') requires PHAs to identify certain distressed public housing developments that will be required to be addressed. Households in occupancy would be offered tenant-based or project-based assistance (that can include other public housing units) and would be relocated—if sufficient housing will not be maintained, rehabilitated, or replaced on the current site—to other decent, safe, sanitary, and affordable housing which is, to the maximum extent practicable, housing of their choice. After residents are relocated, the distressed developments (or affected buildings) for which no reasonable means of revitalization exists will be removed from the public housing inventory.

On September 26, 1996, at 61 FR 50632, the Department published a notice to implement section 202 of OCRA. The notice established the standards for conducting the assessments and the conversion plan. It also set forth certain timeframes for meeting those standards. This notice amends the timeframes set in that notice in order to be equitable to all of the housing authorities that will be assessed. The following new deadlines for submissions to HUD field offices, therefore, are scheduled:

Accomplish Standards A to C by January 31, 1997
(was December 29, 1996)

Accomplish Standard D by March 31, 1997
(was December 29, 1996)

Accomplish Standard E by June 30, 1997
(was February 27, 1997)

Submit conversion plan by September 26, 1997
(was August 26, 1997)

fFor clarification of the provision in the September 26, 1996 notice regarding the PHAs' requirement to develop their plans in consultation with affected public housing residents, PHAs should

provide, as an initial step, copies of their submissions for Standards A to C to the appropriate tenant councils and resident groups before or immediately after these submissions are provided to HUD.

Dated: December 19, 1996.

Michael B. Janis,

General Deputy Assistant Secretary for Public and Indian Housing.

[FR Doc. 96–32768 Filed 12–20–96; 12:32 pm]

BILLING CODE 4210–33–P

DEPARTMENT OF THE INTERIOR

Office of the Secretary

California Desert District Advisory Council; Renewal

AGENCY: Bureau of Land Management, Interior.

ACTION: California Desert District Advisory Council—notice of renewal.

SUMMARY: This notice is published in accordance with Section 9(a)(2) of the Federal Advisory Committee Act of 1972 Public Law 92–463. Notice is hereby given that the Secretary of the Interior has renewed the Bureau of Land Management's (BLM) California Desert District Advisory Council.

The purpose of the Council is to provide counsel and advice to the BLM District Manager concerning planning and management of the public land resources within the BLM California Desert District and implementation of the comprehensive, long-range plan for the management, use, development, and protection of the public lands within the California Desert Conservation Area.

FOR FURTHER INFORMATION CONTACT: Melanie Wilson, Intergovernmental Affairs (600), Bureau of Land Management, 1620 L Street, N.W., Room 1050, Washington, D.C. 20240, telephone (202) 452–0377 or (202) 208–7701.

Dated: December 9, 1996.

Bruce Babbitt,

Secretary of the Interior.

[FR Doc. 96–32827 Filed 12–24–96; 8:45 am]

BILLING CODE 4310–84–P

Fish and Wildlife Service

Endangered and Threatened Species Permit Applications

ACTION: Notice of receipt of applications.

SUMMARY: The following applicants have applied for a permit to conduct certain activities with endangered species. This notice is provided pursuant to section 10(c) of the Endangered Species Act of 1973, as amended (16 U.S.C. 1531, *et seq.*).

Permit No. 820730

Applicant: Robert Sivinski, Santa Fe, New Mexico

The applicant requests a permit to collect new populations of all federally listed plant species that potentially occur in New Mexico for the purposes of resource management and plant conservation.

Permit No. PRT–821356

Applicant: Dr. Lawrence E. Stevens, Flagstaff, Arizona

The applicant requests a permit to conduct laboratory and field monitoring studies and collect the Kanab ambersnail (*Oxyloma haydeni kanabensis*) as eggs in egg masses in Grand Canyon National Park and vicinity.

Permit No. 821369

Applicant: Rhonda Sidner, Tucson, Arizona

The applicant requests a permit to conduct presence/absence surveys of lesser long-nosed bats (*Leptonycteris curasoae*) on Ft. Huachuca, Arizona.

Permit No. 821577

Applicant: Duane Shroufe, Arizona Game and Fish Department, Phoenix, Arizona. The applicant requests a permit to allow take of a voucher specimen of the New Mexico ridgenose rattlesnake (*Crotalus willardi obscurus*) from the Peloncillo Mountains, Cochise County, Arizona for the purpose of documenting occurrence of this taxon in the state of Arizona. Applicant also requests a permit to take any resident endangered/threatened fish or wildlife listed below for conservation purposes, provided: (1) the taking is not reasonably anticipated to result in death or permanent disabling of the specimen; (2) the speciment is not removed from the State of Arizona without prior written permission from the U.S. Fish and Wildlife Service; or (3) the live specimen is not held in captivity for more than 45 consecutive days.

Birds

peregrine falcon (*Falco peregrinus*)
aplomado falcon (*Falco femoralis*)
Yuma clapper rail (*Rallus longirostris yumanensis*)
masked bobwhite (*Collinus virginianus*
bald eagle (*Haliaeetus leucocephalus*)
southwestern willow flycatcher (*Empidonax trillii extimus*)
Mexican spotted owl (*Strix occidentalis*)

Fish

bonytail chub (*Gila elegans*)
humpback chub (*G. cypha*)
yaqui chub (*G. purpurea*)
Virgin River chub (*G. robusta seminuda*)
desert pupfish (*Cyprinodon macularius macularius*)
Quitobaquito pupfish (*C. m. eremus*)
Colorado squawfish (*Ptychocheilus lucius*)
Gila topminnow (*Poeciliopsis occidentalis*)
Gila trout (*Oncorhynchus gilae*)
woundfin (*Plagopterus argentissimus*)
razorback sucker (*Xyrauchen texanus*)

Reptiles

desert tortoise (*Gopherus agassizii*)

Mammals

lesser long-nosed bat (*Leptoncyteris curasoae*)
black-footed ferret (*Mustela nigripes*)
Mount Graham red squirrel (*Tamiasciurus hudsonicus*)
Hualapai Mexican vole (*Microptus mexicanus*)
jaguarundi (*Felis yagouaroundi*)
ocelot (*F. Paradalis*)
Mexican gray wolf (*Canis lupus bailey*)
Sonoran pronghorn (*Antilocapra americana sonoriensis*)

Invertebrates

Kanab ambersnail (Oxyloma haydeni kanabensis)

Permit No. 821901

Applicant: Robert Tafanelli, Las Cruces, New Mexico

The applicant requests a permit to conduct presence/absence surveys of the aplomado falcon and bald eagle in southwestern New Mexico south of Socorro and west of but including the Sacramento and Guadalupe Mountains.

Permit No. 820062

Applicant: Don Blanton, Hicks & Company, Inc., Austin, Texas

The applicant requests permission to conduct surveys throughout the ranges of the following for scientific and recovery purposes when necessary:

Invertebrates

Tooth Cave pseudoscorpion (*Microcreagris texana*)
Tooth Cave spider (*Neoleptoneta myopica*)
Tooth Cave ground beetle (*Rhadine persephone*)
Kretschmarr Cave mold beetle (*Texamaurops reddelli*)
Bee Creek Cave harvestman (*Texella reddelli*)
Bone Cave harvestman (*Texella reyesi*)
Coffin Cave mold beetle (*Batrisodes texanus*)

Amphibian

Houston toad (*Bufo houstonenis*)

Birds

bald eagle (*Haliaeetus leucocephalus*)
aplomado falcon (*Falco femoralis*)
piping plover (*Charadrius melodus*)
interior least tern (*Sterna antillarum athalassos*)
black-capped vireo (*Vireo atricapillus*)
golden-cheeked warbler (*Dendroica chrysoparia*)
red-cockaded woodpecker (*Picoides borealis*)

Plants

large-fruited sand verbena (*Abronia macrocarpa*)
Navasota ladies'-tresses (*Spiranthes parksii*)
Texas trailing phlox (*Phlox nivalis ssp. texensis*)
slender rush-pea (*Hoffmannseggia tenella*)
South Texas ragweed (*Ambrosia cheiranthifolia*)
Texas Ayenia (*Ayenia limitaris*)
Walker's manioc (*Manihot walkerae*)
ashy dogweed (*Thymophylla tephroleuca*)
Johnston's frankenia (*Frankenia johnstonii*)
black lace cactus (*Echinocereus reichenbachii var. albertii*)
star cactus (*Echinocactus asterius*)
Tobusch fishhook cactus (*Ancistrocactus tobuschii*)
Texas poppy mallow (*Callirhoe scabriuscula*)
Nellie cory cactus (*Coryphanthus minima*)
bunched cory cactus (*C. ramillosa*)
Sneed pincushion cactus (*C. sneedii var. sneedii*)
Terlingua Creek cat's eye (*Cryptantha crassipes*)
Chisos Mountain hedgehog cactus (*Echinocereus chisoensis*)
Lloyd's hedgehog cactus (*E. lloydii*)
Davis' green pitaya (*E. viridiflorus var. davisii*)
McKittrick pennyroyal (*Hedeoma apiculatum*)
Lloyd's mariposa cactus (*Neolloydia mariposensis*)
Little Aguja pondweed (*Potamogeton clystocarpus*)
Hinckley's oak (*Quercus hinckleyi*)

Permit No. 822908

Applicant: Dr. Michael E. Tewes, Kingsville, Texas

The applicant requests authorization for scientific research and recovery purposes to live-capture (using live box traps), handle, sedate, collect blood, fecal, tissue, and parasite samples from, attach a 100 g radio-collar to, ear tag and tattoo, hold (for approximately 6 hours) during recovery from sedation, release unharmed following complete recovery from sedation, and monitor the species listed below at Laguna Atascosa National Wildlife Refuge, Texas, and Cameron, Starr, Willacy, Hidalgo, Kennedy, Brooks, Jim Wells, Webb, Live Oak, McMullen, Dimmit, Zavala, Maverick, Atascosa, San Patricio, Nueces, Bee, Aransas, Jim Hogg, Zapata, Kleberg, and Duval Counties, Texas:

Ocelots (*Felis pardalis*), no more than 20 total for all locations listed,
Jaguarundi (*Felis yagouaroundi*), no more than 5 total for all locations listed.

Permit No. 822942

Applicant: Gregory J. Tickle, Dallas, Texas

The applicant requests authorization to conduct population surveys for the golden-cheeked warbler (*Dendroica chrysoparia*) and black-capped vireo (*Vireo atricapillus*) at various sites in Texas, Oklahoma, and Arizona.

Permit No. 822998

Applicant: John M. McGee, Tucson, Texas

The applicant requests authorization for scientific research and recovery purposes to census, survey, and monitor the activities of the Mt. Graham red squirrel (*Tamiasciurus hudsonicus*) and lesser long-nosed bat (*Leptoncyteris curasoae*).

Permit No. 823089

Applicant: Dr. Ralph J. Gutierrez, Arcata, California

The applicant requests authorization for scientific research and recovery purposes to conduct field surveys, locate, map the distribution of, capture, and immediately release unharmed at the capture sites adult and juvenile Mexican spotted owls (*Strix occidentalis lucida*) in New Mexico and Arizona.

Permit No. 823097

Applicant: Dr. Rebecca Reiss, Socorro, New Mexico

The applicant requests authorization to collect the Socorro isopod (*Thermosphaeroma thermophilum*) to establish a colony for propagation and molecular genetic analysis at Sedillo Springs, New Mexico.

DATES: Written comments on these permit applications must be received on or before January 27, 1997.

ADDRESSES: Written data or comments should be submitted to the Legal Instruments Examiner, Division of Endangered Species/Permits, Ecological Services, P.O. Box 1306, Albuquerque, New Mexico 87103. Please refer to the respective permit number for each application when submitting comments. All comments received, including names and addresses, will become part of the official administrative record and may be made available to the public.

FOR FURTHER INFORMATION CONTACT: U.S. Fish and Wildlife Service, Ecological Services, Division of Endangered Species/Permits, P.O. Box 1306, Albuquerque, New Mexico 87103. Please refer to the respective permit number for each application when requesting copies of documents. Documents and other information submitted with these applications are available for review, subject to the requirements of the Privacy Act and Freedom of Information Act, by any party who submits a written request for a copy of such documents within 30 days of the date of publication of this notice, to the address above.

Joseph P. Mazzoni,

Acting Regional Director, Region 2, Albuquerque, New Mexico.

[FR Doc. 96–32747 Filed 12–24–96; 8:45 am]

BILLING CODE 4510–55–P

DEPARTMENT OF COMMERCE

National Oceanic and Atmospheric Administration

DEPARTMENT OF THE INTERIOR

U.S. Fish and Wildlife Service

[I.D. 121796C]

Marine Mammals; Scientific Research Permit (P624)

AGENCY: National Marine Fisheries Service (NMFS), National Oceanic and Atmospheric Administration (NOAA), Commerce.

ACTION: Receipt of application.

SUMMARY: Notice is hereby given that Dr. Michael Moore, Research Specialist (Co-investigator: Dr. John Stegeman, Senior Scientist), MS 33 Biology Department, Woods Hole Oceanographic Institution, Woods Hole, MA 02543, has applied in due form for a permit to take marine mammals for purposes of scientific research.

DATES: Written comments must be received on or before January 27, 1997.

ADDRESSES: The application and related documents are available for review upon written request or by appointment in the following office(s):

Permits Division, Office of Protected Resources, NMFS, 1315 East-West

Highway, Room 13130, Silver Spring, MD 20910 (301/713–2289);

Regional Administrator, Northeast Region, NMFS, One Blackburn Drive, Gloucester, MA 01903–2298 (508/281–9250);

Regional Administrator, Southeast Region, NMFS, 9721 Executive Center Drive North, St. Petersburg, FL 33702–2532 (813/570–5301); and

U.S. Fish and Wildlife Service, Office of Management Authority, 4401 N. Fairfax Drive, Arlington, VA 22203.

Written data or views, or requests for a public hearing on this request, should be submitted to the Director, Office of Protected Resources, NMFS, 1315 East-West Highway, Room 13130, Silver Spring, MD 20910. Those individuals requesting a hearing should set forth the specific reasons why a hearing on this particular request would be appropriate.

Concurrent with the publication of this notice in the Federal Register, NMFS is forwarding copies of this application to the Marine Mammal Commission and its Committee of Scientific Advisors.

SUPPLEMENTARY INFORMATION: The subject permit is requested under the authority of the Marine Mammal Protection Act of 1972, as amended (16 U.S.C. 1361 *et seq.*), the Regulations Governing the Taking and Importing of Marine Mammals (50 CFR part 216), the Endangered Species Act of 1973, as amended (16 U.S.C. 1531 *et seq.*), and the regulations governing the taking, importing, and exporting of endangered fish and wildlife (50 CFR 222.23).

The applicant requests a permit to conduct the following activities annually: Collect biopsy samples from up to 40, conduct blubber thickness assay on up to 40, and inadvertently harass up to 60 Northern right whales (*Eubalaena glacialis*) off the coast of Georgia, Great South Channel, Cape Cod Bay and the Gulf of Maine; specifically import samples from Canada, Arctic, Kazakhstan (Russia), Falklands/South Georgia, Australia, New Zealand, South Africa, and opportunistically, import samples from all species of Cetacea and Pinnipedia worldwide; biopsy live stranded minke whales (*Balaenoptera acutorostrata*), finback whales (*B. physalus*), humpback whales (*Megaptera novaengliae*), long-finned pilot whales (*Globicephala melas*), and white-sided dolphins (*Lagenorhynchus acutus*) on Cape Cod.

Dated: December 17, 1996.

Ann D. Terbush,

Chief, Permits and Documentation Division, Office of Protected Resources, National Marine Fisheries Service.

Dated: December 17, 1996.

Margaret Tieger,

Chief, Branch of Permits, Office of Management Authority, U.S. Fish and Wildlife Service.

[FR Doc. 96–32776 Filed 12–24–96; 8:45 am]

BILLING CODE 3510–22–F

Bureau of Land Management

[WO–300–1310–00]

Green River Basin Advisory Committee, Colorado and Wyoming; Notice of Meeting

AGENCY: Bureau of Land Management, Interior.

ACTION: Notice of meeting of the Green River Basin Advisory Committee (GRBAC).

SUMMARY: This notice announces the dates, time, schedule and initial agenda for a meeting of the Green River Basin Advisory Committee.

DATES: January 15, 1997, from 8:00 a.m. until 4:00 p.m. and January 16, 1997, from 8:00 a.m. until 3:00 p.m.

ADDRESSES: Holiday Inn, 300 South Colorado Highway 13, Craig, Colorado.

FOR FURTHER INFORMATION CONTACT: Terri Trevino, GRBAC Coordinator, Bureau of Land Management, P.O. Box 1828, Cheyenne, WY 82003, telephone (307) 775–6020.

SUPPLEMENTARY INFORMATION: The topics for the meeting will include:

(1) Finalization of GRBAC Sub-Committee Reports
(2) Discussion of Cumulative Impacts Task Force report
(3) Construction and review of draft Final Report language
(4) Discussion of future GRBAC actions
(5) Public comment

This meeting is open to the public. Persons interested in making oral comments or submitting written statements for the GRBAC's consideration should notify the GRBAC Coordinator at the above address by January 13. The GRBAC will hear oral comments beginning at 4:00 p.m. on January 15, and may establish a time limit for oral statements.

Dated: December 19, 1996.

Mat Millenbach,

Acting Director, Bureau of Land Management.

[FR Doc. 96–32828 Filed 12–24–96; 8:45 am]

BILLING CODE 4310–84–M

National Park Service

Draft Environmental Impact Statement (DEIS) for Lake Crescent Management Plan, Olympic National Park, WA

AGENCY: National Park Service, Interior.

ACTION: Notice of extension of public review period.

SUMMARY: The comment period as specified in the official Notice of Availability (FR, Vol. 61, No. 203, p. 54437) was to end December 17, 1996, but was extended to February 3, 1997 (FR, Vol. 61, No. 223, p. 58702). This present Notice announces that the comment period has been extended until March 19, 1997.

DATES: Comments on the DEIS must be received no later than March 19, 1997.

ADDRESSES: Written comments should be submitted to the Superintendent, Olympic National Park, 600 E. Park Ave., Port Angeles, WA 98362.

FOR FURTHER INFORMATION CONTACT: Superintendent, Olympic National Park, at the above address or at telephone number (360) 452–4501, ext. 207.

Dated: December 19, 1996.

William C. Walters,

Deputy Field Director, Pacific West Field Area.

[FR Doc. 96–32826 Filed 12–24–96; 8:45 am]

BILLING CODE 4310–70–P

Missouri National Recreational River Advisory Group

AGENCY: National Park Service, Interior.

ACTION: Notice of meeting.

SUMMARY: This notice sets the schedule for the forthcoming meeting of the Missouri National Recreational River Advisory Group. Notice of this meeting is required under the Federal Advisory Committee Act (Public Law 92–463).

DATE, TIME, AND ADDRESS: Wednesday, January 29, 1997; 1:30 p.m.; Niobrara State Park Group Lodge, Niobrara, Nebraska. In the event of cancellation of the meeting scheduled above, a snow date will be in effect as scheduled as follows:

Snow Date: Wednesday, February 5, 1997; 1:30 p.m.

ADDRESSES: Niobrara State Park Group Lodge, Niobrara, Nebraska.

AGENDA: (1) Discussion of a group advisory statement concerning the draft general management plan; (2) Public comments to the advisory group; (3) Final discussions and approval of the advisory group statement to the Secretary of the Interior concerning the draft plan; (4) Proposed agenda, date,

and time, of the next Advisory Group meeting. The meeting is open to the public. Interested persons may make oral/written presentation to the Commission or file written statements. Requests for time for making presentations may be made to the Superintendent prior to the meeting or to the Chair at the beginning of the meeting. In order to accomplish the agenda for the meeting, the Chair may want to limit or schedule public presentations.

The meeting will be recorded for documentation and a summary in the form of minutes will be transcribed for dissemination. Minutes of the meeting will be made available to the public after approval by the Commission members. Copies of the minutes may be requested by contacting the Superintendent. An audio tape of the meeting will be available at the headquarters office of the Niobrara/Missouri National Scenic Riverways in O'Neill, Nebraska.

FOR FURTHER INFORMATION CONTACT: Superintendent Warren Hill, Niobrara/Missouri National Scenic Riverways, P.O. Box 591, O'Neill, Nebraska 68763–0591, or by phone at 402–336–3970.

SUPPLEMENTARY INFORMATION: The Advisory Group was established by the law that established the Missouri National Recreational River, Public Law 102–50. The purpose of the group, according to its charter, is to advise the Secretary of the Interior on matters pertaining to the development of a management plan, and management and operation of the recreational river. The Missouri National Recreational River is the 39-mile free flowing segment of the Missouri from Fort Randall Dam to the vicinity of Springfield in South Dakota.

Dated: December 17, 1996.

William W. Schenk,

Field Director, Midwest Field Area.

[FR Doc. 96–32750 Filed 12–24–96; 8:45 am]

BILLING CODE 4310–70–P

Bureau of Reclamation

Notice of Request for Approval of an Information Collection

AGENCY: Bureau of Reclamation, Interior.

ACTION: Notice and request for comments.

SUMMARY: In accordance with the Paperwork Reduction Act of 1995, this notice announces the intentions of the Bureau of Reclamation (Reclamation) to seek approval of an information collection for a voluntary customer survey. The surveys will be conducted in the Great Plains Region,which includes all of North Dakota, South Dakota, Nebraska, Kansas, Oklahoma, and large portions of Montana, Wyoming, Colorado, and Texas. The mission of the Bureau of Reclamation is to manage, develop, and protect water and related resources in an environmentally and economically sound manner in the interest of the American public. The collections will obtain information for determining the level of satisfaction with the service provided and to identify any areas where improvements in providing service can be made.

DATES: Comments on this notice must be received by February 24, 1997.

FOR FURTHER INFORMATION CONTACT: To submit comments on this information collection contact: Bureau of Reclamation, Information Collection Officer, D–7924, P.O. Box 25007, Denver, Colorado 80225–0007; telephone: (303) 236–0305 extension 459; Internet address: infocoll2do.usbr.gov.

SUPPLEMENTARY INFORMATION: Comments are invited on: (a) whether the proposed collection of information is necessary for the proper performance of the functions of Reclamation, including whether the information shall have practical utility; (b) the accuracy of Reclamation's estimated burden of the proposed collection of information; (c) ways to enhance the quality, utility, and clarity of the information to be collected; and (d) ways to minimize the burden of the collection of information on those who are to respond, including through the use of automated collection techniques or other forms of information technology. Consideration will be given to comments and suggestions submitted within 60 days of this publication.

Title: Great Plains Region Voluntary Customer Survey to Implement Executive Order 12862.

Description of respondents: Reclamation's customers include individuals from the related water and electrical service utilities, i.e., Federal, State, and local entities, Native Americans, universities, the press, environmental groups, the legal community, consultants, and the general public.

Frequency: Semi-annual questionnaires will be provided to a major sampling of customers.

Estimated completion time: An average of 30 minutes is required to fill out the form.

Annual responses: 7,000.

Annual burden hours: 3,500 hours.

Dated: December 18, 1996.

Robert M. Sims,

Manager, Property and Facilities.

[FR Doc. 96–32849 Filed 12–24–96; 8:45 am]

BILLING CODE 4310–94–M

Office of Surface Mining Reclamation and Enforcement

Notice of Proposed Information Collection

AGENCY: Office of Surface Mining Reclamation and Enforcement.

ACTION: Notice and request for comments.

SUMMARY: In compliance with the Paperwork Reduction Act of 1995, the Office of Surface Mining Reclamation and Enforcement (OSM) is announcing its intention to request approval for the collections of information for a technical training program course effectiveness evaluation.

DATES: Comments on the proposed information collection must be received by February 24, 1997, to be assured of consideration.

ADDRESSES: Comments may be mailed to John A. Trelease, Office of Surface Mining Reclamation and Enforcement, 1951 Constitution Ave., NW., Room 210–SIB, Washington, DC 20240.

FOR FURTHER INFORMATION CONTACT: To request a copy of the information collection request, explanatory information and related forms, contact John A. Trelease, at (202) 208–2783.

SUPPLEMENTARY INFORMATION: The Office of Management and Budget (OMB) regulations at 5 CFR 1320, which implement provisions of the Paperwork Reduction Act of 1995 (Pub. L. 104–13), require that interested members of the public and affected agencies have an opportunity to comment on information collection and recordkeeping activities (see 5 CFR 1320.8(d)). This notice identifies information collections that OSM will be submitting to OMB for approval.

OSM will request a 3-year term of approval for the information collection activity.

Comments are invited on: (1) the need for the collection of information for the performance of the functions of the agency; (2) the accuracy of the agency's burden estimates; (3) ways to enhance the quality, utility and clarity of the information collection; and (4) ways to minimize the information collection burden on respondents, such as use of automated means of collection of the information. A summary of the public comments will be included in OSM's

submissions of the information collection requests to OMB.

The following information is provided for the information collection: (1) title of the information collection; (2) OMB control number; (3) summary of the information collection activity; and (4) frequency of collection, description of the respondents, estimated total annual responses, and the total annual reporting and recordkeeping burden for the collection of information.

Title: Technical Training Program Course Effectiveness Evaluation.

OMB Control Number: None.

Summary: Executive Order 12862 requires agencies to survey customers to determine the kind and quality of services they want and their level of satisfaction with existing services. The information supplied by this evaluation will determine customer satisfaction with OSM's training program and identify needs of respondents.

Bureau Form Number: None.

Frequency of Collection: On Occasion.

Description of Respondents: State regulatory authority and Tribal employees and their supervisors.

Total Annual Responses: 650.

Total Annual Burden Hours: 110 hours.

Dated: December 27, 1996

Sarah E. Donnelly,

Acting Chief, Division of Regulatory Support.

[FR Doc. 96–32764 Filed 12–24–96; 8:45 am]

BILLING CODE 4310–05–M

INTERNATIONAL DEVELOPMENT COOPERATION AGENCY

Overseas Private Investment Corporation

Submission for OMB review; Comment Request

AGENCY: Overseas Private Investment Corporation, IDCA.

ACTION: Request for comments.

SUMMARY: Under the provisions of the Paperwork Reduction Act (44 U.S.C. Chapter 35), Agencies are required to publish a Notice in the Federal Register notifying the public that the Agency has prepared an information collection request for OMB review and approval and has requested public review and comment on the submission. OPIC published its first Federal Register Notice on this information collection request on October 17, 1996, in 61 FR 54214, at which time a 60-day comment period was announced. This comment period ended on December 16, 1996. No comments were received in response to this Notice.

This information collection submission has now been submitted to OMB for review. Comments are again being solicited on the need for the information, its practical utility, the accuracy of the Agency's burden estimate, and on ways to minimize the reporting burden, including automated collection techniques and uses of other forms of technology.

The proposed form under review is summarized below.

DATES: Comments must be received within 30 calendar days of this Notice.

ADDRESSES: Copies of the subject form and the request for review submitted to OMB may be obtained from the Agency Submitting Officer. Comments on the form should be submitted to the OMB Reviewer.

FOR FURTHER INFORMATION CONTACT:

OPIC Agency Submitting Officer: Lena Paulsen, Manager, Information Center, Overseas Private Investment Corporation, 1100 New York Avenue, N.W., Washington, D.C. 20527; 202/336–8565.

OMB Reviewer: Victoria Wassmer, Office of Information and Regulatory Affairs, Office of Management and Budget, New Executive Office Building, Docket Library, Room 10102, 725 17th Street, N.W., Washington, DC 20503, 202/395–5871.

Summary of Form Under Review

Type of Request: Revised form.

Title: Application for Political Risk Investment Insurance.

Form Number: OPIC–52.

Frequency of Use: Once per investor per project.

Type of Respondents: Business or other institutions (except farms); individuals.

Standard Industrial Classification Codes: All.

Description of Affected Public: U.S. companies or citizens investing overseas.

Reporting Hours: 6 hours per project.

Number of Response: 160 per year.

Federal Cost: $4,000 per year.

Authority for Information Collection: Sections 231, 234(a), 239(d), and 240A of the Foreign Assistance Act of 1961, as amended.

Abstract (Needs and Uses): The application is the principal document used by OPIC to determine the investor's and project's eligibility, assess the environmental impact and developmental effects of the project, measure the economic effects for the United States and the host country economy, and collect information for underwriting analysis.

Dated: December 19, 1996.

James R. Offutt,

Assistant General Counsel, Department of Legal Affairs.

[FR Doc. 96–32754 Filed 12–24–96; 8:45 am]

BILLING CODE 3210–01–M

INTERNATIONAL TRADE COMMISSION

[Investigation No. 731–TA–748 (Final)]

Engineered Process Gas Turbo-Compressor Systems From Japan

AGENCY: United States International Trade Commission.

ACTION: Scheduling of the final phase of an antidumping investigation.

SUMMARY: The Commission hereby gives notice of the scheduling of the final phase of antidumping Investigation No. 731–TA–748 (Final) under section 735(b) of the Tariff Act of 1930 (19 U.S.C. § 1673d(b)) (the Act) to determine whether an industry in the United States is materially injured or threatened with material injury, or the establishment of an industry in the United States is materially retarded, by reason of less-than-fair-value imports from Japan of engineered process gas turbo-compressor systems (EPGTS), whether assembled or unassembled, and whether complete or incomplete. The systems covered by this investigation are only those used in the petrochemical and fertilizer industries, in the production of ethylene, propylene, ammonia, urea, methanol, refinery and other petrochemical products. The subject imports are provided for in subheadings 8414.80.20, 8414.90.40, 8419.60.50, 8406.81.10, 8406.82.10, 8406.90.20 through 8406.90.45, 8483.40.50, 8501.53.40, 8501.53.60, 8501.53.80, and 9032.89.60 of the Harmonized Tariff Schedule of the United States. Excluded from this investigation are spare parts, including parts or components for the revamp or repair of an existing EPGTS, that are sold separately from an original contract for an EPGTS.

For further information concerning the conduct of this phase of the investigation, hearing procedures, and rules of general application, consult the Commission's Rules of Practice and Procedure, part 201, subparts A through E (19 CFR part 201), and part 207, subparts A and C (19 CFR part 207), as amended by 61 FR 37818, July 22, 1996.

EFFECTIVE DATE: December 9, 1996.

FOR FURTHER INFORMATION CONTACT: Diane J. Mazur (202–205–3184), Office of Investigations, U.S. International

Trade Commission, 500 E Street SW, Washington, DC 20436. Hearing-impaired persons can obtain information on this matter by contacting the Commission's TDD terminal on 202–205–1810. Persons with mobility impairments who will need special assistance in gaining access to the Commission should contact the Office of the Secretary at 202–205–2000. General information concerning the Commission may also be obtained by accessing its internet server (http://www.usitc.gov or ftp://ftp.usitc.gov).

SUPPLEMENTARY INFORMATION:

Background

The final phase of this investigation is being scheduled as a result of an affirmative preliminary determination by the Department of Commerce that imports of engineered process gas turbo-compressor systems from Japan are being sold in the United States at less than fair value within the meaning of section 733 of the Act (19 U.S.C. § 1673b). The investigation was requested in a petition filed on May 8, 1996, by Dresser-Rand Company, Corning, NY.

Participation in the Investigation and Public Service List

Persons, including industrial users of the subject merchandise and, if the merchandise is sold at the retail level, representative consumer organizations, wishing to participate in the final phase of this investigation as parties must file an entry of appearance with the Secretary to the Commission, as provided in section 201.11 of the Commission's rules, no later than 21 days prior to the hearing date specified in this notice. A party that filed a notice of appearance during the preliminary phase of the investigation need not file an additional notice of appearance during this final phase. The Secretary will maintain a public service list containing the names and addresses of all persons, or their representatives, who are parties to the investigation.

Limited Disclosure of Business Proprietary Information (BPI) Under an Administrative Protective Order (APO) and BPI Service List

Pursuant to section 207.7(a) of the Commission's rules, the Secretary will make BPI gathered in the final phase of this investigation available to authorized applicants under the APO issued in the investigation, provided that the application is made no later than 21 days prior to the hearing date specified in this notice. Authorized applicants must represent interested parties, as defined by 19 U.S.C. § 1677(9), who are parties to the investigation. A party granted access to BPI in the preliminary phase of the investigation need not reapply for such access. A separate service list will be maintained by the Secretary for those parties authorized to receive BPI under the APO.

Staff Report

The prehearing staff report in the final phase of this investigation will be placed in the nonpublic record on April 10, 1997, and a public version will be issued thereafter, pursuant to section 207.22 of the Commission's rules.

Hearing

The Commission will hold a hearing in connection with the final phase of this investigation beginning at 9:30 a.m. on April 24, 1997, at the U.S. International Trade Commission Building. Requests to appear at the hearing should be filed in writing with the Secretary to the Commission on or before April 16, 1997. A nonparty who has testimony that may aid the Commission's deliberations may request permission to present a short statement at the hearing. All parties and nonparties desiring to appear at the hearing and make oral presentations should attend a prehearing conference to be held at 9:30 a.m. on April 18, 1997, at the U.S. International Trade Commission Building. Oral testimony and written materials to be submitted at the public hearing are governed by sections 201.6(b)(2), 201.13(f), and 207.24 of the Commission's rules. Parties must submit any request to present a portion of their hearing testimony *in camera* no later than 7 days prior to the date of the hearing.

Written Submissions

Each party who is an interested party shall submit a prehearing brief to the Commission. Prehearing briefs must conform with the provisions of section 207.23 of the Commission's rules; the deadline for filing is April 17, 1997. Parties may also file written testimony in connection with their presentation at the hearing, as provided in section 207.24 of the Commission's rules, and posthearing briefs, which must conform with the provisions of section 207.25 of the Commission's rules. The deadline for filing posthearing briefs is May 1, 1997; witness testimony must be filed no later than three days before the hearing. In addition, any person who has not entered an appearance as a party to the investigation may submit a written statement of information pertinent to the subject of the investigation on or before May 1, 1997. On May 23, 1997, the Commission will make available to parties all information on which they have not had an opportunity to comment. Parties may submit final comments on this information on or before May 28, 1997, but such final comments must not contain new factual information and must otherwise comply with section 207.30 of the Commission's rules. All written submissions must conform with the provisions of section 201.8 of the Commission's rules; any submissions that contain BPI must also conform with the requirements of sections 201.6, 207.3, and 207.7 of the Commission's rules.

In accordance with sections 201.16(c) and 207.3 of the Commission's rules, each document filed by a party to the investigation must be served on all other parties to the investigation (as identified by either the public or BPI service list), and a certificate of service must be timely filed. The Secretary will not accept a document for filing without a certificate of service.

Authority: This investigation is being conducted under authority of title VII of the Tariff Act of 1930; this notice is published pursuant to section 207.21 of the Commission's rules.

Issued: December 16, 1996.

By order of the Commission.

Donna R. Koehnke,

Secretary.

[FR Doc. 96–32777 Filed 12–24–96; 8:45 am]

BILLING CODE 7020–02–P

[Investigation No. 332–288]

Ethyl Alcohol for Fuel Use; Determination of the Base Quantity of Imports

AGENCY: United States International Trade Commission.

ACTION: Notice of Determination.

EFFECTIVE DATE: December 17, 1996.

SUMMARY: Section 7 of the Steel Trade Liberalization Program Implementation Act, as amended (19 U.S.C. 2703 note), which concerns local feedstock requirements for fuel ethyl alcohol imported by the United States from CBI-beneficiary countries, requires the Commission to determine annually the U.S. domestic market for fuel ethyl alcohol during the 12-month period ending on the preceding September 30. The domestic market estimate made by the Commission is to be used to establish the ''base quantity'' of imports that can be imported with a zero percent local feedstock requirement. The base quantity to be used by the U.S. Customs Service in the administration of the law

is the greater of 60 million gallons or 7 percent of U.S. consumption as determined by the Commission. Beyond the base quantity of imports, progressively higher local feedstock requirements are placed on imports of fuel ethyl alcohol and mixtures from the CBI- beneficiary countries.

For the 12-month period ending September 30, 1996, the Commission has determined the level of U.S. consumption of fuel ethyl alcohol to be 1.1 billion gallons. Seven percent of this amount is 79.7 million gallons (these figures have been rounded). Therefore, the base quantity for 1997 should be 79.7 million gallons.

FOR FURTHER INFORMATION CONTACT: Ms. Jean Harman (202) 205–3313 in the Commission's Office of Industries. For information on legal aspects of the investigation contact Mr. William Gearhart of the Commission's Office of the General Counsel at (202) 205–3091. Hearing-impaired individuals are advised that information on this matter can be obtained by contacting our TDD terminal on (202) 205–1810.

Background

For purposes of making determinations of the U.S. market for fuel ethyl alcohol as required by section 7 of the Act, the Commission instituted Investigation No. 332–288, Ethyl Alcohol for Fuel Use: Determination of the Base Quantity of Imports, in March 1990. The Commission uses official statistics of the U.S. Department of Energy to make these determinations as well as the PIERS database of the *Journal of Commerce,* which is based on U.S. export declarations.

Section 225 of the Customs and Trade Act of 1990 (Public Law 101–382, August 20, 1990) amended the original language set forth in the Steel Trade Liberalization Program Implementation Act of 1989. The amendment requires the Commission to make a determination of the U.S. domestic market for fuel ethyl alcohol for each year after 1989.

Issued: December 17, 1996.
By order of the Commission.

Donna R. Koehnke,

Secretary.

[FR Doc. 96–32779 Filed 12–24–96; 8:45 am]

BILLING CODE 7020–02–P

[Investigation No. 731–TA–740 (Final)]

Sodium Azide From Japan

AGENCY: United States International Trade Commission.

ACTION: Revised schedule for the subject investigation.

EFFECTIVE DATE: December 20, 1996.

FOR FURTHER INFORMATION CONTACT: Fred Ruggles (202–205–3187), Office of Investigations, U.S. International Trade Commission, 500 E Street SW, Washington, DC 20436. Hearing-impaired persons can obtain information on this matter by contacting the Commission's TDD terminal on 202–205–1810. Persons with mobility impairments who will need special assistance in gaining access to the Commission should contact the Office of the Secretary at 202–205–2000. General information concerning the Commission may also be obtained by accessing its internet server (http://www.usitc.gov or ftp://ftp.usitc.gov).

SUPPLEMENTARY INFORMATION: On August 16, 1996, the Commission established a schedule for the conduct of the final phase of the subject investigation (61 FR 50330, September 25, 1996). Counsel for the petitioner has requested that the Commission postpone the date for the submission of prehearing briefs until after December 30, 1996, the date on which Commerce's final determination is due. Accordingly, the Commission has postponed the date for submission of prehearing briefs to December 31, 1996; all other dates remain the same.

For further information concerning this investigation see the Commission's notice cited above and the Commission's Rules of Practice and Procedure, part 201, subparts A through E (19 CFR part 201), and part 207, subparts A and C (19 CFR part 207), as amended in 61 FR 37818, July 22, 1996.

Authority: This investigation is being conducted under authority of title VII of the Tariff Act of 1930; this notice is published pursuant to sections 207.21 and 207.23 of the Commission's rules.

By order of the Commission.
Issued: December 20, 1996

Donna R. Koehnke,

Secretary.

[FR Doc. 96–32829 Filed 12–24–96; 8:45 am]

BILLING CODE 7020–02–P

UNITED STATES INTERNATIONAL TRADE COMMISSION

[USITC SE–96–24]

Sunshine Act Meeting

AGENCY HOLDING THE MEETING: United States International Trade Commission.

TIME AND DATE: January 9, 1997 at 9:30 a.m.

PLACE: Room 101, 500 E Street S.W., Washington, DC 20436.

STATUS: Open to the public.

MATTERS TO BE CONSIDERED:

1. Agenda for future meeting.
2. Minutes.
3. Ratification List.
4. Inv. Nos. 731–TA–757–759 (Preliminary) (Collated Roofing Nails from China, Korea, and Taiwan)—briefing and vote.
5. Outstanding action jackets: none.

In accordance with Commission policy, subject matter listed above, not disposed of at the scheduled meeting, may be carried over to the agenda of the following meeting.

By order of the Commission:.
Issued: December 23, 1996.

Donna R. Koehnke,

Secretary.

[FR Doc. 96–33011 Filed 12–23–96; 2:35 pm]

BILLING CODE 7020–02–M

DEPARTMENT OF JUSTICE

Notice of Lodging of Consent Decree Pursuant to the Clean Water Act

In accordance with Departmental policy, 28 C.F.R. § 50.7, notice is hereby given that a proposed Stipulated Final Order for Injunctive Relief (''Consent Decree'') in *United States* v. *City of San Diego, et al.,* Civil Action No. 88–1101–B, was lodged on December 13, 1996, with the United States District Court for the Southern District of California. The United States brought a complaint under the Clean Water Act (the ''Act''), as amended, 33 U.S.C. §§ 1251 *et seq.,* against the City of San Diego (the ''City'') and against the statutory defendant the State of California for violations of the Act in connection with the City's wastewater treatment system.

The proposed consent decree requires the City to implement a number of long-term and short-term remedial measures designed to ensure compliance with the Act on a permanent, consistent basis. These measures include, *inter alia,* programs to replace concrete sewer mains in the City's sewer collection system and to conduct a comprehensive audit of all pump stations and force mains to augment existing records to provide a basis for future planning efforts.

The Department of Justice will receive, for a period of thirty (30) days from the date of this publication, comments relating to the proposed consent decree. Comments should be addressed to the Assistant Attorney General for the Environment and Natural Resources Division, Department of Justice, Washington, D.C. 20530, and should refer to *United States* v. *City of*

San Diego, et al., DOJ Ref. #90–5–1–1–2987.

The proposed consent decree may be examined at the office of the United States Attorney, Southern District of California, 880 Front Street, San Diego, California 92101; at the Region IX Office of the Environmental Protection Agency, 75 Hawthorne Street, San Francisco, California 94105; and at the Consent Decree Library, 1120 G Street, N.W., 4th Floor, Washington, D.C. 20005, (202) 624–0892. A copy of the proposed consent decree may be obtained in person or by mail from the Consent Decree Library, 1120 G Street, N.W., 4th Floor, Washington, D.C. 20005. In requesting a copy please refer to the referenced case and enclose a check in the amount of $4.75 (25 cents per page reproduction costs), payable to the Consent Decree Library.

Joel M. Gross,

Chief, Environmental Enforcement Section, Environment and Natural Resources Division.

[FR Doc. 96–32824 Filed 12–24–96; 8:45 am]

BILLING CODE 4410–15–M

Immigration and Naturalization Service

Agency Information Collection Activities: Proposed Collection; Comment Request

ACTION: Request OMB emergency approval; affidavit of support under section 213A of the Act.

The Department of Justice, Immigration and Naturalization Service has submitted the following information collection request (ICR) utilizing emergency review procedures, to the Office of Management and Budget (OMB) for review and clearance in accordance with the Paperwork Reduction Act of 1995. OMB approval has been requested by December 29, 1996. If granted, the emergency approval is only valid for 180 days. Comments should be directed to OMB, Office of Information and Regulatory Affairs, Attention: Ms. Deborah Bond, 202–395–7316, Department of Justice Desk Officer, Washington, DC 20503.

During the first 60 days of this same period a regular review of this information collection is also being undertaken. Comments are encouraged and will be accepted until February 24, 1997. Request written comments and suggestions from the public and affected agencies concerning the proposed collection of information. Your comments should address one or more of the following four points.

(1) Evaluate whether the proposed collection of information is necessary for the proper performance of the functions of the agency, including whether the information will have practical utility;

(2) Evaluate the accuracy of the agencies estimate of the burden of the proposed collection of information, including the validity of the methodology and assumptions used;

(3) Enhance the quality, utility, and clarity of the information to be collected; and

(4) Minimize the burden of the collection of information on those who are to respond, including through the use of appropriate automated, electronic, mechanical, or other technological collection techniques or other forms of information technology, e.g., permitting electronic submission of responses.

Overview of This Information Collection

(1) *Type of Information Collection:* New Information Collection.

(2) *Title of the Form/Collection:* Affidavit of Support Under Section 213A of the Act.

(3) *Agency form number, if any, and the applicable component of the Department of Justice sponsoring the collection:* Form I–864. Adjudications Division, Immigration and Naturalization Service.

(4) *Affected public who will be asked or required to respond, as well as a brief abstract:* Primary: Individuals or Households. The form is mandated by law for a petitioning relative to submit an affidavit on their relative's behalf. The executed form creates a contract between the sponsor and any entity that provides means-tested public benefits.

(5) *An estimate of the total number of respondents and the amount of time estimated for an average respondent to respond:* 610,000 respondents at 1.15 hours per response.

(6) *An estimate of the total public burden (in hours) associated with the collection:* 701,500 annual burden hours.

If you have additional comments, suggestions, or need a copy of the proposed information collection instrument with instructions, or additional information, please contact Mr. Richard A. Sloan, 202–616–7600, Director, Policy Directives and Instructions Branch, Immigration and Naturalization Service, U.S. Department of Justice, Room 5307, 425 I Street, NW., Washington, DC 20536.

If additional information is required contact: Mr. Robert B. Briggs, Clearance Officer, United States Department of Justice, Information Management and Security Staff, Justice Management Division, Suite 850, Washington Center, 1001 G Street, NW, Washington, DC 20530.

Dated: December 20, 1996.

Robert B. Briggs,

Department Clearance Officer, United States Department of Justice.

[FR Doc. 96–32830 Filed 12–24–96; 8:45 am]

BILLING CODE 4410–18–M

Agency Information Collection Activities: Proposed Collection; Comment Request

ACTION: Request OMB emergency approval; medical certification for disability exceptions.

The Department of Justice, Immigration and Naturalization has submitted the following information collection request (ICR) utilizing emergency review procedures, to the Office of Management and Budget (OMB) for review and clearance in accordance with the Paperwork Reduction Act of 1995. OMB approval has been requested by December 29, 1996. If granted, the emergency approval is only valid for 180 days. Comments should be directed to OMB, Office of Information and Regulatory Affairs, Attention: Ms. Deborah Bond, 202–395–7316, Department of Justice Desk Officer, Washington, DC 20503.

During the first 60 days of this same period a regular review of this information collection is also being undertaken. Comments are encouraged and will be accepted until February 24, 1997. Request written comments and suggestions from the public and affected agencies concerning the proposed collection of information. Your comments should address one or more of the following four points.

(1) Evaluate whether the proposed collection of information is necessary for the proper performance of the functions of the agency, including whether the information will have practical utility;

(2) Evaluate the accuracy of the agencies estimate of the burden of the proposed collection of information, including the validity of the methodology and assumptions used;

(3) Enhance the quality, utility, and clarity of the information to be collected; and

(4) Minimize the burden of the collection of information on those who are to respond, including through the use of appropriate automated, electronic, mechanical, or other technological collection techniques or other forms of information technology,

e.g., permitting electronic submission of responses.

Overview This Information Collection

(1) *Type of Information Collection:* New Information Collection.

(2) *Title of the Form/Collection:* Medical Certification for Disability Exceptions.

(3) *Agency form number, if any, and the applicable component of the Department of Justice sponsoring the collection:* Form N–648. Adjudications Division, Immigration and Naturalization Service.

(4) *Affected public who will be asked or required to respond, as well as a brief abstract:* Primary: Individual or Households. These medical certifications, executed by licensed health care providers, will be used to support an applicant's claim to an exception of the literacy and history/government knowledge requirements found in section 312 of the Immigration and Nationality Act.

(5) *An estimate of the total number of respondents and the amount of time estimated for an average respondent to respond:* 300,000 respondents at 3 hours per response.

(6) *An estimate of the total public burden (in hours) associated with the collection:* 900,000 annual burden hours.

If you have additional comments, suggestions, or need a copy of the proposed information collection instrument with instructions, or additional information, please contact Mr. Richard A. Sloan, 202–616–7600, Director, Policy Directives and Instructions Branch, Immigration and Naturalization Service, U.S. Department of Justice, Room 5307, 425 I Street, NW., Washington, DC 20536.

If additional information is required contact: Mr. Robert B. Briggs, Clearance Officer, United States Department of Justice, Information Management and Security Staff, Justice Management Division, Suite 850, Washington Center, 1001 G Street, NW., Washington, DC 20530.

Dated: December 26, 1996.

Robert B. Briggs,

Deaprtment Clearance Officer, United States Department of Justice.

[FR Doc. 96–32831 Filed 12–24–96; 8:45 am]

BILLING CODE 4410–18–M

Agency Information Collection Activities: Revision of Existing Collection; Comment Request

ACTION: Notice of information collection under review; application—alternative inspection services.

The Department of Justice, Immigration and Naturalization Service submitted the following information collection request utilizing emergency review procedures, to the Office of Management and Budget (OMB) for review and clearance in accordance with the Paperwork Reduction Act 1995. This proposed information collection was previously published in the Federal Register on October 15, 1996, at 61 FR 53766, allowing for an emergency review with a 60-day public comment period. No comments were received by the Immigration and Naturalization Service. The Office of Management and Budget approved this information collection under emergency review.

The purpose of this notice is to allow an additional 30 days for public comments. Comments are encouraged and will be accepted until January 23, 1997. This process is conducted in accordance with 5 CFR Part 1320.10.

Written comments and/or suggestions regarding the item(s) contained in this notice, especially regarding the estimated public burden and associated response time, should be directed to the Office of Management and Budget, Office of Regulatory Affairs, Attention: Department of Justice Desk Officer, Washington, DC 20530. Additionally, comments may be submitted to OMB via facsimile to 202–395–7285. Comments may also be submitted to the Department of Justice (DOJ), Justice Management Division, Information Management and Security Staff, Attention: Department Clearance Officer, Suite 850, 1001 G Street, NW, Washington, DC, 20530. Additionally, comments may be submitted to DOJ via facsimile to 202–514–1590.

Written comments and suggestions from the public and affected agencies should address one or more of the following points:

(1) Evaluate whether the proposed collection of information is necessary for the proper performance of the functions of the agency/component, including whether the information will have practical utility;

(2) Evaluate the accuracy of the agencies/components estimate of the burden of the proposed collection of information, including the validity of the methodology and assumptions used;

(3) Enhance the quality, utility, and clarity of the information to be collected; and

(4) Minimize the burden of the collection of information on those who are to respond, including through the use of appropriate automated, electronic, mechanical, or other technological collection techniques or other forms of information technology, e.g., permitting electronic submission of responses.

The proposed collection is listed below:

(1) *Type of Information Collection:* Revision of a currently approved collection.

(2) *Title of the Form/Collection.* Application—Alternative Inspection Services.

(3) *Agency form number, if any, and the applicable component of the Department of Justice sponsoring the collection:* Form I–823. Inspections Division, Immigration and Naturalization Service.

(4) *Affected public who will be asked or required to respond, as well as a brief abstract:* Primary: Individuals or Households. The collected data will be used to determine eligibility for automated inspections programs and to secure those data elements necessary to confirm enrollment at the time of application for admission to the United States.

(5) *An estimate of the total number of respondents and the amount of time estimated for an average respondent to respond:* 500,000 respondents at 70 minutes (1.166) per response.

(6) *An estimate of the total public burden (in hours) associated with the collection:* 583,000 annual burden hours.

Public comment on this proposed information collection is strongly encouraged.

Dated: December 19, 1998.

Robert B. Briggs,

Department Clearance Officer, United States Department of Justice.

[FR Doc. 96–32705 Filed 12–24–96; 8:45 am]

BILLING CODE 4410–18–M

DEPARTMENT OF LABOR

Employment and Training Administration

Amended Certification Regarding Eligibility to Apply for Worker Adjustment Assistance

TA–W–32,754, Bull HN Information Systems Incorporated, Billerica, Massachusetts; TA–W–32,754A, Bull HN Information Systems Incorporated, Brighton, Massachusetts; TA–W–32,754B, Bull HN Information Systems Incorporated, Phoenix, Arizona; and various field offices in the following States: TA–W–32,754C—AL, TA–W–32,754D—CA, TA–W–32,754E—CO, TA–W–32,754F—FL, TA–W–32,754G—GA, TA–W–32,754H—IA, TA–W–32,754I—IL, TA–W–32,754J—MA, TA–W–32,754K—ME, TA–W–32,754L—MI, TA–W–32,754M—MN, TA–W–32,754N—MO, TA–W–32,754O—NE, TA–

W–32,754P—NH, TA–W–32,754Q—NY, TA–W–32,754R—OH, TA–W–32,754S—OK, TA–W–32,754T—OR, TA–W–32,754U—PA, TA–W–32,754V—TX, TA–W–32,754W—VA.

In accordance with Section 223 of the Trade Act of 1974 (19 U.S.C. 2273) the Department of Labor issued a Certification of Eligibility to Apply for Worker Adjustment Assistance on December 5, 1996, applicable to all workers of Bull HN Information Systems Incorporated located in Billerica and Brighton, Massachusetts, Phoenix, Arizona, and various field offices at numerous United States locations. The notice will soon be published in the Federal Register.

At the request of the State agency, the Department reviewed the certification for workers at the subject firm. The Department is amending that part of the certification for TA–W–32,754 related to the September 10, 1995 impact date for workers at Bull HN Information Systems, Incorporated, in order to avoid a coverage overlap with certifications TA–W–29,522 and TA–W–32,860 for the same groups of workers at Bull HN Information Systems.

Accordingly, the Department is deleting the September 10, 1995 impact date set in TA–W–32,754 for all workers at all locations of Bull HN Information Systems and inserting a new impact date of August 19, 1996.

The amended notice applicable to TA–W–32,754 is hereby issued as follows:

''All workers of Bull HN Information Systems, Incorporated, Billerica, Massachusetts; Bull HN Information Systems Incorporated, Brighton, Massachusetts; Bull HN Information Systems Incorporated, Phoenix, Arizona; and, various field offices in Alabama, California, Colorado, Florida, Georgia, Iowa, Illinois, Massachusetts, Maine, Michigan, Minnesota, Missouri, Nebraska, New Hampshire, New York, Ohio, Oklahoma, Oregon, Pennsylvania, Texas, and Virginia engaged in employment related to the production of computer circuit boards and other computer related materials who became totally or partially separated from employment on or after August 19, 1996 are eligible to apply for adjustment assistance under Section 223 of the Trade Act of 1974.''

SIgned in Washington, DC, this 10th day of December, 1996.

Russell T. Kile,

Program Manager, Policy and Reemployment Services, Office of Trade Adjustment Assistance.

[FR Doc. 96–32792 Filed 12–24–96; 8:45 am]

BILLING CODE 4510–30–M

[TA–W–32,593, TA–W–32,593A]

Connor Forest Industries, Inc., Wakefield and Baraga, Michigan; Amended Certification Regarding Eligibility to Apply for Worker Adjustment Assistance

In accordance with Section 223 of the Trade Act of 1974 (19 USC 2273) the Department of Labor issued a Notice of Certification Regarding Eligibility to Apply for Worker Adjustment Assistance on September 12, 1996, applicable to workers of Connor Forest Industries, Inc. located in Wakefield, Michigan. The notice was published in the Federal Register on October 1, 1996 (61 FR 51304).

At the request of the State agency, the Department reviewed the certification for workers of the subject firm. New findings show that workers separations have occurred at the subject firm's Baraga, Michigan location. The workers produce lumber.

The intent of the Department's certification is to include all workers of Connor Forest Industries, Inc., who were affected by increased imports of lumber. Accordingly, the Department is amending the worker certification to include the workers of Connor Forest Industries, Inc. located in Baraga, Michigan.

The amended notice applicable to TA–W–32,593 is hereby issued as follows:

All workers of Connor Forest Industries, Inc., Wakefield, Michigan (TA–W–32,593) and Baraga, Michigan (TA–W–32,593A), who became totally or partially separated from employment on or after July 12, 1995, are eligible to apply for adjustment assistance under Section 223 of the Trade Act of 1974.

Signed at Washington, D.C. this 17th day of December 1996.

Russell T. Kile,

Program Manager, Policy and Reemployemnt Services, Office of Trade Adjustment Assistance.

[FR Doc. 96–32677 Filed 12–24–96; 8:45 am]

BILLING CODE 4510–30–M

Amended Certification Regarding Eligibility to Apply for Worker Adjustment Assistance

E.I. DuPont DeNemours & Company, TA–W–32,453, Parlin, New Jersey, and TA–W–32,453A; Clifton, New Jersey.

In accordance with Section 223 of the Trade Act of 1974 (19 USC 2273) the Department of Labor issued a Notice of Certification Regarding Eligibility to Apply for Worker Adjustment Assistance on June 17, 1996, applicable to all workers of E.I. DuPont DeNemours & Company, located in Parlin, New Jersey.

The notice was published in the Federal Register on August 6, 1996 (61 FR 40852).

Based on new information received from the company, the Department reviewed the certification for workers of the subject firm. New information provided by the company shows that the subject firm's Clifton, New Jersey facility is scheduled to shutdown by the end of 1996; at which time, all workers will be permanently laid off from the subject firm's Clifton, New Jersey location. These workers are engaged in employment related to the distribution and marketing of graphic arts film manufactured by its affiliate located in Parlin, New Jersey.

The intent of the Department's certification is to include all workers of E.I. DuPont DeNemours & Company who were adversely affected by imports.

Accordingly, the Department is amending the certification to cover the workers separated from E.I. DuPont DeNemours & Company, located in Clifton, New Jersey.

The amended notice applicable to TA–W–32,453 is hereby issued as follows:

''All workers of E.I. DuPont DeNemours & Company, located in Parlin, New Jersey (TA–W–32,453) and E.I. DuPont DeNemours & Company, located in Clifton, New Jersey (TA–W–32,453A) who became totally or partially separated from employment on or after June 3, 1995 are eligible to apply for adjustment assistance under Section 223 of the Trade Act of 1974.''

Signed at Washington, DC, this 10th day of December 1996.

Russell T. Kile,

Program Manager, Policy and Reemployment Services, Office of Trade Adjustment Assistance.

[FR Doc. 96–32783 Filed 12–24–96; 8:45 am]

BILLING CODE 4510–30–M

[TA–W–32, 813]

E.I. DuPont DeNemours & Company, Clifton, New Jersey; Notice of Termination of Investigation

Pursuant to Section 221 of the Trade Act of 1974, an investigation was initiated on October 15, 1996 in response to a worker petition which was filed September 26, 1996 on behalf of workers at E.I. DuPont DeNemours & Company, located in Clifton, New Jersey (TA–W–32,813).

The petitioning group of workers are covered under an existing Trade Adjustment Assistance certification (TA–W–32, 453). Consequently, further investigation in this case would service

no purpose, and the investigation has been terminated.

Signed at Washington, DC, this 10th day of December 1996.

Russell T. Kile,

Acting Program Manager, Policy and Reemployment Services Office of Trade Adjustment Assistance.

[FR Doc. 96–32784 Filed 12–24–96; 8:45 am]

BILLING CODE 4510–30–M

[TA–W–32, 718, TA–W–32, 718A, and TA–W–32, 718B]

The Olga Company Division of Warnaco, Inc., Fillmore, California; The Olga Company Division of Warnaco, Inc., Santa Paula, California; The Olga Company Division of Warnaco, Inc., City of Commerce, California; Certification Regarding Eligibility To Apply for Worker Adjustment Assistance

In accordance with Section 223 of the Trade Act of 1974 (19 USC 2273) as amended by the Omnibus Trade and Competitiveness Act of 1988 (P.L. 100–418), the Department of Labor herein presents the results of an investigation regarding certification of eligibility to apply for worker adjustment assistance.

In order the make an affirmative determination and issue a certification of eligibility to apply for adjustment assistance each of the group eligibility requirements of Section 222 of the Act must be met. It is determined in this case that all of the requirements have been met.

The investigation was initiated in response to a petition received on September 9, 1996, and filed on behalf of workers at The Olga Company, Division of Warnaco, Inc., Fillmore, Santa Paula, and City of Commerce, California. The workers produce women's intimate apparel.

Workers at the subject plants were certified eligible for NAFTA Transitional Adjustment benefits on August 14, 1996 (NAFTA–01155A and 01155B).

Warnaco, Inc., is transferring sewing and finishing work at the subject facilities to locations abroad. Apparel formerly sewn and finished at the subject plants is being imported from the foreign plants into the United States.

Conclusion

After careful review of the facts obtained in the investigation, I conclude that increases of imports of articles like or directly competitive with women's intimate apparel produced at The Olga Company, Division of Warnaco, Inc., Fillmore, Santa Paula, and City of Commerce, California, contributed importantly to the decline in sales or production and to the total or partial separation of workers of that firm. In accordance with the provisions of the Act, I make the following certification:

All workers of The Olga Company, Division of Warnaco, Inc., Fillmore, Santa Paula, and City of Commerce, California, who became totally or partially separated from employment on or after July 16, 1995, through two years from the date of certification, are eligible to apply for adjustment assistance under Section 223 of the Trade Act of 1974.

Signed in Washington, DC, this 30th day of October, 1996.

Russell T. Kile,

Program Manager, Policy and Reemployment Services, Office of Trade Adjustment Assistance.

[FR Doc. 96–32786 Filed 12–24–96; 8:45 am]

BILLING CODE 4510–30–M

[TA–W–32,968]

Velco Electronics, Inc., Fishers, New York; Notice of Termination of Investigation

Pursuant to Section 221 of the Trade Act of 1974, an investigation was initiated on November 25, 1996 in response to a worker petition which was filed on October 30, 1996 on behalf of workers at Velco Electronics, Inc., Fishers, New York.

The petitioner has requested that the petition be withdrawn. Consequently, further investigation in this case would serve no purpose, and the investigation has been terminated.

Signed in Washington, DC, this 6th day of December, 1996.

Russell T. Kile,

Program Manager, Policy and Reemployment Services, Office of Trade Adjustment Assistance.

[FR Doc. 96–32787 Filed 12–24–96; 8:45 am]

BILLING CODE 4510–30–M

[TA–W–32,808]

Warnaco, Incorporated, Olga Division, City of Commerce, California; Notice of Termination of Certification

This notice terminates the Certification Regarding Eligibility to Apply For Worker Adjustment Assistance issued by the Department on December 6, 1996, for all workers of Warnaco, Incorporated, Olga Division, City of Commerce, California. The notice will soon be published in the Federal Register.

At the request of the State agency, the Department reviewed the certification for workers of the subject firm. Findings show that the worker group is covered under an existing TAA certification (TA–W–32,718B).

Since the workers are already covered by a TAA certification, the continuation of the certification would serve no purpose and the certification has been terminated.

Signed at Washington, D.C., this 10th day of December 1996.

Russell T. Kile,

Program Manager, Policy and Reemployment Services, Office of Trade Adjustment Assistance.

[FR Doc. 96–32785 Filed 12–24–96; 8:45 am]

BILLING CODE 4510–30–M

[NAFTA–01049]

The Goodyear Tire & Rubber Company, Air Springs Manufacturing Division, Green, Ohio; Amended Certification Regarding Eligibility to Apply for NAFTA Transitional Adjustment Assistance

In accordance with Section 250(a), Subchapter D, Chapter 2, Title II, of the Trade Act of 1974, as amended (19 USC 2273), the Department of Labor issued a Notice of Revised Determination Regarding Eligibility to Apply for NAFTA-Transitional Adjustment Assistance on August 15, 1996, applicable to all workers of the Goodyear Tire & Rubber Company producing air sleeves in Green, Ohio. The notice was published in the Federal Register on September 6, 1996 (61 FR 47190).

At the request of the State agency, the Department reviewed the certification for workers of the subject firm. Review of the worker certification revealed that the workers produced air sleeves. For clarification, air sleeve is also know as shock sleeve. New information provided by the Goodyear Tire & Rubber Company shows that the company will move its air spring production from Green, Ohio, to its facility in Mexico. The transition will begin in 1997, and worker separations will begin in the first quarter of 1997. Accordingly, the Department is amending the certification to include all workers of the Goodyear Tire & Rubber Company, Green, Ohio engaged in employment related to the production of air springs. This amendment is also intended to clarify that the product air sleeve is also know as shock sleeve.

The intent of the Department's certification is to include all workers of the subject firm adversely affected by the shift in production to Mexico.

The amended notice applicable to NAFTA–01049 is hereby issued as follows:

All workers of the Goodyear Tire & Rubber Company, Green, Ohio engaged in employment related to the production of air sleeves also know as shock sleeves, and air springs, who became totally or partially separated from employment on or after May 25, 1995 are eligible to apply for NAFTA–TAA assistance under Section 250 of the Trade Act of 1974.

Signed at Washington, DC, this 11th day of December 1996.

Russell T. Kile,

Program Manager, Policy and Reemployment Services, Office of Trade Adjustment Assistance.

[FR Doc. 96–32788 Filed 12–24–96; 8:45 am]

BILLING CODE 4510–30–M

Employment Standards Administration

Proposed Collection; Comment Request

ACTION: Notice.

SUMMARY: The Department of Labor, as part of its continuing effort to reduce paperwork and respondent burden, conducts a preclearance consultation program to provide the general public and Federal agencies with an opportunity to comment on proposed and/or continuing collections of information in accordance with the Paperwork Reduction Act of 1995 (PRA95) [44 U.S.C. 3506(c)(2)(A)]. This program helps to ensure that requested data can be provided in the desired format, reporting burden (time and financial resources) is minimized, collection instruments are clearly understood, and the impact of collection requirements on respondents can be properly assessed. Currently, the Employment Standards Administration is soliciting comments concerning two proposed extension collections: (1) Work Experience and Career Exploration Programs—29 CFR Part 570.35A; and (2) Regulations to Implement the Remedial Education Provisions of the Fair Labor Standards Amendments of 1989—29 CFR 516.34. Copies of the proposed information collection requests can be obtained by contacting the office listed below in the addressee section of this notice.

DATES: Written comments must be submitted to the office listed in the addressee section below on or before February 26, 1997. The Department of Labor is particularly interested in comments which:

- evaluate whether the proposed collection of information is necessary for the performance of the functions of the agency, including whether the information will have practical utility;
- evaluate the accuracy of the agency's estimate of the burden of the proposed collection of information, including the validity of the methodology and assumptions used;
- enhance the quality, utility and clarity of the information to be collected; and
- minimize the burden of the collection of information on those who are to respond, including through the use of appropriate automated, electronic, mechanical, or other technological collection techniques or other forms of information technology, e.g., permitting electronic submissions of responses.

ADDRESSEE: Mr. Rich Elman, U.S. Department of Labor, 200 Constitution Ave., N.W., Room S–3201, Washington, D.C. 20210, telephone (202) 219–6375 (this is not a toll-free number), fax 202–219–6592.

SUPPLEMENTARY INFORMATION:

Work Experience and Career Exploration Programs (WECEP)—29 CFR Part 570.35A

I. Background: Section (3)(1) of the Fair Labor Standards Act (FLSA) provides the Secretary of Labor with the authority to prescribe employment standards for minors under the age of 18. It further permits the waiver of those standards for minors between 14 and 15 years of age in occupations other than manufacturing and mining, where such employment is confined to periods which will not interfere with the health and well-being of such minors. Section 570.35(b)(2) requires a State Educational Agency to file an application for approval of a State WECEP program as one not interfering with schooling or with the health and well-being of the minors involved and therefore not constituting oppressive child labor. Section 570.35a(b)(3)(vi) of the regulations requires each student participating in a WECEP to execute a written training agreement signed by the teacher-coordinator, the employer and the student and signed or otherwise consented by the student's parent or guardian. Section 570.35a(b)(4)(ii) of the regulations requires that the State Educational Agency keep a record of the names and addresses of each school enrolling WECEP students and the number of enrollees in each unit. A copy of the written training agreement for each student participating in the program is to be kept in the State Educational Agency Office or in the local educational office for a period of 3 years from the date of enrollment in the program.

II. Current Actions: The Department of Labor seeks extension approval to collect this information to carry out its responsibility to determine whether a WECEP program meets requirements specified in Section 570.35a of the Regulations, 29 CFR Part 570, as necessary to permit the employment of minors 14 and 15 years of age under conditions and in occupations which are otherwise prohibited by Child Labor Regulation 3. Without this information, the Administrator, Wage and Hour Division, would not have the means to determine whether or not the proposed program meets the regulatory criteria.

Regulations to Implement the Remedial Education Provisions of the Fair Labor Standards Amendments of 1989—29 CFR 516.34

I. Background: The Fair Labor Standards Act (FLSA) sets minimum wage, overtime (OT) pay, child labor and recordkeeping standards. The requirements apply to employees engaged in interstate commerce or in the production of goods for interstate commerce and to employees in certain enterprises (including employees of a public agency). However, the law provides exemptions for some of its standards for employees in certain types of employment. Pursuant to Sec. 7(q) of the FLSA, as amended, employees who lack a high school diploma or whose reading level or basic skills are at or below the eighth grade level may be required to attend up to ten hours per week of remedial education. The employer-provided remedial education must be designed to provide these basic skills or to fulfill the requirements for a high school diploma or General Education Development (GED) Certificate and may not include job-specific training. Employees subject to OT provisions of the FLSA ordinarily must be paid one and one-half times their regular rates of pay for all hours worked over 40 in each workweek (FLSA Sec. 7 (a)). The additional hours devoted to such remedial education, whether voluntarily attended by the employee or required as a condition of employment would not have to be compensated at the time and one-half OT rate set forth in FLSA Sec. 7(a). However, employees must receive compensation at their regular rate of pay for time spent receiving such remedial education. The basic recordkeeping requirements for employers of employees subject to the FLSA are contained in Regulations, 29 CFR Part 516, Records to be Kept by Employers.

II. Current Actions: The Department of Labor seeks extension approval to collect this information to carry out its responsibility to review and determine employers' compliance with Sec. 7(q) of FLSA. Failure to require such records to be kept would make it very difficult to determine compliance.

Current Actions: The Department of Labor seeks extension approval to collect this information to carry out its responsibility to review and determine employers' compliance with Sec. 7(q) of FLSA. Failure to require such records to be kept would make it very difficult to determine compliance.

Type of Review: Extension.

Agency: Employment Standards Administration.

Title: Work Experience and Career Exploration Programs (WECEP)—29 CFR Part 570.35A.

OMB Number: 1215–0121.

Affected Public: State or Local or Tribal government; Individuals or households.

Total Respondents: 16,016.

Frequency: Biennially.

Total Responses: 16,016.

Estimated Time per Response for Reporting: 2 hours per WECEP application; 1 hour per training agreement.

Average Time per Response for Recordkeeping: 2 hours per WECEP; one-half minute per training agreement.

Estimated Total Burden Hours: 8,166.

Total Burden Cost (capital/startup): $0.

Total Burden Cost (operating/maintenance): $3.00.

Type of Review: Extension.

Agency: Employment Standards Administration

Title: Regulations to Implement the Remedial Education Provisions of the Fair Labor Standards Amendments of 1989—29 CFR 516.34.

OMB Number: 1215–0175.

Affected Public: Business or other for-profit; Not-for-profit institutions; State or Local or Tribal government.

Total Respondents: 15,000.

Frequency: On occasion.

Total Responses: 15,000.

Average Time Per Response for Reporting: 10 minutes per affected employee per year.

Estimated Total Burden Hours: 5,000.

Total Burden Cost (capital/startup): $0.

Total Burden Cost (operating/maintenance): $0.

Comments submitted in response to this notice will be summarized and/or included in the request for Office of Management and Budget approval of the information collection request; they will also become a matter of public record.

Dated: December 19, 1996.

Cecily A. Rayburn,

Director, Division of Financial Management, Office of Management, Administration and Planning, Employment Standards Administration.

[FR Doc. 96–32789 Filed 12–24–96; 8:45 am]

BILLING CODE 4510–27–M

Mine Safety and Health Administration

Proposed Information Collection Request Submitted for Public Comment and Recommendations; Roof Control Plans

ACTION: Notice.

SUMMARY: The Department of Labor, as part of its continuing effort to reduce paperwork and respondent burden conducts a preclearance consultation program to provide the general public and Federal agencies with an opportunity to comment on proposed and/or continuing collections of information in accordance with the Paperwork Reduction Act of 1995 (PRA95) [44 U.S.C. 3506(c)(2)(A)]. This program helps to ensure that requested data can be provided in the desired format, reporting burden (time and financial resources) is minimized, collection instruments are clearly understood, and the impact of collection requirements on respondents can be properly assessed.

Currently, the Mine Safety and Health Administration (MSHA) is soliciting comments concerning the proposed extension of the information collection related to Roof Control Plans. MSHA is particularly interested in comments which:

- evaluate whether the proposed collection of information is necessary for the proper performance of the functions of the agency, including whether the information will have practical utility;
- evaluate the accuracy of the agency's estimate of the burden of the proposed collection of information, including the validity of the methodology and assumptions used;
- enhance the quality, utility, and clarity of the information to be collected; and
- minimize the burden of the collection of information on those who are to respond, including through the use of appropriate automated, electronic, mechanical, or other technological collection techniques or other forms of information technology, e.g., permitting electronic submissions of responses.

A copy of the proposed information collection request can be obtained by contacting the employee listed below in the Contact section of this notice.

DATES: Submit comments on or before February 24, 1997.

ADDRESSES: Written comments shall be mailed to Patricia W. Silvey, Director, Office of Standards, Regulations, and Variances, 4015 Wilson Boulevard, Room 627, Arlington, VA 22203–1984. Commenters are encouraged to send their comments on a computer disk, or via E-mail to psilvey@msha.gov, along with an original printed copy. Ms. Silvey can be reached at (703) 235–1910 (voice) or (703) 235–5551 (facsimile).

FOR FURTHER INFORMATION CONTACT: George M. Fesak, Director, Office of Program Evaluation and Information Resources, U.S. Department of Labor, Mine Safety and Health Administration, Room 715, 4015 Wilson Boulevard, Arlington, VA 22203–1984. Mr. Fesak can be reached at gfesak@msha.gov (Internet E-mail), (703) 235-8378 (voice), or (703) 235–1563 (facsimile).

SUPPLEMENTARY INFORMATION:

I. Background

Section 302(a) of the Federal Mine Safety and Health Act of 1977 (Mine Act), 30 U.S.C. § 846, requires that a roof control plan and revisions thereof suitable to the roof conditions and mining system of each coal mine be first approved by the Secretary of Labor (Secretary) before implementation by the operator. The plan must show the type of support and spacing approved by the Secretary, and the plan must be reviewed at least every 6 months by the Secretary.

Under 30 CFR § 75.221, the information required to be submitted and approved in the roof control plan includes the following: (1) the name and address of the company; (2) the name, address, mine identification number and location of the mine; (3) the name and title of the company official responsible for the plan; (4) a description of the mine strata; (5) a description and drawings of the sequence of installation and spacing of supports for each method of mining used; (6) the maximum distance that an ATRS system is to be set beyond the last row of permanent support (if appropriate); (7) specifications and installation procedures for liners or arches (if appropriate); (8) drawings indicating the planned width of openings, size of pillars, method of pillar recovery, and the sequence of mining pillars; (9) a list of all support materials required to be used in the roof, face and rib control system; (10) the intervals at which test holes will be drilled (if appropriate); and (11) a

description of the methods to be used for the protection of persons. Roof control plans are evaluated by Mine Safety and Health Administration (MSHA) specialists on the basis of the criteria set forth in 30 CFR 75.222. The District Manager may require additional measures in plans and may approve roof control plans that do not conform to the applicable criteria in this section, provided that effective control of the roof, face, and ribs can be maintained.

Under 30 CFR 75.223, a mine operator is required to propose revisions to the roof control plan when conditions indicate that the plan is not suitable for controlling the roof, face, ribs, or coal or rock bursts, or when accident and injury experience at the mine indicates the plan is inadequate. Revisions shall also contain a mine map plot of each unplanned roof or rib fall and coal or rock burst that occurs in the active workings when certain criteria are met. The regulations also requires MSHA to review the plan every six months.

II. Current Actions

Falls of roof, face and rib continue to be a leading cause of injuries and death in underground coal mines. All underground coal mine operators are required to develop and submit roof control plans to MSHA for evaluation and approval. These plans provide the means to instruct miners, who install roof supports, in the minimum requirements and placement of roof supports. The plan also provides a reference for mine supervisors to assist them in compliance with the plan requirements. In that regard the plan is a working document for the miners.

Type of Review: Extension.

Agency: Mine Safety and Health Administration.

Title: Roof Control Plans (30 CFR 75.220, 75.221, and 75.223).

Agency Number: 1219–0004.

Recordkeeping: Indefinite.

Affected Public: Business or other for-profit.

Cite/reference	Total respondents	Frequency	Total responses	Average time per response	Burden hours
75.220	12	On occasion	12	24 hours	288
75.223	1,105	On occasion	2,391	5 hours	11,955
75.223(b)	1,117	On occasion	2,025	5 minutes	162
Totals	2,234		4,428	2.8 hours	12,405

Estimated Total Burden Costs: $12,015.

Comments submitted in response to this notice will be summarized and/or included in the request for Office of Management and Budget approval of the information collection request; they will also become a matter of public record.

Dated: December 18, 1996.

George M. Fesak,

Director, Program Evaluation and Information Resources.

[FR Doc. 96–32790 Filed 12–24–96; 8:45 am]

BILLING CODE 4510–43–M

Proposed Information Collection Request Submitted for Public Comment and Recommendations; Notification of Commencement of Operations and Closing of Mines

ACTION: Notice.

SUMMARY: The Department of Labor, as part of its continuing effort to reduce paperwork and respondent burden conducts a preclearance consultation program to provide the general public and Federal agencies with an opportunity to comment on proposed and/or continuing collections of information in accordance with the Paperwork Reduction Act of 1995 (PRA95) [44 U.S.C. 3506(c)(2)(A)]. This program helps to ensure that requested data can be provided in the desired format, reporting burden (time and financial resources) is minimized, collection instruments are clearly understood, and the impact of collection requirements on respondents can be properly assessed.

Currently, the Mine Safety and Health Administration (MSHA) is soliciting comments concerning the proposed new/revision/extension/reinstatement of the information collection related to the Notification of Commencement of Operations and Closing of Mines. MSHA is particularly interested in comments which:

- evaluate whether the proposed collection of information is necessary for the proper performance of the functions of the agency, including whether the information will have practical utility;
- evaluate the accuracy of the agency's estimate of the burden of the proposed collection of information, including the validity of the methodology and assumptions used;
- enhance the quality, utility, and clarity of the information to be collected; and
- minimize the burden of the collection of information on those who are to respond, including through the use of appropriate automated, electronic, mechanical, or other technological collection techniques or other forms of information technology, e.g., permitting electronic submissions of responses.

A copy of the proposed information collection request can be obtained by contacting the employee listed below in the Addressee section of this notice.

DATES: Submit comments on or before February 24, 1997.

ADDRESSES: Written comments shall be mailed to Patricia W. Silvey, Director, Office of Standards, Regulations, and Variances, 4015 Wilson Boulevard, Room 627, Arlington, VA 22203–1984. Commenters are encouraged to send their comments on a computer disk, or via E-mail to psilvey@msha.gov, along with an original printed copy. Ms. Silvey can be reached at (703) 235–1910 (voice) or (703) 235–5551 (facsimile).

FOR FURTHER INFORMATION CONTACT:

George M. Fesak, Director, Office of Program Evaluation and Information Resources, U.S. Department of Labor, Mine Safety and Health Administration, Room 715, 4015 Wilson Boulevard, Arlington, VA 22203–1984. Mr. Fesak can be reached at gfesak@msha.gov (Internet E-mail), (703) 235–8378 (voice), or (703) 235–1563 (facsimile).

SUPPLEMENTARY INFORMATION:

I. Background

Under 30 CFR §§ 56.1000 and 57.1000, operators of metal and nonmental mines must notify the Mine Safety and Health Administration (MSHA) when the operation of a mine will commence or when a mine is closed. Openings and closings of mines are dictated by the economic strength of the commodity mined, and by weather conditions which prevail at the mine site during various seasons.

MSHA must be aware of openings and closing so that its resources can be used efficiently in achieving the requirements of the Mine Act.

II. Current Actions

Section 103(a) of the Federal Mine Safety and Health Act of 1977 (Mine Act), 30 U.S.C. § 813, requires that each underground mine be inspected in its entirety at lease four times a year, and each surface mine at least two times per year. Mines which operate only during warmer weather must be scheduled for inspection during the spring, summer and autumn seasons. Mines are sometimes located a great distance from MSHA field offices and the notification required by this standard precludes wasted time and trips.

Type of Review: Reinstatement (without change).

Agency: Mine Safety and Health Administration.

Title: Notification of Commencement of Operations and Closing of Mines.

OMB Number: 1219–0092.

Affected Public: Business or other for-profit.

Cite/Reference/Form/etc: 30 CFR 56.1000 and 57.1000.

Total Respondents: 2,300.

Frequency: On occasion.

Total Responses: 2,070.

Average Time per Response: .125 hours.

Estimated Total Burden Hours: 259 hours.

Estimated Total Burden Cost: $1,438.

Comments submitted in response to this notice will be summarized and/or included in the request for Office of Management and Budget approval of the information collection request; they will also become a matter of public record.

Dated: December 18, 1996.

George M. Fesak,

Director, Program Evaluation and Information Resources.

[FR Doc. 96–32791 Filed 12–24–96; 8:45 am]

BILLING CODE 4510–43–M

NATIONAL FOUNDATION ON THE ARTS AND THE HUMANITIES

National Endowment for the Arts; Combined Arts Advisory Panel Meeting

Pursuant to Section 10(a)(2) of the Federal Advisory Committee Act (Public Law 92–463), as amended, notice is hereby given that a meeting of the Combined Arts Advisory Panel (Planning & Stabilization Section) to the National Council on the Arts will be held on January 13–16, 1997 in Room 716 at the Nancy Hanks Center, 1100 Pennsylvania Avenue, N.W., Washington, D.C., 20506. The meeting will take place from 9:00 a.m. to 7:30 p.m. on January 13, 14 and 15 and from 9:00 a.m. to 5:00 p.m. on January 16.

This meeting will be open to the public from 2:30 p.m. to 5:00 p.m. on January 16 for a discussion of guidelines and policy related issues. The remaining portions of the meeting, from 9:00 a.m. to 7:30 p.m. on January 13, 14, and 15 and from 9:00 a.m. to 2:30 p.m. on January 16, are for the purpose of Panel review, discussion, evaluation, and recommendation on applications for financial assistance under the National Foundation on the Arts and the Humanities Act of 1965, as amended, including information given in confidence to the agency by grant applicants. In accordance with the June 22, 1995 determination of the Chairman, these sessions will be closed to the public pursuant to subsection (c)(4) (6) and (9)(B) of section 552b of Title 5, United States Code.

Any person may observe meetings, or portions thereof, of advisory panels which are open to the public, and may be permitted to participate in the panel's discussions at the discretion of the panel chairman and with the approval of the full-time Federal employee in attendance.

If you need special accommodations due to a disability, please contact the Office of AccessAbility, National Endowment for the Arts, 1100 Pennsylvania Avenue, NW, Washington, D.C. 20506, 202/682–5532, TYY/TDD 202/682–5496, at least seven (7) days prior to the meeting.

Further information with reference to this meeting can be obtained from Ms. Kathy Plowitz-Worden, Panel Coordinator, National Endowment for the Arts, Washington, D.C. 20506, or call (202) 682–5691.

Dated: December 16, 1996.

Kathy Plowitz-Worden,

Panel Coordinator, National Endowment for the Arts.

[FR Doc. 96–32709 Filed 12–24–96; 8:45 am]

BILLING CODE 7537–01–M

National Endowment for the Arts; Combined Arts Advisory Panel Meeting

Pursuant to Section 10(a)(2) of the Federal Advisory Committee Act (Public Law 92–463), as amended, notice is hereby given that a meeting of the Combined Arts Advisory Panel (Creation & Presentation Section #2) to the National Council on the Arts will be held on January 6–10, 1997.

The meeting will be held from 9:00 a.m. to 7:30 p.m. on January 6 and January 7; from 9:00 a.m. to 8:30 p.m. on January 8 and 9; and from 9:00 a.m. to 5:00 p.m. on January 10. This meeting will be held in Room 716, at the Nancy Hanks Center, 1100 Pennsylvania Avenue, N.W., Washington, D.C., 20506.

A portion of this meeting, from 2:30 p.m. to 5:00 p.m. on January 10, will be open to the public for a discussion of guidelines and policy related issues.

The remaining portions of this meeting, from 9:00 a.m. to 7:30 p.m. on January 6 and January 7; from 9:00 a.m. to 8:30 p.m. on January 8 and 9; and from 9:00 a.m. to 2:30 p.m. on January 10, are for the purpose of Panel review, discussion, evaluation, and recommendation on applications for financial assistance under the National Foundation on the Arts and the Humanities Act of 1965, as amended, including information given in confidence to the agency by grant applicants. In accordance with the determination of the Chairman of June 22, 1995, these sessions will be closed to the public pursuant to subsection (c)(4),(6) and (9)(B) of section 552b of Title 5, United States Code.

Any person may observe meetings, or portions thereof, or advisory panels which are open to the public, and may be permitted to participate in the panel's discussions at the discretion of the panel chairman and with the approval of the full-time Federal employee in attendance.

If you need special accommodations due to a disability, please contact the Office of AccessAbility, National Endowment for the Arts, 1100 Pennsylvania Avenue, N.W., Washington, D.C. 20506, 202/682–5532, TDY–TDD 202/682–5496, at least seven (7) days prior to the meeting.

Further information with reference to this meeting can be obtained from Ms. Kathy Plowitz-Worden, Panel Coordinator, National Endowment for the Arts, Washington, D.C. 20506, or call (202) 682–5691.

Dated: December 16, 1996.

Kathy Plowitz-Worden,

Panel Coordinator, National Endowment for the Arts.

[FR Doc. 96–32803 Filed 12–24–96; 8:45 am]

BILLING CODE 7537–01–M

Meetings of Humanities Panel

AGENCY: National Endowment for the Humanities.

ACTION: Notice of meetings.

SUMMARY: Pursuant to the provisions of the Federal Advisory Committee Act (Public Law 92–473, as amended), notice is hereby given that the following meetings of the Humanities Panel will be held at the Old Post Office, 1100 Pennsylvania Avenue, N.W., Washington, D.C. 20506.

FOR FURTHER INFORMATION CONTACT: Michael S. Shapiro, Advisory Committee Management Officer, National Endowment for the Humanities, Washington, D.C. 20506; telephone (202) 606–8322. Hearing-impaired individuals are advised that information on this matter may be obtained by contacting the Endowment's TDD terminal on (202) 606–8282.

SUPPLEMENTARY INFORMATION: The proposed meetings are for the purpose of panel review, discussion, evaluation and recommendation on applications for financial assistance under the National Foundation on the Arts and the Humanities Act of 1965, as amended, including discussion of information given in confidence to the agency by the grant applicants. Because the proposed meetings will consider information that is likely to disclose: (1) trade secrets and commercial or financial information obtained from a person and privileged or confidential; or (2) information of a personal nature the disclosure of which would constitute a clearly unwarranted invasion of personal privacy, pursuant to authority granted me by the Chairman's Delegation of Authority to Close Advisory Committee meetings, dated July 19, 1993, I have determined that this meeting will be closed to the public pursuant to subsections (c) (4), and (6) of section 552b of Title 5, United States Code.

1. *Date:* January 6, 1997
   Time: 8:30 a.m. to 5:00 p.m.
   Room: 430
   Program: This meeting will review applications for Education Development and Demonstration in Literature and Composition, K–16 submitted to the Division for Research and Education, for projects at the October 1, 1996 deadline.
2. *Date:* January 7, 1997
   Time: 8:30 a.m. to 5:00 p.m.
   Room: 317
   Program: This meeting will review applications for Collaborative Research in Near Eastern Studies, submitted to the Division of Research and Education for projects at the September 1, 1996 deadline.
3. *Date:* January 8, 1997
   Time: 8:30 a.m. to 5:00 p.m.
   Room: 430
   Program: This meeting will review applications for Education Development and Demonstration in Hispanic/Native American Studies, K–16 submitted to the Division of Research and Education for projects at the October 1, 1996 deadline.
4. *Date:* January 8, 1997
   Time: 8:30 a.m. to 5:00 p.m.
   Room: 317
   Program: This meeting will review applications for Collaborative Research in Cultural and Religious Studies submitted to the Division of Research and Education, for projects at the September 1, 1996 deadline.
5. *Date:* January 10, 1997
   Time: 8:30 a.m. to 5:00 p.m.
   Room: 317
   Program: This meeting will review applications for Fellowship Programs at Independent Research Institutions submitted to the Division of Research and Education, for projects at the October 1, 1996 deadline.
6. *Date:* January 10, 1997
   Time: 8:30 a.m. to 5:00 p.m.
   Room: 430
   Program: This meeting will review applications for Education Development and Demonstration in African/Asian Studies, K–16 submitted to the Division of Research and Education, for projects at the October 1, 1996 deadline.
7. *Date:* January 14, 1997
   Time: 8:30 a.m. to 5:00 p.m.
   Room: 430
   Program: This meeting will review applications for Education Development and Demonstration in Foreign Languages, K–16 submitted to the Division of Research and Education, for projects at the October 1, 1996 deadline.

Michael S. Shapiro,

Advisory Committee Management Officer.

[FR Doc. 96–32765 Filed 12–24–96; 8:45 am]

BILLING CODE 7536–01–M

NATIONAL SCIENCE FOUNDATION

Special Emphasis Panel in Bioengineering and Environmental Systems; Notice of Meeting

In accordance with the Federal Advisory Committee Act (Pub. L. 92–463, as amended), the National Science Foundation announces the following meeting.

Name: Special Emphasis Panel in Bioengineering and Environmental Systems (No. 1189).

Date and Time: January 21–22, 1997; 8:00 a.m.–5:00 p.m.

Place: National Science Foundation, 4201 Wilson Boulevard, Room 390, Arlington, VA 22230.

Type of Meeting: Closed.

Contact Person: H. Frederick Bowman, Program Director, Biomedical Engineering and Research to Aid Persons with Disabilities, Division of Bioengineering and Environmental Systems, National Science Foundation, 4201 Wilson Boulevard, Arlington, VA 22230, Telephone: (703) 306–1318.

Purpose of Meeting: To provide advice and recommendations concerning proposals submitted to NSF for financial support.

Agenda: To review and evaluate proposals as part of the selection process for awards.

Reason for Closing: The proposals being reviewed include information of a proprietary or confidential nature, including technical information, financial data, such as salaries; and personal information concerning individuals associated with the proposals. These matters are exempt under 5 U.S.C. 552b(c), (4) and (6) of the Government in the Sunshine Act.

M. Rebecca Winkler,

Committee Management Officer.

[FR Doc. 96–32814 Filed 12–24–96; 8:45 am]

BILLING CODE 7555–01–M

Special Emphasis Panel in Chemical and Transport Systems (#1190); Notice of Meetings

In accordance with the Federal Advisory Committee Act (Pub. L. 92–463, as amended), the National Science Foundation announces the following meeting:

Name: Special Emphasis Panel in Chemical and Transport Systems (#1190).

Date and Time: January 22, 1997; 8:30 a.m. to 5:00 p.m.

Place: National Science Foundation, 4201 Wilson Boulevard, Room 580, Arlington, VA 22230, (703) 306–1371.

Type of Meeting: Closed.

Contact Person: Dr. Robert M. Wellek and Dr. Vijay John Program Directors, Interfacial, Transport and Separation Processes, Division of Chemical and Transport Systems (CTS), Room 525, (703) 306–1371.

Purpose of Meeting: To provide advice and recommendations concerning proposals submitted to NSF for financial support.

Agenda: To review and evaluate nominations for the FY97 Faculty Early Career Development proposals as part of the selection process for awards.

Reason for Closing: The proposals being reviewed include information of a proprietary or confidential nature, including technical information; financial data, such as salaries and personal information concerning individuals associated with the proposals. These matters are exempt under 5 U.S.C. 552b(c) (4) and (6) of the Government in the Sunshine Act.

M. Rebecca Winkler,

Committee Management Officer.

[FR Doc. 96–32802 Filed 12–24–96; 8:45 am]

BILLING CODE 7555–01–M

Faculty Early Career Award Panel in Chemical and Transport Systems; Notice of Meetings

In accordance with the Federal Advisory Committee Act (Pub. L. 92–463, as amended), the National Science Foundation announces the following meeting:

Name: Special Emphasis Panel in Chemical and Transport Systems (#1190).

Date and Time: January 16–17, 1997; 8:30 a.m. to 5:00 p.m.

Place: National Science Foundation 4201 Wilson Boulevard, Room 530, Arlington, VA 22230, (703) 306–1371.

Type of Meeting: Closed

Contact Person: Drs. M. C. Roco and Roger E. A. Arndt, Program Directors, Fluid, Particulate, and Hydraulic Systems, Division of Chemical and Transport Systems (CTS), Room 525, (703) 306–1371.

Purpose of Meeting: To provide advice and recommendations concerning proposals submitted to NSF for financial support

Agenda: To review and evaluate nominations for the FY97 Faculty Early Career Development Program proposals as part of the selection process for awards.

Reason for Closing: The proposals being reviewed include information of a proprietary or confidential nature, including technical information; financial data, such as salaries and personal information concerning individuals associated with the proposals. These matters are exempt under 5 U.S.C. 552b(c)(4) and (6) of the Government in the Sunshine Act.

M. Rebecca Winkler,

Committee Management Officer.

[FR Doc. 96–32859 Filed 12–24–96; 8:45 am]

BILLING CODE 7555–01–M

Faculty Early Career Award Panel in Chemical and Transport Systems; Notice of Meetings

In accordance with the Federal Advisory Committee Act (Pub. L. 92–463, as amended), the National Science Foundation announces the following meeting:

Name: Special Emphasis Panel in Chemical and Transport Systems (#1190).

Date and Time: January 22, 1997; 8:30 a.m. to 5:00 p.m.

Place: National Science Foundation, 4201 Wilson Boulevard, Room 1280, Arlington, VA 22230, (703) 306–1371.

Type of Meeting: Closed.

Contact Person: Dr. Timothy W. Tong, Program Director, Thermal Transport and Thermal Processing, Division of Chemical and Transport Systems (CTS), Room 525, (703) 306–1371.

Purpose of Meeting: To provide advice and recommendations concerning proposals submitted to NSF for financial support.

Agenda: To review and evaluate nominations for the FY97 Faculty Early Career Development Program proposals as part of the selection process for awards.

Reason for Closing: The proposals being reviewed include information of a proprietary or confidential nature, including technical information; financial data, such as salaries and personal information concerning individuals associated with the proposals. These matters are exempt under 5 U.S.C. 552b(c) (4) and (6) of the Government in the Sunshine Act.

M. Rebecca Winkler,

Committee Management Officer.

[FR Doc. 96–32860 Filed 12–24–96; 8:45 am]

BILLING CODE 7555–01–M

Faculty Early Career Award Panel in Chemical and Transport Systems; Notice of Meetings

In accordance with the Federal Advisory Committee Act (Pub. L. 92–463, as amended), the National Science Foundation announces the following meeting:

Name: Special Emphasis Panel in Chemical and Transport Systems (#1190)

Date and Time: January 27, 1997; 8:30 a.m. to 5:00 p.m.

Place: National Science Foundation, 4201 Wilson Boulevard, Room 320, Arlington, VA 22230, (703) 306–1371.

Type of Meeting: Closed.

Contact Person: Dr. Farley Fisher, Program Director, Combustion and Thermal Plasma, Division of Chemical and Transport Systems (CTS), Room 525, (703) 306–1371.

Purpose of Meeting: To provide advice and recommendations concerning proposals submitted to NSF for financial support.

Agenda: To review and evaluate nominations for the FY97 Faculty Early Career Development Program proposals as part of the selection process for awards.

Reason for Closing: The proposals being reviewed include information of a proprietary or confidential nature, including technical information; financial data, such as salaries and personal information concerning individuals associated with the proposals. The matters are exempt under 5 U.S.C. 552b(c) (4) and (6) of the Government in the Sunshine Act.

M. Rebecca Winkler,

Committee Management Officer.

[FR Doc. 96–32861 Filed 12–24–96; 8:45 am]

BILLING CODE 7555–01–M

Special Emphasis Panel in Civil and Mechanical Systems; Notice of Meeting

In accordance with the Federal Advisory Committee Act (Pub. L. 92–463, as amended), the National Science Foundation announces the following meeting.

Name: Special Emphasis Panel in Civil and Mechanical Systems (1205).

Date & Time: January 16 & 17, 1997; 8:00 AM–6:00 PM

Place: Room 580, National Science Foundation, 4201 Wilson Blvd., Arlington, VA

Type of Meeting: Closed.

Contact Persons: Priscilla P. Nelson, Division of Civil and Mechanical Systems, National Science Foundation, 4201 Wilson Blvd., Arlington, VA 22230. Telephone: (703) 306–1361.

Purpose of Meeting: To provide advice and recommendations concerning proposals submitted to NSF for financial support.

Agenda: To review and evaluate proposals as part of the selection process for awards.

Reasons for Closing: The proposals being reviewed include information of a proprietary or confidential nature, including technical information; financial data, such as salaries; and personal information concerning individuals associated with the proposals. These matters are exempt under 5 U.S.C. 552b(c) (4) and (6) of the Government in the Sunshine Act.

M. Rebecca Winkler,

Committee Management Officer.

[FR Doc. 96–32815 Filed 12–24–96; 8:45 am]

BILLING CODE 7555–01–M

National Science Foundation

Special Emphasis Panel in Electrical and Communications Systems; Notice of Meeting

In accordance with the Federal Advisory Committee Act (Pub. L. 92–463, as amended), the National Science Foundation announces the following meeting:

Name: Special Emphasis Panel in Electrical and Communications System (1196)

Date and Time: January 20–21, 1997; 8:30 a.m. to 5:00 p.m.

Place: Rooms 530, 630, and 680 on Jan. 20, Room 580 on Jan 21, National Science Foundation, 4201 Wilson Boulevard, Arlington, VA

Type of Meeting: Closed

Contact Persons: Dr. Deborah Crawford, Program Director, Solid State and Microstructures, Dr. Rajinder Khosla, Program Director, Solid State and Microstructures, Dr. Virginia Ayres, Program Director, Quantum Electronics, Waves and Beams, Division of Electrical and Communications Systems, NSF, 4201 Wilson Boulevard, Room 675, Arlington, VA 22230, Telephone: (703) 306–1339 Purpose: To provide advice and recommendations concerning proposals submitted to NSF for financial support.

Agenda: To review and evaluate CAREER proposals as part of the selection process for awards. Reasons for Closing: The proposals being reviewed include information of a proprietary or confidential nature, including technical information, financial data, such as salaries; and personal information concerning individuals associated with the proposals. These matters are within exemptions 4 and 6 of 5 U.S.C. 552b.(c) (4)

and (6) of the Government in the Sunshine Act.

M. Rebecca Winkler,

Committee Management Officer.

[FR Doc. 96–32816 Filed 12–24–96; 8:45 am]

BILLING CODE 7555–01–M

NATIONAL SCIENCE FOUNDATION

Special Emphasis Panel in Mathematical Sciences; Notice of Meeting

In accordance with the Federal Advisory Committee Act (Pub. L. 92–463, as amended), the National Science Foundation announces the following meeting.

Name and Committee Code: Special Emphasis in Mathematical Sciences (1204).

Date and Time: January 16–18, 1997; 8:30 a.m. until 5:00 p.m.

Place: National Science Foundation, 4201 Wilson Boulevard, Arlington, VA 22230 Room 340.

Type of Meeting: Closed.

Contact Person: Dr. Subramaniya I. Hariharan, Program Director, National Science Foundation, 4201 Wilson Boulevard, Arlington, VA 22230, Room 1025 Telephone: (703) 306–1877.

Purpose of Meeting: To provide advice and recommendations concerning proposals submitted to NSF for financial support.

Agenda: To review and evaluate proposals concerning the Applied and Computations Mathematics Programs as part of the selection process for awards.

Reason for Closing: The proposals being reviewed include information of a proprietary or confidential nature, including technical information, financial data, such as salaries and personal information concerning individuals associated with the proposals. These matters are exempt under 5 U.S.C. 552b(c) (4) and (6) of the Governmental in the Sunshine Act.

M. Rebecca Winkler,

Committee Management Officer.

[FR Doc. 96–32817 Filed 12–24–96; 8:45 am]

BILLING CODE 7555–01–M

Special Emphasis Panel in Mathematical Sciences (#1204)

In accordance with the Federal Advisory Committee Act (Pub. L. 92–463, as amended), the National Science Foundation announces the following meeting:

Name: Special Emphasis Panel in Mathematical Sciences (#1204).

Date and Time: January 6–7, 1997.

Place: Room 380, NSF, 4201 Wilson Boulevard, Arlington, VA.

Type of Meeting: Closed.

Contact Person: J. Whitehurst, National Science Foundation, 4201 Wilson Blvd., Room 1025, Arlington, VA 22230, Tel: (703) 306–1666.

Purpose of Meeting: To provide advice and recommendations concerning proposals submitted to NSF for financial support.

Agenda: To review and evaluate proposals submitted to the Mathematical Science Division.

Reason for Closing: The proposals being reviewed include information of a proprietary or confidential nature, including technical information, financial data, such as salaries; and personal information concerning individuals associated with the proposals. These matters are within exemptions (4) and (6) of 5 U.S.C. 552b(c), the Government in the Sunshine Act.

M. Rebecca Winkler,

Committee Management Officer.

[FR Doc. 96–32818 Filed 12–24–96; 8:45 am]

BILLING CODE 7555–01–M

Special Emphasis Panel in Undergraduate Education; Notice of Meeting

In accordance with the Federal Advisory Committee Act (Pub. L.92–463, as amended), the National Science Foundation announces the following meeting:

Name: Special Emphasis Panel in Undergraduate Education (1214).

Date and Time: January 14th (7:30 p.m. to 9:00 p.m.), January 15th (8:30 a.m. to 5:00 p.m.) and January 16th (8:30 a.m. to 3:00 p.m.).

Place: Room 375, NSF, 4201 Wilson Boulevard, Arlington, VA.

Type of Meeting: Closed.

Contact Person: Dr. Terry Woodin, Program Director, Division of Undergraduate Education (DUE), Room 835, National Science Foundation, 4201 Wilson Blvd., Arlington, VA 22230, Tel: (703) 306–1666

Purpose of Meeting: To provide advice and recommendations concerning proposals submitted to NSF for financial support.

Agenda: To review and evaluate proposals submitted to the NSF Collaborative for Excellence in Teacher Reverse Site Panel Meeting.

Reason for Closing: The proposals being reviewed includes information of a proprietary or confidential nature, including technical information, financial data, such as salaries; and personal information concerning individuals associated with the proposals. These matters are within exemptions (4) and (6) of 5 U.S.C. 552b(c) the Government in the Sunshine Act.

M. Rebecca Winkler,

Committee Management Officer.

[FR Doc. 96–32819 Filed 12–24–96; 8:45 am]

BILLING CODE 7555–01–M

NUCLEAR REGULATORY COMMISSION

Commonwealth of Massachusetts: Staff Assessment of Proposed Agreement Between the Nuclear Regulatory Commission and the Commonwealth of Massachusetts

AGENCY: Nuclear Regulatory Commission.

ACTION: Notice of proposed agreement with the Commonwealth of Massachusetts.

SUMMARY: The U.S. Nuclear Regulatory Commission (NRC) has received, from the Governor of the Commonwealth of Massachusetts, a proposal to enter into an Agreement pursuant to Section 274 of the Atomic Energy Act of 1954, as amended (Act). The proposed Agreement would permit Massachusetts to assume certain portions of the Commission's regulatory authority. As required by the Act, NRC is publishing the proposed Agreement for public comment. NRC is also publishing a summary of the NRC staff assessment of the proposed Massachusetts radiation control program. Comments are requested on the proposed Agreement, especially public health and safety aspects, and the assessment.

The Agreement will effectively release (exempt) persons in Massachusetts from certain portions of the Commission's regulatory authority. The Act also requires that NRC publish those exemptions. Notice is hereby given that the pertinent exemptions have been previously published in the Federal Register and are codified in the Commission's regulations as 10 CFR Part 150.

DATES: The comment period expires January 23, 1997. Comments received after this date will be considered if it is practical to do so, but the Commission is able to assure consideration only for comments received on or before this date.

ADDRESSES: Written comments may be submitted to Mr. David L. Meyer, Chief, Rules Review and Directives Branch, Division of Freedom of Information and Publications Services, Office of Administration, Washington, DC 20555–0001. Copies of comments received by NRC may be examined at the NRC Public Document Room, 2120 L Street, NW. (Lower Level), Washington, DC. Copies of the proposed Agreement, along with copies of the request by Governor Weld including referenced enclosures, applicable legislation, regulations for the control of radiation, and the full text of the NRC staff assessment are also available for public

inspection in the NRC's Public Document Room.

FOR FURTHER INFORMATION CONTACT: Richard L. Blanton, Office of State Programs, U.S. Nuclear Regulatory Commission, Washington, DC 20555–0001. Telephone (301) 415–2322 or e-mail RLB@NRC.GOV.

SUPPLEMENTARY INFORMATION: The Commission has received a request from Governor William Weld of Massachusetts to enter into an Agreement whereby the NRC would discontinue, and the Commonwealth would assume, certain regulatory authority as specified in the Act. Section 274 of the Act authorizes the Commission to enter into such an agreement.

Section 274e of the Act requires that the terms of the proposed Agreement be published for public comment once each week for four consecutive weeks. This notice is being published in the Federal Register in fulfillment of the requirement.

I. Background

(a) Section 274d of the Act provides the mechanism whereby a State may assume regulatory authority, otherwise reserved to the NRC, over certain radioactive materials [1] and uses thereof. In a letter dated March 28, 1996, Governor Weld certified that the Commonwealth of Massachusetts has a program for the control of radiation hazards that is adequate to protect health and safety of the public within the Commonwealth with respect to the materials covered by the proposed Agreement, and that the Commonwealth desires to assume regulatory responsibility for these materials. Included with the letter was the text of the proposed Agreement, which is shown in Appendix A to this notice.

The specific authorities requested by the Commonwealth of Massachusetts under this proposed Agreement are (1) the regulation of byproduct materials as defined in Section 11e.(1) of the Act, (2) the regulation of source materials, (3) the regulation of special nuclear materials in quantities not sufficient to form a critical mass, (4) the evaluation of the safety of sealed sources and devices (containing materials covered by the Agreement) for distribution in interstate commerce, and (5) the land disposal of low-level radioactive waste (as defined in the Low-Level Radioactive Waste Policy Amendments Act of 1985, 42 U.S.C. 2021b) received from other persons. The Commonwealth does not wish to assume authority over the regulation of byproduct materials as defined in Section 11e.(2) of the Act, that is over tailings from the recovery of source materials from ore, but does reserve the right to apply at a future date for an amended agreement to assume authority in this area.

(b) The proposed agreement contains nine articles that (1) list the materials and activities to be covered by the Agreement; (2) specify the activity for which the Commission will retain regulatory authority; (3) allow for future amendment of the Agreement; (4) allow for certain regulatory changes by the Commission; (5) reference the continued authority of the Commission for purposes of safeguarding nuclear materials and restricted data; (6) commit the Commonwealth and NRC to exchange information necessary to maintain coordinated and compatible programs; (7) recognize reciprocity of licenses issued by the respective agencies; (8) identify criteria for the suspension or termination of the Agreement; and (9) specify the proposed effective date. The Commission reserves the option to modify the terms of the proposed Agreement in response to comments, to correct errors, and to make editorial changes in style. Also, because of several issues posed by this request which required resolution before the Agreement could be concluded, the effective date requested by the Governor could not be realized. The final text of the Agreement, with the actual effective date, will be published after the Agreement is approved by the Commission.

(c) The Massachusetts radiation control program currently regulates users of naturally-occurring and accelerator-produced radioactive materials, and users of certain radiation-producing electronic machines. The program was enabled by Massachusetts law (Massachusetts General Law [M.G.L.] Chapter 111, § 5B) in 1958. This statute was later replaced by M.G.L. Chapter 111, Sections 5M through 5P. In 1987, M.G.L. Chapter 111H was added to provide for the regulation of low-level radioactive waste. Section 7 of the legislation contains the authority for the Governor to enter into an Agreement with the Commission.

The Massachusetts regulations contain provisions for the orderly transfer of authority over NRC licenses to the regulatory control of the Commonwealth. After the effective date of this proposed Agreement, licenses issued by NRC will continue in effect under Massachusetts regulatory authority until these licenses expire or are replaced by Commonwealth issued licenses.

(d) The NRC staff assessment finds the proposed Massachusetts program adequate to protect public health and safety, and compatible with the NRC program for materials regulation.

II. Summary of the NRC Staff Assessment of the Massachusetts Program for the Control of Agreement Materials

NRC staff has examined the proposed Massachusetts radiation control program with respect to the ability of the program to regulate agreement materials. The examination was based on the Commission's policy statement *''Criteria for Guidance of States and NRC in Discontinuance of NRC Regulatory Authority and Assumption Thereof by States Through Agreement''* (referred to herein as the ''criteria'') (46 FR 7540; January 23, 1981, as amended).

(a) Organization and Personnel. The proposed program unit responsible for regulating agreement materials will consist of 13 technical/professional positions within the existing radiation control program of the Massachusetts Department of Public Health. The qualifications for staff members specified in the personnel position descriptions, and the qualifications of the current staff members, meet the criteria for education, training and experience. All current staff members hold at least bachelor's degrees in physical or life sciences, or have a combination of education and experience at least equivalent to a bachelor's degree. Most staff members hold advanced degrees, and have had additional training and experience in radiation protection. Senior staff have more than five years experience each in radiation control programs. The program director has a master's degree in public health and 15 years experience in regulatory health physics.

(b) Legislation and regulations. The Massachusetts Department of Public Health is designated by statute to be the radiation control agency. The Department is provided by statute with the authority to promulgate regulations, issue licenses, issue orders, conduct inspections, and to enforce compliance with regulations, license conditions, and orders. Licensees are required by law to provide access to inspectors.

The Department has adopted regulations (Massachusetts Regulations for the Control of Radiation or MRCR) providing radiation protection standards

[1] The materials, sometimes referred to as ''agreement materials,'' are: (a) Byproduct materials as defined in Section 11e.(1) of the Act; (b) Byproduct materials as defined in Section 11e.(2) of the Act; (c) Source materials as defined in Section 11z. of the Act; and (d) Special nuclear materials as defined in Section 11aa. of the Act, restricted to quantities not sufficient to form a critical mass.

essentially identical to the standards in 10 CFR Part 20. Technical definitions in the MRCR are also essentially identical. The MRCR require consideration of the total radiation doses to individuals from all sources of radiation (except background radiation and radiation from medical treatment or examinations, as is the case in the NRC rules), whether the sources are in the possession of the licensee or not. The MRCR also require appropriate surveys and personnel monitoring under the close supervision of technically competent people, and the use of radiation labels, signs and symbols essentially identical to those contained in 10 CFR Part 20. Posting requirements and instruction of workers requirements adopted in the MRCR are compatible with the equivalent current requirements of the NRC.

Nothing in the Massachusetts statutes or regulations seeks to regulate areas not permitted by the Atomic Energy Act. The MRCR contains a provision to avoid interference with those regulatory requirements imposed by NRC pursuant to the Act, and for which Commonwealth licensees have not been exempted under the agreement.

(c) *Storage and Disposal.* The MRCR also contains compatible requirements for the storage of radioactive material, and for the disposal of radioactive material as waste. The waste disposal requirements cover both waste disposal by material users and the land disposal of waste received from other persons. The NRC staff noted some differences in the MRCR waste regulations as compared to the NRC regulations in 10 CFR Part 61, but determined that the differences are related either to the prohibition of shallow land burial as a disposal technology or to the ownership of the disposal site by the Massachusetts Low-Level Radioactive Waste Management Board. Because of these special provisions, NRC staff determined that the differences in the regulations do not reduce the ability of the Massachusetts radiation control program to protect health and safety, nor reduce the compatibility of the program or the regulations themselves.

(d) *Transportation of Radioactive Material.* The MRCR contains rules equivalent to 10 CFR Part 71 as in effect prior to April 1, 1996. Effective on that date, the NRC amended Part 71. Under current policy, an existing Agreement State is allowed up to three years after NRC adopts a final rule to adopt a compatible rule, or to impose each regulatory provision of the rule using an alternate legally binding requirement (LBR), such as an order or license condition. A State seeking an agreement is expected to have effective rules or LBRs compatible with those of NRC in effect at the time the agreement becomes effective. The intent of this expectation is to spare licensees in the new Agreement State from the ''whipsaw'' effect of being subjected first to the new NRC requirements, then the old requirements when the agreement takes effect, then again to the new requirements when later adopted by the State. Massachusetts is in the process of adopting rules compatible with the revised 10 CFR Part 71. However, these rules may not become effective before the Agreement is signed. Massachusetts intends to impose the requirements of the new Part 71 rules in the interim by issuing appropriate orders to the affected licensees.

(e) *Recordkeeping and Incident Reporting.* The MRCR incident reporting requirements are similar to the requirements in the NRC rules. The NRC staff noted that for some NRC rules that specify a records retention period of less than five years, the retention period specified in the MRCR is shorter. The NRC staff concluded, however, that the retention periods specified in the MRCR rules are adequate since the retention periods are long enough to permit examination of the records during routine inspections. The MRCR imposes retention requirements similar to the NRC rules for records which must be retained indefinitely or until the license is terminated.

(f) *Evaluation of License Applications.* The MRCR contains requirements equivalent to the current NRC regulations specifying the required content of applications for licenses, renewals, and amendments. The MRCR also provides requirements equivalent to the NRC requirements for issuing licenses and specifying the terms and conditions of licenses. The agreement materials program unit has adopted a procedure for processing applications that assures the regulatory requirements will be met, or, if appropriate, exceptions granted. The program unit has the authority by Statute to impose requirements in addition to the requirements specified in the regulations. The program unit also retains by regulation the authority to grant specific exemptions from the requirements of the regulations. The MRCR specifies qualifications for the use of radioactive materials in or on humans that are similar to the NRC requirements in 10 CFR Part 35.

The Massachusetts licensing procedures manual, along with the accompanying regulatory guides, are adapted from similar NRC documents and contain adequate guidance for the agreement materials program unit staff to use when evaluating license applications.

(g) *Inspections and Enforcement.* The Massachusetts radiation control program has adopted a schedule providing for the inspection of licensees as frequently as, or more frequently than, the inspection schedule used by NRC. The agreement materials program unit has adopted procedures for the conduct of inspections, the reporting of inspection findings, and the report of inspection results to the licensees. The program has also adopted procedures for enforcement in the MRCR.

(h) *Regulatory Administration.* The Massachusetts Department of Public Health is bound by procedures specified in Commonwealth statute for rulemaking. The program has adopted procedures to assure fair and impartial treatment of license applicants.

(i) *Cooperation with Other Agencies.* The MRCR deems the holder of an NRC license on the effective date of the Agreement to possess a like license issued by Massachusetts. The MRCR provides that these former NRC licenses will expire either 90 days after receipt from the radiation control program of a notice of expiration of such license or on the date of expiration specified in the NRC license, whichever is earlier. The MRCR also provides for ''timely renewal.'' This provision affords the continuance of licenses for which an application for renewal has been filed more than 30 days prior to the date of expiration of the license. Licenses in timely renewal are not excluded from the transfer continuation provision. The MRCR provides exemptions from the Commonwealth's requirements for licensing of sources of radiation for NRC and U.S. Department of Energy contractors or subcontractors.

The Department of Public Health and the Department of Labor and Industries have entered into a Memorandum of Understanding, as authorized elsewhere in Massachusetts law, which provides for the Department of Public Health to exercise the responsibility and authority of the Department of Labor and Industries with respect to radiation and radioactive materials. The Department of Environmental Protection is designated as the agency to adopt the suitability standards for any proposed disposal site under the Massachusetts Low-Level Radioactive Waste Management Act. The Department of Public Health will license and regulate the site only after the Executive Secretary for Environmental Affairs has determined that the report on the site characterization study is in conformance with the suitability

standards, and the Low-Level Radioactive Waste Management Board has selected the operator.

The proposed Agreement commits the Commonwealth to use its best efforts to cooperate with the NRC and the other Agreement States in the formulation of standards and regulatory programs for the protection against hazards of radiation and to assure that the Commonwealth's program will continue to be compatible with the Commission's program for the regulation of like materials. The proposed Agreement stipulates the desirability of reciprocal recognition of licenses, and commits the Commission and the Commonwealth to use their best efforts to accord such reciprocity.

III. Staff Conclusion

Subsection 274d of the Act provides that the Commission shall enter into an agreement under subsection 274b with any State if:

(a) The Governor of the State certifies that the State has a program for the control of radiation hazards adequate to protect public health and safety with respect to the materials within the State covered by the proposed Agreement, and that the State desires to assume regulatory responsibility for such materials; and

(b) The Commission finds that the State program is in accordance with the requirements of Subsection 274o, and in all other respects compatible with the Commission's program for the regulation of such materials, and that the State program is adequate to protect public health and safety with respect to the materials covered by the proposed Agreement.

On the basis of its assessment, the NRC staff has concluded that the Commonwealth of Massachusetts meets the requirements of Section 274 of the Act. The Commonwealth's statutes, regulations, personnel, licensing, inspection, and administrative procedures are compatible with those of the Commission and adequate to protect public health and safety with respect to the materials covered by the proposed Agreement. Since the Commonwealth is not seeking authority over byproduct material as defined in Section 11e.(2) of the Act, Subsection 274o is not applicable to the proposed Agreement. The language of the Agreement requested by Governor Weld has been revised to reflect that the effective date of the proposed Agreement and the location at which it will be signed remain to be determined. Certain conventions have been used to highlight the proposed revisions. New language is shown inside boldfaced arrows, while language that would be deleted is set off with brackets.

IV. Small Business Regulatory Enforcement Fairness Act

In accordance with the Small Business Regulatory Enforcement Fairness Act of 1996, the NRC has determined that this action is not a major rule and has verified this determination with the Office of Information and Regulatory Affairs of the Office of Management and Budget (OMB).

Dated at Rockville, Maryland, this 19th day of December, 1996.

For the U. S. Nuclear Regulatory Commission.

Paul H. Lohaus,

Acting Director, Office of State Programs.

Appendix A—Proposed Agreement

Agreement Between the United States Nuclear Regulatory Commission and the Commonwealth of Massachusetts for the Discontinuance of Certain Commission Regulatory Authority and Responsibility Within the Commonwealth Pursuant to Section 274 of the Atomic Energy Act of 1954, as Amended

Whereas, The United States Nuclear Regulatory Commission (hereinafter referred to as the Commission) is authorized under Section 274 of the Atomic Energy Act of 1954, as amended (hereinafter referred to as the Act), to enter into agreements with the Governor of any State providing for discontinuance of the regulatory authority of the Commission within the State under Chapters 6, 7, and 8, and Section 161 of the Act with respect to by-product materials as defined in Sections 11e.(1) and (2) of the Act, source materials, and special nuclear materials in quantities not sufficient to form a critical mass; and,

Whereas, The Governor of the Commonwealth of Massachusetts is authorized under Massachusetts General Laws, Chapter 111H, to enter into this Agreement with the Commission; and,

Whereas, The Governor of the Commonwealth of Massachusetts certified on [June 1, 1995,] >March 28, 1996,< that the Commonwealth of Massachusetts (hereinafter referred to as the Commonwealth) has a program for the control of radiation hazards adequate to protect [the] public health and safety with respect to the materials within the Commonwealth covered by this Agreement, and that the Commonwealth desires to assume regulatory responsibility for such materials; and,

Whereas, The Commission found on [November 1, 1995,] >(date to be determined)< that the program of the Commonwealth for the regulation of the materials covered by this Agreement is compatible with the Commission's program for the regulation of such materials and is adequate to protect public health and safety; and,

Whereas, The Commonwealth and the Commission recognize the desirability and importance of cooperation[s] between the Commission and the Commonwealth in the formulation of standards for protection against hazards of radiation and in assuring that Commonwealth and Commission programs for protection against hazards of radiation will be coordinated and compatible; and,

Whereas, The Commission and the Commonwealth recognize the desirability of reciprocal recognition of licenses and exemptions from licensing of those materials subject to this Agreement; and,

Whereas, This Agreement is entered into pursuant to the provisions of the Atomic Energy Act of 1954, as amended;

Now, therefore, It is hereby agreed between the Commission and the Governor of the Commonwealth, acting in behalf of the Commonwealth, as follows:

Article I

Subject to the exceptions provided in Articles II, IV, and V, the Commission shall discontinue, as of the effective date of this Agreement, the regulatory authority of the Commission in the Commonwealth under Chapters 6, 7, and 8, and Section 161 of the Act with respect to the following materials:

A. By-product materials as defined in Section 11e.(1) of the Act;

B. Source materials;

C. Special nuclear materials in quantities not sufficient to form a critical mass; and,

D. Licensing of Low-Level Radioactive Waste Facilities.

Article II

This Agreement does not provide for discontinuance of any authority and the Commission shall retain authority and responsibility with respect to regulation of:

A. The construction and operation of any production or utilization facility;

B. The export from or import into the United States of by-product, source, or special nuclear material, or of any production or utilization facility;

C. The disposal into the ocean or sea of by-product, source, or special nuclear waste materials as defined in regulations or orders of the Commission;

D. The disposal of such other by-product, source, or special nuclear

material as the Commission from time to time determines by regulation or order should, because of the hazards or potential hazards thereof, not be so disposed of without a license from the Commission; and,

E. The extraction or concentration of source material from source material ore and the management and disposal of the resulting by-product material.

Article III

This Agreement may be amended, upon application by the Commonwealth and approval by the Commission, to include the additional area(s) specified in Article II, paragraph E, whereby the Commonwealth can exert regulatory control over the materials stated therein.

Article IV

Notwithstanding this Agreement, the Commission may from time to time by rule, regulation, or order, require that the manufacturer, processor, or producer of any equipment, device, commodity, or other product containing source, by-product, or special nuclear material shall not transfer possession or control of such product except pursuant to a license or an exemption from licensing issued by the Commission.

Article V

This Agreement shall not affect the authority of the Commission under Subsection 161b or 161i of the Act to issue rules, regulations, or orders to protect the common defense and security, to protect restricted data or to guard against the loss or diversion of special nuclear material.

Article VI

The Commission will use its best efforts to cooperate with the Commonwealth and other Agreement States in the formulation of standards and regulatory programs of the Commonwealth and the Commission for protection against hazards of radiation and to assure that Commonwealth and Commission programs for protection against hazards of radiation will be coordinated and compatible. The Commonwealth will use its best efforts to cooperate with the Commission and other Agreement States in the formulation of standards and regulatory programs of the Commonwealth and the Commission for protection against hazards of radiation and to assure that the Commonwealth's program will continue to be compatible with the program of the Commission for the regulation of like materials. The Commonwealth and the Commission will use their best efforts to keep each other informed of proposed changes in their respective rules and regulations and licensing, inspection and enforcement policies and criteria, and to obtain the comments and assistance of the other party thereon.

Article VII

The Commission and the Commonwealth agree that it is desirable to provide reciprocal recognition of licenses for the materials listed in Article I licensed by the other party or by any other Agreement State. Accordingly, the Commission and the State agree to use their best efforts to develop appropriate rules, regulations, and procedures by which such reciprocity will be accorded.

Article VIII

Commission, upon its own initiative after reasonable notice and opportunity for hearing to the Commonwealth, or upon request of the Governor of the Commonwealth, may terminate or suspend all or part of this Agreement and reassert the licensing and regulatory authority vested in it under the Act if the Commission finds that (1) such termination or suspension is required to protect public health and safety, or (2) the Commonwealth has not complied with one or more of the requirements of Section 274 of the Act. The Commission may also, pursuant to Section 274j of the Act, temporarily suspend all or part of this Agreement if, in the judgement of the Commission, an emergency situation exists requiring immediate action to protect public health and safety and the Commonwealth has failed to take necessary steps. The Commission shall periodically review this Agreement and actions taken by the Commonwealth under this Agreement to ensure compliance with Section 274 of the Act.

Article IX

This Agreement shall become effective on [April 24, 1996,] >(date to be determined)< and shall remain in effect unless and until such time as it is terminated pursuant to Article VIII.

Done at [Boston, Massachusetts] >(location to be determined)<, in triplicate, this [24]th Day of [April, 1996] >(date to be determined)<.

For the United States Nuclear Regulatory Commission

Shirley Ann Jackson,

Chairman.

For the Commonwealth of Massachusetts

William F. Weld,

Governor.

[FR Doc. 96–32756 Filed 12–24–96; 8:45 am]

BILLING CODE 7590–01–P

Policy and Procedure for Enforcement Actions; Policy Statement

AGENCY: Nuclear Regulatory Commission.

ACTION: Policy statement: corrections.

SUMMARY: This document presents corrections to the revision of the policy statement that was published December 10, 1996 (61 FR 65088). This action is necessary to correct the inadvertent failure to change two paragraphs of the Enforcement Policy concerning matters on which the NRC staff must notify the Commission. These additional changes are consistent with the other changes that were made in the revision as published.

EFFECTIVE DATE: The revision became effective on December 10, 1996.

FOR FURTHER INFORMATION CONTACT: James Lieberman, Director, Office of Enforcement, U.S. Nuclear Regulatory Commission, Washington, DC 20555 (301) 415–2741.

SUPPLEMENTARY INFORMATION: On December 10, 1996 (61 FR 65088), the NRC publised a revision to its ''General Statement of Policy and Procedure for NRC Enforcement Actions'' (Enforcement Policy or Policy) to address issues regarding consultation with the Commission and other subjects. Sections III of the Policy was revised to reflect the new list of circumstances in which the Commission would be consulted or notified. However, two paragraphs in Section VII, Exercise of Discretion, were not amended to reflect the changes adopted by the Commission. This document modifies those two paragraphs to reflect the appropriate policy as to notification to the Commission when the staff exercises discretion in enforcement matters. These two paragraphs were inadvertently omitted in the revision prepared for publication in the Federal Register.

Accordingly, the NRC Enforcement Policy is corrected by revising the first paragraphs in Sections VII.A.1. and VII.B. to read as follows:

General Statement of Policy and Procedure for NRC Enforcement Actions

* * * * *

VII. EXERCISE OF DISCRETION

* * * * *

A. Escalation of Enforcement Sanctions

* * * * *

1. Civil penalties. Notwithstanding the outcome of the normal civil penalty assessment process addressed in Section VI.B, the NRC may exercise discretion

by either proposing a civil penalty where application of the factors would otherwise result in zero penalty or by escalating the amount of the resulting civil penalty (i.e., base or twice the base civil penalty) to ensure that the proposed civil penalty reflects the significance of the circumstances and conveys the appropriate regulatory message to the licensee. The Commission will be notified if the deviation in the amount of the civil penalty proposed under this discretion from the amount of the civil penalty assessed under the normal process is more than two times the base civil penalty shown in Tables 1A and 1B. Examples when this discretion should be considered include, but are not limited to the following:

* * * * *

B. Mitigation of Enforcement Sanctions

The NRC may exercise discretion and refrain from issuing a civil penalty and/or a Notice of Violation, if the outcome of the normal process described in Section VI.B does not result in a sanction consistent with an appropriate regulatory message. In addition, even if the NRC exercises this discretion, when the licensee failed to make a required report to the NRC, a separate enforcement action will normally be issued for the licensee's failure to make a required report. The approval of the Director, Office of Enforcement, with consultation with the appropriate Deputy Executive Director as warranted, is required for exercising discretion of the type described in Section VII.B.1.b where a willful violation is involved, and of the types described in Sections VII.B.2 through VII.B.6. Commission notification is required for exercising discretion of the type described in: (1) Section VII.B.2 the first time discretion is exercised during that plant shutdown, and (2) Section VII.B.6 where appropriate based on the uniqueness or significance of the issue. Examples when discretion should be considered for departing from the normal approach in Section VI.B include but are not limited to the following:

* * * * *

Dated at Rockville, MD, this 18th day of December, 1996.

For the Nuclear Regulatory Commission.

John C. Hoyle.

Secretary of the Commission.

[FR Doc. 96–32755 Filed 12–24–96; 8:45 am]

BILLING CODE 7590–01–P

UNITED STATES POSTAL SERVICE

Board of Governors; Notice of a Sunshine Act Meeting

The Board of Governors of the United States Postal Service, pursuant to its Bylaws (39 CFR Section 7.5) and the Government in the Sunshine Act (5 U.S.C. Section 552b), hereby gives notice that it intends to hold a meeting at 1:00 p.m. on Monday, January 6, 1997, and at 8:30 a.m. on Tuesday, January 7, 1997, Washington, DC.

The January 6 meeting is closed to the public (see 61 FR 65092, December 10, 1996). The January 7 meeting is open to the public and will be held at U.S. Postal Service Headquarters, 475 L'Enfant Plaza, SW., in the Benjamin Franklin Room. The Board expects to discuss the matters stated in the agenda which is set forth below. Requests for information about the meeting should be addressed to the Secretary of the Board, Thomas J. Koerber, at (202) 268–4800.

Agenda

Monday Session

January 6–1:00 p.m. (Closed)

1. Consideration of a Proposed Filing with the Postal Rate Commission for Parcels. (John H. Ward, Vice President, Marketing Systems)
2. Consideration of Classroom Publication Rates. (John H. Ward, Vice President, Market Systems)
3. Consideration of Funding Approval for International Service Centers. (James F. Grubiak, Vice President, International Business; and John F. Kelly, Vice President, New York Metro Area Operations)

Tuesday Session

January 7–8:30 a.m. (Open)

1. Minutes of the Previous Meetings, December 2–3, 1996.
2. Remarks of the Postmaster General/Chief Executive Office. (Marvin Runyon)
3. Consideration of Board Resolution on Capital Funding. (Tirso del Junco, M.D., Chairman of the Board)
4. Consideration of Amendments to BOG Bylaws. (Chairman del Junco)
5. Annual Report on Government in the Sunshine Act Compliance. (Thomas J. Koerber, Secretary of the Board.
6. Postmaster General's FY 1996 Annual Report. (Larry M. Speakes, Senior Vice President, Corporate & Legislative Affairs)
7. Capital Investments.
   a. Golden, Colorado, Main Post Office/Delivery Distribution Center. (Rudolph K. Umscheid, Vice President, Facilities)
   b. Las Vegas, Nevada, Processing and Distribution Center. (Vice President Umscheid)
   c. Remote Computer Reader Enhanced Handwriting Recognition. (William J. Dowling, Vice President, Engineering)
8. Election of Chairman and Vice Chairman of the Board of Governors.
9. Tentative Agenda for the February 3–4, 1997, meeting in Albuquerque, New Mexico.

Thomas J. Koerber,

Secretary.

[FR Doc. 96–33015 Filed 12–23–96; 2:36 pm]

BILLING CODE 7710–12–M

RAILROAD RETIREMENT BOARD

Proposed Collection; Comment Request

SUMMARY: In accordance with the requirement of Section 3506(c)(2)(A) of the Paperwork Reduction Act of 1995 which provides opportunity for public comment on new or revised data collections, the Railroad Retirement Board (RRB) will publish periodic summaries of proposed data collections.

Comments are invited on: (a) Whether the proposed information collection is necessary for the proper performance of the functions of the agency, including whether the information has practical utility; (b) the accuracy of the RRB's estimate of the burden of the collection of the information; (c) ways to enhance the quality, utility, and clarity of the information to be collected; and (d) ways to minimize the burden related to the collection of information on respondents, including the use of automated collection techniques or other forms of information technology.

Title and purpose of information collection: Customer Satisfaction Surveys. In accordance with Executive Order 12862, the Railroad Retirement Board (RRB) conducts a number of customer surveys designed to determine the kinds and quality of services our beneficiaries, claimants, employers and members of the public want and expect, as well as their satisfaction with existing RRB services. The information collected is used by RRB management to determine where and to what extent services are satisfactory and where and to what extent services can be improved. The surveys are limited to data collections that solicit strictly voluntary opinions, and do not collect information which is required or regulated.

The RRB currently utilizes OMB public information collection 3220–0188 (RRB Customer Satisfaction Survey), to gather information used in monitoring customer satisfaction. The RRB proposes to replace this information collection by securing approval of a generic clearance for customer survey activities. The generic clearance will enhance the RRB's capability to submit new or revised customer survey instruments needed to timely implement customer monitoring

activities to OMB for review and approval.

The average burden per response for current customer satisfaction activities is estimated to range from 2 minutes for a web-site questionnaire to 2 hours for participation in a focus group. The RRB estimates 11,550 annual respondents totaling 1,043 hours of annual burden for the proposed generic customer survey clearance.

ADDITIONAL INFORMATION OR COMMENTS: To request more information or to obtain a copy of the information collection justification, forms, and/or supporting material, please call the RRB Clearance Officer at (312) 751–3363. Comments regarding the information collection should be addressed to Ronald J. Hodapp, Railroad Retirement Board, 844 N. Rush Street, Chicago, Illinois 60611–2092. Written Comments should be received within 60 days of this notice.

Chuck Mierzwa,

Clearance officer.

[FR Doc. 96–32746 Filed 12–24–96; 8:45 am]

BILLING CODE 7905–01–M

SECURITIES AND EXCHANGE COMMISSION

Submission for OMB Review; Comment Request

Proposed Amendments

Rule 2a–7, SEC File No. 270–258, OMB Control No. 3235–0268
Rule 34b–1, SEC File No. 270–305, OMB Control No. 3235–0346
Regulation C, SEC File No. 270–68, OMB Control No. 3235–0074
Form N–1A, SEC File No. 270–21, OMB Control No. 3235–0307
Form N–3, SEC File No. 270–281, OMB Control No. 3235–0316
Form N–4, SEC File No. 270–282, OMB Control No. 3235–0318

Upon Written Request, Copies Available From: Securities and Exchange Commission, Office of Filings and Information Services, Washington, D.C. 20549

Notice is hereby given that pursuant to the Paperwork Reduction Act of 1995 (44 U.S.C. 3501, *et seq.*), the Securities and Exchange Commission (''Commission'') has submitted to the Office of Management and Budget requests for approval of proposed amendments on previously approved collections of information:

Proposed Technical Amendments to Rule 2a–7

Rule 2a–7 [17 CFR 270.2a–7] under the Investment Company Act of 1940 (15 U.S.C. 80a–1, *et seq.*) (''1940 Act''), governs money market funds. The rule exempts money market funds from the valuation requirements of the 1940 Act, and, subject to certain risk-limiting conditions, permits money market funds to use the ''amortized cost method'' of asset valuation or the ''penny rounding method'' of share pricing. On March 21, 1996, the Commission adopted amendments to rule 2a–7 (Investment Company Act Rel. No. 21837 (Mar. 21, 1996)) (''March Amendments''). The proposed technical amendments to rule 2a–7 would clarify the application of the March Amendments, revise terminology used in the rule to reflect common market usage and codify a number of interpretive positions taken by the staff of the Division of Investment Management.

Rule 2a–7 imposes certain recordkeeping and reporting obligations upon money market funds.[1] Because the proposed technical amendments to rule 2a–7 would clarify existing recordkeeping obligations, it is estimated that the amendments would have no effect on the annual reporting burden of money market funds. It is estimated that approximately 1,345 money market funds are subject to the rule each year. It is further estimated that compliance with the rule's recordkeeping and reporting requirements imposes an average annual burden per money market fund of approximately 146 hours, so that the total annual burden for all money market funds would be 196,371 hours. These estimates of burden hours are made solely for purposes of the Paperwork Reduction Act, and are not derived from a comprehensive or even a representative survey or study.

Proposed Amendments to the Sales Literature and Advertising Rules Applicable to Money Market Funds

Proposed amendments to the sales literature and advertising rules applicable to money market funds (1) would clarify that income included in a money market fund's yield calculated in accordance with a uniform formula is limited to investment income, and (2) would require that total return used by money market funds in sales literature and advertisements must be accompanied by a quotation of current yield, computed in accordance with Commission rules, and set forth with equal prominence. It is estimated that the proposed amendments would not result in an increase in the total annual burden for all money market funds because the majority of money market funds include only investment income in calculating yield, and do not use total return based on short periods of time in sales literature and advertisements. The estimated burden hours appearing below are made solely for the purposes of the Paperwork Reduction Act and are not derived from a comprehensive or even representative survey or study of the cost of Commission rules and forms.

Rule 34b–1 under the 1940 Act governs sales material that accompanies or follows the delivery of a statutory prospectus (''sales literature''). It is estimated that there are approximately 287 respondents (including money market funds) that file approximately five responses annually pursuant to rule 34b–1. The burden from rule 34b–1 requires approximately 2.4 hours per response resulting from the collection of information.

Regulation C provides standard instructions to guide registrants filing registration statements under the Securities Act of 1933 (15 U.S.C. 77a, et seq.) (''1933 Act''). Regulation C is assigned one burden hour for administrative convenience because the rule simply prescribes the disclosure that must appear in other filings under the 1933 Act.

The 1940 Act requires investment companies to register with the Commission before they conduct any business in interstate commerce. The registration statement required under Section 8(b) of the 1940 Act must contain such information as the Commission has determined to be necessary or appropriate in the public interest or for the protection of investors. The various investment company registration forms state that if a money market fund wishes to

[1] Rule 2a–7 requires the board of directors of a money market fund, in supervising the fund's operations and delegating certain responsibilities to the fund's investment adviser, to establish written procedures designed to stabilize the fund's net asset value. These procedures typically address various aspects of the fund's operations. The fund must maintain and preserve for six years a written record of the board's considerations and actions taken in connection with the discharge of its responsibilities, to be included in the board's minutes. The fund must also maintain and preserve for three years written records of certain credit risk analyses, evaluations with respect to securities subject to certain types of liquidity enhancements and conditional and unconditional credit enhancements, and determinations with respect to adjustable rate securities and asset backed securities. If the board takes action with respect to defaulted securities, events of insolvency, or deviations in share price, the fund must file with the Commission an exhibit to Form N-SAR describing the nature and circumstances of such action. In the event of certain default or insolvency events, the fund must notify the Commission of the events and the actions the fund intends to take in response to the situation. As a matter of sound business practice, the board must develop and maintain certain additional procedures and records to ensure compliance with the risk-limiting conditions of rule 2a–7.

advertise its yield, it must calculate yield according to a standardized Commission formula set forth in the forms, and provide a quotation of yield in its registration statement.[2] The proposed amendments to Forms N–1A, N–3 and N–4 would conform the applicable items on each form to the proposed amendments to rule 34b–1 under the 1940 Act and rule 482 under the 1933 Act. The proposed amendments would not result in an increase in burden hours.

General comments regarding the estimated burden hours should be directed to the Desk Officer for the Securities and Exchange Commission at the address below. Any comments concerning the accuracy of the estimated average burden hours for compliance with Commission rules and forms should be directed to Michael E. Bartell, Associate Executive Director, Office of Information Technology, Securities and Exchange Commission, 450 Fifth Street, N.W., Washington, D.C. 20549 and Desk Officer for the Securities and Exchange Commission, Office of Information and Regulatory Affairs, Office of Management and Budget, Room 3208, New Executive Office Building, Washington, D.C. 20503.

Dated: December 18, 1996.

Margaret H. McFarland,

Deputy Secretary.

[FR Doc. 96–32718 Filed 12–24–96; 8:45 am]

BILLING CODE 8010–01–M

Submission for OMB Review; Comment Request

New

Form DF; SEC File No. 270–430, OMB Control No. 3235-mew

Upon Written Request, Copies Available From: Securities and Exchange Commission, Office of Filings and Information Services, Washington, DC 20549

Notice is hereby given that pursuant to the Paperwork Reduction Act of 1995 (44 U.S.C. 3501 et seq.), the Securities and Exchange Commission (''Commission'') has submitted to the Office of Management and Budget requests for approval of the addition of the following form:

Form DF—Notice of Delayed Filing Pursuant to Rule 13(d) of Regulation S–T. This form is to be filed in connection with a delayed electronic filing to preserve the timeliness of filing of reports or schedules filed pursuant to Sections 13(a), 13(d), 13(g), 15(d) and 16(a) of the Exchange Act, which, notwithstanding good faith efforts, are not filed in a timely manner because of technical difficulties beyond the electronic filer's control. The form will be available for public inspection. Issuers, corporate insiders and significant beneficial owners are the likely respondents.

The Commission's proposal to add Form DF would result in an estimated addition of 12 minutes of burden hour per submission, for a total burden of 100 hours, given an estimate of 500 responses per year.

General comments regarding the estimated burden hours should be directed to the Desk Officer for the Securities and Exchange Commission at the address below. Any comments concerning the accuracy of the estimated average burden hours for compliance with Commission rules and forms should be directed to Michael E. Bartell, Associate Executive Director, Office of Information Technology, Securities and Exchange Commission, 450 Fifth Street, N.W., Washington, D.C. 20549 and Desk Officer for the Securities and Exchange Commission, Office of Information and Regulatory Affairs, Office of Management Budget, Room 3208, New Executive Office Building, Washington, D.C. 20503.

Dated: December 21, 1996.

Margaret H. McFarland,

Deputy Secretary.

[FR Doc. 96–32722 Filed 12–24–96; 8:45 am]

BILLING CODE 8010–01–M

Issuer Delisting; Notice of Application To Withdraw From Listing and Registration; (Centennial Technologies, Inc., Common Stock, $.01 Par Value) File No. 1–12912

December 19, 1996.

Centennial Technologies, Inc. (''Company'') has filed an application with the Securities and Exchange Commission (''Commission''), pursuant to Section 12(d) of the Securities Exchange Act of 1934 (''Act'') and Rule 12d2–2(d) promulgated thereunder, to withdraw the above specified security (''Security'') from listing and registration on the American Stock Exchange, Inc. (''Amex'').

The reasons alleged in the application for withdrawing the Security from listing and registration include the following:

According to the Company, it has listed the Security with the New York Stock Exchange, Inc. (''NYSE''). In making the decision to withdraw the Security from listing on the Amex, the Company considered its anticipated listing on the NYSE, its continuing need to reduce its costs of doing business in the current competitive environment in which it operates, and the prohibitive cost of listing of the Security on both the Amex and the NYSE.

Any interested person may, on or before January 13, 1997, submit by letter to the Secretary of the Securities and Exchange Commission, 450 Fifth Street, N.W., Washington, D.C. 20549, facts bearing upon whether the application has been made in accordance with the rules of the exchange and what terms, if any, should be imposed by the Commission for the protection of investors. The Commission, based on the information submitted to it, will issue an order granting the application after the date mentioned above, unless the Commission determines to order a hearing on the matter.

For the Commission, by the Division of Market Regulation, pursuant to delegated authority.

Jonathan G. Katz,

Secretary.

[FR Doc. 96–32716 Filed 12–24–96; 8:45 am]

BILLING CODE 8010–01–M

[Rel. No. IC–22406; International Series Release No. 1038; 812–9582]

The Industrial Credit and Investment Corporation of India Limited

December 18, 1996.

AGENCY: Securities and Exchange Commission (''SEC'').

ACTION: Notice of Application for Exemption under the Investment Company Act of 1940 (the ''Act'').

APPLICANT: The Industrial Credit and Investment Corporation of India Limited (''ICICI'').

RELEVANT ACT SECTIONS: Order requested under section 6(c) of the Act that would exempt applicant from all provisions of the Act.

SUMMARY OF APPLICATION: Applicant, an industrial finance company, requests an order exempting it from all provisions of the Act in connection with the offer and sale of its securities in the United States.

FILING DATE: The application was filed on May 2, 1995, and amended on January 30, 1996, July 22, 1996, and on December 17, 1996.

HEARING OR NOTIFICATION OF HEARING: An order granting the application will be issued unless the SEC orders a hearing. Interested persons may request a

[2] See Item 22(a) of Form N–1A [17 CFR 239.15A and 274.11A]; Item 25(a) of Form N–3 [17 CFR 239.17a and 274.11b]; and Item 21(a) of Form N–4 [17 CFR 239.17b and 274.11c].

hearing by writing to the SEC's Secretary and serving applicant with a copy of the request, personally or by mail. Hearing requests should be received by the SEC by 5:30 p.m. on January 13, 1997 and should be accompanied by proof of service on applicant, in the form of an affidavit or, for lawyers, a certificate of service. Hearing requests should state the nature of the writers's interest, the reason for the request, and the issues contested. Persons may request notification of a hearing by writing to the SEC's Secretary.

ADDRESSES: Secretary, SEC, 450 5th Street N.W., Washington, D.C. 20549. Applicant, c/o Pierre de Saint Phalle, Davis Polk & Wardwell, 450 Lexington Avenue, New York, New York 10017.

FOR FURTHER INFORMATION CONTACT: Sarah A. Buescher, Staff Attorney, at (202) 942–0573, or Elizabeth G. Osterman, Assistant Director, at (202) 942–0564 (Division of Investment Management, Office of Investment Company Regulation).

SUPPLEMENTARY INFORMATION: The following is a summary of the application. The complete application may be obtained for a fee at the SEC's Public Reference Branch.

Applicant's Representations

1. Applicant, a limited liability company under the Indian Companies Act, 1913, was established in 1955 as a result of an initiative of the Government of India (the ''Government''), the International Bank for Reconstruction and Development, and representatives of Indian industry. Applicant states that it is one of India's largest publicly traded industrial finance companies and, together with two other finance institutions owned or controlled by the Government, is a key source of long-term financing of private sector industry in India.

2. Historically, ICICI has been owned by Government owned or controlled institutions. As of March 31, 1996, 50.04% of applicant's outstanding equity shares were owned by financial institutions owned partly or wholly by the Government. An additional 6.4% of applicant's outstanding equity shares were owned by Government companies, nationalized banks, and their mutual funds. One of applicant's 16 directors is nominated by the Government and another director is a representative of India's Ministry of Industry.

3. Applicant has been designated a Development Financial Institution (a ''DFI'') by the Securities and Exchange Board of India (the ''SEBI''). In its role as a DFI, applicant's financing objectives are largely influenced by Government policies. Applicant is also one of the largest of the All-India Financial Institutions in India, which are Public Financial Institutions that provide medium-term and long-term financial assistance to all sectors of the Indian economy for setting up new projects and for expansion and modernization of existing facilities. As a Public Financial Institution under the Indian Companies Act of 1956, applicant has the same status as other Government owned financial institutions and is entitled to various exemptions, including exemptions from certain provisions of the tax code and other laws.

4. Applicant typically provides assistance of medium-term duration to industrial companies to finance the cost of the establishment, modernization, or expansion of manufacturing and processing facilities. Applicant represents that the greatest use of the proceeds of its term loans is for the purchase of specified equipment and related services. As of March 31, 1996, approximately 80.1% of applicant's total loan portfolio (including leased assets) represented loans to finance the purchase price of specified machinery and equipment. Substantially all project loans are secured either by all assets of the borrower and/or by guarantees of commercial banks, state governments or the Government, and provide full recourse to the borrower. As security, applicant normally requires a borrower to create a mortgage over all its assets. Applicant does not normally make working capital loans. For the year ending March 31, 1996, 72.9% of applicant's total income from operations was from project loans (including debentures).

5. Applicant also offers financing assistance through underwriting or direct subscription of equity shares. This assistance is usually offered in conjunction with project finance loans. ICICI does not purchase any equity or preference shares in the secondary market. Applicant also provides financing assistance through deferred credits, leasing, installment sale, and asset credits. In addition, due to deregulation of the Indian economy, applicant recently has expanded into related financial activities such as custodian and debenture trusteeship activities, transfer agent services and investment advisory services (to be provided by separate subsidiaries), a merchant banking joint venture, a commercial bank subsidiary, and a trust company for sponsoring mutual funds.

6. Applicant provides project and equipment loans and other services to the Indian private sector, principally to industries such as textiles, chemicals, fertilizers, cement, metal, machinery, and transport equipment. ICICI restricts its credit exposure to specific industries by imposing a per-industry lending limitation of 15% of applicant's total asset portfolio. In addition, applicant's credit exposure to individual companies or business groups is kept below ceilings mandated by the Reserve Bank of India (the ''RBI'') for Public Financial Institutions (such as ICICI) and for commercial banks.

7. Generally, applicant does not bear any exchange rate risk with respect to its foreign currency loans because it typically shifts foreign exchange risk to its borrowers. All of applicant's loans and, with a few exceptions, all debentures, are held by applicant to maturity. Applicant does not purchase or sell loans or debentures in the secondary market.

8. The administration of ICICI is governed by the general provisions of the Indian Companies Act and other statutes applicable to public limited companies in India. Applicant is subject to extensive regulation by both the RBI and the SEBI. ICICI is regulated by the RBI as a non-bank financial institution and not as a banking institution or trust company. The RBI regulates ICICI's commercial lending, issuing certificates of deposit, issuing finance letters of credit, and engaging in foreign currency trading. In 1994, the RBI adopted capital adequacy guidelines for other types of financial institutions, which are adhered to by applicant. Capital adequacy guidelines are designed to protect the solvency of financial institutions by establishing limits on the amount of leverage they may incur. ICICI's accounting policies comply with guidelines established by the RBI. ICICI is also subject to specific practice guidelines established by the RBI relating to eligible clients, periodic reports, income recognition and asset allocation, and rates payable on certificates of deposit (generally discount instruments) and ''fixed'' deposits (generally interest bearing instruments).

9. The SEBI regulates applicant's underwriting, merchant banking, asset management, custodial, and debenture trusteeship activities. The SEBI prescribes conditions for the registration of these activities and establishes standards of obligations and responsibilities. SEBI regulations also establish requirements for underwriters and underwriting agreements, require the adoption of codes of ethics, and prohibit conflicts of interest and insider trading.

10. Applicant proposes to offer and sell equity and debt securities in the United States. Applicant will not offer or sell any such securities unless (a) they are registered under the Securities Act of 1933 (the ''Securities Act''), or (b) in the opinion of United States counsel for applicant there is an exemption from registration under the Securities Act available with respect to such offer and sale, or (c) the staff of the SEC states that they would not recommend that the SEC take any action under the Securities Act if the securities are not registered. In February 1996, applicant sold bonds in a Euro-offering in reliance on Regulation S under the Securities Act, including a private placement in reliance on rule 144A under the Securities Act.

11. Although applicant does not expect that the Government will guarantee payments on the notes that applicant proposes to sell in the United States, applicant states that investors would have the protection afforded by both the Indian regulation of ICICI's operations and the requirements of the Securities Act and the anti-fraud provisions of the Securities Exchange Act of 1934.

Applicant's Legal Analysis

1. Section 3(a)(3) of the Act defines an investment company to include any issuer engaged in the business of investing, reinvesting, owning, holding, or trading in securities, and that owns or proposes to acquire investment securities, having a value exceeding 40% of the issuer's total assets. As of March 31, 1996, 63.4% of applicant's assets consisted of obligations of industrial concerns pursuant to loans made to them by applicant. Such obligations could be deemed to be ''investment securities'' within the meaning of section 3(a)(3). As a result, applicant may be deemed to be an ''investment company'' under the Act. Applicant states that its financing activities currently fit within the literal language of sections (3(c)(5)(A) and (B) of the Act.[1] However, because ICICI's activities are expanding, it may not meet the requirements of section 3(c)(5) in the future. To prevent uncertainty as to its status under the Act, applicant requests an order pursuant to section 6(c) of the Act for an exemption from all provisions of the Act.

2. Section 6(c) of the Act provides that the SEC may exempt any person or transaction from any provision of the Act or any rule thereunder to the extent that such exemption is necessary or appropriate in the public interest and consistent with the protection of investors and the purposes fairly intended by the policy and provisions of the Act. Applicant requests an order under section 6(c) exempting it from all provisions of the Act.

3. Rule 3a-6 under the Act excludes foreign banks from the definition of investment company for all purposes under the Act. A ''foreign bank'' is defined to include a banking institution ''engaged substantially in commercial banking activity'' which, in turn, is defined to include ''extending commercial and other types of credit, and accepting demand and other types of deposits.'' Applicant believes that it is functionally equivalent to a foreign bank because it offers financial services and issues financial products similar to those offered and issued by traditional foreign banks, and it is subject to oversight, supervision, and regulation. Because applicant presently does not accept demand deposits, it may not be eligible for the exemption provided by rule 3a-6.

4. Applicant represents that RBI regulations governing its activities are similar to those governing commercial banks. The principal differences between RBI's regulation of non-bank financial institutions and banks are the non-banks' exemption from RBI regulations to minimum cash reserve ratios and statutory liquidity ratios and in the RBIs authority over the appointment of directors of bank boards only.

5. Applicant argues that, as a development financial institution designed to promote and provide a source of finance for industry in India, it is not within the intent of the Act and its characteristics different from the types of investment companies at which the Act was generally directed.

Applicant's Conditions

Applicant agrees that the order granting the requested relief will be subject to the following conditions:

1. In connection with any offering by the applicant of its securities in the United States, the applicant will appoint an agent to accept service of process in any suit, action or proceeding brought on the securities and instituted in any state or federal court in the City or State of New York by the holder of any such securities. The applicant will expressly submit to the jurisdiction of the New York State and United States Federal courts sitting in the City of New York with respect to any such suit, action or proceeding. Applicant will also waive the defense of an inconvenient forum to the maintenance of any such action or proceeding. Such appointment of an agent to accept service of process and such consent to jurisdiction shall be irrevocable until all amounts due and to become due in respect of debt securities have been paid and until any equity securities offered in the United States are no longer outstanding. No such submission to jurisdiction or appointment of agent for service of process will affect the right of a holder of any such security to bring suit in any court which shall have jurisdiction over the applicant by virture of the offer and sale of such securities or otherwise.

2. Applicant will rely on this order only so long as (a) its activities conform to the activities described in the application and (b) applicant continues to be regulated by the Government as a financial institution, as described in the application.

For the Commission, by the Division of Investment Management, pursuant to delegated authority.

Margaret H. McFarland,

Deputy Secretary.

[FR Doc. 96–32719 Filed 12–24–96; 8:45 am]

BILLING CODE 8010–01–M

[1] Sections 3(c)(5)(A) and (B) except from the definition of ''investment company'' any person who is not engaged in the business of issuing certain specified securities and who is primarily engaged in (A) ''purchasing or otherwise acquiring notes, drafts, acceptances, open accounts receivable, and other obligations representing part of all of the sales price of merchandise, insurance, and services'' and (B) ''making loans to manufacturers, wholesalers, and retailers of, and to prospective purchasers of, specified merchandise, insurance, and services.''

Issuer Delisting; Notice of Application To Withdraw From Listing and Registration; (Providence Energy Corporation, Common Stock, $1.00 Par Value) File No. 1–10032

December 19, 1996.

Providence Energy Corporation (''Company'') has filed an application with the Securities and Exchange Commission (''Commission''), pursuant to Section 12(d) of the Securities Exchange Act of 1934 (''Act'') and Rule 12d2–2(d) promulgated thereunder, to withdraw the above specified security (''Security'') from listing and registration on the American Stock Exchange, Inc. (''Amex'').

The reasons alleged in the application for withdrawing the Security from listing and registration include the following:

According to the Company, the Board of Directors of the Company adopted resolutions on October 17, 1996, to withdraw the Common Stock from listing on the Amex and, instead, to list such Common Stock on the New York Stock Exchange, Inc. (''NYSE'').

Any interested person may, on or before January 13, 1997, submit by letter to the Secretary of the Securities and Exchange Commission, 450 Fifth Street, N.W., Washington, D.C. 20549, facts hearing upon whether the application has been made in accordance with the rules of the exchanges and what terms, if any, should be imposed by the Commission for the protection of investors. The Commission, based on the information submitted to it, will issue an order granting the application after the date mentioned above, unless the Commission determines to order a hearing on the matter.

For the Commission, by the Division of Market Regulation, pursuant to delegated authority.

Jonathan G. Katz,

Secretary.

[FR Doc. 96–32715 Filed 12–24–96; 8:45 am]

BILLING CODE 8010–01–M

[Rel. No. IC–22407; 812–10258]

Van Kampen American Capital Equity Opportunity Trust, et al.

December 18, 1996.

AGENCY: Securities and Exchange Commission (''SEC'').

ACTION: Notice of Application for Exemption under the Investment Company Act of 1940 (the ''Act'').

APPLICANTS: Van Kampen American Capital Equity Opportunity Trust (the ''Trust''), on behalf of itself and its series, Stepstone Growth Equity and Treasury Securities Trust, Series 1, Stepstone Funds on behalf of itself and its portfolio, Stepstone Growth Equity Fund (the ''Equity Fund''), Van Kampen American Capital Distributions, Inc. (the ''Sponsor''), Pacific Alliance Capital Management (the ''Adviser''), and SEI Financial Services Company (the ''Distributor'').

RELEVANT ACT SECTIONS: Order requested under section 11(a) for an exemption from section 11(c).

SUMMARY OF APPLICATION: Applicants request an order to permit certain offers of exchange involving the Trust.

FILING DATE: The application was filed on July 22, 1996 and amended on November 22, 1996.

HEARING OR NOTIFICATION OF HEARING: An order granting the application will be issued unless the SEC orders a hearing. Interested persona may request a hearing by writing to the SEC's Secretary and serving applicants with a copy of the request, personally or by mail. Hearing requests should be received by the SEC by 5:30 p.m. on January 13, 1997 and should be accompanied by proof of service on the applicants, in the form of an affidavit or, for lawyers, a certificate of service. Hearing request should state the nature of the writer's interest, the reason for the request, and the issues contested. Persons may request notification of a hearing by writing to the SEC's Secretary.

ADDRESSES: Secretary, SEC, 450 5th Street, N.W., Washington, D.C. 20549. Applicants: The Sponsor and the Trust, One Parkview Plaza, Oak Brook Terrace, Illinois 60181; the Adviser, 475 Sansome Street, San Francisco, CA 94111; the Funds, 2 Oliver Street, Boston, MA 02109; and the Distributor, 680 East Swedesford Road, Wayne, PA 19087–1658.

FOR FURTHER INFORMATION CONTACT: Sarah A. Buescher, Staff Attorney, at (202) 942–0573, or Mercer E. Bullard, Branch Chief, at (202) 942–0564 (Division of Investment Management, Office of Investment Company Regulation).

SUPPLEMENTARY INFORMATION: The following is a summary of the application. The complete application may be obtained for a fee from the SEC's Public Reference Branch.

Applicants' Representations

1. The Trust is a unit investment trust registered under the Act that will consist of a series of unit investment trusts, each of which will be similar but separate and designated by a different series number (''Trust Series''). Each Trust Series will be created under the laws of one of the United States pursuant to a trust agreement which will contain information specific to that Trust Series and which will incorporate by reference the master trust indenture between the Sponsor and a financial institution that is a bank within the meaning of section 2(a)(5) of the Act and that satisfies the criteria in section 26(a) of the Act (the ''Trustee''), and an evaluator. The trust agreement and the master trust indenture are referred to collectively as the ''Trust Agreement.''

2. The Sponsor is a Delaware corporation and a wholly-owned subsidiary of Van Kampen American Capital, Inc. The Sponsor is a registered broker-dealer and a member of the National Association of Securities Dealers, Inc. The Sponsor currently acts as principal underwriter for the Van Kampen American Capital of Mutual Funds.

3. Stepstone Funds is an open-end management investment company registered under the Act. Stepstone Funds is not affiliated with the Sponsor or the Trust. The Equity Fund is one of fourteen portfolios offered by Stepstone Funds (collectively, the ''Funds''). Stepstone Funds has entered into an investment advisory agreement with the Adviser pursuant to which the Adviser acts an investment adviser for the Equity Fund and the other portfolios of Stepstone Funds.

4. Several of the Funds, including the Equity Fund, offer two classes of shares, the Institutional Class and the Investment Class. The Institutional Class is offered without a sales charge. The Investment Class is offered at net asset value plus a front-end sales load. Purchases of the Investment Class shares in the amount of $1 million or more are not subject to a front-end sales load, but redemptions of such amounts, purchased in reliance upon the waiver accorded to purchases of $1 million or more, within one year of purchase are subject to a contingent deferred sales load (''CDSL'').

5. Certain Funds, including the Equity Fund, have adopted a distribution plan with respect to their Investment Class shares pursuant to rule 12b–1 under the Act (''12b–1 Plan''). With respect to each portfolio's 12b–1 Plan, Stepstone Funds is authorize to pay the Distributor a fee at the annual rate of up to 0.40% of the respective portfolio's Investment Class shares average daily net assets, of which a maximum of .25% may be used to compensate broker-dealers and service providers that provide administrative and/or distribution services to Investment Class shareholders of their customers who beneficially own Investment Class shares. For the current year, the Distributor has agreed to waive any fees payable pursuant to the 12b–1 Plan for several of the Funds. The Distributor reserves the right, however, to terminate its waiver at any time at its sole discretion. The Distributor is a registered broker-dealer and acts as underwriter for the shares of the Funds.

6. Each Trust Series will have a portfolio consisting initially of shares of one of the Funds and zero coupon obligations. The Sponsor's obligation to purchase any such obligations from third parties in order to fulfill contracts to purchase such obligations held by a Trust Series will be backed by an irrevocable letter of credit. All zero coupon obligations in any one Trust Series will have essentially identical maturities.

7. The Trust Series are intended to be offered to the public initially at prices based on the net asset value of the shares of the Fund selected for deposit in that Trust Series, plus the offering side value of the zero coupon

obligations contained therein, plus a sales charge. Each Trust Series will redeem units representing undivided interests in that Trust Series (the ''Units'') at prices based on the aggregate bid side evaluation of the zero coupon obligations plus the net asset value of the Fund shares.

8. The Sponsor will deposit the zero coupon obligations in a Trust Series at a price determined by an evaluator.[1] The Trust Agreement will govern and the prospectus will fully disclose this procedure. The shares of the Funds will be deposited at their net asset value. Simultaneously with such deposit, the Trustee will deliver to the Sponsor registered certificates for Units which will represent the entire ownership of the Trust Series. These Units, in turn, will be offered for sale to the public by the Sponsor through the final prospectus following the declaration of effectiveness of the registration statement.

9. With the deposit of the securities in the Trust Series on the initial date of deposit, the Sponsor will have established a proportionate relationship between the principal amounts of zero coupon obligations and Fund shares in the Trust Series. The Sponsor will be permitted under the Trust Agreement to deposit additional securities, which may result in a potential corresponding increase in the number of Units outstanding. Such Units may be continuously offered for sale to the public by means of the prospectus. The Sponsor anticipates that any additional securities deposited in the Trust Series subsequent to the initial date of deposit in connection with the sale of these additional Units will maintain the proportionate relationship between the principal amounts of zero coupon obligations and Fund shares in the Trust Series.

10. Each Trust Series will be structured so that it will contain a sufficient amount of zero coupon obligations to assure that, at the specified maturity date for such Trust Series, the initial investors purchasing Units of the Trust Series on the first date they are offered for sale will receive back at least the total amount of their original investment in the Trust Series, including the sales charge. To the extent that the Fund pays dividends or makes capital gains distributions during the life of the Trust Series and to the extent that Fund shares have any value at the maturity of the Trust Series, the value of the purchaser's investment will have increased.

11. Each Trust Series will be able to acquire no more than 10% of the outstanding shares of any Fund.[2] Shares of only one of the Funds will be sold for deposit in any one Trust Series and the sales charge or CDSL, if any, on such shares will be waived so that such sales will be at net asset value.

12. Since the shares of the Funds have their net asset values calculated daily and this value will be readily available to the Sponsor, no evaluation fee will be charged with respect to determining the value of the Fund shares which comprise part of the value of the Units. The evaluator will charge an evaluation fee only with respect to that portion of the portfolio of a Trust Series which consists of zero coupon obligations.

13. The Sponsor and the Distributor will rebate to the Trustee any rule 12b–1 fees they receive on shares of the Funds held by the Trust Services. Any rule 12b–1 fees so rebated will be distributed along with other Fund income earned by the Trust. Any Fund related distributions, including amounts attributable to rebated rule 12b–1 fees, will reflect the deduction by the Trust of bona fide Trust expenses. If such Trust expenses exceed the amount of distributions from the Fund, excluding rebated 12b–1 fees, the deduction of Trust expenses will effectively reduce the amount of such rebate that is returned to unitholders.

14. The Sponsor does not intend to maintain a secondary market for the Units of the Initial Trust Series. Although not obligated to do so, the Sponsor may maintain a secondary market for Units of subsequent Trust Series. In the event the Sponsor does not maintain a secondary market, the Trust Agreement will provide that the Sponsor will not instruct the Trustee to sell zero coupon obligations from any Trust Series until shares of the Fund have been liquidated in order not to impair the protection provided by the zero coupon obligations, unless the Trustee is able to sell such zero coupon obligations and still maintain at least the original proportional relationship to Unit value and will further provide that zero coupon obligations may not be sold to meet Trust expenses. In addition, the Trustee may not redeem Fund shares except to the extent necessary to meet redemption of Units by unitholders, or to pay Trust expenses should distributions received on Fund shares and rebated 12b–1 fees prove insufficient to cover such expenses.

15. Unitholders may redeem their Units at prices based upon the net asset value of the Fund shares in the Trust Series plus the aggregate bid price of the zero coupon obligations. Unitholders tendering a minimum number of shares as disclosed in the prospectus will be able to request an in-kind distribution of portfolio securities in lieu of a cash distribution. The tendering unitholder will receive the *pro rata* number of Fund shares and the Fund proposes to offer these unitholders the option of reinvesting the *pro rata* portion of zero coupon obligations into Fund shares without a sales charge. Unitholders not electing to have their portion of the zero coupon obligations reinvested in Fund shares will receive cash equal to the *pro rata* portion of the zero coupon obligations to which the tendering unitholder is entitled.

16. Similarly, each Trust Series will provide unitholders still holding at termination the minimum number of Units set forth in the prospectus the option to receive an in-kind distribution of their *pro rata* number of Fund shares. The Fund also will offer all such unitholders the option of reinvesting their *pro rata* portion of zero coupon obligations in Fund shares at net asset value. Proceeds from the zero coupon obligations will be paid in cash unless the unitholder elects reinvestment. The reinvestment options upon redemption of Units and at termination of the Trust Series are collectively referred to herein as the ''Reinvestment Options.'' Shares acquired under the Reinvestment Options will be subject to any applicable rule 12b–1 fees as are all other shares held directly by investors.

Applicants' Legal Analysis

1. Section 11(a) of the Act makes it unlawful for any registered open-end investment company or principal underwriter for such company to make or cause to be made certain offers of exchange on any basis other than the relative net asset values of the securities to be exchanged, unless the terms of the exchange offer have first been approved by the SEC. Section 11(c) provides that section 11(a) will be applicable to any type of exchange offer involving securities of a registered unit investment trust, irrespective of the basis for the exchange. Applicants state that the intent of section 11 is to protect

[1] The Sponsor expects to be deposit substantially more than $100,000 aggregate value of zero coupon obligations and Fund shares in each Trust Series.

[2] Applicants state that they are not requesting relief from section 12(d)(1) of the Act because section 12(d)(1)(E) of the Act provides that section 12(d)(1) shall not apply to securities purchased by a registered unit investment trust if the securities are the only ''investment securities'' held by the trust. Applicants believe that U.S. Treasury zero coupon obligations are not ''investment securities'' for purposes of section 12(d)(1)(E) and that the Fund shares are the only ''investment securities'' which a Trust Series will hold. *See* Equity Securities Trust (pub. avail. Jan. 19, 1994).

investors from switching their investment in securities of one investment company to another investment company and the consequent erosion of their equity.[3]

2. Applicants request relief on behalf of (a) certain existing and subsequent Trust Series, (b) existing and future portfolios of the Stepstone Funds other than money market or no-load funds (*i.e.* funds that do not impose a sales load, a deferred sales load, or bear distribution expenses pursuant to a rule 12b–1 plan), and (c) open-end management investment companies, including portfolios and series thereof, that may in the future be advised by the Adviser, other than money market or no-load funds.[4]

3. Applicants note that the Reinvestment Options provide unitholders the option of either (a) in-kind distribution of their proportionate number of Fund shares or (b) receiving a cash distribution. Such unitholders also will have the option of (a) reinvesting the proceeds of the zero coupon obligations in Fund shares at net asset value (without the imposition of a CDSL or a sales load) or (b) receiving a cash distribution.

4. Applicants believe that the Reinvestment Options give the unitholders flexibility of choice. Applicants further believe that the Reinvestment Options do not raise the concerns that section 11 was designed to address because, although Fund shares have a front-end sales load or a CDSL, none will be charged to the unitholders in the proposed Reinvestment Options. Applicants note that there will be no additional cost, other than the rule 12b–1 fee, to unitholders who choose to invest in Fund shares upon redemption of Units or upon termination of the Trust.[5]

Applicants' Conditions

Applicants agree to the following as conditions to granting the requested order:

1. No sales charge, CDSL, if any, or redemption fee will be imposed on any shares of the Fund deposited in any Series of the Trust or on any Fund shares acquired by unitholders through the Reinvestment Options.

2. The prospectus of each Trust Series and any sales literature or advertising that mentions the existence of the Reinvestment Options will disclose that shareholders who elect to invest in Fund shares will incur a rule 12b–1 fee.

3. The Sponsor and the Distributor will immediately rebate to the Trustee any rule 12b–1 fees it receives on shares of the Funds acquired by the Trust Series.

For the SEC, by the Division of Investment Management, under delegated authority.

Margaret H. McFarland,

Deputy Secretary.

[FR Doc. 96–32720 Filed 12–24–96; 8:45 am]

BILLING CODE 8010–01–M

[3] Applicants state that they are not requesting relief from sections 14(a) and 19(b) of the Act and rule 19b–1 thereunder because the Trust has received an exemption from such provisions in a prior application. *See* Van Kampen Merritt Equity Opportunity Trust, Investment Company Act Release Nos. 20597 (Oct. 4, 1994) (notice) and 20672 (Nov. 1, 1994) (order).

[4] Applicants state in a letter that all existing Trust Series or portfolios of the Stepstone Funds that currently intend to rely on the requested order are named in the application.

[5] Applicants note that, if Unitholders choose instead to take a cash distribution upon termination of the Trust or upon redemption of Units and later decide to invest in Fund shares, they would have to pay a front-end sales load or would be subject to the imposition of any applicable CDSL.

[Release No. 34–38053; File No. SR–MSRB–96–06]

Self-Regulatory Organizations; Municipal Securities Rulemaking Board; Order Granting Approval to Proposed Rule Change and Notice of Filing of, and Order Granting Accelerated Approval to, Amendment No. 1 to the Proposed Rule Change Relating to MSRB Telemarketing Rules

December 16, 1996.

I. Introduction

On July 30, 1996, the Municipal Securities Rulemaking Board (''Board'' or ''MSRB'') submitted to the Securities and Exchange Commission (''SEC'' or ''Commission''), pursuant to Section 19(b)(1) of the Securities Exchange Act of 1934 (''Act'')[1] and Rule 19b–4 thereunder,[2] a proposed rule change to amend MSRB telemarketing rules[3] the proposed rule change was published for comment in the Federal Register on September 7, 1996.[4] No comments were received on the proposal.[5]

II. Background

Under the Telemarketing and Consumer Fraud and Abuse Prevention Act (''Telemarketing Act''), which became law in August 1994,[6] the Federal Trade Commission adopted detailed regulations (''FTC Rules'')[7] to prohibit deceptive and abusive telemarketing acts and practices that became effective on December 31, 1995.[8] The FTC Rules, among other things, (i) require the maintenance of ''do-not-call'' lists and procedures, (ii) prohibit certain abusive, annoying, or harassing telemarketing calls, (iii) prohibit telemarketing calls before 8 a.m. or after 9 p.m., (iv) require a telemarketer to identify himself or herself, the company he or she works for, and the purpose of the call, and (v) require express written authorization or other verifiable authorization from the customer before the firm may use instruments called ''demand drafts.''[9]

Under the Telemarketing Act, the SEC is required either to promugage or to require the SROs to promulgate rules substantially similar to the FTC Rules, unless the SEC determines either that the rules are not necessary or appropriate for the protection of investors or the maintenance of fair and orderly markets, or that existing federal securities laws or SEC rules already provide for such protection.

The MSRB believes it has implemented the prohibition against certain abusive, annoying, or harassing telemarketing calls contained in the FTC Rules by issuing an interpretation that such conduct is violative of existing rules.[10] The MSRB believes that the proposed rule change addresses all

[1] 15 U.S.C. § 78s(b)(1).

[2] 17 CFR 240.19b–4.

[3] On Nov. 4, 1996, the MSRB filed Amendment No. 1 to its proposal. Letter from Ronald W. Smith, Legal Associate, Municipal Securities Rulemaking Board (''MSRB''), to George A. Villasana, Attorney, Division of Market Regulation, SEC, dated Nov. 1, 1996.

[4] *See* Securities Exchange Act Release No. 37626 (Aug. 30, 1996), 61 FR 47224 (Sept. 6, 1996) (notice of File No. SR–MSRB–96–06).

[5] The Commission, however, received two comment letters on an NASD proposal, which is substantially similar. *See* Letter from Brad N. Bernstein, Assistant Vice President & Senior Attorney, Merrill Lynch, to Jonathan G. Katz, Secretary, SEC, dated Aug. 19, 1996 (''Merrill Lynch Letter''), and Letter from Frances M. Stadler, Associate Counsel, Investment Company Institute (''ICI''), to Jonathan G. Katx, Secretary, SEC, dated Aug. 21, 1996 (''ICI better'').

For a discussion of the letters and responses thereto, see Securities Exchange Act Release No. 38009 (Dec. 2, 1996) (approving File No. SR–NASD–96–28). In response to these letters, the MSRB filed Amendment No. 1 to its proposal. *See* Amendment No. 1, *supra* note 3.

[6] 15 U.S.C. §§ 6101–08.

[7] 16 CFR 310.

[8] §§ 310.3–4 of FTC Rules.

[9] *Id.* Pursuant to the Telemarketing Act, the FTC Rules do not apply to brokers, dealers, and other securities industry professionals. Section 3(d)(2)(A) of the Telemarketing Act.

A ''demand draft'' is used to obtain funds from a customer's bank account without that person's signature on a negotiable instrument. The customer provides a potential payee with bank account identification information that permits the payee to create a piece of paper that will be processed like a check, including the words ''signature on file'' or ''signature pre-approved'' in the location where the customer's signature normally appears.

[10] The Board implemented the requirement in (ii) referenced above by issuing an interpretation that abusive telemarketing calls are inconsistent with past and equitable principles of trade. *See* MSRB Reports, Vol. 16, No. 3 (Sept. 1996).

other relevant elements of the FTC Rules not covered by existing federal securities laws and regulations.

III. Description of the Proposals

Time Limitations and Disclosure

The proposed rule change adds rule G–39 to prohibit, under proposed paragraph (a) to rule G–39, a broker, dealer or municipal securities dealer or a person associated with a broker, dealer or municipal securities dealer from making outbound telephone calls to the residence of any person for the purpose of soliciting the purchase of municipal securities or retailed services at any time other than between 8 a.m. and 9 p.m. local time at the called person's location, without the prior consent of the person, and to require, under proposed paragraph (b) to rule G–39, such broker, dealer or municipal securities dealer or a person associated with a broker, dealer or municipal securities dealer to promptly disclose to the called person in a clear and conspicuous manner the caller's identity and firm, the telephone number or address at which the caller may be contacted, and that the purpose of the call is to solicit the purchase of municipal securities or related services.

Paragraph (c) to proposed rule G–39 creates exemptions from the time-of-day and disclosure requirements of paragraphs (a) and (b) for telephone calls by associated persons responsible for maintaining and servicing accounts of certain ''existing customers'' assigned to or under the control of the associated persons. Paragraph (c) defines ''existing customer'' as a customer for whom the broker, dealer or municipal securities dealer, or a clearing broker or dealer on behalf of such broker, dealer or municipal securities dealers, carries an account. Proposed subparagraph (c)(i) exempts such calls, by an associated person, to an existing customer who, within the preceding twelve months, has effected a securities transaction in, or made a deposit of funds or securities into, an account under the control of or assigned to such associated person at the time of the transaction or deposit. Proposed subparagraph (c)(ii) exempts such calls, by an associated person, to an existing customer who, at any time, has effected a securities transaction in, or made a deposit of funds or securities into an account under the control of or assigned to the associated person at the time of the transaction or deposit, as long as the customer's account has earned interest or divided income during the preceding twelve months. Each of these exemptions also permits calls by other associated persons acting at the direction of an associated person who is assigned to or controlling the account. Proposed subparagraph (c)(iii) exempts telephone calls to a broker, dealer or municipal securities dealer. The proposed rule change also expressly clarifies that the scope of this rule is limited to the telemarketing calls described herein; the terms of the rule do not otherwise expressly or by implication impose on brokers, dealers or municipal securities dealers any additional requirements with respect to the relationship between a dealer and a customer or between a person associated with a dealer and a customer.[11]

Do Not Call List

The proposed rule change amends rule G–8, on books and records, so that each broker, dealer and municipal securities dealer that engages in telephone solicitation to market its products and services is required to make and maintain a centralized do-not-call list of persons who do not wish to receive telephone solicitations from a broker, dealer or municipal securities dealer or a person associated with a broker, dealer or municipal securities dealer.[12]

Demand Draft Authorization and Recordkeeping

The proposed rule change also amends rule G–8, on books and records, to prohibit a broker, dealer or municipal securities dealer or municipal securities dealer or person associated with a broker, dealer or municipal securities dealer from obtaining from a customer or submitting for payment a check, draft, or other form of negotiable paper drawn on a customer's checking, savings, share, or similar account (''demand draft'') without that person's express written authorization, which may include the customer's signature on the instrument. The proposed change to rule G–9, on preservation of records, requires the retention of such authorization for a period of three years. The proposal also states that this provision shall not, however, require maintenance of copies of negotiable instruments signed by customers.[13]

Telemarketing Scripts

The proposed rule change amends rule G–21 to include ''electronic'' messages sent via computer and ''telemarketing scripts'' within the definition of ''advertisement.'' The inclusion of the term ''electronic'' within the definition of ''advertisement'' is intended to apply to communication available to all network subscribers including items displayed over network bulletin boards, and it is intended to apply to messages sent directly to individuals or targeted groups. Therefore, the associated record retention requirement for ''advertisements'' contained in the proposed change to rule G–9(b)(xiii), on record retention, will require dealers to retain telemarketing scripts for three years.

IV Discussion

The Commission finds that the proposed rule change is consistent with the requirements of the Act and the rules and regulations thereunder applicable to the Board, and, in particular, with Section 15B(b)(c)(C) of the Act[14] which requires, among other things, that the rules of the Board be designed to prevent fraudulent and manipulative acts and practices, to promote just and equitable principles of trade, and, in general, to protect investors and the public interest.[15] The proposed rule change is consistent with these objectives in that it imposes time restriction and disclosure requirements, with certain exceptions, on members' telemarketing calls, requires verifiable authorization from a customer for demand drafts, requires the maintenance of a do-not-call list, requires the retention for three years of all substantially different telemarketing scripts, and prevents members from engaging in certain deceptive and abusive telemarketing acts and practices while allowing for legitimate telemarketing practices. The Commission believes that the addition of rule G–39, prohibiting a broker, dealer or person associated with a broker, dealer or municipal securities dealer from making outbound telephone calls to the residence of any person for the purpose of soliciting the purchase of municipal securities or related services at any time other than between 8 a.m. and 9 p.m. local time at the called person's location, without the prior consent of the person, is appropriate.

[11] *See* Amendment No. 1, *Supra* note 3.

[12] The NYSE, the NASD, the CBOE, the Amex, and the PSE also adopted similar rules. *See* Securities Exchange Act Release Nos. 35821 (June 7, 1995), 60 FR 31337 (approving File No. SR–NYSE–95–11); 35831 (June 9, 1995) 60 FR 56624 (approving File No. SR–CBOE–95–63); 36748 (Jan. 19, 1996), 61 FR 2556 (approving File No. SR–AMEX–96–01); and 37897 (Oct. 30, 1996), 61 FR 57937 (approving File No. SR–PSE–96–32).

[13] *See* Amendment No. 1, *supra* note 3.

[14] 15 U.S.C. § 78o–4.

[15] In approving these rules, the Commission has considered the proposed rules' impact on efficiency, competition, and capital formation. 15 U.S.C. § 78c(f).

The Commission notes that, by restricting the times during which a broker, dealer or municipal securities dealer or person associated with a broker, dealer or municipal securities dealer may call a residence, the Rules furthers the interest of the public and provides for the protection of investors by preventing brokers, dealers and municipal securities dealers from engaging in unacceptable practices, such as persistently calling members of the public at unreasonable hours of the day and night.

The Commission also believes that the addition of rule G–39, requiring a broker, dealer or municipal securities dealer or person associated with a broker, dealer or municipal securities dealer to promptly disclose to the called person in a clear and conspicuous manner the caller's identity and firm, telephone number or address at which the caller may be contacted, and that the purpose of the call is to solicit the purchase of municipal securities or related services, is appropriate. By requiring the caller to identify himself or herself and the purpose of the call, the rule assists in the prevention of fraudulent and manipulative acts and practices by providing investors with information necessary to make an informed decision when purchasing municipal securities. Moreover, by requiring the associated person to identify the firm for which he or she works and the telephone number or address at which the caller may be contacted, the rule encourages responsible use of the telephone to market municipal securities.

The Commission also believes that rule G–39, creating exemptions from the time-of-day and disclosure requirements for telephone calls by associated persons, or other associated persons acting at the direction of such persons, to certain categories of ''existing customers'' is appropriate. The Commission believes it is appropriate to create an exemption for calls to customers with whom there are existing relationships in order to accommodate personal and timely contact with a broker, dealer or municipal securities dealer who can be presumed to know when it is convenient for a customer to respond to telephone calls. Moreover, such an exemption also may be necessary to accommodate trading with customers in multiple time zones across the United States. The Commission, however, believes that the exemption from the time-of-day and disclosure requirements should be limited to calls to persons with whom the broker, dealer or municipal securities dealer has a minimally active relationship. In this regard, the Commission believes that rule G–39 achieves an appropriate balance between providing protection for the public and the municipal brokers' and dealers' interest in competing for customers.

The Commission also believes that the amendment to rule G–8, requiring that a broker, dealer or municipal securities dealer or person associated with a broker, dealer or municipal securities dealer obtain from a customer, and maintain for three years, express written authorization when submitting for payment a check, draft, or other form of negotiable paper drawn on a customer's checking, savings, share or similar account, is appropriate. The Commission notes that by requiring a broker, dealer and municipal securities dealer or person associated with a broker, dealer or municipal securities dealer to obtain express written authorization from a customer in the above-mentioned circumstances assists in the prevention of fraudulent and manipulative acts in that it reduces the opportunity for a broker, dealer or municipal securities dealer or person associated with a broker, dealer or municipal securities dealer to misappropriate customers' funds. Moreover, the Commission believes that by requiring brokers, dealers and municipal securities dealers or persons associated with a broker, dealer or municipal securities dealer to retain the authorization for three years, rule G–8 protects investors and the public interest in that it provides interested parties with the ability to acquire information necessary to ensure that valid authorization was obtained for the transfer of a customer's funds for the purchase of a municipal security.

The Commission also believes that the amendment to rule G–8, requiring that each broker, dealer and municipal securities dealer maintain a centralized do-not-call list of persons who do not wish to receive telephone solicitations from the broker, dealer or municipal securities dealer or its associated persons, is appropriate. By requiring brokers, dealers and municipal securities dealers to maintain a do-not-call list, rule G–8 assists in the prevention of fraudulent and manipulative acts and practices, such as persistently calling investors who have expressed a desire not to receive telephone solicitations.

The Commission also believes that the amendments to rules G–9 and G–21, requiring every broker, dealer and municipal securities dealer to retain for three years from the date of each use each advertisement published or designed for distribution to the public, including, among other things, electronic media and telemarketing scripts, is appropriate. By requiring brokers, dealers and municipal securities dealers to retain advertisements for three years, rules G–9 and G–21 assist in the prevention of fraudulent and manipulative acts and practices and provide for the protection of the public in that they provide interested parties with the ability to acquire copies of the advertisements used to solicit the purchase of municipal securities to ensure that brokers, dealers and municipal securities dealers and associated persons are not engaged in unacceptable telemarketing practices.

Finally, the Commission believes that the proposed rule achieves a reasonable balance between the Commission's interest in preventing members from engaging in deceptive and abusive telemarketing acts and the members' interest in conducting legitimate telemarketing practices.

The Commission finds good cause for approving Amendment No. 1 prior to the thirtieth day after the date of publication of notice thereof in the Federal Register. Amendment No. 1 simply clarifies portions of the proposed Rule and does not raise any significant regulatory concerns. Therefore, the Commission believes that granting accelerated approval to Amendment No. 1 is appropriate and consistent with Section 15B and Section 19(b)(2) of the Act.

Interested persons are invited to submit written data, views and arguments concerning Amendment No. 1. Persons making written submissions should file six copies thereof with the Secretary, Securities and Exchange Commission, 450 Fifth, N.W., Washington, DC 20549. Copies of the submission, all subsequent amendments, all written statements with respect to the proposed rule change that are filed with the Commission, and all written communications relating to the proposed rule change between the Commission and any person, other than those that may be withheld from the public in accordance with the provisions of 5 U.S.C. 552, will be available for inspection and copying in the Commission's Public Reference Room. Copies of such filing will also be available for inspection and copying at the principal office of the MSRB. all submissions should refer to File No. SR–MSRB–96–06 and should be submitted by January 15, 1997.

V. Conclusion

It is Therefore ordered, pursuant to Section 19(b)(2) of the Act, [16] that the proposed rule change (SR–MSRB–96–06), as amended, is approved.

For the Commission, by the Division of Market Regulation, pursuant to delegated authority.[17]

Margaret H. McFarland,

Deputy Secretary.

[FR Doc. 96–32721 Filed 12–24–96; 8:45 am]

BILLING CODE 8010–01–M

[16] 15 U.S.C. § 78s(b)(2).

[17] 17 CFR 200.30–3(a)(12)(1994).

[Release No. 34–38060; File NO. SR–NASD–96–47]

Self-Regulatory Organizations; Notice of Filing of Proposed Rule Change by NASD Regulation, Inc. Relating to the Policy and Practice Concerning the Application of the Eligibility Provision in Rule 10304 of the NASD Code of Arbitration Procedure

December 18, 1996.

Pursuant to Section 19(b)(1) of the Securities Exchange Act of 1934 (''Act''), 15 U.S.C. 78s(b)(1), notice is hereby given that on December 17, 1996, NASD Regulation, Inc. (''NASD Regulation'') filed with the Securities and Exchange Commission (''Commission'') the proposed rule change as described in Items I, II, and III below, which Items have been prepared by NASD Regulation. The Commission is publishing this notice to solicit comments on the proposed rule change from interested persons.[1]

I. Self-Regulatory Organization's Statement of the Terms of Substance of the Proposed Rule Change

NASD Regulation amended its policy and practice concerning the application of the eligibility provision in Rule 10304 of the Code of Arbitration Procedure (''Code'') of the National Association of Securities Dealers, Inc. (''NASD'' or ''Association'') to the effect that arbitrators, not the NASD Regulation staff, shall determine whether a dispute is eligible for arbitration. Below is the test of the policy and practice change.

Pursuant to Rule 10304 of the Code, ''[n]o dispute, claim or controversy shall be eligible for submission to arbitration under this code where six (6) year as have elapsed from the occurrence or event giving rise to the act or dispute, claim or controversy.'' Effective August 1, 1996,[2] the NASD Regulation staff will no longer make preliminary determinations concerning the eligibility of a claim for arbitration. The NASD Regulation staff instead will address questions concerning the eligibility of a claim according to the following procedures:

1. Upon the filing or receipt of a claim, the staff reviews the claim to determine if the claimant has identified when the transaction at issue occurred or when the claim arose. If not identified, the Statement of Claim is retained but the claimant is asked for additional information about the age of the claim.

2. If a claim identifies when the transaction at issue occurred or when the claim arose, it is served on the respondents. It is then the respondent's determination whether to challenge the eligibility of the claim.

3. Any motions to dismiss the claim on eligibility grounds and any responses thereto are forwarded to the arbitrators for a decision.

4. For those cases filed prior to August 1, 1996 where the staff has made a preliminary eligibility ruling in response to a respondent's motion, the moving papers will be forwarded to the arbitrators with a remainder that the arbitrators must review the issue *de novo* and must not accord the staff's preliminary ruling any weight.

II. Self-Regulatory Organization's Statement of the Purpose of, and Statutory Basis for, the Proposed Rule Change

In its filing with the Commission, NASD Regulation included statements concerning the purpose of and basis for the proposed rule change and discussed any comments it received on the proposed rule change. The text of these statements may be examined at the places specified in Item IV below. NASD Regulation has prepared summaries, set forth in Sections A, B, and C below, of the most significant aspects of such statements.

A. Self-Regulatory Organization's Statement of the Purpose of, and Statutory Basis for, the Proposed Rule Change

1. Purpose

NASD Regulation is soliciting comment on its amended policy and practice concerning the application of the eligibility provision in Rule 10304 of the Code to the effect that arbitrators, not the NASD Regulation staff, shall determine whether a dispute is eligible for arbitration under Rule 10304.[3]

Until recently, the NASD Regulation staff made preliminary eligibility determinations, both before and after a claim had been served, in cases where a bright line test could be applied. Before a claim was served the staff would, upon examination of the allegations in the Statement of Claim, determine if the occurrence or event giving rise to the act or dispute, claim or controversy took place more than six (6) years prior to the filing of the Statement of Claim. If the staff determined that this was the case, it would advise the claimant that the claim was ineligible for arbitration. Once a claim had been served and the staff had previously made a preliminary eligibility determination upon the motion of a party, upon the request of a party the arbitrators could review the preliminary staff determination and accept or reject it. The other self-regulatory organization (''SRO'') arbitration forums have also followed this practice.

NASD Regulation has determined that because the practice of having the staff make preliminary eligibility determinations is not expressly provided for in the Code, questions may arise concerning the legal effect of these determinations. Accordingly, NASD Regulation amended the existing policy and practice to eliminate staff eligibility determinations.

The amended policy, which is consistent with the Code and plain language of Rule 10304, will require the staff, upon the filing or receipt of a claim, to review the claim to determine if the claimant has identified when the transaction at issue occurred or when the claim arose. If not identified, the Statement of Claim is retained but the claimant is asked for additional information about the age of the claim. By requiring that claims identify when the transaction at issue occurred or arose, NASD Regulation is facilitating the ability of the arbitrators to determine if the claim is eligible.

[1] NASD Regulation originally submitted this proposed rule change in SR–NASD–96–37 on October 15, 1996. That rule filing was submitted for immediate effectiveness under Section 19(b)(3)(A) of the Act. SR–NASD–96–37 was withdrawn simultaneously with the filing of this rule change.

[2] NASD Regulation has been enforcing the amended policy and practice described in SR–NASD–96–37, and in this filing, since August 1, 1996, up to and during the filing of notice in SR–NASD–96–37, and is continuing to enforce the policy at this time.

[3] This policy is intended to be temporary. NASD Regulation intends the policy to remain in effect until an amendment to Rule 10304 can be developed and approved. The NASD's Arbitration Policy Task Force Report on Securities Arbitration Reform recommended suspending the eligibility rule. NASD Regulation, in consultation with the Securities Industry Conference on Arbitration (SICA) and others, is considering other alternatives to suspending the eligibility rule. The policy will not be included in the NASD Manual because NASD Regulation intends to propose a new arbitration eligibility rule within a few months.

If a claim identifies when the transaction at issue occurred or when the claim arose, or is amended to provide such information, it is served on the respondents. Once the claim is served, the respondents can decide whether or not the challenge the eligibility of the claim. If a respondent submits a motion to dismiss on eligibility grounds, the claimants will have an opportunity to respond, and the motion and the responses will be forwarded to the arbitrators for a decision.

NASD Regulation has also determined that where a case was filed prior to August 1, 1996, and the staff has made a preliminary eligibility ruling in response to a respondent's motion, the moving papers will be forwarded to the arbitrators with a reminder that the arbitrators must review the issue de novo and must not accord the staff's preliminary ruling any weight.

NASD Regulation notes, as described above, that eligibility determinations have always involved an element of staff discretion. Thus, adoption of the policy set forth above is not a substantive change in Rule 10304 or its interpretation; it is a change in the manner in which the staff exercises its discretion to administer the arbitration process under the Rule.

2. Statutory Basis

NASD Regulation believes that the proposed rule change is consistent with the provisions of Section 15A(b) (6) of the Act[4] in that amending the policy for applying the eligibility provision of the Code serves the public interest by enhancing the perception of fairness of such proceedings by the parties to such proceedings. Unless otherwise expressly provided for in the Code, dispositive motions should be decided by the arbitrators because the arbitrators are the designated adjudicators of all issues of fact, law and procedure in an arbitration. To the extent the parties to such proceedings express increased satisfaction with the resolution of eligibility issues, the goal of providing the investing public with a fair, efficient and cost-effective forum for the resolution of disputes will have been advanced.

B. Self-Regulatory Organization's Statement on Burden on Competition

Regulation does not believe that the proposed rule change will result in any burden on competition that is not necessary or appropriate in furtherance of the purposes of the Act.

[4] 15 U.S.C. 780–3(b)(6).

C. Self-Regulatory Organization's Statement on Comments on the Proposed Rule Change Received from Members, Participants or Others

NASD Regulation proposed rule change SR–NASD–96–37 was filed for immediate effectiveness pursuant to Section 19(b)(3)(A) of the Act on October 15, 1996. The Commission published notice of the filing of SR–NASD–96–37 in the Federal Register[5] and received thirteen comment letters in response.[6] Filing SR–NASD–96–37 is being withdrawn simultaneously with the submission of this rule filing, which is substantively the same as SR–NASD–96–37.

Because there is insufficient time to adequately address the comment letters received in response to SR–NASD–96–37 at this time, NASD Regulation will respond to them when addressing the comment letters received in response to this filing.

III. Date of Effectiveness of the Proposed Rule Change and Timing for Commission Action

Within 35 days of the publication of this notice in the Federal Register or within such longer period (i) as the Commission may designate up to 90 days of such date if it finds such longer period to be appropriate and publishes its reasons for so finding or (ii) as to which the self-regulatory organization consents, the Commission will:

(A) by order approve the proposed rule change, or

(B) institute proceedings to determine whether the proposed rule change should be disapproved.

IV. Solicitation of Comments

Interested persons are invited to submit written data, views, and arguments concerning the foregoing. Persons making written submissions should file six copies thereof with the Secretary, Securities and Exchange Commission, 450 Fifth Street, N.W., Washington, D.C. 20549. Copies of the submission, all subsequent amendments, all written statements with respect to the proposed rule change that are filed with the Commission, and all written communications relating to the proposed rule change between the Commission and any person, other than those that may be withheld from the public in accordance with the provisions of 5 U.S.C. 552, will be available for inspection and copying in the Commission's Public Reference Room. Copies of such filing will also be available for inspection and copying at the principal office of the NASD. All submissions should refer to File No. SR–NASD–96–47 and should be submitted by January 16, 1997.

[5] Securities Exchange Act Release No. 37875 (October 28, 1996), 61 FR 56594 (November 1, 1996).

[6] Comment letters were received from A.G. Edwards & Sons, Inc.; Scot D. Bernstein, Esq.; Gail E. Boliver, Esq.; Michael R. Casey, Esq.; Dean Witter, Discover & Co.; Philip J. Hoblin, Jr., Esq.; Investor Advocates; C. Thomas Mason, III; Merrill Lynch; Public Investors Arbitration Bar Association; Harold W. Sellner; Smith Barney; and the Securities Industry Association.

For the Commission, by the Division of Market Regulation, pursuant to delegated authority.[7]

Margaret H. McFarland,

Deputy Secretary.

[FR Doc. 96–32772 Filed 12–24–96; 8:45 am]

BILLING CODE 8010–01–M

[Release No. 34–38058; File No. SR–NYSE–96–36]

Self-Regulatory Organizations; Notice of Filing of Proposed Rule Change by the New York Stock Exchange, Inc. Relating to Transmission of Proxy and Other Shareholder Communication Material.

December 18, 1996.

Pursuant to Section 19(b)(1) of the Securities Exchange Act of 1934 (''Act''), 15 U.S.C. § 78s(b)(1), notice is hereby given that on December 6, 1996, the New York Stock Exchange, Inc. (''NYSE'' or ''Exchange'') filed with the Securities and Exchange Commission (''Commission'') the proposed rule change as described in Items, I, II, and III below, which Items have been prepared by the self-regulatory organization. The Commission is publishing this notice to solicit comments on the proposed rule change from interested persons.

I. Self-Regulatory Organization's Statement of the Terms of Substance of the Proposed Rule Change

The Exchange is proposing changes to Rules 451 and 465 (the ''Rules'') on a three-year pilot basis. The Rules establish guidelines for the reimbursement of expenses by issuers to NYSE member organizations for the processing of proxy materials and other issuer communications with respect to security holders whose securities are held in street name. The text of the proposed rule change is available at the Exchange or the Commission.

[7] 17 CFR 200.30–3(a)(12).

II. Self-Regulatory Organization's Statement of the Purpose of, and Statutory Basis for, the Proposed Rule Change

In its filing with the Commission, the self-regulatory organization included statements concerning the purpose of and basis for the proposed rule change and discussed any comments it received on the proposed rule change. The text of these statements may be examined at the places specified in Items IV below. The self-regulatory organization has prepared summaries, set forth in Sections A, B, and C below, of the most significant aspects of such statements.

A. Self-Regulatory Organization's Statement of the Purpose of, and Statutory Basis for, the Proposed Rule Change

1. Purpose

Background to the Proposed Rule Change

Exchange member organization holding securities in street name solicit proxies and deliver communications to and from beneficial owners of securities on behalf of issuers.[1] For this service, issuers reimburse the member organizations for all out-of-pocket expenses, reasonable clerical expenses, postage and other expenses incurred in a particular circulation. The Rules set guidelines for the amount of the reimbursement.

While member organizations initially handled proxy processing internally, beginning in the late 1960's and continuing to the present, firms have increasingly used outside contractors for these types of services. In particular, a firm will contract with a service bureau, such as Automatic Data Processing (''ADP''), for the solicitation of proxy voting instructions, and the distribution of reports to shareholders.[2] However, the identity of the soliciting broker remains on all communications.

Since the level of reimbursement was last reviewed in 1986, the Exchange has found that proxy solicitation and report distribution costs have increased, due in large part to general cost increases in the economy. Postage itself has doubled since 1979. Brokers pass these costs to the issuers. Aggregate costs also have increased due to a substantial increase in the number of beneficial owners, which results from increased participation of individual investors in the rising securities market.

While the number of individual investors has increased, the percentage of holdings of securities through institutional investors, mutual funds, pension and savings plans also has increased. Such institutions have an obligation, or, in some cases, a statutory duty, to vote the shares being held. Institutions have developed a variety of mechanisms to vote their shares in conformity with their own internal policies and governing regulations. While these procedures require time, many institutional investors have difficulty voting on a timely basis during the spring proxy season. Over 40 percent of all annual meetings occur within a few weeks. Some large institutions tend to vote very close to the meeting date, particularly during the proxy season, due to the immense increase in paperwork.

The Exchange has determined that, in addition to the changing stock ownership patterns, stock holdings continue to migrate from registered to street or nominee ownership. Street name holdings are concentrated with approximately 1,000 nominees, and the Exchange believes that an efficient infrastructure is necessary to coordinate these nominees and their customers. Service bureaus, as contract agents of the nominees, build and maintain such systems. Nominees and their agents also have developed communications systems for obtaining shareholder votes electronically rather than through a physical proxy. To accommodate this, the Exchange recently amended its rules to permit telephone voting. However, the Exchange has found that the current fee structure does not recognize the value that these systems provide to issuers in reducing the costs of coordination and solicitation.

Despite the progress that has been made in the distribution and proxy solicitation process, issuers often express their belief that mailing fees are unnecessarily high and that the procedures are not responsive to the needs of the issuers. In this regard, unit fees for large issuers are the same as those for small issuers, ignoring economies of scale. Two matters are of particular concern to issuers: whether they will have a quorum at their meeting and whether large blocks of votes will be received relatively close to the meeting date. In many cases, addressing these concerns has led to significantly increased solicitation costs for issuers. At the same time, the interests of institutions in having their voted counted in the tabulation must also be recognized, and any changes must preserve the rights of all shareholders in the corporate suffrage process.

Limitations of the Current Fee Structure

While there have been changes in the nature of securities holdings and enhancements in technology, the proxy fee structure generally has been unchanged since the Rules were first adopted in 1938. In the Exchange's view, the current structure does not provide incentives for nominees and other intermediaries to use the most current and efficient technology. The Exchange believes that this structure needs to be reconsidered and that there should be incentives for market-driven innovations, such a electronic proxy services, touch-tone voting, and electronic vote reporting.

Funding to operate these communication and voting systems presently comes from the unit mailing fees that issuers pay under the NYSE reimbursement guidelines. A decrease in fees could reduce the use of these systems, which are increasingly being relied upon in the voting process. Without financial incentives, it is unlikely that new cost-reducing technology will be implemented. In addition, there is no incentive for brokers and intermediaries to reduce the mailing of printed material. Paper, printing and postage generally represent between 80 and 90 percent of the cost of the average proxy mailing. By the development and use of new technologies and electronic distribution, these costs can be reduced.

Finally, the Rules also do not recognize the cost of coordinating multiple nominees and the value that consolidating material distribution and vote collection provides to issuers. These services, which are not expressly required by any regulation, include: (i) sending a single search card for multiple nominees; (ii) coordinating multiple nominees to generate a single material request for each issuer; (iii) delivering material to a single place for multiple nominees; (iv) sorting bulk mail across multiple nominees for maximum discounts; (v) daily reporting of votes for multiple broker and bank nominees; and (vi) consolidating multiple nominees into a single invoice.

The Exchange's Proposal

The proposed rule change would amend the Rules to reduce the suggested rate of reimbursement from 60¢ or 70¢ to 55¢ for each set of proxy material, *i.e.*, proxy statement, form of proxy and

[1] Street ownership encompasses shares purchased through a broker or bank (referred to as a nominee). The shares are then registered in the name of that nominee, or in the nominee name of a depository such as The Depository Trust Company (''DTC''). Recent analysis indicates that, on average, approximately 70 to 80 percent of all outstanding shares are held in street name.

[2] The Commission notes that ADP is currently the only intermediary offering these services to broker-dealers.

annual report, when mailed as a unit. The present distinction between proposals that require beneficial instructions and those that do not would be eliminated. According to the Exchange, this will produce substantial savings for all issuers. Further, the rate for mailing other reports, primarily quarterly reports, would be reduced from 20¢ to 15¢. The rate of reminder notices would remain at 40¢ unless a proxy fight is involved. The special fee of 60¢ for mailing only to shareholders who have not voted would be eliminated. These are the first reduction in the basic rates since the Rules were adopted in 1938.

The proposal treats reimbursement for mailings during proxy fights differently. These contests require significant efforts by all participants in the proxy process and can occur under difficult circumstances. The time for distribution is short and requires maximum effort. Thus, the proposal includes a new fee of $1 for each set of proxy materials mailed.

A significant aspect of the proposed rule change is a new $20 fee per nominee. To earn this fee, the intermediary will need to provide coordination for a series of functions across a multitude of nominees (brokers, banks).[3] In effect, this fee compensates an intermediary for all the services it provides and upon which issuers and institutions have come to rely, such as:[4]

- Searches: Rule 14a-13 under the Act requires an issuer to inquire of each record holder to determine the number of beneficial owners holding shares through nominees. If an intermediary coordinates multiple nominees, the issuer incurs only the expense of performing one ''search'' for all the nominees, saving the issuer significant expenses.
- Search responses: Nominees must respond to an issuer's search request within seven business days of receipt. This process often is complicated since there are multiple levels of entities. In that case, an intermediary can consolidate responses (in some cases, responses of over 1,000 entities), this saving administrative expenses for issuers and increasing the accuracy of ordering material.
- Delivering materials: Providing material to hundreds of nominees requires an issuer to sort and ship a parcel to each nominee. If this task is not done by the issuer, it must be done by a proxy solicitor or some other vendor. Since an issuer pays a fee and a freight bill for each of these shipments, and intermediary can save issuers a significant expense if it can make one material delivery for hundreds of nominees.
- Use of bulk mail: For issuers who use bulk mail, a significant amount of the savings realized today would not occur unless intermediaries continue to combine nominees. Issuers reimburse nominees for postage, and bulk postage rates are available only for large shipments. Unless consolidated, the majority of nominees would not be able to qualify individual small shipments for bulk discounts.
- Preliminary voting information: To help issuers judge whether they have a quorum, many brokers currently report a discretionary vote ten or fifteen days before a meeting in accordance with NYSE Rule 451(b)(1), and again at the time of the meeting. As the proxy process has evolved, large intermediaries voluntarily have provided daily voting updates for issuers. ADP now sends daily consolidated vote reports 15 or 10 days before a meeting, and then every business day until the night before the meeting. Without this service, many issuers would need to hire a proxy solicitor to obtain voting estimates. Obtaining the vote from a single source for hundreds of nominees can save the issuer substantial expense, and daily voting updates provide comfort to the issuer as the meeting date approaches.

The Exchange has determined that this coordination fee is consistent with current Exchange rules that authorize the payment of a coordination fee for agents that coordinate providing information regarding non-objecting beneficial owners (''NOBOs''). [5] The impact of the nominee fee will vary with the issuer and the nature of its shareholders. However, the Exchange has observed that smaller issuers tend to have fewer nominee holders. The Exchange estimates that the smallest 4,000 U.S. issuers would pay, on average, an intermediary nominee coordination fee of only $800. This will be partially offset by the lower basic rate and lower expense.

To clarify the policy with respect to out-of-pocket expenses, the proposed rule provides for reimbursement only of actual costs, such as: outgoing postage (plus third class sorting fee); envelopes and business reply envelopes; and custom printing of envelopes and ballots. The business reply postage would be billed at the Business Reply Mailing Accounting System (BRMAS) rate. Additional savings are possible by sorting mail to obtain postal discounts, as well as through other efforts undertaken by nominees or their agents to reduce issuers' postage expenses. These savings could be shared between the issuer and the processor.

The Exchange also is prosing a new incentive fee to compensate member organizations for eliminating the need to send materials in paper form. This will encourage member organizations to apply technology to sort materials in a way that multiple proxy instruction forms are included in a single envelope, with a single set of materials to be mailed to the same household. The Rules address this area through the concept of ''householding.'' A member firm or intermediary could earn this paper elimination fee by distributing multiple proxy instruction forms electronically or be distributing all material to a household electronically. An additional fee of 50¢ (10¢ for a quarter report) is proposed for each set of material that is not mailed.

The Exchange provides the following examples of the cost savings that are possible by eliminating mailings:

1. A person having three accounts—such as an individual account, an ''IRA'' retirement account, and a trust account—could receive one set of materials through ''householding.'' The cost comparison is:

	Unit cost	Without householding	Householding (3 accounts)
Proxy Fee	$.55	$1.65	$1.65
Householding Fee	.50	0	1.00
Annual Report & Proxy Statement (Estimated, cost will vary):	2.00	6.00	2.00
Bulk Rate	.65	1.95	.65

[3] ''Nominees'' are those names that appear on either the list of record shareholders or on an omnibus proxy sent to the issuer on the record date by a depository, but who are, in fact, acting for someone else. In practice, they are self-clearing brokers, banks, or other financial institutions participating in DTC or some other depository.

[4] As noted above, ADP is the only intermediary that currently offers these services to broker-dealers.

[5] *See* Exchange Rule 451.92

	Unit cost	Without householding	Householding (3 accounts)
Outgoing Postage			
Envelopes	.08	.24	.08
Return Postage	.34	1.02	.34
Total	.....	$10.86	$5.72

As this example makes clear, the potential savings are greatest in the areas of postage and printing, and these savings will occur even in the first year. Also note that this example assumes the use of bulk rate mailings. The savings would be greater for issuers using first class postage.

2. Savings from elimination of mailings also are possible through use of the Internet. Even for an individual with only one account, the savings can be shown as follows:

	Unit cost	Mail return	Electronic return
Proxy Fee	$.55	$.55	$.55
Householding Fee	.50	0	.50
Annual Report & Proxy Statement	2.00	2.00	0
(Estimated, cost will vary):			
Outgoing Postage	.65	.65	0
Envelopes	.08	.08	0
Return Postage	.34	.34	0
Total	.....	$3.62	$1.05

In this example, the Internet cost is paid by the user. Investors who request to receive information electronically simply would receive an ''e-mail'' message indicating that the annual report and proxy are available. The Exchange believes that such use of the Internet would be consistent with Commission policies in this area.[6]

Finally, as to the manner in which the fees are collected, the Exchange notes that ADP is the data processor for many of the brokerage firms that are Exchange members. These firms subcontract the data processing functions of the proxy solicitation process to ADP, but retain all the obligations to comply with the relevant Exchange rules. As a general matter, the firms subcontract for these services at less than the full fee that the issuer pays. The firms also maintain some staff in a proxy department to handle such tasks as balancing depository positions on record date, changing investor records, answering inquiries and performing other work not covered by the subcontract.

The firm's systems department also needs to maintain proxy-related programs—including programs for separating wrap accounts—and the communications equipment to interface electronically with an intermediary on both search date and record date. In addition, the compliance department of the firm is required to ensure that the firm fully complies with Exchange and Commission rules since subcontracting does not relieve a firm of its legal responsibilities.

To simplify the administrative difficulties that would result if each issuer had to pay many brokers, ADP has developed a ''single invoice'' procedure for all of the brokers with whom they have subcontracted. Under this procedure, ADP bills issuers on behalf of literally hundreds of brokers and banks. ADP remits to their clients the amounts specified in their contracts, which the firms will retain to cover their own costs.

The Exchange believes that this billing procedure does not affect issuer costs. In this regard, if the brokers billed issuers directly, the issuers would pay the same amount, but to several brokers, rather than to a central data processor. In the Exchange's view, there is no economic difference in the brokerage firms retaining part of the costs paid by the issuers or such firms receiving the same amount paid by ADP through the single invoice system. This billing process also is consistent with other types of outsourcing transactions. Indeed, issuers benefit from this procedure since they are able to pay a single processor, rather than multiple brokerage firms.

2. Statutory Basis

The basis under the Act for the proposed rule change is the requirement under Section 6(b)(5) that an exchange have rules that are designed to prevent fraudulent and manipulative acts and practices, to promote just and equitable principles of trade, to foster cooperation and coordination with persons engaged in regulating, clearing, settling, processing information with respect to, and facilitating transactions in securities, to remove impediments to and perfect the mechanism of a free and open market and a national market system, and, in general, to protect investors and the public interest.

B. Self-Regulatory Organization's Statement on Burden on Competition

The Exchange does not believe that the proposed rule change will impose any inappropriate burden on competition.

C. Self-Regulatory Organization's Statement on Comments on the Proposed Rule Change Received From Members, Participants, or Others

Summary of the Comment Letters

The Exchange solicited comments on the proposed rule change from listed companies, member firms and other industry organizations involved in the proxy solicitation process pursuant to a Request for Comment dated September 18, 1996. The Exchange received 261 comments letters.[7] While it is difficult to categorize some of the letters, the

[6] *See* Securities Act Release No. 7233 (Oct. 6, 1995).

[7] The Exchange informally circulated a draft of the Request for Comment on July 19, 1996. That draft was substantially similar to the final proposal, and a number of commentators responded only to the July 19th request for comments. Thus, the 261 letters include those letters received in response to the July draft.

Exchange has concluded that 181 letters generally supported the proposal and 80 letters opposed the proposal. Of the 181 letters supporting the proposal, 52 letters also expressed reservations about certain aspects of the proposal.

Those letters supporting the proposal believed that it would lead to cost reductions, increased technological efficiencies and consolidation of services. These commentators saw the savings from the fee reductions more than compensating for the cost of the new nominee fee. Even some companies facing increased fees in the short term supported the proposal, believing that they would reap long-term gains through decreases in internal printing costs and increased efficiencies in the years ahead. Some commentators also thought that the proposal could result in an increased voting response in the proxy process.

In addition, supporters believed that the new fee structure would more equitably distribute the costs of the proxy process among market participants. To the extent that these commentators had reservations regarding the proposal, they noted that any difficulties could be addressed following the end of the three-year pilot period.

Commentators objecting to the proposal focused primarily on the new nominee fee. The main objection to that fee was that it would result in increased costs, especially to smaller issuers. There are suggestions that the Exchange (i) abandon the nominee fee, (i) adopt tiered nominee fees, with small issuers not being subject to the full $20 fee, and (iii) restructure the nominee fee so that it would be progressive, based on how many shareholder accounts an issuer has.

Some commentators asked for a more precise definition of ''nominee.'' Others expressed the general view that brokers should be responsible for the costs of communicating with street name holders (and some recommended that the Exchange not establish guidelines at all in this area). Some commentators also objected to the proposed incentive fees. These commentators argued that the proposed fee was unrelated to any additional service provided by an intermediary, and that the intermediaries should be expected to provide for additional efficiencies without the need for further reimbursement.

As to the letters with mixed opinions, some commentators said they needed more time to review the proposal. Others found it difficult to estimate the proposed savings or thought that any possible savings would be minimal. A number of commentators supported the overall thrust of the proposals, but questioned certain aspects of it, such as suggesting that it was counterproductive to authorize the nominee fee while lowering fees generally. Some commentators supported the proposal, but urged that the Exchange lower fees even further. Finally, a number of commentators made specific suggestions on how to structure the review of the pilot program.

The Exchange's Response to the Comment Letters

Well over half the comment letters expressed support for the proposals. The Exchange believes that this indicates that the proposal accurately balances the interests of the issuers, broker-dealers, intermediaries and investors. In particular, many commentors noted that the proposal would provide a more rational fee structure and would encourage the use of enhanced technology to facilitate the shareholder communication and voting process. As discussed, even a number of issuers whose proxy solicitation costs would increase supported the proposal, noting that the new fee structure likely would yield long-term savings.

Those commentators who voiced opposition to the proposed rule change focused almost entirely on the possibility of increased costs, especially through the nominee fee. Many of these commentators argued that the fee was unfair and that it covered services that already were being provided. Some of these commentators believed that the proposed nominee fee would benefit large issuers at the expense of smaller issuers.

In response, the Exchange first notes that this fee is cost-related and is intended to compensate intermediaries for the services they provide. As discussed above, intermediaries conduct searches for determining how many sets of material to mail, coordinate mailings (often through the use of bulk mail) and help provide preliminary voting information. The proposed rule change attempts to establish a more accurate fee schedule by isolating these services and establishing a separate fee for recovering the costs of providing these services. By charging separately for these discreet services, the Exchange is able to lower the general fees for mailing materials.

The Exchange also believes that the commentators who objected to the nominee fee do not fully recognize the cost savings that will result under the new fee schedule. These commentators simply added the total fees that they would have to reimburse intermediaries under the fee schedule, but failed to consider the other cost savings, particularly ''out of pocket savings,'' that the Exchange believes they are likely to achieve. In addition, for example, the new incentive fees are likely to result in fewer mailings, thus decreasing printing and mailing costs. Similarly, the fee structure encourages the use of new technology, especially with respect to voting, and thus should result in a more efficient proxy system.

As to the other objections that commentators raised, the Exchange notes:

- Definition of nominee: The Exchange believes that the term ''nominee'' is well-known in the securities industry and will not give rise to interpretive issues. The Exchange's request for comment made clear that a ''nominee'' is a name appearing on a list of record holders who, in fact, is acting for someone else. They are ''participants'' of the Depository Trust Company, such as self-clearing banks, brokers and other financial institutions.
- Need for reimbursement guidelines: The Exchange has provided fee reimbursement guidelines since 1938 to provide a service to its constituents and to help ensure that investors receive proxy and other information from issuers on a timely basis. The system has worked well over the years, and the current process of reviewing the fees indicates that the Exchange continues to play a critical role in facilitating (i) the flow of information from issuers to shareholders and (ii) the flow of votes from shareholders to issuers.
- Incentive fees: A number of commentators questioned the adoption of incentive fees as a means to reduce mailings. These commentators believed that intermediaries already should be taking steps to reduce costs. However, the Exchange states that the current fee structure provides little incentive for intermediaries to limit the number of mailings to shareholders. This results in increases in both mailing costs and, more significantly, printing costs, for issuers. The incentive fee could have a dramatic effect in encouraging intermediaries to eliminate multiple mailings.
- Non-U.S. issuers: Non-U.S. issuers are exempt from most of the Commission's proxy rules pursuant to Rule 3a12–3 under the Act. Nevertheless, non-U.S. issuers generally do provide U.S. shareholders with proxy and related information and seek the vote of their U.S. holders. Thus, broker-dealers and other intermediaries face the same reimbursement issues with non-U.S. companies as they do with U.S. companies. The Exchange has not been presented with any compelling

reasons to treat these classes of issuers differently.

Finally, the Exchange recognizes that it is impossible to establish a final fee structure without actual market experience. Thus, the Exchange is proposing the new fee structure for a three-year pilot term. An industry Committee consisting of representatives of the Exchange and all the major constituency groups affected by the new fee structure will monitor the effect of the new fees throughout the pilot. The Committee will be able to propose changes as needed and will make final recommendations to the Exchange at the conclusion of the pilot period.

III. Date of Effectiveness of the Proposed Rule Change and Timing for Commission Action

Within 35 days of the publication of this notice in the Federal Register or within such longer period (i) as the Commission may designate up to 90 days of such date if it finds such longer period to be appropriate and publishes its reasons for so finding or (ii) as to which the self-regulatory organization consents, the Commission will:

(A) by order approve the proposed rule change, or

(B) institute proceedings to determine whether the proposed rule change should be disapproved.

IV. Solicitation of Comments

Interested persons as invited to submit written data, views, and arguments concerning the foregoing. Commenters are invited specifically to provide information that will assist the Commission in assessing whether each of the various elements of the proposed fee structure—the mailing reimbursement fees for non-contested and contested solicitations, respectively, the nominee fee, and the ''householding'' incentive fee—considered separately and/or as a whole, are consistent with: (1) issuers' obligation under Rule 14a–13(a)(5) of the Act to reimburse broker-dealers, banks, and other nominees for the ''reasonable expenses'' they incur in mailing proxy soliciting materials and annual reports to beneficial holders of such issuers' voting securities and/or (2) broker-dealers' ability under Rule 14b–1(c)(2) of the Act not to deliver proxy soliciting materials and annual reports pursuant to Rule 14b–1(b)(2) of the Act, or provide NOBO information under Rule 14b–1(b)(3) of the Act absent a particular issuer's ''assurance of reimbursement of * * * reasonable expenses, both direct and indirect.'' Should such ''reasonable expenses'' within the meaning of any or all of these Commission rules be construed to encompass an intermediary's costs of: (1) coordinating an issuer's proxy mailings to multiple nominees and/or (2) operating an electronic proxy voting system whereby street-name customers of broker-dealer clients may instruct the intermediary on how to vote the securities in which they hold a beneficial ownership interest? Should the determination of ''reasonableness'' with respect to any of the foregoing fees vary with the size of the issuer, whether measured in terms of its total market capitalization or public float, or any other criterion?

Should this reasonableness determination take into account any fee-sharing arrangements between a intermediary and its broker dealer clients? In this connection, to what extent should such arrangements reflect actual allocation of costs between an intermediary and such clients? In addressing this question, commenters should attempt to quantify to the extent possible the costs that continue to be borne by those broker-dealers that outsource proxy processing and/or voting obligations to an intermediary, and the relationship of such costs to fulfillment of obligations under Rule 14b–1 of the Act and/or Exchange Rules.

Moreover, the Commission solicits comment on whether an independent audit during the three-year pilot period would be helpful in assessing the reasonableness of the costs passed through to issuers. Finally, the Commission also solicits comment on whether the proposed NYSE nominee fee and incentive fee should be deemed to apply to reimbursement by non-NYSE issuers to NYSE member firms.

In view of the extensive comments requested, the Commission is providing a 45-day comment period. Persons making written submissions should file six copies thereof with the Secretary, Securities and Exchange Commission, 450 Fifth Street, N.W., Washington, D.C. 20549. Copies of the submission, all submission, all subsequent amendments, all written statements with respect to the proposed rule change that are filed with the Commission, and all written communications relating to the proposed rule change between the Commission and any person, other than those that may be withheld from the public in accordance with the provisions of 5 U.S.C. § 552, will be available for inspection and copying at the Commission's Public Reference Section, 450 Fifth Street, N.W., Washington, D.C. 20549. Copies of such filing will also be available for inspection and copying at the principal office of the Exchange. All submissions should refer to File No. SR–NYSE–96–36 and should be submitted by [insert date 45 days from date of publication].

For the Commission, by the Division of Market Regulation, pursuant to delegated authority.

Margaret H. McFarland,

Deputy Secretary.

[FR Doc. 96–32717 Filed 12–24–96; 8:45 am]

BILLING CODE 8010–01–M

[Release No. 34–38059; File No. SR–PTC–96–07]

Self-Regulatory Organizations; Participants Trust Company; Notice of Filing of Proposed Rule Change Relating to the Right of Set-off Upon the Default of a Participant

December 19, 1996.

Pursuant to Section 19(b)(1) of the Securities Exchange Act of 1934 (''Act''),[1] notice is hereby given that on December 2, 1996, the Participants Trust Company (''PTC'') filed with the Securities and Exchange Commission (''Commission'') the proposed rule change (File No. SR–PTC–96–07) as described in Items I, II, and III below, which items have been prepared primarily by PTC. The Commission is publishing this notice to solicit comments on the proposed rule change from interested persons.

I. Self-Regulatory Organization's Statement of the Terms of Substance of the Proposed Rule Change

The proposed rule change relates to PTC's right to set-off credit balances in an account of a defaulting participant against an unpaid debit balance of the defaulting participant.

II. Self-Regulatory Organization's Statement of the Purpose of, and Statutory Basis for, the Proposed Rule Change

In its filing with the Commission, PTC included statements concerning the purpose of and basis for the proposed rule change and discussed any comments it received on the proposed rule change. The text of these statements may be examined at the places specified in Item IV below. PTC has prepared summaries, set forth in sections (A), (B), and (C) below, of the most significant aspects of such statements.[2]

[1] 15 U.S.C. 78s(b)(1).

[2] The Commission has modified the text of the summaries prepared by PTC.

(A) Self-Regulatory Organization's Statement of the Purpose of, and Statutory Basis for, the Proposed Rule Change

The purpose of the proposed rule change is to (1) make explicit PTC's right to set-off credit balances in any proprietary account, agency account, or pledge account of a defaulting participant, against an unpaid debit balance in any other account of the defaulting participant and to establish a priority for application thereof; (2) grant PTC a right of set-off against the agency seg credit balances of a defaulting participant and to include the agency seg credit balance in a participant's Net Debit Monitoring Level (''NDML'') calculation; (3) clarify that in addition to the present representation that securities are deposited in conformity with the terms of any applicable customer agreement, each participant represents and warrants to PTC that securities and other property (including credit balances) held by PTC in an account maintained by such participant are, by reason of these applicable customer agreements, subject to clearing agency rules; and (4) make miscellaneous conforming and technical changes to certain provisions of PTC's rules.

Background

Account Structure

Participants maintain their securities positions at PTC in one or more master account, each of which is comprised of one or more accounts of the following types: proprietary accounts for securities that are held by the participant as principal; agency accounts for securities that are held by the participant as agent; pledgee accounts for securities that are held by the participant as pledgee or pursuant to financing arrangements; and various seg and hold-in-custody accounts associated with the proprietary and agency accounts for purposes of segregation.

Cash Balance Structure

Each Proprietary account, agency account, and pledgee account has a cash balance associated with it against which credits and debits are posted, including amounts owing with respect to securities delivered versus payment intraday to the transfer account associated with the account. Each cash balance is either a credit balance or debit balance depending on whether the participant is in a net funds credit position or debit position with respect to the applicable account to which the cash balance relates at the time the determination is made.

NDML

PTC restricts the net debit amount each participant may owe PTC by imposing a net debit cap by means of the NDML.[3] A participant's NDML is compared to the total of the net cash balances in its proprietary account, agency account, and pledgee account. PTC will not process a transaction that will result in a net debit balance that exceeds a participant's NDML. If a participant is at its NDML limit, it must take steps to reduce the net debit balance. Such a participant may prefund the payment of its debit balance by means of making optional deposits of cash to the participants fund by wiring funds to PTC intraday. A participant may also deliver securities versus payment through PTC's system which will generate a credit to the cash balance of the account from which the securities are transferred and will result in a reduction of the debit balance of that account.

Set-off in the NDML Structure

The ability to apply a defaulting participant's proprietary, agency, and pledgee credit balances against its unpaid settlement obligations is implicit in the NDML structure to assure that the failure of a single participant is covered by PTC's committed line of credit for settlement. It is also implicit in other provisions of PTC's.[4] Participant responsibility for the total amount of its PTC obligations, as monitored by its NDML, also is consistent with PTC's applicant review process in which PTC verifies that a participant has sufficient financial resources to satisfy its total obligations to PTC by assessing the capital and financial resources of the prospective participant without regard to the resources or capital of the customers of the participant.

However, PTC's rules are silent on the aplication of pledgee and agency credit balances in the event a participant does not make complete payment of all account obligations at settlement. In addition, PTC's ''default rule'' states that PTC will set-off any credit balance in a proprietary account of a defaulting participant against an unpaid debit balance in another account. This rule does not make reference to PTC's right to set-off against agency and pledgee credit balance of a defaulting participant.

Proposed amendments

Set-off upon Participant Default

The proposed rule change will clarify that upon a particpant's default in payment of a debit balance PTC will apply any credit balances in the participant's proprietary accounts, pledgee accounts, and agency accounts to reduce the unpaid obligation of the participant consistent with the other provisions of PTC's rules mentioned above. The proposed rule change also will extend PTC'S right of set-off in the event of a participant's default to include any agency seg credit balances of the defaulting participant.

Set-off Priority

The set-off priority will be applied in the same order as governs in the event of a participant default. Specifically, the proposed set-off priority will enable PTC to apply credit balances of a defaulting participant to reduce the participant's unpaid debit balances in the following priority: first, by application of any credit balance in its proprietary account(s); second, in its pledge account(s); third, in its agency account(s); and lastly, in its agency seg account. These credit balance(s) are applied toward payment of unpaid debit balances in the following priority: first, to any agency debit balance(s);[5] second, toward payment of any pledgee debit balance(s); and lastly, toward payment of any proprietary debit balance(s).

Inclusion of Agency Seg Credit Balance

The proposed rule change will modify the NDML calculation to include agency seg credit balances and will give PTC a lien in the agency seg credit balance and a right to set-off against agency seg credit balances in the event a participant defaults in the payment of its other debit balances. The inclusion of agency seg credit balances in the NDML calculation will allow a participant to have the benefit of these credits in calculating its net obligation to PTC.

Agency seg accounts are not permitted to incur a debit balance and may not receive securities subject to a transfer versus payment. Therefore, PTC does not have a lien on securities in an agency seg account. The securities in

[3] The maximum NDML for any participant is the amount of PTC's committed line of credit for settlement, which is currently $2 billion. This maximum is imposed in compliance with the Federal Reserve Policy Statement on Payments System Risk, as amended effective April 13, 1995, which requires private delivery-against-payment securities systems to ''have sufficient safeguards so that it will be able to settle on time if any one of its major participants defaults.''

[4] For example, provisions of PTC's rules that require payment of all debit balances by a participant and prohibit a participant from asserting set-offs or defenses against payment of its debit balances and that grant PTC a lien in cash and property of a participant.

[5] Under PTC's rules, the agency seg account may not have a debit balance.

the agency seg account will remain free of PTC's lien consistence with current rules and the regulatory obligations of the participants with respect to such customer securities that are held in agency seg accounts.

Clarification of Participant Representations and Warranties

The proposed rule change also will clarify that all securities, funds, and other property maintained or transferred to an account at PTC are issued, deposited, transferred, or otherwise applied in conformity with the terms of any applicable customer, pledge, or financing agreement and are by reason of the applicable customer agreements subject to clearing agency rules.

Technical Amendments to PTC's Rules

PTC also is proposing to make certain technical changes to several sections of its rules to conform them to the present rule change. In particular, the definition of NDML will be amended to delete the provision that PTC will require a participant to confirm its ability to pay its debit balance when the NDML is reached. As changed, the definition will conform to the actual NDML procedure applied by PTC and to the substantive provisions of PTC's rules which govern and describe PTC's Net Debit Monitoring procedure.

PTC's rules also will be amended to state that PTC will not process a transaction that causes a debit balance in any single account of a participant to exceed that participant's NDML. This conforms to PTC's current actual procedural control which imposes this additional credit check (in addition to capping a participant's net obligation at the master account level at its NDML) that is not reflected in the current NDML rule.

PTC believes the proposed rule change is consistent with the requirements of Section 17(b)(3)(F) of the Act[6] and the rules and regulations promulgated thereunder because it will facilitate the prompt and accurate clearance and settlement of securities transactions and the safeguarding of securities and funds in PTC's custody and control or for which it is responsible.

B. Self-Regulatory Organization's Statement on Burden on Competition

PTC does not believe that the proposed rule change imposes any burden on competition.

[6] 15 U.S.C. 78q–1(b)(3)(F).

C. Self-Regulatory Organization's Statement on Comments on the Proposed Rule Change Received from Members, Participants or Others

PTC has neither solicited nor received comments on this proposed rule change.

III. Date of Effectiveness of the Proposed Rule Change and Timing for Commission Action

Within thirty-five days of the date of publication of this notice in the Federal Register or such longer period (i) as the Commission may designate up to ninety days of such date if it finds such longer period to be appropriate and publishes its reasons for so finding or (ii) as to which PTC consents, the Commission will:

(A) by order approve such proposed rule change or

(B) institute proceedings to determine whether the proposed rule change should be disapproved.

IV. Solicitation of Comments

Interested persons are invited to submit written data, views, and arguments concerning the foregoing. Persons making written submissions should file six copies thereof with the Secretary, Securities and Exchange Commission, 450 Fifth Street, N.W., Washington, D.C. 20549. Copies of the submission, all subsequent amendments, all written statements with respect to the proposed rule change that are filed with the Commission, and all written communications relating to the proposed rule change between the Commission and any person, other than those that may be withheld from the public in accordance with the provisions of 5 U.S.C. § 552, will be available for inspection and copying in the Commission's Public Reference Room, 450 Fifth Street, N.W., Washington, D.C. 20549. Copies of such filing will also be available for inspection and copying at the principal office of PTC. All submissions should refer to the file number SR–PTC–96–07 and should be submitted by January 16, 1997.

For the Commission by the Division of Market Regulation, pursuant to delegated authority.[7]

Margaret H. McFarland,

Deputy Secretary.

[FR Doc. 96–32771 Filed 12–24–96; 8:45 am]

BILLING CODE 8010–01–M

[7] 17 CFR 200.30–3(a)(12).

STATE DEPARTMENT

[Public Notice No. 2495]

Advisory Committee on International Economic Policy of Working Group on Economic Sanctions; Closed Meeting

The Department of State announces a meeting of the U.S. State Department Advisory Committee on International Economic Policy Working Group on Economic Sanctions on Wednesday, January 8, 1997 at the U.S. Department of State, Washington, D.C. Pursuant to Section 10(d) of the Federal Advisory Committee Act (FACA) and 5 U.S.C. 5526(c)(1), 5 U.S.C 552b(c)(4), and 5 U.S.C. 552b(c)(9)(B), the Department has determined that the meeting will be closed to the public. Matters relative to classified national security information as well as privileged commercial information will be discussed.

For more information contact Joanne Balzano, Working Group on Economic Sanctions, Department of State, Washington, DC 20522–1003, phone: 202–647–1498.

Dated: December 19. 1996.

Vonya B. McCann,

Acting Assistant Secretary for Economic and Business Affairs.

[FR Doc. 96–32825 Filed 12–20–96; 2:47 pm]

BILLING CODE 4710–07–M

DEPARTMENT OF STATE

[Docket Notice 2493]

Advisory Committee on International Economic Policy Notice of Closed Meeting

The Advisory Committee on International Economic Policy will meet at 8:30–12:00 am on Wednesday, January 15, 1997 in Room 1107, U.S. Department of State, 2201 C Street, NW., Washington, DC 20520. The meeting will be hosted by Assistant Secretary of State for Economic and Business Affairs, Alan Larson.

Pursuant to Section 10(d) of the Federal Advisory Committee Act (FACA) and 5 U.S.C. 552b(c)(1), 5. U.S.C. 552b(c)(4), and 5 U.S.C. 552b(c)(9)(B), it has been determined the meeting will be closed to the public. Matters relative to classified national security information as well as privileged commercial information will be discussed. The agenda calls for the discussion of classified and corporate proprietary/security information.

As access to the Department of State is controlled, persons wishing to attend the meeting must notify the ACIEP Executive Secretariat by Friday, January

10, 1997. Each person should provide his or her name, company or organizational affiliation, date of birth, and social security number to the ACIEP Secretariat at telephone number (202) 647–7727 or fax number (202) 647–5713 (Attention: Ann Alexandrowicz). A list will be made up for Diplomatic Security and the Reception Desk at the C Street diplomatic entrance (21st and C Streets, NW), where Department personnel will direct them to Room 1107.

For further information, contact Ann Alexandrowicz, ACIEP Secretariat, U.S. Department of State, Bureau of Economic and Business Affairs, Room 6828, Main State, Washington, DC 20520. She may be reached at telephone number (202) 647–7727 or fax number (202) 647–5713.

Dated: December 20, 1996.

Alan Larson,

Assistant Secretary for Economic and Business Affairs.

[FR Doc. 96–32833 Filed 12–24–96; 8:45 am]

BILLING CODE 4710–07–M

DEPARTMENT OF TRANSPORTATION

Coast Guard

[CGD08–96–055]

Manning Requirements—Pilotage

AGENCY: Coast Guard, DOT.

ACTION: Notice of designated areas.

SUMMARY: This notice lists the designated areas in the Eighth Coast Guard District for which new first class pilot licenses and endorsements will be issued by the Eighth Coast Guard District Regional Examination Centers. These areas have been designated consistent with the revised manning requirements introduced in 1994.

FOR FURTHER INFORMATION CONTACT: CDR Guy A. Tetreau, Marine Safety Division, Eighth Coast Guard District, (504) 589–3624, between 8 a.m. and 4 p.m. Monday through Friday, except federal holidays.

SUPPLEMENTARY INFORMATION:

Introduction

New first class pilot licenses and endorsements will only be issued for those areas within the Eighth Coast Guard District that have been designated by the cognizant Officer in Charge, Marine Inspection (OCMI). Eighth District Regional Examination Centers shall continue to renew existing first class pilot licenses with all previously earned endorsements.

Background

''Designated areas'' are ''* * * those areas within pilotage waters for which first class pilot's licenses or endorsements are issued * * *'' (46 CFR 15.301). These areas are designated by the OCMI based upon the particular hazards of the waterway involved. They are the only areas for which first class pilots licenses and endorsements are required, and for which new first class pilotage licenses and endorsements will be issued.

Eighth Coast Guard District Designated Areas

The following is a list of the Eighth District designated areas for which first class pilots licenses or endorsements are required. Future changes to designated areas will be published in the Federal Register.

MSO Mobile

—The Port St. Joseph Bay Channel from St. Joseph Bay entrance lighted buoy ''SJ'' to the turning basin in Port St. Joe for St. Joseph, FL.

—The St. Andrews Bay Channel from St. Andrews Bay entrance lighted buoy ''SA'' to the port of Panama City, including the area between the Hathaway Bridge and the Dupont Bridge, or St. Andrews Bay, Panama City, FL.

—The Pensacola Bay Channel, Inner Harbor, and its approaches, to three miles from Pensacola Bay, Pensacola, FL.

—The Mobile Alabama Main Ship Channel from Mobile entrance lighted buoy ''m'' to the Cochran Bridge, including Hollinger's Island, Theodore, and Arlington Channels.

—The Horn Island Pass Ship Channel from Horn Island Pass entrance lighted buoy ''HI'' to the Bayou Cassotte turning basin via the Bayou Cassotte Channel, and to the Pascagoula River turning basin via the Pascagoula Channel, Pascagoula, MS.

—The Ship Island Bar Channel from Ship Island Bar lighted buoy ''GP'' to the state dock facility including the Gulfport Ship Channel, Gulfport, MS.

—The coastal approach from St. George Sound, Dog Island Reef light #1 to St. Marks, FL., including the St. Marks River channel.

—The Bayou Labatre entrance channel from the intersection of the Gulf Intracoastal Waterway to the Bayou Labatre Lift Bridge, Bayou Labatre, AL.

MSO New Orleans

—The Lower Mississippi River including:

(1) Southwest Pass from sea buoy to Head of Passes;

(2) from Head of Passes to mile 234 Above Head of Passes (AHOP).

—The Mississippi River Gulf Outlet.

—The Inner Harbor Navigational Canal.

MSO Morgan City

—The Lower Atchafalaya River from Point Au Fer Reef Light (LLN 18030) to Stout's Pass at Atchafalaya River mile 115.5.

—The Gulf Intracoastal Waterway from its intersection with the Lower Atchafalaya River at 20 Grand Point (MM 95.5 WHL) east to the Bayou Boeuf Locks.

MSO Port Arthur

—The Sabine River from the Offshore Sea buoys ''29'' and ''30'' to the north end of the Old Navy piers in Orange, TX.

—The Neches River from the Sabine/Neches intersection to the I–10 Bridge, north of Beaumont, TX.

—The Calcasieu River from the Offshore ''CC'' buoy, in Pilot Boarding Area 4, north to the I–10 Bridge spanning the Calcasieu, including the Industrial Canal at Devil's Elbow, and the deep water channels for Clooney and Coon Islands.

MSO Houston-Galveston

—The Galveston Entrance Channel from the red and white ''GB'' buoy to red buoy ''18.''

—The Galveston Ship Channel from the green ''1'' buoy to Pelican Island Bridge.

—The Boliver Roads Ferry Route from the Bolivar Ferry Landing to the Galveston Ferry Landing, crossing the Bolivar Roads Channel.

—The Texas City Channel from Green ''1'' buoy to the turning basin.

—The Houston Ship Channel from red buoy ''18'' to Buffalo Bayou turning basin.

—The Bayport Ship Channel from the intersection of the Houston Ship Channel to the Bayport turning basin.

—The Freeport Channel from the red and white ''FP'' buoy to the turning basin.

MSO Corpus Christi

—The Matagorda Ship Channel from the sea buoy to Port of Point Comfort.

—The Corpus Christi Ship Channel from the sea buoy to Viola turning basin including La Quinta Channel.

—The Brownsville Ship Channel to Port Isabel.

Dated: November 27, 1996.

T.W. Josiah,

Commander, Eighth Coast Guard District.

[FR Doc. 96–32838 Filed 12–24–96; 8:45 am]

BILLING CODE 4910–14–M

[CGD 96–062]

Natural Gas as Fuel in Marine Applications

AGENCY: Coast Guard, DOT.

ACTION: Notice of meeting; requests for comments.

SUMMARY: On November 26, 1996, (61 FR 60138), the Coast Guard published a notice of meeting and request for comments regarding the use of compressed natural gas (CNG) and liquefied natural gas (LNG) as fuel aboard commercial ships. This notice provides additional information about the location and time of the public meeting, and building security procedures recently established.

DATES: A public meeting will be held on Tuesday, January 14, 1997, from 9 a.m. to 3 p.m.

ADDRESSES: The meeting will be held in room 6200 at the Department of Transportation (DOT) headquarters, Nassif Building, 400 Seventh Street SW., Washington, DC 20590–0001. Room 6200 is located on the 6th floor of the south wing. Interested members of the public wishing to attend the meeting should enter the building at the southwest entrance, located inside the DOT courtyard near the intersection of E Street and Seventh Street. The L'Enfant plaza metro stop also exits into the DOT courtyard.

Due to increased security, it is important for all attendees to have proper identification. In addition, all bags may be checked when entering the building.

FOR FURTHER INFORMATION CONTACT: Lieutenant Commander R. K. Butturini, Mr. Wayne Lundy or Ensign Felicia K. Rydzewski, Systems Engineering Division, Commandant (G–MSE–3), telephone (202) 267–2206 between 7 a.m. and 3 p.m., Monday through Friday, except Federal holidays.

Dated: December 13, 1996.

Joseph J. Angelo,

Director of Standards, Marine Safety and Environmental Protection.

[FR Doc. 96–32820 Filed 12–24–96; 8:45 am]

BILLING CODE 4910–14–M

DPEARTMENT OF TRANSPORTATION

Coast Guard

[CGD08–96–057]

Houston/Galveston Navigation Safety Advisory Committee Meeting

AGENCY: Coast Guard, DOT.

ACTION: Notice of subcommittee meetings.

SUMMARY: The two Subcommittees (Waterways and Navigation) of the Houston/Galveston Navigation Safety Advisory Committee (HOGANSAC) will meet to discuss waterway improvements, aids to navigation, current meters, and various other navigation safety matters affecting the Houston/Galveston area. Both meetings will be open to the public.

DATES: The meeting of the Waterways Subcommittee will be held on Thursday, January 16, 1997 at 9:30 a.m. and immediately following, the Navigation Subcommittee will meet. Members of the public may present written or oral statements at the meetings.

ADDRESSES: The subcommittee meetings will be held at the Port of Houston Authority, 111 East Loop North, Houston, Texas.

FOR FURTHER INFORMATION CONTACT: Captain Kevin Eldridge, Executive Director of HOGANSAC, telephone (713) 671–5101, or Commander Paula Carroll, Executive Secretary of HOGANSAC, telephone (713) 671–5164.

SUPPLEMENTARY INFORMATION: Notice of this meeting is given pursuant to the Federal Advisory Committee Act, 5 U.S.C. App. 2.

Agendas of the Meetings

Subcommittee on Waterways. The tentative agenda includes the following:

(1) Presentation by each work group of its accomplishments and plans for the future.

(2) Review and discuss the work completed by each work group.

Subcommittee on Navigation. The tentative agenda includes the following:

(1) Presentation by each work group of its accomplishments and plans for the future.

(2) Review and discuss the work completed by each work group.

Procedural

All meetings are open to the public. Members of the public may make oral presentations during the meetings.

Information on Services for the Handicapped

For information on facilities or services for the handicapped or to request special assistance at the meetings, contact the Executive Director as soon as possible.

Dated: December 10, 1996.

T.W. Josiah,

Rear Admiral, U.S. Coast Guard Commander, Eighth Coast Guard District.

[FR Doc. 96–32842 Filed 12–24–96; 8:45 am]

BILLING CODE 4910–14–M

DEPARTMENT OF TRANSPORTATION

Maritime Administration

[Docket S–941]

Sargeant Marine, Inc.; Notice of Application for Permission Under Section 506 of the Merchant Marine Act, 1936, as Amended, To Operate in the Domestic Trade

Notice is hereby given that Sargeant Marine, Inc. (Sargeant), by application dated December 17, 1996, has applied for written permission under section 506 of the Merchant Marine Act, 1936, as amended (Act), for the temporary transfer of the construction-differential subsidy (CDS) built asphalt tanker ASPHALT COMMANDER (ex-FALCON CHAMPION) in the domestic trade, commencing on or about January 15, 1997. Sargeant states that it is scheduled to load 200,000 barrels (bbls.) of asphalt at Garryville, Louisiana for discharge in New York, New York. The cargo will be delivered at a temperature of 300 degrees fahrenheit, five days after completion of loading and must be discharged at 6000 bbls. per hour.

Section 506 permits the temporary transfer for up to six months of CDS-built vessels ''whenever the Secretary determines that such transfer is necessary or appropriate to carry out the purposes of the Act.'' Consent by MARAD is to be conditioned upon payment to MARAD, upon such terms as MARAD may prescribe, of ''an amount which bears the same proportion to the CDS paid by the Secretary as such temporary period bears to the entire economic life of the vessel.''

Although publication of a Notice with respect to Sargeant's request for permission under section 506 is not required, the Maritime Administration believes that it is appropriate to provide an opportunity for interested parties to comment on Sargeant's application.

Any person, firm, or corporation having any interest in the application

for section 506 permission and desiring to submit comments concerning the application must file written comments in triplicate, to the Secretary, Maritime Administration, Room 7210, Nassif Building, 400 Seventh Street, SW., Washington, DC, 20590, by the close of business on December 31, 1996. The Maritime Administration, as a matter of discretion, will consider any comments submitted and take such action with respect thereto as may be deemed appropriate.

(Catalog of Federal Domestic Assistance Program N. 20.800 Construction-Differential Subsidies (CDS))

By order of the Maritime Administrator.

Edmond T. Sommer,

Acting Secretary.

[FR Doc. 96–32710 Filed 12–24–96; 8:45 am]

BILLING CODE 4910–81–M

Research and Special Programs Administration

[Docket No. PS–142; Notice 4]

Guidance on Performance Measures for Use in the Pipeline Risk Management Demonstration Program

AGENCY: Office of Pipeline Safety, DOT.

ACTION: Notice.

SUMMARY: The Research and Special Programs Administration's (RSPA), Office of Pipeline Safety (OPS) is currently involved in the development of the Pipeline Risk Management Demonstration Program required by the Accountable Pipeline Safety and Partnership Act of 1996. The demonstration program will invite risk management proposals from pipeline operators that are interested in demonstrating plans to reallocate their resources in ways to achieve superior safety on their pipeline systems by more effective methods than currently required by the pipeline safety regulations. On November 15, 1996, RSPA published Program Framework for Risk Management Demonstrations'' (61 FR 58605) that included a statement that a guidance document for assessing risk management would soon be available for public comment. This document, ''Guidance on Performance Measures For Use in the Pipeline Risk Management Demonstration Program,'' prepared by the Joint Risk Assessment Quality Team, is now available for public review and comment. This document provides guidance for monitoring individual demonstration projects and to enable OPS to determine the effectiveness of risk management as a regulatory alternative to 49 CFR Parts 190–199. OPS invites the public to review and comment on this draft.

ADDRESSES: Comments should be sent to the RSPA dockets unit, U.S. Department of Transportation, 400 7th St., SW., Washington, DC 20590.

FOR FURTHER INFORMATION CONTACT: Eben M. Wyman, (202) 366–0918, or by E-mail (eben.wyman@rspa.dot.gov), for copies of this document; or John Hess, (202) 366–4576, or by E-mail (john.hess@rspa.dot.gov) or via the World Wide Web at (http://opspm.volpe60.dot.gov.) regarding the subject matter of this Notice. Contact the Dockets Unit, (202) 366–5046, for other material in the docket.

Issued in Washington, DC, on December 18, 1996.

Richard B. Felder,

Associate Administrator for Pipeline Safety

[FR Doc. 96–32704 Filed 12–24–96; 8:45 am]

BILLING CODE 4910–60–P

Surface Transportation Board

[STB Ex Parte No. 290 (Sub No. 5) (97–1)]

Quarterly Rail Cost Adjustment Factor

AGENCY: Surface Transportation Board.

ACTION: Approval of rail cost adjustment factor.

SUMMARY: The Board has approved a first quarter 1997 rail cost adjustment factor (RCAF) and cost index filed by the Association of American Railroads. The first quarter 1997 RCAF (Unadjusted) is 1.116 an increase of 2.2% from the fourth quarter 1996 RCAF of 1.092. The first quarter 1997 RCAF (Adjusted) is 0.774. The first quarter 1997 RCAF–5 is 0.757.

EFFECTIVE DATE: January 1, 1997.

FOR FURTHER INFORMATION CONTACT: H. Jeff Warren, (202) 927–6243. TDD for the hearing impaired: (202) 927–5721.

SUPPLEMENTARY INFORMATION: Additional information is contained in the Board's decision. To purchase a copy of the full decision write to, call, or pick up in person from: DC NEWS & DATA, INC., Room 2229, 1201 Constitution Avenue, N.W., Washington, DC 20423, or telephone (202) 289–4357. [Assistance for the hearing impaired is available through TDD services (202) 927–5721.]

This action will not significantly affect either the quality of the human environment or energy conservation.

Pursuant to 5 U.S.C. 605(b), we conclude that our action will not have a significant economic impact on a substantial number of small entities within the meaning of the Regulatory Flexibility Act.

Decided: December 19, 1996.

By the Board, Chairman Morgan, Vice Chairman Simmons, and Commissioner Owen.

Vernon A. Williams,

Secretary.

[FR Doc. 96–32773 Filed 12–24–96; 8:45 am]

BILLING CODE 4915–00–P

[STB Finance Docket No. 33317]

Union Pacific Railroad Company—Trackage Rights Exemption—Duluth, Missabe and Iron Range Railway Company

Duluth, Missabe and Iron Range Railway (DMIR) has agreed to grant overhead trackage rights to Union Pacific Railroad Company (UP) over a total of approximately 0.83 miles of rail line located in Douglas County, WI, between milepost 17.79 near Saunders (at the BN connection), and milepost 16.96 near Pokegama (at the yard of Duluth, Winnipeg and Pacific Railway).[1] The transaction was expected to be consummated on December 17, 1996.

This notice is filed under 49 CFR 1180.2(d)(7). If the notice contains false or misleading information, the exemption is void *ab initio.* Petitions to revoke the exemption under 49 U.S.C. 10502(d) may be filed at any time. The filing of a petition to revoke will not stay the transaction.

An original and 10 copies of all pleadings, referring to STB Finance Docket No. 33317, must be filed with the Surface Transportation Board, Office of the Secretary, Case Control Branch, 1201 Constitution Avenue, N.W., Washington, DC 20423 and served on: Joseph D. Anthofer, General Attorney, 1416 Dodge Street, #830, Omaha, NE 68179.

As a condition to this exemption, any employees affected by the trackage rights will be protected by the conditions imposed in *Norfolk and Western Ry. Co.—Trackage Rights—BN,* 354 I.C.C. 605 (1978), as modified in *Mendocino Coast Ry., Inc.—Lease and Operate,* 360 I.C.C. 653 (1980).

Decided: December 17, 1996.

[1] The trackage rights transaction is an extension of overhead trackage rights granted to Chicago and North Western Railway Company (CNW) between South Itasca and Saunders, WI. *See* 47 FR 42658 (September 21, 1982). On April 25, 1995, CNW was merged into UP pursuant to authority granted in Finance Docket No. 32133, and UP continued the trackage rights operation.

By the Board, David M. Konschnik, Director, Office of Proceedings.

Vernon A. Williams,

Secretary.

[FR Doc. 96–32774 Filed 12–24–96; 8:45 am]

BILLING CODE 4915–00–P

DEPARTMENT OF THE TREASURY

[Treasury Order Number 100–01]

The Department of the Treasury Seal

December 17, 1996.

1. Pursuant to 31 U.S.C. § 301(g) and 31 U.S.C. § 321(b) and by the authority vested in the Secretary of the Treasury, I hereby approve the design of the Treasury seal which accompanies this Order (and which is described below) as the official seal of the Department for single color reproductions. This seal shall be used on letterhead stationery and other official Treasury documents.

2. The central device of the seal is essentially the same as that used by the Department throughout its entire history. It is a shield containing scales, a chevron with 13 stars, and a key. An outer ring surrounding the shield carries the inscription THE DEPARTMENT OF THE TREASURY 1789 in the Cheltenham Bold type font.

3. Single color reproduction guidelines are as follows: scales, chevron, and key are reproduced on an open shield; the inscription is reproduced on an open ring. When printing the seal in blue ink only on credentials, PMS 290 should be used. PMS stands for Pantone Matching System, which is the printing industry standard for describing and matching ink colors.

4. The standard for reproduction of the seal in three colors remains unchanged from the seal adopted by the Department in 1968 (1968 seal). Multi-color reproduction guidelines are as follows: shield in gold (options are: PMS 110, PMS 873 or bright gold foil); scales, chevron (stars in white, i.e., reversed) and key in light blue (PMS 292). Inscription is reversed out of dark blue (PMS 540).

5. The official seal in use since 1968 is identical except that the type in the outer ring was reversed out of a dark background. The 1968 seal shall continue to be an authorized optional seal. Use of the new seal should be phased in as requirements for printing letterhead stationery and other documents carrying the seal arise. Existing dies and plates of the 1968 seal are considered equally effective as the official seal and shall continue to be used until there is a need to replace them.

6. The Assistant Secretary (Management) and Chief Financial Officer is hereby delegated the authority to approve future changes to the seal or some elements of it to the extent such changes may be necessary for efficiency in printing and reproduction. This delegation is made with the understanding that any future changes to the seal shall be set forth in a Treasury Directive and published in the Federal Register.

7. *CANCELLATION*. This Order supersedes Treasury Order 100–01, ''Treasury Seal,'' dated January 29, 1968.

Robert E. Rubin,

Secretary of the Treasury.

BILLING CODE 4810–25–C

[FR Doc. 96–32727 Filed 12–24–96; 8:45 am]
BILLING CODE 4810–25–C

UNITED STATES INFORMATION AGENCY

Media Management Training Program for Albania

ACTION: Notice; request for proposals.

SUMMARY: The Office of Citizen Exchanges of the United States Information Agency's Bureau of Educational and Cultural Affairs announces an open competition for an assistance award. Public and private non-profit organizations meeting the provisions described in IRS regulation 26 CFR 1.501(c)(3)–1 may apply to develop training programs in media management for Albania.

Overall grant making authority for this program is contained in the Mutual Educational and Cultural Exchange Act of 1961, Public Law 87–256, as amended, also known as the Fulbright-Hays Act. The purpose of the Act is ''to enable the Government of the United States to increase mutual understanding between the people of the United States and the people of other countries . . . ; to strengthen the ties which unite us with other nations by demonstrating the educational and cultural interests, developments, and achievements of the people of the United States and other nations . . . and thus to assist in the development of friendly, sympathetic and peaceful relations between the United States and the other countries of the world.'' The funding authority for the program cited above is provided through the Support for Eastern European Democracies Act.

Programs and projects must conform with Agency requirements and guidelines outlined in the Solicitation Package. USIA projects and programs are subject to the availability of funds.

ANNOUNCEMENT TITLE AND NUMBER: All communications with USIA concerning this announcement should refer to the above title and reference number E/P–97–19.

DEADLINE PROPOSALS: All copies must be received at the U.S. Information Agency by 5 p.m. Washington, D.C. time on Friday, February 7, 1997. Faxed documents will not be accepted, nor will documents postmarked February 7, 1997 but received at a later date. It is the responsibility of each applicant to ensure that proposals are received by the above deadline.

Program activities should begin after May 1, 1997.

FOR FURTHER INFORMATION, CONTACT: The Office of Citizen Exchanges, E/PE, Room 216, U.S. Information, U.S. Information Agency, 301 4th Street, S.W., Washington, D.C. 20547, telephone: 202–619–5319, fax: 202–619–4350, e-mail address: (cminer@usia.gov) to request a Solicitation Package containing more detailed award criteria, required application forms, and standard guidelines for preparing proposals, including specific criteria for preparation of the proposal budget.

TO DOWNLOAD A SOLICITATION PACKAGE VIA INTERNET: The entire Solicitation Package may be downloaded from USIA's websit at http://www.usia.gov/ or from the Internet Gopher at gopher://gopher.usia.gov. Under the heading ''International Exchanges/Training,'' select ''Request for Proposals (RFPs).'' Please read ''About the Following RFPs'' before downloading.

Please specify USIA Program Officer Christina Miner on all inquiries and correspondences. Interested applicants should read the complete Federal Register announcement before sending inquiries or submitting proposals. Once the RFP deadline has passed, Agency staff may not discuss this competition in any way with applicants until the Bureau proposals review process has been completed.

SUBMISSIONS: Applicants must follow all instruction given in the Solicitation Package. The original and eight copies of the application should be sent to: U.S. Information Agency, Ref.: e/P–97–19, Office of Grants Management, E/XE, Room 326, 301 4th Street, S.W., Washington, D.C. 20547.

Applicants must also submit the ''Executive Summary'' and ''Proposal

Narrative'' sections of the proposal on a 3.5'' diskette, formatted for DOS. This material must be provided in ASCII text (DOS) format with a maximum line length of 65 characters. USIA will transmit these files electronically to USIS posts overseas for their review, with the goal of reducing the time it takes to get posts' comments for the Agency's grants review process.

DIVERSITY GUIDELINES: Pursuant to the Bureau's authorizing legislation, programs must maintain a non-political character and should be balanced and representative of the diversity of American political, social, and cultural life. ''Diversity'' should be interpreted in the broadest sense and encompass differences including, but not limited to ethnicity, race, gender, religion, geographic location, socio-economic status, and physical challenges. Applicants are strongly encouraged to adhere to the advancement of this principle both in program administration and in program content. Please refer to the review criteria under the 'Support for Diversity' section for specific suggestions on incorporating diversity into the total proposal.

SUPPLEMENTARY INFORMATION:

Overview

USIA requests proposals that will provide media management training for Albanian media professionals in radio and television. Training should focus on the management of media as a business: station management, newsroom management, advertising, marketing, personnel, and public relations. A secondary focus should be professional journalistic ethics, including topics such as checkbook journalism; observation of attribution and interview ground rules; and balance in political coverage. Project activities may include: internships; study tours; short-term training; consultations; and intensive workshops taking place in the United States or in Albania. Proposals should reflect the authors' understanding of the political, economic, and social environment in which the program activity will take place. Proposals which take into account the need for ongoing sharing of information and training beyond the period of the USIA grant will be viewed more favorably than those that do not.

Exchange and training programs supported by institutional grants should operate at two levels: they should enhance institutional relationships; and they should offer practical and comparative information to individuals to assist them with their professional responsibilities. Strong proposals usually have the following characteristics: an existing partner relationship between an American organization and a host-country institution; proven tract record of conducting program activity; cost sharing from American or in-country sources, including donations of air fares, hotel and housing costs; experienced staff with language facility; and a clear, convincing plan showing how permanent results will be accomplished as a result of the activity funded by the grant. USIA wants to see tangible forms of time and money contributed to the project by the prospective grantee institution, as well as funding from third party sources.

Note: Research projects or projects limited to technical issues are not eligible for support nor are film festivals or exhibits. Exchange programs for students or faculty or proposals that request support for the development of university curricula or for degree-based programs are also ineligible under this RFP. Proposals to link university departments or to exchange faculty and/or students are funded by USIA's Office of Academic Programs (E/A) under the University Affiliation Program and should not be submitted in response to this RFP.

Guidelines

1. All grant proposals must clearly describe the type of persons who will participate in the program as well as the process by which participants will be selected. Note that participants should be professionals working in the field of media management and not members of university faculties. In the selection of all foreign participants, USIA an USIS posts retain the right to nominate participants and to approve or reject participants recommended by the program institution. Programs must also comply with J–1 visa regulations.

2. Programs that include internships in the U.S should provide letters tentatively committing host institutions to support the internships. Letters of commitment from the hosts of study tour site visits should also be included, if applicable.

3. Applicants are encouraged to consult with USIS offices regarding program content and partner institutions before submitting proposals. Award-receiving will be expected to maintain contact with the USIS post throughout the grant period.

Proposal Budget

Please refer to the Solicitation Package for complete budget guidelines instructions.

Applicants must submit a detailed line item budget based on specific instructions in the Program and Budget Guidelines of the Proposal Submission Instructions. Proposals for less than $150,000 will receive preference. Proposals with strong cost-sharing will be given priority.

Grants awarded to eligible organizations with less than four years of experience in conducting international exchange programs will be limited to $60,000.

The following project costs are eligible for consideration for funding:

1. International and domestic air fares; visas; transit costs; ground transportation costs.

2. Per Diem. For the U.S. program, organizations have the option of using a flat $140/day for program participants or the published U.S. Federal per diem rates for individual American cities. For activities outside the U.S., the published Federal per diem rates must be used. Note: U.S. escorting staff must use the published Federal per diem rates, not the flat rate.

3. Interpreters. If needed, interpreters for the U.S. program are provided by the U.S. State Department Language Services Division. Typically, a pair of simultaneous interpreters is provided for every four visitors. USIA grants do not pay for foreign interpreters to accompany delegations from their home country. Grant proposal budgets should contain a flat $140/day per diem for each Department of State interpreter, as well as home-program-home air transportation of $400 per interpreter plus any U.S. travel expenses during the program. Salary expenses are covered centrally and should not be part of an applicant's proposed budget.

4. Book and cultural allowance. Participants are entitled to and escorts are reimbursed a one-time cultural allowance of $150 per person, plus a participant book allowance of $50. U.S. staff do not get these benefits.

5. Consultants. May be used to provide specialized expertise or to make presentations. Daily honoraria generally do not exceed $250 per day. Subcontracting organizations may also be used, in which case the written agreement between the prospective grantee and subcontractor should be included in the proposal.

6. Room rental, which generally should not exceed $250 per day.

7. Materials development. Proposals may contain costs to purchase, develop, and translate materials for participants.

8. One working meal per project. Per capita costs may not exceed $5–$8 for a lunch and $14–$20 for a dinner, excluding room rental. The number of invited guests may not exceed participants by more than a factor of two-to-one.

9. A return travel allowance of $70 for each participant which is to be used for incidental expenditures incurred during international travel.

10. All USIA-funded delegates will be covered under the terms of a USIA-sponsored health insurance policy. The premium is paid by USIA directly to the insurance company.

11. Other costs necessary for the effective administration of the program, including salaries for grant organization employees, benefits, and other direct and indirect costs per detailed instructions in the application package.

Review Process

USIA will acknowledge receipt of all proposals and will review them for technical eligibility. Proposals will be deemed ineligible if they do not fully adhere to the guidelines stated herein and in the Solicitation Package. Eligible proposals will be forwarded to panels of USIA officers for advisory review. All eligible proposals will be reviewed by the program office, as well as the USIA Office of Eastern Europe and NIS Affairs and the USIA post overseas, where appropriate. Proposals may be reviewed by the Office of the General Counsel or by other Agency elements. Funding decisions are at the discretion of the USIA Associate Director for Educational and Cultural Affairs. Final technical authority for assistance awards (grants or cooperative agreements) resides with the USIA grants officer.

Review Criteria

Technically eligible applications will be competitively reviewed according to the criteria stated below. These criteria are not rank ordered and all carry equal weight in the proposal evaluation:

1. Quality of the Program Idea: Proposals should respect to the program requirements of the RFP.

2. Program Planning and Ability to Achieve Objectives: Program objectives should be stated clearly and precisely and should reflect the applicant's expertise in the subject area and the region. Goals should be reasonable and attainable. A detailed agenda and relevant work plan should demonstrate how objectives will be achieved, including a timetable for completion of major tasks. The substance of seminars, presentations, consulting, internships, and itineraries should be spelled out in detail. Responsibilities of in-country partners should be clearly described.

3. Support of Diversity: Proposals should demonstrate substantive support of the Bureau's policy on diversity. Achievable and relevant features should be cited in both program administration (selection of participants, program venue and program evaluation) and program content (orientation and wrap-up sessions, program meetings, resource materials, and follow-up meetings).

4. Institutional Capability: Proposed personnel and institutional resources should be adequate and appropriate to achieve the project's goals. The narrative should demonstrate proven ability to handle logistics. Proposal should reflect the institution's expertise in the subject area and knowledge of the conditions in Albania.

5. Follow-on Activities: Proposals should provide a plan for continued follow-on activity (without USIA support) which ensures that USIA supported programs are not isolated events.

6. Project Evaluation: Proposals must include a plan and methodology to evaluate the project's success, both as the activities unfold and at the end of the program. USIA recommends that the proposal include a draft survey questionnaire and/or plan for use of another measurement technique (such as a focus group) to link outcomes to original project objectives. Award-receiving organizations/institutions will be expected to submit intermediate reports after each project component is concluded or quarterly, whichever is less frequent.

7. Cost Effectiveness/Cost Sharing: Overhead and administrative costs for the proposal, including salaries, honoraria, and subcontracts for services, should be kept low. All other items should be necessary and appropriate. Proposals should show cost-sharing, both contributions from the applicant and from other sources.

Notice

The terms and conditions published in this RFP are binding and may not be modified by any USIA representative. Explanatory information provided by the Agency that contradicts published language will not be binding. Issuance of the RFP does not constitute an award commitment on the part of the Government. The Agency reserves the right to reduce, revise, or increase proposal budgets in accordance with the needs of the program and the availability of funds. Awards made will be subject to periodic reporting and evaluation requirements.

Notification

Final awards cannot be made until funds have been appropriated by Congress, allocated and committed through internal USIA procedures.

Dated: December 18, 1996.

Dell Pendergrast,

Deputy Associate Director for Educational and Cultural Affairs.

[FR Doc. 96–32512 Filed 12–24–96; 8:45 am]

BILLING CODE 8230–01–M

Corrections

Federal Register
Vol. 61, No. 249
day, December 26, 1996

This section of the FEDERAL REGISTER contains editorial corrections of previously published Presidential, Rule, Proposed Rule, and Notice documents. These corrections are prepared by the Office of the Federal Register. Agency prepared corrections are issued as signed documents and appear in the appropriate document categories elsewhere in the issue.

DEPARTMENT OF JUSTICE

Drug Enforcement Administration

Irene C. Kelly, a/k/a Ayter Yalincak, a/k/a Imrag Yalincak; Revocation of Registration

Correction

In notice document 96–30380 appearing on page 60729 in the issue of Friday, November 29, 1996, make the following corrections:

On the same page, in the third column, in the first paragraph, in the first line, ''Accordinly'' should read ''Accordingly''.

On the same page, in the third column, in the first paragraph, in the fourth line, ''823'' should read ''823 and 824''.

BILLING CODE 1505–01–D

DEPARTMENT OF JUSTICE

Drug Enforcement Administration

Earl G. Rozeboom, M.D.; Revocation of Registration

Correction

In notice document 96–30377 appearing on page 60730 in the issue of Friday, November 20, 1996, make the following corrections:

On the same page, in the first column, in the first line, ''March 4,'' should read ''March 5,''.

On the same page, in the third column, in the third line, ''AR404611'' should read ''AR4044611''.

BILLING CODE 1505–01–D

federal register

Thursday
December 26, 1996

Part II

Securities and Exchange Commission

17 CFR Part 270

Private Investment Companies; Proposed Rule

SECURITIES AND EXCHANGE COMMISSION

17 CFR Part 270

[Release No. IC–22405, International Series Release No. 1037, File No. S7–30–96]

RIN 3235–AH09

Private Investment Companies

AGENCY: Securities and Exchange Commission.

ACTION: Proposed rules.

SUMMARY: The Commission is publishing for comment new rules under the Investment Company Act of 1940 to implement provisions of the National Securities Markets Improvement Act of 1996 that apply to private investment companies. The proposed rules would define certain terms for purposes of the new exception from regulation under the Investment Company Act for private investment companies whose investors are all highly sophisticated investors, termed ''qualified purchasers.'' The proposed rules also would address certain transition issues related to existing private investment companies that have no more than 100 investors and certain other matters related to private investment companies.

DATES: Comments must be received on or before February 10, 1997.

ADDRESSES: Comments should be submitted in triplicate to Jonathan G. Katz, Secretary, Securities and Exchange Commission, 450 Fifth Street, N.W., Stop 6–9, Washington, D.C. 20549. Comments also may be submitted electronically at the following E-mail address: rule-comments@sec.gov. All comment letters should refer to File No. S7–30–96; this file number should be included on the subject line if E-mail is used. Comment letters will be available for public inspection and copying in the Commission's Public Reference Room, 450 Fifth Street, N.W., Washington, D.C. 20549. Electronically submitted comment letters also will be posted on the Commission's Internet web site (http://www.sec.gov).

FOR FURTHER INFORMATION CONTACT: David P. Mathews, Senior Counsel, Nadya B. Roytblat, Assistant Office Chief, or Kenneth J. Berman, Assistant Director, at (202) 942–0690, Office of Regulatory Policy, Division of Investment Management, Stop 10–2, Securities and Exchange Commission, 450 Fifth Street, N.W., Washington, D.C. 20549.

SUPPLEMENTARY INFORMATION: The Commission today is requesting public comment on proposed new rules 2a51–1, 2a51–2, 2a51–3, 3c–1, 3c–5, 3c–6 and 3c–7 under the Investment Company Act of 1940 [15 USC 80a] (the ''Investment Company Act'' or ''Act'').

Table of Contents

Executive Summary
I. Background
A. Qualified Purchaser Funds
B. Amendments to Section 3(c)(1)
C. Other Directed Rulemaking
II. Rules Relating to Qualified Purchaser Funds
A. Investments
1. Definition of Investments
a. Securities
b. Real Estate
c. Commodity Interests
d. Cash and Cash Equivalents
e. Request for Comment
2. Determining the Amount of Investments
a. Value of Investments
b. Deductions from Amount of Investments
i. Certain Indebtedness
ii. Other Payments
iii. Request for Comment
3. Jointly-Held Investments
4. Investments Held by Certain Corporate Affiliates
5. Good Faith Reliance on Certain Documentation
B. Definitions of Beneficial Ownership
1. The Grandfather Provision
2. The Consent Provision
C. Conforming Rule
D. Non-Exclusive Safe Harbor for Certain Section 3(c)(7) Funds
III. Other Rules for Private Investment Companies
A. Transition Rule for Section 3(c)(1) Funds
B. Investments by Fund Employees
C. Certain Transfers
IV. General Request for Comment
V. Cost/Benefit Analysis
VI. Summary of Regulatory Flexibility Analysis
VII. Statutory Authority
Text of Proposed Rules

Executive Summary

The Commission is proposing rules to implement certain provisions of the National Securities Markets Improvement Act of 1996 (the ''1996 Act''), which was signed into law by President Clinton on October 11, 1996. The 1996 Act, among other things, added section 3(c)(7) to the Investment Company Act to create a new exclusion from regulation under the Act for private investment companies that consist solely of highly sophisticated ''qualified purchasers'' owning or investing on a discretionary basis a specified amount of ''investments'' (''section 3(c)(7) funds''). The 1996 Act also amended section 3(c)(1) of the Investment Company Act, which excludes from regulation under the Act private investment companies with 100 or fewer ''beneficial owners'' (''section 3(c)(1) funds''). Reflecting a relationship between section 3(c)(1) and new section 3(c)(7), the 1996 Act contains provisions that permit an existing section 3(c)(1) fund to convert into a section 3(c)(7) fund or invest in a section 3(c)(7) fund as a qualified purchaser, subject to certain requirements designed to protect the section 3(c)(1) fund's existing beneficial owners.

The 1996 Act requires the Commission to prescribe rules defining the terms ''investments'' and ''beneficial owner'' relevant to the new provisions by April 9, 1997. Other changes to the provisions of the Investment Company Act relating to private investment companies require Commission rulemaking as well. The Commission is proposing for public comment new rules under the Investment Company Act that would:

- Define the term ''investments'' for purposes of the qualified purchaser definition;
- Define the term ''beneficial owner'' for purposes of the provisions that permit an existing section 3(c)(1) fund to convert into a section 3(c)(7) fund or to be treated as a qualified purchaser;
- Address certain interpretative issues under section 3(c)(7);
- Permit certain section 3(c)(1) funds to rely on the pre–-1996 Act provisions of section 3(c)(1) rather than restructure their existing relationships with investors;
- Permit knowledgeable employees of a section 3(c)(1) or a section 3(c)(7) fund (referred to collectively in this Release as ''private funds''), and knowledgeable employees of affiliates of these funds, to invest in the fund; and
- Address transfers of securities in a private fund when the transfer was caused by legal separation, divorce, death, and certain other involuntary events.

I. Background

Section 3(c)(1) of the Investment Company Act excludes from regulation under the Act certain private investment companies ''whose outstanding securities (other than short-term paper) are beneficially owned by not more than one hundred persons.'' [1] A wide variety of investment vehicles rely on section 3(c)(1), ranging from small groups of individual investors, such as investment clubs, to venture capital and other investment pools designed primarily for sophisticated investors.[2]

[1] 15 U.S.C. 80a–3(c)(1). In addition, the section 3(c)(1) fund must be an issuer that ''is not making and does not presently propose to make a public offering of its securities.''

[2] *See* Division of Investment Management, SEC, Protecting Investors: A Half Century of Investment

A. Qualified Purchaser Funds

In 1992, the Commission concluded that the 100-investor limit, while reasonably reflecting the point beyond which federal regulatory concerns incorporated in the Investment Company Act are raised, may place unnecessary constraints on investment pools that sell their securities exclusively to sophisticated purchasers.[3] The Commission recommended that Congress amend the Investment Company Act to create an alternative exclusion for investment companies whose securities are owned exclusively by sophisticated investors.

Congress implemented this recommendation in the 1996 Act. New section 3(c)(7) of the Investment Company Act creates an exclusion for investment companies whose investors consist solely of ''qualified purchasers.''[4] New section 2(a)(51)(A) of the Investment Company Act defines the term qualified purchaser as (i) any natural person who owns not less than $5 million in investments,[5] (ii) a family-owned company (''Family Company'') that owns not less than $5 million in investments,[6] (iii) certain trusts,[7] and (iv) any other person (*e.g.*, an institutional investor) that owns and invests on a discretionary basis not less than $25 million in investments.[8] The 1996 Act directs the Commission to prescribe rules defining the term ''investments'' for purposes of determining whether a prospective investor in a section 3(c)(7) fund (''prospective qualified purchaser'') meets the $5 million/$25 million thresholds.[9]

Section 3(c)(7) includes a ''grandfather'' provision that allows an existing section 3(c)(1) fund to convert into a section 3(c)(7) fund (''Grandfathered Fund''). The outstanding securities of a Grandfathered Fund may be beneficially owned by as many as 100 persons who are not qualified purchasers, provided that these persons acquired their investment in the Grandfathered Fund on or before September 1, 1996.[10] The grandfather provision is designed to allow an existing section 3(c)(1) fund wishing to avail itself of the new section 3(c)(7) exclusion to continue its existing relationships with investors who are not qualified purchasers.[11]

The grandfather provision requires the Grandfathered Fund, prior to the conversion, to provide each beneficial owner of its securities (i) notice of the fund's intention to become a section 3(c)(7) fund and (ii) an opportunity to redeem such owner's interest in the fund.[12] This provision is designed to enable an investor in an existing section 3(c)(1) fund to dispose of an investment, without penalty, if the investor does not choose to continue its investment in a private investment company that no longer will be limited to 100 investors.[13] The 1996 Act directs the Commission to define the term ''beneficial owner'' for this purpose.[14] The 1996 Act also requires an existing section 3(c)(1) fund that wishes to become a qualified purchaser to obtain the consent of the beneficial owners of its securities and certain other persons (the ''consent provision'').[15]

The Commission is proposing a rule under the Investment Company Act to define the term ''investments'' for purposes of the qualified purchaser definition. The Commission also is proposing rules to define the term ''beneficial owner'' for purposes of the grandfather and the consent provisions, and to address other transitional and interpretative issues related to section 3(c)(7).

B. Amendments to Section 3(c)(1)

To prevent circumvention of the 100-investor limit, section 3(c)(1)(A) (the ''look-through provision'') requires, in some instances, that a fund seeking to rely on the provision ''look through'' certain companies (*e.g.*, corporations, partnerships and other investors that are not natural persons) that hold its voting securities and count the company's security holders as beneficial owners of its securities.[16] The look-through provision currently applies (i) if a company owns 10% or more of a section 3(c)(1) fund's voting securities (''first 10% test'') and (ii) more than 10% of the company's total assets are invested in section 3(c)(1) funds generally (''second 10% test'').[17]

The 1996 Act's amendments to section 3(c)(1) are designed, in part, to

Company Regulation at 104 (1992) (hereinafter Protecting Investors Report).

[3] 138 Cong. Rec. at S4822 (daily ed. Apr. 2, 1992) (Memorandum of the Securities and Exchange Commission in Support of the Small Business Incentive Act of 1992) (hereinafter Commission Memorandum). Some commenters also suggested that section 3(c)(1)'s 100-investor limit may have had the effect of providing an incentive for Americans to invest in unregulated off-shore markets. *See* S. Rep. No. 293, 104th Cong., 2d Sess. at 10 (1996) (hereinafter Senate Report); H.R. Rep. No. 622, 104th Cong., 2d Sess. at 18 (1996) (hereinafter House Report). These Reports relate to bills that were eventually enacted as the National Securities Markets Improvement Act of 1996, Pub. L. No. 104–290 (1996) (the ''1996 Act'') (to be codified in scattered sections of the United States Code (''U.S.C.''); U.S.C. references are to the sections in which the relevant provisions of the 1996 Act will be codified).

[4] 1996 Act section 209; 15 U.S.C. 80a–3(c)(7). As is the case for a section 3(c)(1) fund, a section 3(c)(7) fund cannot make, or propose to make, a public offering of its securities.

[5] 15 U.S.C. 80a–2(a)(51)(A)(i).

[6] A Family Company is a company ''that is owned directly or indirectly by or for two or more natural persons who are related as siblings or spouse (including former spouses), or direct lineal descendants by birth or adoption, spouses of such persons, the estates of such persons, or foundations, charitable organizations, or trusts established for the benefit of such persons . . . .'' 15 U.S.C. 80a–2(a)(51)(A)(ii).

[7] A trust may be a qualified purchaser if (i) it was not formed for the specific purpose of acquiring the securities offered, and (ii) the trustee or other person authorized to make decisions with respect to the trust, and each settlor or other person who has contributed assets to the trust, are qualified purchasers. 15 U.S.C. 80a–2(a)(51)(A)(iii).

[8] A qualified purchaser that meets the $25 million threshold may act for its own account or for the accounts of other qualified purchasers. 15 U.S.C. 80a–2(a)(51)(A)(iv).

[9] 1996 Act section 209(d)(2). Such rules are required to be prescribed by April 9, 1997 (180 days after the enactment of the 1996 Act). The provisions of the 1996 Act enacting section 3(c)(7) take effect on the earlier of April 9, 1997 or the date on which the rulemaking defining the term investments is completed.

[10] 15 U.S.C. 80a–3(c)(7)(B).

[11] *See* 142 Cong. Rec. at E1938 (Oct. 21, 1996) (Remarks of Hon. John D. Dingell); The Investment Company Act Amendments of 1995: Hearing on H.R. 1495 Before the Subcomm. on Telecommunications and Finance of the Comm. on Commerce, House of Representatives, 104th Cong. 1st Sess. (1995) (prepared statement of Marianne Smythe); *see also* American Bar Association, Section of Business Law, Committee on Federal Regulation of Securities, Task Force on Hedge Funds, Report on Section 3(c)(1) of the Investment Company Act of 1940 and Proposals to Create an Exception for Qualified Purchasers, 51 Bus. Law. 773, 779 (Dec. 5, 1995) (hereinafter Hedge Funds Task Force Report). The grandfather provision is not intended, however, to allow a sponsor of a section 3(c)(1) fund to nominally give the fund section 3(c)(7) status in order to be able to operate another section 3(c)(1) fund and thereby circumvent the 100-investor limit. Remarks of Hon. John D. Dingell, *supra; see also* section II.D of this Release.

[12] 15 USC 80a–3(c)(7)(B)(ii).

[13] *See* 142 Cong. Rec. at E1929 (Oct. 4, 1996) (Remarks of Hon. Thomas J. Bliley, Jr.).

[14] 1996 Act section 209(d)(4). Such rules are required to be prescribed by April 9, 1997. *See supra* note 9.

[15] 15 USC 80a–2(a)(51)(C).

[16] Section 2(a)(42) of the Investment Company Act [15 USC 80a-2(a)(42)] defines a voting security as any security ''presently entitling the holder thereof to vote for election of directors [of the issuer] thereof.'' *See* Thomas P. Lemke and Gerald T. Lins, *Private Investment Companies Under Section 3(c)(1)*, 44 Bus. Law. 401, 416–18 (Feb. 1989) (discussing the types of non-voting interests that have been treated as voting securities).

[17] To illustrate the operation of the current look-through provision, assume Company A is seeking to rely on the provisions of section (3)(c)(1). If one of Company A's security holders, Company B, beneficially owns 10% or more of Company A's voting securities, then the security holders of Company B would be counted as security holders of Company A (under the first 10% test), unless no more than 10% of Company B's assets consist of securities of section 3(c)(1) funds (the second 10% test).

The operation of the look-through provision also is relevant to determining who is a beneficial owner of a section 3(c)(1) fund's securities for purposes of the grandfather and the consent provisions. *See* section II.B. of this Release.

simplify the way in which the number of investors in a fund is calculated for purposes of the 100-investor limit.[18] When the relevant provisions of the 1996 Act become effective,[19] the amended look-through provision will no longer apply to a security holder that is an operating company (*i.e.*, a company that is not an investment company or a private fund).[20] This approach recognizes that an investment in a section 3(c)(1) fund by a company that is not itself an investment company generally does not implicate the concerns that the look-through provision was intended to address—that the investor may be a conduit that was created to enable a section 3(c)(1) fund to have indirectly more than 100 investors.[21]

The 1996 Act not only limits the scope of the look-through provision, but also seeks to simplify it by eliminating the second 10% test. The look-through provision will apply whenever an investment company, including a private fund, owns 10% or more of a section 3(c)(1) fund, regardless of whether or not the investment company has more than 10% of its assets invested in section 3(c)(1) funds generally. This change reflects the view that the private nature of a section 3(c)(1) fund may be brought into question when an investment company has a substantial investment in the section 3(c)(1) fund.[22]

These amendments, while attempting to simplify the look-through provision and make it more consistent with its regulatory purpose, may create interpretative issues for existing section 3(c)(1) funds that have investors to which the first, but not the second, 10% test applies. The Commission is proposing a rule to address these issues.

C. Other Directed Rulemaking

The 1996 Act directs the Commission to prescribe two sets of rules relating to private funds.[23] The 1996 Act directs the Commission to prescribe rules permitting ''knowledgeable employees'' of a private fund (or knowledgeable employees of the fund's affiliates) to invest in the fund without causing the fund to lose its exclusion from regulation under the Investment Company Act.[24] The purpose of this provision appears to be to allow private funds to offer persons who participate in the funds' management the opportunity to invest in the fund as a benefit of employment.[25]

The Commission is proposing a rule to allow directors, executive officers, general partners, and other knowledgeable employees of a section 3(c)(1) fund to invest in the fund without being counted for purposes of the fund's 100-investor limit. The proposed rule similarly would allow knowledgeable employees of a section 3(c)(7) fund to invest in the fund even though they may not meet the definition of qualified purchaser. The rule also would permit investments by knowledgeable employees of affiliates that manage the investment activities of these funds.

In addition to directing the Commission to adopt rules relating to investments by knowledgeable employees, the 1996 Act directs the Commission to prescribe rules implementing section 3(c)(1)(B) of the Act.[26] Section 3(c)(1)(B) provides that beneficial ownership of securities of a section 3(c)(1) fund by any person who acquires the securities as a result of ''a legal separation, divorce, death, or other involuntary event'' will be deemed to be beneficial ownership by the person from whom the transfer was made, pursuant to such rules and regulations as the Commission prescribes.[27] The Commission is proposing a rule to permit securities acquired by a person as a result of certain transfers to be treated as being beneficially owned by the original beneficial owner. The proposed rule would address similar transfers of securities issued by section 3(c)(7) funds.[28]

II. Rules Relating to Qualified Purchaser Funds

A. Investments

The 1996 Act provides that the term investments is to be defined by Commission rule. Section 2(a)(51)(B) of the Act also gives the Commission authority to prescribe such rules and regulations governing qualified purchasers as the Commission determines are necessary or appropriate in the public interest or for the protection of investors.

In explaining why Congress deferred to the Commission's defining what constitutes an investment for purposes of the $5 million/$25 million thresholds, the legislative history of the 1996 Act indicates that section 3(c)(7) funds are to be limited to investors with a high degree of financial sophistication who are in a position to appreciate the risks associated with investment pools that do not have the protections afforded by the Investment Company Act.[29] These investors are likely to be able to evaluate on their own behalf matters such as the level of a fund's management fees, governance provisions, transactions with affiliates, investment risk, leverage and redemption or withdrawal rights.[30] Congress appears to have expected that the definition of investments be broader than securities, but not that every asset be treated as an investment. Rather, the legislative history suggests that the asset should be held for investment purposes and that the nature of the asset should indicate a significant degree of investment experience and sophistication such that the investor can be expected to have the knowledge to evaluate the risks of investing in unregulated investment pools.[31]

Proposed rule 2a51–1 under the Investment Company Act seeks to define the term investments consistent with the principles set forth in the legislative history. The proposed rule would define investments broadly to include securities (other than controlling interests in all but certain issuers), and real estate, futures contracts, physical commodities, and cash and cash equivalents held for investment purposes. Proposed rule 2a51–1 also contains certain provisions designed to clarify how the amount of a person's investments would be determined (including investments held jointly with a spouse and investments held by certain affiliated entities). The proposed rule would permit a section 3(c)(7) fund to rely, in good faith, on certain documentation in determining a person's eligibility as a qualified purchaser.

---

[18] These changes also had been recommended by the Commission in 1992. *See* Commission Memorandum, *supra* note 3; *see also* Protecting Investors Report, *supra* note 2, at 108–09.

[19] The amendments to section 3(c)(1)(A) will become effective on the earlier of April 9, 1997 or the date on which the rulemaking defining the term investments is completed. 1996 Act section 209(e).

[20] 15 USC 80a–3(c)(1)(A).

[21] *See* Testimony of Arthur Levitt, Chairman, SEC, Concerning S. 1815, the Securities Investment Promotion Act of 1996, Before the Senate Committee on Banking, Housing and Urban Affairs (June 5, 1996).

[22] *See, e.g.*, Protecting Investors Report, *supra* note 2, at 106–09.

[23] 1996 Act section 209(d).

[24] 1996 Act section 209(d)(3). These rules are required to be promulgated no later than October 11, 1997 (1 year after enactment of the 1996 Act).

[25] *See The Investment Company Act Amendments of 1995: Hearing on H.R. 1495 before the Subcomm. on Telecommunications and Finance of the Comm. on Commerce, House of Representatives*, 104th Cong., 1st Sess. 22–23 (1995) (testimony of Barry P. Barbash, Director, Division of Management, SEC).

[26] 1996 Act section 209(d)(1).

[27] 15 USC 80a–3(c)(1)(B).

[28] *See* 15 USC 80a–3(c)(7)(A) (permitting certain transfers by qualified purchasers).

[29] *See* Senate Report, *supra* note , at 10.

[30] *Id.*

[31] The Senate Report gave family-owned businesses and personal residences as examples of assets that should not be considered to be investments. *See id.* at 10.

1. Definition of Investments

a. Securities

Proposed rule 2a51–1(b)(1) would include securities within the definition of investments. Defining investments in this way should result in a broad range of investments being treated as such for purposes of section 3(c)(7). Many investment opportunities are offered through entities that issue securities, such as limited partnerships and limited liability companies.[32]

Under the proposed rule, securities of an issuer with which the prospective qualified purchaser has a control relationship generally would not come within the definition of investments for purposes of section 3(c)(7).[33] Limiting the definition in this manner is designed to exclude, among other things, controlling ownership interests in family-owned and other closely held businesses, and controlled subsidiaries of operating companies. These holdings would appear not to demonstrate the degree of financial sophistication necessary to invest in unregulated investment vehicles or securities generally.

The proposed rule would not exclude from the definition of investments controlling ownership interests in investment companies and other issuers excepted from the definition of investment company by sections 3(c)(1) through 3(c)(9) of the Act.[34] Ownership of a controlling interest in these types of companies generally suggests a significant degree of investment experience. The proposed rule also would not exclude a controlling ownership interest in a ''listed'' company (*e.g.*, a company whose equity securities are listed on a national securities exchange, traded on the National Association of Securities Dealers Automated Quotation System (''NASDAQ'') or listed on an offshore securities exchange) that is not a majority-owned subsidiary of the prospective qualified purchaser.[35] A controlling ownership interest in a company listed on a national securities exchange or traded on NASDAQ is likely to evidence knowledge of and experience in dealing with investment risk, securities-related disclosure, corporate governance, transactions with affiliates, leverage, and other issues relevant to a person's ability to evaluate investment in a pooled investment vehicle. The proposed inclusion of securities traded on a ''designated offshore securities market'' is intended to include securities of foreign issuers that trade in an organized market that is not regulated by the Commission.

Comment is requested on the proposed exclusions from the definition of investments for certain securities. Should other controlling interests (such as controlling interests in large, but privately held, companies) be treated as investments for purposes of section 3(c)(7)?[36] In the alternative, should the listed company exception be applicable if any securities of the issuer have been offered to the public, even if periodic reports with respect to the issuer's securities are no longer required to be filed under the Securities Exchange Act of 1934 (''Exchange Act'')?[37] Should foreign securities be considered listed securities based on criteria other than, or in addition to, whether they trade on a designated offshore securities market (such as a public float requirement or a requirement that American Depositary Receipts with respect to these securities be traded in the U.S.)?

Comment also is requested whether other types of business holdings (whether or not characterized as securities) should be treated as investments. For example, should any passive ownership interest in a trade or business be considered to be an investment?[38] Finally, comment is requested whether other types of securities should be excluded from the definition of investments because they do not serve as an appropriate measure of investment experience.

b. Real Estate

Proposed rule 2a51–1(b)(2) would include real estate held for investment purposes within the definition of investments. Consistent with the examples provided by the legislative history of the 1996 Act, real estate would not be considered to be held for investment purposes if the real estate is used by the prospective qualified purchaser or a member of the prospective qualified purchaser's family (''related person'') for personal purposes (*e.g.*, as a personal residence).[39] The term ''personal purposes'' is derived from the Internal Revenue Code provision that addresses circumstances under which a taxpayer is allowed deductions with respect to certain ''dwelling units.''[40] Thus, residential property could be treated as an investment if it is not treated as a residence for tax purposes. The Commission believes that reference to the Internal Revenue Code provisions is appropriate because it would allow prospective qualified purchasers to determine whether the residential real estate is an investment based on the same provisions they would apply in

[32] For example, the term security includes any ''fractional undivided interest in oil, gas or other mineral rights.'' *See* section 2(1) of the Securities Act of 1933 (''Securities Act'') [15 USC 70a(1)].

[33] The proposed rule would exclude from the definition of investments securities of an issuer that ''controls, is controlled by, or is under common control with, the person that owns the securities.'' The term ''control'' is defined in section 2(a)(9) of the Act as ''the power to exercise a controlling influence over the management or policies of a company, unless such power is solely the result of an official position with such company.'' 15 USC 80a-2(a)(9). Section 2(a)(9) also provides that a person who owns beneficially, ''either directly or through one or more controlled companies, more than 25 per centum of the voting securities of a company shall be presumed to control such company.'' *Id.*

[34] 15 USC 80a–3(c) (1) through (9). In addition to private investment companies, sections 3(c)(1) through (9) except from the definition of investment company certain types of issuers that engage in significant investment-related activities (*i.e.*, brokers and other financial intermediaries, banks, insurance companies, and finance companies). A controlling interest in a foreign bank, foreign insurance company or structured finance vehicle also would be included as an investment, even if the issuer is not considered to be an investment company under rules 3a–6 or 3a–7 under the Act [17 CFR 270.3a–6 and 3a–7].

[35] A company would be considered to be a ''listed company'' if it has outstanding a class of equity securities that are (i) ''reporting securities'' under rule 11Aa3–1 of the Securities Exchange Act of 1934 (''Exchange Act'') [17 CFR 240.11Aa3–1] (*i.e.*, securities listed and registered, or admitted to unlisted trading privileges, on a national securities exchange or for which quotation information is disseminated in the NASDAQ and for which transaction reports are required to be made on a real-time basis pursuant to an effective transaction reporting plan) or (ii) listed on a ''designated offshore securities market'' (as such term is defined in Regulation S under the Securities Act [17 CFR 230.901 *et seq.*]).

[36] For example, a controlling interest in a company that has shareholders equity in excess of a specified amount (*e.g.*, $50 million or $100 million) could be treated as an investment on the theory that the size of the company suggests a certain level of financial sophistication on the part of the control person.

[37] *See* sections 12(b), 12(g) and 15(d) of the Exchange Act [15 USC 78*l*(b), 78*l*(g) and 78*o*(d)].

[38] A passive ownership interest could be defined for these purposes as an interest in a trade or business in which such person does not materially participate. *See* Internal Revenue Code (''IRC'') section 469(c)(1) [26 USC 469(c)(1)].

[39] Proposed rule 2a51–1(c). Proposed rule 2a51–1(a)(5) would define ''related person'' as a sibling, spouse or former spouse of the prospective qualified purchaser, or a direct lineal descendant or ancestor by birth or adoption of the prospective qualified purchaser, or a spouse of such descendant. *See also* section 2(a)(51)(A)(ii) of the Act [15 USC 80a–2(a)(51)(A)(ii)] (specifying who is considered a family member for purposes of the Family Company definition).

[40] IRC section 280A(d) [26 USC 280A(d)]. The proposed rule would treat residential real estate as an investment if it is not treated as a dwelling unit used as a residence in determining whether deductions for depreciation and other items are allowable under the IRC. Section 280A provides, among other things, that a taxpayer uses a dwelling unit during the taxable year as a residence if he or she uses such unit for personal purposes for a number of days that exceeds the greater of 14 days or 10 percent of the number days during which the unit is rented at a fair market value.

determining whether certain expenses related to the property are deductible for purposes of completing their tax returns. Comment is requested on the proposed approach. Would alternative approaches (such as not treating the property as held for investment purposes if it is used *at any time* for personal purposes) be easier to apply?

Property owned by the prospective qualified purchaser that has been used by the prospective qualified purchaser or a related person as a place of business or in connection with the conduct of a trade or business (''business-related property'') would not be considered to be held for investment purposes.[41] While business-related property may have been acquired with an investment goal in mind, these holdings may not be indicative of extensive experience in the financial or real estate markets and may have been acquired for reasons other than the potential investment merits of the property.

Comment is requested on including real estate as an investment for purposes of the proposed rule. Does real estate investing sufficiently reflect the kind of financial sophistication required to understand the risks of investing in an unregulated investment pool? Should real estate be included as an investment for purposes of the proposed rule only if the investment is in the form of a security?

c. Commodity Interests

Proposed rule 2a51–1(b)(3) would include contracts for the purchase or sale of a commodity for future delivery (''commodity interests'') held for investment purposes within the definition of investments.[42] Commodity interests are often used by investors to hedge their portfolios from declines in securities prices, changes in interest rates, or foreign currency fluctuations. Commodity interests also may provide a means to invest in the commodities markets.

Commodity interests would be included as investments to the extent of the initial margin and option premium deposited with a futures commission merchant.[43] This approach is similar to that taken by rule 4.7 under the Commodity Exchange Act, which makes available a simplified regulatory framework for private commodity pools offered to certain sophisticated investors.[44] Gains and losses on commodity interests generally would be reflected in changes in the prospective qualified purchaser's cash position (which also could be treated as an investment).[45] Comment is requested on the proposed approach to treating commodity interests. Since the value of the commodity interest generally would be reflected in the investor's cash position (including initial margin), is it necessary for the rule to include commodity interests? Would the rule be easier to apply if it explicitly provided that ''variation margin'' posted to the commodity account of the prospective qualified purchaser to reflect gains could be treated as an investment for purposes of the rule? Would another formulation for determining how to value commodity interests be more appropriate?

The proposed rule also would include in the definition of investments commodities that are held in physical form and for investment purposes.[46] This provision would recognize that many investors hold gold, silver or other commodities as part of their investment portfolios. Commodities that are used as part of a trade or business (such as grain held by a food processor as part of its inventory or raw materials) would not be considered to be investments.

Comment is requested on the proposed inclusion of commodity interests and commodities within the definition of investments. Should any other types of financial instruments, to the extent they are not addressed by the proposed rule, be included within the definition of investments?[47]

d. Cash and Cash Equivalents

Proposed rule 2a51–1(b)(5) would include cash and cash equivalents held for investment purposes (''cash'') in the definition of investments.[48] The Commission is proposing to include cash as an investment to reflect its views that many investors are likely at any given time to have a component of their investment portfolio in cash.[49] The rule would specify that the cash would have to be held by the prospective qualified purchaser for investment purposes. Thus, cash used by the prospective qualified purchaser to meet its day-to-day expenses (or, in the case of a prospective qualified purchaser that is a business, its working capital) would

[41] Proposed rule 2a51–1(c).

[42] Paragraph (a)(1) of proposed rule 2a51–1 would define commodity interests to mean commodity futures contracts, options on a commodity futures contracts, and options on physical commodities traded on or subject to the rules of (a) any contract market designated for trading such transactions under the Commodity Exchange Act (the ''CEA'') [7 USC 1 *et seq.*] and the rules thereunder; or (b) any board of trade or exchange outside the United States, as contemplated in Part 30 of the rules under the CEA. 17 CFR 30.1 through 30.11.

A futures contract generally is a bilateral agreement providing for the purchase or sale of a specified commodity at a stated time in the future for a fixed price. Robert E. Fink & Robert B. Feduniak, Futures Trading at 10 (1988). A commodity option gives its holder the right, for a specified period of time, to either buy (in the case of a call option) or sell (in the case of a put option) the subject of the option at a predetermined price. The writer (seller) of an option is obligated to sell or buy the specified commodity at the election of the option holder. 1 Philip M. Johnson & Thomas L. Hazen, Commodities Regulation at section 1.07 (2d ed. Supp. 1994) (hereinafter Johnson & Hazen).

[43] Proposed rule 2a51–1(d)(1). To enter into a futures contract or write a commodity option, a customer typically deposits with a futures commission merchant (''FCM''), as security for performance of its obligations, a specified amount of assets or cash as ''initial margin.'' Initial margin is not considered part of the contract or option price, and is returned upon termination of the position, unless used to cover a loss. Johnson & Hazen, *supra* note 42, at section 1.10.

[44] 17 CFR 4.7. In taking this approach, the Commodity Futures Trading Commission noted that ''account equity in excess of the minimum necessary for margin or option premiums is not includable because it has no necessary correlation with actual commodity interest transactions.'' *See* Exemption for Commodity Pool Operators With Respect to Offerings to Qualified Eligible Participants; Exemption for Commodity Trading Advisors With Respect to Qualified Eligible Clients, 57 FR 34853, 34855 n.17 (Aug. 7, 1992). Rule 4.7 under the CEA establishes a different threshold for securities investments ($2,000,000 market value) and commodity interests ($200,000 initial margin). Since the proposed rule would permit cash to be treated as an investment (*see* section II.A.2.d. of this Release), it would not be appropriate to incorporate this dual threshold into the proposed rule.

[45] See section II.A.1.d of this Release. An FCM must, on a daily basis, reconcile its customers' positions by crediting gains and debiting losses on a customer-by-customer basis. *See* CEA rule 1.32 [17 CFR 1.32] (requiring daily computation of customer accounts); *see also* Custody of Investment Company Assets with Futures Commission Merchants and Commodity Clearing Organizations, Investment Company Act Rel. No. 22389 (Dec. 11, 1996) [61 FR 66207 (Dec. 17, 1996)].

[46] Proposed rule 2a51–1(b)(4). Physical commodities, for purposes of the proposed rule, would be defined as any commodity with respect to which a commodity interest is traded on a domestic or foreign commodities exchange. Proposed rule 2a51–1(a)(4). This approach is designed to provide certainty on the types of commodities that would be considered investments.

[47] *See, e.g.,* section 3(c)(2) of the Act, as amended by the 1996 Act [15 USC 80a–3(c)(2)] (defining the term ''financial contract'').

[48] Cash and cash equivalents would generally be considered to include cash, bank deposits, certificates of deposit, bankers acceptances and other bank instruments. *See, e.g.,* Investment Company Act Rel. No. 10937 (Nov. 13, 1979) [44 FR 66608 (Nov. 20, 1979)]; Statement of Cash Flows, Statement of Financial Accounting Standards No. 95, at section 95.08 (Fin. Accounting Standards Bd. 1987); Treas. Reg. section 220.2 (as amended in 1996) [Fed. Sec. L. Rep. (CCH) ¶ 22,252]. The cash surrender value of an insurance policy (net of any loans) would also be considered to be a cash equivalent. Certain of the instruments that are considered to be cash equivalents (*e.g.,* shares of money market mutual funds, certain Government securities) for purposes of these sources are securities and would be treated as investments for purposes of the proposed rule.

[49] For example, an investor may have a significant amount of cash as a result of a recent sale of an investment or because market conditions resulted in the investor taking a ''defensive'' position. Cash or cash equivalents may also be integral to certain sophisticated investment strategies (such as hedging).

not be included for purposes of determining whether the prospective qualified purchaser has the requisite amount of investments.

Comment is requested on the proposed inclusion of cash as an investment. Should cash only be included if it is in excess of a certain amount (*e.g.*, $25,000)? Should the rule provide examples of when cash would be considered to be held for investment purposes (*i.e.*, if it represents proceeds from the sale of investments occurring during the preceding six months)? Should cash be included only if ''investment securities'' and other types of investments (*e.g.*, real estate) constitute more than a specified average amount or percentage of the prospective qualified purchaser's investment portfolio (*e.g.*, 25%, 50% or 75%) over the prior 12-month period?[50]

e. Request For Comment

Comment is generally requested on the proposed definition of investments. Certain assets (such as jewelry, art work, antiques, and other collectibles) that may be held by some individuals as investments are not included because they do not necessarily suggest any experience in the financial markets or investing in unregulated investment pools.[51] Should such assets be included if held for investment purposes? Should any property that produces income from interest, dividends, annuities or royalties not derived in the ordinary course of a trade or business be treated as an investment?[52] Commenters should explain how these types of investments can serve as indicia of sophistication in investment matters. Finally, should any assets that are proposed to be included within the definition of investments not be included?

2. Determining the Amount of Investments

Proposed rule 2a51–1 would allow the amount of a prospective qualified purchaser's investments to be based on either the market value of the investments or their cost. In either case, certain deductions from the amount of investments owned would have to be made as discussed below.

a. Value of Investments

Proposed rule 2a51–1(d) would specify that the value of an investment would be determined based either on its market value on a recent date or its cost.[53] A section 3(c)(7) fund could determine which methodology to use, or could allow prospective qualified purchasers to provide the amount of their investments based on either methodology. The Commission believes that this approach is appropriate because either the cost or market value of the prospective qualified purchaser's investments may provide an appropriate starting point for assessing the person's investment experience.

Comment is requested on the proposed approach to valuing investments. Should the proposed rule instead take an approach similar to that taken in rule 144A under the Securities Act, which generally requires that securities be valued at cost even if a market value is available?[54] Would that approach make it easier for a section 3(c)(7) fund to determine the continuing status of an investor as a qualified purchaser when the investor adds to its investment in the fund?[55]

b. Deductions From Amount of Investments

(i) Certain Indebtedness

The Commission believes that, in establishing the $5 million/$25 million investment thresholds, Congress intended that qualified purchasers generally be limited to persons who own a specified amount of investments. This intention would appear to be inconsistent with permitting a prospective qualified purchaser to accumulate the requisite amount of investments through leverage or similar means. As a result, the proposed rule would require that the amount of any outstanding indebtedness incurred to acquire investments owned by a prospective qualified purchaser be deducted from that person's amount of investments. This requirement would apply to all types of prospective qualified purchasers.[56]

The Commission is concerned that section 3(c)(7) funds may have difficulty in determining whether certain indebtedness was incurred to acquire investments. To address this issue, the proposed rule would require that certain indebtedness, if incurred during the preceding 12 months, be deducted from the amount of the person's investments, regardless of whether the proceeds of the indebtedness can be directly traced to the acquisition of investments. These provisions are generally applicable to natural persons and Family Companies.

The amount of any loan to a natural person secured by a mortgage on the person's personal residence or other non-investment real estate would be deducted unless the proceeds of the loan were used solely to finance the acquisition or improvement of the property or to refinance an outstanding mortgage (''real estate loans'').[57] The intent of this provision is to preclude a personal residence or a vacation home from, in effect, being converted into cash or another type of investment for purposes of meeting the $5 million threshold.[58]

Under the proposed rule, a Family Company would be required to deduct the amount of any outstanding indebtedness incurred by any of the Company's owners to acquire the investments held by the Company.[59] In addition, a Family Company would have to deduct the amount of any real estate loans that any owner of the Family Company would have had to deduct if the owner were the

[50] Section 3(a)(3) of the Act [15 USC 80a–3(a)(3)] defines the term ''investment securities'' as all securities except (A) Government securities, (B) securities issued by employees' securities companies, and (C) securities issued by majority-owned subsidiaries of the owner which are not investment companies. Upon effectiveness of the 1996 Act's amendments related to section 3(c)(7) funds, the term investment securities also will exclude majority-owned subsidiaries that are section 3(c)(1) or section 3(c)(7) funds. *See* section 209(c)(6) of the 1996 Act.

[51] *See* Hedge Funds Task Force Report, *supra* note 11, at 788 (suggesting that automobiles, jewelry and art be excluded from investments for purposes of measuring financial sophistication).

[52] *See* IRC section 163(d)(5) [26 USC 163(d)(5)] (definition of ''property held for investment'' under tax code provisions allowing a limited deduction for investment interest).

[53] In the case of a security, market value could be determined in the manner described in rule 17a–7(b) under the Investment Company Act [17 CFR 270.17a–7(b)]. In the case of other investments, other reasonable methods to ascertain market value (such as real estate appraisals by independent third parties) could be used. A prospective qualified purchaser could not use a ''fair value'' method of valuation such as that contemplated by rule 2a–4 under the Act [17 CFR 270.2a–4]. In the absence of a readily ascertainable market value, the value of an investment always would be based on its cost.

[54] *See* 17 CFR 230.144A(a)(3) (requiring securities to be valued at cost, unless a person reports its securities holdings in its financial statements on the basis of their fair market value, or no current information with respect to the cost of those securities has been published).

[55] *See* section 3(c)(7)(A) of the Investment Company Act (providing that the outstanding securities of a section 3(c)(7) fund must be owned ''exclusively by persons who, at the time of acquisition of such securities, are qualified purchasers'').

[56] Proposed rule 2a51–1(e). The proposed rule would not require the deduction to be made with respect to investments that the person manages on a discretionary basis for others.

[57] Proposed rule 2a51–1(f) (4) and (5). The proceeds of a refinancing loan would be deducted to the extent that the amount of the new loan exceeds the lowest principal amount of the refinanced loan outstanding during the preceding 12 months.

[58] This deduction would generally apply to real estate that is not held for investment purposes. Outstanding indebtedness incurred to acquire investment real estate would already have been deducted as required by proposed rule 2a51–1(e).

[59] Proposed rule 2a51–1(g)(1).

prospective qualified purchaser.[60] Finally, the proposed rule would require a Family Company to deduct (i) the amount of any indebtedness incurred by the Family Company during the preceding 12 months to the extent that the principal amount of the indebtedness exceeds the fair market value of any assets of the Family Company other than investments and (ii) the amount of any indebtedness incurred during the preceding 12 months by an owner of the Family Company or by a related person of an owner of the Family Company and guaranteed by the Family Company.[61] These provisions would provide further assurance that indebtedness incurred by the Family Company or its owners to acquire investments was appropriately deducted.

Comment is requested whether the rule should contain other provisions to clarify the extent to which indebtedness should be treated as incurred to acquire the investment. For example, should any indebtedness collateralized by the investment (whether directly or indirectly) be deemed to have been incurred to acquire the investment?

(ii) Other Payments

Prospective qualified purchasers who are natural persons would be required to deduct from the amount of their investments certain other amounts received during the preceding 12 months that could inflate the amount of their investments (particularly cash) without reflecting any investment experience. These amounts include payments received pursuant to an insurance policy; the value of any investments received by the person as a gift or bequest or pursuant to an agreement related to a legal separation or divorce; and any amount received by the person in connection with a lawsuit.[62]

(iii) Request for Comment

Comment is requested concerning the proposed approach for deducting indebtedness and other payments. Should the rule establish guidelines or presumptions concerning whether indebtedness was incurred to acquire an investment? Should other specified types of indebtedness or payments be deducted from the amount of investments?

Comment also is requested whether the 12-month period is sufficient to establish, for example, that a person who has received a $5 million bequest is sufficiently sophisticated to be treated as a qualified purchaser based on investments that may have been made with that bequest? Would a longer (*e.g.*, 24 months) or shorter (*e.g.*, six months) period be more appropriate? In lieu of, or in addition to, the 12-month period, should the rule reduce the amount of the deductions to the extent that the prospective qualified purchaser can trace the use of the proceeds of the loans or other payments to non-investment activities?

3. Jointly Held Investments

The proposed rule would clarify that, in determining whether a natural person is a qualified purchaser, there may be included in the value of such person's investments any investments held jointly with such person's spouse (''joint investments'').[63] Thus, a person who owns $3 million of investments individually and $2 million of joint investments would be a qualified purchaser. The spouse also would be a qualified purchaser if he or she owned, individually, an additional $3 million of investments. On the other hand, if each spouse owned, individually, $3 million of investments, but the spouses did not own any joint investments, neither spouse would be a qualified purchaser.[64] Comment is requested on the proposed approach to joint investments. Should spouses that hold not less than $5 million in investments in the aggregate (regardless of whether the investments are held jointly) be treated as qualified purchasers if they make a joint investment in a section 3(c)(7) fund?

4. Investments Held by Certain Corporate Affiliates

The proposed rule generally would permit a parent company in a corporate structure that is a prospective qualified purchaser to aggregate investments it owns with those owned by its wholly-owned and majority-owned subsidiaries. The investments of these affiliated entities would have to be managed under the direction of the parent company.[65] This approach appears to be an appropriate way to address, for example, holding company structures necessitated by legal, tax or other factors that may require or make advantageous the holding of investments in separate corporate entities.[66] Comment is requested whether there are other structures for holding ownership interests in investments that should be addressed by the proposed rule. Should the rule also require the subsidiary to be consolidated with the parent company under Generally Accepted Accounting Principles?[67]

5. Good Faith Reliance on Certain Documentation

The proposed rule would permit a section 3(c)(7) fund or a person acting on its behalf, when determining whether a prospective investor is a qualified purchaser, to rely upon audited financial statements, brokerage account statements and other appropriate information and certifications provided by the prospective purchaser or its representatives, as well as upon publicly available information as of a recent date.[68] Reliance on this information must be reasonable and the section 3(c)(7) fund or its representatives, after reasonable inquiry, must have no basis for believing that the information is incorrect in any material respect. Comment is requested whether rule 2a51–1 should include a list of documentation similar to that included in rule 144A under the Securities Act.[69]

B. Definitions of Beneficial Ownership

Proposed rule 2a51–2 would define the term ''beneficial owner'' for

[60] Proposed rule 2a51–1(g)(2).

[61] Proposed rule 2a51–1(g)(3) and (4).

[62] Proposed rule 2a51–1(f)(1) through (3). A Family Company would have to deduct any such payments received by the Company or by any owner of the Company. Proposed rule 2a51–1(g)(2).

[63] Proposed rule 2a51–1(h). Joint investments also would include investments in which the person shares with his or her spouse a community property or similar shared ownership interest. *Id*. In determining the amount of joint investments, the prospective qualified purchaser would have to deduct from the amount of any joint investments any amounts that the spouse would have had to deduct (*e.g.*, indebtedness incurred to acquire the investments or bequests received by the spouse). *Id*.

[64] This rule would not affect whether a spouse that is not a qualified purchaser can hold a joint interest in a section 3(c)(7) fund with his or her qualified purchaser spouse. Section 2(a)(51)(A)(i) of the Act provides that such a joint interest can be held.

[65] Proposed rule 2a51–1(i).

[66] *See, e.g.*, Resale of Restricted Securities; Changes To Method of Determining Holding Period of Restricted Securities Under Rules 144 and 145, Securities Act Rel. No. 6862 (Apr. 23, 1990) [55 FR 17933 (Apr. 30, 1990)] (describing bank holding company structures).

[67] *See* rule 144A(a)(4) under the Securities Act [17 CFR 230.144A(a)(4)].

[68] Proposed rule 2a51–1(j). The legislative history of the 1996 Act indicates that the Commission can use its rulemaking authority provided in section 2(a)(51) of the Act to ''develop reasonable care defenses when an issuer relying on the qualified purchaser exception in good faith sells securities to a purchaser that does not meet the qualified purchaser definition.'' House Report, *supra* note 3, at 53.

[69] 17 CFR 230.144A(d)(1). Rule 144A includes several non-exclusive methods for purposes of determining whether a person is a ''qualified institutional buyer.'' These methods include most recent publicly available financial statements, information filed with Federal and State regulatory authorities, and information appearing in recognized securities manuals, as well as certifications by a company's executive officers. *Id*.

purposes of the grandfather provision governing section 3(c)(1) funds that wish to convert into section 3(c)(7) funds and the consent provision governing section 3(c)(1) funds that wish to become qualified purchasers. The proposed rule also would address what types of ownership constitute ''indirect'' beneficial ownership for purposes of the consent provision.

1. The Grandfather Provision

Under the grandfather provision, a Grandfathered Fund may convert into a section 3(c)(7) fund without requiring investors that are not qualified purchasers to dispose of their interests in the fund.[70] The grandfather provision requires the Grandfathered Fund, prior to the conversion, (i) to disclose to each ''beneficial owner'' that future investors will be limited to qualified purchasers, and that ownership in the Grandfathered Fund will no longer be limited to 100 persons, and (ii) concurrently with or after the disclosure, to provide each beneficial owner with a reasonable opportunity to redeem any part or all of its interests in the fund for that beneficial owner's proportionate share of the fund's net assets.[71]

The 1996 Act directs the Commission to define the term ''beneficial owner'' for purposes of the grandfather provision. The legislative history of the 1996 Act suggests that the Commission was to use this authority to address any unnecessary burdens that might arise as a result of the application of section 3(c)(1)'s look-through provision.[72] Specifically, Congress appears not to have intended to require a Grandfathered Fund to provide the notice and redemption opportunity to security holders of its institutional investors, even when those security holders would be deemed beneficial owners of the Grandfathered Fund's voting securities under section 3(c)(1)(A).[73] Rather, the notice and redemption opportunity are generally intended to be provided only to the institutional investor, unless the institutional investor is controlled by or under common control with the Grandfathered Fund.[74]

Consistent with the purposes indicated in the legislative history of the 1996 Act, the Commission believes that the grandfather notice and redemption opportunity provisions were intended not only for the purposes described above, but for the benefit of certain persons who were deemed to be beneficial owners *prior* to the 1996 Act's amendments to the look-through provision.[75] These persons may have relied on the then-existing look-through provision as a way to limit the Grandfathered Fund's ability to sell its securities to additional investors.[76] Allowing the Grandfathered Fund to raise substantial new capital from an unlimited number of qualified purchasers could significantly alter the nature of an investment in the Grandfathered Fund.

Paragraph (a) of proposed rule 2a51–2 would provide generally that beneficial ownership is to be determined in accordance with section 3(c)(1) of the Act. Paragraph (b) of the proposed rule would provide a special rule for determining beneficial ownership of securities held by a company. Paragraph (b) would provide that securities of a Grandfathered Fund beneficially owned by a company (without giving effect to the look-through provision) are deemed to be beneficially owned by one person (the ''owning company'') unless (i) on October 11, 1996, under section 3(c)(1)(A) of the Act as then in effect, the voting securities of the Grandfathered Fund were deemed to be beneficially owned by the holders of the owning company's outstanding securities,[77] (ii) the owning company has a control relationship with the Grandfathered Fund,[78] and (iii) the owning company is itself an investment company or a private fund.[79] If these conditions do not apply, the grandfather notice and redemption opportunity would be provided to the owning company. If the conditions do apply, the grandfather notice and redemption opportunity would be provided to the owning company's security holders as the beneficial owners of the Grandfathered Fund's securities.

The intended application of the proposed rule can best be illustrated by the following example. Assume Company A is a Grandfathered Fund and that Company B, a section 3(c)(1) fund, owned more than 10% of the voting securities of Company A on October 11, 1996. If Company B does not have a control relationship with Company A, the grandfather notice and redemption opportunity can be provided directly to Company B. If a control relationship does exist, and on October 11, 1996, the security holders of Company B were deemed to be the beneficial owners of Company A's voting securities (because of the second

[70] These non-qualified purchasers must have acquired all or a portion of their investment in the Grandfathered Fund prior to September 1, 1996. Any person acquiring an interest in the Grandfathered Fund after that date must, either on the date of the acquisition or on the date that the fund avails itself of the section 3(c)(7) exception, be a qualified purchaser. These persons are required to be given the notice and redemption opportunity described below.

[71] The opportunity must be provided ''notwithstanding any agreement to the contrary between the [Grandfathered Fund] and such beneficial owner.'' 15 USC 80a–3(c)(7)(B)(ii)(II). Each person electing to redeem must receive its proportionate share of the Grandfathered Fund's net assets in cash, unless the person agrees to accept such amount in kind (*i.e.*, in assets of the Grandfathered Fund). If the Grandfathered Fund elects to provide investors with an opportunity to receive an in-kind distribution, this election must be disclosed in the grandfather disclosure.

[72] *See supra* note 17 and accompanying text (describing section 3(c)(1)(A) of the Investment Company Act).

[73] *See* Remarks of Hon. Thomas J. Bliley, *supra* note 13.

[74] *Id.*

[75] *See supra* notes 18, 22 and accompanying text (discussing the elimination of the second 10% test). Consistent with this legislative intent, the Commission believes that the conditions in the grandfather provision must be complied with by any section 3(c)(1) fund organized before the enactment of the 1996 Act that wishes to avail itself of section 3(c)(7). Thus, the notice and redemption opportunity must be provided to the beneficial owners of a Grandfathered Fund's securities, even if each beneficial owner meets the definition of qualified purchaser. If the notice and redemption opportunity provision had been intended only for the benefit of beneficial owners who are not qualified purchasers, Congress could have limited the provision accordingly. *Compare* House Report, *supra* note 3, at 51 (describing original provision in H.R. 3005, as reported by the Committee on Commerce, which limited the notice and redemption opportunity to investors that were not qualified purchasers) and Senate Report, *supra* note 3, at 23 (''The issuer must allow section 3(c)(1) fund owners 'of record' to redeem their interests in the fund in either cash or a proportionate share of the fund's assets.''); *see also supra* note 70 .

[76] This reliance can be illustrated by the following example. An investor invested in a section 3(c)(1) fund (''Fund A'') through another section 3(c)(1) fund (''Fund B'') that was subject to the look-through provision as then in effect. The investor may have made its investment in Fund B (or Fund B may have made its investment in Fund A) recognizing that under section 3(c)(1)(A) as then in effect, each security holder of Fund B was deemed to be a beneficial owner of Fund A's voting securities. In this way, the look-through provision would have limited the number of additional persons that could invest in Fund A.

[77] The applicability of the look-though provision would be determined as of October 11, 1996 to assure that the Grandfathered Fund does not engage in transactions subsequent to the enactment of the 1996 Act (which was signed by the President on that date) designed to limit the applicability of the look-through provision (such as the issuance of additional voting securities so that the percentage of voting securities owned by an owning company falls below 10%).

[78] *See supra* note (describing the Act's definition of control).

[79] Limiting the application of the look-through provision in this context to owning companies that are investment companies or private funds is consistent with amended section 3(c)(1)(A). If the owning company is not an investment company or a private fund, its security holders are unlikely to have a sufficient interest in its investment in the Grandfathered Fund to justify providing them with the grandfather notice and redemption opportunity. *See supra* note 21 and accompanying text.

10% test),[80] Company A must provide the grandfather notice and redemption opportunity to each of Company B's security holders.

Comment is requested on the proposed approach for determining beneficial ownership in the absence of a control relationship. Should Company B's security holders receive the grandfather notice and redemption opportunity if Company B owns more than 10% of Company A's voting securities? That is, should Company B's security holders receive the grandfather notice and redemption opportunity regardless of (i) Company B's status as an investment company or a private fund; (ii) the existence of a control relationship, or (iii) the applicability of the second 10% test?

Comment also is requested whether any other rules may be necessary to clarify the operation of the grandfather provision. For example, a redeeming shareholder of a Grandfathered Fund is entitled to receive its proportionate share of the Fund's ''net assets.'' The term ''current net assets'' is used in the Investment Company Act and defined by Commission rule.[81] Should the same definition apply to Grandfathered Funds, or should net assets, for purposes of the grandfather provision, be determined based upon the methods that would have been used to determine the amount that the investor would have received in accordance with existing withdrawal provisions in the Grandfathered Fund's governing documents? Are these withdrawal provisions typically subject to conditions (*e.g.*, a ''hold-back'') that would undercut the purpose of the redemption requirements of section 3(c)(7) and, if so, how could the existence of such provisions be addressed?[82]

2. The Consent Provision

The consent provision requires that a private fund that wishes to become a qualified purchaser (''purchasing fund'') obtain the consent of all of its beneficial owners that had invested in the purchasing fund prior to April 30, 1996.[83] The beneficial owners of the securities of any private fund that is a direct or indirect beneficial owner of the securities of the purchasing fund must also consent to the treatment of the purchasing fund as a qualified purchaser.[84]

The consent provision appears to be designed to give investors in an existing private fund with the opportunity to review what could be a significant change in the manner in which the fund makes investments as a result of the regulatory changes effected by the 1996 Act.[85] The consent provision also may serve to prohibit an existing section 3(c)(1) fund from avoiding the notice and redemption opportunity requirements of the grandfather provision by investing its assets in a section 3(c)(7) fund, either directly or indirectly through another private fund.[86]

Paragraph (c) of proposed rule 2a51–2 would clarify the meaning of the term ''beneficial owner'' for purposes of the consent provision. The proposed rule would provide that securities of a purchasing fund beneficially owned by a company (without giving effect to the look-through provision) are deemed to be beneficially owned by one person unless the company has a control relationship with *either* the purchasing fund or the section 3(c)(7) fund with respect to which the purchasing fund will be a qualified purchaser (''target fund''). If a control relationship exists, and the company is a private fund whose security holders were deemed to be beneficial owners of the purchasing fund on October 11, 1996, then these security holders would be deemed to be beneficial owners under the proposed rule.

As in the case of the proposed definition of beneficial owner for purposes of the grandfather provision, the proposed rule relating to the consent provision is intended to allow an institutional investor to provide the required consent even if, under the look-through provision, the security holders of the institutional investor are deemed to be beneficial owners of the purchasing fund's securities. If there is a control relationship between the purchasing fund and either the institutional investor or the target fund, and the institutional investor is a private fund whose security holders were deemed beneficial owners of the purchasing fund prior to the enactment of the 1996 Act, then the consent must be obtained from those security holders.

The proposed rule also would clarify what constitutes ''indirect'' ownership with regard to the requirement that the consent be obtained from the security holders of a private fund that is an *indirect* beneficial owner of the purchasing fund. Paragraph (d) of the proposed rule would provide that the private fund would not be considered to own the securities of the purchasing fund indirectly unless the private fund has a control relationship with either the purchasing fund or the target fund.[87]

Under the proposed rule, the purchasing fund could obtain a general consent with respect to most transactions in which it will be a qualified purchaser. Consent for specific transactions would be required only when there is a control relationship between the purchasing fund or certain of its beneficial owners and the target fund.

Comment is requested on proposed rule 2a51–2. Comment specifically is requested on the proposed approach of

[80] *See* section I.B. of this Release.

[81] *See, e.g.,* section 2(a)(32) of the Investment Company Act [15 USC 80a–2(a)(32)] (defining the term redeemable security as a ''security * * * under the terms of which the holder * * * is entitled (whether absolutely or only out of surplus) to receive approximately his proportionate share of the issuer's current net assets, or the cash equivalent thereof'') and rule 2a–4 [17 CFR 270.2a–4] (definition of current net asset value for certain purposes).

[82] For example, if a section 3(c)(1) fund's withdrawal provision provides for a hold-back to assure that sufficient assets are available to satisfy contingent liabilities, the rule could provide that the Grandfathered Fund could not avail itself of section 3(c)(7) until the hold-backs are released or the liabilities extinguished.

[83] 15 USC 2(a)(51)(C). Section 2(a)(51)(C) and the proposed rule use the term ''excepted company'' to refer to section 3(c)(1) and section 3(c)(7) funds. The inclusion of section 3(c)(7) funds in this provision was presumably designed to require the consent to be obtained by any Grandfathered Fund that wished to be a qualified purchaser.

[84] *Id.*

[85] The legislative history of the 1996 Act does not address the purpose of the consent provision.

[86] Such conduct may also raise issues under section 48(a) of the Investment Company Act [15 U.S.C. 80a–47(a)] (precluding indirect circumvention of the Act's provisions).

[87] The following example illustrates the intended operation of the proposed rule. Assume Company A is a purchasing fund and that Companies B and C are beneficial owners of Company A's voting securities. Company B is an operating company that does not have a control relationship with Company A, but whose security holders were deemed to be beneficial owners of Company A's voting securities on October 11, 1996. Company C is a private fund that was deemed to own beneficially Company A's voting securities on October 11, 1996 (in other words, the look-through provision did not apply). Each of Company C's investors (Companies D through F) are themselves private funds, but none has a control relationship with Company C or Company A.

Company B would have to consent to Company A being a qualified purchaser. Because Company B is not a private fund, Company B's shareholders would not be treated as beneficial owners of Company A's voting securities, and their consent would not be required. (The consent of Company B's shareholders would not be required even if Company B had a control relationship with Company A.)

Company C would have to consent to Company A being a qualified purchaser. Additionally, because Company C is a private fund, all beneficial owners of its outstanding securities also would have to consent to Company A being a qualified purchaser. Because there is no control relationship, however, security holders of Companies D through F would not be required to consent even if they are considered to be beneficial owners of Company C's securities under the look-through provision. Similarly, Companies D through F would not be deemed to indirectly own voting securities of Company A.

defining indirect beneficial ownership in the purchasing fund on the basis of whether the investor has a control relationship with the purchasing fund or the target fund.

C. Conforming Rule

The Commission is proposing a rule to clarify an interpretative issue concerning companies that are qualified purchasers.[88] The statutory definition of qualified purchaser specifies that a trust that is a qualified purchaser must not have been formed ''for the specific purpose of acquiring the securities offered.'' [89] The proposed rule would make the same condition applicable to any other company that is a prospective qualified purchaser (whether a Family Company or another type of company) unless each beneficial owner of the company's securities or other interest in the company is a qualified purchaser. The proposed rule would limit the possibility that a company will be able to do indirectly what it is prohibited from doing directly (*i.e.*, organize a ''qualified purchaser'' entity for the purpose of making an investment in a particular section 3(c)(7) fund available to investors that themselves did not meet the definition of qualified purchaser).[90]

D. Non-Exclusive Safe Harbor for Certain Section 3(c)(7) Funds

The legislative history of the 1996 Act indicates that the grandfather provision is not intended to allow a sponsor of an existing section 3(c)(1) fund nominally to convert that fund into a section 3(c)(7) fund in order to create another section 3(c)(1) fund and thereby avoid the 100-investor limit.[91] While the 1996 Act includes a provision allowing a sponsor to operate both a section 3(c)(1) and a section 3(c)(7) fund (the ''non-integration provision''),[92] this provision was not designed to address whether a nominally converted section 3(c)(1) fund should be treated as a section 3(c)(7) fund for purposes of the integration and other applicable provisions.[93]

Since the passage of the 1996 Act, representatives of hedge funds and other investment pools have raised concerns regarding the ability of a sponsor of a section 3(c)(1) fund that undergoes a bona fide conversion into a section 3(c)(7) fund (*i.e.*, sells its securities to new investors that are qualified purchasers) to then create a new section 3(c)(1) fund. These representatives have requested that the Commission clarify the application of the non-integration provision to sponsors of Grandfathered Funds who form new section 3(c)(1) funds. To respond to these concerns, the Commission is proposing rule 3c–7 under the Investment Company Act to provide that a Grandfathered Fund will be treated as an issuer excepted under section 3(c)(7) of the Act if, at the time the new section 3(c)(1) fund offers its securities, 25% or more of the value of all securities of the Grandfathered Fund is held by qualified purchasers that acquired these securities after October 11, 1996. The proposed rule is designed to provide a non-exclusive safe harbor for Grandfathered Funds. Comment is requested whether the percentage threshold should be higher (*e.g.*, 50%). Comment also is requested whether existing investors that are qualified purchasers on the date that the Grandfathered Fund avails itself of section 3(c)(7) should also be counted for purposes of the proposed threshold.

III. Other Rules for Private Investment Companies

A. Transition Rule for Section 3(c)(1) Funds

As noted above, the 1996 Act amended section 3(c)(1)(A) of the Investment Company Act, which governs the way a section 3(c)(1) fund calculates the number of its beneficial owners for purposes of complying with the 100-investor limit. Under amended section 3(c)(1)(A), a section 3(c)(1) fund must include among its beneficial owners the underlying security holders of any investment company and any private fund that owns 10% or more of the section 3(c)(1) fund (collectively, ''10%+ investors''). Until the amendment becomes effective, the look-through provision does not apply unless the 10%+ investor also has more than 10% of its assets invested in section 3(c)(1) funds generally. The amendment, in effect, will limit the ability of certain types of investors to own more than 10% of a section 3(c)(1) fund.[94]

The Commission is aware that some existing section 3(c)(1) funds may have 10%+ investors in reliance on the pre-amendment application of the look-through provision. The Commission believes that the amendment to the look-through provision was primarily designed to simplify the application of the provision and was not intended to disrupt existing investment relationships. The Commission, therefore, is proposing a rule under the Investment Company Act to provide that the amended look-through provision will not apply in the case of an investor that held more than 10% of the outstanding voting securities of a section 3(c)(1) fund on October 11, 1996, provided that the investor continues to satisfy the second 10% test.[95]

The Commission requests comment on the approach of the proposed rule. For example, the proposed rule would not limit additional investments by the 10%+ investors in the section 3(c)(1) fund as long as the second 10% test continues to be inapplicable. Should the rule prohibit additional investments? Should the rule only permit additional investments that do not increase the percentage of the section 3(c)(1) fund's voting securities that the 10%+ investor owns? Are there other circumstances when similar relief would be appropriate?

Comment also is requested on rule 3c–2 under the Investment Company Act, which was adopted in 1958 to facilitate capital investments by operating companies in small business investment companies (''SBICs'') that were section 3(c)(1) funds.[96] Rule 3c–2

[88] Proposed rule 2a51–3.

[89] 15 U.S.C. 80a–2(a)(51)(A)(iii).

[90] *See supra* note 86 and accompanying text.

[91] *See* Remarks of Hon. John D. Dingell, *supra* note 11.

[92] Section 3(c)(7)(E) of the Investment Company Act [15 U.S.C. 80a–3(c)(7)(E)]. The non-integration provision states, in part, that an issuer that is otherwise excepted under section 3(c)(7) and an issuer that is otherwise excepted under section 3(c)(1) is not to be treated by the Commission as being a single issuer for purposes of determining the number of beneficial owners of the section 3(c)(1) fund or whether the outstanding securities of the section 3(c)(7) fund are owned by anyone who is not a qualified purchaser.

[93] *See* Remarks of Hon. John D. Dingell, *supra* note 11. The bona fides of a conversion to a section 3(c)(7) fund also would affect the ability of the fund to use the new exemption from the prohibition in the Investment Advisers Act of 1940 (''Advisers Act'') on performance fees available to section 3(c)(7) funds. *See* new section 205(b)(4) of the Advisers Act [15 U.S.C. 80b–5(b)(4)].

[94] The limitation will exist only when an investment company or a private fund invests in a section 3(c)(1) fund. The 1996 Act expands the ability of corporate, non-investment company investors to participate in section 3(c)(1) funds by no longer requiring section 3(c)(1) funds to count the underlying shareholders of these investors under any circumstances.

[95] Proposed rule 3c–1. For the purpose of the proposed rule, investment in section 3(c)(7) funds would be included in applying the second 10% test, since a section 3(c)(7) fund probably would have been a section 3(c)(1) fund but for the new exception created by the 1996 Act. The proposed rule also would address 10%+ ownership interests that result from voting securities acquired as a result of the conversion of convertible non-voting securities acquired prior to October 11, 1996.

[96] Rule 3c–2 [17 CFR 270.3c–2]. At that time, the look-through provision did not include the second 10% test and, therefore, inhibited SBICs' capital raising efforts because SBICs frequently depended upon corporate investors to make investments that resulted in their owning more than 10% of the SBICs voting securities.

provides that beneficial ownership of 10% or more of an SBIC's voting securities by a company is deemed to be ownership by one person if and so long as that company's total investment interest in all SBICs does not exceed 5% of the value of the company's assets. The amendments to the look-through provision made by the 1996 Act will make it unnecessary for an investor in an SBIC that is itself not an investment company or a private fund to rely on rule 3c–2.[97] Comment is requested whether rule 3c–2 is still necessary.[98] To what extent do SBICs rely on registered or private investment companies as a source of capital? To assure that the flow of capital to small businesses is not inhibited, should the rule be amended to incorporate the second 10% test? Should the rule be rescinded to reflect Congress' decision to eliminate the second 10% test?

B. Investments by Fund Employees

The Commission is proposing rule 3c–5 under the Investment Company Act to permit directors, executive officers, general partners and certain knowledgeable employees of a section 3(c)(1) fund or of an affiliated person of the fund (collectively, ''fund personnel'') to acquire securities issued by the fund without being counted for purposes of section 3(c)(1)'s 100-investor limit. The rule also would permit fund personnel to invest in a section 3(c)(7) fund even though they did not meet the definition of qualified purchaser.

The provision in the 1996 Act directing Commission rulemaking with regard to investments in private funds by knowledgeable employees appears to be intended to encompass all natural persons who actively participate in the management of a fund's investments. The proposed rule, therefore, would extend to directors, executive officers, and general partners of a fund or of an affiliate of the fund that oversees the fund's investments. The proposed rule also would extend to other employees who, in connection with their regular functions or duties, participated in, or obtained information regarding, the investment activities of the fund or other investment companies managed by the affiliate for a period of at least 12 months.[99] Comment is requested whether the proposed rule should contain any other criteria for identifying knowledgeable employees (*i.e.*, the employee's salary level or the amount of investments owned).

The proposed rule would allow transfers of fund securities held by fund personnel to family members as a gift, bequest or pursuant to an agreement relating to legal separation or divorce, as well as to family trusts and similar family vehicles established by fund personnel for the exclusive benefit of family members and charitable organizations, provided fund securities had been acquired by fund personnel pursuant to, or are otherwise subject to, an arrangement prohibiting any other transfers of such shares.[100] The Commission believes that this approach would afford adequate flexibility for employees' estate planning and other financial goals, while assuring that the securities of the issuer were not transferred in a manner inconsistent with the rationale underlying sections 3(c)(1) and 3(c)(7).

The Commission recognizes that the proposed rule would not extend to employees performing certain other functions with respect to a fund, such as clerical, secretarial and other administrative personnel. Should the rule be extended to these employees (or employees of firms that provide such services) if, for example, the employees are assisted by an independent purchaser representative?[101] The Commission also requests comment whether the proposed rule should contain any other requirements, particularly with respect to investments that are made by fund personnel through plans that are subject to the Employee Retirement Income Security Act of 1974, as amended.

C. Certain Transfers

Section 3(c)(1)(B) of the Act provides that beneficial ownership of securities of a section 3(c)(1) fund by any person who acquires the securities as a result of a ''legal separation, divorce, death, or other involuntary event'' will be deemed to be beneficial ownership by the person from whom the transfer was made, pursuant to such rules and regulations as the Commission prescribes. This provision was designed to address situations in which section 3(c)(1)'s 100-investor limit is exceeded ''because of transfers which are neither within the issuer's control nor are voluntary on the part of the present beneficial owner.''[102]

The 1996 Act directed the Commission to prescribe rules to implement section 3(c)(1)(B). The Commission is proposing rule 3c–6 under the Investment Company Act to provide that beneficial ownership by a person (''transferee'') who acquired securities of a section 3(c)(1) fund pursuant to a gift, bequest, or an agreement relating to a legal separation or divorce or other involuntary event will be deemed to be beneficial ownership by the person from whom the transfer was made (''transferor''). The proposed rule would limit transferees to family members of the transferor, trusts or similar vehicles established by the transferor for the exclusive benefit of family members, and charitable organizations. The proposed rule also would provide that the securities of the section 3(c)(1) fund must have been acquired by the transferor pursuant to, or are otherwise subject to, an arrangement prohibiting any other transfers, except transfers back to the fund. The Commission believes that the proposed rule would afford sufficient flexibility to section 3(c)(1) funds and their investors consistent with the intent behind section 3(c)(1)(B).

Proposed rule 3c–6 also would address transfers of securities by qualified purchasers under section 3(c)(7)(A) of the Act. That section provides that securities of a section 3(c)(7) fund that are owned by persons who received them from a qualified purchaser as a gift or bequest, or when the transfer was caused by legal separation, divorce, death or other involuntary event, will be deemed to be owned by a qualified purchaser, subject to such rules as the Commission may prescribe. Proposed rule 3c–6 would permit transfers of securities of a section 3(c)(7) fund under essentially the same conditions as those proposed for transfers under section 3(c)(1)(B).

Comment is requested on the proposed rule governing transfers of private funds' securities. Should transfers of a section 3(c)(7) fund's securities be governed by different conditions than transfers of a section 3(c)(1) fund's securities, or be permitted in other types of situations as well?

[97] The need for SBICs to rely on rule 3c–2 may have diminished when the second 10% test was added to the look-through provision in 1980.

[98] Rule 3c–2 also provides that the look-through provision does not apply to 10%+ investors that are ''state development corporations,'' subject to certain conditions.

[99] The term ''employee'' as used in the proposed rule is intended also to encompass individuals who may be deemed independent contractors for tax purposes. *See, e.g.*, Cornish & Carey Commercial, Inc. (pub. avail. June 21, 1996).

[100] The securities could be sold back to the issuing fund or, in the case of securities issued by a section 3(c)(7) fund, other qualified purchasers.

[101] A similar concept of ''purchaser representative'' is found in Regulation D under the Securities Act that governs securities transactions exempted from registration under section 5 of that Act. *See* rule 501(h) under the Securities Act [17 CFR 230.501(h)].

[102] H.R. Rep. No. 1341, 96th Cong., 2d Sess. at 36 (1980).

Should the rule provide other examples of ''involuntary events''?

IV. General Request for Comment

Any interested persons wishing to submit written comments on the rules that are the subject of this Release, to suggest additional rules to address interpretative and other issues relating to private funds resulting from the 1996 Act, or to submit comments on other matters that might have an effect on the proposals contained in this Release, are requested to do so. In accordance with section 2(c) of the Investment Company Act, comment is requested regarding the effects of the proposed rules on efficiency, competition and capital formation.

V. Cost/Benefit Analysis

Consistent with legislative intent and the protection of investors, the proposed rules would benefit private funds and their investors in a number of ways. The proposed rules would: define certain terms necessary to effectuate the new exclusion from regulation under the Investment Company Act for section 3(c)(7) funds; enable section 3(c)(1) funds that wish to convert into section 3(c)(7) funds or become qualified purchasers to do so without being subject to unduly burdensome notice and consent requirements; enable knowledgeable employees of a private fund to invest in the fund without causing the fund to relinquish its exclusion from regulation under the Act; permit certain transfers of private fund securities; and address certain interpretative issues for private funds.

The Commission believes that the proposed rules would not impose any additional costs on private funds. Rather, the proposed rules would clarify the statutory requirements for private funds in order to reduce any unnecessary burdens without jeopardizing investor protection. Comment is requested on this cost/benefit analysis. Commenters are requested to provide views and empirical data relating to any costs and benefits associated with the proposed rules.

For purposes of making determinations required by the Small Business Regulatory Enforcement Fairness Act of 1996, the Commission is requesting information regarding the potential impact of the proposed rules on the economy on an annual basis. Commenters should provide empirical data to support their views.

VI. Summary of Regulatory Flexibility Analysis

The Commission has prepared an Initial Regulatory Flexibility Analysis (''IRFA'') in accordance with 5 USC 603 regarding proposed rules 2a51–1, 2a51–2, 2a51–3, 3c–1, 3c–5, 3c–6 and 3c–7 under the Investment Company Act. The IRFA indicates that the proposed rules would comply with the provisions of the 1996 Act directing the Commission to prescribe certain rules concerning private funds, and would address certain interpretive issues raised by the 1996 Act's amendments relating to private funds. The IRFA states that the proposed rules, among other things, are designed to assure that investors in section 3(c)(7) funds are the types of investors that Congress determined do not need the protections of the Investment Company Act. The IRFA further states that the proposed rules would give private funds greater flexibility as well as minimize certain compliance burdens imposed by the applicable provisions of the Investment Company Act.

The IRFA sets forth the statutory authority for the proposed rules. The IRFA also discusses the effect of the proposed rules on small entities that are section 3(c)(7) or section 3(c)(1) funds. For purposes of the proposed rules, small entities are those with assets of $50 million or less at the end of their most recent fiscal year. The IRFA states that the proposed rules would make possible the creation of small entities that are section 3(c)(7) funds, and would provide greater flexibility and minimize certain compliance burdens imposed by the provisions of the Investment Company Act on small entities that are section 3(c)(1) funds. It is estimated that there are approximately 600 U.S. venture capital pools that are section 3(c)(1) funds, of which about 50% may be considered small entities. The number of U.S. hedge funds has been estimated as being between 800 and 3,000. Based on a sample of 250 hedge funds, it is estimated that approximately 75% may be small entities.

The IRFA states that the proposed rules would not impose any new reporting, recordkeeping or compliance requirements, and that the Commission believes that there are no rules that duplicate, overlap or conflict with the proposed rules.

The IRFA discusses the various alternatives considered by the Commission in connection with the proposed rules that might minimize the effect on small entities, including: (a) the establishment of differing compliance or reporting requirements or timetables that take into account the resources of small entities; (b) the clarification, consolidation or simplification of compliance and reporting requirements under the rule for small entities; (c) the use of performance rather than design standards; and (d) an exemption from coverage of the rule or any part thereof, for small entities. The Commission believes that it would be inconsistent with the purposes of the Act to exempt small entities from the proposed rules or to use performance standards to specify different requirements for small entities. Different compliance or reporting requirements for small entities are not necessary because the proposed rules do not establish any new reporting, recordkeeping or compliance requirements. The Commission has determined that it is not feasible to further clarify, consolidate or simplify the proposed rules for small entities.

The IRFA includes information concerning the solicitation of comments with respect to the IRFA generally, and in particular, the number of small entities that would be affected by the proposed rules. Cost-benefit information reflected in the ''Cost/Benefit Analysis'' section of this Release also is reflected in the IRFA. A copy of the IRFA may be obtained by contacting David P. Mathews, Securities and Exchange Commission, 450 5th Street, N.W., Mail Stop 10–2, Washington, D.C. 20549.

VII. Statutory Authority

The Commission is proposing rules 2a51–1, 2a51–2, 2a51–3 and 3c–7 pursuant to the authority set forth in sections 2(a)(51)(B), 6(c) and 38(a) of the Investment Company Act [15 USC 80a–2(a)(51)(B), –6(c) and –37(a)] and sections 209(d)(2) and (4) of the 1996 Act. The Commission is proposing rule 3c–1 pursuant to the authority set forth in sections 6(c) and 38(a) of the Investment Company Act [15 USC 80a–6(c) and –37(a)]. The Commission is proposing rule 3c–5 pursuant to the authority set forth in sections 6(c) and 38(a) of the Investment Company Act [15 USC 80a–6(c) and –37(a)] and section 209(d)(3) of the 1996 Act. The Commission is proposing rule 3c–6 pursuant to the authority set forth in sections 3(c)(1), 3(c)(7), 6(c) and 38(a) of the Investment Company Act [15 USC 80a–3(c)(1), 3(c)(7), 6(c) and –37(a)] and section 209(d)(1) of the 1996 Act.

Text of Proposed Rules

List of Subjects in 17 CFR Part 270

Investment companies, Securities.

For the reasons set out in the preamble, Title 17, Chapter II of the

Code of Federal Regulations is proposed to be amended as follows:

PART 270—RULES AND REGULATIONS, INVESTMENT COMPANY ACT OF 1940

1. The authority citation for Part 270 is amended by adding the following citations to read as follows:

Authority: 15 U.S.C. 80a–1 *et seq.*, 80a–37, 80a–39 unless otherwise noted;

* * * * *

Section 270.2a51–1 is also issued under 15 U.S.C. 80a–2(a)(51)(B) and 80a–6(c), and secs. 209(d) (2) and (4), National Securities Markets Improvement Act of 1996;

Section 270.2a51–2 is also issued under 15 U.S.C. 80a–2(a)(51)(B) and 80a–6(c), and secs. 209(d) (2) and (4), National Securities Markets Improvement Act of 1996;

Section 270.2a51–3 is also issued under 15 U.S.C. 80a–2(a)(51)(B) and 80a–6(c), and secs. 209(d) (2) and (4), National Securities Markets Improvement Act of 1996;

Section 270.3c–1 is also issued under 15 U.S.C. 80a–6(c);

Section 270.3c–5 is also issued under 15 U.S.C. 80a–6(c), and sec. 209(d)(3), National Securities Markets Improvement Act of 1996;

Section 270.3c–6 is also issued under 15 U.S.C. 80a–3(c)(1), 80a–3(c)(7), 80a–6(c) and 80a–37(a) and sec. 209(d)(1), National Securities Markets Improvement Act of 1996;

Section 270.3c–7 is also issued under 15 U.S.C. 80a–2(a)(51)(B) and 80a–6(c);

* * * * *

2. Section 270.2a51–1 is added to read as follows:

§ 270.2a51–1 Definition of investments for purposes of section 2(a)(51) (definition of ''qualified purchaser''); certain calculations.

(a) *Definitions.* As used in this section:

(1) The term *Commodity Interests* shall mean commodity futures contracts, options on commodity futures contracts, and options on physical commodities traded on or subject to the rules of:

(i) Any contract market designated for trading such transactions under the Commodity Exchange Act and the rules thereunder; or

(ii) Any board of trade or exchange outside the United States, as contemplated in Part 30 of the rules under the Commodity Exchange Act [17 CFR 30];

(2) The term *Family Company* shall mean a company described in paragraph (A)(ii) of section 2(a)(51) of the Act [15 U.S.C. 80a–2(a)(51)];

(3) The term *Listed Company* shall mean a company that has outstanding a class of equity securities that are:

(i) Reported securities as such term is defined by § 240.11Aa3–1 of this Chapter; or

(ii) Listed on a ''designated offshore securities market'' as such term is defined by Regulation S under the Securities Act of 1933 [17 CFR 230.901 through 230.904];

(4) The term *Physical Commodities* shall mean any physical commodity with respect to which a Commodity Interest is traded on a market specified in paragraphs (a)(1) of this section; and

(5) The term *Related Person* shall mean a person who is related to another person as a sibling, spouse or former spouse, or is a direct lineal descendant or ancestor by birth or adoption of such person, or is a spouse of such descendant, *provided that*, in the case of a Family Company, a Related Person includes any owner of the Family Company and any person who is a Related Person of such owner.

(b) *Types of Investments.* For purposes of section 2(a)(51) of the Act [15 U.S.C. 80a–2(a)(51)], the term *investments* shall mean:

(1) Securities (as defined by section 2(1) of the Securities Act of 1933 [15 U.S.C. 70a(1)]), other than securities of an issuer that controls, is controlled by, or is under common control with, the person that owns such securities, unless the issuer is:

(i) An investment company or a company that would be an investment company but for the exclusions provided by sections 3(c)(1) through 3(c)(9) of the Act [15 U.S.C. 80a–3(c)(1) through 3(c)(9)] or the exemptions provided by §§ 270.3a–6 or 270.3a–7; or

(ii) A Listed Company that is not a majority-owned subsidiary of such person or a person that controls, is controlled by, or is under common control with such person;

(2) Real estate held for investment purposes;

(3) Commodity Interests held for investment purposes;

(4) Physical Commodities held for investment purposes; and

(5) Cash and cash equivalents held for investment purposes.

(c) *Real Estate Not Held for Investment Purposes.* For purposes of this section, real estate shall not be considered to be held for investment purposes by its owner if it is used by the owner or a Related Person of the owner for personal purposes or as a place of business, or in connection with the conduct of the trade or business of such owner or a Related Person of the owner. Residential real estate shall not be deemed to be used for personal purposes if deductions with respect to such real estate are not disallowed by section 280A of the Internal Revenue Code [26 USC 280A].

(d) *Valuation.* For purposes of determining whether a person is a qualified purchaser, the aggregate amount of investments owned and invested on a discretionary basis by such person shall be their readily ascertainable market value on the most recent practicable date or their cost, *provided that*:

(1) In the case of Commodity Interests, the amount of investments shall be the value of the initial margin or option premium deposited in connection with such Commodity Interests; and

(2) In each case, there shall be deducted from the amount of investments owned by such person the amounts specified in paragraphs (e), (f) and (g) of this section, as applicable.

(e) *Deductions: General.* In determining whether any person is a qualified purchaser there shall be deducted from the value of such person's investments the amount of any outstanding indebtedness incurred to acquire the investments owned by such person.

(f) *Deductions: Natural Persons.* In determining whether any natural person is a qualified purchaser, in addition to the amounts specified in paragraph (e) of this section there shall also be deducted from the value of such person's investments the following amounts:

(1) Any payments received by such person pursuant to an insurance policy during the preceding 12 months;

(2) The value of any investments received by such person during the preceding 12 months as a gift or bequest or pursuant to an agreement related to a legal separation or divorce;

(3) Any amount received by such person during the preceding 12 months in connection with a lawsuit (whether pursuant to a judgment or settlement agreement);

(4) The proceeds of any loan incurred during the preceding 12 months secured by a mortgage or deed of trust on such person's personal residence or other property that is not held for investment (''mortgage loan'') unless the proceeds of such loan were used solely to finance the acquisition or improvement of such residence or property; and

(5) The proceeds of any loan (''refinancing loan'') incurred during the preceding 12 months secured by a mortgage or deed of trust on such person's personal residence or other property that is not held for investment used to refinance a mortgage loan (''refinanced loan'') to the extent that the proceeds of the refinancing loan exceed the lowest principal amount of the refinanced loan outstanding during the prior 12 months.

(g) *Deductions: Family Companies.* In determining whether a Family Company is a qualified purchaser, in addition to

the amounts specified in paragraph (e) of this section, there shall also be deducted from the value of such Family Company's investments the following amounts for purposes of this section:

(1) Any outstanding indebtedness incurred by an owner of the Family Company to acquire such investments;

(2) The amounts described in paragraph (f) of this section received by the Family Company or any owner of the Family Company;

(3) The amount of any indebtedness incurred by the Family Company to the extent that the principal amount of such indebtedness exceeds the fair market value of any assets of the Family Company other than investments; and

(4) The amount of any indebtedness incurred by an owner of the Family Company or by a Related Person of an owner of the Family Company and guaranteed by the Family Company.

(h) *Joint Investments.* In determining whether a natural person is a qualified purchaser, there may be included in the value of such person's investments any investments held jointly with such person's spouse, or investments in which such person shares with such person's spouse a community property or similar shared ownership interest. There shall be deducted from the amount of any such investments any amounts specified by paragraphs (e) and (f) of this section incurred or received by such spouse.

(i) *Corporate Investments.* For purposes of determining the amount of investments owned by a corporation (''Corporation'') under section 2(a)(51)(A)(iv) of the Act [15 U.S.C. 80a–2(a)(51)(A)(iv)], there may be included investments owned by majority-owned subsidiaries of the Corporation (''Subsidiaries''), provided that the investments of the Subsidiary are managed under the direction of the Corporation.

(j) *Good Faith Reliance.* In determining whether a prospective purchaser is a qualified purchaser, an issuer or a person acting on the issuer's behalf (collectively, ''relying person'') shall be entitled to rely upon audited financial statements, brokerage account statements and other appropriate information and certifications provided by the prospective purchaser or its representatives and dated as of a recent date, or publicly available information as of a recent date, provided that such reliance is reasonable and the relying person, after reasonable inquiry, does not have any basis for believing that such information is incorrect in any material respect.

3. Section 270.2a51–2 is added to read as follows:

§ 270.2a51–2 Definitions of beneficial owner for certain purposes under sections 2(a)(51) and 3(c)(7) and determining indirect ownership interests.

(a) Except as set forth below, for purposes of sections 2(a)(51)(C) and 3(c)(7)(B)(ii) of the Act [15 U.S.C. 80a–2(a)(51)(C) and 3(c)(7)(B)(ii)], the beneficial owners of securities of an excepted investment company (as defined in section 2(a)(51)(C) of the Act [15 U.S.C. 80a–2(a)(51)(C)]) shall be determined in accordance with section 3(c)(1) of the Act [15 U.S.C. 80a–3(c)(1)].

(b) For purposes of section 3(c)(7)(B)(ii) of the Act [15 U.S.C. 80a–3(c)(7)(B)(ii)], securities of an issuer beneficially owned by a company (without giving effect to section 3(c)(1)(A) of the Act [15 U.S.C. 80a–3(c)(1)(A)]) (''owning company'') shall be deemed to be beneficially owned by one person unless:

(1) The owning company is an investment company or an excepted investment company;

(2) The owning company, directly or indirectly, controls, is controlled by, or is under common control with, the issuer; and

(3) On October 11, 1996, under section 3(c)(1)(A) of the Act as then in effect, the voting securities of the issuer were deemed to be beneficially owned by the holders of the owning company's outstanding securities (other than short-term paper), in which case, such holders shall be deemed to be beneficial owners of the issuer's outstanding voting securities.

(c) For purposes of section 2(a)(51)(C) of the Act [15 U.S.C. 80a–2(a)(51)(C)], securities of an excepted investment company beneficially owned by a company (without giving effect to section 3(c)(1)(A) of the Act [15 U.S.C. 80a–3(c)(1)(A)]) (''owning company'') shall be deemed to be beneficially owned by one person unless:

(1) The owning company is an excepted investment company;

(2) The owning company directly or indirectly controls, is controlled by, or is under common control with, the excepted investment company or the company with respect to which the excepted investment company is, or will be, a qualified purchaser; and

(3) On April 30, 1996, under section 3(c)(1)(A) of the Act as then in effect, the voting securities of the excepted investment company were deemed to be beneficially owned by the holders of the owning company's outstanding securities (other than short-term paper), in which case the holders of such excepted company's securities shall be deemed to be beneficial owners of the excepted investment company's outstanding voting securities.

(d) For purposes of section 2(a)(51)(C) of the Act [15 U.S.C. 80a–2(a)(51)(C)], an excepted investment company shall not be deemed to indirectly own the securities of an excepted investment company seeking a consent to be treated as a qualified purchaser (''qualified purchaser company'') unless such excepted investment company, directly or indirectly, controls, is controlled by, or is under common control with, the qualified purchaser company or a company with respect to which the qualified purchaser company is or will be a qualified purchaser.

Note to § 270.2a51–2. On October 11, 1996, the National Securities Markets Improvement Act of 1996 [P.L. 104–290] was signed into law. Prior to that date, section 3(c)(1)(A) of the Act provided that: (A) Beneficial ownership by a company shall be deemed to be beneficial ownership by one person, except that, if the company owns 10 per centum or more of the outstanding voting securities of the issuer, the beneficial ownership shall be deemed to be that of the holders of such company's outstanding securities (other than short-term paper) unless, as of the date of the most recent acquisition by such company of securities of that issuer, the value of all securities owned by such company of all issuers which are or would, but for the exception set forth in this subparagraph, be excluded from the definition of investment company solely by this paragraph, does not exceed 10 per centum of the value of the company's total assets. Such issuer nonetheless is deemed to be an investment company for purposes of section 12(d)(1).

4. Section 270.2a51–3 is added to read as follows:

§ 270.2a51–3 Certain companies not qualified purchasers.

For purposes of section 2(a)(51)(A) (ii) and (iv) of the Act [15 U.S.C. 80a–2(a)(51)(A)] a company shall not be deemed to be a qualified purchaser if it was formed for the specific purpose of acquiring the securities offered by a company excluded from the definition of investment company by section 3(c)(7) of the Act [15 U.S.C. 80a–3(c)(7)] unless each beneficial owner of the company's securities or other interest in the company is a qualified purchaser.

5. Section 270.3c–1 is added to read as follows:

§ 270.3c–1 Definition of beneficial ownership for certain private investment companies.

(a) As used in this section:

(1) The term *Covered Company* shall mean a company that is an investment company, a Section 3(c)(1) Company or a Section 3(c)(7) Company.

(2) The term *Section 3(c)(1) Company* shall mean a company that would be an

investment company but for the exclusion provided by section 3(c)(1) of the Act [15 U.S.C. 80a–3(c)(1)].

(3) The term *Section 3(c)(7) Company* shall mean a company that would be an investment company but for the exclusion provided by section 3(c)(7) of the Act [15 U.S.C. 80a–3(c)(7)].

(b) For purposes of section 3(c)(1)(A) of the Act [15 U.S.C. 80a–3(c)(1)(A)], beneficial ownership by a Covered Company owning 10 percent or more of the outstanding voting securities of a Section 3(c)(1) Company shall be deemed to be beneficial ownership by one person, *provided that:*

(1) On October 11, 1996, the Covered Company owned 10 percent or more of the outstanding voting securities of the Section 3(c)(1) Company or non-voting securities that, on such date and in accordance with the terms of such securities, were convertible into or exchangeable for voting securities that, if converted or exchanged on or after such date, would have constituted 10 percent or more of the outstanding voting securities of the Section 3(c)(1) Company; and

(2) On the date of any acquisition of securities of the Section 3(c)(1) Company by the Covered Company, the value of all securities owned by the Covered Company of all issuers that are Section 3(c)(1) or Section 3(c)(7) Companies does not exceed 10 percent of the value of the Covered Company's total assets.

6. Section 270.3c–5 is added to read as follows:

§ 270.3c–5 Beneficial ownership by knowledgeable employees and certain other persons.

(a) As used in this section:

(1) The term *Covered Company* shall mean a company that is an investment company, a Section 3(c)(1) Company or a Section 3(c)(7) Company.

(2) The term *Executive Officer* shall mean the president, any vice president in charge of a principal business unit, division or function (such as sales, administration or finance), any other officer who performs a policy-making function, or any other person who performs similar policy-making functions for a Covered Company.

(3) The term *Knowledgeable Employee* with respect to any Covered Company shall mean any natural person who is:

(i) An Executive Officer, director, or general partner of the Covered Company or of an affiliated person of such Covered Company that manages the investment activities of such Covered Company; or

(ii) An employee of the Covered Company or of an affiliated person of such Covered Company that manages the investment activities of such Covered Company (other than an employee performing solely clerical, secretarial or administrative functions with regard to such company or its investments) who, in connection with his or her regular functions or duties, participates in, or obtains information regarding, the investment activities of such Covered Company or other investment companies the investment activities of which are managed by such affiliated person, *provided that* such employee has been performing such functions and duties for or on behalf of the Covered Company or the affiliated person of the Covered Company for at least 12 months.

(4) The term *Related Person* shall mean a person who:

(i) Is related to another person as a sibling, spouse or former spouse; or

(ii) Is a direct lineal descendant or ancestor by birth or adoption of such person, or is a spouse of such descendant.

(5) The term *Section 3(c)(7) Company* shall mean a company that would be an investment company but for the exclusion provided by section 3(c)(7) of the Act [15 U.S.C. 80a–3(c)(7)].

(6) The term *Section 3(c)(1) Company* shall mean a company that would be an investment company but for the exclusion provided by section 3(c)(1) of the Act [15 U.S.C. 80a–3(c)(1)].

(b) For purposes of determining the number of beneficial owners of a Section 3(c)(1) Company, and whether the outstanding securities of a Section 3(c)(7) Company are owned exclusively by qualified purchasers, there shall be excluded securities beneficially owned by a Knowledgeable Employee of such Company; an estate of such Knowledgeable Employee; a Related Person of such Knowledgeable Employee who acquired such securities as a gift, bequest or pursuant to an agreement relating to a legal separation or divorce; or a company established by the Knowledgeable Employee exclusively for the benefit of (or owned exclusively by) the Knowledgeable Employee, his or her estate, and his or her Related Persons or charitable organizations, *provided, however,* that in each case such securities shall have been acquired by the Knowledgeable Employee pursuant to, or shall otherwise be subject to, an arrangement that prohibits the transfer, pledge or hypothecation of such securities, or any interest in such securities, to any person other than the Covered Company, such estate, such Related Persons, such companies or, if the Covered Company is a Section 3(c)(7) Company, qualified purchasers.

7. Section 270.3c–6 is added to read as follows:

§ 270.3c–6 Certain transfers of interests in section 3(c)(1) and section 3(c)(7) funds.

(a) As used in this section:

(1) The term *Related Person* shall mean a person who is:

(i) Related to another person as a sibling, spouse or former spouse; or

(ii) A direct lineal descendant or ancestor by birth or adoption of such person, or is a spouse of such descendant.

(2) The term *Section 3(c)(7) Company* shall mean a company that would be an investment company but for the exclusion provided by section 3(c)(7) of the Act [15 U.S.C. 80a–3(c)(7)].

(3) The term *Section 3(c)(1) Company* shall mean a company that would be an investment company but for the exclusion provided by section 3(c)(1) of the Act [15 U.S.C. 80a–3(c)(1)].

(4) The term *Transferee* shall mean a Section 3(c)(1) Transferee or a Qualified Purchaser Transferee in each case as defined in paragraph (b) of this section.

(5) The term *Transferor* shall mean a Section 3(c)(1) Transferor or a Qualified Purchaser Transferor in each case as defined in paragraph (b) of this section.

(b) Beneficial ownership by any person (''Section 3(c)(1) Transferee'') who acquires securities or interests in securities of a Section 3(c)(1) Company shall be deemed to be beneficial ownership by the person from whom such transfer was made (''Section 3(c)(1) Transferor''), and securities of a Section 3(c)(7) Company that are owned by persons who received the securities from a qualified purchaser (''Qualified Purchaser Transferor'') shall be deemed to be owned by a qualified purchaser (''Qualified Purchaser Transferee''), *provided that:*

(1) The transfer was made as a gift or bequest, or pursuant to an agreement relating to a legal separation or divorce or as a result of another involuntary event;

(2) The Transferee is:

(i) The estate of the Transferor;

(ii) A Related Person of the Transferor; or

(iii) A company established by the Transferor exclusively for the benefit of (or owned exclusively by) his or her estate, Related Persons or charitable organizations; and

(3) The securities shall have been acquired by the Transferor pursuant to, or shall otherwise be subject to, an arrangement that prohibits the transfer, pledge or hypothecation of such securities, or any interest in such

securities, to any person other than the Company that issued the securities, the Transferor's estate, such Related Persons or such companies or, in the case of a Qualified Purchaser Transferor, qualified purchasers.

8. Section 270.3c–7 is added to read as follows:

§ 270.3c–7 Non-exclusive safe harbor for certain section 3(c)(7) funds.

An issuer relying on section 3(c)(7)(B) of the Act [15 U.S.C. 80a–3(c)(7)(B)] shall be deemed to be excluded under section 3(c)(7) of the Act [15 U.S.C. 80a–3(c)(7)] if 25% or more of the value of the issuer's securities is held by qualified purchasers that acquired these securities after October 11, 1996.

Dated: December 18, 1996.

By the Commission.

Margaret H. McFarland,

Deputy Secretary.

[FR Doc. 96–32652 Filed 12–24–96; 8:45 am]

BILLING CODE 8010–01–P

Reader Aids

Federal Register

Vol. 61, No. 249

Thursday, December 26, 1996

CUSTOMER SERVICE AND INFORMATION

Federal Register/Code of Federal Regulations

General Information, indexes and other finding aids **202–523–5227**

Laws

For additional information **523–5227**

Presidential Documents

Executive orders and proclamations **523–5227**

The United States Government Manual **523–5227**

Other Services

Electronic and on-line services (voice) **523–4534**

Privacy Act Compilation **523–3187**

TDD for the hearing impaired **523–5229**

ELECTRONIC BULLETIN BOARD

Free Electronic Bulletin Board service for Public Law numbers, Federal Register finding aids, and list of documents on public inspection. **202–275–0920**

FAX-ON-DEMAND

You may access our Fax-On-Demand service. You only need a fax machine and there is no charge for the service except for long distance telephone charges the user may incur. The list of documents on public inspection and the daily Federal Register's table of contents are available using this service. The document numbers are 7050-Public Inspection list and 7051-Table of Contents list. The public inspection list will be updated immediately for documents filed on an emergency basis.

NOTE: YOU WILL ONLY GET A LISTING OF DOCUMENTS ON FILE AND NOT THE ACTUAL DOCUMENT. Documents on public inspection may be viewed and copied in our office located at 800 North Capitol Street, N.W., Suite 700. The Fax-On-Demand telephone number is: **301–713–6905**

FEDERAL REGISTER PAGES AND DATES, DECEMBER

63691–64006 2
64007–64244 3
64245–64440 4
64441–64600 5
64601–64814 6
64815–64958 9
64959–65146 10
65147–65316 11
65317–65456 12
65457–65938 13
65939–66186 16
66187–66532 17
66533–66866 18
66867–67178 19
67179–67446 20
67447–67686 23
67687–67926 24
67927–68116 26

CFR PARTS AFFECTED DURING DECEMBER

At the end of each month, the Office of the Federal Register publishes separately a List of CFR Sections Affected (LSA), which lists parts and sections affected by documents published since the revision date of each title.

1 CFR

462 63944

3 CFR

Proclamations:
6959 63691
6960 64245
6961 64431
6962 64581
6963 64957
6964 65455
6965 66865

Executive Orders:
11958 (amended by EO 13030) 66187
12163 (amended by EO 13030) 66187
12757 (amended by EO 13028) 64589
12884 (amended by EO 13030) 66187
12844 (amended by EO 13031) 66529
13028 64589
13029 64591
13030 66187
13031 66529

Administrative Orders:
Memorandums:
November 20, 1996 64247
November 21, 1996 64249
November 28, 1996 64439
Presidential Determinations:
No. 97–6 of November 26, 1996 63693
No. 97–7 of November 26, 1996 63695
No. 97–8 of November 27, 1996 65147
No. 97–9 of December 2, 1996 65149
No. 97–10 of December 3, 1996 65151

5 CFR

410 66189
532 67447
581 67378
630 64441
890 64441
2640 66830
Ch. LXXI 65457

Proposed Rules:
213 63762
334 65189
831 66948
1305 66232

7 CFR

52 67179
58 67447
301 65459
400 65153
500 65302
651 66867
723 63697
760 64601
868 66533
905 64251
906 64253
911 64255
920 64959
944 64251
955 67179
981 64601
989 64454
1075 67927
1464 63697
1710 66867
1714 66867
1717 66867
1786 66867
1806 63928
1910 63928
1922 63928
1924 65153
1942 65153
1944 63928
1948 65153
1951 63928
1955 63928
1956 63928
1965 63928
1980 .....65153, 67499
3550 .....63928, 65266
4279 67624
4287 67624

Proposed Rules:
273 66233
980 67499
987 64638
1079 65366
1205 64640
1470 65485

9 CFR

77 67928
113 67929
381 66198
391 65459

Proposed Rules:
317 65490
381 65490

10 CFR

20 65120
21 65157
50 65157
51 66537
52 65157
54 65157
60 64257
100 65157
960 66158

1021 64603
Proposed Rules:
50 65190
61 67501
431 64948
835 67600

12 CFR

1 63972
7 63972
8 63700
12 63958
23 66554
226 65317
263 65317
327 ....64609, 64960, 67687
506 65177
543 64007
544 64007
545 ....64007, 66561
552 64007
556 64007
559 66561
560 66561
561 65177
563 ....65177, 66561
563d 65177
567 66561
571 66561
574 65177
600 67181
603 67181
611 67181
614 67181
615 ....67181, 67188
618 67181
619 67181
575 64007
902 64613
910 64021
912 64021
1511 66874
Proposed Rules:
207 67503
220 67503
221 67503
344 67729

13 CFR

Proposed Rules:
121 65492

14 CFR

71 ....67698, 67699, 67700
95 67000
97 ....67703, 67704, 67706
Proposed Rules:
13 67444
25 ....63952, 65460
39 ....63702, 63704, 63706, 63707, 64270, 64456, 64948, 64985, 66201, 66878, 66880, 66881, 66884, 66885, 66887, 66889, 66890, 66892, 66896, 66898, 66900, 67195, 67503, 67505, 67506, 67965
71 ....64459, 65318, 65939, 66579, 66902, 66910, 66911, 66912, 67739, 67967
73 64458
91 66182
97 ....64459, 64460, 64462
107 64242
108 64242
Proposed Rules:
Ch. I 65190
39 ....64489, 64491, 64492, 64643, 64645, 65001, 65002. 65004, 65006, 65367, 65369, 65492, 65494, 66238
71 ....64826, 65992, 65993, 65994, 65995, 66620
73 ....64494, 64495
91 65191
121 ....65142, 65191
127 65191
135 ....65142, 65191

15 CFR

30 65319
732 64272
734 65462
736 64272
740 ....64272, 65462, 67448
742 ....64272, 65462
744 64272
746 64272
748 64272
750 64272
752 64272
758 64272
762 65462
770 ....64272, 67448
774 ....65462, 67448
902 66077
922 66913
2301 64948
Proposed Rules:
39 63762
71 ....63764, 63765, 63766, 63767, 63768
135 64230

16 CFR

260 67109
301 67708
1507 67197
Proposed Rules:
300 67739
301 67748
1508 65996
1509 65996

17 CFR

4 65940
30 64985
230 67200
232 67200
239 67200
240 63709
270 66207
Proposed Rules:
1 66241
Ch. II 65191
145 66949
147 66949
200 65440
228 65440
229 65440
230 ....65440, 66621
232 65440
239 ....65440, 66621
240 65440
249 65440
270 ....66621, 68100
274 66621

18 CFR

Proposed Rules:
4 64031
375 64031

19 CFR

Proposed Rules:
122 64041

20 CFR

404 64615
416 67203
498 65467

21 CFR

73 64027
Ch. 1 67710
101 67451
172 65941
178 ....64989, 65943, 65943, 66918
355 65944
510 ....63710, 66580
520 ....63711, 66580, 66581, 67452
522 ....66581, 66582
524 63712
556 ....66582, 67453
558 ....66583, 67713
606 66919
610 66919
880 64616
884 67713
Proposed Rules:
101 67243
351 66953
812 66954
892 63769
1301 66637
1304 66637

22 CFR

210 65946
605 64286

23 CFR

450 67166
500 67166
626 67166
668 67207

24 CFR

5 64617
81 63944
206 67930
888 66132
Proposed Rules:
92 65298
242 64414
985 63930

25 CFR

10 65473
Ch. VII 67931
1200 67931

26 CFR

1 ....65319, 65321, 65323, 65946, 66212, 66584, 67212, 67454, 67715, 67936
18 67454
48 66215
301 ....65319, 66216, 66217, 66218, 66584, 67458
602 ....65321, 65323, 65946, 66584, 67454 67458, 67715
Proposed Rules:
1 ....65371, 66000, 67259, 67508, 67510, 67512, 67752
48 66246

27 CFR

9 67463

28 CFR

14 66220
16 65179
31 65132
513 64950
522 64953
Proposed Rules:
540 64954

29 CFR

101 65180
102 ....65180, 65182, 65323
402 67942
403 67942
404 67942
405 67942
406 67942
408 67942
409 67942
1952 66593
4000 67942
4001 63988
4011 65473
4022 ....65473, 67942
4041 67942
4043 63988
4044 ....65474, 65476
4065 63988
Proposed Rules:
1926 66002
2704 66961
4007 66247

30 CFR

917 66220
936 67213
943 67216
Proposed Rules:
56 66348
57 66348
62 66348
70 66348
71 66348
250 ....66639, 66966
290 67515
870 64220
915 67967

31 CFR

Ch. V 64289
596 67943
Proposed Rules:
103 67260

32 CFR

269 67944
318 63712
706 67726

33 CFR

100 ....64991, 64993, 64994, 65332, 67946
110 63715
117 ....64995, 67947
157 64618
165 67948
334 64996
Proposed Rules:
100 64645
117 67970
165 67971
334 67265

34 CFR

86 66225

Proposed Rules:

668 66854

36 CFR

223 64815

Proposed Rules:

223 64569
242 67274
1190 64832
1191 64832

37 CFR

1 64027
251 63715
252 63715
257 63715
259 63715

Proposed Rules:

202 64042

38 CFR

3 67949
17 63719

39 CFR

111 ....61618, 67218

Proposed Rules:

3001 67760

40 CFR

9 ....66226, 67950
39 64290
52 ....64028, 64029, 64291, 65955, 66602, 66606, 66607, 66609, 67232, 67229, 67466, 67469
61 64463
63 ....64463, 64572, 65334, 66226
70 ....63928, 64463, 64622
76 67112
81 64294
82 64424
131 64816,65183
180 ....63721, 67472
271 67474
300 ....65186, 65957, 67233, 67234, 67655
435 66086
712 65186
716 65186
721 63726

Proposed Rules:

22 65268
50 ....65496, 65638, 65716, 67763
51 ....65752, 65764, 67274
52 ....64042, 64304, 64307, 64308, 64647, 65504, 66003, 66642, 67275, 67515. 67516
53 65780
55 66003
58 65780
70 ....64042, 64651
81 64308
82 64045
117 65268
122 65268
123 65268
124 65268
125 65268
132 66007
144 65268
270 65268
271 65268
300 ....67677, 67975
799 67516

41 CFR

Ch. 301 65635
105–70 67234
301 67951
301–1 64997
301–7 64997
301–8 64997
301–11 64997
301–17 64997

42 CFR

57 65477
401 63740
403 63740
405 63740
411 63740
412 66919
413 ....63740, 66919
447 63740
489 66919
493 63740

43 CFR

426 66754
427 66754

Proposed Rules:

418 64832
426 66827
1810 67517
2200 64658
2210 64658
2240 64658
2250 64658
2270 64658
2800 66008
2920 66008
4100 66008
4300 66008
4700 66008
5460 66008
5510 66008
6300 66968
8200 66008
8340 66008
8350 66008
8360 66008
8370 66008
8560 ....66008, 66968
9210 66008
9260 66008

44 CFR

65 ....66923, 66925
67 66926

Proposed Rules:

67 66974

45 CFR

301 67235
302 67235
303 67235
304 67235
306 67235
307 67235
801 64998
1610 63749
1617 63754
1632 63755
1633 63756

46 CFR

16 66612
31 64618
35 64618
125 66613
501 66616
502 66616
504 66616
514 66616
552 66616
560 66616
572 64822

Proposed Rules:

10 66642
15 66642
384 67764

47 CFR

1 ....63758, 66931
2 63758
15 63758
20 66931
24 63758
51 66931
61 65336
64 65341
68 65341
69 65341
73 ....63759, 64999, 65478, 66228, 66229, 66618, 67727, 67728
90 66931
97 63758

Proposed Rules:

Ch. I 63774, 63778
0 67978
1 ....64045, 67978
21 67275
73 ....63809, 63810, 63811, 64309, 64660, 65008, 65192, 65508, 65509, 66248, 66249, 66250, 66978, 66987, 67274, 67765
76 67275

48 CFR

Ch. 1 ....67408, 67430
1 ....67409, 67430
4 ....67411, 67412, 67430
9 67409
12 ....67418, 67430
14 67409
16 67418
19 ....67409, 67419, 67420, 67422, 67430
22 67409
31 ....67422, 67423, 67424, 67430
33 67409
46 ....67425, 67430
52 ....67409, 67412, 67418, 67420, 67425, 67430
53 ....67412, 67419, 67426
231 ....64635, 65478
249 ....64636, 67952
252 ....64636, 67952
1843 64823
1852 64823
6104 67241

Proposed Rules:

15 65306
42 65306
46 65306
47 65306
52 65306
1819 66643
1834 66643
1845 66643
1852 66643
1870 66643

49 CFR

Ch. I 65479, 65480
1 ....64029, 67476, 67953
106 64030
171 65958
190 64030
199 65364
214 65959
219 67477
225 67477
367 64295
531 67491
571 ....64297, 65187
572 67952
613 67166
614 67166
653 67962
654 67962
659 67492
1002 66229
1039 66230
1105 67876
1152 67876

Proposed Rules:

383 66250
391 66250
531 67518
571 ....65510, 66992
1312 67291
Ch. XI 64849

50 CFR

17 ....64475, 64481, 67493
217 66933
227 66933
285 66618
622 ....64485, 65481, 65983
630 64486
648 ....64999, 67497
679 ....63759, 64298, 64299, 64487, 64569, 65985, 65989, 67962

Proposed Rules:

17 64496
23 67293
100 67274
285 63812
622 ....66008, 67274, 67766
630 63812
644 63812
648 ....64046, 64307, 64852, 64854, 65192, 66646, 67521
656 64497
678 ....63812, 67274
679 ....63812, 63814, 64047, 64310, 57524, 67990

REMINDERS

The items in this list were editorially compiled as an aid to Federal Register users. Inclusion or exclusion from this list has no legal significance.

RULES GOING INTO EFFECT TODAY

AGRICULTURE DEPARTMENT

Agricultural Marketing Service

Oranges and grapefruit grown in Texas; published 11-25-96

AGRICULTURE DEPARTMENT

Animal and Plant Health Inspection Service

Interstate transportation of animals and animal products (quarantine):

Tuberculosis in cattle and bison--

State and area classifications; published 12-26-96

AGRICULTURE DEPARTMENT

Food and Consumer Service

Food stamp program:

Alaska, Northern Mariana Islands, Puerto Rico, and demonstration projects; Federal regulatory reform; published 11-26-96

COMMERCE DEPARTMENT

National Oceanic and Atmospheric Administration

Fishery conservation and management:

Northeastern United States fisheries--

Atlantic surf clam and ocean quahog; published 11-26-96

DEFENSE DEPARTMENT

Acquisition regulations:

Contract termination, solicitation, and clauses; published 12-26-96

ENVIRONMENTAL PROTECTION AGENCY

Reporting and recordkeeping requirements; published 12-26-96

HOUSING AND URBAN DEVELOPMENT DEPARTMENT

Mortgage and loan insurance programs:

Single family and multifamily housing, and health care facility mortgage programs--

Single-family components; Federal regulatory reform; published 11-26-96

INTERIOR DEPARTMENT

Land Management Bureau

Range management:

Grazing administration--

Fallback standards and guidelines; implementation postponement; published 11-25-96

INTERIOR DEPARTMENT

Minerals Management Service

Outer Continental Shelf; oil, gas, and sulphur operations:

Incorporations by reference; amendments; published 11-26-96

JUSTICE DEPARTMENT

Immigration and Naturalization Service

Immigration:

Status adjustment for persons admitted for permanent residence; interview waiver; published 11-25-96

LABOR DEPARTMENT

Labor-Management Standards Office

Labor organizations administrative practices and financial transactions; reporting and disclosure of information on computer-generated formats for reports; published 12-26-96

LABOR DEPARTMENT

Mine Safety and Health Administration

Metal and nonmetal mine safety and health:

First aid safety standards; published 9-26-96

TRANSPORTATION DEPARTMENT

Coast Guard

Drawbridge operations:

Florida; published 12-26-96

TRANSPORTATION DEPARTMENT

Organization, functions, and authority delegations:

Commandant, United States Coast Guard; published 12-26-96

TRANSPORTATION DEPARTMENT

Federal Aviation Administration

Airworthiness directives:

de Havilland; published 11-20-96

Allied Signal Commercial Avionics Systems; published 11-20-96

TREASURY DEPARTMENT

Internal Revenue Service

Income taxes:

Partnerships; distribution of marketable securities; published 12-26-96

VETERANS AFFAIRS DEPARTMENT

Adjucication; pensions, compensation, dependancy, etc.:

Miscellaneous amendments; published 12-26-96

COMMENTS DUE NEXT WEEK

AGRICULTURE DEPARTMENT

Agricultural Marketing Service

Tomatoes grown in--

Florida; comments due by 12-30-96; published 11-29-96

Walnuts grown in--

California; comments due by 12-30-96; published 11-29-96

AGRICULTURE DEPARTMENT

Animal and Plant Health Inspection Service

Exportation and importation of animals and animal products:

Ruminants and swine from countries where foot-and-mouth disease or rinderpest exists; zoological park quarantine; comments due by 12-30-96; published 10-31-96

Interstate transportation of animals and animal products (quarantine):

Brucellosis in cattle and bison--

State and area classifications; comments due by 12-30-96; published 10-31-96

Livestock market approval for cattle, bison, horses and swine; hog cholera obsolete regulations removed; comments due by 12-30-96; published 10-31-96

AGRICULTURE DEPARTMENT

Commodity Credit Corporation

Export programs:

Supplier credit guarantee program; comments due by 12-30-96; published 7-1-96

AGRICULTURE DEPARTMENT

Federal Crop Insurance Corporation

Administrative regulations:

Federal Crop Insurance Act-

Procedures for determining eligibility for program participation; comments due by 12-30-96; published 10-31-96

COMMERCE DEPARTMENT

National Oceanic and Atmospheric Administration

Fishery conservation and management:

Alaska; fisheries of Exclusive Economic Zone-

Gulf of Alaska groundfish; comments due by 12-30-96; published 12-4-96

Gulf of Mexico and South Atlantic coastal migratory pelagic resources; comments due by 12-31-96; published 12-16-96

ENERGY DEPARTMENT

Contract appeals:

Organization, functions and authorities overview; comments due by 12-30-96; published 10-30-96

ENVIRONMENTAL PROTECTION AGENCY

Air pollutants, hazardous; national emission standards:

Aerospace manufacturing and rework facilities; comments due by 12-30-96; published 10-29-96

Air quality implementation plans; approval and promulgation; various States:

North Dakota et al.; correction; comments due by 12-30-96; published 11-29-96

Superfund program:

Toxic chemical release reporting; community right-to-know--

Chemical use; comments due by 12-30-96; published 10-1-96

Water pollution control:

Water quality standards--

Idaho human health criteria for arsenic; comments due by 12-30-96; published 11-29-96

FEDERAL COMMUNICATIONS COMMISSION

Radio stations; table of assignments:

Illinois; comments due by 12-30-96; published 11-26-96

South Dakota; comments due by 12-30-96; published 11-26-96
Wyoming; comments due by 12-30-96; published 11-26-96

HEALTH AND HUMAN SERVICES DEPARTMENT

Food and Drug Administration

Food additives:
Polymers--
1,2-benzisothiazolin-3; comments due by 12-30-96; published 11-29-96

INTERIOR DEPARTMENT

Fish and Wildlife Service

Alaska National Wildlife Refuges:
Administration of special use permits; comments due by 12-31-96; published 11-1-96

SMALL BUSINESS ADMINISTRATION

Business loan policy:
Sale of unguaranteed portion of loan; comments due by 12-30-96; published 11-29-96

TRANSPORTATION DEPARTMENT

Coast Guard

Merchant marine officers and seamen:
Marine licensing, registry certification, and merchant mariner documentation; user fees; comments due by 12-30-96; published 10-31-96

TRANSPORTATION DEPARTMENT

Federal Aviation Administration

Air carrier certification and operations:
Digital flight data recorder upgrade requirements; comments due by 12-30-96; published 12-10-96
Airworthiness directives:
Beech; comments due by 12-30-96; published 10-23-96
Boeing; comments due by 12-30-96; published 11-18-96
Jetstream; comments due by 12-30-96; published 11-20-96
McDonnell Douglas; comments due by 12-30-96; published 11-20-96
Schweizer; comments due by 12-30-96; published 10-30-96
Class E airspace; comments due by 12-31-96; published 11-8-96

TRANSPORTATION DEPARTMENT

Research and Special Programs Administration

Pipeline safety:
Onshore oil pipeline response plans; hearing; comments due by 12-31-96; published 11-29-96

TREASURY DEPARTMENT

Internal Revenue Service

Income taxes:
Financial Asset Securitization Investment Trusts; comments due by 12-31-96; published 11-4-96

VETERANS AFFAIRS DEPARTMENT

Medical benefits:
Medical care for survivors and dependents of veterans; comments due by 12-31-96; published 11-1-96