4–8–97
Vol. 62 No. 67
Pages 16659–17040

federal register

Tuesday
April 8, 1997

Briefings on how to use the Federal Register
For information on briefings in Washington, DC, see announcement on the inside cover of this issue.
For information on briefings in Kansas City and Independence, MO, Long Beach and San Francisco, CA, and Anchorage, AK, see the announcement in Reader Aids.

Now Available Online

Code of Federal Regulations

via

GPO Access

(Selected Volumes)

Free, easy, online access to selected *Code of Federal Regulations (CFR)* volumes is now available via *GPO Access*, a service of the United States Government Printing Office (GPO). *CFR* titles will be added to *GPO Access* incrementally throughout calendar years 1996 and 1997 until a complete set is available. GPO is taking steps so that the online and printed versions of the *CFR* will be released concurrently.

The *CFR* and *Federal Register* on *GPO Access*, are the official online editions authorized by the Administrative Committee of the Federal Register.

New titles and/or volumes will be added to this online service as they become available.

http://www.access.gpo.gov/nara/cfr

For additional information on ***GPO Access*** products, services and access methods, see page II or contact the *GPO Access* User Support Team via:

★ Phone: toll-free: 1-888-293-6498

★ Email: gpoaccess@gpo.gov

FEDERAL REGISTER Published daily, Monday through Friday, (not published on Saturdays, Sundays, or on official holidays), by the Office of the Federal Register, National Archives and Records Administration, Washington, DC 20408, under the Federal Register Act (49 Stat. 500, as amended; 44 U.S.C. Ch. 15) and the regulations of the Administrative Committee of the Federal Register (1 CFR Ch. I). Distribution is made only by the Superintendent of Documents, U.S. Government Printing Office, Washington, DC 20402.

The Federal Register provides a uniform system for making available to the public regulations and legal notices issued by Federal agencies. These include Presidential proclamations and Executive Orders and Federal agency documents having general applicability and legal effect, documents required to be published by act of Congress and other Federal agency documents of public interest. Documents are on file for public inspection in the Office of the Federal Register the day before they are published, unless earlier filing is requested by the issuing agency.

The seal of the National Archives and Records Administration authenticates this issue of the Federal Register as the official serial publication established under the Federal Register Act. 44 U.S.C. 1507 provides that the contents of the **Federal Register** shall be judicially noticed.

The Federal Register is published in paper, 24x microfiche and as an online database through *GPO Access*, a service of the U.S. Government Printing Office. The online edition of the **Federal Register** on *GPO Access* is issued under the authority of the Administrative Committee of the Federal Register as the official legal equivalent of the paper and microfiche editions. The online database is updated by 6 a.m. each day the **Federal Register** is published. The database includes both text and graphics from Volume 59, Number 1 (January 2, 1994) forward. Free public access is available on a Wide Area Information Server (WAIS) through the Internet and via asynchronous dial-in. Internet users can access the database by using the World Wide Web; the Superintendent of Documents home page address is http://www.access.gpo.gov/su__docs/, by using local WAIS client software, or by telnet to swais.access.gpo.gov, then login as guest, (no password required). Dial-in users should use communications software and modem to call (202) 512–1661; type swais, then login as guest (no password required). For general information about *GPO Access*, contact the *GPO Access* User Support Team by sending Internet e-mail to gpoaccess@gpo.gov; by faxing to (202) 512–1262; or by calling toll free 1–888–293–6498 or (202) 512–1530 between 7 a.m. and 5 p.m. Eastern time, Monday–Friday, except for Federal holidays.

The annual subscription price for the **Federal Register** paper edition is $555, or $607 for a combined **Federal Register**, Federal Register Index and List of CFR Sections Affected (LSA) subscription; the microfiche edition of the **Federal Register** including the Federal Register Index and LSA is $220. Six month subscriptions are available for one-half the annual rate. The charge for individual copies in paper form is $8.00 for each issue, or $8.00 for each group of pages as actually bound; or $1.50 for each issue in microfiche form. All prices include regular domestic postage and handling. International customers please add 25% for foreign handling. Remit check or money order, made payable to the Superintendent of Documents, or charge to your GPO Deposit Account, VISA or MasterCard. Mail to: New Orders, Superintendent of Documents, P.O. Box 371954, Pittsburgh, PA 15250–7954.

There are no restrictions on the republication of material appearing in the **Federal Register.**

How To Cite This Publication: Use the volume number and the page number. Example: 60 FR 12345.

SUBSCRIPTIONS AND COPIES

PUBLIC	
Subscriptions:	
Paper or fiche	**202–512–1800**
Assistance with public subscriptions	**512–1806**
General online information	**202–512–1530** **1–888–293–6498**
Single copies/back copies:	
Paper or fiche	**512–1800**
Assistance with public single copies	**512–1803**
FEDERAL AGENCIES	
Subscriptions:	
Paper or fiche	**523–5243**
Assistance with Federal agency subscriptions	**523–5243**

For other telephone numbers, see the Reader Aids section at the end of this issue.

NOW AVAILABLE ONLINE

The January 1997 Office of the Federal Register Document Drafting Handbook

Free, easy, online access to the newly revised January 1997 Office of the Federal Register Document Drafting Handbook (DDH) is now available at:

http://www.nara.gov/nara/fedreg/ddh/ddhout.html

This handbook helps Federal agencies to prepare documents for publication in the **Federal Register**.

For additional information on access, contact the Office of the Federal Register's Technical Support Staff.

Phone: 202–523–3447

E-mail: info@fedreg.nara.gov

FEDERAL REGISTER WORKSHOP

THE FEDERAL REGISTER: WHAT IT IS AND HOW TO USE IT

FOR: Any person who uses the Federal Register and Code of Federal Regulations.

WHO: Sponsored by the Office of the Federal Register.

WHAT: Free public briefings (approximately 3 hours) to present:

1. The regulatory process, with a focus on the Federal Register system and the public's role in the development of regulations.
2. The relationship between the Federal Register and Code of Federal Regulations.
3. The important elements of typical Federal Register documents.
4. An introduction to the finding aids of the FR/CFR system.

WHY: To provide the public with access to information necessary to research Federal agency regulations which directly affect them. There will be no discussion of specific agency regulations.

WASHINGTON, DC

WHEN: April 15, 1997 at 9:00 am

WHERE: Office of the Federal Register
Conference Room
800 North Capitol Street, NW.
Washington, DC
(3 blocks north of Union Station Metro)

RESERVATIONS: 202–523–4538

For additional briefings see the announcement in Reader Aids

Printed on recycled paper containing 100% post consumer waste

Contents

Federal Register

Vol. 62, No. 67

Tuesday, April 8, 1997

Agricultural Marketing Service
PROPOSED RULES
Milk marketing orders:
Eastern Colorado, 16737–16738
NOTICES
Agency information collection activities:
Proposed collection; comment request, 16756–16757

Agriculture Department
See Agricultural Marketing Service
See Animal and Plant Health Inspection Service
See Food and Consumer Service
See Natural Resources Conservation Service

Animal and Plant Health Inspection Service
PROPOSED RULES
Plant-related quarantine, foreign:
Cotton and cotton products; pest introduction prevention, 16737

Broadcasting Board of Governors
NOTICES
Meetings; Sunshine Act, 16758

Children and Families Administration
NOTICES
Grants and cooperative agreements; availability, etc.:
Head Start—
Disability services quality improvement centers, 16816–16840
Quality improvement centers, 16840–16862

Coast Guard
RULES
Civil monetary penalties; inflation adjustments, 16695–16703
PROPOSED RULES
Vessel inspection alternatives:
Streamlined inspection program; establishment, 17008–17022

Commerce Department
See International Trade Administration
See National Institute of Standards and Technology
See National Oceanic and Atmospheric Administration

Committee for the Implementation of Textile Agreements
NOTICES
Cotton, wool, and man-made textiles:
Dominican Republic, 16790–16791

Commodity Futures Trading Commission
RULES
Foreign futures and options transactions:
MEFF Sociedad Rectora de Productas Financieros Derivados de Renta Variable, 16687–16690

Customs Service
NOTICES
Tariff rate quotas:
Tuna fish, 16890

Defense Department
RULES
Military recruiting and Reserve Officer Training Corps program access to institutions of higher education, 16691–16695
NOTICES
Agency information collection activities:
Proposed collection; comment request, 16791
Submission for OMB review; comment request, 16791–16792
Meetings:
National Defense Panel, 16792–16793
President's Security Policy Advisory Board, 16793
Privacy Act:
Systems of records, 16793–16795

Drug Enforcement Administration
NOTICES
Applications, hearings, determinations, etc.:
Aikens-Afful, Nathaniel, M.D., 16871
Okun, James D., M.D., 16871–16872
Sanders, Raymond S., D.P.M., 16872–16873

Energy Department
See Energy Efficiency and Renewable Energy Office
See Federal Energy Regulatory Commission
See Western Area Power Administration
NOTICES
Meetings:
Environmental Management Site Specific Advisory Board—
Kirtland Area Office (Sandia), 16795–16796
Paducah Gaseous Diffusion Plant, 16796
Radiological condition certification:
Energy Technology Engineering Center, 16796–16798

Energy Efficiency and Renewable Energy Office
PROPOSED RULES
Consumer products; energy conservation program:
Refrigerators and refrigerator-freezers, externally vented; test procedures, 16739–16746

Environmental Protection Agency
RULES
Air quality implementation plans; approval and promulgation; various States:
Illinois, 16704–16706
Superfund program:
National oil and hazardous substances contingency plans—
National priorities list update, 16706–16707
PROPOSED RULES
Air quality implementation plans; approval and promulgation; various States:
Illinois, 16746–16747
Hazardous waste:
Characteristic metal wastes; treatment standards (Phase IV); data availability, 16753
Identification and listing—
Petroleum refining process wastes; land disposal restrictions for newly hazardous wastes, 16747–16753

NOTICES
Municipal solid waste landfill permit programs; adequacy determinations:
Michigan, 16804–16806
Water pollution control:
State sludge management program—
North Carolina, 16806–16807

Executive Office of the President
See Presidential Documents

Federal Aviation Administration
RULES
Air carrier certification and operations:
Aircraft flight simulator use in pilot training, testing, and checking and at training centers; editorial and other changes
Correction, 16892
Airworthiness directives:
McDonnell Douglas, 16664–16667
Schempp-Hirth K.G., 16667–16668
Class E airspace, 16668–16669
PROPOSED RULES
Air traffic operating and flight rules:
Airport security areas, unescorted access privileges; employment history, verification, and criminal history records check
Correction, 16892

Federal Communications Commission
NOTICES
Common carrier services:
Telecommunications Act of 1996; implementation—
In-region, interstate, domestic interLATA services by Bell Operating companies; non-accounting safeguards, 16807–16808
Rulemaking proceedings; petitions filed, granted, denied, etc., 16808

Federal Deposit Insurance Corporation
RULES
Practice and procedure:
Applications, requests, submittals, etc.; appropriate FDIC regional office and other definitions, 16662–16664

Federal Energy Regulatory Commission
NOTICES
Environmental statements; availability, etc.:
Armstrong Energy Resources, 16804
Southern California Edison Co.; correction, 16892
Applications, hearings, determinations, etc.:
Black Marlin Pipeline Co., 16798
Boston Edison Co., 16798
CNG Transmission Corp., 16798
Eastern Shore Natural Gas Co., 16799
Electric Clearinghouse, Inc., 16799
EPEM Marketing Co., 16799
Florida Power & Light Co., 16800
Gas Transport, Inc., 16800
Great Lakes Gas Transmission L.P., 16800
New Hampshire Electric Cooperative, Inc., 16800–16801
NorAm Energy Services, Inc., 16801
NorAm Gas Transmission Co., 16801
Northern Natural Gas Co., 16801–16802
NRGenerating Holdings (No. 3) B.V., 16802
NRGenerating Holdings (No. 4) B.V., 16802
Overthrust Pipeline Co., 16802–16803
Panhandle Eastern Pipe Line Co., 16803
Tennessee Gas Pipeline Co., 16803
Transcontinental Gas Pipe Line Corp.; correction, 16892

Federal Highway Administration
RULES
Motor carrier safety standards:
Financial responsibility minimum levels; hours of service of drivers, 16707–16709
NOTICES
Environmental statements; notice of intent:
San Mateo County, CA, 16887–16888

Federal Maritime Commission
NOTICES
Freight forwarder licenses:
CERES Freight Systems, Inc., et al., 16808

Federal Reserve System
NOTICES
Banks and bank holding companies:
Change in bank control, 16809
Formations, acquisitions, and mergers; correction, 16809
Meetings; Sunshine Act, 16809

Federal Trade Commission
RULES
Industry guides:
Jewelry, precious metals, and pewter industries; platinum product claims, 16669–16687
NOTICES
Compliance assistance and civil penalty leniency policies for small entities; policy statement and comment request, 16809–16814
Prohibited trade practices:
Autodesk, Inc., et al., 16814–16815

Food and Consumer Service
NOTICES
Food distribution programs:
Nutrition program for elderly; assistance level, 16757–16758

Food and Drug Administration
NOTICES
Federal regulatory review:
Grassroots regulatory partnership meetings—
Cincinnati District; drug review process, etc., 16862
Medical devices; premarket approval:
Unizyme Enzymatic Cleaner, 16862–16863

Health and Human Services Department
See Children and Families Administration
See Food and Drug Administration
See Health Care Financing Administration
See National Institutes of Health
See Substance Abuse and Mental Health Services Administration
RULES
Individual health insurance market requirements, 16985–17004

Health Care Financing Administration
RULES
Group health plans; access, portability, and renewability requirements, 16894–16976
Individual health insurance market requirements
Correction, 17004–17005

NOTICES
Agency information collection activities:
Submission for OMB review; comment request, 16863

Housing and Urban Development Department
NOTICES
Grants and cooperative agreements; availability, etc.:
Homeless assistance continuum of care systems, 17024–17037

Interior Department
See Land Management Bureau
NOTICES
Meetings:
Exxon Valdez Oil Spill Public Advisory Group, 16864

Internal Revenue Service
RULES
Excise taxes:
Group health plans; access, portability, and renewability requirements, 16894–16976
Correction, 17004
PROPOSED RULES
Excise taxes:
Group health plans; health insurance portability, 16977–16978

International Trade Administration
NOTICES
Antidumping:
Brass sheet and strip from—
Canada, 16759–16763
Ferrosilicon from—
Brazil, 16763–16768
Forged steel crankshafts from—
United Kingdom, 16768–16771
Fresh cut flowers from—
Colombia, 16772–16782
Polychloroprene rubber from—
Japan, 16782
Countervailing duties:
Welded carbon steel pipes and tubes and welded carbon steel line pipe from—
Turkey, 16782–16788

Justice Department
See Drug Enforcement Administration
See National Institute of Justice
NOTICES
Pollution control; consent judgments:
Conoco Inc., 16870
Trident Seafoods Corp., 16870
Western Publishing Co., Inc., et al., 16870–16871

Labor Department
See Occupational Safety and Health Administration
See Pension and Welfare Benefits Administration

Land Management Bureau
NOTICES
Agency information collection activities:
Proposed collection; comment request, 16864–16866
Disclaimer of interest applications:
Idaho, 16866
Public land orders:
Nevada, 16866–16867
Realty actions; sales, leases, etc.:
Wyoming, 16867–16869
Resource management plans, etc.:
Carson City District, NV; fire management plan, 16869–16870

National Aeronautics and Space Administration
NOTICES
Patent licenses; non-exclusive, exclusive, or partially exclusive:
L'Garde, Inc., 16874

National Archives and Records Administration
NOTICES
Meetings:
Presidential Libraries Advisory Committee, 16874

National Highway Traffic Safety Administration
RULES
Motor vehicle safety standards:
Lamps, reflective devices, and associated equipment—
Retroreflective sheeting or reflex reflectors for rear of truck tractors, 16709–16717
Occupant protection in interior impact—
Head impact protection, 16718–16736
NOTICES
Motor vehicle safety standards:
Nonconforming vehicles—
Importation eligibility; determinations, 16888–16889

National Institute of Justice
NOTICES
Grants and cooperative agreements; availability, etc.:
Investigator-initiated research, 16873

National Institute of Standards and Technology
NOTICES
Information processing standards, Federal:
Database language SQL, etc.; validation services terminated, 16788–16789

National Institutes of Health
NOTICES
Meetings:
National Institute of Dental Research, 16863–16864

National Oceanic and Atmospheric Administration
RULES
Fishery conservation and management:
Alaska; fisheries of Exclusive Economic Zone—
Shortraker/rougheye rockfish, 16736
PROPOSED RULES
Fishery conservation and management:
Northeastern United States fisheries—
Summer flounder, etc., 16753–16755
NOTICES
Endangered and threatened species:
Northern right whale protection; petition, 16789
Permits:
Endangered and threatened species, 16789–16790
Endangered and threatened species; correction, 16892

Natural Resources Conservation Service
RULES
Organization, functions, and authority delegations, 16659–16662

Nuclear Regulatory Commission
NOTICES
Agency information collection activities:
Submission for OMB review; comment request, 16874–16875
Meetings; Sunshine Act, 16875

Occupational Safety and Health Administration
NOTICES
State plans; standards approval, etc.:
Maryland, 16873–16874

Pension and Welfare Benefits Administration
RULES
Employee Retirement Income Security Act:
Group health plans; disclosure requirements, 16979–16985
Group health plans; access, portability, and renewability requirements, 16894–16976
Correction, 17004

Postal Rate Commission
NOTICES
Post office closings; petitions for appeal:
Russell Springs, KS, 16875–16876

Presidential Advisory Committee on Gulf War Veterans' Illnesses
NOTICES
Meetings, 16876–16877

Presidential Documents
EXECUTIVE ORDERS
Committees; establishment, renewal, termination, etc.:
Critical Infrastructure Protection, President's Commission on; amendment (EO 13041), 17039

President's Council on Sustainable Development
NOTICES
Meetings, 16876

Prospective Payment Assessment Commission
NOTICES
Meetings, 16877

Public Health Service
See Food and Drug Administration
See National Institutes of Health
See Substance Abuse and Mental Health Services Administration

Railroad Retirement Board
NOTICES
Agency information collection activities:
Proposed collection; comment request, 16877–16878
Meetings; Sunshine Act, 16878

Securities and Exchange Commission
RULES
Electronic Data Gathering, Analysis, and Retrieval System (EDGAR):
Filer Manual—
Update and incorporation by reference; correction, 16690–16691
NOTICES
Agency information collection activities:
Submission for OMB review; comment request, 16878
Joint industry plan:
National Association of Securities Dealers, Inc., et al., 16880–16883
Self-regulatory organizations; proposed rule changes:
American Stock Exchange, Inc., 16883–16884
National Association of Securities Dealers, Inc., 16884–16886
Pacific Stock Exchange, Inc., 16886–16887
Applications, hearings, determinations, etc.:
PaineWebber/Kidder, Peabody Cash Reserve Fund, Inc., 16879–16880
PaineWebber/Kidder, Peabody Premium Account Fund, 16878–16879

Substance Abuse and Mental Health Services Administration
NOTICES
Meetings:
Substance Abuse and Mental Health Services Administration special emphasis panels, 16864

Textile Agreements Implementation Committee
See Committee for the Implementation of Textile Agreements

Transportation Department
See Coast Guard
See Federal Aviation Administration
See Federal Highway Administration
See National Highway Traffic Safety Administration

Treasury Department
See Customs Service
See Internal Revenue Service
NOTICES
Meetings:
Debt Management Advisory Committee, 16889–16890

Veterans Affairs Department
NOTICES
Agency information collection activities:
Proposed collection; comment request, 16890–16891
Submission for OMB review; comment request, 16891

Western Area Power Administration
NOTICES
Energy Planning and Management Program Power Marketing Initiative:
Salt Lake City Area integrated projects contracts, application, 16804

Separate Parts In This Issue

Part II
Department of the Treasury, Internal Revenue Service; Department of Labor, Pension and Welfare Benefits Administration; Health and Human Services Department, Health Care Financing Administration, 16894–17005

Part III
Department of Transportation, Coast Guard, 17008–17022

Part IV
Housing and Urban Development Department, 17024–17036

Part V
The President, 17039

Reader Aids
Additional information, including a list of public laws, telephone numbers, reminders, and finding aids, appears in the Reader Aids section at the end of this issue.

Electronic Bulletin Board
Free **Electronic Bulletin Board** service for Public Law numbers, **Federal Register** finding aids, and a list of documents on public inspection is available on 202–275–1538 or 275–0920.

CFR PARTS AFFECTED IN THIS ISSUE

A cumulative list of the parts affected this month can be found in the Reader Aids section at the end of this issue.

3 CFR

Executive Orders

13010.....17039
13041.....17039

7 CFR

600.....16659
601.....16659

Proposed Rules:

319.....16737
1137.....16737

10 CFR

Proposed Rules:

430.....16739

12 CFR

303.....16662

14 CFR

39 (2 documents) 16664, 16667
61.....16892
71.....16668

Proposed Rules:

107.....16892
108.....16892

16 CFR

23.....16669

17 CFR

30.....16687
232.....16690

26 CFR

54 (2 documents) 16894, 17004

Proposed Rules:

54.....16977

29 CFR

2520.....16979
2590 (2 documents) 16894, 17004

32 CFR

216.....16691

33 CFR

5.....16695
26.....16695
27.....16695
95.....16695
100.....16695
110.....16695
130.....16695
136.....16695
138.....16695
140.....16695
153.....16695
177.....16695

40 CFR

52.....16704
300(2 documents).....16706, 16707

Proposed Rules:

52.....16746
261.....16747
268.....16753

45 CFR

144.....16894
146.....16894
148(2 documents).....16985, 17004

46 CFR

2.....16695

Proposed Rules:

8.....17008

49 CFR

387.....16707
390.....16707
395.....16707
571 (2 documents) 16709, 16718
589.....16718

50 CFR

679.....16736

Proposed Rules:

648.....16753

Rules and Regulations

Federal Register
Vol. 62, No. 67
Tuesday, April 8, 1997

This section of the FEDERAL REGISTER contains regulatory documents having general applicability and legal effect, most of which are keyed to and codified in the Code of Federal Regulations, which is published under 50 titles pursuant to 44 U.S.C. 1510.

The Code of Federal Regulations is sold by the Superintendent of Documents. Prices of new books are listed in the first FEDERAL REGISTER issue of each week.

DEPARTMENT OF AGRICULTURE

Natural Resources Conservation Service

7 CFR Parts 600 and 601

Organization and Functions

AGENCY: Natural Resources Conservation Service, USDA.

ACTION: Final rule.

SUMMARY: The Natural Resources Conservation Service revises the information on the organization and functions to reflect changes as a result of the USDA reorganization.

EFFECTIVE DATE: January 30, 1997.

FOR FURTHER INFORMATION CONTACT: Peter Zeck, 202–690–4860.

SUPPLEMENTARY INFORMATION:

Rulemaking Analyses

EO 12291: Non-major.

Regulatory Flexibility Act: No significant impact.

Paperwork Reduction Act: No significant impact.

National Environmental Policy Act: Exempt.

List of Subjects in 7 CFR Parts 600 and 601

Functions and organization (Government agencies).

For the reason stated in the preamble, CFR Chapter 7 is amended by revising Parts 600 and 601 to read as follows.

PART 600—ORGANIZATION

Sec.

600.1 General.
600.2 National headquarters.
600.3 Regional offices.
600.4 State offices.
600.5 Area offices.
600.6 Field offices.
600.7 Specialized field offices.
600.8 Plant materials centers.

Authority: 7 U.S.C. 6962.

§ 600.1 General

(a) The Natural Resources Conservation Service (NRCS) was authorized by the Federal Crop Insurance Reform and Department of Agriculture Reorganization Act of 1994 (Pub. L. 103–354, 7 U.S.C. 6901 note) and established by Secretary's Memorandum 1010–1 (2.b.6), *Reorganization of the Department of Agriculture,* to provide national leadership in the conservation, development, and productive use of the Nation's natural resources. Such leadership encompasses soil, water, air, plant, and wildlife conservation with consideration of the many human (economic and sociological) interactions with these resources. NRCS is the Federal agency that works with landowners on private lands to help them conserve their natural resources. NRCS employees are highly skilled in many scientific and technical specialities, including soil science, soil conservation, agronomy, biology, agroecology, range conservation, forestry, engineering, geology, hydrology, wetlands science, cultural resources, and economics. NRCS was formerly the Soil Conservation Service (SCS) which was established by the Soil Conservation Act of 1935 (Pub. L. 74–46, 49 Stat. 163 (16 U.S.C. 590 (a-f))). NRCS has responsibility for the three major areas covered by SCS—soil and water conservation, natural resource surveys (soil surveys, resources inventory, snow surveys, and water supply forecasting), and community resource protection and management (watershed projects, river basin studies and investigations, resource conservation and development areas, land evaluation and site assessment, and emergency watershed protection)—the Wetland Reserve Program, Environmental Quality Incentives Program, Grazing Lands Conservation Initiative, Farmland Protection Program, Wildlife Habitat Incentives Program, and Forestry Incentives Program.

(b) The NRCS organization consists of a National Headquarters located in Washington, D.C.; six regional offices; 50 state offices and equivalent offices in the Caribbean Area and the U.S. Trust Territories of the Pacific Basin Area; approximately 2,500 field offices and 300 specialized offices; 28 plant materials centers; eight national centers; and eight natural resources institutes. NRCS is headed by a Chief who reports to the USDA Under Secretary for Natural Resources and Environment.

§ 600.2 National headquarters.

(a) *Chief.* The Chief, with assistance of the Associate Chief, is responsible for administering a coordinated national program of natural resource conservation; planning, directing, and coordinating all program, technical, and administrative activities of NRCS; developing policies and procedures; correlating NRCS conservation programs with other agencies; accepting departmental leadership for programs for other activities assigned by the Secretary of Agriculture; and serving as Equal Employment Opportunity Officer for NRCS.

(b) *Deputy Chiefs.* Four deputy chiefs assist the Chief as follows:

(1) *Deputy Chief for Management.* The Deputy Chief for Management is responsible for management services, operations management and oversight, human resources management, civil rights employment, financial management, information technology, administrative support (providing a coordinated administrative management program for National Headquarters activities), special projects, and controlled correspondence. This deputy chief is also responsible for the activities of three national centers: Business management, information technology, and employee development.

(2) *Deputy Chief for Programs.* The Deputy Chief for Programs is responsible for conservation operations, watershed planning, wetlands restoration, community assistance, resource conservation and development, USDA program outreach, civil rights program compliance, budget formulation and analysis, and international conservation.

(3) *Deputy Chief for Soil Survey and Resource Assessment.* The Deputy Chief for Soil Survey and Resource Assessment is responsible for soil survey, resource inventory, and resource assessment and strategic planning. This deputy chief is also responsible for the activities of two national centers: soil survey and cartography and geospatial.

(4) *Deputy Chief for Science and Technology.* The Deputy Chief for Science and Technology is responsible for the ecological sciences, conservation engineering, institutes, and resource economics and social sciences division.

This deputy chief is also responsible for the activities of three nation centers (water and climate, soil mechanics, and plant data) and eight institutes. This deputy chief, working closely with the deputy chiefs for Management and Soil Survey and Resource Assessment, provides overall direction for the National Science and Technology Consortium.

(c) *National Science and Technology Consortium.* The consortium consists of four divisions, three centers, eight technical institutes, and several cooperating scientists under the Deputy Chief for Science and Technology; two divisions and two centers under the Deputy Chief for Soil Survey and Resource Assessment; and three centers under the Deputy Chief for Management.

(1) *Centers.* The eight centers provide specific products and services that maintain and enhance the technical quality of the agency. The centers are: water and climate, soil mechanics, plant data, soil survey, cartography and geospatial, information technology, business management, and employee development.

(2) *Institutes.* The eight institutes are: soil quality, natural resources inventory and analysis, grazing lands technology, social sciences, watershed science, wetlands science, wildlife habitat management, and information technology. The institutes acquire, develop, and transfer needed technology in special emphasis areas so field employees can better serve their customers. The institutes often establish partnerships with other Federal agencies, universities, and public and private organizations.

(3) *Cooperating Scientists.* Cooperating scientists work in the areas of soil erosion and sedimentation, air quality, and agroforestry. These scientists are located at various universities and research centers.

(d) *Legislative Affairs.* The Legislative Affairs Staff provides coordination and assistance to the Chief on legislative affairs issues and activities.

(e) *Conservation Communication.* The Conservation Communication Staff is responsible for communications, volunteer programs, conservation education, and public affairs activities.

(f) *Strategic Natural Resource Issues.* The Strategic Natural Resource Issues Staff is responsible for coordinating priority strategic issues as determined by the Chief.

§ 600.3 Regional offices.

Each regional office is under the direction and supervision of a regional conservationist. Regional offices direct, coordinate, and integrate all phases of NRCS programs and activities, and address the total natural resource needs of the region. Regional offices are located in Beltsville, Maryland; Atlanta, Georgia; Fort Worth, Texas; Madison, Wisconsin; Lincoln, Nebraska; and Sacramento, California.

§ 600.4 State offices.

Each office is under the direction and supervision of a State conservationist. Each State conservationist is responsible for NRCS programs in a State. The Pacific Basin Area Office, under the direction and supervision of a director, serves the U.S. Trust Territories in that area. The Caribbean Area Office, under the direction and supervision of a director, serves the Commonwealth of Puerto Rico and the U.S. Virgin Islands. Directors of the Pacific Basin and Caribbean areas have the same responsibility and authority as a State conservationist. All references to State conservationist in this chapter include the directors of the Pacific Basin and Caribbean areas.

§ 600.5 Area offices.

Each area office is under the direction and supervision of an area conservationist or assistant State conservationist for field operations who is responsible for NRCS activities in the geographical area served by the area office. Usually the geographical area includes multiple field offices and counties. Many area offices now consist of teams working on a watershed or other geopolitical basis.

§ 600.6 Field offices.

Each field office is under the direction and supervision of a district conservationist who is responsible for NRCS activities in the geographical area served by the field office. Usually the geographical area of a field office includes one or more conservation districts and one or more counties. Field offices are generally collocated with other USDA agencies in USDA Service Centers.

§ 600.7 Specialized field offices.

Other field offices serve specialized activities, such as watershed protection and flood reduction projects, construction projects, resource conservation and development areas, and soil survey activities. Direction and supervision of these offices are designated by State conservationists.

§ 600.8 Plant materials centers.

Plant materials centers (PMC) assemble and test plant species for conservation uses. Usually a PMC serves two or more States, and is under the jurisdiction of the State conservationist where the center is located. Each PMC is directed and supervised by a manager who is responsible to a State office specialist/manager who is responsible to a State office specialist/manager as designated by the State conservationist.

PART 601—FUNCTIONS

Sec.
601.1 Functions assigned.
601.2 Functions reserved to the Secretary of Agriculture.
601.3 Natural disaster assistance.
601.4 Defense responsibilities.

Authority: 7 U.S.C. 1010–1011; 16 U.S.C. 590a–590f, 1001–1008, 2001–2009, 2203–2205, 3801 *et seq.*; 33 U.S.C. 701b–1.

§ 601.1 Functions assigned.

The Natural Resources conservation Service (NRCS) is the Federal agency that works with private landowners to conserve their natural resources. NRCS employees help land users and communities approach conservation planning and implementation with an understanding of how natural resources relate to each other and to people—and how human activities affect those resources. The agency emphasizes voluntary, science-based assistance, partnerships, and cooperative problem solving at the community level. The mission of NRCS is to work on the Nation's non-Federal lands to conserve, improve, and sustain natural resources. The following functions support the mission.

(a) NRCS facilitates and provides conservation technical assistance at the local level that helps people assess their natural resource conditions and needs, set goals, identify programs and other resources to address those needs, develop proposals and recommendations, implement solutions, and measure their success. The agency's role is to assist with:

(1) Resource inventories,

(2) Resource assessments,

(3) Planning assistance, and/or

(4) Technical assistance.

(b) NRCS provides technical assistance through local conservation districts to land users, communities, watershed groups, Federal and State agencies, other partners, and customers.

(c) NRCS provides assistance on a voluntary basis.

(d) The agency's work focuses on soil, water, air, plant, and animal conservation including erosion reduction, water quality improvement, wetland restoration and protection, fish and wildlife habitat improvement, range management, stream restoration, water management, and other natural resource issues.

(e) NRCS has general responsibility for administration of the following programs:

(1) Conservation operations, authorized by the Soil Conservation Act of 1935 and the Soil and Water Resources Conservation Act of 1977. Activities include:

(i) Conservation technical assistance to land users, communities, units of State and local government, and other Federal agencies in planning and implementing natural resource solutions to reduce erosion, improve soil and water quantity and quality, improve and conserve wetlands, enhance fish and wildlife habitat, improve air quality, improve pasture and range conditions, reduce upstream flooding, and improve woodlands. Assistance is also provided to implement the highly erodible land (HEL) and wetland conservation (Swampbuster) provisions, Wetlands Reserve Program (WRP), and Conservation Reserve Program (CRP) in the 1985 Food Security Act, as amended by the Food, Agriculture, Conservation and Trade Act of 1990 and Federal Agriculture Improvement and Reform Act of 1996. NRCS technical field staff make HEL and wetland determinations and assist land users to develop and implement conservation plans needed to ensure compliance with the law. NRCS is also the lead Federal agency for delineating wetlands on agricultural lands for purposes of implementing both the provisions of the Food Security Act and Section 404 of the Clean Water Act.

(ii) Soil surveys which provide the public with local information on the uses and capabilities of their soil resource. Soil surveys are based on scientific analysis and classification of the soils and are used to determine land capabilities and conservation treatment needs. Surveys are conducted cooperatively with other Federal agencies, land grant universities, State agencies, and local units of government. NRCS is the world leader in soil classification and soil mapping, and is expanding into soil quality.

(iii) Snow survey and water supply forecasts that provide western States and Alaska with vital information and forecasts of seasonable variable water supplies. NRCS field staff in cooperation with partnering organizations manually collect data from 850 remote high mountain sites. Data is electronically collected from an additional 600 SNOTEL (automated snowpack telemetry network) sites. In cooperation with the National Weather Service, the data is assembled and analyzed. Then, NRCS staff develop seasonal water supply forecasts.

(iv) Plant Material Centers assemble, test, and encourage increased plant propagation and usefulness of plant species for biomass production, carbon sequestration, erosion reduction, wetland restoration, water quality improvement, streambank and riparian area protection, coastal dune stabilization, and to meet other special conservation treatment needs. The work is carried out cooperatively with State and Federal agencies, private organizations, commercial businesses, and seed and nursery associations. After species are proven, they are released to the private sector for commercial production.

(2) Conservation programs in the Federal Agriculture Improvement and Reform Act of 1996, most of which are funded by the Commodity Credit Corporation (CCC). NRCS provides leadership and technical assistance for the following programs:

(i) Environmental Quality Incentives Program (EQIP). EQIP provides a single, voluntary conservation program for farmers and ranchers who face serious threats to soil, water, and related natural resources. Nationally, it provides technical, financial, and educational assistance, half of it targeted to livestock-related natural resource problems and half to more general conservation priorities.

(ii) Wetlands Reserve Program (WRP). WRP is a voluntary program to restore and protect wetlands on private property. It provides an opportunity for landowners to receive financial incentives to enhance wetlands in exchange for retiring marginal agricultural land.

(iii) Wildlife Habitat Incentives Program (WHIP). WHIP is a voluntary program for people who want to develop and improve wildlife habitat on private lands. It provides both technical assistance and cost sharing to help establish and improve fish and wildlife habitat.

(iv) Farmland Protection Program (FFP). This program provides funds to help purchase development rights to keep productive farmland in agricultural use. Working through existing programs, USDA joins with State, tribal, or local governments to acquire voluntary conservation easements or other interests from landowners.

(v) Forestry Incentives Programs (FIP). FIP supports good forest management practices on privately owned, non-industrial forest lands nationwide. FIP is designed to benefit the environment while meeting future demands for wood products. Although not funded by CCC, Section 373 of the Federal Agriculture Improvement and Reform Act of 1996 extended the program under discretionary appropriations.

(3) Resource Conservation and Development (RC&D) Program, authorized by Section 102 of the Flood and Agriculture Act of 1962 (Pub. L. 87–702) and Sections 1528–1538 of the Agriculture and Food Act of 1981 (Pub. L. 97–98). This program is initiated and directed at the local level by volunteers who involve multiple communities, various units of government, municipalities, and grassroots organizations. RC&D is a catalyst for civic-oriented groups to share knowledge and resources in a collective attempt to solve common problems. The program offers aid in balancing the environmental, economic, and social needs of an area.

(4) Rural Abandoned Mine Program (RAMP) and other responsibilities assigned under the Surface Mining Control and Reclamation Act of 1977 (Pub. L. 95–87). Under RAMP, NRCS provides technical and financial assistance to landowners to reclaim certain abandoned coal-mined lands. This assistance can be used to reclaim these lands for approved uses, which include pasture, range, woodland, cropland, noncommercial recreation, and wildlife habitat. The program's first priority is to protect public health, welfare, safety, and property from hazards caused by past surface coal mining or by surface effects of deep mining.

(5) Watershed surveys and planning, authorized by the Watershed Protection and Flood Prevention Act (Pub. L. 83–566, Section 6 (16 U.S.C. 1001–1008)). This 1996 appropriations act combined the Small Watershed Planning and the River Basin Surveys and Investigations programs into a new program called the Watershed Surveys and Planning Program. The program involves cooperation with other Federal, State, and local agencies to conduct watershed planning, river basin surveys and investigations, flood hazard analysis, and flood plain management assistance, which aid in the development of coordinated water resource programs, including the development of guiding principles and procedures.

(6) Watershed and flood prevention operations include the following activities:

(i) Watershed operations authorized by the Flood Control Act of 1944. Flood prevention operations include: Planning and installing works of improvement and land treatment measures; conservation, development, utilization, and disposal of water; and reduction of sedimentation and erosion damages.

This may also include the development of recreational facilities and the improvement of fish and wildlife habitat.

(ii) The Emergency Watershed Protection (EWP) Program, authorized by Section 216 of the Flood Control Act of 1950 (Pub. L. 81–516) and Section 403 of Title IV of the Agricultural Credit Act of 1978 (Pub. L. 95–334). EWP provides assistance to reduce hazards to life and property in watersheds damaged by severe natural events. Emergency work includes establishing quick vegetative cover on denuded land, sloping steep land, and eroding banks; opening dangerously restricted channels; repairing diversions and levees; and other emergency work. NRCS provides technical and financial assistance for disaster cleanup; stream corridor, wetland, and riparian area restoration; and urban planning and site location assistance to the Federal Emergency Management Agency (FEMA) when relocating communities out of flood plains.

(iii) The Watershed Protection and Flood Prevention Act (Pub. L. 83–566), also known as the Small Watersheds Program. This program provides for cooperation with local sponsors, State, and other public agencies in the installation of planned works of improvement and land treatment measures in approved watershed projects. Eligible measures include flood prevention, water conservation, recreation, agricultural water management, flood plain easements, municipal and industrial water, and rural water supply.

§ 601.2 Functions reserved to the Secretary of Agriculture.

(a) Designation of new Resource Conservation and Development (RC&D) areas. Once designated, these areas may receive RC&D Program assistance from NRCS.

(b) Administration of the Soil and Water Resources Conservation Act of 1977 (Pub. L. 95–192) to conduct an appraisal and develop a national conservation program every five years.

§ 601.3 Natural disaster assistance.

(a) To assist in emergencies caused by natural disasters, NRCS may:

(1) Provide technical and financial assistance under authority of Section 216 of the Flood Control Act of 1950 (Pub. L. 81–516, Stat. 184, 33 U.S.C. 701b) and Section 403 of Title IV of the Agricultural Credit Act of 1978 (Pub. L. 95–334).

(2) Provide technical assistance for rehabilitation of land and conservation systems for which other U.S. Department of Agriculture agencies provide cost sharing.

(3) Provide technical assistance on rehabilitation of rural lands damaged by natural disaster.

(4) Provide assistance in evaluating the severity of the disaster, assessing problems created, and determining the amount and kind of emergency work needed for restoration.

(5) Provide available information, maps, and reports on projects described in Parts 621, 622, 623, and 640 of Section 216 of the Flood Control Act of 1950.

(6) Provide assistance in locating heavy earthmoving equipment.

(7) Make light trucks and other types of NRCS transportation equipment available for emergency use.

(8) Provide technical assistance in locating alternate routes when existing roads and highways cannot be used.

(b) In a disaster, it is the responsibility of the state conservationist to determine the extent of NRCS assistance. In presidentially-declared disasters, NRCS coordinates emergency assistance with the Federal Emergency Management Agency (FEMA).

§ 601.4 Defense responsibilities.

In the event of nuclear attack, NRCS is responsible for providing:

(a) Technical guidance, based upon results of radiological monitoring and the extent of radiological contamination to farmers, ranchers, and others relating to:

(1) The selection and use of land for agricultural production.

(2) The harvesting of crops.

(3) The use of crops stored on the farm.

(4) The use, conservation, disposal, and control of water to insure adequate usable water for agricultural purposes and to prevent floods.

(5) The safety of livestock.

(b) Basic soil information, land use guides, and onsite technical assistance in selecting land for production and in applying practices to increase production of food and fiber with maximum efficiency.

David C. White,

Director, Conservation Communications Staff, Natural Resources Conservation Service.

[FR Doc. 97–8943 Filed 4–7–97; 8:45 am]

BILLING CODE 3410–16–M

FEDERAL DEPOSIT INSURANCE CORPORATION

12 CFR Part 303

RIN 3064–AC03

Applications, Requests, Submittals, Delegations of Authority, and Notices Required to be Filed by Statute or Regulation

AGENCY: Federal Deposit Insurance Corporation.

ACTION: Final rule.

SUMMARY: The Federal Deposit Insurance Corporation (FDIC) is amending the definition of ''appropriate FDIC regional office'' and other related terms contained in its applications regulation to change the way the FDIC designates the appropriate regional office for purposes of filing applications, requests, submittals, and notices. The amendment relates to a realignment of the FDIC's regional office operations. As a result, the FDIC Division of Supervision (DOS) and the Division of Compliance and Consumer Affairs (DCA) will supervise groups of related insured institutions from one FDIC regional office. The designated regional office for a group of institutions will, except in rare circumstances, be the one in which the group's major policy and decision makers are located. This location will coincide with the headquarters location of holding companies or lead institutions in most instances. Realigning operations in this manner will streamline supervision processes and simplify communication channels.

All supervisory matters processed in regional offices, including applications and administrative actions, that involve insured institutions within a group of related institutions will be processed in the designated FDIC regional office. Applications will be submitted directly to the FDIC regional office assigned supervisory responsibility for the group. The regulation makes no change in the location of the appropriate region for institutions that are not part of a group or when a group of related institutions are located within one region.

EFFECTIVE DATE: This rule is effective April 8, 1997.

FOR FURTHER INFORMATION CONTACT: Christopher J. Spoth, Examination Specialist, Division of Supervision (202) 898–6611; David K. Mangian, Regional Director, Division of Compliance and Consumer Affairs (312) 382–7550; Ken A. Quincy, Section Chief, Division of Compliance and Consumer Affairs (202) 942–3083; or Susan van den Toorn, Counsel, Legal Division (202) 898–8707.

SUPPLEMENTARY INFORMATION: The FDIC is amending 12 CFR 303.0(b)(12) regarding the definition of ''appropriate FDIC region'', ''appropriate FDIC regional office'', ''appropriate regional director'', ''appropriate deputy regional director'', and ''appropriate regional counsel'' (collectively, ''appropriate region'') to permit groups of related insured institutions to be supervised by a single FDIC regional office. With regard to an insured institution or proposed institution that is not or will not be part of a group of related institutions, the appropriate FDIC region will continue to be the FDIC region in which the institution is or will be located.

The amendment provides that the appropriate FDIC region for groups of related institutions will be the regional office in which the group's major policy and decision makers are located or any other region the FDIC designates on a case-by-case basis. In most cases involving related institutions, the appropriate FDIC region will be the region in which the headquarters of a lead institution or of a holding company is located. All supervisory matters, including applications and administrative actions, that involve insured institutions within a group of related institutions will be processed in the appropriate FDIC regional office.

The phrase ''group of related insured institutions'' is used in the amended definition because it provides necessary flexibility to designate the appropriate regional office for supervisory purposes. Other more specific terms, such as ''affiliates'', or ''subsidiaries of the same bank holding company'', or ''commonly controlled institutions'', were considered. However, such terms or phrases are used in other regulations and do not capture the array of ownership and control relationships which will be considered ''related'' for purposes of establishing one FDIC regional office as the appropriate region for supervising a group of related institutions. For example, the owners of a group of institutions that are to be supervised together may be individuals, bank and thrift holding companies, nonregulated parent companies, and foreign owners, or any combination of these elements in multiple ownership tiers. Institutions related through ownership by individuals or entities other than holding companies may be affected, even where they are not commonly ''controlled'' for other regulatory purposes (e.g., Regulation O (12 CFR part 215), Change in Bank Control Act). Similarly, the phrase ''major policy and decision makers are located'' is used to designate the location of the appropriate FDIC regional office because other terms, such as ''holding company headquarters'' or ''location of the lead institution'' may not accurately describe the location where a group of related institutions locates its top managing officials.

The provision to permit the FDIC to designate the appropriate regional office on a case-by-case basis is necessary to give the FDIC flexibility where using the location of the major policy and decision makers for determining the appropriate region is inappropriate or inefficient. The need for such language is demonstrated in the case of a foreign bank that operates several institutions in the United States, but whose headquarters, CEO, and major policy and decision makers are located in a foreign country. In such a case, the FDIC would have the discretion to select the most appropriate regional office to supervise the institutions located in the United States. Such flexibility is also needed in the case of a multibank holding company where major policy and decision makers are located in several FDIC regions. In such a case, the most logical region from a supervisory standpoint will be designated by DOS and DCA.

A letter to all insured institutions will announce the realignment of DOS and DCA's regional office responsibilities. A separate explanatory letter will also be sent to each institution that, as a result of the realignment, will be supervised by a newly designated FDIC regional office. In the event an institution which is part of a group of related institutions inadvertently files an application with the wrong FDIC regional office, the FDIC will forward the document to the appropriate regional office and notify the institution without penalizing the institution for a misdirected filing. Each regional office has information available to advise insured institutions, applicants, the public, other regulators, and any interested party regarding identification of an institution's assigned FDIC regional office.

The purpose of the realignment of FDIC regional office responsibilities and the amendment is to more efficiently supervise groups of related institutions by assigning responsibility for the group to one FDIC regional office based on the location of the group's major policy and decision makers. The prior part 303 language defines ''appropriate'' to mean that the FDIC supervises institutions from the region in which the institution is located, regardless of where the parent company or any related institution in a group is located or where the group's major policy and decision makers are located. Over time, with the trend toward industry consolidation and interstate banking, this approach has become cumbersome for both the FDIC and for groups of related institutions that operate, or seek to operate, in more than one FDIC region. In such cases, every FDIC region in which a related institution operates is directly involved in the group's business and regulatory affairs, resulting in potential duplication of supervisory efforts and disorder in multiple communication channels.

The changes to part 303 are being made to facilitate improved communications between insured institutions and the FDIC and to make better use of the FDIC's resources in processing applications and administrative actions for groups of related insured institutions. The changes do not create any insured institution publication requirements or impact the institution's or other respondent's right to challenge any action. The changes also do not impair access to the Board, to the extent it exists currently in part 303, for review of decisions on any application or administrative matter. The change in the appropriate region is procedural in nature. The designation of the FDIC office which will exercise overall supervision for purposes of receiving applications and deciding certain regulatory matters has no effect on the standards against which the merits of an application or administrative action are to be measured. In addition, any change as to the appropriate FDIC office in which overall supervisory functions will be assigned does not alter any of the rights or obligations of any institution or other respondent.

The FDIC is also eliminating the term ''appropriate regional manager'' from its definition because the term is no longer a designated title used by the FDIC.

Exemption From Public Notice and Comment

The amendments are being published in final form without opportunity for public comment under authority of 5 U.S.C. 553(b)(A) (Administrative Procedure Act) which exempts from required publication for comment interpretive rules, general statements of policy, and rules of agency practice and procedure. Specifically, the amendments relate to the FDIC's administrative and supervisory procedures concerning the designation of appropriate regional offices for purposes of filings and administrative actions. The amendments, which constitute nonsubstantive changes to the FDIC's Rules of Practice and Procedure, are being made immediately effective

inasmuch as the requirement found in 5 U.S.C. 553(d) that substantive rules be published not less than 30 days prior to their effective date is inapplicable.

Regulatory Flexibility Act

Under section 605(b) of the Regulatory Flexibility Act (RFA) (5 U.S.C. 605(b)), the final regulatory flexibility analysis otherwise required under section 604 of the RFA (5 U.S.C. 604) is not required if the head of the agency certifies that the rule will not have a significant economic impact on a substantial number of small entities and the agency publishes such certification in the **Federal Register** along with this general notice of proposed rulemaking or at the time of publication of the final rule.

The Board of Directors has concluded after reviewing the final regulation that it will not have a significant economic impact on a substantial number of small institutions since the only change, if any, may be the location in which the institution will make filings and from which the institution will be supervised by the FDIC. The Board of Directors therefore hereby certifies pursuant to section 605 of the RFA that the regulation will not have a significant economic impact on a substantial number of small entities within the meaning of the RFA.

Small Business Regulatory Enforcement Fairness Act

The Small Business Regulatory Enforcement Fairness Act of 1996 (SBREFA) (Public Law 104–121) provides generally for agencies to report rules to Congress and for Congress to review rules. This final rule is not a rule for purposes of SBREFA because it is a rule of agency organization pursuant to SBREFA, 5 U.S.C. 804(3)(c).

Paperwork Reduction Act

As these amendments neither alter existing nor create new record keeping or reporting requirements, the Paperwork Reduction Act is inapplicable.

Cost Benefit Analysis

This final rule is generally not expected to result in material increases in costs and burden to respondents. Some filers, however, will be required to file materials in a different location.

List of Subjects in 12 CFR Part 303

Administrative practice and procedure, Authority delegations (Government agencies), Bank deposit insurance, Banks, Banking, Reporting and recordkeeping requirements, Savings associations.

For the reasons set forth in the preamble, 12 CFR part 303 is amended as set forth below:

PART 303—APPLICATIONS, REQUESTS, SUBMITTALS, DELEGATIONS OF AUTHORITY, AND NOTICES REQUIRED TO BE FILED BY STATUTE OR REGULATION

1. The authority citation for part 303 continues to read as follows:

Authority: 12 U.S.C. 378, 1813, 1815, 1816, 1817(j), 1818, 1819 (Seventh and Tenth), 1828, 1831e, 1831o, 1831p–1; 15 U.S.C. 1607.

2. In § 303.0, paragraph (b)(12) is revised to read as follows:

§ 303.0 Scope and definitions.

* * * * *

(b) * * *

(12) Appropriate FDIC region, appropriate FDIC regional office, appropriate regional director, appropriate deputy regional director, and *appropriate regional counsel* shall refer to the FDIC region, and the FDIC regional office, regional director, deputy regional director, and regional counsel, of the FDIC region, which the FDIC designates as follows:

(i) When an institution or proposed institution that is the subject of an application, request, submittal, notice, or administrative action is not or will not be part of a group of related institutions, the appropriate region for the institution and any individual associated with the institution is the FDIC region in which the institution or proposed institution is or will be located; or

(ii) When an institution or proposed institution that is the subject of an application, request, submittal, notice, or administrative action is or will be part of a group of related institutions, the appropriate region for the institution and any individual associated with the institution is the FDIC region in which the group's major policy and decision makers are located, or any other region the FDIC designates on a case-by-case basis.

* * * * *

By Order of the Board of Directors.

Dated at Washington, D.C., this 25th day of March, 1997.

Federal Deposit Insurance Corporation

Robert E. Feldman,

Deputy Executive Secretary.

[FR Doc. 97–8827 Filed 4–7–97; 8:45 am]

BILLING CODE 6714–01–P

DEPARTMENT OF TRANSPORTATION

Federal Aviation Administration

14 CFR Part 39

[Docket No. 95–NM–234–AD; Amendment 39–9986; AD 97–07–12]

RIN 2120–AA64

Airworthiness Directives; McDonnell Douglas Model MD–11 and DC–10 Series Airplanes, and KC–10A (Military) Airplanes

AGENCY: Federal Aviation Administration, DOT.

ACTION: Final rule.

SUMMARY: This amendment supersedes an existing airworthiness directive (AD) that is applicable to certain McDonnell Douglas Model MD–11 and DC–10 series airplanes, and KC–10A (military) airplanes. That AD currently requires functional testing to verify proper installation of the electrical connectors to the engine generator and fire bell shutoff switches, and correction of the installation, if necessary. This amendment requires installation of a modification that terminates the requirement to perform repetitive functional tests. This amendment is prompted by the development of a modification that minimizes the possibility of improperly connecting (crossing) the electrical connectors to the fire extinguishing handles. The actions specified by this amendment are intended to prevent the wrong engine-driven generator from being shut down unnecessarily in the event of an engine fire warning.

DATES: Effective May 13, 1997.

The incorporation by reference of certain publications listed in the regulations is approved by the Director of the Federal Register as of May 13, 1997.

ADDRESSES: The service information referenced in this AD may be obtained from McDonnell Douglas Corporation, 3855 Lakewood Boulevard, Long Beach, California 90846, Attention: Technical Publications Business Administration, Department C1-L51 (2–60). This information may be examined at the Federal Aviation Administration (FAA), Transport Airplane Directorate, Rules Docket, 1601 Lind Avenue, SW., Renton, Washington; or at the FAA, Transport Airplane Directorate, Los Angeles Aircraft Certification Office, 3960 Paramount Boulevard, Lakewood, California; or at the Office of the Federal Register, 800 North Capitol Street, NW., suite 700, Washington, DC.

FOR FURTHER INFORMATION CONTACT: Raymond Vakili, Aerospace Engineer, Propulsion Branch, ANM–140L, FAA, Los Angeles Aircraft Certification Office, 3960 Paramount Boulevard, Lakewood, California 90712; telephone (310) 627–5262; fax (310) 627–5210.

SUPPLEMENTARY INFORMATION: A proposal to amend part 39 of the Federal Aviation Regulations (14 CFR part 39) by superseding AD 93–25–09 R1, amendment 39–9070 (59 FR 56383, November 14, 1994), which is applicable to certain McDonnell Douglas Model MD–11 and DC–10 series airplanes, and KC–10A (military) airplanes, was published in the **Federal Register** as a supplemental notice of proposed rulemaking (NPRM) on November 12, 1996 (61 FR 58012). The existing AD currently requires functional testing to verify proper installation of the electrical connectors to the engine generator and fire bell shutoff switches, and correction of the installation, if necessary. The supplemental NPRM proposed to require the installation of a modification that would terminate the requirement to perform repetitive functional tests.

Interested persons have been afforded an opportunity to participate in the making of this amendment. Due consideration has been given to the comments received.

Support for the Proposal

Several commenters support the proposed AD.

Request to Extend Compliance Time

One commenter requests that the compliance time for installation of the modification be extended from the proposed 24 months to 36 months. This commenter, a U.S. operator of affected airplanes, requests this extension so that the modification can be installed during one of this operator's regularly scheduled maintenance intervals. Adoption of the proposed compliance time of 24 months would require this operator to schedule special times for the accomplishment of the modification, at additional expense and downtime.

The FAA does not concur with the commenter's request to extend the compliance time. The operator provided no technical justification for revising this interval as requested. Further, in developing an appropriate compliance time for this action, the FAA considered the safety implications, parts availability, and normal maintenance schedules for timely accomplishment of the modification. In consideration of these items, the FAA has determined that 24 months represents an appropriate interval of time allowable in which the modifications can be accomplished during scheduled maintenance intervals for the majority of affected operators, and an acceptable level of safety can be maintained. However, paragraph (f) of the final rule does provide affected operators the opportunity to apply for an adjustment of the compliance time if sufficient data are presented to justify such an adjustment.

Request to Delete System Functional Test Prior to Modification

One commenter objects to the need to verify the extinguishing system's integrity by accomplishing engine run checks immediately prior to the installation of the terminating modification. This check procedure is specified in the referenced McDonnell Douglas Service Bulletin DC10–26–047 (both the original issue and Revision 1) as the first step to be performed on unmodified airplanes prior to installing the tethers on the engine generator and fire bell shutoff switches. This commenter maintains that the integrity of the system has already been established if the operator has been accomplishing the repetitive checks after any system maintenance, as is currently required by AD 93–25–09 R1. The commenter considers that the need to reconfirm the system's integrity is not justified.

The FAA concurs. The FAA has determined that as long as a functional test has been accomplished in accordance with AD 93–25–09 R1, or in accordance with paragraph (a), (b), or (c) of this final rule, there is no need to perform the additional test of the system just prior to installing the modification. A new paragraph (e) has been added to this final rule to indicate this.

Request to Rely on Maintenance Actions to Correct Unsafe Condition

One commenter has no technical objection to the proposal, but suggests that current maintenance practices are sufficient to identify a discrepant connection. The commenter points out that maintenance tasks are now in place in the revised maintenance manual that will enable a cross connection condition to be readily identified.

The FAA does not concur. Service experience has demonstrated that maintenance alone cannot be relied upon to correct what has been determined to be a design deficiency. Reliance on maintenance to correct for a design deficiency increases the risk of introducing maintenance error and defeats the purpose of what it was meant to serve. Moreover, the installation of the modification required by this AD (at a one-time per-airplane cost of only $180 to $210 per airplane) will eliminate the need to rely on numerous long term and costly maintenance tasks.

Conclusion

After careful review of the available data, including the comments noted above, the FAA has determined that air safety and the public interest require the adoption of the rule with the change previously described. The FAA has determined that this change will neither increase the economic burden on any operator nor increase the scope of the AD.

Cost Impact

There are approximately 100 Model MD–11 airplanes, and 426 Model DC–10 series and KC–10A (military) airplanes, of the affected design in the worldwide fleet. The FAA estimates that 30 Model MD–11 airplanes, and 239 Model DC–10 series and KC–10A (military) airplanes of U.S. registry will be affected by this proposed AD.

For U.S.-registered Model MD–11 airplanes: The checks that are currently required by AD 93–25–09 R1 (and retained by this new AD action) take approximately 0.5 work hour per airplane to accomplish, at an average labor rate of $60 per work hour. Based on these figures, the cost impact of the actions currently required on U.S. operators of Model MD–11 airplanes is estimated to be $900, or $30 per airplane, per check.

The terminating modification that is required by this AD action will take approximately 3 work hours per airplane to accomplish, at an average labor rate of $60 per work hour. The cost of required parts is expected to be negligible. Based on these figures, the cost impact of the modification requirements of this AD on U.S. operators of Model MD–11 airplanes is estimated to be $3,240, or $180 per airplane.

For U.S.-registered Model DC–10 series and KC–10A (military) airplanes: The checks that are currently required by AD 93–25–09 R1 (and retained by this new AD action) take approximately 0.5 work hour per airplane to accomplish, at an average labor rate of $60 per work hour. Based on these figures, the cost impact of the actions currently required on U.S. operators of these models of airplanes is estimated to be $7,170, or $30 per airplane, per check.

The terminating modification that is required by this AD action will take an average of 3.5 work hours per airplane to accomplish, at an average labor rate

of $60 per work hour. The cost of required parts is expected to be negligible. Based on these figures, the cost impact of the modification requirements of this AD on U.S. operators of these models of airplanes is estimated to be $50,190, or $210 per airplane.

The cost impact figures discussed above are based on assumptions that no operator has yet accomplished any of the requirements of this AD action, and that no operator would accomplish those actions in the future if this AD were not adopted.

Regulatory Impact

The regulations adopted herein will not have substantial direct effects on the States, on the relationship between the national government and the States, or on the distribution of power and responsibilities among the various levels of government. Therefore, in accordance with Executive Order 12612, it is determined that this final rule does not have sufficient federalism implications to warrant the preparation of a Federalism Assessment.

For the reasons discussed above, I certify that this action (1) is not a ''significant regulatory action'' under Executive Order 12866; (2) is not a ''significant rule'' under DOT Regulatory Policies and Procedures (44 FR 11034, February 26, 1979); and (3) will not have a significant economic impact, positive or negative, on a substantial number of small entities under the criteria of the Regulatory Flexibility Act. A final evaluation has been prepared for this action and it is contained in the Rules Docket. A copy of it may be obtained from the Rules Docket at the location provided under the caption **ADDRESSES**.

List of Subjects in 14 CFR Part 39

Air transportation, Aircraft, Aviation safety, Incorporation by reference, Safety.

Adoption of the Amendment

Accordingly, pursuant to the authority delegated to me by the Administrator, the Federal Aviation Administration amends part 39 of the Federal Aviation Regulations (14 CFR part 39) as follows:

PART 39—AIRWORTHINESS DIRECTIVES

1. The authority citation for part 39 continues to read as follows:

Authority: 49 U.S.C. 106(g), 40113, 44701.

§ 39.13 [Amended]

2. Section 39.13 is amended by removing amendment 39–9070 (59 FR 56383, November 14, 1994), and by adding a new airworthiness directive (AD), amendment 39–9986, to read as follows:

97–07–12 McDonnell Douglas: Amendment 39–9986. Docket 95–NM–234–AD. Supersedes AD 93–25–09 R1, Amendment 39–9070.

Applicability: Model MD–11 series airplanes as listed in McDonnell Douglas MD–11 Alert Service Bulletin A26–16, dated November 22, 1993; and Model DC–10 series airplanes and KC–10A (military) airplanes as listed in McDonnell Douglas DC–10/KC–10A Alert Service Bulletin A26–46, dated December 6, 1993; certificated in any category.

Note 1: This AD applies to each airplane identified in the preceding applicability provision, regardless of whether it has been otherwise modified, altered, or repaired in the area subject to the requirements of this AD. For airplanes that have been modified, altered, or repaired so that the performance of the requirements of this AD is affected, the owner/operator must request approval for an alternative method of compliance in accordance with paragraph (f) of this AD. The request should include an assessment of the effect of the modification, alteration, or repair on the unsafe condition addressed by this AD; and, if the unsafe condition has not been eliminated, the request should include specific proposed actions to address it.

Compliance: Required as indicated, unless accomplished previously.

To prevent the wrong engine-driven generator from being shut down unnecessarily in the event of an engine fire warning, accomplish the following:

(a) As of January 7, 1994 (the effective date of AD 93–25–09, amendment 39–8775), prior to further flight following any maintenance performed on the fire extinguishing handle system, perform a functional test to verify proper installation of the electrical connectors to the engine generator and fire bell shutoff switches in accordance with the Accomplishment Instructions of McDonnell Douglas MD–11 Alert Service Bulletin A26–16, dated November 22, 1993 (for Model MD–11 series airplanes); or McDonnell Douglas DC–10/KC–10A Alert Service Bulletin A26–46, dated December 6, 1993 [for Model DC–10 series airplanes, and KC–10A (military) airplanes]; as applicable.

(b) If the electrical connectors are found to be properly installed, repeat the functional test thereafter prior to further flight following any maintenance performed on the fire extinguishing handle system, until the requirements of paragraph (d) of this AD are accomplished.

(c) If the electrical connectors are found to be improperly installed, prior to further flight, correct the wiring installation and repeat the functional test, in accordance with the Accomplishment Instructions of McDonnell Douglas MD–11 Alert Service Bulletin A26–16, dated November 22, 1993 (for Model MD–11 series airplanes); or McDonnell Douglas DC–10/KC–10A Alert Service Bulletin A26–46, dated December 6, 1993 [for Model DC–10 series airplanes, and KC–10A (military) airplanes]; as applicable. Thereafter, repeat the functional test prior to further flight following any maintenance performed on the fire extinguishing handle system, until the requirements of paragraph (d) of this AD are accomplished.

(d) Except as provided by paragraph (e) of this AD: Within 24 months after the effective date of this AD, install tethers on the engine generator and fire bell shutoff system and firex bottle electrical connectors, in accordance with McDonnell Douglas Service Bulletin MD11–26–018, dated August 24, 1995 (for Model MD–11 series airplanes); or McDonnell Douglas Service Bulletin DC10–26–047, Revision 1, dated August 22, 1996 [for Model DC–10 series airplanes and KC–10A (military) airplanes]; as applicable. Accomplishment of this installation constitutes terminating action for the functional tests required by this AD.

(e) For those airplanes on which a functional test has been accomplished in accordance with either AD 93–25–09 R1, amendment 39–9070; or paragraph (a), (b), or (c) of this AD: The functional test specified in the ''Test'' procedures in paragraph 3.B. of the Accomplishment Instructions of McDonnell Douglas Service Bulletin MD11–26–018, dated August 24, 1995 (for Model MD–11 series airplanes); or McDonnell Douglas Service Bulletin DC10–26–047, Revision 1, dated August 22, 1996 [for Model DC–10 series airplanes and KC–10A (military) airplanes] need not be performed.

(f) An alternative method of compliance or adjustment of the compliance time that provides an acceptable level of safety may be used if approved by the Manager, Los Angeles Aircraft Certification Office (ACO), FAA, Transport Airplane Directorate. Operators shall submit their requests through an appropriate FAA Principal Maintenance Inspector, who may add comments and then send it to the Manager, Los Angeles ACO.

Note 2: Information concerning the existence of approved alternative methods of compliance with this AD, if any, may be obtained from the Los Angeles ACO.

(g) Special flight permits may be issued in accordance with sections 21.197 and 21.199 of the Federal Aviation Regulations (14 CFR 21.197 and 21.199) to operate the airplane to a location where the requirements of this AD can be accomplished.

(h) The functional tests shall be done in accordance with McDonnell Douglas MD–11 Alert Service Bulletin A26–16, dated November 22, 1993 (for Model MD–11 series airplanes); or McDonnell Douglas DC–10/KC–10A Alert Service Bulletin A26–46, dated December 6, 1993 [for Model DC–10 series airplanes, and KC–10A (military) airplanes]; as applicable. This incorporation by reference was approved previously by the Director of the Federal Register, in accordance with 5 U.S.C. 552(a) and 1 CFR part 51, as of November 29, 1994 (59 FR 56383, November 14, 1994). The installation shall be done in accordance with McDonnell Douglas Service Bulletin MD11–26–018, dated August 24, 1995 (for Model MD–11 series airplanes); or McDonnell Douglas Service Bulletin DC10–26–047, Revision 1, dated August 22, 1996 [for Model DC–10 series airplanes and KC–10A (military) airplanes]; as applicable. This incorporation

by reference was approved by the Director of the Federal Register in accordance with 5 U.S.C. 552(a) and 1 CFR part 51. Copies may be obtained from McDonnell Douglas Corporation, 3855 Lakewood Boulevard, Long Beach, California 90846, Attention: Technical Publications Business Administration, Department C1-L51 (2–60). Copies may be inspected at the FAA, Transport Airplane Directorate, 1601 Lind Avenue, SW., Renton, Washington; or at the FAA, Transport Airplane Directorate, Los Angeles Aircraft Certification Office, 3960 Paramount Boulevard, Lakewood, California; or at the Office of the Federal Register, 800 North Capitol Street, NW., suite 700, Washington, DC.

(i) This amendment becomes effective on May 13, 1997.

Issued in Renton, Washington, on March 27, 1997.

S.R. Miller,

Acting Manager, Transport Airplane Directorate, Aircraft Certification Service.

[FR Doc. 97–8424 Filed 4–7–97; 8:45 am]

BILLING CODE 4910–13–U

DEPARTMENT OF TRANSPORTATION

Federal Aviation Administration

14 CFR Part 39

[Docket No. 96–CE–19–AD; Amendment 39–9990; AD 97–08–02]

RIN 2120–AA64

Airworthiness Directives; Schempp-Hirth K.G. Models Standard-Cirrus, Nimbus-2, Nimbus-2B, Mini-Nimbus HS–7, Mini-Nimbus B, Discus a, and Discus b Sailplanes

AGENCY: Federal Aviation Administration, DOT.

ACTION: Final rule.

SUMMARY: This amendment adopts a new airworthiness directive (AD) that applies to certain Schempp-Hirth K.G. (Schempp-Hirth) Models Standard-Cirrus, Nimbus-2, Nimbus-2B, Mini-Nimbus HS–7, Mini-Nimbus B, Discus a, and Discus b sailplanes. This AD requires accomplishing a load test of the elevator control system, and replacing the elevator vertical actuating tube either immediately or at a certain time period depending on the results of the load test. This AD results from reported incidents of corrosion found in the elevator because of water entering the elevator control rod. The actions specified by this AD are intended to prevent corrosion in the elevator caused by water entering the elevator control rod, which could result in elevator failure and subsequent loss of control of the sailplane.

DATES: Effective May 30, 1997.

The incorporation by reference of certain publications listed in the regulations is approved by the Director of the Federal Register as of May 30, 1997.

ADDRESSES: Service information that applies to this AD may be obtained from Schempp-Hirth Flugzeugbau GmbH, Krebenstrasse 25, Postfach 1443, D–73230 Kircheim/Teck, Germany. This information may also be examined at the Federal Aviation Administration (FAA), Central Region, Office of the Assistant Chief Counsel, Attention: Rules Docket 96–CE–19–AD, Room 1558, 601 E. 12th Street, Kansas City, Missouri 64106; or at the Office of the Federal Register, 800 North Capitol Street, NW., suite 700, Washington, DC.

FOR FURTHER INFORMATION CONTACT: Mr. J. Mike Kiesov, Project Officer, FAA, Small Airplane Directorate, 1201 Walnut, suite 900, Kansas City, Missouri 64106; telephone (816) 426–6932; facsimile (816) 426–2169.

SUPPLEMENTARY INFORMATION:

Events Leading to the Issuance of This AD

A proposal to amend part 39 of the Federal Aviation Regulations (14 CFR part 39) to include an AD that would apply to certain Schempp-Hirth Models Standard-Cirrus, Nimbus-2, Nimbus-2B, Mini-Nimbus HS–7, Mini-Nimbus B, Discus a, and Discus b sailplanes was published in the **Federal Register** as a notice of proposed rulemaking (NPRM) on November 5, 1996 (61 FR 56921). The NPRM proposed to require accomplishing a load test of the elevator control system, and replacing the elevator vertical actuating tube either immediately or at a certain time period depending on the results of the load test. Accomplishment of the proposed actions as specified in the NPRM would be in accordance with Schempp-Hirth Technical Note No. 278–33, 286–28, 295-22, 328–10, 349–16, 360–9, 373–5, dated November 19, 1992, and the Appendix to this technical note.

The NPRM resulted from reported incidents of corrosion found in the elevator because of water entering the elevator control rod.

Interested persons have been afforded an opportunity to participate in the making of this amendment. No comments were received on the proposed AD or the FAA's determination of the cost to the public.

The FAA's Determination

After careful review of all available information related to the subject presented above, the FAA has determined that air safety and the public interest require the adoption of the AD as proposed except for minor editorial corrections. The FAA has determined that these minor corrections will not change the meaning of the AD and will not add any additional burden upon the public than was already proposed.

Compliance Time of the AD

The compliance time of the replacement required by this AD is presented in calendar time instead of hours time-in-service. The FAA has determined that a calendar time for compliance would be the most desirable method because the unsafe condition of the elevator control system is caused by corrosion. Corrosion can occur in the areas of the elevator control system of the affected sailplanes, regardless of whether the sailplane is in service.

Cost Impact

The FAA estimates that 167 sailplanes in the U.S. registry will be affected by this AD, that it will take approximately 3 workhours per sailplane to accomplish the required action, and that the average labor rate is approximately $60 an hour. Parts cost approximately $40 per sailplane. Based on these figures, the total cost impact of the proposed AD on U.S. sailplane operators is estimated to be $36,740. This figure is based on the presumption that no owner/operator of the affected sailplanes has accomplished the required replacement.

Schempp-Hirth has informed the FAA that parts have been distributed to equip approximately 53 sailplanes. Presuming that each set of parts is incorporated on an affected sailplane, the cost impact upon U.S. sailplane owners/operators is reduced by $11,660 from $36,740 to $25,080.

In addition, the above figure is based only on the replacement costs; it does not take into account the cost of the load test. An owner/operator of an affected sailplane is allowed to accomplish this load test so the only cost involved is the time it takes the owner/operator to accomplish this test.

Regulatory Impact

The regulations adopted herein will not have substantial direct effects on the States, on the relationship between the national government and the States, or on the distribution of power and responsibilities among the various levels of government. Therefore, in accordance with Executive Order 12612, it is determined that this final rule does not have sufficient federalism implications to warrant the preparation of a Federalism Assessment.

For the reasons discussed above, I certify that this action (1) is not a ''significant regulatory action'' under Executive Order 12866; (2) is not a ''significant rule'' under DOT Regulatory Policies and Procedures (44 FR 11034, February 26, 1979); and (3) will not have a significant economic impact, positive or negative, on a substantial number of small entities under the criteria of the Regulatory Flexibility Act. A copy of the final evaluation prepared for this action is contained in the Rules Docket. A copy of it may be obtained by contacting the Rules Docket at the location provided under the caption **ADDRESSES**.

List of Subjects in 14 CFR Part 39

Air transportation, Aircraft, Aviation safety, Incorporation by reference, Safety.

Adoption of the Amendment

Accordingly, pursuant to the authority delegated to me by the Administrator, the Federal Aviation Administration amends part 39 of the Federal Aviation Regulations (14 CFR part 39) as follows:

PART 39—AIRWORTHINESS DIRECTIVES

1. The authority citation for part 39 continues to read as follows:

Authority: 49 USC 106(g), 40113, 44701.

§39.13 [Amended]

2. Section 39.13 is amended by adding a new airworthiness directive (AD) to read as follows:

97–08–02 **Schempp-Hirth K.G:**

Amendment 39–9990; Docket No. 96–CE–19–AD.

Applicability: The following sailplane models and serial numbers, certificated in any category:

Models and Serial numbers:

Standard-Cirrus—all serial numbers.

Nimbus–2 and Nimbus–2B—all serial numbers.

Mini-Nimbus HS–7 and Mini-Nimbus B—serial numbers 1 to 159.

Discus a and Discus b—serial numbers 1 to 446.

Note 1: This AD applies to each sailplane identified in the preceding applicability provision, regardless of whether it has been modified, altered, or repaired in the area subject to the requirements of this AD. For sailplanes that have been modified, altered, or repaired so that the performance of the requirements of this AD is affected, the owner/operator must request approval for an alternative method of compliance in accordance with paragraph (f) of this AD.

The request should include an assessment of the effect of the modification, alteration, or repair on the unsafe condition addressed by this AD; and, if the unsafe condition has not been eliminated, the request should include specific proposed actions to address it.

Compliance: Required as indicated in the body of this AD, unless already accomplished.

To prevent corrosion in the elevator caused by water entering the elevator control rod, which could result in elevator failure and subsequent loss of control of the sailplane, accomplish the following:

(a) Prior to further flight after the effective date of this AD, accomplish a load test of the elevator control system in accordance with Schempp-Hirth Technical Note No. 278–33, 286–28, 295–22, 328–10, 349–16, 360–9, 373–5, dated November 19, 1992, and the Appendix to this technical note.

Note 2: Sections 61.107 (d)(1) and 61.127 (d)(1) of the Federal Aviation Regulations (14 CFR 61.107 (d)(1) and 14 CFR 61.127 (d)(1)) give the authorization for glider/sailplane operators to disassemble and reassemble the elevator control system (for storage purposes between flights). The ''prior to further flight after the effective date of this AD'' compliance time in paragraph (a) of this AD was established to coincide with the next reassembly of the elevator control system.

(b) If any discrepancies are found during the load test required by paragraph (a) of this AD, prior to further flight, replace the elevator vertical actuating tube in accordance with Schempp-Hirth Technical Note No. 278–33, 286–28, 295–22, 328–10, 349–16, 360–9, 373–5, dated November 19, 1992, and the Appendix to this technical note.

(c) Within the next six calendar months after the effective date of this AD, unless already accomplished (performing the actions in paragraph (b) of this AD), replace the elevator vertical actuating tube in accordance with Schempp-Hirth Technical Note No. 278–33, 286–28, 295–22, 328–10, 349–16, 360–9, 373–5, dated November 19, 1992, and the Appendix to this technical note.

(d) The elevator control system load test as required by paragraph (a) of this AD may be performed by the sailplane owner/operator holding at least a private pilot certificate as authorized by section 43.7 of the Federal Aviation Regulations (14 CFR 43.7), and must be entered into the aircraft records showing compliance with this AD in accordance with section 43.11 of the Federal Aviation Regulations (14 CFR 43.11).

(e) Special flight permits may be issued in accordance with sections 21.197 and 21.199 of the Federal Aviation Regulations (14 CFR 21.197 and 21.199) to operate the sailplane to a location where the requirements of this AD can be accomplished.

(f) An alternative method of compliance or adjustment of the compliance times that provides an equivalent level of safety may be approved by the Manager, Small Airplane Directorate, FAA, 1201 Walnut, suite 900, Kansas City, Missouri 64106. The request shall be forwarded through an appropriate FAA Maintenance Inspector, who may add comments and then send it to the Manager, Small Airplane Directorate.

Note 3: Information concerning the existence of approved alternative methods of compliance with this AD, if any, may be obtained from the Small Airplane Directorate.

(g) The load test and replacement required by this AD shall be done in accordance with Schempp-Hirth Technical Note No. 278–33, 286–28, 295–22, 328–10, 349–16, 360–9, 373–5, dated November 19, 1992, and the Appendix to this technical note. This incorporation by reference was approved by the Director of the Federal Register in accordance with 5 U.S.C. 552(a) and 1 CFR part 51. Copies may be obtained from Schempp-Hirth Flugzeugbau GmbH, Krebenstrasse 25, Postfach 1443, D–73230 Kircheim/Teck, Germany. Copies may be inspected at the FAA, Central Region, Office of the Assistant Chief Counsel, Room 1558, 601 E. 12th Street, Kansas City, Missouri, or at the Office of the Federal Register, 800 North Capitol Street, NW., suite 700, Washington, DC.

(h) This amendment (39–9990) becomes effective on May 30, 1997.

Issued in Kansas City, Missouri, on April 1, 1997.

Henry A. Armstrong,

Acting Manager, Small Airplane Directorate, Aircraft Certification Service.

[FR Doc. 97–8836 Filed 4–7–97; 8:45 am]

BILLING CODE 4910–13–U

DEPARTMENT OF TRANSPORTATION

Federal Aviation Administration

14 CFR Part 71

[Airspace Docket No. 97–ASO–6]

Amendment of Class E2 Airspace; Brunswick Malcolm-McKinnon Airport, GA

AGENCY: Federal Aviation Administration (FAA), DOT.

ACTION: Final rule; request for comments.

SUMMARY: This amendment modifies the Class E2 airspace at Brunswick Malcom-McKinnon Airport, GA from continuous to part time, as the required weather observations for Class E2 surface area airspace have been reduced from 24 to 16 hours a day. Therefore, the Class E2 airspace must be amended to reflect its part time status. During the times the Class E2 surface area airspace is not effective, the airspace below 700 feet AGL becomes Class G, uncontrolled airspace. A NOTAM establishing the effective days and times of this airspace will be issued. The effective days and times will thereafter be continuously published in the Airport/Facility Directory.

DATES: *Effective Date:* 0901 UTC, July 17, 1997. *Comment Date:* Comments must be received on or before May 19, 1997.

ADDRESSES: Send comments in triplicate to: Federal Aviation Administration, Docket No. 97–ASO–6, Manager, Operations Branch, ASO–530, P.O. Box 20636, Atlanta, Georgia 30320.

The official docket may be examined in the Office of the Assistant Chief Counsel for Southern Region, Room 550, 1701 Columbia Avenue, College Park, Georgia 30337, telephone (404) 305–5586.

FOR FURTHER INFORMATION CONTACT: Benny L. McGlamery, Operations Branch, Air Traffic Division, Federal Aviation Administration, P.O. Box 20636, Atlanta, Georgia 30320; telephone (404) 305–5570.

SUPPLEMENTARY INFORMATION:

Request for Comments on the Rule

Although this action is a final rule, which involves modifying the Class E2 surface area airspace at the Brunswick Malcolm-McKinnon Airport, GA, from continuous to part time, comments are invited on the rule. This rule will become effective on the date specified in the **DATES** section. However, after the review of any comments and, if the FAA finds that further changes are appropriate, it will initiate rulemaking proceedings to extend the effective date or to amend the regulation.

Comments that provide the factual basis supporting the views and suggestions presented are particularly helpful in evaluating the effects of the rule and in determining whether additional rulemaking is needed. Comments are specifically invited on the overall regulatory, aeronautical, economic, environmental, and energy-related aspects of the rule that might suggest the need to modify the rule.

The Rule

This amendment to Part 71 of the Federal Aviation Regulations (14 CFR part 71) modifies Class E2 surface area airspace at Brunswick Malcolm-McKinnon Airport, GA, from continuous to part time.

This action lessens the impact on users of this airspace. Class E2 airspace designations are published in Paragraph 6002 of FAA Order 7400.9D dated September 4, 1996, and effective September 16, 1996. The Class E2 airspace designation listed in this document will be published subsequently in the Order.

Under the circumstances presented, the FAA concludes that there is an immediate need to modify the Class E2 airspace at the Brunswick Malcolm-McKinnon Airport, GA, from continuous to part time, to ensure that users of this airspace will be able to comply with appropriate federal regulations governing non-controlled airspace. Therefore, I find that notice and public procedure under 5 U.S.C. 553(b) are impracticable and contrary to the public interest.

The FAA has determined that this regulation only involves an established body of technical regulations for which frequent and routine amendments are necessary to keep them operationally current. It, therefore, (1) is not a ''significant regulatory action'' under Executive Order 12866; (2) is not a ''significant rule'' under DOT Regulatory Policies and Procedures (44 FR 11034; February 26, 1979); and (3) does not warrant preparation of a regulatory evaluation as the anticipated impact is so minimal. Since this is a routine matter that will only affect air traffic procedures and air navigation, it is certified that this rule will not have a significant economic impact on a substantial number of small entities under the criteria of the Regulatory Flexibility Act.

List of Subjects in 14 CFR Part 71

Airspace, Incorporation by reference, Navigation (air).

Adoption of the Amendment

In consideration of the foregoing, the Federal Aviation Administration amends 14 CFR Part 71 as follows:

PART 71—[AMENDED]

1. The authority citation for 14 CFR Part 71 continues to read as follows:

Authority: 49 U.S.C. 106(g); 40103, 40113, 40120; EO 10854, 24 FR 9565, 3 CFR, 1959–1963 Comp., p. 389; 14 CFR 11.69.

§ 71.1 [Amended]

2. The incorporation by reference in 14 CFR 71.1 of Federal Aviation Administration Order 7400.9D, Airspace Designations and Reporting Points, dated September 4, 1996, and effective September 16, 1996, is amended as follows:

Paragraph 6002 Class E airspace areas designated as a surface area for an airport.

* * * * *

ASO GA E2 Brunswick Malcolm-McKinnon Airport, GA [Revised]

Brunswick, Malcolm-McKinnon Airport, GA
(Lat. 31°09′08″ N, long. 81°23′29″ W)
McKinnon NDB
(Lat. 31°09′13″ N, long. 81°23′22″ W)
Glynco Jetport
(Lat. 31°15′33″ N, long. 81°27′58″ W)

Within a 4-mile radius of Malcolm-McKinnon Airport and within 3 miles each side of the 221° and 032° bearings from the McKinnon NDB and extending from the 4-mile radius to 7 miles southwest and northeast of the NDB. This Class E airspace area is effective during the days and times established in advance by a Notice to Airmen. The effective days and times will thereafter be continuously published in the Airport/Facility Directory.

* * * * *

Issued in College Park, Georgia, on March 24, 1997.

Wade T. Carpenter,

Acting Manager, Air Traffic Division, Southern Region.

[FR Doc. 97–8615 Filed 4–7–97; 8:45 am]

BILLING CODE 4910–13–M

FEDERAL TRADE COMMISSION

16 CFR Part 23

Guides for the Jewelry, Precious Metals, and Pewter Industries

AGENCY: Federal Trade Commission.

ACTION: Final guides.

SUMMARY: The Federal Trade Commission (the ''Commission'') announces that it has concluded a review of Section 23.7 of the Guides for the Jewelry, Precious Metals, and Pewter Industries (''the Guides''), 16 CFR Part 23. Section 23.7 of the Guides addresses claims about platinum products. In a separate **Federal Register** Notice (''FRN''), dated May 30, 1996, the Commission announced revisions to other sections of the Guides.[1] That FRN did not change the section regarding platinum products, but instead requested additional comments on possible revisions to that section.[2] The Commission has now revised the section to simplify it and to bring its guidance into closer accord with international standards.

EFFECTIVE DATE: April 8, 1997.

ADDRESSES: Requests for copies of this document should be sent to the Public Reference Branch, Room 130, Federal Trade Commission, Washington, DC 20580.

FOR FURTHER INFORMATION CONTACT: Constance M. Vecellio, Attorney, (202) 326–2966, or Robin P. Rosen, Attorney, (202) 326–3740, Division of Enforcement, Federal Trade Commission, Washington, DC 20580.

SUPPLEMENTARY INFORMATION:

I. Introduction

The Commission is revising section 7 of the Guides for the Jewelry, Precious Metals, and Pewter Industries, 16 CFR 23.7, as described in detail below. The Commission published an FRN

[1] 61 FR 27178 *et seq.* (May 30, 1996).

[2] 61 FR 27224 (May 30, 1996).

soliciting public comment on amendments to the Guides on June 12, 1992, in response to a petition from the Jewelers Vigilance Committee, Inc. (''JVC'').[3] The comment period, as extended, ended on September 25, 1992.[4] The JVC petition proposed some changes to the platinum section of the Guides. The comments also indicated a need to simplify Commission guidance regarding platinum and bring this guidance into closer accord with international standards. In addition, on November 30, 1995, the JVC and the Platinum Guild International submitted a request for an advisory opinion regarding platinum markings that differed from the previous JVC proposal. The Commission concluded that additional comment would be helpful to resolve certain issues and published an FRN soliciting public comment on amendments to section 7 of the Guides on May 30, 1996.[5] The comment period, as extended, ended on September 30, 1996.

The May 30, 1996 FRN solicited comment on several proposals to revise section 7 of the Guides. The FRN summarized the major amendments proposed, as well as revisions that Commission staff proposed. In addition to requesting comment on the proposals described, the FRN asked for comment on nine specific questions.

The Commission received 806 comments.[6] In the remainder of this notice, the comments are cited to by an abbreviation of the commenter's name and the document number assigned to the comment on the public record. A list of the commenters, including the abbreviations and the document numbers used to identify each commenter, is attached as an Appendix.

Below, the Commission describes the comments and discusses its revisions to section 7 of the Guides.

II. Background

Section 7 of the current Guides states that it is an unfair trade practice to use the words ''platinum,'' ''iridium,'' ''palladium,'' ''ruthenium,'' ''rhodium,'' or ''osmium,'' or any abbreviations thereof, in a way likely to deceive purchasers as to the true composition of the product. The Commission has retained this provision of section 7, designated it as subsection (a), and added a sentence stating that platinum, iridium, palladium, ruthenium, rhodium, and osmium are the platinum group metals (''PGM''), because not every reader of the Guides will be familiar with the term ''platinum group metal.''[7]

The current Guides state, in a Note, that markings in compliance with Commercial Standard CS 66–38 (now Voluntary Product Standard (''VPS'') 69–76) on the ''Marking of Articles Made Wholly or in Part of Platinum'' will be regarded ''as among those fulfilling the requirements relating thereto which are contained in this section.''[8] The VPS provide for four different markings for articles containing platinum. The markings differ based on the relative parts per thousand of pure platinum versus PGM.

(1) An article may be marked ''platinum'' without qualification if 985 parts per thousand are PGM and 935 parts per thousand are pure platinum.[9]

(2) An article consisting of between 750 and 950 parts per thousand pure platinum and 950 parts per thousand PGM may be marked ''platinum'' provided that the name of the next predominant PGM precedes the word platinum.[10] (*E.g.*, an article consisting of 900 parts per thousand pure platinum and 100 parts per thousand iridium would be marked ''Irid.-Plat.'')

(3) An article consisting of between 500 and 750 parts per thousand pure platinum and 950 parts per thousand PGM may be marked ''platinum'' provided that all PGM in the product are marked and preceded by a number indicating the amount of the metal in parts per thousand.[11] (*E.g.*, an article consisting of 600 parts per thousand pure platinum and 350 parts per thousand palladium would be marked ''600Plat.-350Pall.'')

(4) An article consisting of at least 950 parts per thousand PGM, of which less than 500 parts per thousand are pure platinum, may *not* be marked ''platinum'' but may be marked with the full name of whichever PGM (other than platinum) predominates in the article.[12] (*E.g.*, an article consisting of 600 parts per thousand palladium, 200 parts per thousand platinum, and 150 parts per thousand iridium would be marked ''Palladium.'')

The Commission proposed to include the VPS, with one change, in section 7 as safe harbor provisions (*i.e.*, examples of markings and descriptions that are not considered unfair or deceptive).[13] After reviewing the comments and international standards, the Commission has revised the scheme set out in the VPS in several additional respects. Section 7 has been revised to include subsection (b), which provides examples of markings and descriptions that may be misleading, and subsection (c), which provides safe harbor provisions. The safe harbor provisions in subsection (c) of the revised Guide permit the use of international standards (as requested in the JVC/PGI petition for an advisory opinion) and a simplified version of the marking scheme contained in the VPS. The specific provisions of subsections (b) and (c) are discussed in detail below.

III. Analysis of Comments

A. International Standards

In response to the 1992 FRN, industry members indicated that the platinum Guides were inconsistent with international standards. The Commission solicited additional comments on this issue in the 1996 FRN, and virtually all of the comments received advocated changing the guidance regarding platinum markings to be consistent with the international

[3] 57 FR 24996 (June 12, 1992). The JVC, located at 401 East 34th Street, NY, NY 10016, is a trade association that was formed in 1912 to promote ethical practices in the jewelry industry.

[4] 57 FR 34532 (Aug. 5, 1992).

[5] 61 FR 27224 (May 30, 1996).

[6] The Platinum Guild International (''PGI'') circulated a form letter to industry members reflecting PGI's views and recommendations regarding the proposed revisions to the Guides. In a cover letter PGI requested that industry members in agreement with the PGI position use the form letter to comment on the proposed Guide. 730 of the comments received duplicated this form letter in all substantive respects. The remaining 76 comments were from: retailers (48); appraisers (4); manufacturer representatives (13); trade associations (6) (Platinum Guild International (3 comments), National Association of Jewelry Appraisers, International Colored Gemstone Association, and Manufacturing Jewelry and Silversmiths of America, Inc.); a dentist using platinum in fillings (2 identical comments); and, one comment each from the Canadian government; a law firm representing a manufacturer; a gemologist; and, a concerned citizen.

[7] The JVC proposed adding this sentence and the Commission proposed its addition in the May 30, 1996 FRN. 61 FR 27224. No comments were received regarding this proposal; however, the Commission believes it will be helpful to clarify these terms in the Guides.

[8] The first JVC proposal was to incorporate the VPS, with some changes, into the Guides. The Commercial Standards were promulgated by the U.S. Department of Commerce and administered by the National Bureau of Standards (''NBS''). Later renamed by the NBS as Voluntary Product Standards, they had the same legal significance as FTC guides. The Department of Commerce and the NBS, which is now called the National Institute of Standards and Technology, withdrew these and all other VPS, as an economy measure, on January 20, 1984.

[9] VPS Section 3.5(1).

[10] VPS Section 3.5(2).

[11] VPS Section 3.5(3).

[12] VPS Section 3.5(4).

[13] 61 FR 27224–27. The one proposed change to the VPS was that Section 3.5(1) be modified to provide that an article could be marked ''platinum'' without qualification if it contained 950 parts per thousand pure platinum (as opposed to 935 parts pure thousand pure platinum and 985 parts per thousand PGM). 61 FR 27227 § 23.7(b)(2).

standards.[14] The international standard, as established by the International Organization for Standardization (''ISO''), and cited in ISO 9202:1991(E), titled ''Jewellery—Fineness of precious metal alloys,'' specifies a ''range of fineness of precious metal alloys (excluding solders) recommended for use in the field of jewellery'' and provides for three values in parts per thousand for platinum jewelry: 950, 900, and 850. The comments, although advocating the use of an ''international standard,'' did not necessarily support the use of the ISO markings. Rather, the comments advocated markings that were similar to the ISO standard, in that the markings included a two-letter platinum abbreviation, and a number indicating the parts per thousand of pure platinum, but included additional or different ranges of fineness beyond 950, 900, and 850.

For instance, the form letter comments advocated the use of the three ISO markings (PT950, PT900, and PT850) and an additional marking, PT999.[15] The form letter comments stated that the three ISO markings and the additional marking ''are the same hallmarks currently used internationally. These will pave the way for easier importation and exportation of platinum jewelry, thereby allowing the U.S. to be on an even playing field with the rest of the world.''[16] Other comments advocated the use of markings that required disclosure of the pure platinum content in parts per thousand either preceded or followed by a two-letter abbreviation for platinum but did not support the same ranges of fineness as the ISO or the form letter comments.[17] The comment from the Canadian Government, however, was consistent with the ISO. The comment stated that the international standard permits three ranges of fineness for platinum, measured in parts per thousand, 950, 900, and 850, and advocated the use of these markings in the Guides.[18]

Based on the international standards reflected in the ISO standard[19] and the request in the comments to utilize standards that are recognized internationally, the Commission has revised section 7 to provide, in subsection (c)(3), that ''[a]n industry product consisting of 850 parts per thousand pure Platinum, 900 parts per thousand pure Platinum, or 950 parts per thousand pure Platinum may be marked or described as 'Platinum' provided that the Platinum marking is preceded by a number indicating the amount of parts per thousand of pure Platinum.''

The comments also asserted that in international trade, platinum articles are marked with the parts per thousand accompanied by a two-letter abbreviation, ''Pt.''[20] The ISO standard does not address abbreviation of the word ''platinum''; however, based on the comments' unanimous support for such abbreviations, the Commission has revised section 7 of the Guides to permit the use of two-letter abbreviations, for platinum and the other PGM, in addition to the use of four-letter abbreviations (*e.g.*, ''Plat.'' or ''Pt.,'' ''Irid.'' or ''Ir.,'' ''Pall.'' or ''Pd.,'' ''Ruth.'' or ''Ru.,'' ''Rhod.'' or ''Rh.,'' and ''Osmi.'' or ''Os.''). Therefore, subsection (c)(3) of revised section 7 provides that industry products consisting of 850, 900, or 950 parts per thousand pure Platinum may be marked ''850Pt.,'' ''850Plat.,'' ''900Pt.,'' ''900Plat.,'' ''950Pt.,'' ''950Plat.'' respectively.[21] For these products (*i.e.*, products containing 850 parts per thousand and above pure platinum), only the amount of pure platinum need be disclosed; there is no need to refer to the presence (or absence) of other PGM.[22]

This provision differs in two respects from the current Guides, based on the VPS, which allowed articles containing between 750 and 950 parts per thousand pure platinum and 950 parts per thousand PGM, to be marked ''platinum'' provided the name of the other PGM preceded the word platinum.[23] First, in the revised Guides,

[14] Question 5 in the FRN asked: ''Are there any international standards for marking platinum products? Should the Guides follow these standards? If so, why?'' 61 FR 27227.

[15] *E.g.*, Taylor (002). Throughout the remainder of this document, the ''form letter comments'' will be described as such and cited as Taylor (002) as this was the first form letter comment received. The PGI also advocated these 4 markings in its own comment. PGI (718).

[16] Taylor (002). Other comments also advocated the use of these four markings: Hoover (479); Worthington (503); Wolls (507); Jones (569); Hartsfield (572); Urban (574); Buruss (614); Montanari (642); Jain (683); Hurst (763); Mathews (779); Good (792); Suna (801); Rudolf (806); Jolliff (678) (representative of Nat'l Assoc. of Jewelry Appraisers (670 members), supporting the use of the 4 markings). The Manufacturing Jewelers and Silversmiths of America (''MJSA'') sent a questionnaire to its 300 members which contained the nine questions from the FRN. The MJSA comment reports the responses from this questionnaire and indicates that, of the 17 responding, 6 supported the use of international standards, 4 opposed it and 7 had no response. MJSA (799), pp. 1 & 3. The comment did not specify the international standard the respondents were supporting.

[17] Itelman (277) (supporting 4 markings but advocating 800, 850, 900 and 950); Hansen (335) (recommending Pt1000, Pt999, Pt950 and Pt900); Austin (413); (recommending 6 markings, Pt999, Pt950, Pt900, Pt850, Pt750 and Pt500); Root (414) (same); Rivclan (496); (advocating simplified stamping using Pt999, Pt950, Pt750, Pt585 and Pt500); Delmarva (497) (same); Four-Star (656) (same); Schoenke (300) (recommending two hallmarks 950Pt and Pt90/Ir10); Schoenke (604) (same); Graubart (322) (supporting one hallmark, Pt900); Goph Albitz (385) (recommending two markings, Pt999 and Pt950); Nengelken (590) (advocating use of Pt999, Pt950 and Pt900 only); Cockrell (606) (supporting the use of 4 markings with the addition of Pt585); Jordan (631) (recommending 3 markings, Pt999, Pt950, Pt900); Eichberg (681) (advocating three markings, Pt999, Pt950, Pt900); Ward (685) (recommending Pt1000, Pt999, Pt950 and Pt900).

[18] Canada (802), p. 4 (explaining that the international standard does not permit a minus tolerance from the declared quality).

[19] The Trade Agreements Act of 1979 states that no federal agency ''may engage in standards-related activity that creates unnecessary obstacles to the foreign commerce of the United States . . .'' 19 U.S.C. § 2532 (1995). It also states that federal agencies must, in developing standards, ''take into consideration international standards and shall, if appropriate, base the standards on international standards.'' 19 U.S.C. § 2532(2)(A) (1980). A ''standard'' is defined as ''a document approved by a recognized body that provides, for common and repeated use, rules, guidelines, or characteristics for products or related processes and production methods, with which compliance is not mandatory. Such term may also include or deal exclusively with terminology, symbols, packaging, marking, or labeling requirements as they apply to a product, process, or production method.'' 19 U.S.C. § 2571(13) (1995). An international standard is defined as a standard promulgated by an organization engaged in international standards-related activities, the membership of which is open to representatives, whether public or private, of the United States and all members of the World Trade Organization (''WTO''). 19 U.S.C. § 2571 (5), (6), and (8) (1995). A WTO member is ''a state or separate customs territory (within the meaning of Article XII of the WTO Agreement), with respect to which the United States applies the WTO Agreement. Uruguay Round Agreements Act, 19 U.S.C. § 3501(10) (1995).

According to the ''foreword'' sections in ISO Standard 9202 (cited above), ISO is ''a worldwide federation of national standards bodies. The work of preparing International Standards is normally carried out through ISO technical committees.'' ISO is open to representatives from the United States and to representatives from members of the WTO, and qualifies as an international standards organization.

[20] Question 7 in the FRN addressed this issue: ''Should platinum and other PGM be described with two letter abbreviations? Do consumers understand two letter abbreviations?'' 61 FR 27227. Four comments responded to this question, three of which advocated the use of two-letter abbreviations. These three comments further stated that although some consumers may not understand two-letter abbreviations, they would become accustomed to them over time. Johnson Matthey (396), p. 4; PGI (718), p. 3; Canada (802), p. 5; *cf.* MJSA (799), p. 3 (questionnaire results: 7 yes, 9 no, 1 no response).

[21] Although the comments indicated that ''999Pt.'' is a standard also used internationally, the Commission chose not to include this standard because it was not mentioned in ISO Standard 9202. As discussed below, however, the Guide would permit the use of this marking under § 23.7(c)(4).

[22] As discussed below, the revised Guides contain a different marking scheme for products containing less than 850 parts per thousand pure platinum, which is a simplified version of the current standard as described in the VPS.

[23] VPS Section 3.5(2).

the Commission is not requiring that products containing 850 parts per thousand pure platinum and above also contain 950 parts per thousand PGM. The international standard, as described in the ISO and the comments, does not contain this requirement. To maintain consistency with the international standards, the Commission has decided to omit this requirement in the revised Guides.

Second, the VPS for products containing between 750 and 950 parts per thousand pure platinum (and 950 parts per thousand PGM) required that the next predominant PGM in the article be disclosed and precede platinum in the marking, which resulted in markings such as ''Irid.-Plat.'' The revised Guide permits a disclosure of solely the platinum content in parts per thousand without reference to other PGM where the article contains 850 parts per thousand pure platinum or above. In the FRN the Commission discussed the ''Irid.-Plat.'' marking specifically and solicited comments regarding whether consumers understand this marking.[24] Three comments addressed this issue and indicated that the ''Irid.-Plat.'' marking may be confusing to consumers.[25] The Canadian Government's comment explained that ''[c]onsumers have become accustomed to ingredient listings which place the predominant substance first in the listing, followed thereafter by other substances in descending order by weight''; therefore, an ''Irid.-Plat.'' marking is counter-intuitive.[26]

Based upon these three comments and the previously discussed comments' unanimous plea for consistency with international standards, the Commission has decided not to include the provision in the VPS for marking products consisting of between 750 and 950 parts per thousand platinum as a safe harbor in section 7 of the revised Guides.[27] As a result, products containing 850 parts per thousand pure platinum and above can now be marked solely with the parts per thousand of pure platinum content and a two- or four-letter abbreviation for platinum, and there is no requirement that the article contain 950 parts per thousand PGM.

B. Unqualified Use of the Word ''Platinum'' in a Marking or Description

As discussed above, the VPS provided that an article could be marked solely with the word ''platinum'' if 985 parts per thousand are PGM and 935 parts per thousand are pure platinum. The JVC proposed that the requirement of 985 parts per thousand PGM be changed to 950 parts per thousand pure platinum. In response to the 1992 FRN, fourteen comments addressed this issue. Twelve favored the revision and two opposed the revision without offering substantive reasons.[28] The comments supporting this revision asserted that ''950 platinum'' is the accepted standard worldwide and use of this standard would harmonize the Guides with international practices.[29]

The 1996 FRN proposed changing section 7 of the Guides as recommended by the JVC and many of the prior comments, to provide that ''[a]n industry product consisting of at least 950 parts per thousand pure Platinum may be marked 'Platinum' '' without qualification. Only one of the comments received in response to the 1996 FRN addressed this issue. The Platinum Guild International (''PGI'') opined that ''the guidance for platinum jewelry should be the same, whether below or above 950 ppt pure platinum.''[30] As described above, the PGI, both in its individual comments and the form letter comment circulated to industry, has advocated the use of four consistent markings (Pt999, Pt950, Pt900 and Pt850). PGI asserts that these markings will facilitate export of U.S. platinum jewelry.

The Commission has decided that unqualified use of the word ''platinum'' to mark or describe industry products consisting of 950 parts per thousand pure platinum or above would not be misleading and would not hamper international trade. For many years, the Guides have permitted a marking or description of ''platinum'' where the pure platinum content was sufficiently high. To address the concern raised in the comment, the Commission has made this marking an alternative marking. Manufacturers and retailers who seek to export their products or maintain consistency with international standards are free to use ''950Pt.''

C. Minimum Standard for a Platinum Description or Marking

The Commission received numerous comments proposing that 850 parts per thousand pure platinum be established as the minimum standard for a platinum marking. The PGI individual comments and the 730 form letter comments strongly advocate this position, and 23 other comments also support 850 parts per thousand as a minimum standard for a platinum marking.[31] Nineteen comments support 900 parts per thousand pure platinum as the minimum standard for a platinum marking;[32] one comment recommends a minimum of 800 parts per thousand pure platinum;[33] eight comments advocate a 585 minimum;[34] and four comments support a minimum of 500 parts per thousand pure platinum for a platinum marking.[35] One commenter indicated that it is currently preparing to market jewelry containing 585 parts per thousand pure platinum.[36]

The form letter comments advocating an 850 parts per thousand pure platinum minimum standard for a platinum marking explain that:

> Growth of over 300% in the last three years in the U.S. platinum market has been achieved by promoting certain characteristics of platinum to consumers. These are: platinum's purity, rarity, distinctive color, luster and density. 850 parts per thousand is the minimum content to retain these qualities, which are prized by the American consumer.[37]

[24] 61 FR 27225.

[25] Hoover (479) (''difficult to understand why 95% platinum is PT and 90% platinum with 10% iridium is Irid.-Plat.''); Peters (701) (no benefit to consumers to identify products as Irid.-Plat.); Canada (802), pp. 3–4 (may be confusing to consumers).

[26] Canada (802), p. 3.

[27] The omission of this provision of the VPS as a safe harbor in the revised Guides is the only instance where the revised Guides may conflict with markings or descriptions now existing on platinum products. One commenter indicated that the Commission should include an exemption in the Guides to exempt platinum jewelry from the revised Guides if stamped prior to the revision. Suna (801) (asserting that hallmarking changes are very costly). Although the Commission is no longer providing a safe harbor for such markings or descriptions, the Guides do not state that such markings or descriptions are unfair or deceptive; therefore, markings in accordance with the provisions of the Guides that governed platinum claims prior to these revisions need not be changed.

[28] 61 FR 27224 notes 5–6 (May 30, 1996).

[29] *See* 61 FR 27224.

[30] PGI (718), p.2.

[31] Taylor (002); PGI (718); Graubert (322); LaPrad (341); Johnson Matthey (396); Hoover (479); Worthington (503); Raskin (527); Jones (569); Hartsfield (572); Kelrick (587); Samuel (612); Buruss (614); Montanaria (642); Jolliff (678) (representative of the Nat'l Assoc. of Jewelry Appraisers (670 members)); Rudolf (806); Jain (683); Yanke (717); Carey (759); Hurst (763); Peters (701); Mathews (779); Good (792); Kelrick (796); Suma (801).

[32] Neiman (022); Leber (045); Caldiers (063); Snyder (086); Novell (180, 181 & 182) (three employees of the same retailer; each sent the identical comment); Silver (276); Schoenke (300 & 604); Hansen (335); Glasser (337); Urban (574); Schechter (451); Nengelken (590); Jordan (631); Moses (647); Ward (685); Sullivan (703).

[33] Itelman (277) (recommending 800PT as the minimum standard because 10KT is the minimum for gold).

[34] Four-Star (173); Avante (174); Shersher (374); Smith (762); Rivclan (496); Delmarva (497); Four-Star (656); Cockrell (606).

[35] Shersher (001); Austin (413); Root (414); Coleman & Rhine (805); *see also* MJSA (799), p. 3 (questionnaire results: 3 supported a platinum marking for products below 500 parts per thousand pure platinum, 14 opposed).

[36] Shersher (374).

[37] Taylor (002).

The PGI comment explains that ''[t]here is no other worldwide market, with the exception of the U.S., which allows platinum jewelry items below 850 ppt pure platinum to be sold.'' [38] PGI also asserted that the marking as platinum of products that contain less than 850 parts per thousand pure platinum:

would seriously diminish the quality of jewelry products at the manufacturing and consumer level. * * * To include such low purity platinum jewelry in the guidelines would not make platinum products accessible to consumers but would allow for poor quality and less durable products to permeate the U.S. market from off-shore manufacturing and from U.S. manufacturers, thus misrepresenting the benefits and qualities of high-purity platinum.[39]

Johnson Matthey explained that ''[t]he qualities and characteristics of platinum can be changed by the addition of certain elements in varying proportions. * * * It is Johnson Matthey's experience that alloy additions greater than 15% offer no improvements in platinum's working characteristics but can adversely affect its desirable qualities such as colour and density.'' [40]

The comments advocating 900 parts per thousand pure platinum as the minimum standard for a platinum marking use a similar rationale as the PGI, Johnson Matthey, and form letter comments to support their position.[41] In fact, many of these commenters submitted the form letter comment but simply replaced 850 with 900.[42] Certain comments, however, raised the concern that products containing 585 parts per thousand pure platinum will confuse consumers because 14K gold products contain 58.5% gold.[43] These comments assert that where the products contain gold ornaments on a platinum band, for instance, the consumer will think the ''585'' refers to the gold content in the ornament and the ''platinum'' refers to the platinum content in the band. Section 23.9(a) of the current Guides discusses deception as to applicability of a mark. It states that ''[i]f a quality mark on any industry product is applicable only to part of the product, the part of the product to which it is applicable (or inapplicable) should be disclosed when, absent such disclosure, the location of the mark misrepresents the product or part's true composition.'' Therefore, the markings referred to in these comments could be considered deceptive under the current Guides. Thus, no further provision in section 7 is required to address this concern.

The comments supporting 585 as the minimum standard explain that having products consisting of 585 parts per thousand pure platinum and 950 parts per thousand PGM ''makes platinum jewelry significantly more affordable without sacrifices in color, look or quality.'' [44] Two comments, advocating 500 parts per thousand pure platinum as the minimum, assert that a product should consist of at least half of what it is called; ''[a] higher standard may 'tie the hands' of future technological breakthroughs'' and ''be a detriment to the long term platinum market and its salability.'' [45]

PGI has explained that it has apprehensions about supporting 58.5% platinum because questions still remain as to whether this alloy will be durable, scratch resistant, hypo-allergenic, or will provide a superior setting for gem stones and a dramatic cost savings to consumers—''58.5% platinum has not been properly analyzed or researched to the point where PGI would feel comfortable endorsing this platinum category.'' [46]

The Commission has received no evidence indicating that a pure platinum content below 850 parts per thousand or 900 parts per thousand results in a product that has lost the qualities that consumers associate with platinum. For many years, the Guides have permitted a platinum marking on products consisting of less than 850 parts per thousand pure platinum.[47] The ISO standard indicates in a note that ''[a] possible inclusion of platinum 750% (sic) may be envisaged in the course of further revision of this International Standard.'' [48]

The Commission believes that if consumers are given full disclosure as to the platinum content and the content of the remaining PGM in the product, they will not be misled. An informative marking or description will put consumers on notice that the product contains certain precious metals, thereby putting them in a position to inquire of the jeweler as to the relative value of the different metals and the overall value of the product. The Commission is persuaded, however, that products consisting of below 500 parts per thousand pure platinum should not bear a platinum marking even if the platinum predominates because this has been the historical standard.[49] Accordingly, the revised Guides provide that ''[a]n industry product consisting of at least 950 parts per thousand PGM, and of at least 500 parts per thousand pure Platinum, may be marked

[38] PGI (718), p. 1.

[39] PGI (718), p. 3. Johnson Matthey asserted similarly that permitting products with less than 850 parts per thousand pure platinum to be marked as platinum ''would seriously devalue the status of the metal as a jewelry material'' and would ''damage the US jewelry industry's reputation and restrict export opportunities for American companies.'' Johnson Matthey (396), p. 4.

[40] Johnson Matthey (396), p. 3. Johnson Matthey further explained that ''For example: The addition of 5% copper extends tool life for machined jewelry products and the addition of 5% cobalt provides greater fluidity and hardness. Some additions require greater quantities to be truly effective, for example iridium which at 5% has a limited hardening effect but at 10% provides a very versatile alloy for jewelry manufacture.'' Johnson Matthey (396), p. 3; *see also* Canada (802), p. 3 (stating that many characteristics, such as density, acidity, strength, ductility, hardness, wear resistance, color and light, are affected to various extents subject to alloy proportions of precious metals). These comments were addressed to question 1 in the FRN (''Do products with less than 950 parts per thousand pure platinum have the same qualities and characteristics as products with larger amounts of platinum?''). 61 FR 27226.

[41] *E.g.*, Nengelken (590) (asserting that platinum is a precious metal and lower alloys reduce quality); Ward (685) (opining that 900 is the minimum necessary to ''retain the quality, purity, security, distinctive color, luster, density and rarity which are valued by the American consumer''); Sullivan (703) (stating that any tolerance below 900 ''would downgrade the image [of platinum] in the industry'').

[42] Neiman (022); Leber (045); Caldiers (063); Snyder (086); Novell (180, 181 & 182) (three employees of the same retailer; each sent in the identical comment); Silver (276); Glasser (337); Jordan (631).

[43] Schechter (451); Montanari (642); Hurst (763); *cf.* Goph (386) (asserting that 14 karat white gold is the substitute for consumers who cannot afford platinum and remarking that 585 platinum will ruin platinum's reputation— ''if consumers want cheap, let them buy 14K white gold'').

[44] Shersher (374), p. 2; *see also* Cockrell (606) (stating ''we have 10K gold. Why not a lower karat platinum?''); Rivclan (496) (asserting that 585 platinum ''is excellent jewelry for manufacturing and provides an all important *choice* for the middle class consumers who can't afford expensive platinum jewelry.''); Delmarva (497) (same); Four-Star (656) (same).

[45] Austin (413); *accord* Root (414).

[46] PGI (272), pp. 3–4.

[47] As described above, the VPS, referenced in the current Guide, provided for platinum markings for products consisting of between 500 and 750 parts per thousand pure platinum and for products consisting of between 750 and 950 parts per thousand pure platinum. VPS Sections 3.5(2)–(3). Two different marking schemes were used for each range; both, however, allowed the word platinum to be used in the marking.

[48] ISO 9202: 1991(E).

[49] FRN question 6 requested comment on whether products could be marked ''platinum'' if the product contained 950 parts per thousand PGM, of which less than 500 parts per thousand were pure platinum. 61 FR 27227. Eleven comments addressed this question and unanimously stated that products below 500 parts per thousand pure platinum should not be marked platinum. Root (360); Austin (361); Johnson Matthey (396), p. 4; Austin (413); Root (414); Rivclan (496); Delmarva (497); Four-Star (656); Moses (647); Peters (701); PGI (718). The only comment arguably supporting a platinum marking for products consisting of less than 500 parts per thousand pure platinum was the MJSA comment that indicated that 3 of the 17 members responding to their questionnaire supported such a marking and 14 opposed it. MJSA (799), p. 3. Thus, the Commission is retaining the prohibition in the current Guides against platinum markings for products containing less than 500 parts per thousand platinum.

'Platinum' provided that the mark of each PGM constituent is preceded by a number indicating the amount in parts per thousand of each PGM, as for example, '600Pt.350Ir.,' or '600Plat.350Irid.' '' [50]

This provision is the standard from the VPS, referenced in the current Guide. In the VPS, this standard only applied to products consisting of between 500 and 750 parts per thousand pure platinum. As discussed above, a different standard applied to products consisting of between 750 and 950 parts per thousand pure platinum. One of the goals of revising the Guides was to simplify and update the current standards. The comments responding to question 2 in the FRN, which asked whether the guidance for products with differing levels of platinum should be the same, indicated that there is no reason to have these different standards.[51] Thus, use of the one standard for products containing less than 850 parts per thousand pure platinum simplifies the current guidance.

Another option was to permit a derivation of the international standard with only the parts per thousand and a platinum abbreviation disclosed, with no mention of the other PGM. The Commission has decided to retain the standard from the VPS, which requires disclosure of all the PGM, and apply it to products containing less than 850 parts per thousand pure platinum. To the extent there are concerns that articles with a pure platinum content below 850 parts per thousand do not possess the same qualities and characteristics of higher platinum content articles, the requirement of additional information for such articles will help insure that consumers are provided with clear and accurate information to make informed purchasing decisions.[52] Several comments indicated that it may be costly to mark, in parts per thousand, each PGM and that these markings are not beneficial to consumers.[53] The Commission believes, however, that including each PGM and the parts per thousand for products containing less than 850 parts per thousand pure platinum is beneficial to consumers. By making consumers aware of the presence of PGM other than platinum in the article, the consumer is put on notice and may ask the jeweler to explain the difference between the article and another article solely marked with the pure platinum content.

D. The Marking of Products Containing Less Than 500 Parts Per Thousand Pure Platinum

The VPS, referenced in the current Guide, does not allow a platinum marking for articles with less than 500 parts per thousand pure platinum but does permit a marking containing the full name of the PGM, other than platinum, that predominates.[54] The Commission has decided not to include this section of the VPS as a safe harbor in the revised Guides. Although a standard (that differed slightly from the VPS) for products containing less than 500 parts per thousand pure platinum but 950 parts per thousand PGM was proposed,[55] no comments were received regarding the proposal. The Commission is aware that there is an ISO standard for palladium products.[56] The Commission has no evidence, however, that products that would fall under this category of markings are being sold in the U.S. Thus, the Commission has determined that guidance for such products is not needed at this time.[57]

IV. Miscellaneous Issues

A. Platinum-Filled, Platinum Overlay, or Platinum-Clad Products

The Commission solicited comment on the need for guidance regarding descriptions of platinum-filled, platinum overlay, or platinum-clad products.[58] Five comments responded. Johnson Matthey, the PGI, and the Canadian government all stated that they were unaware of any ''platinum-filled'' products being manufactured worldwide.[59] Based on these comments, the Commission has determined that

[50] In addition, revised section 23.7(b)(2) of the Guides provides that a marking or description using the word platinum or any abbreviation and a number indicating the parts per thousand, where the product contains less than 850 parts per thousand pure platinum, without mention of the other PGM contained in the product, such as ''600Platinum,'' may be misleading. The revised Guide also retains the requirement of the VPS that products containing lower levels of pure platinum must contain 950 part per thousand PGM. The revised Guide includes this requirement for articles containing less than 850 parts per thousand platinum, whereas the VPS required at least 950 parts per thousand PGM for any article to be marked as platinum. As discussed above, the Commission is not requiring 950 parts per thousand PGM for products containing 850 parts per thousand platinum and above because the international standard (as described in ISO 9202 and the comments) does not contain this requirement.

This marking also provides guidance in the event the platinum industry develops new variations of PGM metals, for example ''925Plat.75Irid.'' (This product also could be marked ''900Plat.''). The comments indicated that most platinum jewelry consists of either 900 or 950 parts per thousand pure platinum with the exception of platinum chains, which usually contain 850 parts per thousand pure platinum. The acceptable markings, however, are broad enough to address new innovations should they occur.

[51] Shersher (001); Johnson Matthey (396), pp. 3–4; Rivclan (496); Delmarva (497); Four-Star (656); PGI (718); Coleman & Rhine (806). These comments also indicated that one standard may result in less confusion for consumers. The MJSA comment indicated that the members supported using the same guidance; of the 17 responding to the questionnaire, 10 supported the same guidance, 3 opposed, and 4 had no response. MJSA (799), p. 2.

[52] *See* Canada (802), p. 3 (''[a]llowing the market to find its own level through providing consumers with clear and accurate information on the products so that they can make informed purchasing decisions is the basic ideal model.'')

[53] These comments were received in response to question 3, posed in the FRN (''For products consisting of less than 950 parts pure platinum, what are the benefits and costs of marking each PGM contained in the product? Should the amount of each metal, in parts per thousand, be disclosed?'' 61 FR 27227). Nine comments addressed this specific issue. Three stated that it can be costly to mark each metal in parts per thousand. Shersher (001); Canada (806), p. 4; PGI (718), p. 3. Seven stated that it is *not* beneficial and perhaps confusing to mark each metal in its parts per thousand. Mathews (779); Johnson Matthey (396), p. 4; Rivclan (496); Delmarva (497); Four-Star (656); Peters (701); PGI (718); *cf.* Canada (806), p. 4 (stating that markings of each metal in parts per thousand may have only questionable value to the consumer who is only concerned with the total platinum content). The MJSA comment appears to indicate that 9 members believe the amount of each metal, in parts per thousand, should be disclosed; 6 do not; and, 2 did not respond. The comment is unclear, however, whether these responses correspond to the question regarding costs and benefits or the question regarding marking. MJSA (799), p. 2.

Seven comments responded to FRN question 4 (''Should products with less than 950 parts pure platinum be marked with only the amount of pure platinum contained in the product (*e.g.*, PLAT 900)? Do consumers understand this marking? Would percentage markings (*e.g.*, 90% Plat) be preferable and feasible?'' 61 FR 27227). These comments indicated that only the platinum content in parts per thousand should be disclosed. Shersher (001); Johnson Matthey (396), p. 4; Peters (701); PGI (718), p. 3; Canada (802), p. 4; *cf.* MJSA (799), p. 2 (Marking only with platinum: 8 yes, 9 no; Consumers understanding the marking: 5 yes, 9 no, 3 no response). Three comments indicated that a percentage mark could be mis-read. Johnson Matthey (396), p. 4; PGI (718), p. 3; Canada (802), p. 4. Two comments stated that consumers will understand a marking of ''Plat 900.'' Moses (647); PGI (718), p. 3. One comment indicated that consumers may not understand such a marking. Canada (802), p. 4.

[54] VPS Section 3.5(4). For example, an article consisting of 600 parts per thousand palladium, 200 parts per thousand platinum and 150 parts per thousand iridium could be marked ''Palladium.''

[55] 61 FR 27227.

[56] The ISO standard for palladium provides for two markings for palladium, 500 and 950 parts per thousand.

[57] Articles marked or described consistent with the ISO standard or the provisions in the current Guides are not likely to be considered unfair or deceptive.

[58] 61 FR 27227 (question 8).

[59] Johnson Matthey (396), p. 5; PGI (718), p. 4; Canada (802), p. 5. One comment stated that there is a need for Commission guidance but provided no rationale or suggestions. Moses (647). The MJSA comments indicate that 12 members felt a need for guidance and 5 did not; no reasons or suggestions were provided. MJSA (799, p. 3). Johnson Matthey and PGI did suggest, however, that the guidance on gold and silver-filled articles could be adopted for platinum.

guidance for such products is not needed at this time.

B. Chain Articles

The Commission also solicited comments regarding whether chain articles containing solder-filled wire and consisting of at least 850 parts per thousand pure platinum should be marked ''platinum.''[60] Eight comments addressed this issue. Six responded that chain articles containing solder-filled wire and consisting of at least 850 parts per thousand pure platinum should be marked platinum.[61] One comment responded that all platinum products, including chains, should have a minimum of 900 parts per thousand pure platinum.[62] The Canadian Government comment asserted that the issue of chain articles filled with solder wire may be mooted by the improvements said to be achieved with laser welding.[63] The Commission has decided that there is no basis for the Guides to treat chain products differently from any other industry product containing platinum. Therefore, the markings for chain articles should follow the same standards as all other industry products containing platinum or PGM.

C. Other

Several comments raised issues regarding other provisions of the Guides not concerning articles made with platinum.[64] One comment addressed an FTC matter that did not relate to the Guides in any respect.[65] These comments were forwarded to appropriate Commission staff to address but were not considered with respect to the revisions to Section 23.7 of the Guides.

List of Subjects in 16 CFR Part 23

Advertising, Trade practices, Watches and jewelry.

Accordingly, the Commission amends chapter I of Title 16 of the Code of Federal Regulations as follows:

PART 23—[AMENDED]

1. The authority for citation for Part 23 continues to read as follows:

Authority: Sec. 6, 5, 38 Stat. 721, 719; 15 U.S.C. 46, 45.

2. Section 23.7 is revised to read as follows:

§ 23.7 Misuse of the words ''platinum,'' ''iridium,'' ''palladium,'' ''ruthenium,'' ''rhodium,'' and ''osmium.''

(a) It is unfair or deceptive to use the words ''platinum,'' ''iridium,'' ''palladium,'' ''ruthenium,'' ''rhodium,'' and ''osmium,'' or any abbreviation to mark or describe all or part of an industry product if such marking or description misrepresents the product's true composition. The Platinum Group Metals (PGM) are Platinum, Iridium, Palladium, Ruthenium, Rhodium, and Osmium.

(b) The following are examples of markings or descriptions that may be misleading:[10]

(1) Use of the word ''Platinum'' or any abbreviation, without qualification, to describe all or part of an industry product that is not composed throughout of 950 parts per thousand pure Platinum.

(2) Use of the word ''Platinum'' or any abbreviation accompanied by a number indicating the parts per thousand of pure Platinum contained in the product without mention of the number of parts per thousand of other PGM contained in the product, to describe all or part of an industry product that is not composed throughout of at least 850 parts per thousand pure platinum, for example, ''600Plat.''

(3) Use of the word ''Platinum'' or any abbreviation thereof, to mark or describe any product that is not composed throughout of at least 500 parts per thousand pure Platinum.

(c) The following are examples of markings and descriptions that are not considered unfair or deceptive:

(1) The following abbreviations for each of the PGM may be used for quality marks on articles: ''Plat.'' or ''Pt.'' for Platinum; ''Irid.'' or ''Ir.'' for Iridium; ''Pall.'' or ''Pd.'' for Palladium; ''Ruth.'' or ''Ru.'' for Ruthenium; ''Rhod.'' or ''Rh.'' for Rhodium; and ''Osmi.'' or ''Os.'' for Osmium.

(2) An industry product consisting of at least 950 parts per thousand pure Platinum may be marked or described as ''Platinum.''

(3) An industry product consisting of 850 parts per thousand pure Platinum, 900 parts per thousand pure Platinum, or 950 parts per thousand pure Platinum may be marked ''Platinum,'' provided that the Platinum marking is preceded by a number indicating the amount in parts per thousand of pure Platinum (for industry products consisting of 950 parts per thousand pure Platinum, the marking described in § 23.7(b)(2) above is also appropriate). Thus, the following markings may be used: ''950Pt.,'' ''950Plat.,'' ''900Pt.,'' ''900Plat.,'' ''850Pt.,'' or ''850Plat.''

(4) An industry product consisting of at least 950 parts per thousand PGM, and of at least 500 parts per thousand pure Platinum, may be marked ''Platinum,'' provided that the mark of each PGM constituent is preceded by a number indicating the amount in parts per thousand of each PGM, as for example, ''600Pt.350Ir.,'' ''600Plat.350Irid.,'' or ''550Pt.350Pd.50Ir.,'' ''550Plat.350Pall.50Irid.''

Note to § 23.7: Exemptions recognized in the assay of platinum industry products are listed in Appendix A of this part.

By direction of the Commission.

Donald S. Clark,

Secretary.

Note: The following appendix will not appear in the Code of Federal Regulations.

APPENDIX—LIST OF COMMENTERS AND ABBREVIATIONS

Abbreviation	No.	Commenter
A & A	160	A & A Jewelers, Inc.
A.C	675	A.C. Associates.
A.L. Jacobs	236	A.L. Jacobs & Sons, Jewelers.
A&B	460	A&B Jewels & Tools.
Aalund	243	Nanz Aalund.

[60] 61 FR 27227 (question 9).

[61] Itelman (277); Johnson Matthey (396), p. 5; Buruss (614); Moses (647); PGI (718); *cf.* MJSA (799), p. 3 (9 yes, 6 no, 2 no response).

[62] LaPrad (341).

[63] Canada (802), p. 5.

[64] Hoover (479) (discussing gold standards); Schwartz (709) (describing diamond disclosures); Kremkow (719) (representative of the International Colored Gemstone Association, addressing gemstone treatments); Nicholls (736) (discussing diamond disclosures); Mayfield (754) (addressing gemstone treatments); Krementz (798) (describing gold standards and diamond disclosures).

[65] Bakery (760) (discussing a company's violation of an FTC order).

[10] See paragraph (c) of this section for examples of acceptable markings and descriptions.

APPENDIX—LIST OF COMMENTERS AND ABBREVIATIONS—Continued

Abbreviation	No.	Commenter
Abdulky	453	F.M. Abdulky, Inc.
Ace	382	The Ace of Diamonds.
Adams	43	Adams Jewelers, Inc.
Ajour	535	Ajour Ltd.
Alexander	273	Robert Alexander Jewelers.
Alie	80	A.E. Alie & Sons, Inc.
Alishan	32	Alishan.
Ali's	295	Ali's Persian Carpets.
Allen	521	Douglas Allen Jewelers.
Alsohus	639	B. Alsohus Jewelers.
Altemueller	585	Altemueller Jewelry.
American	137	The American Jewelry Co.
American	305	American Jewelry Designs.
Anderson	494	T.K. Anderson.
Anderson	437	Bruce Anderson Fine Jewelry.
Anthony	438	John Anthony Designer.
Anthony	695	Anthony Jewelers.
Antoinette's	370	Antoinette's Inc.
Antonini	312	Antonini.
Arkins	204	Arkin's Jewelers.
Arkless	558	Suzanne M. Arkless.
Armstrong	82	K.F. Armstrong.
Arnold's	512	Arnold's Jewelry.
Aronstam	483	MS Aronstam.
Arrigoni	49	Arrigoni Jewelers, Inc.
Artisan	336	Artisan Designs.
Asprey	70	Asprey.
Auction	103	Auction Market Resource.
Aura	87	Aura America, Inc.
Aurion	3	Aurion International Ltd.
Austin	413	Austin Jewelry Appraisers.
Austin	361	Austin Jewelry Appraisers.
Avante	174	Avante Designs.
Azevedo	435	Azevedo Jewelers & Gemologists, Inc.
Bachman	14	Bachman Jewelers.
Bailey	46	Bailey Banks & Biddle.
Bailey	372	Bailey Banks & Biddle.
Bakery	760	Bakery, Confectionery and Tobacco Workers.
Ballard	90	Ballard & Sons, Inc.
Balshone	788	Joseph G. Balshone.
Barclay's	549	Barclay's Jewelers.
Barnes	153	Barnes Jewelry.
Barnes	456	Barnes Jewelry.
Barthman	332	William Barthman.
Bauer	218	Christian Bauer.
Beattie	144	H.W. Beattie & Sons, Inc.
Beauchamp	482	Beauchamp & Co. Jewelers.
Begeman's	280	Begeman's Jewelers.
Beins	404	Robert Beins Jewelers.
Belgian	529	Belgian Diamond Specialties.
Ben Bridge	219	Ben Bridge Jeweler, Inc.
Ben Adams	248	Ben Adams.
Benchmark	206	Benchmark.
Bender's	217	Bender's.
Benson	13	Gallen Benson.
Berk	491	Barbara Berk Designs.
Best	354	Joseph Best.
Betlach	288	Fredrick E. Betlach.
Bienstock	392	Bienstock Industries Inc.
Blackstone	133	Blackstone Fine Jewelers.
Blancato	608	F. Blancato, Inc.
Blumer	334	AB Blumer.
Bockman's	131	Bockman's Jewelers & Goldsmiths.
Bohan	222	Jane Bohan, Inc.
Bomberger	690	Carolyn Bomberger.
Bondanza	126	Michael Bondanza, Inc.
Bongiorno	36	Alexander J. Bongiorno.
Booth	241	Richard Booth.
Borelli	423	Borelli Jewelers.
Boren	163	CJ & Anita Boren Jewelry.
Borsheim's	226	Borsheim's.
Bosco	316	John Bosco Jewelry Inc.

APPENDIX—LIST OF COMMENTERS AND ABBREVIATIONS—Continued

Abbreviation	No.	Commenter
Bracken	325	Bracken Jewelers.
Brancier	680	Brancier Jeweller.
Braunschweiger	6	Braunschweiger.
Braunschweiger	635	Braunschweiger.
Brentwood	264	Brentwood Jewelry & Gifts.
Brick House	708	The Brick House.
Bridge	89	Ben Bridge Jeweler.
Briggs	599	Louise Briggs.
Brillant	255	Brillant Choice.
Broadway	128	Broadway Jewelers.
Brodkey	4	Brodkey Brothers, Inc.
Broken	96	Gem Broken, Inc.
Brookhurst	35	Brookhurst Jewelry & Loan.
Brooks	159	Brooks Jewelry.
Bruce's	710	Bruce's Jewelry Co.
Brundage	303	Brundage Jewelers.
Buechner	260	John Buechner, Inc.
Bulfer's	58	Bulfer's.
Buruss	614	Norman Jewelers, Inc.
Butler	285	Roger Butler Jewelers.
Butler	101	KE Butler & Company.
C & C	665	C & C Jewelers.
Cabochon	39	Cabochon Gems & Designs.
Cadeaux	551	Cadeaux.
Canada	802	Consumer Products Directorate, Industry Canada.
Carey	759	Town & Country Corporation.
Carlos Diaz	235	Carlos Diaz, Silversmiths.
Carlyle	492	Carlyle & Co. Jewelers.
Carlyle	634	Carlyle & Co. Jewelers.
Carol Klein	785	Carol Klein Fine Jewelry.
Carre	548	Henri Carre.
Carreras	252	Carreras Ltd.
Carroll	47	Carroll's Jewelers.
Carter	171	Stan Carter Jeweler.
Carter	486	James B. Carter.
Carter	129	Carter & Sons.
Carter's	711	Carter's Jewel Chest.
Cartiers	63	Smith Jewelers.
Casey's	523	Casey's Jewelers.
Cavanaugh's	506	Cavanaugh's Jewelers, Inc.
Chalson	156	William Chalson & Co. Inc.
Champion's	291	Champion's Jewelers.
Charles	250	Charles on Fairhaven.
Chateau	511	Chateau Jewelry Corp.
Chopard	229	Chopard Watch Corp.
Christensen	185	Christensen & Rafferty.
Christian Bernard	108	Christian Bernard.
Christopher's	519	Christopher's Fine Jewelry and Gallery.
Cinnamon	730	Cinnamon Designs.
Clark	149	B.C. Clark.
Clark	88	B.C. Clark Jewelers.
Classic	436	Classic Treasures Jewelry.
Clear Lake	720	Clear Lake Precious Metals.
Club	104	Club Jewelry Mfg. Inc.
Coast	310	Coast Diamond.
Cockrell	606	Charles Cockrell.
Coleman & Rhine	805	Coleman & Rhine.
Coleman	97	Nelson Coleman & Sons, Ltd.
Collector's	696	Collector's Showcase.
Continental	471	Continental Coin Corporation.
Conway	577	Judith Conway.
Conway	38	Judith Conway.
Cooper	179	Jeff Cooper, Inc.
Cooperman	442	Marilyn F. Cooperman Inc.
Cooperman	443	Marilyn F. Cooperman.
Cordova	79	Cordova, Inc.
Cornerstone	117	Cornerstone Jewelry.
Coronado	283	Rodimiro Coronado.
Corum	580	Corum Jewelers.
Costello	654	Costello Jewelry Co.
Cox	394	Cox Jewelers.
Crafters	275	Metal Crafters, Inc.

APPENDIX—LIST OF COMMENTERS AND ABBREVIATIONS—Continued

Abbreviation	No.	Commenter
Craig	686	David Craig Ltd.
Crescent	388	Crescent Jewelers Inc.
Crews	84	Crews Fine Jewelry.
Cronier's	582	Cronier's Fine Jewelry.
Cross	298	Cross Jewelers.
Cumberland	459	Cumberland Diamond Exchange.
D&F Decker	463	D&F Decker Jewelers.
Dakota	371	Dakota Gems.
Darden	661	Darden Jewelers.
Dardin	263	Dardin Jewelers.
David Porter	782	David Porter Jewelry.
Davids	476	Davids.
Davidson	469	Davidson & Licht.
David's	127	David's Ltd.
Davis	510	Hal Davis Jewelers.
Davis	109	Davis Diamond Designs.
Davis	743	Hal Davis Jewelers.
De Bears	379	De Bears, Inc.
De Luna	102	De Luna Jewelers.
De Jonghe	610	De Jonghe.
De Scenza	473	De Scenza Diamonds.
Dearborn	232	Dearborn Jewelers.
Deese	765	Mikal Deese.
Degroot	550	Degroot Industries International, Inc.
Dekkers	537	Dekkers Jewelry.
Delfine's	545	Delfine's Inc.
Delma	301	Delma USA Ltd.
Delmarva	497	Delmarva Jewelry.
Delta	515	Delta Diamond Setters & Jewelers, Inc.
Demi-Cache	148	Demi-Cache, Inc.
Derryberry	461	Josef Derryberry.
Dery	571	J. Dery Jewelers.
Designs	317	Designs in Gems.
DFS	290	DFS Merchandising Limited.
DFS	289	DFS Merchandising Limited.
Di-Mart	638	Di-Mart.
Dia	543	Dia Gem.
Diamond Broker	270	The Diamond Broker & Fine Jewels II.
Diana	777	Diana Jewelers of Liverpool, Inc.
Diller	439	Wm. H. Diller Inc.
Direct II	687	Gold & Diamonds Direct II.
Dodrill	214	T.K. Dodrill Jewelers.
Dohack	528	Dohack Jewelers.
Dunay	221	Henry Dunay Designs, Inc.
DuNouveau	205	DuNouveau Designs.
Dunstan	568	Dunstan Jewelers, Ltd.
Dupont	502	Dupont Jewelers.
Dupont	343	Dupont Jewelers.
E.S.S.	60	E.S.S., Inc.
Earl	151	Cindi Earl Fine Jewelry.
Earth	287	Earth Resources.
Ecco	329	Ecco High Frequency Corporation.
Eclipse	12	Eclipse Studio.
Ed Mar	597	Ed Mar Crystal & Jewelry Co. Inc.
Edward	504	George Edward Jewelers.
Edwards	199	J & L Edwards Designs.
Ehrhardt's	72	Ehrhardt's Enterprises.
Ehrlinspiel	110	Egon Ehrlinspiel.
Eichberg	681	E. Eichberg Jewelers, Inc.
Eichhorn	746	Eichhorn Jewelry, Inc.
Elan	789	Elan Ltd.
Elegance	34	Elegance Jewelry.
Elements	658	Elements Ltd.
Emrick	297	Emrick Jewels.
Endicott	525	Hudson Endicott.
Endris	513	J.O. Endris & Son Jewelers.
Engelhard	593	Engelhard-Clal.
Engelhard-Clal	193	Engelhard-Clal.
Erickson	95	Erickson & Erickson.
Estate	165	Estate Jewelry.
Eurocraft	158	Eurocraft.
Facet	377	Cab N Facet Fine Jewelry.

APPENDIX—LIST OF COMMENTERS AND ABBREVIATIONS—Continued

Abbreviation	No.	Commenter
Factory's	122	Factory's Inc.
Fast-Fix	398	Fast-Fix Jewelry Repairs.
Fedra	176	Fedra, International.
Fell	541	David H. Fell & Co. Inc.
Ferguson	71	T. Ferguson.
Fernando	707	Creations by Fernando.
Fey	364	Fey & Company Jewelers.
Finely's	676	George Finely's Jewelers.
Finest	556	Finest Casting & Service LLC.
Finishing	641	Finishing Touches.
Fisher	530	Robert S. Fisher & Company.
Five Star	786	Five Star Jewelers.
Flash	48	Flash Manufacturing.
Fogg	292	F.D. Fogg & Co.
Fojt	299	J. Fojt Originals.
Ford	369	Ford, Gittings & Kane Jewelers.
Forest	26	Forest Jewelers.
Fortunoff	458	Fortunoff.
Foster	589	T. Foster & Co.
Four Stars	656	Four Stars.
Four Stars	173	Four Stars.
Fox	210	Debbie S. Fox.
Fox's	674	Fox's Gem Shop.
Fox's	726	Fox's Gem Shop.
Fox's	723	Fox's Gem Shop.
Fox's	727	Fox's Gem Shop.
Fox's	722	Fox's Gem Shop.
Fox's	721	Fox's Gem Shop.
Fox's	672	Fox's Gem Shop.
Fox's	673	Fox's Gem Shop.
Fox's	725	Fox's Gem Shop.
Fox's	671	Fox's Gem Shop.
Fox's	724	Fox's Gem Shop.
Fox's	728	Fox's Gem Shop.
Francis	216	Michael Francis Co.
Francis	215	Michael Francis Co.
Frank	449	David Frank.
Franz	501	Franz Jewelers Ltd.
Frasca	211	Frasca Jewelers.
Fredericks	73	Phillips & Fredericks Jewelers.
Freeman	797	Freeman Jewelers.
Frei	536	Frei & Borel.
French Jewels	664	The French Jewels.
Freund	188	Freund Jewelers.
Friedheim	355	Bess Friedheim Jewelry.
Friesen's	311	Friesen's Jewelers.
Fuller	194	Fuller Findings.
Future Ring	424	Future Ring Corporation.
G & G	201	G & G Diamond Brokers.
G.N.K.	470	G.N.K. Co.
Gallery	416	The Jeweler's Gallery.
Gannaway	161	Gannaway Bros. Jewelry.
Gasser	308	John Gasser & Son.
Gasser	147	John Gasser & Son.
Geiss	663	Geiss & Sons.
Gem Society	741	American Gem Society.
Gem Lab	274	The Gem Lab.
Gem East	739	Gem East Corporation.
Gem Wave	347	Gem Wave, Inc.
Gem Classics	668	Gem Classics, Ltd.
Gem Smith	544	The Gem Smith Inc.
Gem Vest	627	Gem Vest.
Gemma	698	Gemma Gallery.
Gems	207	Gems & Treasures.
Gemsmith	203	Gemsmith Design Gallery Jewelry.
Gemstone	586	Gemstone Creations.
General	699	General Findings.
GIA	659	Gemological Institute of America.
Giganti	114	Giganti Jewelers.
GIJ	705	Gemologist International Jewelry.
Ginsberg	468	M.C. Ginsberg Jewelers, Inc.
Gioielli	682	Arata Gioielli.

APPENDIX—LIST OF COMMENTERS AND ABBREVIATIONS—Continued

Abbreviation	No.	Commenter
Glasser	337	Gemillion Casting Inc.
Gleim	539	Gleim the Jeweler.
Glenn Bletz	224	Glenn Bletz & Associates.
Godfrey	113	Godfrey Jewelers.
Gold Works	651	Gold Works.
Gold Rush	30	The Gold Rush.
Gold Button	462	Gold Button Jewelers, Inc.
Gold Arts	653	Gold Arts.
Gold	118	Gold-N-Designs.
Gold Art	552	Gold Art Handmade Jewelry.
Gold	119	Gold-N-Designs.
Golden Crown	233	Golden Crown Jewelers.
Golden's	234	Golden's.
Goldex	339	Goldex Fine Jewelry.
Goldin	403	Goldin Jewelers Inc.
Goldman	753	Goldman.
Goldman	611	Frederick Goldman, Inc.
Goldsmith	231	Michael's Goldsmith Service, Inc.
Goldsmith	380	Goldsmith Jewelers.
Goldsmiths	679	Brown Goldsmiths.
Goldworks	584	The Goldworks.
Good	792	Michael Good Designs, Inc.
Goodman	509	Goodman & Sons Jewelers.
Goodwin	784	Goodwin Manufacturing.
Goph	386	Goph & Co.
Goph Albitz	385	Goph Albitz Designs.
Gordon	44	Samuel Gordon Jewelers & Diamond.
Gottlieb	257	Gottlieb & Sons, Inc.
Gould	56	Gould's Diamonds & Jewelry.
Gould's	271	Gould's Diamonds & Jewelry.
Grader	17	Grader Jewelers.
Graubart	322	Maurice B. Graubart & Sons, Jewelers.
Gravano	68	John Gravano & Co.
Grebitus	581	Grebitus & Sons Jewelers.
Grebitus	517	Grebitus & Sons Jewelers.
Green	644	Lux Bond & Green.
Greenfield	195	Greenfield Jewelers.
Gross	256	H.L. Gross & Bros.
Grossman	83	Gale Grossman.
Grove	514	Diamonds in the Grove.
Grunos	795	Grunos of Rockford.
H & H	600	H & H Design.
H. & H.	660	H. & H. Jewels, Inc.
Hadley	751	A.H. Hadley & Co.
Hadley	752	A.H. Hadley & Co.
Haimoff	652	Haimoff & Haimoff.
Hale's	516	Hale's.
Halina	116	Halina Fuchs.
Haltom	245	Mary Haltom Jeweler.
Hamilton	393	Hamilton Jewelers.
Hammond's	729	Hammond's.
Hands	578	Hands Jewelers.
Hank	177	Hank & Co.
Hansen	335	Hansen Designs.
Hardy's	613	Hardy's Diamonds.
Harold's	767	Harold's Jewelry Inc.
Harold's	557	Harold's Jewelry Inc.
Hartmann	793	Hartmann Jewelers.
Hartsfield	572	B. Sanfield, Inc.
Hauser	383	Hauser & Miller Company.
Hauser's	774	Hauser's Jewelers.
Hawken	629	Armetrout-Hawken.
Hayman	184	David Hayman Jewelers.
Hebblethwaite	353	Hebblethwaite.
Heer	677	Jandina Heer.
Heffern	560	Elleard B. Heffern, Inc.
Heffern	561	Elleard B. Heffern, Inc.
Heier	624	Heier Resources.
Heller	33	Heller Antiques Ltd.
Henri's	85	Henri's Jewelry Co.
Heron	328	G.B. Heron.
Herrud	92	Herrud Jewelers.

APPENDIX—LIST OF COMMENTERS AND ABBREVIATIONS—Continued

Abbreviation	No.	Commenter
Herteen	508	Herteen & Stocker.
Heyman	397	Oscar Heyman & Brothers, Inc.
Higgins	621	Higgins Jewelers.
Hill	11	Hill Jewelers.
Holder	40	Mark Holder Jeweler.
Holland's	607	Holland's.
Hollis	531	Hollis & Company Jewelers.
Hollis	467	Hollis & Company Jewelers.
Hollis	532	Hollis & Company Jewelers.
Hoover	479	Hoover & Strong.
Horwitz	100	Horwitz Jewelers.
Houck's	319	Houck's Jewelry.
Houston	65	Houston Gold Exchange.
Houston	266	Houston Jewelers.
Houston	164	Houston Jewelry.
Howard's	357	Howard's Mfg. Jewelers.
Huffords	588	Huffords Jewelry, Inc.
Hunter	93	Johannes Hunter Jewelers.
Hunters	441	Hunters Jewelers Ltd.
Hunter's	98	Hunter's Jewelers Ltd.
Hurst	763	Berwyn Jewelers, Inc.
Illumina	387	Illumina Gallery.
Indigo	31	Indigo Gallery.
Indorf	167	Peter Indorf Jewelers.
Inlow	490	Inlow Designs Jewelers.
Inter Gold	693	Inter Gold (India) Limited.
Int'l. Soc. App.	791	International Society of Appraisers.
Isis	406	Isis Jewelers Inc.
Itelman	277	Herco.
J. Dery	237	J. Dery Jewelers.
Jacart	162	Jacart Gold Exchange.
Jain	683	Inter Gold (India) Limited.
JAS	375	JAS Jewelers, Inc.
Jeannie's	390	Jeannie's Jewelry & Design.
Jewel Box	474	The Jewel Box.
Jeweler	198	Jeweler to the Trade, Inc.
Jewelers	62	Jewelers Workshop.
Jewelers, Inc.	646	Jewelers of America, Inc.
Jeweler's Bench	742	Jeweler's Bench.
Jeweler's Bench	769	Jeweler's Bench.
Jewelry Designer	770	Jewelry Designer.
Jewels	505	Jewels Salon & Boutique.
JIC	758	Jewelry Information Center.
Joaillier	24	Fred Joaillier, Inc.
Johnson Matthey	396	Johnson Matthey.
Johnson	220	Johnson Gems.
Joliff	678	The National Association of Jewelry Appraisers.
Jolly's	249	Jolly's Jewelers and Silversmiths.
Jones	81	Jones & Jones Jewelers.
Jones	75	Jones & Jones Jewelers.
Jones	569	Indigo Gallery.
Jordan	631	Facets.
Josephson	579	C.I. Josephson Jewelers.
Jostens	493	Jostens.
JRB	632	Jeweler's Resource Bureau.
Juniker	121	Juniker Jewelry Co.
JVC	433	JVC Ferrara Co., Inc.
Kaiser	495	Johann Kaiser.
Kam	338	Wayne Kam Goldsmith.
Kamen	407	Robert C. Kamen.
Kaplan	643	Lazare Kaplan.
Karat Gold	183	Karat Gold Corner.
Karat	170	Karat Gold Jewelers.
Karat Patch	208	Karat Patch Jewelry, Inc.
Karen's	731	Karen's Jewelers.
Kazto	592	Kazto.
Keepsake	74	JC Keepsake, Inc.
Keith	5	Keith, Inc.
Kelley	428	Kelley Jewelers.
Kelley	429	Kelley Jewelers.
Kelrick	587	Finger Mate, Inc.
Kelrick	796	Finger Mate, Inc.

APPENDIX—LIST OF COMMENTERS AND ABBREVIATIONS—Continued

Abbreviation	No.	Commenter
Kendall	800	Kendall Gemological Services, Inc.
Kendrick	294	Merkley Kendrick.
Kendrick	669	Merkley Kendrick.
Kerr	591	Kerr Jewelry Division.
Keystone	143	Keystone Findings, Inc.
Khamis	213	Khamis Fine Jewelers.
Kiger	27	Keppie Kiger.
Kingsgate	333	Kingsgate Diamonds, Inc.
Kirk	28	Kirk Jewelers.
Kizer	415	Kizer Cummings Jewelers.
Klecka	10	Paul Klecka.
Klecka	485	Paul Klecka.
Klima	120	Tyler Klima.
Knights	365	Norm Knights.
Knowles	422	Knowles.
Kohler's	344	Kohler's Fine Jewelry.
Kokkelers	340	Kokkelers.
Kolman	440	Kolman Jewelers.
Krementz	798	Krementz & Co.
Krenikow	719	International Colored Gemstone Association.
Kreuter	489	Jack Kreuter Jewelers.
Krieger	309	Hans D. Krieger.
Krieger	776	Hans D. Krieger.
Kuhn	444	Kuhn, Inc.
La Prad	341	Robert E. La Prad.
Lacert	755	William H. Lacert.
Lacher	409	J.B. Lacher, Inc.
Lacy	735	Lacy & Co.
Lambert	399	Bruce Lambert.
Landau	61	J. Landau, Inc.
Leach	650	Leach & Garner.
Leber	45	Leber Limited.
Leitzel's	238	Leitzel's Jewelry.
Leon's	124	Leon's Jewelers.
Levin	29	Jack A. Levin.
Levy	457	Levy Jewelers.
Levy	262	Levy Jewelers.
Lieberfarb	253	Lieberfarb, Inc.
Liska	733	David W. Liska Co.
Living Stones	778	Living Stones Enterprises.
Lone Star	55	Lone Star Gold Exchange.
Long	373	Long Jewelers.
Lord	314	Lord of the Rings.
Love's	466	Love's.
Luxor	150	Luxor Jewelers, Inc.
M & M	475	M & M Jewelry Repair.
M & J	714	M & J Jewelry.
M.J. Reed	302	M.J. Reed Jewelers.
M.J.	622	M.J. Jewellers Ltd.
MAB	716	MAB Jewelers.
Magnon	620	Magnon Jewelers.
Mandarin	25	Mandarin Gems.
Mangan	51	Mangan Jewelers.
Mangan	52	Mangan Jewelers.
Mark Michael	637	Mark Michael Designs, Inc.
Mark Diamonds	286	Mark Diamonds Jewelers.
Markides	780	Markides Jewelers.
Marla	155	Gregg Marla Co.
Marshalls	247	Marshalls of Milford, Jewelers.
Marshall's	246	Marshall's.
Mart	417	Cal. Jewelry Mart.
Martin	99	A.J. Martin.
Marvin	605	Marvin & Sons.
Marvin	657	Marvin & Sons.
Marvin	478	Marvin & Sons.
Marvin	452	Marvin & Sons.
Maslan	9	Richard Maslan & Company.
Master	465	Master Goldsmiths.
Master	106	Master Goldsmith Collection.
Masters	157	Color Masters.
Masters	649	Masters.
Mathews	281	C. Mathews Design.

APPENDIX—LIST OF COMMENTERS AND ABBREVIATIONS—Continued

Abbreviation	No.	Commenter
Mathews	779	C. Mathews Design.
Matlick	734	Penny Matlick Fine Jewelry Company.
Mayfield's	754	Mayfield's Co.
McArthur	617	McArthur Jewelers.
McFadden	168	William F. McFadden, Inc.
McKay	401	Bruce McKay.
McKeller	618	Aay McKeller.
McMullen	139	J. McMullen Jewelry.
Measetique	362	Measetique Jewels.
Mednikow	296	Mednikow.
Megginson	790	Megginson Fine Jewelers.
Megginson	787	Megginson Fine Jewelers.
Mel	130	Mel's Diamond House.
Michaels	601	Michaels Jewelers.
Michael's	573	Michael's Jewelers.
Michael's	136	Michael's Jewelers.
Mike	700	Mike Hullingsurt.
Mirjam	768	Mirjam Butz & Brown Jewelers.
Mithril	692	Mithril, Ltd. Jewelers.
MJSA	799	Manufacturing Jewelers & Silversmiths of America.
Modern	538	Modern Diamond Jewelry.
Moeller	670	R.F. Moeller Jeweler.
Molberg's	633	Molberg's, Inc.
Molina	533	Molina.
Montanari	642	Montanari.
Montgomery	342	Ned V. Montgomery.
Moore's	689	Moore's Jewelers.
Moose	757	Frank L. Moose Jeweler, Inc.
Moretti's	576	Moretti's Fine Jewelry.
Morgan's	623	Morgan's Jewelers.
Morrissey	269	Morrissey Fine Jewelry.
Moses	647	Moses Jewelers.
Moses	445	Moses Jewelers.
Mossner	240	Mossner.
Moyer	619	Moyer Jewelers, Inc.
Moyer	145	Moyer & Co.
MSK	323	MSK Designs.
Mulhollen	135	Mulhollen Jewelry Design.
Mullen	57	Mullen Bros. Jewelers.
Muller	352	Muller Jewelers.
MWM	450	MWM Goldsmithing.
Mystik	697	Mystik Jewellery.
Nakamura	313	Jerry M. Nakamura & Sons.
Nathan	553	Nathan Design.
Nature's 10	596	Nature's 10 Jewelers.
Nature's 10	565	Nature's 10 Jewelers.
Nature's 10	595	Nature's 10 Jewelers.
Nature's 10	594	Nature's 10 Jewelers.
Nature's 10	567	Nature's 10 Jewelers.
Nature's 10	566	Nature's 10 Jewelers.
Nature's 10	563	Nature's 10 Jewelers.
Nature's 10	564	Nature's 10 Jewelers.
Nature's 10	562	Nature's 10 Jewelers.
Nazarian	603	R.S. Nazarian Jewelry Manufacturing.
Neiman	22	Neiman Jewelers.
Neiman	775	Neiman Marcus.
Nelson	395	Ken Nelson.
Nengelken	590	Niessing.
New York	408	New York Jewelers and Collateral Co.
Newton	547	Newton Industries, Inc.
Nicholls	736	Paradise Jewelry.
Nordstrom	666	Nordstrom.
Norris	54	Norris Jewelers, Inc.
Northern	91	Northern Light Gems.
Novell	181	Novell Enterprises, Inc.
Novell	180	Novell Enterprises, Inc.
Novell	182	Novell Enterprises, Inc.
Numis	197	Numis International, Inc.
OGL	691	Ohio Gemological Laboratory, Inc.
Old World	18	Old World Jewelers.
Olde	112	Olde World Jewelers.
Olson	706	Cynthia Olson Jewelry.

APPENDIX—LIST OF COMMENTERS AND ABBREVIATIONS—Continued

Abbreviation	No.	Commenter
Omega	306	Omega Casting Corporation.
Opulence	268	Opulence.
ORA	348	ORA Designers.
Orange Blossom	189	Orange Blossom Jewelers.
Orin	534	Orin Jewelers, Inc.
Orlando	146	Joseph C. Orlando, Inc.
Ostbye	366	Ostbye & Anderson Ultrablue Mfg.
Ostling	640	Ostling & Brooks, Ltd.
OWJ	359	OWJ
Pace	141	Pace Jewelers, Inc.
Pace	425	Pace.
Pacific	327	Pacific Gemological Laboratory, Inc.
Padilla	191	Padilla Jewelers.
Palmieri	772	D.A. Palmieri Co., Inc.
Palo Alto	196	Diamonds of Palo Alto.
Panther	500	Platinum Panther.
Paradise	749	Paradise.
Paradise	702	Paradise Associates.
Parker	50	Curt Parker, Inc.
Parker	738	Curt Parker, Inc.
Parker	737	Curt Parker, Inc.
Pasdera	37	Pasdera Custom Jewelers.
Patton	481	R&I Patton.
Pattons	419	Pattons.
Pattons	418	Pattons.
Pavlotzky	766	George L. Pavlotzky & Son, Inc.
Pearlman's	498	Pearlman's.
Pegasus	554	Pegasus Jewelry.
PeJay	154	PeJay Creations Ltd.
Pejois	381	Pejois, Inc.
Perret	71	Etienne Perret.
Peters	701	Handy & Harman.
PGI	272	Platinum Guild International USA Jewelry Inc.
PGI	718	Platinum Guild International USA Jewelry, Inc.
PGI	378	Platinum Guild International USA Jewelry Inc.
PGI	391	Platinum Guild Int'l. USA Jewelry Inc.
Phillip	464	Phillip Original Jewelry.
Phillippus	175	Phillippus.
Phillippvs	615	Phillippvs & Co. Inc.
Pilcher	212	Pilcher Jewelry Company.
Plante	350	Plante Jewelers.
Platinum Unlimited	583	Platinum Unlimited Inc.
Platinum Plus	636	Platinum Plus Jewelry, Inc.
Plumb	524	Plumb Gold Ltd.
Plumb	431	Plumb Gold Ltd.
Potichke	430	Linda Potichke Jewelry Design.
Prospector	712	The Prospector, Inc.
Prospector	713	The Prospector, Inc.
ProVockative	223	ProVockative Gems, Inc.
Purvis	267	Purvis Jewelers.
Quality	472	Quality Casting Inc.
Quinn's	555	Quinn's Goldsmith.
Rafinity	384	Rafinity.
Raskin	527	Kemp Metal Products, Inc.
Rawlings	732	Rawlings Jewelry.
Raymond	59	Raymond Lee Jewelers.
Refined	41	Refined Designs.
Refractal	694	Refractal Design, Inc.
Reising	421	Reising International Inc.
Republic	667	Republic Metals Corporation.
Restifo's	152	Restifo's Jewelry Laboratory.
Restifo's	487	Restifo's Jewelry Laboratory.
Reuschleiz	94	C.F. Reuschleiz, Inc.
Reznikov	78	Reznikov's.
Richards	602	Anne Richard Designs.
Richard's	115	Richard's Jewelry.
Rivclan	496	Sandy Rirdon Peweters.
Robann's	186	Robann's Jewelers.
Robbins	376	Bernie Robbins.
Robbins	125	Bernie Robbins Fine Jewelry.
Robins	169	Robins Jewelers.
Robinson	499	Barnett Robinson, Inc.

APPENDIX—LIST OF COMMENTERS AND ABBREVIATIONS—Continued

Abbreviation	No.	Commenter
Roni	178	Roni Jewel
Root	360	C. Kirk Root Designs.
Root	414	C. Kirk Root Designs.
Roth	455	Karen Roth.
Royal	107	Royal Jewelers, Inc.
Royal	307	Royal Jewelry Mfg. Inc.
Royston	750	Royston Jewels.
Rubel	484	Fredric H. Rubel.
Rudolf	806	OE Design.
Rummele's	123	Rummele's Jewelers.
Rutledge	747	Neil Rutledge & Co.
RV Coin	166	RV Coin & Jewelry Exchange.
Sadovsky	480	Mark Sadovsky Jeweler.
Sammartino	546	Diamonds by Sammartino Sisters, Inc.
Sammor	349	Sammor.
Samuel	612	Samuel Jewels, Inc.
San Diego	132	Manufacturing Jewelers of San Diego.
Sandberg	228	Sandberg & Sikorski.
Sandberg	411	Sandberg & Sikorski Corporation.
Sawyer	23	George Sawyer Design.
Saxon	626	Saxon.
Schalla	209	Schalla Jeweler.
Schechter	451	Honora Industries, Inc.
Scheherazade	427	Scheherazade.
Schmidt	251	R.J. Schmidt.
Schmitt	142	Adam Schmitt.
Schoenke	300	Platinum Jewelers.
Schoenke	604	Platinum Jewelers.
Schwanke	64	Schwanke-Kasten Jewelers.
Schwartz	709	Charles Schwartz.
Schwarzschild	764	Schwarzschild Jewelers.
Servis	16	Servis and Taylor Jewellers.
Servis	282	Servis & Taylor Jewellers.
Servis	326	Servis & Taylor Jewellers.
Sheftall	140	The Sheftall Co..
Shelton	518	Shelton Jewelers, Ltd.
Shersher	374	Casting Platina Services.
Shersher	1	Casting Platina Services.
Shiboski	598	Shiboski.
Siegel	315	Siegel Jewelers.
SIGI	454	SIGI Design.
Signatures	321	Signatures.
Silver	276	Michael Jewelers.
Silver House	330	Silver House & Co. International, Inc.
Silvergate	794	Silvergate Farms.
Sipe	21	J.C. Sipe Jewelers.
Sipe	20	J.C. Sipe Jewelers.
Sipe	19	J.C. Sipe Jewelers.
Sissy's	559	Sissy's Log Cabin.
Sites	434	Sites Jewelers.
Skipped	540	Skipped number.
Skomaroske	575	JoAnn Skomaroske.
Smith	762	Winston Studio & Imports.
Smith & Bevill	324	Smith & Bevill Jewelers, Inc.
Smith	42	Robert Smith Jeweler, Inc.
Smyth	111	Albert S. Smyth Company, Inc.
Snyder	773	Snyder Jewelers.
Snyder	86	Wixon Jewelers.
Solomons	405	Solomons Jewelers.
Solover	367	Solover Jewelers Inc.
Sordo	447	Olivia Sordo.
Southeast Gem	745	Southeast Gemological Laboratory.
Spirer-Somes	15	Spirer-Somes Jewelers.
Spirit	655	Spirit of the Earth.
Spreckman	105	Hy Spreckman & Sons, Inc.
St. Clair	202	St. Clair Jewelers.
Stadheim's	426	Stadheim's.
Stanley	239	Stanley Jewelers Gemologist, Inc.
Starfire	488	Starfire Gems.
Stepan-Hill	740	Stepan-Hill Jewelry Designers.
Steven's	345	Harold Steven's Jewelers, Inc.
Stuller	630	Stuller.

APPENDIX—LIST OF COMMENTERS AND ABBREVIATIONS—Continued

Abbreviation	No.	Commenter
Sturgill	67	P.R. Sturgill.
Sturhan	278	Sturhan Jewelers.
Sullivan	703	Artcarved Bridal Jewelry.
Suna	801	Suna Bros., Inc.
Sunburst	704	Sunburst Jewelers.
Suncoast	803	Suncoast Gem.
Sunshine	783	Shrarlol Sunshine.
Sutter's	420	Sutter's.
Swanson	684	Swanson Jewelers, Inc.
Sweet	172	Howard H. Sweet & Son.
Symmetry	254	Symmetry Jewelers.
Tallmon's	258	Tallmon's Diamondland.
Talner	448	Leonard Talner Jewelers, Inc.
Tanner	192	O.C. Tanner.
Tavernier	781	Tavernier Enterprises.
Taylor	2	Grady G. Taylor Jewelry, Inc.
Terry	279	Terry & Bess.
Thomas Joseph	320	Thomas Joseph & Sons.
Tiffany	761	Tiffany & Co.
Tiga	66	Tiga, Inc.
TIGA	412	TIGA Inc.
Toback	645	Myron Toback, Inc.
Toby's	648	Toby's Gems & Treasures.
Toenniges	190	Toenniges Jewelers, Inc.
Tompkins	346	Tompkins, Inc.
Towne	284	Towne Jewelers.
TQ	400	TQ Diamonds.
Traditional	526	Traditional Jewelers.
Tripp	138	Tripp Jewelry & Sculpture.
Tripton	368	Tripton Fine Jewelry, Inc.
Turgeon	609	Turgeon Raine Jewellers, Inc.
Turi	446	Charles Turi Jewelry Co.
Tyrony	356	Tyrony Jewelers.
Underwood's	244	Underwood's Fine Jewelers.
Underwood's	477	Underwood's Fine Jewelers.
Unique	227	Unique Designs.
Unsigned	402	Unsigned Letter.
Upton	432	Bill Upton.
Urban	574	Urban Jewelers.
Valente	771	Valente Jewelers.
Ventro	625	Donaldo & Heidi Ventro.
Village Goldsmith	804	The Village Goldsmith, Inc.
Village	520	Village Coin Shop, Inc.
Vincent	389	S. Vincent Jeweler, Inc.
Vista's	53	Vista's Fine Jewelry.
Vulcan's	265	Vulcan's Forge.
Wachler	7	David Wachler & Sons Jewellers.
Wachler	363	David Wachler & Sons Jewellers.
Wachler	8	David Wachler & Sons Jewellers.
Walters	410	Walters & Hogsett.
Walzel	200	Cherryll Walzel Collections.
Ward	685	Krinkle Horn.
Warner	522	Warner Co. Jewelers.
Watkins	628	John Watkins.
Watkins	616	John Watkins.
Wayne	688	Wayne Jewelers & Silversmiths, Inc.
Wayne	76	Wayne Jewelers & Silversmiths, Inc.
Westphal	331	Westphal Jewelers.
White	351	Jeffrey H. White.
Whitney Boin	744	Whitney Boin Studio.
Whitney	748	The Whitney Way.
Williams	187	Williams Jewelers.
Williams	77	Williams Distinctive Gems.
Willowdale	242	Willowdale Studio.
Wilson	304	Wilson Fine Jewelers.
Wilson	570	Michael Wilson.
Wilson	225	Wilson Diamonds.
Wimberly	318	Wimberly Jewelers.
Winc	662	Winc Creations.
Winward	261	Winward Corporation.
Wolls	507	Fran Wolls.
Worthington	503	Will Worthington Jewelers.

APPENDIX—LIST OF COMMENTERS AND ABBREVIATIONS—Continued

Abbreviation	No.	Commenter
Wright	259	Wright & Lato, Inc.
Wright's	69	Wright's Jewelers.
Wyman	358	Wyman Jewelers, Inc.
Yanke	717	Yanke Designs.
York	756	Christine York.
Zane	542	Zane Design.
Zerbe	293	Zerbe Jewelers Inc.
Zimmer	230	Zimmer Brothers.
Zoltan	134	Zoltan David.

[FR Doc. 97–8942 Filed 4–7–97; 8:45 am]
BILLING CODE 6750–01–P

COMMODITY FUTURES TRADING COMMISSION

17 CFR Part 30

Foreign Futures and Option Transactions

AGENCY: Commodity Futures Trading Commission.

ACTION: Order.

SUMMARY: The Commodity Futures Trading Commission (''Commission'' or ''CFTC''), subject to the conditions specified below, is:

granting an exemption to designated members of the MEFF Sociedad Rectora de Productos Financieros Derivados de Renta Variable (the ''Exchange'' or ''MEFF Renta Variable'') of Spain from the application of certain of the Commission's foreign futures and option rules based on substituted compliance with certain comparable regulatory and self-regulatory requirements of a foreign regulatory authority.

This Order is issued pursuant to Commission rule 30.10, 17 CFR 30.10, which allows certain persons to petition the Commission for exemption from the application of certain of the rules set forth in Part 30, and authorizes the Commission to grant such petition if the exemption is not otherwise contrary to the public interest or to the purposes of the provisions from which exemption is sought.

EFFECTIVE DATE: May 8, 1997.

FOR FURTHER INFORMATION CONTACT: Jane C. Kang, Esq., or Robert H. Rosenfeld, Esq., Division of Trading and Markets, Commodity Futures Trading Commission, Three Lafayette Centre, 1155 21st Street, N.W., Washington, D.C. 20581. Telephone: (202) 418–5430.

SUPPLEMENTARY INFORMATION: On July 23, 1987, the Commission adopted final rules governing the domestic offer and sale of commodity futures and option contracts traded on or subject to the rules of a foreign board of trade. 52 FR 28980 (August 5, 1987). These rules, which are codified in Part 30 of the Commission's regulations, 17 CFR Part 30, generally extend the Commission's existing customer protection regulations for products offered or sold on contract markets in the United States to foreign futures and option products [1] sold to United States customers by imposing requirements with respect to registration, disclosure, capital adequacy, protection of customer funds, recordkeeping and reporting, sales practice and compliance procedures that are generally comparable to those applicable to wholly domestic transactions.

In formulating a regulatory program to govern the offer and sale of foreign futures and option products to United States customers, the Commission, among other things, considers the potential extraterritorial impact of such a program and the desirability of avoiding duplicative regulation of firms engaged in international business. Based upon these considerations, the Commission, as set forth in Commission rule 30.10, determined to permit persons located outside the United States and subject to a comparable regulatory structure in the jurisdiction in which they are located to seek an exemption from certain of the requirements imposed by the Part 30 rules based upon substituted compliance with the comparable regulatory requirements imposed by the foreign jurisdiction.

In issuing orders under rule 30.10, the Commission evaluates whether the particular foreign regulatory program provides a basis for permitting substituted compliance for purposes of exemptive relief pursuant to Commission rule 30.10. The specific elements examined are set forth in Appendix A to Part 30, ''Interpretative Statement With Respect to the Commission's Exemptive Authority Under Section 30.10 of Its Rules'' (''Appendix A''). 17 CFR Part 30, Appendix A. These elements include: (1) Registration, authorization or other form of licensing, fitness review or qualification of persons (both individuals and firms) through which customer orders are solicited and accepted; (2) minimum financial requirements for those persons who accept customer funds; (3) protection of customer funds from misapplication; (4) minimum sales practice standards, including the disclosure of the risks of futures transactions; (5) recordkeeping and reporting requirements; (6) procedures to audit for compliance with, and to take action against those persons who violate, the requirements of the program; and (7) the existence of appropriate information-sharing arrangements. The Commission may apply additional conditions to ensure that brokers licensed under other regulatory regimes are not permitted to solicit U.S. customers while effectively evading U.S. requirements, such as those relative to statutory disqualification.

Moreover, the Commission specifically stated in adopting rule 30.10 that no exemption based on substituted compliance of a general nature would be granted unless the persons to whom the exemption is to be applied: (1) Consent to jurisdiction in the United States and designate an agent for service of process in the United States with respect to transactions subject to Part 30 by filing a copy of the relevant agency agreement with the National Futures Association (''NFA''); (2) agree to make their books and records available in the United States to Commission and Department of Justice representatives; and (3) notify NFA of

[1] Commission rule 30.1(a), 17 CFR 30.1(a), defines the term ''foreign futures'' as ''any contract for the purchase or sale of any commodity for future delivery made, or to be made, on or subject to the rules of any foreign board of trade.''

Commission rule 30.1(b), 17 CFR 30.1(b), defines the term ''foreign option'' as ''any transaction or agreement which is or is held out to be of the character of, or is commonly known to the trade as, an ''option,'' ''privilege,'' ''indemnity,'' ''bid,'' ''offer,'' ''put,'' ''call,'' ''advance guaranty,'' or ''decline guaranty,'' made on or subject to the rules of any foreign board of trade.''

the commencement or termination of business in the United States.[2]

By letter dated July 28, 1995,[3] the Exchange requested that the Commission exempt under Commission rule 30.10 certain members of the Exchange from compliance with Part 30's registration and other requirements with respect to brokerage activities undertaken on behalf of customers in the United States involving futures products and options thereon authorized for sale to U.S. customers. Currently, such products are the IBEX–35 Plus futures contracts and options thereon [4] traded on or subject to the rules of MEFF Renta Variable.[5]

ORDER: The Commission is hereby issuing the following order:

ORDER UNDER CFTC RULE 30.10 EXEMPTING DESIGNATED MEMBERS OF THE MEFF RENTA VARIABLE FROM THE APPLICATION OF CERTAIN OF THE FOREIGN FUTURES AND OPTION RULES THE LATER OF THIRTY DAYS AFTER PUBLICATION OF THE ORDER HEREIN IN THE **FEDERAL REGISTER** OR AFTER THE FILING OF RELEVANT CONSENTS BY MEMBERS OF THE EXCHANGE AND EXCHANGE UNDER THE TERMS AND CONDITIONS OF THIS ORDER.

The Commission has reviewed the information and representations contained in, among other things, the following submissions:

—Petition dated July 28, 1995;

—Letter dated November 26, 1996 and attachments from Jose Massa, Director General and C.E.O., MEFF Renta Variable (''MEFF Renta Variable, November 26, 1996'') which specifically incorporates by reference the following material previously submitted in connection with the application of MEFF Renta Fija for rule 30.10 relief and confirming that any representations or undertakings made in those documents will apply equally to MEFF Renta Variable:

—Petition dated May 14, 1993 from MEFF Renta Fija;

—The Spanish Securities Market Act 24/1988;

—Royal Decree 1814 Governing Official Futures and Options Markets;

—Royal Decree 629/1993 of May 3, 1993 ''Concerning the Regulations Governing Participation in the Stock Markets and Obligatory Registers of Transactions;''

—MEFF Renta Variable Articles of Association (1992);

—MEFF Renta Variable Rules and Regulations;

—Letters dated October 1, 8, and 15, 1993; December 23, 1993; August 26, 1994; December 20, 1994; and January 31, 1995, from Philip McBride Johnson, Skadden, Arps, Slate, Meagher & Flom, counsel for the Exchange;

—Letters dated May 19, 1994 and September 28, 1994 from the Comision Nacional del Mercado de Valores (''CNMV''); and

—Letter dated January 12, 1995 from MEFF Renta Fija.

The above letter dated November 26, 1996 further confirmed the accuracy and application of statements concerning exchange operations and regulation made in the Division's Memorandum dated April 24, 1995 regarding MEFF Renta Fija's rule 30.10 application to MEFF Renta Variable, and specifically undertook certain undertakings with respect to information sharing.

—Letter dated February 29, 1996 and attachments, from the Comision Nacional del Mercado de Valores (''CNMV, February 29, 1996''), specifically confirming the continued applicability of all representations previously made by the CNMV to the Division in connection with the application of MEFF Renta Fija for rule 30.10 relief to the application of MEFF Renta Variable.

Based upon its review of the above supporting materials as set forth in the Division's memorandum dated March 24, 1997, the Division's memorandum dated April 24, 1995 in connection with MEFF Renta Fija which, subject to certain clarifications submitted by MEFF Renta Variable and the CNMV, continues to accurately describe the operation of and regulatory structure applicable to MEFF Renta Variable,[6] and subject to the conditions set forth below, the Commission has determined to issue this Order which will become effective the later of thirty days after publication of this Order in the **Federal Register** or the filing of consents by members of the Exchange and the Exchange to the terms and conditions of the Order herein.

Subject to the conditions set forth below, the Commission concludes that the standards for relief set forth in Commission rule 30.10 and, in particular, Appendix A thereof, have generally been satisfied and that compliance with the SMA, R.D. 1814, R.D. 629 and MEFF Renta Variable and CNMV rules may be substituted for compliance with certain sections of the Act as more particularly set forth herein. By this Order, the Commission hereby exempts, subject to specified conditions, those firms identified to the Commission as eligible for the rule 30.10 relief granted herein from registration with the Commission based upon substituted compliance by such firms with the applicable statutes and relevant Exchange and other rules in effect in Spain.

This determination to permit substituted compliance is based on, among other things, the Commission's finding that the regulatory scheme governing the persons trading on the Exchange who would be exempted hereunder provides:

(1) A system of qualification or licensing of firms and persons who deal in transactions subject to regulation under Part 30 that includes, for example, criteria and procedures for granting, monitoring, suspending and revoking licenses, and provisions for requiring and obtaining access to information about licensees;

(2) Financial requirements for licensees;

(3) A system for the protection of customer funds that applies to all customers and which requires the separate accounting for such funds, augmented by funds designed to compensate customers who have suffered a loss as a result of fraud or insolvency or other failure of an Exchange member;

(4) Recordkeeping and reporting requirements pertaining to financial and trade information including, without limitation, order tickets, trade confirmations, customer account statements, customers' deposit records, and accounting records for customer and proprietary trades;

(5) Sales practice standards for licensees which include, for example, required disclosures to prospective customers and prohibitions on (a) certain representations, (b) conflicts of interest, and (c) improper trading activities;

(6) Procedures to audit for compliance with, and to redress violations of, customer protection and sales practice requirements including, without limitation, a surveillance program and the existence of broad powers to conduct investigations and to impose sanctions; and

(7) Mechanisms for sharing information between the Exchange and the CNMV and the Commission on an ''as needed'' basis

[2] 52 FR 28980, 28981 and 29002.

[3] Letter dated July 9, 1995 from Jose Massa, Director General and C.E.O., MEFF Renta Variable, to Jane C. Kang, CFTC Division of Trading and Markets.

[4] On August 8, 1994 the Commission's Office of the General Counsel authorized the offer and sale in the United States of the MEFF Renta Variable stock index futures on the IBEX–35. By letter dated December 4, 1996, the Exchange notified the Commission's Office of the General Counsel of certain modifications to the terms and conditions of the IBEX–35 contract, which has been renamed the IBEX–35 Plus (replacing the IBEX–35).

[5] The Part 30 rules apply solely with respect to foreign futures and foreign options, which are defined by reference to the term ''foreign board of trade.'' See note 1 above. For purposes of this Order, the term ''foreign board of trade'' shall mean any board of trade, exchange or market located outside the United States, its territories or possessions, whether incorporated or unincorporated, where foreign futures or foreign options transactions are entered into. Commission rule 1.3(ss), 17 C.F.R. 1.3(ss). Thus, contracts that are traded on a market that has been designated as a contract market pursuant to section 5a of the Commodity Exchange Act (CEA) are not within the scope of this Order.

This order granting exemptive relief does not authorize the offer or sale of any contract beyond the scope of the Part 30 rules or otherwise inconsistent with the CEA. Thus, for example, the grant of rule 30.10 relief does not authorize MEFF Renta Variable members to offer or sell to U.S. customers any options on any individual securities or any options directly on the IBEX–35 Plus Index which are traded on the Exchange. Nor does this relief authorize the offer and sale of any stock index product which has not been the subject of a Commission staff no-action letter.

[6] *See* MEFF Renta Variable, November 26, 1996, and CNMV, February 29, 1996.

including, without limitation, confirmation data, data necessary to trace funds, position data, data on firms' standing to do business and financial condition, and mechanisms for cooperating with the Commission in inquiries, compliance matters, investigations and enforcement proceedings.[7]

This Order does not provide an exemption from any provision of the Act or regulations thereunder not specified herein, for example, without limitation, the antifraud provision in Commission rule 30.9, 17 CFR 30.9, or the disclosure provisions of Commission rules 1.55, 30.6, and 33.7, 17 CFR 1.55, 30.6 and 33.7, including the requirements of rule 1.55(f), 30.6(e), and 33.7(f).[8] Moreover, the relief granted is limited to brokerage activities undertaken on behalf of customers in the United States with respect to transactions on or subject to the rules of MEFF Renta Variable, and which U.S. customers may trade.

The relief does not extend to rules or regulations relating to trading, directly or indirectly, on United States exchanges. For example, such a firm trading in United States markets for its own account would be subject to the Commission's large trader reporting requirements. *See, e.g.,* 17 CFR Part 18. Similarly, if such a firm were carrying a position on a United States exchange on behalf of foreign clients, it would be subject to the reporting requirements applicable to foreign brokers. *See, e.g.,* 17 CFR Parts 17 and 21. The relief herein does not apply to firms that solicit United States customers for transactions on United States markets.

The eligibility of any firm to seek rule 30.10 relief under this exemptive Order is subject to the following conditions:

(1) The regulatory or self-regulatory organization responsible for monitoring the compliance of such firm with the regulatory requirements described in the rule 30.10 petition must represent in writing to the CFTC that:

(a) Each firm for which relief is sought is registered, licensed or authorized, as appropriate, and is otherwise in good standing under the standards in place in Spain; such firm is engaged in business with customers located in Spain as well as in the United States; and, such firm would not be statutorily disqualified from registration under section 8a(2) of the CEA, 7 U.S.C. 12(a)(2);

(b) It will monitor firms to which relief is granted for compliance with the regulatory requirements for which substituted compliance is accepted and will promptly notify the Commission or NFA of any change in status of a firm which would affect its continued eligibility for the exemption granted hereunder, including the termination of its activities in the United States;

(c) All transactions on the Exchange with respect to customers resident in the United States will be made on or subject to the rules of the Exchange and the Commission will receive prompt notice of all material changes to MEFF Renta Variable rules, the SMA and other laws relevant to futures and options (*e.g.,* Royal Decree 1814 and Royal Decree 629);

(d) Customers resident in the United States will be provided no less stringent regulatory protection than Spanish customers under all relevant provisions of Spanish law; and

(e) It will cooperate with the Commission with respect to any inquiries concerning any activity subject to regulation under the Part 30 rules, including sharing the information specified in Appendix A to the Part 30 rules on an ''as needed'' basis in accordance with the agreed information sharing arrangement and will use its best efforts to notify the Commission if it becomes aware of any information which in its judgment affects the financial or operational viability of a Spanish-domiciled firm doing business in the United States under the exemption granted by this Order.

(2) Each firm seeking rule 30.10 relief hereunder must apply in writing whereby it:

(a) Consents to jurisdiction in the United States under the Act and files a valid and binding appointment of an agent in the United States for service of process in accordance with the requirements set forth in Commission rule 30.5, 17 CFR 30.5;

(b) Acknowledges that it can be required by the Exchange to provide the Exchange immediate access to its books and records related to transactions under Part 30 required to be maintained under the applicable laws and Exchange rules in effect in Spain and that the Exchange will cooperate in providing access to such books and records to the Commission in accordance with the agreed upon information sharing arrangement;

(c) Represents that no principal, and no employee who solicits or accepts orders from United States customers, would be disqualified from directly applying to do business in the United States under section 8a(2) of the CEA, 7 USC 12a(2), and consents to notify the Commission promptly of any change in that representation based on a change in control as generally defined in Commission rule 3.32, 17 CFR 3.32;

(d) Consents that all futures or options transactions for customers located in the United States will be undertaken from a location in Spain (except as otherwise permitted by the Commission) solely with respect to transactions on or subject to the rules of MEFF Renta Variable, and which U.S. customers may trade;

(e)(1) If a Clearing Member of the Exchange which carries the accounts of customers located in the United States: agrees to maintain funds equivalent to the aggregate ''secured amount'' (described in Commission rule 1.3(rr), 17 CFR 1.3(rr)), for all United States customers in a separate account as set forth in Commission rule 30.7, 17 CFR 30.7, and to treat those funds in the manner described by that rule;

(e)(2) If a Non-Clearing Member of the Exchange: agrees to comply with relevant Spanish laws and Exchange rules prohibiting them from accepting or otherwise handling customer funds;

(f) Agrees to provide customers with account statements on at least a monthly basis;

(g) Discloses the identity of each subsidiary or affiliate domiciled in the United States with a related business (*e.g.,* banks and broker/dealer affiliates) and provides a brief description of such subsidiary's or affiliate's principal business in the United States;

(h)(1) Consents to participate in any NFA arbitration program which offers a procedure for resolving customer disputes on the papers where such disputes involve representations or activities with respect to transactions under Part 30, and consents to notify customers resident in the United States of the availability of such a program: *Provided, however,* that the firm may require its customers resident in the United States to execute the consent attached hereto as Exhibit A concerning the exhaustion of certain mediation procedures made available by the Exchange prior to bringing an NFA arbitration proceeding; and *Provided further* that the firm must undertake to provide the customer with information concerning how to commence such procedures pursuant to the consent attached hereto as Exhibit A;

(h)(2) *Provided, however,* that until the Exchange adopts a procedure for an ''on the papers'' hearing applicable to all Exchange arbitrations, consents to notify such customers that if they elect Exchange arbitration, they or their agent could be required to appear personally at a hearing, and if the customer elects NFA arbitration, consents to participate in such proceeding even in circumstances where the dispute arises primarily out of delivery, clearing, settlement or floor practices;

(i) Undertakes to comply with the applicable provisions of Spanish law and Exchange and CNMV rules which form the basis upon which this exemption from certain provisions of the Act is granted; and

(j) Agrees to provide to any U.S. customers either the generic risk disclosure statement approved by the Commission under rule 1.55(c) or, if a generic statement is not used,[9] in the alternative the risk disclosure

[7] The Exchange and its regulator, CNMV, have provided assurances to the Commission, subject to certain agreed upon principles, regarding the availability of information relevant to Part 30 on an ''as needed'' basis. *See* MEFF Renta Variable, November 26, 1996; CNMV, February 29, 1996, and letter May 19, 1994 from Eudald Canadell, CNMV, to Andrea M. Corcoran, CFTC (confirming that information may be shared between the CFTC and the CNMV pursuant to the Memorandum of Understanding on Mutual Assistance and Exchange of Information of October 1992).

[8] These rules essentially provide that delivery of a mandated risk disclosure statement does not eliminate any obligation under the Act to disclose all material information to existing or prospective customers even if the information is not specifically required by the applicable risk disclosure rule.

[9] All firms operating under rule 30.10 relief may elect to provide the generic risk disclosure statement approved by the CFTC in 1994, in lieu of separately providing the disclosure statements required by CFTC rules 1.55, 33.7, 190.10(c) and the special disclosures required for margining of option premiums. *See* 59 FR 34376 (July 5, 1994).

statements mandated by Commission rules 30.6(a) [*i.e.,* 1.55(a)] and 33.7 (*see* rule 30.6(d)), Commission rule 190.10 (c)(2) and applicable Commission orders, as appropriate.[10]

Upon filing of the notice required under paragraph (1)(b) as to any such firm, the rule 30.10 relief granted by this Order may be suspended immediately as to that firm. That suspension will remain in effect pending further notice by the Commission, or the Commission's designee, to the firm and the Exchange and/or any applicable regulatory or self-regulatory organization.

Any material changes or omissions in the facts and circumstances pursuant to which this Order is granted might require the Commission to reconsider its finding that the standards for issuance of an order under Commission rule 30.10, including Appendix A of rule 30.10, have generally been satisfied.

Further, if experience demonstrates that the continued effectiveness of this Order in general, or with respect to a particular firm or product, would be contrary to public policy or the public interest, or that the systems in place for the exchange of information or other circumstances do not warrant continuation of the exemptive relief granted herein, the Commission may condition, modify, suspend, terminate, withhold as to a specific firm or product, or otherwise restrict the exemptive relief granted in this Order, as appropriate, on its own motion. If necessary, provisions will be made for servicing existing client positions.

List of Subjects in 17 CFR Part 30

Commodity futures, Commodity options, Foreign futures and options.

Accordingly, 17 CFR part 30 is amended as set forth below:

PART 30—FOREIGN FUTURES AND FOREIGN OPTIONS TRANSACTIONS

1. The authority citation for part 30 continues to read as follows:

Authority: Secs. 2(a)(1)(A), 4, 4c, and 8a of the Commodity Exchange Act, 7 U.S.C. 2, 6, 6c, and 12a.

2. Appendix C to part 30 is amended by adding the following entry to read as follows:

Appendix C—Foreign Petitioners Granted Relief From the Application of Certain of the Part 30 Rules Pursuant to § 30.10

* * * * *

Firms designated by the MEFF Sociedad Rectora de Productos Financieros Derivados de Renta Variable (''MEFF Renta Variable.'')

FR date and citation: _____, 1997, _____FR_____.

Issued in Washington, D.C., on April 1, 1997.

Jean A. Webb,

Secretary to the Commission.

Exhibit A—Form of Consent to Undertake Mediation Prior to NFA Arbitration

In the event that a dispute arises between you [name of customer resident in the United States] and [name of MEFF Renta Variable member firm] with respect to transactions subject to Part 30 of the Commodity Futures Trading Commission's rules, various forums may be available for resolving the dispute, including courts of competent jurisdiction in the United States and Spain and arbitration programs made available both in the United States and Spain.

In the event you wish to initiate an arbitration proceeding against this firm to resolve such dispute under the applicable rules of the National Futures Association (''NFA'') in the United States, you hereby consent that you will first commence mediation in accordance with such procedures as may be made available by the MEFF Sociedad Rectora de Productos Financieros Derivados de Renta Variable (''MEFF Renta Variable'' or ''Exchange''), information on which is provided to you herewith. The outcome of such MEFF Renta Variable mediation is nonbinding. You may subsequently accept this resolution, or you may proceed either to binding arbitration under the rules of the MEFF Renta Variable or to binding arbitration in the United States under the rules of NFA. If you accept the mediated resolution or elect to proceed to arbitration, or to any other form of binding resolution under the rules of the Exchange, you will be precluded from subsequently initiating an arbitration proceeding at NFA.

You may initiate an NFA arbitration proceeding upon receipt of documentation from MEFF Renta Variable:

(1) Evidencing completion of the mediation process and reminding you of your right of access to NFA's arbitration proceeding; or

(2) Representing that more than nine months have elapsed since you commenced the mediation process and that such process is not yet complete and reminding you of your right of access to NFA's arbitration proceeding.

The documentation referred to above must be presented to NFA at the time you initiate the NFA arbitration proceeding. NFA will exercise its discretion not to accept your demand for arbitration absent such documentation.

By signing this consent you are not waiving any other right to any other legal remedies available under the law.

_____

Customer

_____

Date

[FR Doc. 97–8872 Filed 4–7–97; 8:45 am]

BILLING CODE 6351–01–P

[10] *See, e.g.,* CFTC Advisory No. 90–1 [1987–1990 Transfer Binder] Comm. Fut. L. Rep. (CCH) ¶ 24,597 (disclosure statement related to the deferred payment of option premiums).

SECURITIES AND EXCHANGE COMMISSION

17 CFR Part 232

[Release Nos. 33–7411; 34–38465; 35–26699; 39–2351; IC–22595]

RIN 3235–AG96

Adoption of Updated EDGAR Filer Manual; Correction and Further Delay of Implementation

AGENCY: Securities and Exchange Commission.

ACTION: Final rule; correction and further delay of implementation.

SUMMARY: The Commission is postponing the implementation of an updated edition of the EDGAR Filer Manual which was published in the **Federal Register** on February 27, 1997 (62 FR 8877) and March 24, 1997 (62 FR 13820) in order to resolve technical issues, resulting from a power outage, that delayed system implementation from March 24, 1997 to April 14, 1997 and is correcting a typographical error in an instruction to the amendatory language for § 232.301.

DATES: The correction to § 232.301 is effective March 10, 1997. The implementation of the new edition of the EDGAR Filer Manual is delayed until April 14, 1997.

FOR FURTHER INFORMATION CONTACT: In the Office of Information Technology, David T. Copenhafer at (202) 942–8800; for questions concerning investment company filings, Ruth Armfield Sanders, Senior Counsel, Division of Investment Management, at (202) 942–0591; and for questions with respect to documents subject to review by the Division of Corporation Finance, Margaret R. Black at (202) 942–2940.

SUPPLEMENTARY INFORMATION: On February 21, 1997, the Commission announced the adoption of an updated EDGAR Filer Manual (''Filer Manual''), which sets forth the technical formatting requirements governing the preparation and submission of electronic filings through the Electronic Data Gathering, Analysis, and Retrieval (''EDGAR'') system.[1] Compliance with the provisions of the Filer Manual is required in order to assure the timely

[1] The Filer Manual originally was adopted on April 1, 1993, and became effective on April 26, 1993. Release No. 33–6986 (April 1, 1993) [58 FR 18638]. The most recent update to the Filer Manual was adopted in Release No. 33–7394 (February 21, 1997) [62 FR 8877], and became effective on March 10, 1997. On March 19, 1997, the Commission issued a release correcting and delaying the implementation of the EDGAR Filer Manual. *See* Release No. 33–7405 (March 19, 1997) 62 FR 13820 (March 24, 1997).

acceptance and processing of filings made in electronic format. Filers should consult the Filer Manual in conjunction with the Commission's rules governing mandated electronic filing when preparing documents for electronic submission.[2]

A power outage that occurred at 4:30 a.m. on March 21, 1997 prevented system implementation on March 24, 1997. The Commission, therefore, is postponing the implementation of the Filer Manual from March 24, 1997 to April 14, 1997.

An incorrect page reference in the March 24th issue is being corrected for § 232.301.

Need for Correction

As published, the correction to the final regulations contains an error which may prove to be misleading and is in need of clarification.

Correction of Publication

Accordingly, the publication of March 24, 1997 of the final regulations, which were the subject of FR Doc. No. 97–7340, is corrected as follows:

§ 232.301 [Corrected]

On page 13821, second column, in the amendatory instruction to § 232.301, first line, page ''8876'' is corrected to read ''8878''.

Dated: April 2, 1997.

Margaret H. McFarland,

Deputy Secretary.

[FR Doc. 97–8874 Filed 4–7–97; 8:45 am]

BILLING CODE 8010–01–M

[2] *See* Release Nos. 33–6977 (February 23, 1993) [58 FR 14628], IC–19284 (February 23, 1993) [58 FR 14848], 35–25746 (February 23, 1993) [58 FR 14999], and 33–6980 (February 23, 1993) [58 FR 15009] for a comprehensive treatment of the rules adopted by the Commission governing mandated electronic filing. *See also* Release No. 33–7122 (December 19, 1994) [59 FR 67752], in which the Commission made the EDGAR rules final and applicable to all domestic registrants and adopted minor amendments to the EDGAR rules; Release No. 33–7394, in which the Commission adopted the most recent update to the Filer Manual; and Release No. 33–7369 (December 5, 1996) [61 FR 65440], in which the Commission proposed additional minor technical amendments to the EDGAR rules.

DEPARTMENT OF DEFENSE

Office of the Secretary

32 CFR Part 216

[DoD Directive 1322.13]

RIN 0790–AG42

Military Recruiting and Reserve Officer Training Corps Program Access to Institutions of Higher Education

AGENCY: Office of the Secretary, Department of Defense.

ACTION: Interim rule.

SUMMARY: The Department of Defense adopts this interim rule to implement the National Defense Authorization Act of 1995, National Defense Authorization Act for Fiscal Year 1996, and the Omnibus Consolidated Appropriations Act, 1997 which state that no funds available under appropriations acts for any fiscal year for the Departments of Defense, Transportation (with respect to recruiting), Labor, Health and Human Services, Education, and Related Agencies may be provided by contract or grant (including a grant of funds to be available for student aid) to a covered school that has a policy or practice (regardless of when implemented) that either prohibits, or in effect prevents, the Secretary of Defense from obtaining, for military recruiting purposes, entry to campuses, access to students on campuses, access to directory information on students or that has an anti-ROTC policy. The rule implements the law. The Department invites the public to comment on this interim rule. It will consider these comments in issuing the final rule.

DATES: This interim rule is effective March 29, 1997. Comments must be received by July 7, 1997.

ADDRESSES: Forward comments to the Director for Accession Policy, Office of the Assistant Secretary of Defense for Force Management Policy, 4000 Defense Pentagon, Washington, DC 20301–4000.

FOR FURTHER INFORMATION CONTACT: William J. Carr, (703) 697–8444.

SUPPLEMENTARY INFORMATION: The Secretary is interested in establishing sound procedures to implement current statutes, while keeping the regulatory burden to the minimum necessary to carry out the congressional intent.

To that end, the Department developed this rule in consultation with other Federal agencies, including the Departments of Education, Labor, Transportation, and Health and Human Services. Informal discussions were held with a variety of education associations, and advocates of institutions of higher education. This rule incorporates many of the comments and suggestions offered by those organizations and entities. Agencies affected by this rule will continue to coordinate as they implement its provisions.

The part defines the criteria for determining whether an institution of higher education has a policy or practice prohibiting or preventing the Secretary of Defense from maintaining, establishing, or efficiently operating a Senior ROTC unit; or has a policy of denying military recruiting personnel entry to campuses, access to students on campuses, or access to directory information on students. Current statutes establish that institutions of higher education having such policies or practices are ineligible for certain Federal funding. The statutes are the National Defense Authorization Act of 1995, 10 U.S.C. 983, and the Omnibus Consolidated Appropriations Act, 1997.

The determination of the ability to 'efficiently' operate an ROTC unit generally refers to an expectation that the ROTC Department would be treated on a par with other academic departments; as such, it would not be singled out for actions that would unreasonably impede access to students (and vice versa) or unreasonably restrict its operations.

The part also defines the procedures that would be followed in evaluating recommendations for such a determination. When a component of the Department of Defense (DoD component) believes that policies or practices of an institution of higher education might require such a determination, that component is required to confirm the institution's policy in consultation with the institution. If that exchange suggests that the policy or practice would trigger a denial of funding, as required by law, the supporting facts would be forwarded through Department of Defense channels to the decision authority, who is the Assistant Secretary of Defense for Force Management Policy (ASD(FMP)).

The Department has provided definitions to which it especially invites attention, since those definitions are intended to inform the reader of the specific meaning of significant words used in this rule.

More specifically, in carrying out their customary activities, DoD components must identify any institutions of higher education that, by policy or practice, deny military recruiting personnel entry to the campus(es) of those schools, access to their students, or access to student

directory information. When repeated requests to schedule recruiting visits or to obtain directory information are unsuccessful, the component concerned must seek written confirmation of the school's present policy from the head of the school through a letter of inquiry. If written confirmation cannot be obtained, oral policy statements or attempts to obtain such statements from an appropriate official of the school shall be documented. A copy of the documentation shall be provided to the covered school, which shall be informed of its opportunity to forward clarifying comments to accompany the submission to the ASD(FMP), and shall be provided 30 days to offer such clarifying comments.

Similarly, in carrying out their customary activities, DoD components must identify any institutions of higher education that, by policy or practice, deny establishment, maintenance, or efficient operation of a unit of the Senior ROTC; or deny students permission to participate, or effectively prevent students from participating in a unit of the Senior ROTC at another institution of higher education. The DoD component concerned must seek written confirmation of the school's policy from the head of the school through a letter of inquiry. If written confirmation cannot be obtained, oral policy statements or attempts to obtain such statements from an appropriate official of the school shall be documented. A copy of the documentation shall be provided to the covered school, which shall be informed of its opportunity to forward clarifying comments to accompany the submission to the ASD(FMP), and shall be provided 30 days to offer such clarifying comments.

The recommendation of the DoD component then must be reviewed by the Secretary of the Military Department concerned, who shall evaluate responses to the letter of inquiry, and other such information obtained in accordance with this part, and submit to the ASD(FMP) the names and addresses of covered schools that are believed to be in violation of current law. Full documentation must be furnished to the ASD(FMP) for each such covered school, including the school's formal response to the letter of inquiry, documentation of any oral response, or evidence showing that attempts were made to obtain either written confirmation or an oral statement of the school's policies.

Following any determination by the ASD(FMP) that policies or practices of an institution of higher education require a determination of ineligibility for certain Federal funding, as required by law, the ASD(FMP) would:

- Disseminate to Federal entities affected by the decision, including the DoD components and the General Services Administration (GSA), the names of the affected institutions. The ASD(FMP) also would notify the Committee on Armed Services of the Senate and the Committee on National Security of the House of Representatives.
- Publish in the **Federal Register** each such determination, and publish in the **Federal Register** once every six months a list of all institutions currently determined to be ineligible for contracts and grants by reason of such determinations.
- Inform the affected institution that its funding eligibility may be restored if the school provides sufficient new information that the basis for the determination no longer exists.

This rule contains procedures under which funding can be restored. Not later than 45 days after receipt of a school's request to restore funding eligibility, the ASD(FMP) must determine whether the funding status of the covered school should be changed, and notify the applicable school of such a determination. Concurrently, entities of the Federal governments affected by the decision, including the DoD components and the GSA, would be notified of the change in funding status.

Other Matters

In the event of any determination of ineligibility by the ASD (FMP), the Federal agencies affected by the decision will determine what funds provided by grant or contract to the covered school are affected and take appropriate action. As a result of this division of responsibility and also due to the large number of Federal agencies affected, this rule does not detail what funds are affected by any determination of ineligibility.

The Department of Education intends to communicate separately regarding the impact on programs of federal student financial assistance under Title IV of the Higher Education Act of 1965, as amended (HEA). However, due to present confusion over the language in 110 Stat. 3009 concerning ''(including a grant of funds to be available for student aid)'', the Secretary of Education has requested that DoD include in this preamble the following clarification: The Secretary of Education has determined that funds under the Federal Pell Grant Program (Title IV, Part A, Subpart 1), the Federal Family Education Loan Program (Title IV, Part B), and the Federal Direct Student Loan Program (Title IV, Part D) are not affected because funds under these programs are not provided by grant or contract to a covered school, but are funds provided to the student recipients. The impact of 110 Stat. 3009 on funds provided under the Federal Supplemental Educational Opportunity Grant Program (Title IV, Part A, Subpart 3), the Federal Work-Study Program (Title IV, Part C), and the Federal Perkins Loan Program (Title IV, Part E) (collectively the Campus-Based Programs) is still under review. In any event, no funds under the Campus-Based Programs would be affected prior to July 1, 1997. Campus-Based awards prior to July 1, 1997 are funded from the FY 1996 appropriation; 110 Stat. 3009 affects only FY 1997 and later year appropriations. In light of the July 1, 1997 date for release of FY 1997 Campus-Based funds, the Secretary of Education will separately communicate as soon as possible on whether the Campus-based programs are affected.

Justification for an Interim Rule

The Omnibus Consolidated Appropriations Act, 1997 (Pub. L. 104–208, section 514) requires that the statute become effective not later than 180 days following its enactment. The statute also calls for promulgation of rules consistent with this effective date. Because final rules are necessary to implement the statute, it is impracticable to provide for public notice and comment on a proposed rule prior to this statutory deadline. Accordingly, the Department issues this interim rule and invites public comment. Public comments must be received by July 7, 1997. The Department will carefully consider these comments in issuing a final rule.

In light of the March 29, 1997 statutory effective date, the 30-day delay of the effective date after publication of a final rule under the Administrative Procedures Act is hereby waived.

Executive Order 12866, ''Regulatory Planning and Review''

It has been determined that this interim rule is a significant regulatory action for OMB review.

Public Law 96–354, ''Regulatory Flexibility Act'' [5 U.S.C. 601]

This interim rule will not have a significant adverse impact on a substantial number of small entities.

Public Law 96–511, ''Paperwork Reduction Act'' [44 U.S.C. Chapter 35]

This interim rule will not impose any additional reporting or record keeping

requirements under the Paperwork Reduction Act.

List of Subjects in 32 CFR Part 216

Armed forces; Colleges and universities.

Accordingly, 32 CFR part 216 is revised to read as follows:

PART 216—MILITARY RECRUITING AND RESERVE OFFICER TRAINING CORPS PROGRAM ACCESS TO INSTITUTIONS OF HIGHER EDUCATION

Sec.
216.1 Purpose.
216.2 Applicability.
216.3 Definitions.
216.4 Policy.
216.5 Responsibilities.
216.6 Information requirements.
Appendix A of part 216—ROTC Sample Letter of Inquiry
Appendix B of part 216—Military Recruiting Sample Letter of Inquiry

Authority: 10 U.S.C. 983.

§ 216.1 Purpose.

This part:

(a) Implements the National Defense Authorization Act of 1995 (108 Stat. 2663),

(b) Implements 10 U.S.C. 983, and

(c) Implements the Omnibus Consolidated Appropriations Act, 1997 (110 Stat. 3009).

(d) Updates policy and responsibilities relating to the management of covered schools that have a policy of either denying, or effectively preventing military recruiting personnel entry to their campuses, access to their students, or access to student directory information.

(e) Updates policy and responsibilities relating to the management of covered schools that have an anti-ROTC policy.

§ 216.2 Applicability.

This part applies to the Office of the Secretary of Defense, the Military Departments, the Chairman of the Joint Chiefs of Staff, the Combatant Commands, the Defense Agencies, and the DoD Field Activities (hereafter referred to collectively as ''the DoD Components''). The policies herein also affect the Departments of Transportation, Labor, Health and Human Services, Education, and Related Agencies. The term ''Military Services,'' as used herein, refers to the Army, the Navy, the Marine Corps, the Air Force, and the Coast Guard. The term ''Related Agencies,'' as used herein, refers to the Armed Forces Retirement Home, the Corporation for National and Community Service, the Corporation for Public Broadcasting, the Federal Mediation and Conciliation Service, the Federal Mine Safety and Health Review Commission, the National Commission on Libraries and Information Science, the National Council on Disability, the National Education Goals Panel, the National Labor Relations Board, the National Mediation Board, the Occupational Safety and Health Review Commission, the Physician Payment Review Commission, the Prospective Payment Assessment Commission, the Social Security Administration, the Railroad Retirement Board and the United States Institute of Peace.

§ 216.3 Definitions.

Anti-ROTC policy. A policy or practice whereby a covered school prohibits or in effect prevents the Secretary of Defense from maintaining, establishing, or efficiently operating a unit of the Senior ROTC at the covered school; or prohibits or in effect prevents a student at the covered school from enrolling in a Senior ROTC unit at another institution of higher education.

Covered school. An institution of higher education, or a subelement of an institution of higher education, subject to the following clarifications:

(1) In the event of a determination (§ 216.5) affecting only a subelement of a parent institution (see § 216.3(d)), the limitations on the use of funds (§ 216.4 (a) and (b)) shall apply only to the subelement and not to the parent institution as a whole.

(2) The limitations on the use of funds (§ 216.4 (a) and (b)) shall not apply to any individual institution of higher education that is part of a single university system that does not prevent entry to campus, access to students, or access to student information by military recruiters, or have an anti-ROTC policy, even though another campus of the same system is affected by a determination under § 216.5(a).

Directory information on students. The student's name, address, telephone listing, date and place of birth, level of education, academic major, degrees received, and the educational institution in which the student most recently was enrolled.

Institution of higher education. A domestic college, university, or subelement thereof providing postsecondary school courses of study, including foreign campuses of such domestic institutions. The term includes junior colleges, community colleges, and institutions providing courses leading to undergraduate and post-graduate degrees. The term does not include entities that operate exclusively outside the United States, its territories, and possessions. A subelement of an institution of higher education is a discrete (although not necessarily autonomous) organizational entity that may establish policies or practices affecting military recruiting and related actions (e.g., an undergraduate school, a law school, a medical school, or other graduate schools). For example, the School of Law of XYZ University is a subelement of its parent institution (XYZ University).

Student. An individual who is 17 years of age or older and is enrolled at a covered school.

§ 216.4 Policy.

It is policy that:

(a) Under 108 Stat. 2663 and 110 Stat. 3009, no funds available under appropriations acts for any fiscal year for the Departments of Defense, Transportation, Labor, Health and Human Services, Education, and Related Agencies may be provided by contract or by grant (including a grant of funds to be available for student aid) to a covered school if the Secretary of Defense determines that the covered school has a policy or practice (regardless of when implemented) that either prohibits or in effect prevents the Secretary of Defense from obtaining, for military recruiting purposes, entry to campuses, access to students on campuses, or access to directory information on students.

(b) Under 110 Stat. 3009, no funds available under appropriations acts for any fiscal year for the Departments of Labor, Health and Human Services, Education, and Related Agencies may be provided by contract or grant (including a grant of funds to be available for student aid) to a covered school that has an anti-ROTC policy or practice (regardless of when implemented). Additionally, under 10 U.S.C. 983, no funds appropriated or otherwise available to the Department of Defense may be made obligated by contract or by grant to a covered school that has such a policy or practice.

(c) The limitations established in paragraph (a) of this section, shall not apply to a covered school if the Secretary of Defense determines that the covered school:

(1) Has ceased the policies or practices defined in paragraph (a) of this section;

(2) Has a long-standing policy of pacifism based on historical religious affiliation;

(3) Excludes all employers from recruiting on the premises of the covered school;

(4) When not providing any directory information on students, certifies that such information is not collected by the covered school;

(5) When not providing directory information for specific students, certifies that each student concerned has formally requested the covered school to withhold this information from third parties;

(6) Permits employers to recruit on the premises of the covered school only in response to an expression of student interest, and the covered school;

(i) Provides the Military Services with the same opportunities to inform the students of military recruiting activities as are available to other employers; or

(ii) Certifies that too few students have expressed an interest to warrant accommodating military recruiters, applying the same criteria that are applicable to other employers; or

(7) Is prohibited by the law of any State, or by the order of any State court, from allowing Federal military recruiting on campus (this exemption is terminated effective March 29, 1998, in accordance with 110 Stat. 3009). However, this exemption does not apply to funds available to the Department of Defense, in accordance with 108 Stat. 2663.

(d) The limitations established in paragraph (b) of this section, shall not apply to a covered school if the Secretary of Defense determines that the covered school:

(1) Has ceased the policies or practices defined in paragraph (b) of this section;

(2) Has a long-standing policy of pacifism based on historical religious affiliation;

(3) Is prohibited by the law of any State, or by the order of any State court, from allowing Senior Reserve Officer Training Corps activities on campus (this exemption is terminated effective March 29, 1998, in accordance with 110 Stat. 3009). However, this exemption does not apply to funds available to the Department of Defense, in accordance with 10 U.S.C. section 983.

(e) an evaluation to determine whether a covered school maintains a policy or practice covered by paragraph (a) of this section shall be undertaken when:

(1) Military recruiting personnel cannot gain entry to campus, cannot obtain access to students on campus, or are denied access to directory information on students (however, military recruiting personnel shall accommodate a covered school's reasonable preferences as to times and places for scheduling on-campus recruiting); or

(2) The covered school is unwilling to declare in writing, in response to an inquiry from a DoD Component, that the covered school does not have a policy of denying, and that it does not effectively prevent, the Secretary of Defense from obtaining for military recruiting purposes entry to campuses, access to students on campuses, or access to student directory information.

(f) An evaluation to determine whether a covered school has an anti-ROTC policy covered by paragraph (b) of this section shall be undertaken when:

(1) A Secretary of a Military Department or designee cannot obtain permission to establish, maintain, or efficiently operate a unit of the Senior ROTC; or

(2) Absent a Senior ROTC unit at the covered school, students cannot obtain permission from a covered school to participate, or are effectively prevented from participating, in a unit of the Senior ROTC at another institution of higher education.

§ 216.5 Responsibilities.

(a) The Assistant Secretary of Defense for Force Management Policy, under the Under Secretary of Defense for Personnel and Readiness, shall:

(1) Not later than 45 days after receipt of the information defined in paragraph (d)(3) of this section:

(i) Make a final determination under 108 Stat. 2663, 10 U.S.C., section 983; and 110 Stat. 3009 and/or this part, and notify any affected school of that determination along with the basis, and that it is therefore ineligible to receive prescribed funds as a result of that determination.

(ii) Disseminate to Federal agencies affected by 110 Stat. 3009, to the DoD Components, and to the General Services Administration (GSA) the names of covered schools identified under paragraph (a)(1)(i) of this section, and the basis of the determination.

(iii) Disseminate the names of covered schools identified under paragraph (a)(1)(i) of this section, to the Secretary of Education and to the Committee on Armed Services of the Senate and the Committee on National Security of the House of Representatives.

(iv) Publish in the **Federal Register** each determination of the Secretary of Defense that a covered school is ineligible for contracts and grants made under 108 Stat. 2663, 10 U.S.C., section 983, and 110 Stat. 3009 and/or this part.

(v) Publish in the **Federal Register** once every six months a list of covered schools that are ineligible for contracts and grants by reason of a determination of the Secretary of Defense under 108 Stat. 2663, 10 U.S.C., section 983, and 110 Stat. 3009 and/or this part.

(vi) Inform the applicable school identified under paragraph (a)(1)(i) of this section, that its funding eligibility may be restored if the school provides sufficient new information that the basis for the determination under paragraph (a)(1)(i) of this section no longer exists.

(2) Not later than 45 days after receipt of a covered school's request to restore its eligibility:

(i) Determine whether the funding status of the covered school should be changed, and notify the applicable school of that determination.

(ii) Notify the parties reflected in paragraphs (a)(1) (ii) and (iii) of this section when a determination of funding ineligibility (paragraph (a)(1)(i) of this section) has been rescinded.

(b) The Secretaries of the Military Departments shall:

(1) Identify covered schools that, by policy or practice, deny military recruiting personnel entry to the campus(es) of those schools, access to their students, or access to student directory information. When repeated requests to schedule recruiting visits or to obtain directory information are unsuccessful, the Military Service concerned shall seek written confirmation of the school's present policy from the head of the school through a letter of inquiry. A letter similar to that shown in Appendix A of this part shall be used, but it should be tailored to the situation presented. If written confirmation cannot be obtained, oral policy statements or attempts to obtain such statements from an appropriate official of the school shall be documented. A copy of the documentation shall be provided to the covered school, which shall be informed of its opportunity to forward clarifying comments to accompany the submission to the ASD(FMP), and shall be provided 30 days to offer such clarifying comments.

(2) Identify covered schools that, by policy or practice, deny establishment, maintenance, or efficient operation of a unit of the Senior ROTC; or deny students permission to participate, or effectively prevent students from participating in a unit of the Senior ROTC at another institution of higher education. The Military Service concerned shall seek written confirmation of the school's policy from the head of the school through a letter of inquiry. A letter similar to that shown in appendix B of this part shall be used, but it should be tailored to the situation presented. If written confirmation cannot be obtained, oral policy statements or attempts to obtain such

statements from an appropriate official of the school shall be documented. A copy of the documentation shall be provided to the covered school, which shall be informed of its opportunity to forward clarifying comments to accompany the submission to the ASD(FMP), and shall be provided 30 days to offer such clarifying comments.

(3) Evaluate responses to the letter of inquiry, and other such evidence obtained in accordance with this part, and submit to the ASD(FMP) the names and addresses of covered schools that are believed to be in violation of policies established in § 216.4. Full documentation shall be furnished to the ASD(FMP) for each such covered school, including the school's formal response to the letter of inquiry, documentation of any oral response, or evidence showing that attempts were made to obtain either written confirmation or an oral statement of the school's policies.

(c) The Heads of the DoD Components shall:

(1) Provide the ASD(FMP) with the names and addresses of covered schools identified as a result of evaluation(s) required under §§ 216.4 (e) and (f).

(2) Take immediate action to deny obligations of DoD Funds to covered schools identified under paragraph (a)(1)(i) of this section, and to restore eligibility of covered schools identified under paragraph (a)(2) of this section.

§ 216.6 Information requirements.

The information requirements identified at §§ 216.5 (b) and (c)(1) have been assigned Report Control Symbols DD–P&R (SA) 1386 and DD–P&R (SA) 1640, respectively, in accordance with DoD 8910.1–M.[1]

Appendix A of Part 216—ROTC Sample Letter of Inquiry

(Tailor letter to situation presented).

Dr. Jane Smith,
President, ABC College, Anywhere, USA 12345–9876.

Dear Dr. Smith: I understand that ABC College has [refused a request from a Military Department to establish a Senior ROTC unit at your institution] [refused to continue existing ROTC programs at your institution] [prevented students from participation at a Senior ROTC program at another institution] by a policy or practice of the College. Current law [1] prohibits funds by grant or contract (including a grant of funds to be available for student aid) from appropriations of the Departments of Defense, Labor, Health and Human Services, Education, and Related Agencies to schools that have a policy or practice prohibiting or preventing the Secretary of Defense from maintaining, establishing, or efficiently operating a Senior ROTC unit. Those statutes also bar agency funds for schools that prohibit or prevent a student from enrolling in an ROTC unit at another institution of higher education. Department of Defense Directive 1322.13 implements [2] those statutes.

This letter provides you an opportunity to clarify your institution's policy regarding ROTC access on the campus of ABC College. In that regard, I request, within the next 30 days, a written statement of the institution with respect to [define the problem area(s)].

Based on this information, Department of Defense officials will make a determination as to your institution's eligibility to receive funds by grant or contract. That decision will affect eligibility for funding from appropriations of the Departments of Defense, Labor, Health and Human Services, Education, and Related Agencies. Should it be determined that ABC College is in violation of the aforementioned statutes, such funding would be stopped, and the school would be ineligible to receive such funds in the future.

I regret that this action may have to be taken. Successful officer procurement requires that the Department of Defense maintain a strong ROTC commissioning program. I hope it will be possible to [define the correction to the aforementioned problem area(s)]. I am available to answer any questions.

Sincerely,

Appendix B of Part 216—Military Recruiting Sample Letter of Inquiry

(Tailor letter to situation presented).

Dr. John Doe,
President, ABC College, Anywhere, USA 12345–9876.

Dear Dr. Doe: I understand that military recruiting personnel [are unable to recruit on the campus of ABC College] [have been refused directory information on ABC College students for military recruiting] by a policy or practice of the College. Current law [1] prohibits funds by grant or contract (including a grant of funds to be available for student aid) from appropriations of the Departments of Defense, Transportation, Labor, Health and Human Services, Education, and Related Agencies to schools that have a policy of denying military recruiting personnel entry to campuses, access to students on campuses, or access to directory information on students. Department of Defense Directive 1322.13 implements [2] those statutes.

This letter provides you an opportunity to clarify your institution's policy regarding military recruiting on the campus of ABC College. In that regard, I request, within the next 30 days, a written policy statement of the institution with respect to access to campus and students, and to student directory information [3] by military recruiting personnel. Your response should highlight any difference between access for military recruiters and access for recruiting by other potential employers.

Based on this information, Department of Defense officials will make a determination as to your institution's eligibility to receive funds by grant or contract. That decision will affect eligibility for funding from appropriations of the Departments of Defense, Transportation, Labor, Health and Human Services, Education, and Related Agencies. Should it be determined that ABC College is in violation of the aforementioned statutes, such funding would be stopped, and the school would be ineligible to receive such funds in the future.

I regret that this action may have to be taken. Successful recruiting requires that Department of Defense recruiters have reasonable access to students on the campuses of colleges and universities, and at the same time have effective relationships with the officials and student bodies of those institutions. I hope it will be possible to [define the correction to the aforementioned problem area(s)]. I am available to answer any questions.

Sincerely,

Dated: March 28, 1997.

L.M. Bynum,

Alternate OSD Federal Register Liaison Officer, Department of Defense.

[FR Doc. 97–8610 Filed 4–7–97; 8:45 am]

BILLING CODE 5000–04–M

[1] Copies may be obtained, at cost, from the National Technical Information Service, 5285 Port Royal Road, Springfield, VA 22161.

[1] 10 U.S.C. 983 and 110 Stat. 3009.

[2] DoD Directive 1322.13, ''Military Recruiting and Reserve Officers Training Corps Program Access to Institutions of Higher Education'' (available on the worldwide web at http://www.dtic.dla.mil/defenselink/).

[1] 108 Stat. 2663 and 110 Stat. 3009

[2] DoD Directive 1322.13, ''Military Recruiting and Reserve Officers Training Corps Program Access to Institutions of Higher Education'' (available on the worldwide web at http://www.dtic.dla.mil/defenselink/)

[3] Directory information refers to a student's name, address, telephone listing, date and place of birth, level of education, academic major, degrees received, and the educational institution in which the student most recently was enrolled.

DEPARTMENT OF TRANSPORTATION

Coast Guard

33 CFR Parts 5, 26, 27, 95, 100,110, 130, 136, 138, 140, 151, 153, 177

46 CFR Part 2

[CGD 96–052]

RIN 2105–AC63

Civil Money Penalties Inflation Adjustments

AGENCY: Coast Guard, DOT.

ACTION: Final rule.

SUMMARY: In accordance with the Federal Civil Monetary Penalty Inflation Adjustment Act of 1990, as amended by the Debt Collection Improvement Act of 1996, this final rule incorporates inflation adjustments for civil money penalties.

DATES: This rule is effective on May 7, 1997.

ADDRESSES: Unless otherwise indicated, documents referred to in this preamble are available for inspection or copying at the office of the Executive Secretary, Marine Safety Council (G–LRA/3406), U.S. Coast Guard Headquarters, 2100 Second Street SW., room 3406, Washington, DC 20593–0001 between 9:30 a.m. and 2 p.m., Monday through Friday, except Federal holidays. The telephone number is (202) 267–1477.

FOR FURTHER INFORMATION CONTACT: Mr. Greg Parks, Office of Regulations and Administrative Law, at (202) 267–2830.

SUPPLEMENTARY INFORMATION:

The Debt Collection Improvement Act of 1996

In an effort to maintain the remedial impact of civil money penalties (CMPs) and promote compliance with the law, Congress amended the Federal Civil Monetary Penalty Inflation Adjustment Act of 1990 (Pub. L. 101–410) with the Debt Collection Improvement Act of 1996 (DCIA) (Pub. L. 104–134). The DCIA requires Federal agencies to adjust certain CMPs to account for inflation. As amended, the law requires each agency to make an initial inflationary adjustment for each applicable CMP, and to make further adjustments at least once every 4 years thereafter for these penalty amounts.

The Debt Collection Improvement Act of 1996 further stipulates that any resulting increase in a CMP due to the calculated inflation adjustment (i) should apply only to a violation that occurs after October 23, 1996—the Act's effective date—and (ii) should not exceed 10 percent of the penalty indicated. CMPs that fall under the Internal Revenue Code of 1986; the Tariff Act of 1930; the Occupational Safety and Health Act of 1970; and the Social Security Act; are exempt from the requirements of the Act.

Method of Calculation

Under the Act, the inflation adjustment for each applicable CMP is determined by increasing the maximum CMP amount per violation by a cost-of-living adjustment. The cost-of-living adjustment equals the percentage difference between the Consumer Price Index (CPI) for the calendar year preceding the adjustment, and the CPI for the calendar year in which the amount of the CMP was last set in accordance with the law. Any increase calculated under this adjustment is subject to a specific rounding formula set forth in the Act. Since the Coast Guard's penalties have never previously been adjusted for inflation, this first statutorily required adjustment will be limited to ten percent for every penalty. Table A below sets forth each CMP provision which is being increased and shows the intermediate calculations performed to arrive at the adjusted final maximum penalty contained in the last column.

TABLE A.—SUMMARY OF CIVIL MONETARY PENALTY INFLATION ADJUSTMENT CALCULATIONS

U.S. Code citation	Civil monetary penalty description	Year penalty amount was last set by law	Maximum penalty amount set by law as of 10/23/96	Inflation factor calculation	Maximum penalty increase after P.L. 101–410 rounding	Maximun penalty amount after increase and P.L. 101–410 rounding	Maximun penalty amount after P.L. 101–410 rounding and 10% limit
14 U.S.C. 88(c)	Saving Life and Property	1990	$5,000	458.7/389.1	$1,000	$6,000	$5,500
14 U.S.C. 645(h)	Confidentiality of Medical Quality Assurance Records (first offense).	1992	3,000	458.7/419.9	0	3,000	3,000
14 U.S.C. 645(h)	Confidentiality of Medical Quality Assurance Records (subsequent offense).	1992	20,000	458.7/419.9	2,000	22,000	22,000
33 U.S.C. 471	Anchorage Ground/Harbor Regulations General.	1983	100	458.7/298.1	50	150	110
33 U.S.C. 474	Anchorage Ground/Harbor Regulations St. Mary's River.	1968	200	458.7/97.1	700	900	220
33 U.S.C. 495	Bridges/Failure to Comply with Regulations.	1983	1,000	458.7/298.1	500	1,500	1,100
33 U.S.C. 499	Bridges/Drawbridges	1988	1,000	458.7/353.5	300	1,300	1,100
33 U.S.C. 502	Bridges/Failure to Alter Bridge Obstructing Navigation.	1982	1,000	458.7/290.6	600	1,600	1,100
33 U.S.C. 533	Bridges/Maintenance & Operation.	1983	1,000	458.7/298.1	500	1,500	1,100
33 U.S.C. 1208(a)	Bridge to Bridge Communication.	1971	500	458.7/121.5	1,400	1,900	550
33 U.S.C. 1208(b)	Bridge to Bridge Communication.	1971	500	458.7/121.5	1,400	1,900	550
33 U.S.C. 1232	PWSA Regulations	1990	25,000	458.7/389.1	5,000	30,000	27,500
33 U.S.C. 1236(b)	Vessel Navigation: Regattas or Marine Parades.	1990	5,000	458.7/389.1	1,000	6,000	5,500
33 U.S.C. 1236(c)	Vessel Navigation: Regattas or Marine Parades.	1990	5,000	458.7/389.1	1,000	6,000	5,500
33 U.S.C. 1236(d)	Vessel Navigation: Regattas or Marine Parades.	1990	2,500	458.7/389.1	0	2,500	2,500
33 U.S.C. 1319(d)	Pollution Prevention	1987	25,000	458.7/340.1	10,000	35,000	27,500
33 U.S.C. 1319(a)(2)(A)	Pollution Prevention (per violation).	1987	10,000	458.7/340.1	3,000	13,000	11,000

TABLE A.—SUMMARY OF CIVIL MONETARY PENALTY INFLATION ADJUSTMENT CALCULATIONS—Continued

U.S. Code citation	Civil monetary penalty description	Year penalty amount was last set by law	Maximum penalty amount set by law as of 10/23/96	Inflation factor calculation	Maximum penalty increase after P.L. 101–410 rounding	Maximun penalty amount after increase and P.L. 101–410 rounding	Maximun penalty amount after P.L. 101–410 rounding and 10% limit
33 U.S.C. 1319(g)(2)(A)	Pollution Prevention (total under subparagraph).	1987	25,000	458.7/340.1	10,000	35,000	27,500
33 U.S.C. 1319(g)(2)(B)	Pollution Prevention (per day of violation).	1987	10,000	458.7/340.1	3,000	13,000	11,000
33 U.S.C. 1319(g)(2)(B)	Pollution Prevention (total under subparagraph).	1987	125,000	458.7/340.1	40,000	165,000	137,500
33 U.S.C. 1321(b)(6)(B)(i)	Oil/Hazardous Substances: Discharges (per violation).	1990	10,000	458.7/389.1	2,000	12,000	11,000
33 U.S.C. 3121(b)(6)(B)(i)	Oil/Hazardous Substances: Discharges (total under paragraph).	1990	25,000	458.7/389.1	5,000	30,000	27,500
33 U.S.C. 1321(b)(6)(B)(ii)	Oil/Hazardous Substances: Discharges (per day of violation.	1990	10,000	458.7/389.1	2,000	12,000	11,000
33 U.S.C. 1321(b)(6)(B)(ii)	Oil/Hazardous Substances: Discharges (total under paragraph).	1990	125,000	458.7/389.1	20,000	145,000	137,500
33 U.S.C. 1321(b)(7)(A)	Oil/Hazardous Substances: Discharges (per day of violation.	1990	25,000	458.7/389.1	5,000	30,000	27,500
33 U.S.C. 1321(b)(7)(A)	Oil/Hazardous Substances: Discharges (per barrel of oil or unit of hazsub discharged).	1990	1,000	458.7/389.1	200	1,200	1,100
33 U.S.C. 1321(b)(7)(B)	Oil/Hazardous Substances: Discharges.	1990	25,000	458.7/389.1	5,000	30,000	27,500
33 U.S.C. 1321(b)(7)(C)	Oil/Hazardous Substances: Discharges.	1990	25,000	458.7/389.1	5,000	30,000	27,500
33 U.S.C. 1321(b)(7)(D)	Oil/Hazardous Substances: Discharges (per barrel of oil or unit of hazsub discharged).	1990	3,000	458.7/389.1	1,000	4,000	3,300
33 U.S.C. 1321(j)	Oil/Hazardous Substances Prevention Regulations.	1990	25,000	458.7/389.1	5,000	30,000	27,500
33 U.S.C. 1322(j)	Marine Sanitation Devices	1987	2,000	458.7/340.1	1,000	3,000	2,200
33 U.S.C. 1322(j)	Marine Sanitation Devices	1987	5,000	458.7/340.1	2,000	7,000	5,500
33 U.S.C. 1517(a)	Deepwater Ports Regulations.	1989	10,000	458.7/371.7	2,000	12,000	11,000
33 U.S.C. 1608(a)	International Regulations	1980	5,000	458.7/247.6	4,000	9,000	5,500
33 U.S.C. 1608(b)	International Regulations	1980	5,000	458.7/247.6	4,000	9,000	5,500
33 U.S.C. 1908(b)(1)	Pollution from Ships	1980	25,000	458.7/247.6	20,000	45,000	27,500
33 U.S.C. 1908(b)(2)	Pollution from Ships	1980	5,000	458.7/247.6	4,000	9,000	5,500
33 U.S.C. 2072(a)	Inland Navigation Rules	1980	5,000	458.7/247.6	4,000	9,000	5,500
33 U.S.C. 2072(b)	Inland Navigation Rules	1980	5,000	458.7/247.6	4,000	9,000	5,500
33 U.S.C. 2609(a)	Shore Protection	1988	25,000	458.7/353.6	5,000	30,000	27,500
33 U.S.C. 2609(b)	Shore Protection	1988	10,000	458.7/353.6	3,000	13,000	11,000
33 U.S.C. 2716a(a)	Oil Pollution Liability and Compensation.	1990	25,000	458.7/389.1	5,000	30,000	27,500
46 U.S.C. App 1805(c)(2)	Suspension of Passenger Service.	1986	50,000	458.7/327.9	20,000	70,000	55,000
46 U.S.C. 2302(a)	Negligent Operations	1990	1,000	458.7/389.1	200	1,200	1,100
46 U.S.C. 2302(c)(1)	Negligent Operations	1990	1,000	458.7/389.1	200	1,200	1,100
46 U.S.C. 2306(a)(2)(B)(4)	Vessel Reporting Requirements: Owner.	1984	5,000	458.7/310.7	2,000	7,000	5,500
46 U.S.C. 2306(b)(2)	Vessel Reporting Requirements: Master.	1984	1,000	458.7/310.7	500	1,500	1,100
46 U.S.C. 3102(c)(1)	Immersion Suits	1988	5,000	458.7/353.6	1,000	6,000	5,500
46 U.S.C. 3302(j)(5)	Inspection Permit	1986	1,000	458.7/327.9	400	1,400	1,100
46 U.S.C. 3318(a)	Vessel Inspection	1990	5,000	458.7/389.1	1,000	6,000	5,500
46 U.S.C. 3318(g)	Vessel Inspection	1990	5,000	458.7/389.1	1,000	6,000	5,500
46 U.S.C. 3318(h)	Vessel Inspection	1990	1,000	458.7/389.1	200	1,200	1,100
46 U.S.C. 3318(i)	Vessel Inspection	1990	1,000	458.7/389.1	200	1,200	1,100
46 U.S.C. 3318(j)(1)	Vessel Inspection	1990	10,000	458.7/389.1	2,000	12,000	11,000
46 U.S.C. 3318(j)(1)	Vessel Inspection	1990	2,000	458.7/389.1	0	2,000	2,000
46 U.S.C. 3318(k)	Vessel Inspection	1990	10,000	458.7/389.1	2,000	12,000	11,000

TABLE A.—SUMMARY OF CIVIL MONETARY PENALTY INFLATION ADJUSTMENT CALCULATIONS—Continued

U.S. Code citation	Civil monetary penalty description	Year penalty amount was last set by law	Maximum penalty amount set by law as of 10/23/96	Inflation factor calculation	Maximum penalty increase after P.L. 101–410 rounding	Maximun penalty amount after increase and P.L. 101–410 rounding	Maximun penalty amount after P.L. 101–410 rounding and 10% limit
46 U.S.C. 3318(l)	Vessel Inspection	1990	5,000	458.7/389.1	1,000	6,000	5,500
46 U.S.C. 3502(e)	List/Count of Passengers	1983	100	458.7/298.1	50	150	110
46 U.S.C. 3504(c)	Notification to Passengers	1983	10,000	458.7/298.1	5,000	15,000	11,000
46 U.S.C. 3504(c)	Notification to Passengers	1983	500	458.7/298.1	300	800	550
46 U.S.C. 3506	Copies of Laws on Passenger Vessels.	1983	200	458.7/298.1	100	300	220
46 U.S.C. 3718(a)(1)	Dangerous Cargo Carriage	1990	25,000	458.7/389.1	5,000	30,000	27,500
46 U.S.C. 4106	Uninspected Vessels	1988	5,000	458.7/353.6	1,000	6,000	5,500
46 U.S.C. 4311(b)	Recreational Vessels	1984	100,000	458.7/310.7	45,000	145,000	110,000
46 U.S.C. 4311(b)	Recreational Vessels	1984	2,000	458.7/310.7	1,000	3,000	2,200
46 U.S.C. 4311(c)	Recreational Vessels	1984	1,000	458.7/310.7	500	1,500	1,100
46 U.S.C. 4507	Vessel Inspection	1988	5,000	458.7/353.6	1,000	6,000	5,500
46 U.S.C. 5116(a)	Load Lines	1990	5,000	458.7/389.1	1,000	6,000	5,500
46 U.S.C. 5116(b)	Load Lines	1990	10,000	458.7/389.1	2,000	12,000	11,000
46 U.S.C. 5116(c)	Load Lines	1990	5,000	458.7/389.1	1,000	6,000	5,500
46 U.S.C. 6103(a)	Reporting Marine Casualties.	1988	1,000	458.7/353.6	300	1,300	1,100
46 U.S.C. 6103(b)	Reporting Marine Casualties.	1988	5,000	458.7/353.6	1,000	6,000	5,500
46 U.S.C. 8101(e)	Manning of Inspected Vessels.	1990	1,000	458.7/389.1	200	1,200	1,100
46 U.S.C. 8101(f)	Manning of Inspected Vessels.	1990	10,000	458.7/389.1	2,000	12,000	11,000
46 U.S.C. 8101(g)	Manning of Inspected Vessels.	1990	10,000	458.7/389.1	2,000	12,000	11,000
46 U.S.C. 8102(a)	Watchmen on Passenger Vessels.	1984	1,000	458.7/310.7	500	1,500	1,100
46 U.S.C. 8103(f)	Citizenship Requirements	1988	500	458.7/353.6	100	600	550
46 U.S.C. 8104(i)	Watches on Vessels	1990	10,000	458.7/389.1	2,000	12,000	11,000
46 U.S.C. 8104(j)	Watches on Vessels	1990	10,000	458.7/389.1	2,000	12,000	11,000
46 U.S.C. 8302(e)	Staff Department on Vessels.	1985	100	458.7/322.3	40	140	110
46 U.S.C. 8304(d)	Officer's Competency Certificates.	1983	100	458.7/298.1	50	150	110
46 U.S.C. 8502(e)	Coastwise Pilotage	1990	10,000	458.7/389.1	2,000	12,000	11,000
46 U.S.C. 8502(f)	Coastwise Pilotage	1990	10,000	458.7/389.1	2,000	12,000	11,000
46 U.S.C. 8503	Federal Pilots	1990	25,000	458.7/389.1	5,000	30,000	27,500
46 U.S.C. 8701(d)	Merchant Mariners Documents.	1986	500	458.7/327.9	200	700	550
46 U.S.C. 8702(e)	Crew Requirements	1990	10,000	458.7/389.1	2,000	12,000	11,000
46 U.S.C. 8906	Small Vessel Manning	1983	1,000	458.7/298.1	500	1,500	1,100
46 U.S.C. 9308(a)	Pilotage: Great Lakes	1990	10,000	458.7/389.1	2,000	12,000	11,000
46 U.S.C. 9308(b)	Pilotage: Great Lakes	1990	10,000	458.7/389.1	2,000	12,000	11,000
46 U.S.C. 9308(c)	Pilotage: Great Lakes	1990	10,000	458.7/389.1	2,000	12,000	11,000
46 U.S.C. 10104(b)	Failure to Report Sexual Offense.	1989	5,000	458.7/371.7	1,000	6,000	5,500
46 U.S.C. 10307	Posting of Agreements	1983	100	458.7/298.1	50	150	110
46 U.S.C. 10308(b)	Foreign Engagements by Seamen.	1983	100	458.7/298.1	50	150	110
46 U.S.C. 10309(b)	Replacement of Lost/Deserted Seamen.	1983	200	458.7/298.1	100	300	220
46 U.S.C. 10310	Discharge of Seamen	1983	50	458.7/298.1	30	80	55
46 U.S.C. 10312(c)	Foreign/Intercoastal Voyages.	1983	100	458.7/298.1	50	150	110
46 U.S.C. 10314(a)(2)	Pay Advances to Seamen	1983	500	458.7/298.1	300	800	550
46 U.S.C. 10314(b)	Pay Advances to Seamen	1983	500	458.7/298.1	300	800	550
46 U.S.C. 10315(c)	Allotments to Seamen	1983	500	458.7/298.1	300	800	550
46 U.S.C. 10321	Seamen Protection: General.	1983	200	458.7/298.1	100	300	220
46 U.S.C. 10505(b)	Advances	1983	500	458.7/298.1	300	800	550
46 U.S.C. 10508(b)	Seamen Protection: General.	1983	20	458.7/298.1	10	30	22
46 U.S.C. 10711	Effects of Deceased Seamen.	1983	200	458.7/298.1	100	300	220
46 U.S.C. 10902(a)(2)	Complaints of Unfitness	1983	500	458.7/298.1	300	800	550

TABLE A.—SUMMARY OF CIVIL MONETARY PENALTY INFLATION ADJUSTMENT CALCULATIONS—Continued

U.S. Code citation	Civil monetary penalty description	Year penalty amount was last set by law	Maximum penalty amount set by law as of 10/23/96	Inflation factor calculation	Maximum penalty increase after P.L. 101–410 rounding	Maximun penalty amount after increase and P.L. 101–410 rounding	Maximun penalty amount after P.L. 101–410 rounding and 10% limit
46 U.S.C. 10903(d)	Proceedings on Examination of Vessel.	1983	100	458.7/298.1	50	150	110
46 U.S.C. 10907(b)	Permission to Make Complaint.	1983	500	458.7/298.1	300	800	550
46 U.S.C. 11101(f)	Accommodations for Seamen.	1985	500	458.7/322.3	200	700	550
46 U.S.C. 11102(b)	Medicine Chests on Vessels.	1983	500	458.7/298.1	300	800	550
46 U.S.C. 11104(b)	Destitute Seamen	1983	100	458.7/298.1	50	150	110
46 U.S.C. 11105(c)	Wages on Discharge	1983	500	458.7/298.1	300	800	550
46 U.S.C. 11303(a)	Log Books	1983	200	458.7/298.1	100	300	220
46 U.S.C. 11303(b)	Log Books	1983	200	458.7/298.1	100	300	220
46 U.S.C. 11303(c)	Log Books	1983	150	458.7/298.1	100	250	185
46 U.S.C. 11506	Carrying of Sheath Knives	1983	50	458.7/298.1	30	80	55
46 U.S.C. 12122(a)	Identification of Vessels	1986	500	458.7/327.9	200	700	550
46 U.S.C. 12309(b)	Numbering of Undocumented Vessels.	1983	1,000	458.7/298.1	500	1,500	1,100
46 U.S.C. 12507(b)	Vessel Identification System.	1988	10,000	458.7/353.6	3,000	13,000	11,000
46 U.S.C. 14701	Measurement of Vessels	1986	20,000	458.7/327.9	10,000	30,000	22,000
46 U.S.C. 14701	Registry/Recording: Tonnage.	1986	20,000	458.7/327.9	10,000	30,000	22,000
46 U.S.C. 14702	Measurement/False Statements.	1986	20,000	458.7/327.9	10,000	30,000	22,000
46 U.S.C. 31309	Instruments and Liens	1988	10,000	458.7/353.6	3,000	13,000	11,000
49 U.S.C. 1809(a)(1)	Hazardous Materials—Relating to Vessels.	1975	10,000	458.7/160.6	18,000	28,000	11,000

Future adjustments will also be made in accordance with the statutory formula. Since today's inflation adjustments are being made in March 1997, the next scheduled adjustment will cover inflation from June 1996 to June of the year in which the next adjustment is made. The Debt Collection Improvement Act requires that penalties be adjusted for inflation at least once every four years.

This rule also eliminates or revises existing sections of the Code of Federal Regulations (CFR) which contain civil penalty amounts. These sections are now obsolete as they contain penalty amounts which have not been adjusted for inflation in accordance with the Debt Collection Improvement Act of 1996. The Coast Guard has incorporated all penalty amounts into a single table for ease of use by the public. Because the volume of the CFR which contains Title 33 is widely disseminated, the Coast Guard is placing the table, including all applicable Coast Guard administered penalties from Titles 33, 46 and 49, in a new part 27 within 33 CFR. The Coast Guard has attempted to include in the table all penalties covered by the Act. However, due to factors such as subsequent statutory changes, some penalties may not be included in the table. If a penalty amount is not included in the table its statutorily set amount will control.

Waiver of Proposed Rulemaking

In developing this final rule, the Coast Guard is waiving the usual notice of proposed rulemaking and public comment procedures set forth in the Administrative Procedure Act (APA) (5 U.S.C. 553). The APA provides an exception to the notice and comment procedures when an agency finds there is good cause for dispensing with such procedures on the bases that they are impracticable, unnecessary or contrary to the public interest. The Coast Guard has determined that, under 5 U.S.C. 553(b)(3)(B), good cause exists for dispensing with the notice of proposed rulemaking and public comment procedures for this rule. Specifically, this rulemaking implements the Debt Collection Improvement Act of 1996, which leaves the agency no discretion. Accordingly, the Coast Guard believes that opportunity for prior comment is unnecessary and is issuing these revised regulations as a final rule that will apply to all future cases under this authority. Other administrations with the Department of Transportation have also followed this procedure.

Assessment

This final rule is exempt from review under Executive Order 12866 because it is limited to the adoption of statutory language without interpretation.

Small Entities

Under the Regulatory Flexibility Act (5 U.S.C. 601–612) the Coast Guard is required to assess the impact of regulations on small business entities. While some penalties may have an impact on small entities, it is the nature of the violation and not the size of the entity that will result in an action by the Coast Guard. Moreover, although this rule increases the maximum penalty that could be assessed, it does not change the Coast Guard's existing enforcement policies which provide for consideration of the size of an entity and the economic impact of the penalty on that entity. The aggregate economic impact of this rulemaking on small business entities should be minimal. Therefore, the Coast Guard certifies that this final rule will not have a significant economic impact on a substantial number of small business entities.

Assistance for Small Entities

In accordance with section 213(a) of the Small Business Regulatory Enforcement Fairness Act of 1996 (Pub. L. 104–121), the Coast Guard will provide assistance to small entities to determine how this rule applies to them. If you are a small entity against which a civil penalty has been assessed by the Coast Guard and you need assistance understanding the provisions of this rule or how it applies to your circumstances, please bring this issue to the attention of the hearing officer in your case.

Collection of Information

This rule contains no collection-of-information requirements under the Paperwork Reduction Act (44 U.S.C. 3501 *et seq.*).

Federalism

The Coast Guard has analyzed this rule under the principles and criteria contained in Executive Order 12612 and has determined that this rule does not have sufficient federalism implications to warrant the preparation of a Federalism Assessment.

Environment

The Coast Guard considered the environmental impact of this rule and concluded that, under paragraph 2.B.2 of Commandant Instruction M16475.1B, (as revised by 59 FR 38654, July 29, 1994), this rule is categorically excluded from further environmental documentation because it contains only regulations which are editorial or procedural in nature. A ''Categorical Exclusion Determination'' is available in the docket for inspection or copying where indicated under **ADDRESSES**.

List of Subjects

33 CFR Part 5

Volunteers.

33 CFR Part 26

Communications equipment, Marine safety, Radio, Telephone, Vessels.

33 CFR Part 27

Marine safety, Oil pollution, Penalties, Vessels, Waterways.

33 CFR Part 95

Alcohol abuse, Drug abuse, Marine safety, Penalties.

33 CFR Part 100

Marine safety, Navigation (water), Reporting and recordkeeping requirements, Waterways.

33 CFR Part 110

Anchorage grounds.

33 CFR Part 130

Hazardous materials transportation, Insurance, Oil pollution, Reporting and recordkeeping requirements, Vessels, Water pollution control.

33 CFR Part 136

Administrative practice and procedure, Claims, Continental shelf, Insurance, Oil pollution.

33 CFR Part 138

Insurance, Maritime carriers, Reporting and recordkeeping requirements, Water pollution control.

33 CFR Part 140

Continental shelf, Investigations, Marine safety, Occupational safety and health, Penalties, Reporting and recordkeeping requirements.

33 CFR Part 151

Administrative practice and procedure, Oil pollution, Penalties, Reporting and recordkeeping requirements, Water pollution control.

33 CFR Part 153

Hazardous substances, Oil pollution, Reporting and recordkeeping requirements, Water pollution control.

33 CFR Part 177

Marine safety.

46 CFR Part 2

Marine safety, Reporting and recordkeeping requirements, Vessels.

For the reasons set out in the preamble, the Coast Guard amends 33 CFR parts 5, 26, 95, 100, 110, 130, 136, 138, 140, 151, 153, and 177; and 46 CFR part 2; and adds 33 CFR part 27.

Title 33, Chapter I

PART 5—[AMENDED]

1. The authority citation for part 5 is revised to read as follows:

Authority: 14 U.S.C. 633, 892; 49 CFR 1.46.

§ 5.67 [Removed]

2. Section 5.67 is removed.

PART 26—[AMENDED]

3. The authority citation for part 26 continues to read as follows:

Authority: 14 U.S.C. 2; 33 U.S.C. 1201–1208; 49 CFR 1.45(b), 1.46; Rule 1, International Regulations for the Prevention of Collisions at Sea.

§ 26.10 [Removed]

4. Section 26.10 is removed.

5. Add a new part 27 to read as follows:

PART 27—ADJUSTMENT OF CIVIL MONETARY PENALTIES FOR INFLATION

Sec.
27.1 Applicability.
27.2 Effective date.
27.3 Penalty Adjustment Table.

Authority: Pub. L. 101–410, 104 Stat. 890 as amended by Pub. L. 104–134; 49 CFR 1.45, 1.46.

PART 27—ADJUSTMENT OF CIVIL MONETARY PENALTIES FOR INFLATION

§ 27.1 Applicability.

This part applies to each statutory provision under the laws administered by the Coast Guard concerning the maximum civil monetary penalty which may be assessed in either civil judicial or administrative proceedings.

§ 27.2 Effective date

The increased penalty amounts set forth in this rule apply to all violations under the applicable statutes and regulations which occur after May 7, 1997.

§ 27.3 Penalty Adjustment Table

The adjusted statutory penalty provisions and their maximum applicable amounts are set out in Table 1. The last column of the table provides the newly effective maximum penalty amounts.

TABLE 1.—CIVIL MONETARY PENALTY INFLATION ADJUSTMENTS *

U.S. Code citation	Civil monetary penalty description	New maximum penalty amount
14 U.S.C. 88(c)	Saving Life and Property	$5,500
14 U.S.C. 645(h)	Confidentiality of Medical Quality Assurance Records (first offense)	3,000

TABLE 1.—CIVIL MONETARY PENALTY INFLATION ADJUSTMENTS *—Continued

U.S. Code citation	Civil monetary penalty description	New maximum penalty amount
14 U.S.C. 645(h)	Confidentiality of Medical Quality Assurance Records (subsequent offense)	22,000
33 U.S.C. 471	Anchorage Ground/Harbor Regulations General	110
33 U.S.C. 474	Anchorage Ground/Harbor Regulations St. Mary's River	220
33 U.S.C. 495	Bridges/Failure to Comply with Regulations	1,100
33 U.S.C. 499	Bridges/Drawbridges	1,100
33 U.S.C. 502	Bridges/Failure to Alter Bridge Obstructing Navigation	1,100
33 U.S.C. 533	Bridges/Maintenance & Operation	1,100
33 U.S.C. 1208(a)	Bridge to Bridge Communication	550
33 U.S.C. 1208(b)	Bridge to Bridge Communication	550
33 U.S.C. 1232	PWSA Regulations	27,500
33 U.S.C. 1236(b)	Vessel Navigation: Regattas or Marine Parades	5,500
33 U.S.C. 1236(c)	Vessel Navigation: Regattas or Marine Parades	5,500
33 U.S.C. 1236(d)	Vessel Navigation: Regattas or Marine Parades	2,500
33 U.S.C. 1319(d)	Pollution Prevention	27,500
33 U.S.C. 1319(g)(2)(A)	Pollution Prevention (per violation)	11,000
33 U.S.C. 1319(g)(2)(A)	Pollution Prevention (total under subparagraph)	27,500
33 U.S.C. 1319(g)(2)(B)	Pollution Prevention (per day of violation)	11,000
33 U.S.C. 1319(g)(2)(B)	Pollution Prevention (total under subparagraph	137,500
33 U.S.C. 1321(b)(6)(B)(i)	Oil/Hazardous Substances: Discharges (per violation)	11,000
33 U.S.C. 1321(b)(6)(B)(i)	Oil/Hazardous Substances: Discharges (total under paragraph)	27,500
33 U.S.C. 1321(b)(6)(B)(ii)	Oil/Hazardous Substances: Discharges (per day of violation)	11,000
33 U.S.C. 1321(b)(6)(B)(ii)	Oil/Hazardous Substances: Discharges (total under paragraph)	137,500
33 U.S.C. 1321(b)(7)(A)	Oil/Hazardous Substances: Discharges (per day of violation)	27,500
33 U.S.C. 1321(b)(7)(A)	Oil/Hazardous Substances: Discharges (per barrel of oil or unit of hazsub discharged)	1,100
33 U.S.C. 1321(b)(7)(B)	Oil/Hazardous Substances: Discharges	27,500
33 U.S.C. 1321(b)(7)(C)	Oil/Hazardous Substances: Discharges	27,500
33 U.S.C. 1321(b)(7)(D)	Oil/Hazardous Substances: Discharges (per barrel of oil or unit of hazsub discharged)	3,300
33 U.S.C. 1321(j)	Oil/Hazardous Substances Prevention Regulations	27,500
33 U.S.C. 1322(j)	Marine Sanitation Devices	2,200
33 U.S.C. 1322(j)	Marine Sanitation Devices	5,500
33 U.S.C. 1517(a)	Deepwater Ports Regulations	11,000
33 U.S.C. 1608(a)	International Regulations	5,500
33 U.S.C. 1608(b)	International Regulations	5,500
33 U.S.C. 1908(b)(1)	Pollution from Ships	27,500
33 U.S.C. 1908(b)(2)	Pollution from Ships	5,500
33 U.S.C. 2072(a)	Inland Navigation Rules	5,500
33 U.S.C. 2072(b)	Inland Navigation Rules	5,500
33 U.S.C. 2609(a)	Shore Protection	27,500
33 U.S.C. 2609(b)	Shore Protection	11,000
33 U.S.C. 2716a(a)	Oil Pollution Liability and Compensation	27,500
46 U.S.C. App. 1805(c)(2)	Suspension of Passenger Service	55,000
46 U.S.C. 2302(a)	Negligent Operations	1,100
46 U.S.C. 2302(c)(1)	Negligent Operations	1,100
46 U.S.C. 2306(a)(2)(B)(4)	Vessel Reporting Requirements: Owner	5,500
46 U.S.C. 2306(b)(2)	Vessel Reporting Requirements: Master	1,100
46 U.S.C. 3102(c)(1)	Immersion Suits	5,500
46 U.S.C. 3302(j)(5)	Inspection Permit	1,100
46 U.S.C. 3318(a)	Vessel Inspection	5,500
46 U.S.C. 3318(g)	Vessel Inspection	5,500
46 U.S.C. 3318(h)	Vessel Inspection	1,100
46 U.S.C. 3318(i)	Vessel Inspection	1,100
46 U.S.C. 3318(j)(1)	Vessel Inspection	11,000
46 U.S.C. 3318(j)(1)	Vessel Inspection	2,000
46 U.S.C. 3318(k)	Vessel Inspection	11,000
46 U.S.C. 3318(l)	Vessel Inspection	5,500
46 U.S.C. 3502(e)	List/Count of Passengers	110
46 U.S.C. 3504(c)	Notification to Passengers	11,000
46 U.S.C. 3504(c)	Notification to Passengers	550
46 U.S.C. 3506	Copies of Laws on Passenger Vessels	220
46 U.S.C. 3718(a)(1)	Dangerous Cargo Carriage	27,500
46 U.S.C. 4106	Uninspected Vessels	5,500
46 U.S.C. 4311(b)	Recreational Vessels (Maximum for related series of violations)	110,000
46 U.S.C. 4311(b)	Recreational Vessels	2,200
46 U.S.C. 4311(c)	Recreational Vessels	1,100
46 U.S.C. 4507	Vessel Inspection	5,500
46 U.S.C. 5116(a)	Load Lines	5,500
46 U.S.C. 5116(b)	Load Lines	11,000
46 U.S.C. 5116(c)	Load Lines	5,500
46 U.S.C. 6103(a)	Reporting Marine Casualties	1,100
46 U.S.C. 6103(b)	Reporting Marine Casualties	5,500

TABLE 1.—CIVIL MONETARY PENALTY INFLATION ADJUSTMENTS *—Continued

U.S. Code citation	Civil monetary penalty description	New maximum penalty amount
46 U.S.C. 8101(e)	Manning of Inspected Vessels	1,100
46 U.S.C. 8101(f)	Manning of Inspected Vessels	11,000
46 U.S.C. 8101(g)	Manning of Inspected Vessels	11,000
46 U.S.C. 8102(a)	Watchmen on Passenger Vessels	1,100
46 U.S.C. 8103(f)	Citizenship Requirements	550
46 U.S.C. 8104(i)	Watches on Vessels	11,000
46 U.S.C. 8104(j)	Watches on Vessels	11,000
46 U.S.C. 8302(e)	Staff Department on Vessels	110
46 U.S.C. 8304(d)	Officer's Competency Certificates	110
46 U.S.C. 8502(e)	Coastwise Pilotage	11,000
46 U.S.C. 8502(f)	Coastwise Pilotage	11,000
46 U.S.C. 8503	Federal Pilots	27,500
46 U.S.C. 8701(d)	Merchant Mariners Documents	550
46 U.S.C. 8702(e)	Crew Requirements	11,000
46 U.S.C. 8906	Small Vessel Manning	1,100
46 U.S.C. 9308(a)	Pilotage: Great Lakes	11,000
46 U.S.C. 9308(b)	Pilotage: Great Lakes	11,000
46 U.S.C. 9308(c)	Pilotage: Great Lakes	11,000
46 U.S.C. 10104(b)	Failure to Report Sexual Offense	5,500
46 U.S.C. 10307	Posting of Agreements	110
46 U.S.C. 10308(b)	Foreign Engagements by Seamen	110
46 U.S.C. 10309(b)	Replacement of Lost/Deserted Seamen	220
46 U.S.C. 10310	Discharge of Seamen	55
46 U.S.C. 10312(c)	Foreign/Intercoastal Voyages	110
46 U.S.C. 10314(a)(2)	Pay Advances to Seamen	550
46 U.S.C. 10314(b)	Pay Advances to Seamen	550
46 U.S.C. 10315(c)	Allotments to Seamen	550
46 U.S.C. 10321	Seamen Protection: General	220
46 U.S.C. 10505(b)	Advances	550
46 U.S.C. 10508(b)	Seamen Protection: General	22
46 U.S.C. 10711	Effects of Deceased Seamen	220
46 U.S.C. 10902(a)(2)	Complaints of Unfitness	550
46 U.S.C. 10903(d)	Proceedings on Examination of Vessel	110
46 U.S.C. 10907(b)	Permission to Make Complaint	550
46 U.S.C. 11101(f)	Accommodations for Seamen	550
46 U.S.C. 11102(b)	Medicine Chests on Vessels	550
46 U.S.C. 11104(b)	Destitute Seamen	110
46 U.S.C. 11105(c)	Wages on Discharge	550
46 U.S.C. 11303(a)	Log Books	220
46 U.S.C. 11303(b)	Log Books	220
46 U.S.C. 11303(c)	Log Books	185
46 U.S.C. 11506	Carrying of Sheath Knives	55
46 U.S.C. 12122(a)	Identification of Vessels	550
46 U.S.C. 12309(b)	Numbering of Undocumented Vessels	1,100
46 U.S.C. 12507(b)	Vessel Identification System	11,000
46 U.S.C. 14701	Measurement of Vessels	22,000
46 U.S.C. 14701	Registry/Recording: Tonnage	22,000
46 U.S.C. 14702	Measurement/False Statements	22,000
46 U.S.C. 31309	Instruments and Liens	11,000
46 U.S.C. 1809(a)(1)	Hazardous Materials—Relating to Vessels	11,000

*Table may not include all civil monetary penalties. If penalty is not listed, check applicable statute for penalty amount.

PART 95—[AMENDED]

6. The authority citation for part 95 is revised to read as follows:

Authority: 33 U.S.C. 2071; 46 U.S.C. 2302; 49 CFR 1.46.

§ 95.055 [Removed]

7. Section 95.055 is removed.

PART 100—[AMENDED]

8. The authority citation for part 100 is revised to read as follows:

Authority: 33 U.S.C. 1233 through 1236; 49 CFR 1.46; 33 CFR 100.35.

§ 100.101 [Amended]

9. In § 100.101, paragraph (c)(12) is removed.

§ 100.102 [Amended]

10. In § 100.102, paragraph (c)(5) is removed.

§ 100.103 [Amended]

11. In § 100.103, paragraph (c)(7) is removed.

§ 100.104 [Amended]

12. In § 100.104, paragraph (c)(9) is removed.

§ 100.108 [Amended]

13. In § 100.108, paragraph (b)(6) is removed.

§ 100.504 [Amended]

14. In § 100.504, paragraph (c)(5) is removed.

§ 100.505 [Amended]

15. In § 100.505, paragraph (c)(7) is removed.

16. The authority citation for part 110 is revised to read as follows:

Authority: 33 U.S.C. 471, 1221 through 1236, 2030, 2035, 2071; 49 CFR 1.46 and 33 CFR 1.05–1(g).

§ 110.1a [Amended]

17. In § 110.1a, paragraph (b) is removed.

PART 130—[AMENDED]

18. The authority citation for part 130 is revised to read as follows:

Authority: 33 U.S.C. 2716, 2716a; E.O. 12777, 3 CFR, 1991 Comp., p. 351; 49 CFR 1.46.

19. Section 130.14 is revised to read as follows:

§ 130.14 Enforcement.

Enforcement actions will be carried out under the provisions of 33 CFR 138.140.

PART 136—[AMENDED]

20. The authority citation for part 136 is revised to read as follows:

Authority: 31 U.S.C. 3801 through 3812; 33 U.S.C. 2713, 2714; E.O. 12777, 3 CFR, 1991 Comp., p. 351; 49 CFR 1.46.

§ 136.9 Falsification of claims. [Amended]

21. In § 136.9, remove the words ''of up to $5,000''.

PART 138—[AMENDED]

22. The authority citation for part 138 is revised to read as follows:

Authority: 33 U.S.C. 2716, 2716a; 42 U.S.C. 9608, 9609; sec. 7(b), E.O. 12580, 3 CFR, 1987 Comp., p. 198; E.O. 12777, 3 CFR 1991 Comp., p. 351; 49 CFR 1.46; § 138.30 also issued under the authority of 46 U.S.C. 2103, 14302.

23. In § 138.140, paragraph (a) is revised to read as follows:

§ 138.140 Enforcement.

(a) Any person who fails to comply with this part with respect to evidence of financial responsibility under section 1016 of OPA 90 (33 U.S.C. 2716) is subject to a civil penalty. In addition, under section 4303(b) of that Act (33 U.S.C. 2716a(b)), the Attorney General may secure such relief as may be necessary to compel compliance with this part including termination of operations. Further, any person who fails to comply with this part with respect to evidence of financial responsibility under section 108(a)(1) of CERCLA (42 U.S.C. 9608(a)(1)), is subject to a Class I administrative civil penalty and a Class II administrative civil penalty or judicial penalty.

* * * * *

24. In § 138.140, paragraph (b), remove ''section 4197 of the Revised Statutes (46 U.S.C. 91)'' and add, in its place ''46 U.S.C. App. 91''.

* * * * *

PART 140—[AMENDED]

25. The authority citation for part 140 is revised to read as follows:

Authority: 42 U.S.C. 1333, 1348, 1350, 1356; 49 CFR 1.46.

§ 140.35 Sanctions

26. In § 140.35, paragraph (a)(3), remove the words ''of not more than $10,000''.

PART 151—[AMENDED]

27. The authority citation for part 151 is revised to read as follows:

Authority: 33 U.S.C. 1321, 1903, 1908; E.O. 12777, 3 CFR, 1991 Comp., p. 351; 49 CFR 1.46.

§ 151.04 Penalties for violation

28. In § 151.04, paragraph (a), remove the words ''not to exceed $25,000''.

29 In § 151.04, paragraph (b), remove the words ''not to exceed $5,000''.

30. In § 151.59 paragraphs (d)(6) and (e)(2)(ii) are revised to read as follows:

§ 151.59 Placards.

* * * * *

(d) * * *

(6) A person who violates the above requirements is liable for a civil penalty for each violation, and the criminal penalties of a class D felony.

* * * * *

(e) * * *

(2) * * *

(ii) A person who violates the above requirements is liable for a civil penalty for each violation, and the criminal penalties of a class D felony.

* * * * *

PART 153—[AMENDED]

31. The authority citation for part 153 continues to read as follows:

Authority: 14 U.S.C. 633; 33 U.S.C. 1321; 42 U.S.C. 9615; E.O. 12580, 3 CFR, 1987 Comp., p. 193; E.O. 12777, 3 CFR, 1991 Comp., p. 351; 49 CFR 1.45 and 1.46.

32. Section 153.307 is revised to read as follows:

§ 153.307 Penalties.

Section 311(b)(7)(C) of the Act, as amended, prescribes that any person who fails or refuses to comply with the provisions of this subpart is liable for a civil penalty per day of violation.

PART 177—[AMENDED]

33. The authority citation for part 177 is revised to read as follows:

Authority: 46 U.S.C. 4302, 4311; 49 CFR 1.45 and 1.46.

34. Section 177.09 is revised to read as follows:

§ 177.09 Penalties.

An operator of a vessel who does not follow the directions of a Coast Guard Boarding Officer prescribed in § 177.05 is, in addition to any other penalty prescribed by law, subject to—

(a) The criminal penalties of 46 U.S.C. 4311, which provides that a person willfully operating a recreational vessel in violation of 46 U.S.C., Chapter 43 or regulations issued thereunder, shall be fined not more than $5,000, imprisoned for not more than one year, or both.

(b)(1) The civil penalties for violating 46 U.S.C. 4307(a)(1).

(2) The civil penalties of 46 U.S.C. 4311, which provides that a person violating any other provision of 43 U.S.C., Chapter 43 or regulation issued thereunder is liable to the United States Government for a civil penalty, and, if the violation involves the operation of a vessel, the vessel is liable in rem for the penalty.

Title 46, Chapter I

PART 2—[AMENDED]

35. The authority citation for part 2 is revised to read as follows:

Authority: 14 U.S.C. 664; 31 U.S.C. 9701; 33 U.S.C. 1903; 43 U.S.C. 1333, 1356; 46 U.S.C. 2110, 3306, 3703; E.O. 12234, 3 CFR, 1980 Comp., p. 277; E.O. 12777, 3 CFR, 1991 Comp., p. 351; 49 CFR 1.46; Subpart 2.45 also issued under the authority of 64 Stat. 1120.

§ 2.10–135 Penalties [Amended]

36. In § 2.10–135, paragraph (a), remove the words ''of not more than $5,000''.

37. The heading Subpart 2.50 is revised and § 2.50–1 is added to read as follows:

Subpart 2.50—Penalties

§ 2.50–1 Penalty procedures.

Civil and criminal penalty procedures appear in 33 CFR part 1. Civil monetary penalty amounts are set forth in 33 CFR part 27.

Dated: March 24, 1997.

Paul M. Blayney,

Rear Admiral, U.S. Coast Guard, Chief Counsel.

[FR Doc. 97–8781 Filed 4–7–97; 8:45 am]

BILLING CODE 4910–14–M

ENVIRONMENTAL PROTECTION AGENCY

40 CFR Part 52

[IL 150; FRL–5804–2]

Approval and Promulgation of Implementation Plan; Illinois

AGENCY: Environmental Protection Agency (USEPA).

ACTION: Direct final rule.

SUMMARY: In this action USEPA is approving the State Implementation Plan (SIP) revision request submitted by the Illinois Environmental Protection Agency (IEPA) on August 15, 1996. In the August 15 request, IEPA requested that the Marathon Oil Company in Robinson, Illinois be granted a carbon monoxide (CO) variance with specified conditions beginning January 19, 1996, and ending August 4, 1997. This variance exempts the Marathon Oil Company from the emission limits specified in the relevant CO SIP approved May 31, 1972 and revised February 21, 1980, thereby allowing its fluid bed catalytic cracking unit (FCCU) to emit 300 parts per million (ppm) of CO corrected for 50 percent excess air (Corrected) instead of the SIP emission limit of 200 ppm Corrected. The conditions require that the Marathon Oil Company utilize all means possible to minimize emissions and implement a plan of compliance submitted as part of the SIP revision. In this action, USEPA is approving the requested SIP revision through a ''direct final'' rulemaking; the rationale for this approval is set forth below. Elsewhere in this **Federal Register**, USEPA is proposing approval and soliciting comment on this direct final action; if adverse comments are received, USEPA will withdraw the direct final and address the comments received in a new final rule; otherwise, no further rulemaking will occur on this requested SIP revision. The USEPA is approving this SIP revision request because modeling shows that the emission limits are adequate to protect the CO national ambient air quality standards (NAAQS).

DATES: This action is effective on June 9, 1997, unless USEPA receives adverse or critical comments by May 8, 1997. If the effective date is delayed, timely notification will be published in the **Federal Register**.

ADDRESSES: Written comments should be mailed to: J. Elmer Bortzer, Chief, Regulation Development Section, Air Programs Branch (AR–18J), U.S. Environmental Protection Agency, Region 5, 77 West Jackson Boulevard, Chicago, Illinois 60604.

Copies of the State submittal and USEPA's analysis of it are available for inspection at: Regulation Development Section, Air Programs Branch (AR–18J), U.S. Environmental Protection Agency, Region 5, 77 West Jackson Boulevard, Chicago, Illinois 60604.

FOR FURTHER INFORMATION CONTACT: Ryan Bahr, Environmental Engineer, Regulation Development Section, Air Programs Branch (AR–18J), U.S. Environmental Protection Agency, Region 5, 77 West Jackson Boulevard, Chicago, Illinois 60604, (312) 353–4366.

SUPPLEMENTARY INFORMATION:

I. Background

The Marathon Oil Company is located in Crawford County, Illinois which is designated attainment for CO (See 40 CFR 81.314). On May 31, 1972 (37 FR 10862) the USEPA approved the ''State of Illinois Air Pollution Implementation Plan'' as the Illinois SIP. On February 21, 1980, the USEPA approved revisions to the SIP, incorporating section 216.361 in Title 35 of the Illinois Administrative Code (35 IAC 216.361) as part of the Illinois SIP (45 FR 11472). The SIP limits petroleum and petrochemical processes to emit no more than 200 ppm Corrected of CO. The FCCU operated by the Marathon Oil Company is such a petroleum process and therefore cannot legally emit CO in excess of this limit.

On August 4 and 5 of 1993, stack tests showed the FCCU at the Marathon Oil Company to be emitting above the 200 ppm limit. The State issued a Compliance Inquiry Letter (CIL) on March 2, 1995, concerning the stack tests. The Marathon Oil Company then performed a test on March 14, finding the FCCU to be emitting less than 200 ppm Corrected. The USEPA issued a notice of violation (NOV), concerning the 1993 test results, on April 13, 1995. Then, on May 23, 1995, the Marathon Oil Company filed a petition with the State for a variance from 35 IAC. Adm. Code § 216.361(a).

On May 16, 1996, Illinois approved the variance for the period beginning on January 19, 1996, and ending August 4, 1997, as Illinois Pollution Control Board Variance 95–150 (PCB 95–150). The effective date of the Variance was January 19, 1996. A plan of compliance was also approved as part of that variance.

IEPA submitted the variance as a SIP revision request on August 15, 1996. The USEPA found the submittal to be complete in a completeness letter to IEPA on December 20, 1996.

II. Analysis of State Submittal

What Illinois designates as a variance can be considered for a SIP revision if there is evidence that no exceedances of the NAAQS would occur under the variance, and the applicable prevention of significant deterioration (PSD) requirements are acceptably addressed.

A. Air Quality Modeling

In support of the SIP revision request and to show the CO NAAQS to be protected, IEPA submitted dispersion modeling performed by a contractor for the Marathon Oil Company. The basic study entitled ''Screening Modeling of Air Emissions from the CO Boiler Bypass Stack at Robinson'' was completed May 9, 1994, and was the only analysis submitted with the original request. The USEPA requested a more detailed report and was supplied with an attachment on October 3, 1996, which was inadvertently omitted from the revision request. This report entitled ''Atmospheric Dispersion Modeling of Carbon Monoxide Emissions from the CO Boiler at the Robinson Refinery'' had been completed on May 1, 1995.

The analysis used The Industrial Source Complex—Short Term Model to calculate maximum downwind concentrations of CO for several scenarios. The highest ambient concentration resulting from an effluent concentration of 300 ppm was .03 ppm on a one hour average basis and .007 ppm on an eight hour averaging basis. The NAAQS for CO are 35 ppm on a one hour averaging basis and 9 ppm for an 8 hour averaging basis. This modeling was reviewed by the USEPA and was found to be acceptable and demonstrates that no exceedances of the NAAQS would occur under a CO emission limit of 300 ppm.

B. Prevention of Significant Deterioration

The Marathon Oil Company's FCCU was constructed in 1975, prior to the promulgation of PSD rules. The original permit was not a PSD permit and the original capacity or potential to emit, has not changed since the original construction. Therefore, PSD does not apply.

C. Test Methods

Illinois' August 15, 1996, submittal did not include revisions to or discussion of compliance test methods. The current SIP, which includes Crawford County limits and selected test methods that were simultaneously approved on May 31, 1972 (37 FR 10862), applies the stack test method in 35 IAC § 216.101 as the reference test method for evaluating compliance with

the Crawford County limits. The State's recent submittal did not request revisions to the applicable test methods. This indicates that the SIP continues to apply the test methodology in 35 IAC § 216.101 as the applicable reference test method for all of Crawford County's sources.

D. Plan of Compliance

The plan of compliance calls for revising the refinery gas burners, inspection and repair of the damper controls, installation of a flame temperature measuring devise, burner improvements, and boiler testing and optimization, all to be concluded before June 14, 1997. The USEPA realizes that this plan has the potential for decreasing CO emissions and the Marathon Oil Company shall implement the plan as written. However, the plan does not demonstrate that it will achieve compliance, and is therefore considered as routine maintenance measures and not a compliance plan. The implementation of the plan does not exempt the Marathon Oil Company from any regulations which apply to the facility.

III. USEPA's Rulemaking Action

USEPA is approving the SIP revision request submitted by the IEPA on August 15, 1996, which grants the Marathon Oil Company in Robinson, Illinois a CO variance with specified conditions beginning January 19, 1996, and ending August 4, 1997. Dispersion modeling has shown the CO emission limit of 300 ppm to be protective of the NAAQS and is therefore approved. This site-specific SIP revision consists of variance PCB 95–150, which was adopted on May 16, 1996, and became effective on January 19, 1996. This is a variance from section 35 IAC 216.361(a) as it applies to the Marathon Oil Company's fluid bed catalytic cracking unit.

The USEPA is publishing this action without prior proposal because USEPA views this as a noncontroversial revision and anticipates no adverse comments. However, in a separate document in this **Federal Register** publication, the USEPA is proposing to approve the SIP revision should adverse or critical comments be filed. This action will be effective on June 9, 1997, unless, by May 8, 1997, adverse or critical comments are received.

If the USEPA receives such comments, this action will be withdrawn before the effective date by publishing a subsequent rulemaking that will withdraw the final action. All public comments received will be addressed in a subsequent final rule based on this action serving as a proposed rule. The USEPA will not institute a second comment period on this action. Any parties interested in commenting on this action should do so at this time. If no such comments are received, the public is advised that this action will be effective on June 9, 1997.

Nothing in this action should be construed as permitting, allowing or establishing a precedent for any future request for revision to any SIP. Each request for revision to the SIP shall be considered separately in light of specific technical, economic, and environmental factors and in relation to relevant statutory and regulatory requirements.

IV. Administrative Requirements

A. Executive Order 12866

This action has been classified as a Table 3 action for signature by the Regional Administrator under the procedures published in the **Federal Register** on January 19, 1989 (54 FR 2214–2225), as revised by a July 10, 1995, memorandum from Mary D. Nichols, Assistant Administrator for Air and Radiation. The Office of Management and Budget has exempted this regulatory action from Executive Order 12866 review.

B. Regulatory Flexibility

Under the Regulatory Flexibility Act, 5 U.S.C. section 600 *et seq.*, USEPA must prepare a regulatory flexibility analysis assessing the impact of any proposed or final rule on small entities. 5 U.S.C. sections 603 and 604. Alternatively, USEPA may certify that the rule will not have a significant impact on a substantial number of small entities. Small entities include small businesses, small not-for-profit enterprises, and government entities with jurisdiction over populations of less than 50,000.

SIP approvals under section 110 and subchapter I, part D of the Clean Air Act (Act) do not create any new requirements, but simply approve requirements that the State is already imposing. Therefore, because the Federal SIP approval does not impose any new requirements, the Administrator certifies that it does not have a significant impact on any small entities affected. Moreover, due to the nature of the Federal-State relationship under the Act, preparation of a flexibility analysis would constitute Federal inquiry into the economic reasonableness of the State action. The Act forbids USEPA to base its actions concerning SIPs on such grounds. *Union Electric Co.* v. *EPA.*, 427 U.S. 246, 256–66 (1976); 42 U.S.C. 7410(a)(2).

C. Unfunded Mandates

Under Section 202 of the Unfunded Mandates Reform Act of 1995, signed into law on March 22, 1995, USEPA must undertake various actions in association with any proposed or final rule that includes a Federal mandate that may result in estimated costs to state, local, or tribal governments, or to the private sector, in the aggregate of $100 million or more. This Federal action approves pre-existing requirements under state or local law, and imposes no new requirements. Accordingly, no additional costs to state, local, or tribal governments, or the private sector, result from this action.

D. Petitions for Judicial Review

Under section 307(b)(1) of the Act, petitions for judicial review of this action must be filed in the United States Court of Appeals for the appropriate circuit by June 9, 1997. Filing a petition for reconsideration by the Administrator of this final rule does not affect the finality of this rule for the purposes of judicial review nor does it extend the time within which a petition for judicial review may be filed, and shall not postpone the effectiveness of such rule or action. This action may not be challenged later in proceedings to enforce its requirements. (See section 307(b)(2)).

List of Subjects in 40 CFR Part 52

Environmental protection, Air pollution control, Carbon monoxide, Intergovernmental relations, Reporting and record keeping requirements.

Dated: March 19, 1997.

David A. Ullrich,

Acting Regional Administrator.

For the reasons stated in the preamble, part 52, chapter I, title 40 of the Code of Federal Regulations is amended as follows:

PART 52—[AMENDED]

1. The authority citation for Part 52 continues to read as follows:

Authority: 42 U.S.C. 7401–7671q.

2. Section 52.729 is added to read as follows:

§ 52.729 Control strategy: Carbon monoxide.

The following source specific emission controls are approved: (a) Approval—On August 15, 1996, the Illinois Environmental Protection Agency requested that the Marathon Oil Company in Robinson, Illinois be

granted a carbon monoxide (CO) state implementation plan (SIP) revision with specified conditions. This SIP revision limits the Marathon Oil Company's CO emissions from its fluid bed catalytic cracking unit CO boiler to be no more than 300 parts per million of CO corrected for 50 percent excess air beginning January 19, 1996, and ending August 4, 1997. The variance became effective January 19, 1996. The SIP revision request satisfies all applicable requirements of the Clean Air Act.

(b) [Reserved]

[FR Doc. 97–8898 Filed 4–7–97; 8:45 am]

BILLING CODE 6560–50–P

ENVIRONMENTAL PROTECTION AGENCY

40 CFR Part 300

[FRL–5806–5]

National Oil and Hazardous Substances Pollution Contingency Plan National Priorities List Update

AGENCY: Environmental Protection Agency.

ACTION: Notice of partial deletion of the Geneva Industries Superfund Site from the National Priorities List.

SUMMARY: The Environmental Protection Agency (EPA) announces the deletion of a portion of the Geneva Industries Site (Site) in Houston, Texas, from the National Priorities List (NPL). The portion to be deleted (Source Control Portion of the Site) is described below. The NPL is Appendix B of 40 CFR part 300 which is the National Oil and Hazardous Substances Pollution Contingency Plan (NCP), which EPA promulgated pursuant to Section 105 of the Comprehensive Environmental Response, Compensation, and Liability Act of 1980, as amended (CERCLA). EPA and the State of Texas have determined that all appropriate Fund-financed responses under CERCLA have been implemented and that no further cleanup by responsible parties is appropriate. Moreover, EPA and the State of Texas have determined that remedial actions conducted at the Site to date have been protective of public health, welfare, and the environment.

EFFECTIVE DATE: May 8, 1997.

FOR FURTHER INFORMATION CONTACT: Ernest R. Franke, Remedial Project Manager, US EPA, Region 6, 1445 Ross Avenue, Dallas, Texas 75202–2733, (214) 665–8521.

SUPPLEMENTARY INFORMATION: The site portion to be deleted from the NPL is a portion (Source Control Portion) of the Geneva Industries Superfund Site, Houston, Texas. The Source Control Portion of the Site consists of the first seven components of the eight remedial action components of the Record of Decision (ROD) for the Site. The Source Control Portion of the Site includes: (1) Removal and disposal of all surface faacilities, (2) plugging and abandoning unnecessary monitoring wells, (3) excavation of 22,500 cubic yards of soils contaminated with greater than one hundred parts per million polychlorinated biphenyls, (4) excavation of all drums buried onsite, (5) disposal of excavated material in an EPA-approved offsite facility, (6) construction of a slurry wall barrier around the Site with a pressure relief well system, and (7) construction of a permanent protective cap across the Site surface. This partial deletion does not include the eighth ROD remedial action component (Ground Water Portion of the Site), which will remain on the NPL with remedial activities continuing for the ground water system operation. The Ground Water Portion of the Site consists of recovery and treatment of trichloroethylene contaminated ground water in the thirty-foot and one-hundred-foot sands. A Notice of Intent for Partial Deletion of this Site was published in the **Federal Register** on October 31, 1996, (61 FR 56194). The closing date for public comment was December 2, 1996. EPA received no comments during the comment period.

EPA identifies sites which appear to present a significant risk to public health, welfare, or the environment and maintains the NPL as a list of the most serious of those sites. Sites on the NPL may be the subject of remedial response actions financed using the Hazardous Substance Response Trust Fund (Fund). Any site deleted from the NPL remains eligible for Fund-financed remedial actions in the unlikely event that conditions at the site warrant such action. Section 300.425(e)(3) of the NCP provides that in the event of a significant release from a site deleted from the NPL the site shall be restored to the NPL without application of the Hazard Ranking System. Deletion of a site from the NPL does not affect responsible party liability or impede agency efforts to recover costs associated with response actions.

List of Subjects in 40 CFR Part 300

Environmental protection, Hazardous waste.

Dated: February 28, 1997.

Pamela Phillips,

Acting Regional Administrator, U.S. Environmental Protection Agency, Region 6.

For the reasons set out in the preamble, 40 CFR part 300 is amended as follows:

PART 300—[AMENDED]

1. The authority citation for part 300 continues to read as follows:

Authority: 33 U.S.C. 1321(c)(2); 42 U.S.C. 9601–9657; E.O. 12777, 56 FR 54757, 3 CFR, 1991 Comp., 351; E.O. 12580; 52 FR 2923, 3 CFR, 1987 Comp., p. 193.

2. Table 1 of Appendix B to part 300 is amended by revising the entry for ''Geneva Industries/Fuhrmann Energy'', Houston, Texas to read as follows:

Appendix B to Part 300—National Priorities List

TABLE 1.—GENERAL SUPERFUND SECTION

State	Site name	City/county	Notes
*	* * * * *	*	*
TX	Geneva Industries/Fuhrmann Energy	Houston	P
*	* * * * *	*	*

Notes: * * *
P = Sites within partial deletion(s).

* * * * *

[FR Doc. 97–8817 Filed 4–7–97; 8:45 am]

BILLING CODE 6560–50–P

ENVIRONMENTAL PROTECTION AGENCY

40 CFR Part 300

[FRL–5806–4]

National Oil and Hazardous Substances Pollution Contingency Plan; National Priorities List Update

AGENCY: Environmental Protection Agency.

ACTION: Notice of deletion of the Triangle Chemical Company Superfund Site from the National Priorities List.

SUMMARY: The Environmental Protection Agency (EPA) announces the deletion of the Triangle Chemical Company Site (Site) in Bridge City, Texas, from the National Priorities List (NPL). The NPL is Appendix B of 40 CFR part 300 which is the National Oil and Hazardous Substances Pollution Contingency Plan (NCP), which EPA promulgated pursuant to Section 105 of the Comprehensive Environmental Response, Compensation, and Liability Act of 1980, as amended (CERCLA). EPA and the State of Texas have determined that all appropriate Fund-financed responses under CERCLA have been implemented and that no further cleanup by responsible parties is appropriate. Moreover, EPA and the State of Texas have determined that remedial actions conducted at the Site to date have been protective of public health, welfare, and the environment.

EFFECTIVE DATE: May 8, 1997.

FOR FURTHER INFORMATION CONTACT: Ernest R. Franke, Remedial Project Manager, U.S. EPA, Region 6, 1445 Ross Avenue, Dallas, Texas 75202–2733, (214) 665–8521.

SUPPLEMENTARY INFORMATION: The site to be deleted from the NPL is the Triangle Chemical Company Site, Bridge City, Texas. A Notice of Intent to Delete for this site was published in the **Federal Register** on October 31, 1996 (61 FR 56197). The closing date for public comment was December 2, 1996. EPA received no comments during the comment period.

EPA identifies sites which appear to present a significant risk to public health, welfare, or the environment and maintains the NPL as a list of the most serious of those sites. Sites on the NPL may be the subject of remedial response actions financed using the Hazardous Substance Response Trust Fund (Fund). Any site deleted from the NPL remains eligible for Fund-financed remedial actions in the unlikely event that conditions at the site warrant such action. Section 300.425(e)(3) of the NCP provides that in the event of a significant release from a site deleted from the NPL the site shall be restored to the NPL without application of the Hazard Ranking System. Deletion of a site from the NPL does not affect responsible party liability or impede agency efforts to recover costs associated with response actions.

List of Subjects in 40 CFR Part 300

Environmental protection, Hazardous waste.

Dated: February 21, 1997.

Myron O. Knudson,

Acting Regional Administrator, U.S. Environmental Protection Agency, Region 6.

For the reasons set out in the preamble, 40 CFR part 300 is amended as follows:

PART 300—[AMENDED]

1. The authority citation for part 300 continues to read as follows:

Authority: 33 U.S.C. 1321(c)(2); 42 U.S.C. 9601–9657; E.O. 12777, 56 FR 54757, 3 CFR, 1991 Comp., 351; E.O. 12580; 52 FR 2923, 3 CFR, 1987 Comp., p. 193.

Appendix B—[Amended]

2. Table 1 of Appendix B to part 300 is amended by removing ''Triangle Chemical Co.'', the site for Bridge City, Texas.

[FR Doc. 97–8818 Filed 4–7–97; 8:45 am]

BILLING CODE 6560–50–P

DEPARTMENT OF TRANSPORTATION

Federal Highway Administration

49 CFR Parts 387, 390, and 395

RIN 2125–AE07

Minimum Levels of Financial Responsibility for Motor Carriers; Hours of Service of Drivers; Technical Amendments

AGENCY: Federal Highway Administration (FHWA), DOT.

ACTION: Final rule; technical amendments.

SUMMARY: This document amends the financial responsibility regulations to more broadly define the term *State,* and removes an unnecessary definition for the term *farm-to-market agricultural transportation* from the Federal Motor Carrier Safety Regulations (FMCSRs). This document also revises the hours of service of drivers regulations to clarify the requirement that a commercial motor vehicle (CMV) driver show either: the number assigned by the motor carrier, or the license number and licensing State of each CMV operated during a 24-hour period on his or her record of duty status.

DATES: Effective on April 8, 1997.

FOR FURTHER INFORMATION CONTACT: Mr. Peter C. Chandler, Office of Motor Carrier Research and Standards, (202) 366–5763, or Mr. Charles E. Medalen, Office of the Chief Counsel, (202) 366–1354, Federal Highway Administration, Department of Transportation, 400 Seventh Street, SW., Washington, DC 20590. Office hours are from 7:45 a.m. to 4:15 p.m., e.t., Monday through Friday, except Federal holidays.

SUPPLEMENTARY INFORMATION:

Background

The FHWA has identified technical amendments that are needed to add a broader definition for the term *State* to the financial responsibility regulations at § 387.5, and to remove an unnecessary definition for the term *farm-to-market agricultural transportation* from the FMCSRs at § 390.5. This document also clarifies the requirement that a CMV driver show either: (1) The number assigned by the motor carrier, or (2) the license and licensing State of each CMV operated during a 24-hour period on his or her record of duty status. The amendments are discussed below.

Definitions (section 387.5)

The financial responsibility regulations for motor carriers of property in subpart A of part 387, 49 CFR, implement section 30 of the Motor Carrier Act of 1980 (1980 Act) (Pub. L. 96–296, 94 Stat. 793, 820, codified at 49 U.S.C. 31139). Section 387.5 of 49 CFR does not include a definition for the term *State.* Unless specifically defined in subchapter B, chapter III, 49 CFR, the definitions set forth in § 390.5 are applicable to all parts (including subpart A of part 387) in subchapter B.

Section 390.5 defines the term *State* as ''a State of the United States and the District of Columbia and includes any political subdivision of a State.'' The term *State* is defined at 49 U.S.C. 31139(a)(3), however, as ''a State of the United States, the District of Columbia, Puerto Rico, the Virgin Islands, American Samoa, Guam, and the Northern Marianas.'' Thus, the regulatory definition for the term *State* at § 390.5 in the context of minimal levels of financial responsibility for motor carriers of property, is narrower

than the term's corresponding statutory definition at 49 U.S.C. 31139(a). The omission of a regulatory definition for the term *State* in subpart A of part 387 was an oversight by the FHWA and was not intended to set the jurisdictional parameter of the financial responsibility regulations for motor carriers of property at an extent less than the scope authorized by the 1980 Act. Accordingly, a definition for the term *State,* which is consistent with the term's statutory definition in the 1980 Act at 49 U.S.C. 31139(a)(3), is being added to § 387.5 in order to fulfill the FHWA's intention to establish the jurisdictional parameter of the financial responsibility regulations for motor carriers of property at the fullest extent authorized by the 1980 Act.

Definitions (section 390.5)

Section 390.5 includes a definition for the term *farm-to-market agricultural transportation,* but this term is no longer used at all in subchapter B of chapter III, 49 CFR. On February 2, 1993, the FHWA published a final rule in the **Federal Register** (58 FR 6726) which removed the accident notification and reporting requirements for motor carriers in part 394, 49 CFR, of the FMCSRs. The accidents that were required to be reported were specified in the definition of the term *reportable accident,* formerly at 49 CFR 394.3. Within paragraph (b)(3) of this definition, an occurrence in the course of farm-to-market agricultural transportation by a motor carrier was excluded as a reportable accident.

The term *farm-to-market agricultural transportation* was formerly defined in the FMCSRs at § 394.5. On May 19, 1988 (53 FR 18042), the definition for the term *farm-to-market agricultural transportation* was moved from § 394.5 to § 390.5. Upon the removal of the accident notification and reporting requirements from § 394.3, the definition for the term *farm-to-market agricultural transportation* in § 390.5 was not removed as appropriate. The FHWA, therefore, is amending § 390.5 by removing the definition for the term *farm-to-market agricultural transportation* because it is no longer necessary.

Driver's Record of Duty Status (§ 395.8)

The FHWA published a final rule, ''Zero Base Review of the Federal Motor Carrier Safety Regulations; Correcting Amendments,'' at 60 FR 38748, on July 28, 1995, which amended § 395.8(f)(5), 49 CFR. This section requires a driver to record certain information which identifies each CMV operated during a 24-hour period on his or her record of duty status. The amendment was intended to replace the term vehicle with the more appropriate term commercial motor vehicle and to clarify that the requirement applied to bus drivers, but the amendment included an error. Section 395.8(f)(5) was amended to require the recording of the number assigned by the motor carrier or State, and the license number of the CMV. The FHWA intended, however, to require a CMV driver to show either: (1) The number assigned by the motor carrier, or (2) the license number and licensing State of each CMV operated during a 24-hour period on his or her record of duty status. Accordingly, the FHWA is amending § 395.8(f)(5) to be consistent with the FHWA's intended requirement.

Rulemaking Analyses and Notices

This final rule makes only technical amendments to the Federal Motor Carrier Safety Regulations. The FHWA believes that prior notice and opportunity for comment are unnecessary because this rule merely clarifies current regulations without making any substantive change in those regulations. The FHWA, therefore, finds good cause to adopt this rule without prior notice or opportunity for public comment (5 U.S.C. 553(b)). The DOT's regulatory policies and procedures also authorize promulgation of the rule without prior notice because it is anticipated that such action would not result in the receipt of useful information. The FHWA is making the rule effective upon publication in the **Federal Register** because it imposes no new burdens and merely amends existing regulations (5 U.S.C. 553(d)).

Executive Order 12866 (Regulatory Planning and Review) and DOT Regulatory Policies and Procedures

The FHWA has determined that this action is not a significant regulatory action within the meaning of Executive Order 12866 or significant within the meaning of Department of Transportation regulatory policies and procedures. Since this rulemaking action makes only technical, clarifying changes to the current regulations, this rulemaking will not have an economic impact on the motor carrier industry; therefore, a full regulatory evaluation is not required.

Regulatory Flexibility Act

In compliance with the Regulatory Flexibility Act (Pub. L. 96–354, 5 U.S.C. 601–612), the FHWA has evaluated the effects of this rule on small entities. Based on the evaluation, and since this rulemaking action makes only technical, clarifying changes to the current regulations, the FHWA hereby certifies that this action will not have a significant economic impact on a substantial number of small entities.

Executive Order 12612 (Federalism Assessment)

This action has been analyzed in accordance with the principles and criteria contained in Executive Order 12612, and it has been determined that this action does not have sufficient federalism implications to warrant the preparation of a federalism assessment. The definition of State added by this rule merely clarifies existing regulations by incorporating the applicable statutory definition of State. No new burdens or restrictions are placed on States as a result of this rule.

Executive Order 12372 (Intergovernmental Review)

Catalog of Federal Domestic Assistance Program Number 20.217, Motor Carrier Safety. The regulations implementing Executive Order 12372 regarding intergovernmental consultation on Federal programs and activities do not apply to this program.

Paperwork Reduction Act

This action does not create any new collection of information requirement for purposes of the Paperwork Reduction Act of 1995, 44 U.S.C. 3501–3520.

National Environmental Policy Act

The agency has analyzed this action for the purpose of the National Environmental Policy Act of 1969 (42 U.S.C. 4321 *et seq.*) and has determined that this action would not have any effect on the quality of the environment.

Regulation Identification Number

A regulation identification number (RIN) is assigned to each regulatory action listed in the Unified Agenda of Federal Regulations. The Regulatory Information Service Center publishes the Unified Agenda in April and October of each year. The RIN contained in the heading of this document can be used to cross reference this action with the Unified Agenda.

List of Subjects in

49 CFR Part 387

Hazardous materials transportation, Highways and roads, Insurance, Motor carriers, Penalties, Reporting and recordkeeping requirements, Surety bonds.

49 CFR Part 390

Highways and roads, Motor carriers, Motor vehicle safety, Reporting and recordkeeping requirements.

49 CFR Part 395

Global positioning systems, Highways and roads, Intelligent transportation systems, Motor carriers—driver hours of service, Motor vehicle safety, Reporting and recordkeeping requirements.

Issued on: March 28, 1997.

Jane F. Garvey,

Acting Administrator, Federal Highway Administration.

In consideration of the foregoing, the FHWA amends title 49, Code of Federal Regulations, chapter III, as follows:

PART 387—[AMENDED]

1. The authority citation for part 387 is revised to read as follows:

Authority: 49 U.S.C. 13101, 13301, 13906, 14701, 31138, and 31139; and 49 CFR 1.48.

2. Section 387.5 is amended by adding the definition *State*, in alphabetical order, to read as follows:

§ 387.5 Definitions.

* * * * *

State means a State of the United States, the District of Columbia, Puerto Rico, the Virgin Islands, American Samoa, Guam, and the Northern Mariana Islands.

PART 390—[AMENDED]

3. The authority citation for part 390 continues to read as follows:

Authority: 49 U.S.C. 13301, 13902, 31132, 31133, 31136, 31502, 31504, and sec. 204, Pub. L. 104–88, 109 Stat. 803, 941; 49 U.S.C. 201 note, and 49 CFR 1.48.

§ 390.5 [Amended]

4. Section 390.5 is amended by removing the definition for *farm-to-market agricultural transportation.*

PART 395—[AMENDED]

5. The authority citation for part 395 continues to read as follows:

Authority: 49 U.S.C. 31133, 31136, and 31502; sec. 345, Pub. L. 104–59, 109 Stat. 568, 613; and 49 CFR 1.48.

6. Section 395.8 is amended by revising paragraph (f)(5) to read as follows:

§ 395.8 Driver's record of duty status.

* * * * *

(f) * * *

(5) *Commercial motor vehicle identification.* The driver shall show the number assigned by the motor carrier, or the license number and licensing State of each commercial motor vehicle operated during each 24-hour period on his/her record of duty status. The driver of an articulated (combination) commercial motor vehicle shall show the number assigned by the motor carrier, or the license number and licensing State of each motor vehicle used in each commercial motor vehicle combination operated during that 24-hour period on his/her record of duty status.

* * * * *

[FR Doc. 97–8924 Filed 4–7–97; 8:45 am]

BILLING CODE 4910–22–P

DEPARTMENT OF TRANSPORTATION

National Highway Traffic Safety Administration

49 CFR Part 571

[Docket No. 80–9; Notice 13]

RIN 2127–AF59

Federal Motor Vehicle Safety Standards; Lamps, Reflective Devices and Associated Equipment

AGENCY: National Highway Traffic Safety Administration (NHTSA), DOT.

ACTION: Response to petitions for reconsideration; final rule.

SUMMARY: This document responds to petitions for reconsideration of a final rule requiring that the rear of truck tractors be equipped with retroreflective material similar to that required on the rear of the trailers they tow to increase nighttime conspicuity.

DATES: The effective date for the final rule, as amended by this document, is July 1, 1997. Petitions for reconsideration of the rule must be received not later than 45 days after the rule is published in the **Federal Register**. Petitions filed after that time will be considered petitions for rulemaking pursuant to 49 CFR part 552.

ADDRESSES: Petitions for reconsideration of the amendments to the final rule should refer to the docket number and notice number, and be submitted to: Administrator, NHTSA, 400 Seventh Street, SW, Washington, DC 20590.

FOR FURTHER INFORMATION CONTACT: For Technical Issues: Patrick Boyd, Office of Safety Performance Standards, NPS–31, telephone (202) 366–6346, FAX (202) 366–4329. For Legal Issues: Taylor Vinson, Office of Chief Counsel, NCC–20, telephone (202) 366–2992, FAX (202) 366–3820.

SUPPLEMENTARY INFORMATION:

Background

On August 8, 1996, NHTSA published a final rule amending Federal Motor Vehicle Safety Standard No. 108 *Lamps, Reflective Devices, and Associated Equipment* to amend paragraph S5.7 *Conspicuity Systems.* (61 FR 41355). Effective July 1, 1997, the rule requires truck tractors to be equipped with a conspicuity treatment (either retroreflective tape or reflex reflectors) to enhance their detectability at night or under other conditions of reduced visibility.

The Final Rule

In view of the relatively short length of truck tractors and the fact that they are equipped with a full complement of lamps at the front, NHTSA adopted a conspicuity treatment for the rear only. The conspicuity treatment uses the same retroreflective sheeting or reflex reflectors certified for use on trailers (the term ''retroreflective material'' is used in this document to include both sheeting and reflex reflectors).

As with large trailers, two strips of white material 300 mm in length are to be applied horizontally and vertically to the right and left upper rear contours of the body (as shown in Figure 31), as close to the top of the body and as far apart as practicable. Relocation of the material is allowed to avoid obscuration by vehicle equipment when viewed from directly behind. If relocation is required for one side of the rear but not the other, the manufacturer is permitted to relocate the other strips to achieve a symmetrical effect. The final rule also permits the upper material to be obscured up to 25 percent when viewed directly from behind (the rear orthogonal view).

To indicate the overall width of the truck tractor, two strips of retroreflective material, 600 mm in length, of alternating colors of red and white, must be mounted on the rear, as horizontal as practicable and as far apart as practicable. This material may be applied to the rear fenders, if the tractor is so equipped, or to the mudflaps or mudflap support brackets. However, if the strips are located on the mudflaps, they must be placed not lower than 300 mm below the mudflap support bracket to avoid excessive movement. Since the tire diameter, and consequently the distance from the mudflap support to the road surface, is nominally 1 meter, the reflective strips can be expected to be about 700 mm above the road surface.

Under the final rule, manufacturers of truck tractors have the option of using

an array of reflex reflectors on the rear instead of retroreflective sheeting, the same option that is available to trailer manufacturers. However, reflex reflectors continue to be required by Table I of Standard No. 108, in addition to the conspicuity material, whether sheeting or reflectors. The agency did not amend paragraphs S5.1.1.1 and S5.1.1.2 of Standard No. 108 which excuse truck tractors from the full complement of rear lighting equipment required of trucks.

Petitions for reconsideration of the final rule were received from American Trucking Associations (ATA), and Truck Manufacturers Association (TMA).

(1) Truck Tractors Without Mudflaps

TMA and ATA contend that many truck tractors used to haul auto transporters, tank trailers, or trailers hauling construction equipment, are used as ''married pairs'' and always operate with the same trailer. In a married pair configuration, the mudflaps for the truck tractor drive axle could be mounted on the trailer. The petitioners state that these truck tractors would never be fitted with mudflaps, and consequently, there would be no location for installing the conspicuity material. They further state that the movement of the trailer in turns would cause interference between trailer-mounted mudflaps and any brackets mounted on the rear of the truck tractor to hold conspicuity material. ATA also points out that many states do not require mudflaps on truck tractors.

The 1996 edition of the *Official Trucking Safety Guide,* published by J.J. Keller & Associates, identifies 15 states and the District of Columbia as having no mudflap requirement for any truck and identifies six other states that exempt truck tractors. The publication also reports that Michigan exempts truck tractors from mudflap requirements if they are operated at no more than 25 mph without a trailer. However, it is incorrect to conclude from these statistics that a large proportion of truck tractors do not use mudflaps. The need to travel across the 29 states requiring mudflaps on tractors and the possible liability from not protecting vehicles behind from stone damage and spray are apparently sufficient reason for most truck tractor owners to use mudflaps regardless of local state law.

Delaware, Maryland, the District of Columbia, Virginia, West Virginia, North Carolina and South Carolina form a large contiguous region having no requirements for mudflaps on truck tractors. Nevertheless, the overwhelming majority of truck tractors observed by this agency in Virginia were equipped with mudflaps. Of the 1109 tractors observed on Interstate 95 in Virginia, 1003 had mudflaps and only 106 did not. Many of the tank trailers were equipped with mudflaps, consistent with the ''married pair'' combination described by the petitioners. However, of 49 tank trailers observed with forward mounted mudflaps, 37 were being towed by tractors which also had mudflaps, casting doubt on the generality of the petitioners' assertion that there is insufficient room between the trailer mounted mudflaps and the tractor tires for reflector brackets.

For regulatory purposes, it is not possible to distinguish a truck tractor that will be used in a married pair from other truck tractors. Likewise, the operators of fleets of trucks and trailers usually configured as married pairs cannot assure that breakdowns and other circumstances will not result in occasional travel of their truck tractors without trailers. Finally, the sale of the truck tractor to the second owner is unlikely to include the sale of the specialized trailer to which it was paired. Therefore, the conspicuity requirements should include provisions permitting alternative compliance of the minority of truck tractors that lack the favorable mounting locations of mudflap brackets and mudflaps.

The NPRM (60 FR 30820) originally proposing truck tractor conspicuity included the additional alternative of attaching the red/white retroreflective material to the back of the cab rather than to the mudflap brackets. The alternative was not included in the final rule because of opposition by ATA and TMA. ATA was opposed to material not located at the extreme rear of the cab, and TMA was concerned about interference with equipment. Clearly, the best attachment points for conspicuity material are the mudflap brackets which are part of most truck tractors. However, even material located forward of the usual mudflap location can accurately indicate the width of the truck tractor, mitigating difficulties in judging closing speed by drivers approaching the narrowly spaced tail lamps of truck tractors, which lack the clearance and identification lamps of other trucks. Retroreflective material attached to the back of the cab, to brackets supported by the cab, or to the frame ahead of the rear axle may be the only possible locations for conspicuity material for a small portion of truck tractors if the petitioners are correct about possible trailer interference problems. However, it appears likely that most tractors in married pairs, and certainly others that simply lack mudflaps, could support conspicuity material with brackets behind the rear axle that need not be as strong as those designed for mudflap loads.

A general solution for the approximately 10 percent of tractors that may not be equipped with mudflaps is to replace the 2-inch wide sheeting material mounted on an aluminum backing plate (assumed in the regulatory cost estimate of the final rule) with reflex reflectors mounted on a simple 1-inch wide bent steel bracket located behind the rear axle. The reflex reflectors are equivalent in cost to the sheeting material, but the steel brackets would cost more than the aluminum backing plates. While the final rule estimated the cost to a consumer of a pair of backing plates at $3.35, the estimated cost of a pair of reflector brackets is $5.39. If 10 percent of tractors required the more expensive brackets, the average consumer cost of the tractor conspicuity treatment would rise from $17.17 to $17.37.

However, the original treatment cost estimate was conservative in that it assumed that every tractor would need a pair of aluminum backing plates to adapt the reflective material to the mudflap brackets. NHTSA has observed that some common styles of mudflap brackets have surfaces to which conspicuity material could be attached directly without the need for extra backing plates. Assuming that only 6 percent of tractors were to use those types of brackets, the original estimate would still be the same as the average cost of a tractor conspicuity treatment. It is likely that the convenience of mounting conspicuity material directly on the mudflap bracket will increase the popularity of compatible styles of mudflap brackets and reduce the average cost of the conspicuity treatment. However, as discussed later, the cost effectiveness of the rule does not depend on minor factors because the conspicuity costs have been weighed favorably against mere property damage prevention without the need to assign economic benefit to the principal goal of preventing injury and death.

NHTSA is therefore adopting the alternative it originally proposed (for the red/white horizontal element of the conspicuity system) of cab-mounted material and adding the additional alternatives of material mounted ahead of or behind the rear axle on separate brackets. Since the agency agreed with commenters to the NPRM that material ahead of the rear axle is not as desirable as material behind the rear axle, the alternative locations ahead of the axle

will be limited to truck tractors which lack mudflaps. As permitted for upper material mounted on the back of the cab, the amendments permit the obscuration of up to 25 percent of lower material mounted on the back of the cab so that insignificant obstructions such as braces and hoses may be accommodated.

(2) Obscuration of Upper Rear Cab Material

TMA commented that the aftermarket installation of additional equipment such as header boards, add-on sleeper compartments, cranes and winches could partially or completely obscure the conspicuity treatment on the back of the cab provided by the truck tractor manufacturer. The need to apply auxiliary conspicuity material to equipment obscuring the original material would increase the cost of such modifications by the cost of the additional conspicuity material. TMA considers the potential burden unreasonable. The solution it suggests is that truck manufacturers not install the conspicuity material but rather furnish a small roll of reflective tape or some loose reflex reflectors with a new tractor. Presumably, no tractors would have factory-installed conspicuity material since TMA points out that manufacturers would not know prior to sale and delivery which tractors were to be modified.

Manufacturers certify compliance with Federal motor vehicle safety standards on the basis of equipment they install on the vehicle at the time of manufacture, not on the basis of equipment that a purchaser may or may not install after buying the vehicle. Thus, NHTSA sees no way that it can favorably consider TMA's comment. The potential burden is the use of 4 feet of reflective tape or four reflector bars with a retail value of about two or three dollars in the modification of a minority of vehicles in a class with a unit cost on the order of one hundred thousand dollars. The burden is much less than in the analogous case discussed in the final rule notice of the installation of caps on ordinary pick-up trucks. When the installation of a cap obscures the center high mounted stop lamp of a pick-up truck, the installer must provide an auxiliary stop lamp, which is much more burdensome than reflective tape, on the cap.

TMA's suggestion would also deprive the owners of unmodified trucks of their reasonable expectation that factory installed equipment is present, in compliance with Federal safety standards, as the vehicle's certification label states. Also, header boards and other equipment related to special trailers and cargos are likely to be removed before the sale of a tractor to a second owner who will benefit from factory-installed conspicuity material. Finally, the manufacturer is permitted to attach the material with screws or other means rather than adhesives to permit its installation on added header boards or sleeper compartments. The final rule already requires that approach when material is furnished on temporary mudflap brackets because there is a certainty of the purchaser's need to relocate the material.

ATA takes the obscuration objection further with its claim that obscuration of conspicuity material ''will make it impossible for the motor carrier industry to effectively utilize such equipment as tractor mounted cranes and winches.'' It also was concerned that ''the many differing mounting patterns, which manufacturers will have to use to meet the rule, will make it impossible for an inspector of in-service trucks to know whether a specific cab rear incorporates the same reflective material motif it had when it left the factory.'' It furnished photographs of a tractor with a header board and winch and of a tractor with a large cargo handling crane to illustrate its point.

ATA's concerns are unfounded. There is no requirement that auxiliary reflective material mounted on equipment which obscures OEM material be placed in exactly the same locations. The requirement is that the pairs of horizontal and vertical reflective strips be placed ''as horizontally and vertically as practicable'' and ''as close to the top of the body and as far apart as practicable.'' Although this is intended for marking the upper outer edges of the body, it gives the installer the discretion to use common sense to place the material in best available locations. It provides for the possibility that the practicable locations and orientation of the upper conspicuity material could be different depending on the equipment on or behind the cab. The inspectors of trucks in service are familiar with the provision for practicability in the placement of conspicuity material. Trailers have been inspected for conspicuity material under the same practicability provision for three years with little difficulty. Tankers, bulk material trailers and trailers with onboard grain handling equipment provide routine examples of practicability considerations.

ATA's photograph of a tractor with a large crane between the cab and the fifth wheel shows an unusual vehicle designed for unloading poles from its trailer. It is an extreme example of the influence of equipment on practicable locations for conspicuity material. A practicable location for the upper left material would be on the crane structure with the crane arm situated in the traveling position. The pieces of material could be at about cab height and angled less acutely than 90 degrees to one another. The material on the right side could be placed partly on the crane and partly on the cab or entirely on the cab at a lower height. In the other example, the winch would not appear to obscure locations where OEM material would be placed, but the header board would. The obvious location for conspicuity material would be corners of the header board. The utility even of unusual vehicles is not threatened by the rule.

(3) Need For More Research

ATA's petition asks that the effective date of July 1, 1997, be suspended for three years and that the agency perform research during that time to justify the need for the rule and to modify its requirements. It noted that ''most bob-tail tractor accidents take place during the day'' in support of its assertion that more research is needed, and it faulted the agency for lack of research on options for installing conspicuity material. ATA favors a requirement of reflective area alone, leaving the placement of this material entirely up to the manufacturer and consumer.

ATA is correct that only one third of the crashes in which a truck tractor is struck in the rear occur at night, but these crashes involve 60 percent of the fatalities and 41 percent of the injuries. This demonstrates that the night accidents are generally more serious. The agency considers the research on reflective conspicuity for trailers, which have a similar proportion of fatal collisions at night, as a sufficient basis for the tractor conspicuity rule. In fact, estimates of the safety effect of adding conspicuity material to tractors based on trailer research would be expected to be conservative because the required rear lighting of tractors is much inferior to that of trailers before the addition of the conspicuity material.

The agency disagrees with ATA's view that the position of the material is unimportant. The placement of conspicuity material according to the final rule addresses the particular deficiencies of the rear lighting of truck tractors and also replicates the reflective pattern of rear of trailers, now familiar to motorists. The rear lighting of truck tractors does not indicate either the width or the height of the vehicle as required for other trucks. Material at the

top of the mudflaps marks the tractor width at the rearmost position. The location was specifically recommended by most commenters, and no commenter suggested that any other position would be superior from the standpoint of safety. The amended final rule also permits all equivalent locations for material to mark the width of tractors in the small minority without mudflaps. The purpose of the other material is to mark the upper outer corners of the rear cab to complete a reasonable two dimensional image, but the placement on a particular vehicle is dictated by practicability rather than by rigid specification. There is no reasonable likelihood that the arrangement of reflective material in other patterns would be superior in improving safety or practicability, and a conspicuity requirement based only on the amount of material fails to address the distinctive aspects of truck tractor rear lighting. The agency finds no need for further research or a delay in the effective date of the rule. Therefore, ATA's petition for reconsideration is denied.

(4) Objections Regarding Costs and Benefits

ATA claims that the additional upper conspicuity material required when tractors are modified with added equipment such as header boards, material handling cranes, auto-hauling equipment and non-OEM sleeper compartments make the annual cost of the rule ''far higher'' than the estimated $3 million OEM customer cost. It also faulted the agency for having no evaluation of the practicability of installing conspicuity material on add-on equipment.

Standard No. 108 requires that the material in question be installed as close as practicable to the upper outer corners of the cab. Header boards and sleeper compartments tend to offer obvious favorable surfaces, and even the material handling crane, which seems to be a worst-case example, has usable surfaces. While it is doubtful that auto-hauling equipment offers serious impediments to the application of reflective material, it may be a moot point. Structures attached to the truck to support autos as cargo would disqualify it from classification as a tractor (defined in 49 CFR 571.3 as a truck constructed to carry only loads imposed by trailers), and it would be required to have the full complement of truck lighting rather than conspicuity material.

The cost of maintaining safety equipment during the modification of a vehicle is not routinely considered in cost effectiveness estimates of Federal standards requiring safety features as original equipment. However, the agency does not believe that the cost of adding $2 to $3 worth of reflective tape or adhesive backed reflectors to aftermarket header boards or sleeper compartments will result in a ''far higher'' cost. Neither petitioner informed the agency of the likely numbers of vehicles with add-on equipment blocking the original upper conspicuity material. The agency's observations suggest that possibly ten percent of tractors would be equipped with header boards or add-on sleepers and that the number of tractors with equipment like cranes is negligible. Based on an annual production of 170,000 tractors, the total additional conspicuity cost incurred in the modification of 10 percent of them would be about $50,000. The amount is insignificant compared with the estimated $2,919,000 consumer cost for original equipment conspicuity installation.

ATA states that peripheral costs such as extra conspicuity tape on added equipment will make the rule not cost effective, because the most highly discounted estimate of property damage savings in the regulatory analysis was $3,176,000 which is only slightly in excess of the consumer cost of $2,919,000. It disputes the value of potential life saving with the observation that the final rule preamble's statement that ''if fatalities involving rear collisions of truck tractors can be reduced by 15 to 25 percent annually, there will be 4 to 7 fewer deaths attributable to this type of accident'' has no more meaning than a declaration that if fatalities could be reduced by 100 percent, there would be 28 fewer fatalities.

The tractor conspicuity rule is very cost effective because its cost is met or exceeded by property damage saving alone. The prevention of deaths and injuries is obtained at no additional cost. It is much more favorable than most safety regulations which require a societal expenditure per life saved. The gross property damage savings over the life of vehicles produced in a single year was estimated at $4,849,000, and it was discounted to a present value of $4,399,000 to $3,176,000 for a range of discount rates from two percent to 10 percent. ATA cited the present value of the property damage benefits computed at a 10 percent discount rate ($3,176,000), but the present value of those benefits would be greater computed at a discount rate more consistent with current interest rates. For example, at a four percent discount rate, the present value of the property damage benefits would exceed $4,000,000.

However, the purpose of the rule is the prevention of deaths and injuries. The effect of conspicuity, as predicted by a fleet study of trailers, was a reduction of certain types of collisions by 15 to 25 percent and a substantial mitigation of many others. The truck fleets cooperating in the study insisted on the confidentiality of all records pertaining to deaths and injuries. Therefore, the effectiveness could be determined only in terms of collision prevention and property damage mitigation. The statement which elicited ATA's comment expressed an expectation of death and injury prevention consistent with collision prevention without the additional consideration of further benefit occurring in collisions of mitigated severity. This is a conservative expectation, particularly in view of reports by trucking companies of substantial reductions in fatal crashes following the use of conspicuity treatments of trailers (Traffic Safety, Vol. 95, No. 5, Sept/Oct 1995).

(5) Clarifications of Regulatory Language and Illustrations

The agency grants TMA's petition for reconsideration regarding certain clarifications to the final rule. These are discussed below.

(a) Conspicuity Material on Glazing

TMA points out that the preamble to the final rule, in discussing the upper cab contour marking, states that, ''* * * the material may be attached to the edge of the window itself if the window is so large as to occupy all the practicable space for an upper treatment.'' The final rule amending S5.3.1 established the potential for mounting conspicuity treatment on glazing and non-rigid surfaces. It states that ''Except as provided in * * * S5.7 * * * each lamp, reflective device, and item of associated equipment shall be securely mounted on a rigid part of the vehicle other than glazing that is not designed to be removed, * * *'' The final rule, however, never included the glazing exemption noted in the preamble. To rectify this oversight, TMA recommends that the following be added to the end of S5.7.1.4.3(b): ''If the rear window is so large as to occupy all the practicable space, the material may be attached to the edge of the window itself.''

ATA opposed the use of conspicuity material on the edge of the rear window citing the existence of state laws limiting the location and size of objects affixed to windows and suggesting that

the material would contribute to crashes.

This notice amends paragraph S5.7.1.4.3(b) in response to the TMA comment. The agency is not aware of any State regulations which would prohibit the application of conspicuity material to the rear windows of truck tractors. Because Standard No. 108 expressly permits conspicuity material to be applied to the rear windows of truck tractors if the rear window is so large as to occupy all the practicable space where it may otherwise be placed on the rear of the cab, any State regulation prohibiting would be preempted. Since tractors do not have inside rear view mirrors, the rear windows are of little use in driving. The agency anticipates that material would be placed only on very large windows that consume all other potential locations and continue to provide adequate direct visibility for docking with material (which may be as narrow as 1 inch with reflex reflectors) on the edge. It is likely that manufacturers will consider windows as a placement of last resort because of aesthetic considerations. However, they would be expected to use the windows before concluding that there were no practicable locations except those below the window and very far from the top of the cab. It should be noted, though, that a manufacturer using the edge of the window would be correct in determining that the practicable placements can depart from strict horizontal and vertical orientations if necessary to follow the window edge with the least intrusion on the viewing area.

(b) Discontinuous Surfaces

TMA points out that in S7.1.4 the agency has described discontinuous surfaces typical of *trailers,* but has not done so for truck tractors. This could be confused by inspectors in the field as meaning the exception does not apply to truck tractors. TMA therefore recommended that NHTSA add truck tractor specific examples to those already cited for trailers. Specifically, it asked that paragraph S5.7.1.4 be revised to allow the following:

''S5.7.1.4 Location. (a) Retroreflective sheeting * * * to discontinuous surfaces such as * * * lamp bodies on trailers and body joints, stiffening beads, drip rails, and rolled surfaces on truck tractors''.

The obvious good installation practices of cutting material to avoid obstructions and steps in the body and of the avoidance of curved surfaces which would inhibit the reflective properties of the material apply equally to trailers and truck tractors, and NHTSA is pleased to make the clarification requested.

(c) Location of Conspicuity Material on Mudflaps

Paragraph S5.7.1.4.3(a), Rear of Truck Tractors, states ''* * * Strips on mudflaps shall be mounted not lower than 300 mm below the *lower edge* of the mudflap support bracket.'' (emphasis supplied). According to TMA, the agency never defined what constitutes the ''lower edge.'' Further, the preamble states that ''* * * The rule allows it to be applied as low as 300 mm *below the top of the mudflap*,'' which appears to be in conflict with what is stated in the final rule. TMA recommends that the agency clear up this potential area of confusion by specifying in S5.7.1.4.3 (a) that ''Strips on mudflaps should be located within 300 mm of the lower horizontal edge of the mudflap bracket.'' Because of the variations in mudflap support brackets, a separate figure is recommended to fully define the lower horizontal edge.

The apparent conflict pointed out by TMA is not the only reason to revise the language regarding reflective material on mudflaps. It was not wise to use the mudflap bracket as a reference position. The fact that some brackets are bent down at the outer edge makes the ''lower edge of the bracket'' an ambiguous term. Also, manufacturers of mudflaps who may want to apply conspicuity material do not necessarily know the exact shape of the brackets their customers may use. Simply referencing the position of the conspicuity material to the horizontal upper edge of the mudflap itself removes the ambiguity to all parties without the need for more figures added to Standard No. 108. The relevant sentence in S5.7.1.4.3 (a) is revised to ''* * * Strips on mudflaps shall be mounted not lower than 300 mm below the upper horizontal edge of the mudflap.''

(d) Additional Figures

TMA is concerned about the ''overwhelming challenge'' that federal and state inspectors will face in determining compliance because of the extremely wide range of possible treatments/locations that will fully meet the requirements of the rule. To minimize the potential problems, it recommended that the agency add several additional figures to Standard No. 108 as NHTSA did in the case of trailers. The current line drawing shows a relatively uncluttered example of the back of a truck tractor. It argued that additional examples are needed: ''For example, Figure 30–1 Trailer Conspicuity example, illustrates the 'broken inverted L' treatment for a door hinge. Since NHTSA states in the preamble that the same would apply to truck tractors, it would be appropriate to have an illustration of the rear of a truck tractor, perhaps with and without an aerodynamic roof fairing, to show that the 'broken inverted L' applies also to truck tractors.'' It also recommended that a figure be added ''to show the 300 mm white/300 mm red as well as a 150 mm white/300 mm red/150 mm white treatment on mudflap brackets/mudflaps.''

Figure 31 is being revised based on line drawings of fully equipped tractors supplied by TMA. The agency believes a single drawing with insets is sufficient to illustrate the range of issues in the TMA petition. A truck with a roof fairing was chosen to clarify that the addition of a roof fairing does not change the cab contour contemplated by the standard. However, the fairing attachment brackets on the illustrated vehicle cause practicability problems for the simple white ''inverted L'' upper pattern and create the need for the ''broken inverted L'' pattern that TMA requested in an example. The example also shows that the material has been placed to avoid a drip rail and a rolled surface above the horizontal strips, and a small permitted obstruction is shown behind the left vertical strip. Red/white material on a mounting plate attached to a mudflap bracket is shown in several variations. Treatments with both two color segments and three color segments are illustrated with straight mudflap brackets, and a typical OEM installation of an angled mudflap bracket is illustrated.

Rulemaking Analyses and Notices

Executive Order 12866 and DOT Regulatory Policies and Procedures

In asking that the final rule be delayed 36 months, ATA commented that the final rule ''will have a significant impact on equipment and trucking operations which are being safely used today'', and that it ''is likely to make it impossible to use such things as tractor mounted winches and cranes.'' In view of this, ATA did not see how the following articles in Executive Order 12866 can be considered to be met:

(5) When an agency determines that a regulation is the best available method of achieving the regulatory objective, it shall design its regulations in the most cost-effective manner to achieve the regulatory objective. In doing so, each agency shall consider incentives for innovation, consistency, predictability,

the costs of enforcement and compliance (to the government, regulated entities, and the public), flexibility, distributive impacts, and equity.

Comment: As noted in the final rule, NHTSA has not reviewed this rulemaking action under E.O. 12866, but it considers that the actions it has taken are consistent with the Executive Order. Further, ATA's comments lack specificity. The agency believes that it has adopted the most cost effective manner (retroreflective tape rather than a system of marker lamps) to address the safety problem.

(6) Each agency shall assess both the costs and the benefits of the intended regulation and, recognizing that some costs and benefits are difficult to quantify, propose or adopt a regulation only upon a reasoned determination that the benefits of the intended regulation justify its costs.

Comment: The agency has done so.

(7) Each agency shall base its decisions on the best reasonably obtainable scientific, technical, economic, and other information concerning the need for, and consequences of, the intended regulation.

Comment: The agency has done so.

(8) Each agency shall identify and assess alternative forms of regulation and shall, to the extent feasible, specify performance objectives, rather than specifying the behavior or manner of compliance that regulated entities must adopt.

Comment: The agency has specified performance objectives, to be met through the use of retroreflective tape or reflectors, in a pattern intended to provide immediate recognition to observers of a large truck tractor.

(11) The agency shall tailor its regulations to impose the least burden on society, including individuals, businesses of differing sizes, and other entities (including small communities and governmental entities), consistent with obtaining the regulatory objectives, taking into account, among other things, and to the extent practicable, the costs of cumulative regulations.

Comment: The agency has done so by adopting a regulation whose cost of compliance on a per vehicle basis is minimal, involving the installation of retroreflective tape or reflectors.

ATA justifies its request for a delay ''while it completes the research necessary to both define the problem and show proven solutions which do not eliminate certain safe and reasonable equipment and operations.'' ATA's request is denied. The agency has adequately identified the problem and provided for its solution, without eliminating ''certain safe and reasonable equipment and operations.''

This action has not been reviewed under Executive Order 12866. It has been determined that the rulemaking action is not significant under Department of Transportation regulatory policies and procedures. Implementation of the rule would not have a yearly cost impact that exceeds $2,919,000 in the aggregate. The agency has prepared a final regulatory evaluation dated July 1996, which has been placed in the docket.

National Environmental Policy Act

NHTSA has analyzed this rulemaking action for the purposes of the National Environmental Policy Act. It is not anticipated that the final rule will have a significant effect upon the environment. Compliance would require the application of not more than 8 feet of retroreflective tape to the rear of a truck tractor (1,360,000 feet for an estimated year's production of 170,000 truck tractors), retroreflective material is currently in use with no known negative environmental effects.

Regulatory Flexibility Act

The agency has also considered the impacts of this rulemaking action in relation to the Regulatory Flexibility Act. I certify that this rulemaking action will not have a significant economic impact upon a substantial number of small entities. Accordingly, no regulatory flexibility analysis has been prepared. Manufacturers of truck tractors, those affected by the rulemaking action, are generally not small businesses within the meaning of the Regulatory Flexibility Act. Further, small organizations and governmental jurisdictions will not be significantly affected because the price of new truck tractors will be only minimally increased. An increase in cost of about $17 per vehicle is expected to be more than offset by savings in repair to it over its life.

Executive Order 12612 (Federalism)

This rulemaking action has also been analyzed in accordance with the principles and criteria contained in Executive Order 12612, and NHTSA has determined that this rulemaking action does not have sufficient federalism implications to warrant the preparation of a Federalism Assessment.

Civil Justice

The final rule will not have any retroactive effect. Under 49 U.S.C. 30103, whenever a Federal motor vehicle safety standard is in effect, a state may not adopt or maintain a safety standard applicable to the same aspect of performance which is not identical to the Federal standard. See discussion under paragraph 5a of this notice regarding Federal preemption allowing use of conspicuity material applied to truck tractor rear windows. Sec. 30103 sets forth a procedure for judicial review of final rules establishing, amending or revoking Federal motor vehicle safety standards. That section does not require submission of a petition for reconsideration or other administrative proceedings before parties may file suit in court.

List of Subjects in 49 CFR Part 571

Imports, Motor vehicle safety, Motor vehicles.

PART 571—FEDERAL MOTOR VEHICLE SAFETY STANDARDS

In consideration of the foregoing, 49 CFR part 571 is amended as follows:

1. The authority citation for part 571 continues to read as follows:

Authority: 49 U.S.C. 322, 30111, 30115, 30162; delegation of authority at 49 CFR 1.50.

§ 571.108 [Amended]

2. Section 571.108 is amended by revising paragraphs S5.7.1.4(a), and S5.7.1.4.3 (a) and (b) and Figure 31 added at 61 FR 41360, Aug. 8, 1996, effective 7–1–97, to read as follows:

§ 571.108 Motor Vehicle Safety Standard No. 108 Lamps, Reflective Devices, and Associated Equipment.

* * * * *

S5.7.1.4 *Location.* (a) Retroreflective sheeting shall be applied to each trailer and truck tractor as specified below, but need not be applied to discontinuous surfaces such as outside ribs, stake post pickets on platform trailers, and external protruding beams, or to items of equipment such as door hinges and lamp bodies on trailers and body joints, stiffening beads, drip rails and rolled surfaces on truck tractors.

* * * * *

S5.7.1.4.3 *Rear of truck tractors.* Retroreflective sheeting shall be applied to the rear of each truck tractor as follows:

(a) Element 1: Two strips of sheeting in alternating colors, each not less than 600 mm long, located as close as practicable to the edges of the rear fenders, mudflaps, or the mudflap support brackets, to mark the width of the truck tractor. The strips shall be mounted as horizontal as practicable, in a vertical plane facing the rear, on the rear fenders, on the mudflap support brackets, on plates attached to the mudflap support brackets, or on the

mudflaps. Strips on mudflaps shall be mounted not lower than 300 mm below the upper horizontal edge of the mudflap. If the vehicle is certified with temporary mudflap support brackets, the strips shall be mounted on the mudflaps or on plates transferable to permanent mudflap support brackets. For a truck tractor without mudflaps, the strips may be mounted outboard of the frame on brackets behind the rear axle or on brackets ahead of the rear axle and above the top of the tires at unladen vehicle height, or they may be mounted directly or indirectly to the back of the cab as close to the outer edges as practicable, above the top of the tires, and not more than 1525 mm above the road surface at unladen vehicle height. If the strips are mounted on the back of the cab, no more than 25 percent of their cumulative area may be obscured by vehicle equipment as determined in a rear orthogonal view.

(b) Element 2: Two pairs of white strips of sheeting, each pair consisting of strips 300 mm long, applied as horizontally and vertically as practicable, to the right and left upper contours of the cab, as close to the top of the cab and as far apart as practicable. No more than 25 percent of their cumulative area may be obscured by vehicle equipment as determined in a rear orthogonal view. If one pair must be relocated to avoid obscuration by vehicle equipment, the other pair may be relocated in order to be mounted symmetrically. If the rear window is so large as to occupy all the practicable space, the material may be attached to the edge of the window itself.

* * * * *

BILLING CODE 4910–59–P

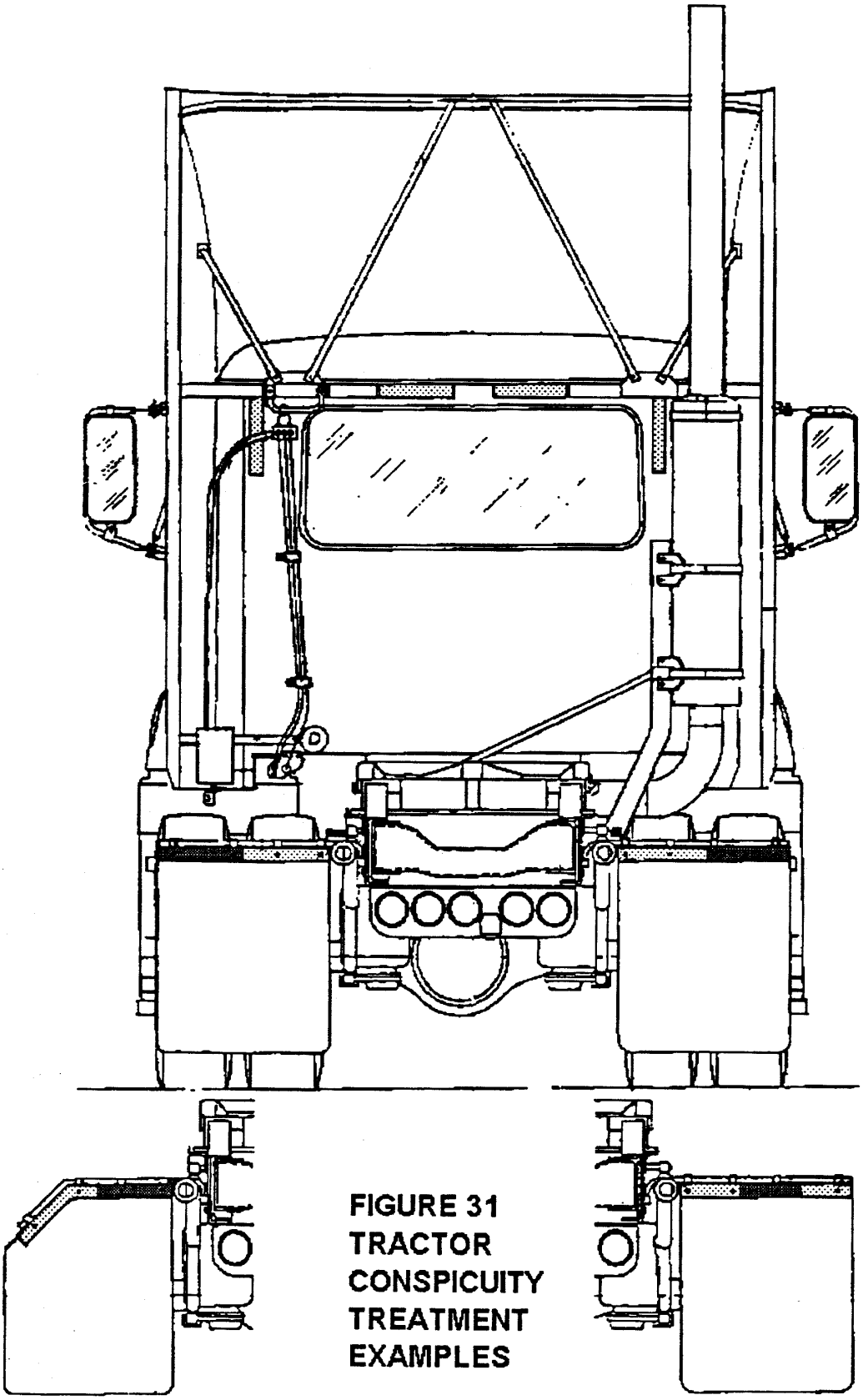

FIGURE 31
TRACTOR
CONSPICUITY
TREATMENT
EXAMPLES

Issued on March 27, 1997.

Ricardo Martinez,

Administrator.

[FR Doc. 97–8521 Filed 4–7–97; 8:45 am]

BILLING CODE 4910–59–C

DEPARTMENT OF TRANSPORTATION

National Highway Traffic Safety Administration

49 CFR Parts 571 and 589

[Docket No. 92–28; Notice 7]

RIN No. 2127-AB85

Federal Motor Vehicle Safety Standards; Head Impact Protection

AGENCY: National Highway Traffic Safety Administration (NHTSA), DOT.

ACTION: Final rule; Response to petitions for reconsideration.

SUMMARY: On August 18, 1995, NHTSA published a final rule amending Standard No. 201, ''Occupant Protection in Interior Impact,'' to require passenger cars and trucks, buses, and multipurpose passenger vehicles with a gross vehicle weight rating (GVWR) of 10,000 pounds or less, to provide protection when an occupant's head strikes upper interior components, including pillars, side rails, headers, and the roof, during a crash. In response to petitions for reconsideration, NHTSA is amending that final rule to include another phase-in option, allow manufacturers to carry forward credits for vehicles certified to the new requirements prior to the beginning of the phase-in period, exclude buses with a GVWR of more than 8,500 pounds, specify that all attachments to the upper interior components are to remain in place during compliance testing, and make other changes to the test procedure to clarify some areas of confusion.

DATES: *Effective Date:* The amendments made in this rule are effective May 8, 1997.

Petition Date: Any petitions for reconsideration must be received by NHTSA no later than May 23, 1997.

ADDRESSES: Any petitions for reconsideration should refer to the docket and notice number of this notice and be submitted to: Administrator, National Highway Traffic Safety Administration, 400 Seventh Street, SW, Washington, DC 20590.

FOR FURTHER INFORMATION CONTACT: The following persons at the National Highway Traffic Safety Administration, 400 Seventh Street, SW, Washington, DC 20590:

For non-legal issues:

Dr. William Fan, Office of Crashworthiness, NPS–11, telephone (202) 366–4922, facsimile (202) 366–4329, electronic mail ''bfan@nhtsa.dot.gov''.

For legal issues:

Steve Wood, Office of the Chief Counsel, NCC–20, telephone (202) 366–2992, facsimile (202) 366–3820, electronic mail ''swood@nhtsa.dot.gov''.

SUPPLEMENTARY INFORMATION:

Table of Contents

I. Background
II. FMH Drop Test Calibration Corridor
III. Lead time/Credits
A. Lead time
B. Credits
IV. Exclusion of Certain Vehicles
A. School Buses
B. Police Vehicles
V. Test Procedure
A. Definitions
1. Convertibles
2. Pillars
3. Windshield Trim/Surface of the Vehicle Ceiling
B. Test Conditions
1. Targeting Conditions
2. Removal of Attachments on Vehicle Interior Surface
3. Securing Vehicle That is Not Resting on Its Suspension
4. Removal of Windows
5. Rear Doors
6. Sun Visors
7. Location of Head Center of Gravity
8. Initial Contact
9. Approach Angles
10. Minimum Impact Distance
C. Targets
1. Issues Related to Multiple Targets
2. A-pillar Targets
3. B-Pillar Targets
4. Other Pillar Targets
5. Front Header Targets
6. Side Rail Targets
7. Upper Roof Targets
8. Sliding Door Track Targets
9. Roll-bar Targets
VI. Rulemaking Analysis and Notices.
A. Executive Order 12866 and DOT Regulatory Policies and Procedures.
B. Regulatory Flexibility Act.
C. Paperwork Reduction Act.
D. National Environmental Policy Act.
E. Executive Order 12612 (Federalism).
F. Civil Justice Reform.

I. Background

On August 18, 1995, the National Highway Traffic Safety Administration (NHTSA) published a final rule amending Standard No. 201, ''Occupant Protection in Interior Impact,'' to require passenger cars and trucks, buses, and multipurpose passenger vehicles (these vehicles are collectively referred to as LTVs) with a gross vehicle weight rating (GVWR) of 10,000 pounds or less, to provide protection when an occupant's head strikes upper interior components, including pillars, side rails, headers, and the roof, during a crash (60 FR 43031). The amendments added performance requirements and test procedures for a new in-vehicle component test. The new requirements will be phased-in over a four-year period beginning September 1, 1998.

The agency received nine timely petitions for reconsideration of the final rule. The issues raised by the petitions can be divided into five categories—(1) Application of the new requirements to dynamic (i.e., crash-deployed) head protection systems, (2) variability of test results attributed to width of the free motion headform (FMH) drop test calibration corridor, (3) lead time and phase-in, (4) exclusion of certain vehicles, and (5) test procedures.

The first category of issues is outside the scope of the rulemaking that led to the August 1995 final rule and thus is not a proper subject for a petition for reconsideration. Therefore, the agency announced that it was treating the requests concerning these issues as petitions for rulemaking, and granted those petitions. On March 7, 1996, the agency published an advance notice of proposed rulemaking to assist the agency in assessing those issues (61 FR 9136). Further agency action on those issues will be taken in the context of that separate rulemaking proceeding. Therefore, those issues will not be addressed in this notice.

II. FMH Drop Test Calibration Corridor

The American Automobile Manufacturers Association (AAMA) attached a copy of SAE Paper #950882, ''Influence of System Variables in Interior Head Impact Testing,'' to its original petition for reconsideration. The paper discusses the percentage of test variability attributable to various factors in the agency's new test procedure. Citing this paper, AAMA requested that the drop test calibration corridor for the free motion headform (FMH) be reduced since it was said to account for 26 percent of the variability. The current corridor is 225 to 275 g's. AAMA suggested that the width of the corridor be reduced from 50 g's to no more than 25 g's (250 to 275 g's). This issue was also raised by Honda in one of its comments.

NHTSA assumes that the analysis of the SAE paper #950882 is appropriate and the conclusions are accurate. The SAE paper shows a Head Injury Criterion (HIC) range from 2,095 to 1,611 for the 27 FMH tests discussed. This HIC range indicates a potential variability of 30 percent. Of this, eight percent, ± four percent, is attributed to variability in FMH calibration. The agency disagrees with AAMA that this is excessive, as dummy response variability of ± five percent is generally considered ''excellent.''

There are additional reasons for not adopting the requested change to the

corridor. Neither AAMA nor Honda submitted any data to substantiate their comments that a 25 g calibration corridor width would be practicable. Further, the agency notes that manufacturers can chose to use a FMH at the upper end of the calibration corridor when testing their own vehicles. By choosing this worst-case scenario, manufacturers could be assured their vehicles would comply when tested by the agency, regardless of the location of the agency's FMH within the calibration corridor. Therefore, the agency is not amending the calibration corridor for the FMH.

III. Lead Time/Credits

A. Lead Time

The final rule specifies three phase-in schedules, the earliest of which begins with vehicles manufactured on or after September 1, 1998. The Center for Auto Safety (CAS) submitted a petition asking that the phase-in schedules begin on September 1, 1997. AAMA and Volkswagen submitted petitions asking that the beginning of the phase-in schedules be delayed until September 1, 1999. Toyota asked the agency to delay the beginning of the phase-in schedules to compensate for the time needed to clarify the test procedure in the final rule.

With regard to the CAS petition, the agency is not reducing the lead time prior to the beginning of the phase-in schedules. In the final rule, the agency noted that manufacturers had uniformly commented that a lead time period longer than that proposed (approximately 2 years) and a phase-in schedule were necessary. Manufacturer estimates of the time needed prior to the beginning of a phase-in schedule ranged from three to five years. After reviewing these comments, NHTSA decided to begin the phase-in schedules slightly more than three years after the publication of the final rule. This period of lead time was at the lower end of the range of manufacturer lead time requests. NHTSA noted that its analysis showed that all but one existing vehicle model would need some degree of redesign to comply with the new requirements. CAS disagreed with this assessment. However, even after a post-petition request by the agency, CAS did not provide any information identifying additional vehicle models that do not need to be redesigned. In addition, the NHTSA decision on lead time was based on its conclusion that padding alone might not be sufficient for some components, that other countermeasures might be preferable (i.e., to prevent reduction in visibility), and that additional lead time was necessary to implement these other countermeasures. CAS did not dispute these conclusions.

NHTSA is also not increasing the lead time prior to the beginning of the phase-in schedules. NHTSA regulations clearly state that the filing of a petition for reconsideration does not delay the effective date of the rule (49 CFR 553.35(d)). Therefore, manufacturers should have been preparing for the beginning of the phase-in since August of 1995. While NHTSA has made some changes to the final rule, they are not so extensive that manufacturers should have to redesign vehicles again. Further, if the manufacturers' contemplated method of compliance is, as it should be, the uniform application of energy absorbing materials over the entire upper interior of their vehicles, the decisions by the agency in this notice regarding the specific location of particular target points should have relatively limited implications for the manufacturers' compliance efforts. Finally, the agency's adoption of another alternative phase-in option will provide some flexibility (see the next section).

B. Credits

In the final rule, NHTSA allowed manufacturers to earn carry-forward credit during the phase-in for producing complying vehicles in excess of the percentage of production required in the earlier years of the phase-in. In its petition, Ford stated that it would have trouble meeting the 10 percent requirement during the first year of the phase-in, and asked that a carry-back allowance of up to three percent be allowed for that year. In its petition, Honda asked that manufacturers be allowed to earn carry-forward credits for vehicles which are produced prior to the beginning of the phase-in period and which comply with the new requirements.

In allowing the earning and carrying-forward of credits during the phase-in, NHTSA stated:

> this will encourage manufacturers to exceed the requirements in early years, by concentrating initial efforts on either vehicles which present fewer redesign problems or high volume vehicles. This will benefit consumers by accelerating the availability of vehicles which comply with the new requirements and will benefit manufacturers by providing them with flexibility for the later years of the phase-in.

NHTSA believes this rationale is equally applicable to vehicles manufactured prior to the phase-in. Standard No. 208, ''Occupant Crash Protection,'' encouraged early installation of automatic protection systems by allowing the earning of carry-forward credits for passenger cars that complied with the automatic protection requirement and were produced in the year prior to the beginning of the phase-in. Such credits were not allowed for the phase-in of the dynamic testing requirement in Standard No. 214, ''Side Impact Protection,'' because of the high percentage of vehicles that did not need to be redesigned in order to comply. As stated previously, NHTSA was aware of only one production vehicle at the time of the final rule which would not require some redesign to comply with the new upper interior head protection requirements, and no additional information has been received to indicate that this assessment was incorrect. Therefore, NHTSA has decided to allow carry-forward credits for vehicles certified to the new requirement prior to the beginning of the phase-in. To accomplish this, NHTSA has amended the regulatory language to allow manufacturers the option of certifying to the new requirements prior to September 1, 1998.[1]

NHTSA did not specifically address carry-back credits in the preamble to the final rule. While Ford did submit confidential information to support its assertion that it could not achieve 10 percent compliance in the first year of the phase-in, the agency does not believe that carry-back credits would be appropriate as such credits would delay the introduction of complying vehicles. Instead, the agency has decided to add another phase-in option for all manufacturers. Under this option, manufacturers could certify compliance with seven percent of their vehicle fleet in the first year, 31 percent the second year, 40 percent the third year, 70 percent the fourth year, and 100 percent the final year. The figure for the first year is based on Ford's indication that its shortfall would be up to three percent in that year. While this schedule will result in fewer vehicles in the first year, it will require a greater number of vehicles to comply in the second year. The cumulative number of vehicles produced in compliance with the new requirements in the first two years of this phase-in will be greater than under the original 10/25/40/70/100 phase-in.

[1] This change in the regulatory language required a change in the numbering of all subsequent sections. To aid the reader, the preamble refers to the previous section number, and includes the new section number, where appropriate in parentheses.

IV. Exclusion of Certain Vehicles

A. School Buses

Three school bus manufacturers petitioned NHTSA to exclude school buses from the final rule. The manufacturers indicated that the final rule did not address a number of issues associated with school buses, including:

(1) Differences in implementation cost for small school buses,

(2) Inappropriateness of many target location procedures for small school buses,

(3) Negative economic impact on school bus manufacturers, many of which are small businesses, and,

(4) Lack of technical expertise and engineering support.

In reviewing these petitions, NHTSA contacted the petitioning manufacturers and the National Truck Equipment Association (NTEA) to obtain additional information on buses, including school buses, with a GVWR of 10,000 pounds or less.

All small school buses currently in production have a GVWR of more than 8,500 pounds. There were approximately 6,566 small school buses manufactured annually in 1993 and 1995. Of these, approximately 5,000 were Type-A buses (a school bus body on a van chassis), the remaining were van conversions. In the same years, 1,800 to 2,000 small (non-school) buses with a GVWR of more than 8,500 pounds and less than or equal to 10,000 pounds were produced, respectively. Finally, approximately 40,000 to 60,000 vans with a GVWR of more than 8,500 pounds and less than or equal to 10,000 pounds (these vehicles are classified as buses by NHTSA because of their passenger carrying capacity) are produced annually. Thus, the total number of small buses (buses with a GVWR of less than or equal to 10,000 pounds) produced annually is approximately 48,000 to 69,000.

Examination of fatality statistics shows that approximately 28 fatalities occur annually in buses with a GVWR of more than 8,500 pounds and less than or equal to 10,000 pounds. This figure represents occupant fatalities from all causes, not just those associated with impacts with upper interior components. In the Final Economic Assessment (FEA) for the final rule, NHTSA estimated that improvements to LTVs of all types and sizes would produce a fatality reduction of 289 to 334. Based on the assumption that the fatality reduction would be evenly distributed among the various types and sizes of LTVs, the reduction for buses with a GVWR of more than 8,500 pounds and less than 10,000 pounds would be very small. Given the ratio of the total annual production of LTVs (5,600,000 units in 1995) to the total annual production of small buses (48,000 to 69,000 units), the estimated fatality reduction for those buses would be one.

The FEA also indicates that the cost of compliance for vans is $72.29. The National Association of State Directors of Pupil Transportation Services indicated in a submission to Docket 95–98, Notice 1, that the cost of compliance for all small school buses would be $1,000 to $2,000. However, NHTSA developed a cost estimate of $507 to $926 per small school bus. NHTSA assumes the same cost for all small buses. Using these estimates for the appropriate numbers of small buses with a GVWR of more than 8,500 pounds results in an estimated cost of approximately $7 million.

Many vans which are classified as ''buses'' and vans which are classified as ''mpvs'' are manufactured using the same chassis and vehicle body construction. Since all vans below 8,500 pounds GVWR must comply with these requirements, it is expected that the manufacturers will provide complying interiors for all their vans. Thus, it is likely that some of the ''buses'' in the 8,500 to 10,000 pound GVWR range will have padded interiors despite an exclusion. Therefore, the actual benefit for buses in this weight range is much smaller than one life saved per year.

The school buses in this weight range already have to comply with a number of regulations in addition to the regulations for buses. Because school buses are more costly than regular buses, some schools use vehicles which are not ''school buses'' to transport children, or would not replace their old buses. These vehicles would not have the additional safety features of a ''school bus.'' NHTSA is increasingly concerned that requiring these vehicles to absorb a large additional cost with little benefits would cause more schools to delay purchase of new vehicles or to use non-school buses. This would result in a loss of benefits in other areas that would offset the extremely small benefits of this rule.

Finally, all of the multistage buses in this class are produced by small businesses. This increases NHTSA's concerns about the large costs of this rule for this class of vehicles.

Therefore, NHTSA has decided to exclude buses with a GVWR of more than 8,500 pounds from the new requirements. This will have minimal impact on the benefits estimate in the final rule. However, requiring these vehicles to comply would have a significant impact on this portion of the industry.

Police Vehicles

In a supplement to its petition for reconsideration, AAMA asked the agency to exclude police vehicles from the final rule. AAMA stated that police vehicles require special modifications for the installation of interior lighting, A-pillar-mounted spotlights, and roof-mounted beacons and sirens, and that such equipment would be difficult to redesign for compliance.

NHTSA is not excluding police vehicles in the final rule. NHTSA believes that many of the concerns underlying AAMA's request for exclusion are similar to concerns regarding attachments generally. Because of this, these concerns should be addressed by NHTSA's treatment of all attachments (see below). AAMA did not present evidence to indicate that police equipment required different treatment from other attachments.

V. Test Procedure

The fifth category of issues (test procedure) generated a large number of questions. In the final rule, the agency responded to comments objecting to the proposed broad requirements for universal compliance of the upper interior vehicle surface by narrowing the amendments to require compliance at specific targets only. To accommodate that change, however, the agency had to adopt a complex new test procedure to define and locate the targets on the vehicle interior. Because manufacturers had not seen the test procedure prior to the final rule, there were a large number of questions and concerns regarding the test procedure. To enable interested parties and NHTSA personnel to discuss the questions concerning the test procedure, and to aid petitioning parties in narrowing and refining those questions, NHTSA decided to hold a technical workshop on the test procedure.

The focus was on the location of target points. Interested parties were invited to submit questions in writing prior to the workshop (60 FR 53280; October, 13, 1995). The workshop was held on December 13–14, 1995 at the Vehicle Research and Test Center (VRTC) in East Liberty, Ohio. The workshop was attended by about 55 individuals representing the automobile and school bus manufacturers as well as automotive compliance test facilities. The procedures used to locate 12–15 headform impact target points were discussed relative to each of three demonstration vehicles: (1) A 1996 Ford Mustang GT (convertible), (2) a 1996

Saab 900 (4 door sedan with sun roof), and (3) a 1987 Nissan Van. Participants at the meeting were invited to supplement their petitions for reconsideration with discussions of any remaining target location issues. Both the submissions regarding workshop content and post-workshop supplements to the petitions are available in the docket. The specific questions and concerns raised in the petitions and at the workshop are addressed in this section. The section is arranged to parallel the regulatory text of the final rule. Because the same concerns and/or questions were raised by numerous parties, they are not attributed to any specific party.

A. Definitions

1. Convertibles

Manufacturers asked for changes to the definitions of ''convertible roof frame'' and ''convertible roof linkage mechanism.'' Manufacturers stated that the first definition presumes a metal frame for convertible roofs and that manufacturers are beginning to use other materials. Some manufacturers also asked the agency to exclude the entire convertible roof, while one manufacturer stated that hard top convertible roofs should be included. Finally, manufacturers asked for clarification of the particular components of a convertible that were excluded from the final rule, in particular, whether only components on the roof itself were excluded.

NHTSA agrees that the inclusion of the word ''metal'' in the definition of ''convertible roof frame'' is design restrictive and is removing that word from the definition.

NHTSA is not excluding the entire convertible roof. This issue was addressed in the final rule. In the final rule, NHTSA agreed to exclude ''convertible roof frames and linkage mechanisms because the presence of a countermeasure such as padding would interfere with their movement'' (60 FR 43031, at 43047). NHTSA did not exclude all targets on convertible roofs because commenters did not provide any justification suggesting that countermeasures could not be installed on other parts of the convertible roof. NHTSA notes that, while some convertible roofs are made of cloth or other soft material, many are not. While the former are unlikely to produce head injuries, the latter could. NHTSA believes that protection should be provided for all the hard areas in the upper interior of vehicles, unless it is not practicable to do so.

With regard to which components in convertibles are excluded, ''convertible roof linkage mechanism'' is defined as ''any anchorage, fastener, or device necessary to deploy a convertible roof frame.'' This definition is not limited to components on the roof itself. Some convertibles include anchor points on the front header and/or A-pillar for the convertible roof. These components are included in the definition of ''convertible roof linkage mechanism'' and thus were excluded from the final rule.

2. Pillars

Some manufacturers asked for changes to the definitions for various pillars because they have difficulty applying the definitions to the unusual designs of their vehicles. For example, Toyota stated that one of its vehicles has an unusual side window design which is cut-out lower at the front edge of the window. Toyota believes that, for this design, the definition of Plane 9 (a horizontal plane passing through the lowest point of the daylight opening forward of the B-pillar) results in a target BP3 which is lower on the B-pillar than NHTSA intended, or even below the B-pillar.

NHTSA has decided not to make any changes to these definitions based on these designs. Unless NHTSA were to write a unique set of target location provisions for each vehicle model in production, it is inevitable that use of a test procedure based on specific targets will not succeed in locating all target points on some vehicles. Even if NHTSA were to write unique provisions for each vehicle model currently in production, the procedures might no longer ensure that all targets could be located once a vehicle model was redesigned or a new vehicle model introduced. For this reason, NHTSA examined a wide number of vehicles when selecting targets and attempted to write the target location procedures in a way that would make it possible to locate all points on a majority of vehicles and a sufficient number of points on all vehicles. Section S4 (S6.1 and S6.2) states that ''(t)he requirements do not apply to any target that cannot be located using the procedures of S8 (S10).'' This provision adequately addresses the problem of unusual vehicle designs. NHTSA will not amend the definitions or change the target provisions absent information indicating that they are not workable for a significant number of target points on a wide variety of vehicle models.

3. Windshield Trim/Surface of the Vehicle Ceiling

Manufacturers also asked for definitions for the phrases ''windshield trim'' and ''surface of the vehicle ceiling.'' These phrases are used in the procedures to locate some targets. NHTSA agrees that these phrases are susceptible to more than one interpretation. Accordingly, the agency has added a definition of ''windshield trim.'' It has also replaced the phrase ''surface of the vehicle ceiling'' with the phrase ''interior roof surface'' to clarify that it is a reference to the interior surface only.

B. Test Conditions

1. Targeting Conditions

Section S4 (S6) requires vehicles to comply when tested under the conditions specified in S6 (S8). Section S8 (S10) does not indicate whether or not targets are located under the same conditions. Manufacturers asked whether the test conditions applied only during testing or also during the locating of the targets.

In the final rule, NHTSA did not specify whether or not the test conditions applied during target location as well as during testing. Most of the test conditions replicate conditions that would exist during vehicle use. However, some test conditions are intended to facilitate testing, and do not represent conditions that would arise during vehicle use. For example, seats and steering wheels may be removed to facilitate placing test equipment used to provide air pressure for and launch the FMH in the vehicle. NHTSA believes that these parts should be present when the targets are located. If, during target location, the seat or steering wheel prevents the FMH from contacting the target, it is also likely that an occupant could not impact that area. NHTSA has amended the regulatory language to specify which test conditions apply during the locating of the targets.

2. Removal of Attachments on Vehicle Interior Surface

Manufacturers asked NHTSA to prohibit the removal of any items that are attached to the upper interior of the vehicle. Currently, removal of some such attachments is explicitly permitted, allowing NHTSA to test a target on or near such attachments with or without the attachment in place. Some attachments may be in a variety of positions, and therefore may or may not be in the target location when the vehicle is in use. Thus, for example, S6.5 specifies that sun visors may be

removed. Other attachments are a target, and removal makes it easier to contact other targets. Thus, for example, S6.7 allows a seat belt anchorage to be removed to test the component on which it is mounted if the target is not on the anchorage. Other attachments are not explicitly addressed.

Manufacturers argued that companies may wish to use attachments as some of the countermeasures to meet the rule. Removal of the attachments would remove those countermeasures. Manufacturers also argued that removal of attachments could adversely affect the material on the component on which the attachment is mounted, and cause the vehicle to no longer comply with the requirements of the rule.

It is possible that manufacturers could use attachments as part of the countermeasures to meet the new requirements. In addition, the means by which some attachments are anchored to the upper interior components could make it difficult or impossible to remove the attachment without adversely affecting the surrounding material. Finally, the agency notes that the attachments would be present in the vehicle during a crash, even if not in the specific target location NHTSA is testing. Therefore, the agency is specifying that no attachments, including sun visors and seat belt anchorages, are removed for testing.

3. Securing Vehicle That is Not Resting on its Suspension

Section S6.1 (S8.1) specified that a vehicle being tested is supported so that it is not resting on its suspension. Manufacturers asked whether the vehicle was clamped down when not resting on its suspension.

The regulatory text does not specify whether or not the vehicle is clamped down when not resting on its suspension. Therefore, NHTSA could test the vehicle either clamped or not. NHTSA notes that clamping would make the vehicle body stiffer, and thus is likely to be a worst case condition for manufacturers when they are doing certification testing. NHTSA does not believe it is necessary to specify one of these conditions in the final rule.

4. Removal of Windows

Section S6.2 (S8.2) requires windows to be open. Section 6.4 (S8.4) allows side doors on the opposite side of the vehicle from the target to be impacted to be open. Manufacturers asked whether windows could be removed for testing.

In some vehicles (e.g., vans), it may be necessary to remove windows to allow placement of the test equipment inside the vehicle to aim the FMH at some targets. These vehicles may not have doors in the rear portion of the vehicle and may have windows in this area which do not open, or which do not open sufficiently to allow placing test equipment in the vehicle. The regulatory text has been amended to allow removal of windows on the opposite side from a target during testing of that target.

5. Rear Doors

Section S6.4 (S8.4) allows side doors on the side of the vehicle not be impacted during a particular test to be open. Manufacturers asked whether a rear hatch or rear door could be opened for testing.

The regulatory language only allows side doors to be open. NHTSA decided to allow doors to be open to allow test equipment to access the targets. Because an open door could change the stiffness of adjacent vehicle components, NHTSA only allowed side doors on the opposite side of the longitudinal centerline of the vehicle from the target to be open. For some targets, it may be difficult or impossible to reach the target with test equipment from a side door. Therefore, NHTSA has decided to allow rear windows or doors to be open for testing of any target except those on the rear header, the rearmost pillars, and the rearmost side rail target SR3 on each side of the vehicle. The agency believes that the performance of these targets could be affected by an open rear door or window.

6. Sun Visors

Section S6.5 (S8.5) allows sun visors to be placed in any adjustment position as long as one side is in contact with the vehicle interior surface. Manufacturers asked NHTSA to specify a single position for testing. NHTSA is not changing this test condition because the sun visor could be in any position when in use.

7. Location of Head Center of Gravity

Section S6.12 (S8.12) specifies the location of the head center of gravity in reference to the seating reference point (SgRP). The agency was asked to change the reference to the H-point. The SgRP is defined at 49 CFR 571.3 in reference to the design H-point with the seat in its rearmost normal design driving or riding position. Therefore, the agency does not believe a change is necessary.

Manufacturers noted that target RP2 is located on the rearmost pillar with reference to the center of gravity of the head for the rearmost designated seating position. Manufacturers asked how this is determined for vehicles in which the rearmost seat is rearward facing. NHTSA is amending the procedures to specify that the rearward measurement used to locate the head center of gravity is made relative to the seat orientation and not the vehicle orientation.

8. Initial Contact

Section S6.13.3 (S8.13.3) specifies that some portion of the forehead impact zone is to contact some point of the target circle defined in S6.11 at the time of initial contact. If this does not occur, manufacturers asked if the FMH were to be moved, or the target circle, or both. Manufacturers also asked NHTSA to include the prohibition proposed in the NPRM that ''no portion of the headform contacts any part of the vehicle outside the impact zone.''

Section S8(b) (S10(b)) provides for the relocation of any target point which cannot be contacted by some portion of the forehead impact zone at some combination of impact angles. The relocated point is the point used for testing. If, for some reason, a portion of the forehead impact zone is not the point of initial contact when the testing is repeated at the relocated point, the test is considered an incomplete test. The target is not relocated again.

With regard to the second request, the final rule eliminated the impact zone concept and substituted targets. The procedures ensure that the initial contact is between the target and the forehead impact zone. Because there no longer are impact zones, the NPRM prohibition on impacts outside the zone is not appropriate or necessary.

9. Approach Angles

Section S6.13.4.1 (S8.13.4.1) describes a procedure to determine maximum and minimum horizontal approach angles. Manufacturers asked whether the component surface or the attachment is used in determining the shortest horizontal line when an attachment is in the same horizontal plane as the head center of gravity.

NHTSA does not believe that the selection of either distance would result in a significantly different approach angle. However, since the agency is specifying that the attachments are to remain in place, the measurements will be made to the attachment if that is the shortest distance.

Pursuant to S6.13.4.2(a) (S8.13.4.2(a)), the maximum vertical approach angle for each target is determined by rotating the FMH upward until a portion of the FMH outside the forehead impact zone contacts the vehicle and then rotating the FMH downward five degrees. Some manufacturers petitioned for the amount of downward rotation to be increased

because chin contact could still occur during testing.

In the final rule, the agency added the five degree offset in response to manufacturer concerns about chin contact. NHTSA never stated that this amount was sufficient to prevent chin contacts, only that it would delay chin contact. Because NHTSA continues to believe this amount is sufficient for this purpose, it is not making any further changes.

10. Minimum Impact Distance

Section S6.14 (S8.14) prohibits multiple impacts when the distance between the targets is less than 150 mm. This distance was determined during NHTSA testing of various types of padding as an expected countermeasure. Manufacturers expressed concern that for other types of countermeasures, performance will be degraded for multiple impacts on the same component, regardless of the distance between the targets.

While NHTSA appreciates that its testing was done only using padding, manufacturers did not submit any data indicating that the 150 mm distance was not adequate for any other countermeasure. Absent such information, NHTSA is not changing this test condition.

C. Target Locations

1. Issues Related to Multiple Targets

Section S8(b) (S10(b)) describes a procedure for relocating targets when no portion of the forehead impact zone can contact the target. Manufacturers asked NHTSA to delete this, arguing that it allowed for infinite test possibilities. Manufacturers also asked what is done when contact is prevented by interference from attachments.

NHTSA is not deleting the relocation procedures. The forehead impact zone is approximately fifteen inches square. It is likely that the forehead impact zone will contact the entire area within the 1.5 inch target circle specified in S8(b) (S10(b)). Even if multiple impacts are possible, it is not different than other targets which allow options. In addition, it is unlikely that the injury measurements would differ significantly between the possible targets in such a small area.

With regard to the interference of attachments, NHTSA is making one change. Section S8(b) (S10(b)) is amended to allow relocation within a sphere rather than a circle. As noted above, NHTSA has decided that attachments should not be moved. Allowing relocation within a sphere when there is interference by an attachment will allow the target to be relocated onto the attachment. This will limit the need for increasing the relocation area due to interference. The agency also notes that, unless otherwise specified, movable attachments may be moved to any position for the purpose of testing. This will also reduce the incidence of interference.

2. A-Pillar Targets

Manufacturers indicated concerns that the A-pillar reference point (APR) and target AP1 could not be located in some vehicles, particularly convertibles, and the points would be located in space. NHTSA does not agree that this is the case. NHTSA is not aware of any vehicles that do not have some type of roof to protect occupants from rain and snow. Section S6.3 (S8.3) states that convertible vehicles are tested with their tops closed. Therefore, even in these vehicles there would be an exterior roof surface to use in locating APR. If APR is on the soft cloth of a roof, it is unlikely that NHTSA would actually conduct a test (since such a surface would not produce a high injury measurement), but there would also be a target AP1.

Manufacturers also asked whether measurements were made along each convolution of the outside weather stripping or rain gutter. NHTSA would not take measurements in such a manner, but would instead follow the nominal vehicle surface. By following the nominal surface, NHTSA means that the measurement is made as though the weather stripping or rain gutters were not present.

Manufacturers also asked whether weather stripping was included in the determination of the ''outboardmost point * * * with the vehicle side door open.'' The answer is yes. Viewed perpendicular to the top of the test vehicle (or the plan view) with the side door open, the ''outboardmost point'' is the outermost edge of the door opening (including uncompressed weather stripping, trim, or rain gutter).

Manufacturers also noted that some vehicles have split or dual A-pillars and asked whether such vehicles would have multiple AP2 and AP3 target points. If the pillars are not part of the door structure, they are treated as separate pillars. Thus, it is possible to have multiple AP2 and AP3 target points. To clarify this, the definition of A-pillar is amended to specify ''* * * any pillar that is entirely forward of a transverse vertical plane passing through the seating reference point of the driver's seat.'' In addition, the definition of B-pillar is amended to specify ''* * * the forwardmost pillar on each side of the vehicle that is, in whole or part, rearward of a transverse vertical plane passing through the seating reference point of the driver's seat.''

Finally, manufacturers noted that the highest point at the intersection of the dashboard and the A-pillar is not always apparent, because in some vehicles there is a small gap between the two components. Manufacturers also stated that this point could be one height on one side of the vehicle and another height on the other side. NHTSA has re-examined current production vehicles and agrees that there is often a small gap or depression between the dashboard and the A-pillar. However, this is equivalent to the convolutions at edges of trim discussed above. Again, NHTSA would measure along the nominal surface, as if the small gap did not exist. Section S8(a) (S10(a)) provides that targets are located on each side of the vehicle using the specified procedures. Therefore, if the point of intersection is at different heights on each side of the vehicle, there is a different plane 5 defined on each side of the vehicle. Manufacturers should not simply transfer points from one side of the vehicle to the other.

3. B-pillar Targets

Manufacturers asked a number of questions concerning belt anchorages on the B-pillar. Manufacturers asked the location of target BP2 for an anchorage which is covered by trim such that only the webbing is visible through a slot in the trim. Manufacturers also asked whether a stalk would be considered part of the anchorage and thus a possible target.

The seat belt anchorage is defined in S2.1 (S3). The regulation states that the target is any point on the anchorage. Thus, manufacturers must certify that all portions of the anchorage comply with the requirements. Targets can be located on decorative trim covering the anchorage or a portion of the anchorage.

Manufacturers also asked whether the centerline of the width of the B-pillar is determined by viewing the pillar laterally. The answer is yes.

Finally, one manufacturer noted that, for location of target BP3, Plane 9 passes ''through the lowest point of the daylight opening forward of the pillar. The manufacturer stated that one of its vehicle designs has an unusual window design. The manufacturer believed that Plane 9 would not be located in that vehicle as intended by NHTSA. As stated previously, NHTSA acknowledges that not all points can be located in every vehicle, and that not all points will be located on the hardest

points of every vehicle. This result is inherent in using a test procedure applicable to all vehicles, rather than a procedure individually tailored for each vehicle model. However, NHTSA will not change the specification for a target unless it is not appropriate for a large number of vehicles.

4. Other Pillar Targets

Manufacturers asked whether vehicles with multiple ''other pillars'' have multiple other pillar targets. The answer is yes. The procedures do not specify a single ''other pillar.'' In addition, there would be multiple SR3 targets since they are located relative to the other pillar reference point (OPR).

5. Front Header Targets

Manufacturers noted that the term ''sunroof frame'' was not defined. NHTSA agrees that this term could be confusing and is changing it to ''interior sunroof opening.'' Manufacturers also asked whether the sunroof is open or closed during testing. NHTSA believes that sunroofs are similar to windows and has, therefore, added language to indicate that they are treated in the same manner.

Manufacturers also asked whether a ''Targa'' roof, which contains a considerable amount of glass and is larger than most sun roofs, is considered a sunroof. Other standards (e.g., Standard No. 216, ''Roof Crush Resistance'') use the term ''convertible.'' In previous interpretations of that term, NHTSA stated that a Targa roof is a convertible. In these interpretation letters, NHTSA has consistently stated that a convertible is ''a vehicle whose A-pillars or windshield peripheral support is not joined with the B-pillars (or rear roof support rearward of the B-pillar position) by a fixed, rigid structural member.'' A comparable definition has been included in the amended final rule.

6. Side Rail Targets

Manufacturers noted that some side rail targets (SR1 and SR2) are less than six inches apart. Since S6.14 (S8.14) specifies that impacts are not to occur less than six inches apart, they stated that they might have to use more than one vehicle to complete the tests for all possible combinations of targets on left and right sides. NHTSA is changing the procedure to locate target SR2 so that it is either 12 inches rearward of APR or 12 inches forward of the B-pillar reference point (BPR). This will provide at least six inches between targets SR1 and SR2 as measured from the APR reference.

Manufacturers also noted that some vehicles (such as pickup trucks) have only two pillars on either side of the vehicle and asked whether the rear pillar is treated as a B-pillar, a rearmost-pillar, or both, for the purpose of locating side rail targets. In the 1995 final rule, the rearmost pillar in a vehicle with two pillars on each side is defined as a ''rearmost pillar'' and not as a ''B-pillar.'' Therefore, there is no ''side rail between the A-pillar and the B-pillar'' (S8.6 (S10.6)). For ''other side rails'' (S8.7 (S10.7)), targets are located in reference to BPR or OPR, neither of which exists in the vehicles. NHTSA did not intend that there would be no side rail targets in these vehicles, and is amending the procedures for locating target SR2 for these vehicles.

One manufacturer asked whether grab handles located on the upper interior in locations other than the side rail are targets. Section S8.7 (S10.7) states that if there is no seat belt anchorage on the side rail, but there is a grab handle, target SR3 is located on the grab handle. Since there are not similar specifications for other interior components, grab handles in other locations are not targets unless the procedures locate them there.

7. Upper Roof Targets

The procedures for defining planes C and D for the upper roof specify that the planes are tangent to outermost points on the ''interior roof (including trim)'' at a distance of 12 inches rearward of the APR. Manufacturers asked for clarification of how those points on the interior roof are to be determined. Those points are determined by closing the doors and marking where the door parts (with or without weather stripping) intersect the roof parts (with or without weather stripping), at a horizontal distance of 12 inches behind the APR.

Manufacturers also asked whether, in establishing transverse vertical planes A and plane B, the rear view mirror and the center high mounted stop light (CHMSL), respectively, are considered part of the trim. The rearview mirror and the center high mounted stop light (CHMSL) are not considered trim. An example of trim would be weather stripping. The rearview mirror and CHMSL are considered ''attachments.''

8. Sliding Door Track Targets

Manufacturers noted that target SD is not necessarily located on the sliding door track at the door opening edge, and asked whether this is the intent of the test procedure. The answer is yes.

Manufacturers also noted that horizontal and vertical approach angles were not specified for target SD in the final rule, and asked whether the side rail angles apply. This was the intent of the final rule. Horizontal and vertical approach angles for the sliding door track will be added to Table 1.

9. Roll-Bar Targets

Manufacturers asked whether there is a target on a deployable roll-bar. Since the definition of ''roll-bar'' does not include deployable roll-bars, there are no targets on a deployable roll bar.

VI. Rulemaking Analyses and Notices

A. Executive Order 12866 and DOT Regulatory Policies and Procedures

NHTSA has considered the impact of this rulemaking action under E.O. 12866 and the Department of Transportation's regulatory policies and procedures. This rulemaking document was reviewed under E.O. 12866, ''Regulatory Planning and Review.'' This action has been determined to be ''significant'' under the Department of Transportation's regulatory policies and procedures. The changes implemented in this final rule do not appear to add further significant economic impact over the existing requirements. The only apparent economic impact appears to be relief of $7 million dollars for small school bus manufacturers, as discussed earlier in this notice.

B. Regulatory Flexibility Act

NHTSA has also considered the impacts of this final rule under the Regulatory Flexibility Act. I hereby certify that this rule will not have a significant economic impact on a substantial number of small entities and for those small entities likely to be affected, specific relief has been accorded in the notice. The changes made in this final rule do not substantially alter the final rule published on August 18, 1995.

C. Paperwork Reduction Act

In accordance with the Paperwork Reduction Act of 1980 (Pub. L. 96–511), the agency notes that there are no requirements for information collection associated with this final rule.

D. National Environmental Policy Act

NHTSA has also analyzed this final rule under the National Environmental Policy Act and determined that it will not have a significant impact on the human environment.

E. Executive Order 12612 (Federalism)

NHTSA has analyzed this rule in accordance with the principles and criteria contained in E.O. 12612, and has determined that this rule will not have sufficient federalism implications

to warrant the preparation of a Federalism Assessment.

F. Civil Justice Reform

This final rule does not have any retroactive effect. Under 49 U.S.C. 30103, whenever a Federal motor vehicle safety standard is in effect, a State may not adopt or maintain a safety standard applicable to the same aspect of performance which is not identical to the Federal standard, except to the extent that the State requirement imposes a higher level of performance and applies only to vehicles procured for the State's use. 49 U.S.C. 30161 sets forth a procedure for judicial review of final rules establishing, amending or revoking Federal motor vehicle safety standards. That section does not require submission of a petition for reconsideration or other administrative proceedings before parties may file suit in court.

In consideration of the foregoing, 49 CFR Ch. V is amended as follows:

List of Subjects in 49 CFR Parts 571 and 589

Imports, Motor vehicle safety, Motor vehicles.

PART 571—FEDERAL MOTOR VEHICLE SAFETY STANDARDS

1. The authority citation for part 571 of title 49 continues to read as follows:

Authority: 49 U.S.C. 322, 30111, 30115, 30117, and 30166; delegation of authority at 49 CFR 1.50.

2. Section 571.201 is revised to read as follows:

§ 571.201 Standard No. 201; Occupant protection in interior impact.

S1. *Purpose and scope.* This standard specifies requirements to afford impact protection for occupants.

S2. *Application.* This standard applies to passenger cars and to multipurpose passenger vehicles, trucks, and buses with a GVWR of 4,536 kilograms or less, except that the requirements of S6 do not apply to buses with a GVWR of 3,860 kilograms or less.

S3. *Definitions.*

A-pillar means any pillar that is entirely forward of a transverse vertical plane passing through the seating reference point of the driver's seat.

Ambulance means a motor vehicle designed exclusively for the purpose of emergency medical care, as evidenced by the presence of a passenger compartment to accommodate emergency medical personnel, one or more patients on litters or cots, and equipment and supplies for emergency care at a location or during transport.

B-pillar means the forwardmost pillar on each side of the vehicle that is, in whole or part, rearward of a transverse vertical plane passing through the seating reference point of the driver's seat, unless there is only one pillar rearward of that plane and it is also a rearmost pillar.

Brace means a fixed diagonal structural member in an open body vehicle that is used to brace the roll-bar and that connects the roll-bar to the main body of the vehicle structure.

Convertible means a vehicle whose A-pillars are not joined with the B-pillars (or rearmost pillars) by a fixed, rigid structural member.

Convertible roof frame means the frame of a convertible roof.

Convertible roof linkage mechanism means any anchorage, fastener, or device necessary to deploy a convertible roof frame.

Daylight opening means, for openings on the side of the vehicle, other than a door opening, the locus of all points where a horizontal line, perpendicular to the vehicle longitudinal centerline, is tangent to the periphery of the opening. For openings on the front and rear of the vehicle, other than a door opening, *daylight opening* means the locus of all points where a horizontal line, parallel to the vehicle longitudinal centerline, is tangent to the periphery of the opening. If the horizontal line is tangent to the periphery at more than one point at any location, the most inboard point is used to determine the daylight opening.

Door opening means, for door openings on the side of the vehicle, the locus of all points where a horizontal line, perpendicular to the vehicle longitudinal centerline, is tangent to the periphery of the side door opening. For door openings on the back end of the vehicle, *door opening* means the locus of all points where a horizontal line, parallel to the vehicle longitudinal centerline, is tangent to the periphery of the back door opening. If the horizontal line is tangent to the periphery at more than one point at any location, the most inboard point is the door opening.

Forehead impact zone means the part of the free motion headform surface area that is determined in accordance with the procedure set forth in S8.10.

Free motion headform means a test device which conforms to the specifications of part 572, subpart L of this chapter.

Mid-sagittal plane of a dummy means a longitudinal vertical plane passing through the seating reference point of a designated seating position.

Motor Home means a motor vehicle with motive power that is designed to provide temporary residential accommodations, as evidenced by the presence of at least four of the following facilities: Cooking; refrigeration or ice box; self-contained toilet; heating and/or air conditioning; a potable water supply system including a faucet and a sink; and a separate 110–125 volt electrical power supply and/or an LP gas supply.

Other pillar means any pillar which is not an A-pillar, a B-pillar, or a rearmost pillar.

Pillar means any structure, excluding glazing and the vertical portion of door window frames, but including accompanying moldings, attached components such as safety belt anchorages and coat hooks, which:

(1) Supports either a roof or any other structure (such as a roll-bar) that is above the driver's head, or

(2) Is located along the side edge of a window.

Roll-bar means a fixed overhead structural member, including its vertical support structure, that extends from the left to the right side of the passenger compartment of any open body vehicles and convertibles. It does not include a header.

Seat belt anchorage means any component involved in transferring seat belt loads to the vehicle structure, including, but not limited to, the attachment hardware, but excluding webbing or straps, seat frames, seat pedestals, and the vehicle structure itself, whose failure causes separation of the belt from the vehicle structure.

Sliding door track means a track structure along the upper edge of a side door opening that secures the door in the closed position and guides the door when moving to and from the open position.

Stiffener means a fixed overhead structural member that connects one roll-bar to another roll-bar or to a header of any open body vehicle or convertible.

Upper roof means the area of the vehicle interior that is determined in accordance with the procedure set forth in S8.15.

Windshield trim means molding of any material between the windshield glazing and the exterior roof surface, including material that covers a part of either the windshield glazing or exterior roof surface..

S4 *Requirements*

S4.1 Except as provided in S4.2, each vehicle shall comply with either:

(a) The requirements specified in S5, or,

(b) The requirements specified in S5 and S6.

S4.2 Vehicles manufactured on or after September 1, 1998 shall comply with the requirements of S5 and S6.

S5 *Requirements for instrument panels, seat backs, interior*

compartment doors, sun visors, and armrests. Each vehicle shall comply with the requirements specified in S5.1 through S5.5.2.

S5.1 *Instrument panels.* Except as provided in S5.1.1, when that area of the instrument panel that is within the head impact area is impacted in accordance with S5.1.2 by a 6.8 kilogram, 165 mm diameter head form at—

(a) A relative velocity of 24 kilometers per hour for all vehicles except those specified in paragraph (b) of this section,

(b) A relative velocity of 19 kilometers per hour for vehicles that meet the occupant crash protection requirements of S5.1 of 49 CFR 571.208 by means of inflatable restraint systems and meet the requirements of S4.1.2.1(c)(2) of 49 CFR 571.208 by means of a Type 2 seat belt assembly at the right front designated seating position, the deceleration of the head form shall not exceed 80g continuously for more than 3 milliseconds.

S5.1.1 The requirements of S5.1 do not apply to:

(a) Console assemblies;

(b) Areas less than 125 mm inboard from the juncture of the instrument panel attachment to the body side inner structure;

(c) Areas closer to the windshield juncture than those statically contactable by the head form with the windshield in place;

(d) Areas outboard of any point of tangency on the instrument panel of a 165 mm diameter head form tangent to and inboard of a vertical longitudinal plane tangent to the inboard edge of the steering wheel; or

(e) Areas below any point at which a vertical line is tangent to the rearmost surface of the panel.

S5.1.2 *Demonstration procedures.* Tests shall be performed as described in Society of Automotive Engineers Recommended Practice J921, ''Instrument Panel Laboratory Impact Test Procedure,'' June 1965, using the specified instrumentation or instrumentation that meets the performance requirements specified in Society of Automotive Engineers Recommended Practice J977, ''Instrumentation for Laboratory Impact Tests,'' November 1966, except that:

(a) The origin of the line tangent to the instrument panel surface shall be a point on a transverse horizontal line through a point 125 mm horizontally forward of the seating reference point of the front outboard passenger designated seating position, displaced vertically an amount equal to the rise which results from a 125 mm forward adjustment of the seat or 19 mm; and

(b) Direction of impact shall be either:

(1) In a vertical plane parallel to the vehicle longitudinal axis; or

(2) In a plane normal to the surface at the point of contact.

S5.2 *Seat Backs.* Except as provided in S5.2.1, when that area of the seat back that is within the head impact area is impacted in accordance with S5.2.2 by a 6.8 kilogram, 165 mm diameter head form at a relative velocity of 24 kilometers per hour, the deceleration of the head form shall not exceed 80g continuously for more than 3 milliseconds.

S5.2.1 The requirements of S5.2 do not apply to seats installed in school buses which comply with the requirements of Standard No. 222, *School Bus Passenger Seating and Occupant Protection* (49 CFR 571.222) or to rearmost side-facing, back-to-back, folding auxiliary jump, and temporary seats.

S5.2.2 *Demonstration procedures.* Tests shall be performed as described in Society of Automotive Engineers Recommended Practice J921, ''Instrument Panel Laboratory Impact Test Procedure,'' June 1965, using the specified instrumentation or instrumentation that meets the performance requirements specified in Society of Automotive Engineers Recommended Practice J977, ''Instrumentation for Laboratory Impact Tests,'' November 1966, except that:

(a) The origin of the line tangent to the uppermost seat back frame component shall be a point on a transverse horizontal line through the seating reference point of the right rear designated seating position, with adjustable forward seats in their rearmost design driving position and reclinable forward seat backs in their nominal design driving position;

(b) Direction of impact shall be either:

(1) In a vertical plane parallel to the vehicle longitudinal axis; or

(2) In a plane normal to the surface at the point of contact.

(c) For seats without head restraints installed, tests shall be performed for each individual split or bucket seat back at points within 100 mm left and right of its centerline, and for each bench seat back between points 100 mm outboard of the centerline of each outboard designated seating position;

(d) For seats having head restraints installed, each test shall be conducted with the head restraints in place at its lowest adjusted position, at a point on the head restraint centerline; and

(e) For a seat that is installed in more than one body style, tests conducted at the fore and aft extremes identified by application of subparagraph (a) shall be deemed to have demonstrated all intermediate conditions.

S5.3 *Interior compartment doors.* Each interior compartment door assembly located in an instrument panel, console assembly, seat back, or side panel adjacent to a designated seating position shall remain closed when tested in accordance with either S5.3.1(a) and S5.3.1(b) or S5.3.1(a) and S5.3.1(c). Additionally, any interior compartment door located in an instrument panel or seat back shall remain closed when the instrument panel or seat back is tested in accordance with S5.1 and S5.2. All interior compartment door assemblies with a locking device must be tested with the locking device in an unlocked position.

S5.3.1 *Demonstration procedures.*

(a) Subject the interior compartment door latch system to an inertia load of 10g in a horizontal transverse direction and an inertia load of 10g in a vertical direction in accordance with the procedure described in section 5 of SAE Recommended Practice J839b, ''Passenger Car Side Door Latch Systems,'' May 1965, or an approved equivalent.

(b) Impact the vehicle perpendicularly into a fixed collision barrier at a forward longitudinal velocity of 48 kilometers per hour.

(c) Subject the interior compartment door latch system to a horizontal inertia load of 30g in a longitudinal direction in accordance with the procedure described in section 5 of SAE Recommended Practice J839b, ''Passenger Car Side Door Latch Systems,'' May 1965, or an approved equivalent.

S5.4 *Sun visors.*

S5.4.1 A sun visor that is constructed of or covered with energy-absorbing material shall be provided for each front outboard designated seating position.

S5.4.2 Each sun visor mounting shall present no rigid material edge radius of less than 3.2 mm that is statically contactable by a spherical 165 mm diameter head form.

S5.5 *Armrests.*

S5.5.1 *General.* Each installed armrest shall conform to at least one of the following:

(a) It shall be constructed with energy-absorbing material and shall deflect or collapse laterally at least 50 mm without permitting contact with any underlying rigid material.

(b) It shall be constructed with energy-absorbing material that deflects or collapses to within 32 mm of a rigid

test panel surface without permitting contact with any rigid material. Any rigid material between 13 and 32 mm from the panel surface shall have a minimum vertical height of not less than 25 mm.

(c) Along not less than 50 continuous mm of its length, the armrest shall, when measured vertically in side elevation, provide at least 50 mm of coverage within the pelvic impact area.

S5.5.2 *Folding armrests.* Each armrest that folds into the seat back or between two seat backs shall either:

(a) Meet the requirements of S5.5.1; or

(b) Be constructed of or covered with energy-absorbing material.

S6 *Requirements for upper interior components.*

S6.1 *Vehicles manufactured on or after September 1, 1998 and before September 1, 2002.* Except as provided in S6.3, for vehicles manufactured on or after September 1, 1998 and before September 1, 2002, a percentage of the manufacturer's production, as specified in S6.1.1, S6.1.2, S6.1.3, or S6.1.4, shall, when tested under the conditions of S8, comply with the requirements specified in S7 at the target locations specified in S10 when impacted by the free motion headform specified in S8.9 at any speed up to and including 24 kilometers per hour. The requirements do not apply to any target that cannot be located using the procedures of S10. The phase-in schedule the manufacturer chooses to use during this period shall be reported to the National Highway Traffic Safety Administration pursuant to 49 CFR 589.6.

S6.1.1 *Phase-in Schedule* #1

S6.1.1.1 *Vehicles manufactured on or after September 1, 1998 and before September 1, 1999.* Subject to S6.1.5(a), for vehicles manufactured by a manufacturer on or after September 1, 1998 and before September 1, 1999, the amount of vehicles complying with S7 shall be not less than 10 percent of:

(a) The manufacturer's average annual production of vehicles manufactured on or after September 1, 1996 and before September 1, 1999, or

(b) The manufacturer's production on or after September 1, 1998 and before September 1, 1999.

S6.1.1.2 *Vehicles manufactured on or after September 1, 1999 and before September 1, 2000.* Subject to S6.1.5(b), for vehicles manufactured by a manufacturer on or after September 1, 1999 and before September 1, 2000, the amount of vehicles complying with S7 shall be not less than 25 percent of:

(a) The manufacturer's average annual production of vehicles manufactured on or after September 1, 1997 and before September 1, 2000, or

(b) The manufacturer's production on or after September 1, 1999 and before September 1, 2000.

S6.1.1.3 *Vehicles manufactured on or after September 1, 2000 and before September 1, 2001.* Subject to S6.1.5(c), for vehicles manufactured by a manufacturer on or after September 1, 2000 and before September 1, 2001, the amount of vehicles complying with S7 shall be not less than 40 percent of:

(a) The manufacturer's average annual production of vehicles manufactured on or after September 1, 1998 and before September 1, 2001, or

(b) The manufacturer's production on or after September 1, 2000 and before September 1, 2001.

S6.1.1.4 *Vehicles manufactured on or after September 1, 2001 and before September 1, 2002.* Subject to S6.1.5(d), for vehicles manufactured by a manufacturer on or after September 1, 2001 and before September 1, 2002, the amount of vehicles complying with S7 shall be not less than 70 percent of:

(a) The manufacturer's average annual production of vehicles manufactured on or after September 1, 1999 and before September 1, 2002, or

(b) The manufacturer's production on or after September 1, 2001 and before September 1, 2002.

S6.1.2 *Phase-in Schedule* #2

S6.1.2.1 *Vehicles manufactured on or after September 1, 1998 and before September 1, 1999.* Subject to S6.1.5(a), for vehicles manufactured by a manufacturer on or after September 1, 1998 and before September 1, 1999, the amount of vehicles complying with S7 shall be not less than seven percent of:

(a) The manufacturer's average annual production of vehicles manufactured on or after September 1, 1996 and before September 1, 1999, or

(b) The manufacturer's production on or after September 1, 1998 and before September 1, 1999.

S6.1.2.2 *Vehicles manufactured on or after September 1, 1999 and before September 1, 2000.* Subject to S6.1.5(b), for vehicles manufactured by a manufacturer on or after September 1, 1999 and before September 1, 2000, the amount of vehicles complying with S7 shall be not less than 31 percent of:

(a) The manufacturer's average annual production of vehicles manufactured on or after September 1, 1997 and before September 1, 2000, or

(b) The manufacturer's production on or after September 1, 1999 and before September 1, 2000.

S6.1.2.3 *Vehicles manufactured on or after September 1, 2000 and before September 1, 2001.* Subject to S6.1.5(c), for vehicles manufactured by a manufacturer on or after September 1, 2000 and before September 1, 2001, the amount of vehicles complying with S7 shall be not less than 40 percent of:

(a) The manufacturer's average annual production of vehicles manufactured on or after September 1, 1998 and before September 1, 2001, or

(b) The manufacturer's production on or after September 1, 2000 and before September 1, 2001.

S6.1.2.4 *Vehicles manufactured on or after September 1, 2001 and before September 1, 2002.* Subject to S6.1.5(d), for vehicles manufactured by a manufacturer on or after September 1, 2001 and before September 1, 2002, the amount of vehicles complying with S7 shall be not less than 70 percent of:

(a) The manufacturer's average annual production of vehicles manufactured on or after September 1, 1999 and before September 1, 2002, or

(b) The manufacturer's production on or after September 1, 2001 and before September 1, 2002.

S6.1.3 *Phase-in Schedule* #3

S6.1.3.1 Vehicles manufactured on or after September 1, 1998 and before September 1, 1999 are not required to comply with the requirements specified in S7.

S6.1.3.2 Vehicles manufactured on or after September 1, 1999 shall comply with the requirements specified in S7.

S6.1.4 *Phase-in Schedule* #4 A final stage manufacturer or alterer may, at its option, comply with the requirements set forth in S6.1.4.1 and S6.1.4.2.

S6.1.4.1 Vehicles manufactured on or after September 1, 1998 and before September 1, 2002 are not required to comply with the requirements specified in S7.

S6.1.4.2 Vehicles manufactured on or after September 1, 2002 shall comply with the requirements specified in S7.

S6.1.5 *Calculation of complying vehicles.*

(a) For the purposes of complying with S6.1.1.1 or S6.1.2.1, a manufacturer may count a vehicle if it is manufactured on or after May 8, 1997, but before September 1, 1999.

(b) For the purposes of complying with S6.1.1.2 or S6.1.2.2, a manufacturer may count a vehicle if it:

(1) Is manufactured on or after May 8, 1997, but before September 1, 2000, and

(2) Is not counted toward compliance with S6.1.1.1 or S6.1.2.1, as appropriate.

(c) For the purposes of complying with S6.1.1.3 or S6.1.2.3, a manufacturer may count a vehicle if it:

(1) Is manufactured on or after May 8, 1997, but before September 1, 2001, and

(2) Is not counted toward compliance with S6.1.1.1, S6.1.1.2, S6.1.2.1, or S6.1.2.2, as appropriate.

(d) For the purposes of complying with S6.1.1.4 or S6.1.2.4, a manufacturer may count a vehicle if it:

(1) Is manufactured on or after May 8, 1997, but before September 1, 2002, and

(2) Is not counted toward compliance with S6.1.1.1, S6.1.1.2, S6.1.1.3, S6.1.2.1, S6.1.2.2, or S6.1.2.3, as appropriate.

S6.1.6 *Vehicles produced by more than one manufacturer.*

S6.1.6.1 For the purpose of calculating average annual production of vehicles for each manufacturer and the number of vehicles manufactured by each manufacturer under S6.1.1 through S6.1.4, a vehicle produced by more than one manufacturer shall be attributed to a single manufacturer as follows, subject to S6.1.6.2.

(a) A vehicle which is imported shall be attributed to the importer.

(b) A vehicle manufactured in the United States by more than one manufacturer, one of which also markets the vehicle, shall be attributed to the manufacturer which markets the vehicle.

S6.1.6.2 A vehicle produced by more than one manufacturer shall be attributed to any one of the vehicle's manufacturers specified by an express written contract, reported to the National Highway Traffic Safety Administration under 49 CFR part 589, between the manufacturer so specified and the manufacturer to which the vehicle would otherwise be attributed under S6.1.6.1.

S6.2 *Vehicles manufactured on or after September 1, 2002.* Except as provided in S6.3, vehicles manufactured on or after September 1, 2002 shall, when tested under the conditions of S8, comply with the requirements specified in S7 at the target locations specified in S10 when impacted by the free motion headform specified in S8.9 at any speed up to and including 24 kilometers per hour. The requirements do not apply to any target that cannot be located using the procedures of S10.

S6.3 A vehicle need not meet the requirements of S6.1 through S6.2 for:

(a) Any target located on a convertible roof frame or a convertible roof linkage mechanism.

(b) Any target located rearward of a vertical plane 600 mm behind the seating reference point of the rearmost designated seating position.

(c) Any target located rearward of a vertical plane 600 mm behind the seating reference point of the driver's seating position in an ambulance or a motor home.

(d) Any target in a walk-in van-type vehicles.

S7 *Performance Criterion.* The HIC(d) shall not exceed 1000 when calculated in accordance with the following formula:

(a) HIC(d) = 0.75446 (free motion headform HIC) + 166.4.

(b) The free motion headform HIC is calculated in accordance with the following formula:

$$\left[\frac{1}{(t_2 - t_1)}\int_{t_1}^{t_2} a\,dt\right]^{2.5}(t_2 - t_1)$$

Where the term *a* is the resultant acceleration expressed as a multiple of *g* (the acceleration of gravity), and t1 and t2 are any two points in time during the impact which are separated by not more than a 36 millisecond time interval.

S8 *Target location and test conditions.* The vehicle shall be tested and the targets specified in S10 located under the following conditions.

S8.1 *Vehicle test attitude.*

(a) The vehicle is supported off its suspension at an attitude determined in accordance with S8.1(b).

(b) Directly above each wheel opening, determine the vertical distance between a level surface and a standard reference point on the test vehicle's body under the conditions of S8.1(b)(1) through S8.1(b)(3).

(1) The vehicle is loaded to its unloaded vehicle weight, plus its rated cargo and luggage capacity or 136 kg, whichever is less, secured in the luggage area. The load placed in the cargo area is centered over the longitudinal centerline of the vehicle.

(2) The vehicle is filled to 100 percent of all fluid capacities.

(3) All tires are inflated to the manufacturer's specifications listed on the vehicle's tire placard.

S8.2 *Windows and Sunroofs.*

(a) Movable vehicle windows are placed in the fully open position.

(b) For testing, any window on the opposite side of the longitudinal centerline of the vehicle from the target to be impacted may be removed.

(c) For testing, movable sunroofs are placed in the fully open position.

S8.3 *Convertible tops.* The top, if any, of convertibles and open-body type vehicles is in the closed passenger compartment configuration.

S8.4 *Doors.*

(a) Except as provided in S8.4(b) or S8.4(c), doors, including any rear hatchback or tailgate, are fully closed and latched but not locked.

(b) During testing, any side door on the opposite side of the longitudinal centerline of the vehicle from the target to be impacted may be open or removed.

(c) During testing, any rear hatchback or tailgate may be open or removed for testing any target except targets on the rear header, rearmost pillars, or the rearmost other side rail on either side of the vehicle.

S8.5 *Sun visors.* Each sun visor shall be placed in any position where one side of the visor is in contact with the vehicle interior surface (windshield, side rail, front header, roof, etc.).

S8.6 *Steering wheel and seats.*

(a) During targeting, the steering wheel and seats may be placed in any position intended for use while the vehicle is in motion.

(b) During testing, the steering wheel and seats may be removed from the vehicle.

S8.7 *Seat belt anchorages.* If a target is on a seat belt anchorage, and if the seat belt anchorage is adjustable, tests are conducted with the anchorage adjusted to a point midway between the two extreme adjustment positions. If the anchorage has distinct adjustment positions, none of which is midway between the two extreme positions, tests are conducted with the anchorage adjusted to the nearest position above the midpoint of the two extreme positions.

S8.8 *Temperature and humidity.*

(a) The ambient temperature is between 19 degrees C. and 26 degrees C., at any relative humidity between 10 percent and 70 percent.

(b) Tests are not conducted unless the headform specified in S8.9 is exposed to the conditions specified in S8.8(a) for a period not less than four hours.

S8.9 *Headform.* The headform used for testing conforms to the specifications of part 572, subpart L of this chapter.

S8.10 *Forehead impact zone.* The forehead impact zone of the headform is determined according to the procedure specified in (a) through (f).

(a) Position the headform so that the baseplate of the skull is horizontal. The midsagittal plane of the headform is designated as Plane S.

(b) From the center of the threaded hole on top of the headform, draw a 69 mm line forward toward the forehead, coincident with Plane S, along the contour of the outer skin of the headform. The front end of the line is designated as Point P. From Point P, draw a 100 mm line forward toward the forehead, coincident with Plane S, along the contour of the outer skin of the headform. The front end of the line is designated as Point O.

(c) Draw a 125 mm line which is coincident with a horizontal plane along the contour of the outer skin of the forehead from left to right through Point O so that the line is bisected at Point O.

The end of the line on the left side of the headform is designated as Point a and the end on the right as Point b.

(d) Draw another 125 mm line which is coincident with a vertical plane along the contour of the outer skin of the forehead through Point P so that the line is bisected at Point P. The end of the line on the left side of the headform is designated as Point c and the end on the right as Point d.

(e) Draw a line from Point a to Point c along the contour of the outer skin of the headform using a flexible steel tape. Using the same method, draw a line from Point b to Point d.

(f) The forehead impact zone is the surface area on the FMH forehead bounded by lines a-O-b and c-P-d, and a-c and b-d.

S8.11 *Target circle.* The area of the vehicle to be impacted by the headform is marked with a solid circle 12.7 mm in diameter, centered on the targets specified in S10, using any transferable opaque coloring medium.

S8.12 *Location of head center of gravity.*

(a) *Location of head center of gravity for front outboard designated seating positions (CG–F).* For determination of head center of gravity, all directions are in reference to the seat orientation.

(1) *Location of rearmost CG–F (CG–F2).* For front outboard designated seating positions, the head center of gravity with the seat in its rearmost adjustment position (CG–F2) is located 160 mm rearward and 660 mm upward from the seating reference point.

(2) *Location of forwardmost CG–F (CG–F1).* For front outboard designated seating positions, the head center of gravity with the seat in its forwardmost adjustment position (CG–F1) is located horizontally forward of CG–F2 by the distance equal to the fore-aft distance of the seat track.

(b) *Location of head center of gravity for rear outboard designated seating positions (CG–R).* For rear outboard designated seating positions, the head center of gravity (CG–R) is located 160 mm rearward, relative to the seat orientation, and 660 mm upward from the seating reference point.

S8.13 *Impact configuration.*

S8.13.1 The headform is launched from any location inside the vehicle which meets the conditions of S8.13.4. At the time of launch, the midsagittal plane of the headform is vertical and the headform is upright.

S8.13.2 The headform travels freely through the air, along a velocity vector that is perpendicular to the headform's skull cap plate, not less than 25 mm before making any contact with the vehicle.

S8.13.3 At the time of initial contact between the headform and the vehicle interior surface, some portion of the forehead impact zone of the headform contacts some portion of the target circle.

S8.13.4 *Approach Angles.* The headform launching angle is as specified in Table 1. For components for which Table 1 specifies a range of angles, the headform launching angle is within the limits determined using the procedures specified in S8.13.4.1 and S8.13.4.2, and within the range specified in Table I, using the orthogonal reference system specified in S9.

TABLE 1.—APPROACH ANGLE LIMITS

[In degrees]

Target component	Horizontal angle	Vertical angle
Front Header	180	0–50
Rear Header	0 or 360	0–50
Left Side Rail	270	0–50
Right Side Rail	90	0–50
Left Sliding Door Track.	270	0–50
Right Sliding Door Track.	90	0–50
Left A-Pillar	195–255	−5–50
Right A-Pillar	105–165	−5–50
Left B-Pillar	195–345	−10–50
Right B-Pillar	15–165	−10–50
Other Left Pillars	270	−10–50
Other Right Pillars	90	−10–50
Left Rearmost Pillar	270–345	−10–50
Right Rearmost Pillar	15–90	−10–50
Upper Roof	Any	0–50
Overhead Rollbar	0 or 180	0–50
Brace or Stiffener	90 or 270	0–50
Seat Belt Anchorages	Any	0–50

S8.13.4.1 *Horizontal Approach Angles for Headform Impacts.*

(a) *Left A-Pillar Horizontal Approach Angles.*

(1) Locate a line formed by the shortest horizontal distance between CG–F1 for the left seat and the right A-pillar. The maximum horizontal approach angle for the left A-pillar equals 360 degrees minus the angle formed by that line and the X-axis of the vehicle, measured counterclockwise.

(2) Locate a line formed by the shortest horizontal distance between CG–F2 for the left seat and the left A-pillar. The minimum horizontal approach angle for the left A-pillar impact equals the angle formed by that line and the X-axis of the vehicle, measured counterclockwise.

(b) *Right A-Pillar Horizontal Approach Angles.*

(1) Locate a line formed by the shortest horizontal distance between CG–F1 for the right seat and the left A-pillar. The minimum horizontal approach angle for the right A-pillar equals 360 degrees minus the angle formed by that line and the X-axis of the vehicle, measured counterclockwise.

(2) Locate a line formed by the shortest horizontal distance between CG–F2 for the right seat and the right A-pillar. The maximum horizontal approach angle for the right A-pillar impact equals the angle formed by that line and the X-axis of the vehicle measured counterclockwise.

(c) *Left B-Pillar Horizontal Approach Angles.*

(1) Locate a line formed by the shortest horizontal distance between CG–F2 for the left seat and the left B-pillar. The maximum horizontal approach angle for the left B-pillar equals the angle formed by that line and the X-axis of the vehicle measured counterclockwise, or 270 degrees, whichever is greater.

(2) Locate a line formed by the shortest horizontal distance between CG–R for the left seat and the left B-pillar. The minimum horizontal approach angle for the left B-pillar equals the angle formed by that line and the X-axis of the vehicle measured counterclockwise.

(d) *Right B-Pillar Horizontal Approach Angles.*

(1) Locate a line formed by the shortest horizontal distance between CG–F2 for the right seat and the right B-pillar. The minimum horizontal approach angle for the right B-pillar equals the angle formed by that line and the X-axis of the vehicle measured counterclockwise, or 90 degrees, whichever is less.

(2) Locate a line formed by the shortest horizontal distance between CG–R for the right seat and the right B-pillar. The maximum horizontal approach angle for the right B-pillar equals the angle between that line and the X-axis of the vehicle measured counterclockwise.

S8.13.4.2 *Vertical Approach Angles*

(a) Position the forehead impact zone in contact with the selected target at the prescribed horizontal approach angle. If a range of horizontal approach angles is prescribed, position the forehead impact zone in contact with the selected target at any horizontal approach angle within the range which may be used for testing.

(b) Keeping the forehead impact zone in contact with the target, rotate the FMH upward until the lip, chin or other part of the FMH contacts the component or other portion of the vehicle interior.

(1) Except as provided in S8.13.4.2(b)(2), keeping the forehead impact zone in contact with the target, rotate the FMH downward by 5 degrees

for each target to determine the maximum vertical angle.

(2) For all pillars except A-Pillars, keeping the forehead impact zone in contact with the target, rotate the FMH downward by 10 degrees for each target to determine the maximum vertical angle.

S8.14 *Multiple impacts.*

(a) A vehicle being tested may be impacted multiple times, subject to the limitations in S8.14 (b) and (c).

(b) As measured as provided in S8.14(d), impacts within 300 mm of each other may not occur less than 30 minutes apart.

(c) As measured as provided in S8.14(d), no impact may occur within 150 mm of any other impact.

(d) For S8.14(b) and S8.14(c), the distance between impacts is the distance between the centers of the target circle specified in S8.11 for each impact, measured along the vehicle interior.

S8.15 *Upper Roof.* The upper roof of a vehicle is determined according to the procedure specified in S8.15 (a) through (h).

(a) Locate the transverse vertical plane A at the forwardmost point where it contacts the interior roof (including trim) at the vehicle centerline.

(b) Locate the transverse vertical plane B at the rearmost point where it contacts the interior roof (including trim) at the vehicle centerline.

(c) Measure the horizontal distance (D1) between Plane A and Plane B.

(d) Locate the vertical longitudinal plane C at the leftmost point at which a vertical transverse plane, located 300 mm rearward of the A-pillar reference point described in S10.1(a), contacts the interior roof (including trim).

(e) Locate the vertical longitudinal plane D at the rightmost point at which a vertical transverse plane, located 300 mm rearward of the A-pillar reference point described in S10.1(a), contacts the interior roof (including trim).

(f) Measure the horizontal distance (D2) between Plane C and Plane D.

(g) Locate a point (Point M) on the interior roof surface, midway between Plane A and Plane B along the vehicle longitudinal centerline.

(h) The upper roof zone is the area of the vehicle upper interior surface bounded by the four planes described in S8.15(h)(1) and S8.15(h)(2):

(1) A transverse vertical plane E located at a distance of (.35 D1) forward of Point M and a transverse vertical plane F located at a distance of (.35 D1) rearward of Point M, measured horizontally.

(2) A longitudinal vertical plane G located at a distance of (.35 D2) to the left of Point M and a longitudinal vertical plane H located at a distance of (.35 D2) to the right of Point M, measured horizontally.

S9. *Orthogonal Reference System.* The approach angles specified in S8.13.4 are determined using the reference system specified in S9.1 through S9.4.

S9.1 An orthogonal reference system consisting of a longitudinal X axis and a transverse Y axis in the same horizontal plane and a vertical Z axis through the intersection of X and Y is used to define the horizontal direction of approach of the headform. The X–Z plane is the vertical longitudinal zero plane and is parallel to the longitudinal centerline of the vehicle. The X–Y plane is the horizontal zero plane parallel to the ground. The Y–Z plane is the vertical transverse zero plane that is perpendicular to the X–Y and X–Z planes. The X coordinate is negative forward of the Y–Z plane and positive to the rear. The Y coordinate is negative to the left of the X–Z plane and positive to the right. The Z coordinate is negative below the X–Y plane and positive above it. (See Figure 1.)

S9.2 The origin of the reference system is the center of gravity of the headform at the time immediately prior to launch for each test.

S9.3 The horizontal approach angle is the angle between the X axis and the headform impact velocity vector projected onto the horizontal zero plane, measured in the horizontal zero plane in the counter-clockwise direction. A 0 degree horizontal vector and a 360 degree horizontal vector point in the positive X direction; a 90 degree horizontal vector points in the positive Y direction; a 180 degree horizontal vector points in the negative X direction; and a 270 horizontal degree vector points in the negative Y direction. (See Figure 2.)

S9.4 The vertical approach angle is the angle between the horizontal plane and the velocity vector, measured in the midsagittal plane of the headform. A 0 degree vertical vector in Table I coincides with the horizontal plane and a vertical vector of greater than 0 degrees in Table I makes a upward angle of the same number of degrees with that plane.

S10 *Target Locations.*

(a) The target locations specified in S10.1 through S10.13 are located on both sides of the vehicle and, except as specified in S10(b), are determined using the procedures specified in those paragraphs.

(b) Except as specified in S10(c), if there is no combination of horizontal and vertical angles specified in S8.13.4 at which the forehead impact zone of free motion headform can contact one of the targets located using the procedures in S10.1 through S10.13, the center of that target is moved to any location within a sphere with a radius of 25 mm, centered on the center of the original target and measured along the vehicle interior, which the forehead impact zone can contact at one or more combination of angles.

(c) If there is no point within the sphere specified in S10(b) which the forehead impact zone of the free motion headform can contact at one or more combination of horizontal and vertical angles specified in S8.13.4, the radius of the sphere is increased by 25 mm increments until the sphere contains at least one point that can be contacted at one or more combination of angles.

S10.1 *A-pillar targets*

(a) *A-pillar reference point and target AP1.* On the vehicle exterior, locate a transverse vertical plane (Plane 1) which contacts the rearmost point of the windshield trim. The intersection of Plane 1 and the vehicle exterior surface is Line 1. Measuring along the vehicle exterior surface, locate a point (Point 1) on Line 1 that is 125 mm inboard of the intersection of Line 1 and a vertical plane tangent to the vehicle at the outboardmost point on Line 1 with the vehicle side door open. Measuring along the vehicle exterior surface in a longitudinal vertical plane (Plane 2) passing through Point 1, locate a point (Point 2) 50 mm rearward of Point 1. Locate the A-pillar reference point (Point APR) at the intersection of the interior roof surface and a line that is perpendicular to the vehicle exterior surface at Point 2. Target AP1 is located at point APR.

(b) *Target AP2.* Locate the horizontal plane (Plane 3) which intersects point APR. Locate the horizontal plane (Plane 4) which is 88 mm below Plane 3. Target AP2 is the point in Plane 4 and on the A-pillar which is closest to CG–F2 for the nearest seating position.

(c) *Target AP3.* Locate the horizontal plane (Plane 5) containing the highest point at the intersection of the dashboard and the A-pillar. Locate a horizontal plane (Plane 6) half-way between Plane 3 and Plane 5. Target AP3 is the point on Plane 6 and the A-pillar which is closest to CG–F1 for the nearest seating position.

S10.2 *B-pillar targets.*

(a) *B-pillar reference point and target BP1.* Locate the point (Point 3) on the vehicle interior at the intersection of the horizontal plane passing through the highest point of the forwardmost door opening and the centerline of the width of the B-pillar, as viewed laterally. Locate a transverse vertical plane (Plane

7) which passes through Point 3. Locate the point (Point 4) at the intersection of the interior roof surface, Plane 7, and the plane, described in S8.15(h), defining the nearest edge of the upper roof. The B-pillar reference point (Point BPR) is the point located at the middle of the line from Point 3 to Point 4 in Plane 7, measured along the vehicle interior surface. Target BP1 is located at Point BPR.

(b) *Target BP2*. If a seat belt anchorage is located on the B-pillar, Target BP2 is located at any point on the anchorage.

(c) *Target BP3*. Target BP3 is located in accordance with this paragraph. Locate a horizontal plane (Plane 8) which intersects Point BPR. Locate a horizontal plane (Plane 9) which passes through the lowest point of the daylight opening forward of the pillar. Locate a horizontal plane (Plane 10) half-way between Plane 8 and Plane 9. Target BP3 is the point located in Plane 10 and on the interior surface of the B-pillar, which is closest to CG–F(2) for the nearest seating position.

(d) *Target BP4*. Locate a horizontal plane (Plane 11) half-way between Plane 9 and Plane 10. Target BP4 is the point located in Plane 11 and on the interior surface of the B-pillar which is closest to CG–R for the nearest seating position.

S10.3 *Other pillar targets*.

(a) *Target OP1*.

(1) Except as provided in S10.3(a)(2), target OP1 is located in accordance with this paragraph. Locate the point (Point 5), on the vehicle interior, at the intersection of the horizontal plane through the highest point of the highest adjacent door opening or daylight opening (if no adjacent door opening) and the centerline of the width of the other pillar, as viewed laterally. Locate a transverse vertical plane (Plane 12) passing through Point 5. Locate the point (Point 6) at the intersection of the interior roof surface, Plane 12 and the plane, described in S8.15(h), defining the nearest edge of the upper roof. The other pillar reference point (Point OPR) is the point located at the middle of the line between Point 5 and Point 6 in Plane 12, measured along the vehicle interior surface. Target OP1 is located at Point OPR.

(2) If a seat belt anchorage is located on the pillar, Target OP1 is any point on the anchorage.

(b) *Target OP2*. Locate the horizontal plane (Plane 13) intersecting Point OPR. Locate a horizontal plane (Plane 14) passing through the lowest point of the daylight opening forward of the pillar. Locate a horizontal plane (Plane 15) half-way between Plane 13 and Plane 14. Target OP2 is the point located on the interior surface of the pillar at the intersection of Plane 15 and the centerline of the width of the pillar, as viewed laterally.

S10.4 *Rearmost pillar targets*

(a) *Rearmost pillar reference point and target RP1*. Locate the point (Point 7) at the corner of the upper roof nearest to the pillar. The distance between Point M, as described in S8.15(g), and Point 7, as measured along the vehicle interior surface, is D. Extend the line from Point M to Point 7 along the vehicle interior surface in the same vertical plane by (3*D/7) beyond Point 7 or until the edge of a daylight opening, whichever comes first, to locate Point 8. The rearmost pillar reference point (Point RPR) is at the midpoint of the line between Point 7 and Point 8, measured along the vehicle interior. Target RP1 is located at Point RPR.

(b) *Target RP2*.

(1) Except as provided in S10.4(b)(2), target RP2 is located in accordance with this paragraph. Locate the horizontal plane (Plane 16) through Point RPR. Locate the horizontal plane (Plane 17) 150 mm below Plane 16. Target RP2 is located in Plane 17 and on the pillar at the location closest to CG–R for the nearest designated seating position.

(2) If a seat belt anchorage is located on the pillar, Target RP2 is any point on the anchorage.

S10.5 *Front header targets*.

(a) *Target FH1*. Locate the contour line (Line 2) on the vehicle interior trim which passes through the APR and is parallel to the contour line (Line 3) at the upper edge of the windshield on the vehicle interior. Locate the point (Point 9) on Line 2 that is 125 mm inboard of the APR, measured along that line. Locate a longitudinal vertical plane (Plane 18) that passes through Point 9. Target FH1 is located at the intersection of Plane 18 and the upper vehicle interior, halfway between a transverse vertical plane (Plane 19) through Point 9 and a transverse vertical plane (Plane 20) through the intersection of Plane 18 and Line 3.

(b) *Target FH2*.

(1) Except as provided in S10.5(b)(2), target FH2 is located in accordance with this paragraph. Locate a point (Point 10) 275 mm inboard of Point APR, along Line 2. Locate a longitudinal vertical plane (Plane 21) that passes through Point 10. Target FH2 is located at the intersection of Plane 21 and the upper vehicle interior, halfway between a transverse vertical plane (Plane 22) through Point 10 and a transverse vertical plane (Plane 23) through the intersection of Plane 21 and Line 3.

(2) If a sun roof opening is located forward of the front edge of the upper roof and intersects the mid-sagittal plane of a dummy seated in either front outboard seating position, target FH2 is the nearest point that is forward of a transverse vertical plane (Plane 24) through CG–F(2) and on the intersection of the mid-sagittal plane and the interior sunroof opening.

S10.6 *Targets on the side rail between the A-pillar and the B-pillar or rearmost pillar in vehicles with only two pillars on each side of the vehicle*.

(a) *Target SR1*. Locate a transverse vertical plane (Plane 25) 150 mm rearward of Point APR. Locate the point (Point 11) at the intersection of Plane 25 and the upper edge of the forwardmost door opening. Locate the point (Point 12) at the intersection of the interior roof surface, Plane 25 and the plane, described in S8.15(h), defining the nearest edge of the upper roof. Target SR1 is located at the middle of the line between Point 11 and Point 12 in Plane 25, measured along the vehicle interior.

(b) *Target SR2*. Locate a transverse vertical plane (Plane 26) 300 mm rearward of the APR or 300 mm forward of the BPR (or the RPR in vehicles with no B-pillar). Locate the point (Point 13) at the intersection of Plane 26 and the upper edge of the forwardmost door opening. Locate the point (Point 14) at the intersection of the interior roof surface, Plane 26 and the plane, described in S8.15(h), defining the nearest edge of the upper roof. Target SR2 is located at the middle of the line between Point 13 and Point 14 in Plane 26, measured along the vehicle interior.

S10.7 *Other side rail target (target SR3)*.

(a) Except as provided in S10.7(b), target SR3 is located in accordance with this paragraph. Locate a transverse vertical plane (Plane 27) 150 mm rearward of either Point BPR or Point OPR. Locate the point (Point 15) as provided in either S10.7(a)(1) or S10.7(a)(2), as appropriate. Locate the point (Point 16) at the intersection of the interior roof surface, Plane 27 and the plane, described in S8.15(h), defining the nearest edge of the upper roof. Target SR3 is located at the middle of the line between Point 15 and Point 16 in Plane 27, measured along the vehicle interior surface.

(1) If Plane 27 intersects a door or daylight opening, the Point 15 is located at the intersection of Plane 27 and the upper edge of the door opening or daylight opening.

(2) If Plane 27 does not intersect a door or daylight opening, the Point 15 is located on the vehicle interior at the intersection of Plane 27 and the horizontal plane through the highest point of the door or daylight opening nearest Plane 27. If the adjacent door(s)

or daylight opening(s) are equidistant to Plane 27, Point 15 is located on the vehicle interior at the intersection of Plane 27 and either horizontal plane through the highest point of each door or daylight opening.

(b) Except as provided in S10.7(c), if a grab handle is located on the side rail, target SR3 is located at any point on the anchorage of the grab-handle. Folding grab-handles are in their stowed position for testing.

(c) If a seat belt anchorage is located on the side rail, target SR3 is located at any point on the anchorage.

S10.8 *Rear header target (target RH).* Locate the point (Point 17) at the intersection of the surface of the upper vehicle interior, the mid-sagittal plane (Plane 28) of the outboard rearmost dummy and the plane, described in S8.15(h), defining the rear edge of the upper roof. Locate the point (Point 18) as provided in S10.8(a) or S10.8(b), as appropriate. Except as provided in S10.8(c), Target RH is located at the mid-point of the line that is between Point 17 and Point 18 and is in Plane 28, as measured along the surface of the vehicle interior.

(a) If Plane 28 intersects a rear door opening or daylight opening, then Point 18 is located at the intersection of Plane 28 and the upper edge of the door opening or the daylight opening (if no door opening).

(b) If Plane 28 does not intersect a rear door opening or daylight opening, then Point 18 is located on the vehicle interior at the intersection of Plane 28 and a horizontal plane through the highest point of the door or daylight opening nearest to Plane 28. If the adjacent door(s) or daylight opening(s) are equidistant to Plane 28, Point 18 is located on the vehicle interior at the intersection of Plane 28 and either horizontal plane through the highest point of each door or daylight opening.

(c) If Target RH is more than 112 mm from Point 18 on the line that is between Point 17 and Point 18 and is in Plane 28, as measured along the surface of the vehicle interior, then Target RH is the point on that line which is 112 mm from Point 18.

S10.9 *Upper roof target (target UR).* Target UR is any point on the upper roof.

S10.10 *Sliding door track target (target SD).* Locate the transverse vertical plane (Plane 29) passing through the middle of the widest opening of the sliding door, measured horizontally and parallel to the vehicle longitudinal centerline. Locate the point (Point 19) at the intersection of the surface of the upper vehicle interior, Plane 29 and the plane, described in S8.15(h), defining the nearest edge of the upper roof. Locate the point (Point 20) at the intersection of Plane 29 and the upper edge of the sliding door opening. Target SD is located at the middle of the line between Point 19 and Point 20 in Plane 29, measured along the vehicle interior.

S10.11 *Roll-bar targets.*

(a) *Target RB1.* Locate a longitudinal vertical plane (Plane 30) at the mid-sagittal plane of a dummy seated in any outboard designated seating position. Target RB1 is located on the roll-bar and in Plane 30 at the location closest to either CG–F2 or CG–R, as appropriate, for the same dummy.

(b) *Target RB2.* If a seat belt anchorage is located on the roll-bar, Target RB2 is any point on the anchorage.

S10.12 *Stiffener targets.*

(a) *Target ST1.* Locate a transverse vertical plane (Plane 31) containing either CG–F2 or CG–R, as appropriate, for any outboard designated seating position. Target ST1 is located on the stiffener and in Plane 31 at the location closest to either CG–F2 or CG–R, as appropriate.

(b) *Target ST2.* If a seat belt anchorage is located on the stiffener, Target ST2 is any point on the anchorage.

S10.13 *Brace target (target BT)* Target BT is any point on the width of the brace as viewed laterally from inside the passenger compartment.

BILLING CODE 4910–59–P

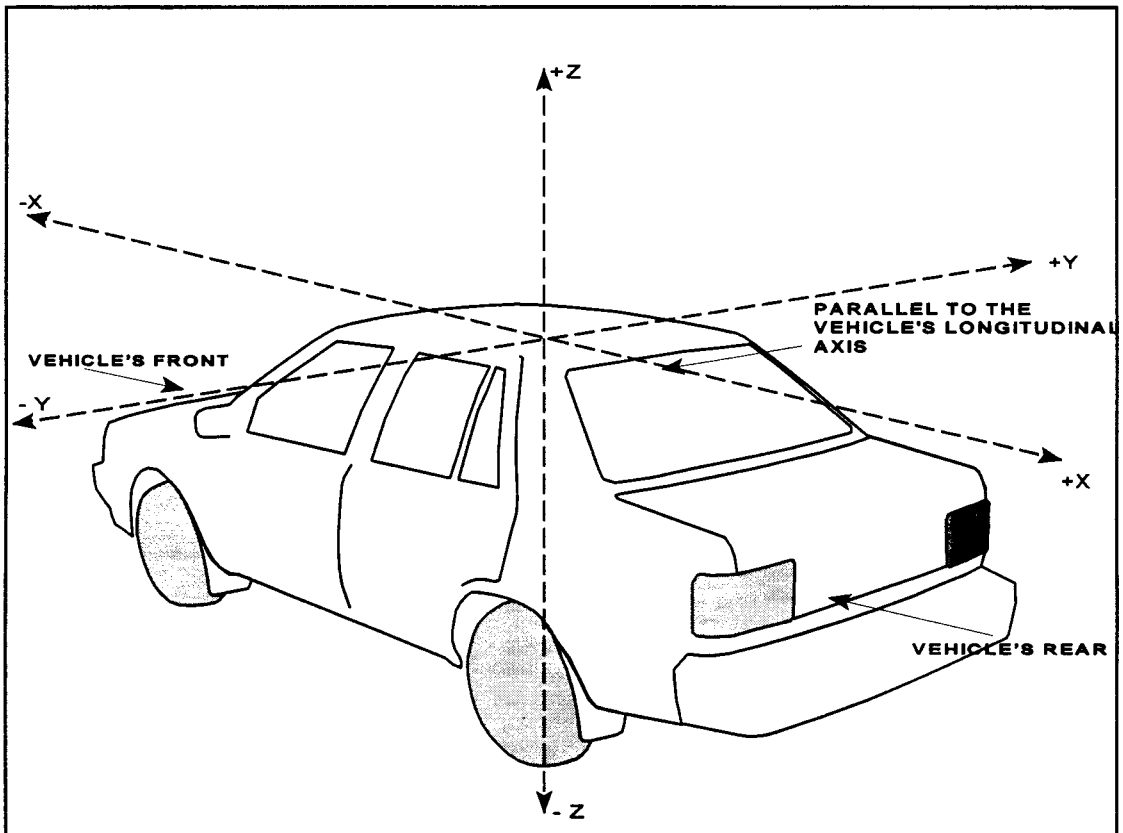

FIGURE 1 - ORTHOGONAL REFERENCE SYSTEM

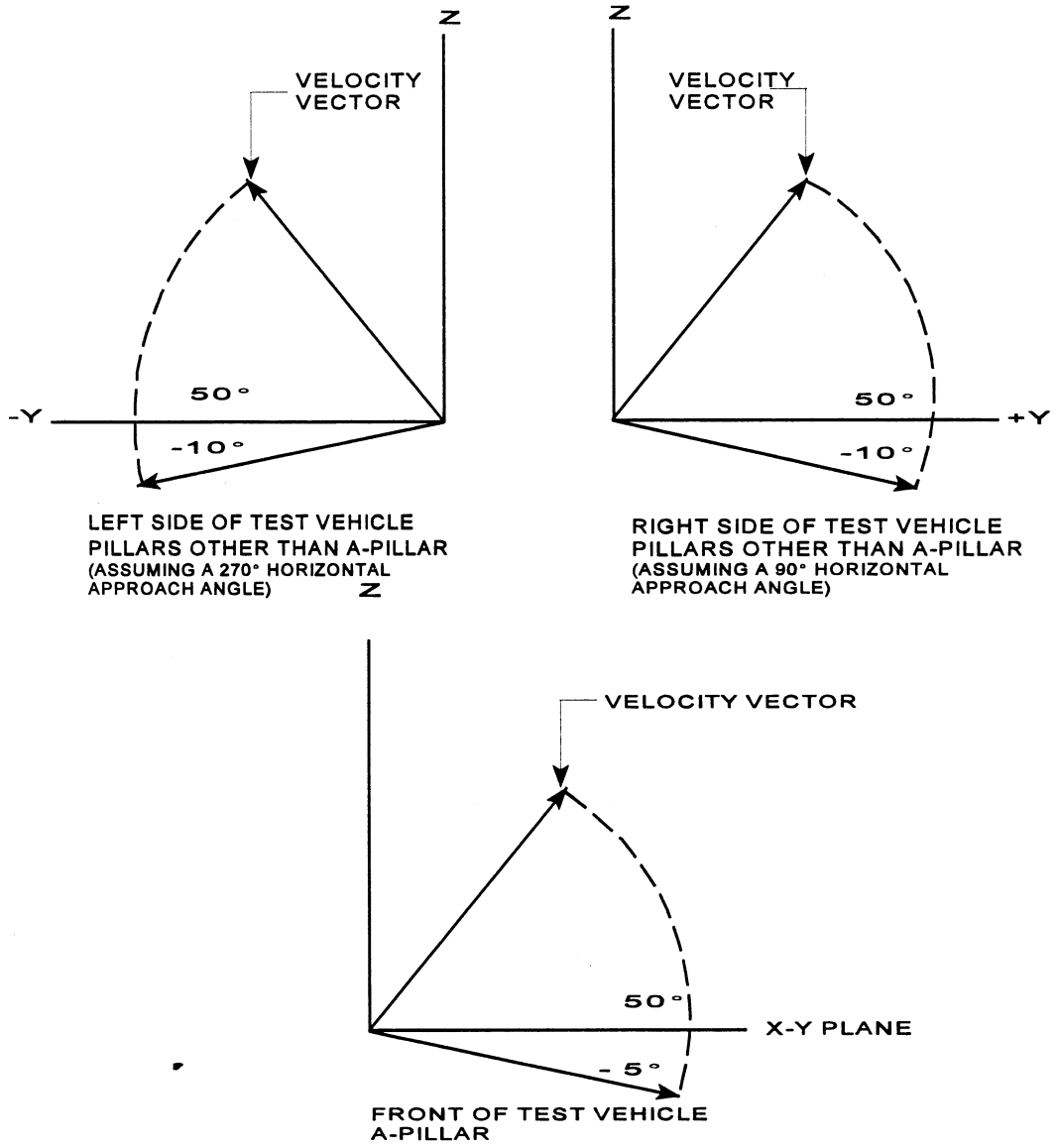

VERTICAL AND HORIZONTAL APPROACH ANGLE PLANE
FIGURE 2

BILLING CODE 4910–59–C

PART 589—[AMENDED]

3. The authority citation for Part 589 continues to read as follows:

Authority: 15 U.S.C. 1392, 1401, 1407; delegation of authority at 49 CFR 1.50.

4. Section 589.1 is revised to read as follows:

§ 589.1 Scope.

This part establishes requirements for manufacturers of passenger cars and trucks and multipurpose passenger vehicles with a gross vehicle weight rating of 4,536 kilograms or less and buses with a gross vehicle weight rating of 3,860 kilograms or less to respond to NHTSA inquiries, to submit a report, and maintain records related to the report, concerning the number of such vehicles that meet the upper interior component head impact protection requirements of Standard No. 201, *Occupant protection in interior impact* (49 CFR 571.201).

5. Section 589.2 is revised to read as follows:

§ 589.2 Purpose.

This purpose of these reporting requirements is to aid the National Highway Traffic Safety Administration in determining whether a manufacturer of passenger cars and trucks and multipurpose passenger vehicles with a gross vehicle weight rating of 4,536 kilograms or less and buses with a gross vehicle weight rating of 3,860 kilograms or less has complied with the upper interior component head impact protection requirements of Standard No. 201.

6. Section 589.3 is revised to read as follows:

§ 589.3 Applicability.

This part applies to manufacturers of passenger cars and trucks and multipurpose passenger vehicles with a gross vehicle weight rating of 4,536 kilograms or less and buses with a gross vehicle weight rating of 3,860 kilograms or less. However, this part does not apply to any manufacturers whose production consists exclusively of walk-in vans, vehicles manufactured in two or more stages, and vehicles that are altered after previously having been certified in accordance with part 567 of this chapter.

7. Section 589.5 is revised to read as follows:

§ 589.5 Response to inquiries.

During the production years ending August 31, 1999, August 31, 2000, August 31, 2001, and August 31, 2002, each manufacturer shall, upon request from the Office of Vehicle Safety Compliance, provide information regarding which vehicle make/models are certified as complying with the requirements of S6 of Standard No. 201.

8. Part 589.6 is revised to read as follows:

§ 589.6 Reporting requirements.

(a) *Phase-in selection reporting requirement.* Within 60 days after the end of the production year ending August 31, 1999, each manufacturer choosing to comply with one of the phase-in schedules permitted by S6.1 of 49 CFR 571.201 shall submit a report to the National Highway Traffic Safety Administration stating which phase-in schedule it will comply with until September 1, 2002. Each report shall—

(1) Identify the manufacturer;

(2) State the full name, title, and address of the official responsible for preparing the report;

(3) Identify the section number for the phase-in schedule selected;

(4) Be written in the English language; and

(5) Be submitted to: Administrator, National Highway Traffic Safety Administration, 400 Seventh Street, SW, Washington, DC 20590.

(b) *General reporting requirements.* Within 60 days after the end of the production years ending August 31, 1999, August 31, 2000, August 31, 2001, and August 31, 2002, each manufacturer shall submit a report to the National Highway Traffic Safety Administration concerning its compliance with the upper interior component head impact protection requirements of Standard No. 201 for its passenger cars, trucks, buses and multipurpose passenger vehicles produced in that year. Each report shall—

(1) Identify the manufacturer;

(2) State the full name, title, and address of the official responsible for preparing the report;

(3) Identify the production year being reported on;

(4) Contain a statement regarding whether or not the manufacturer complied with the upper interior component head impact protection requirements of the amended Standard No. 201 for the period covered by the report and the basis for that statement;

(5) Provide the information specified in § 589.6(c);

(6) Be written in the English language; and

(7) Be submitted to: Administrator, National Highway Traffic Safety Administration, 400 Seventh Street, SW, Washington, DC 20590.

(c) *Report content*—(1) *Basis for phase-in production goals.* Each manufacturer shall provide the number of passenger cars and trucks and multipurpose passenger vehicles with a GVWR of 4,536 kilograms or less and buses with a GVWR of 3,860 kilograms or less manufactured for sale in the United States for each of the three previous production years, or, at the manufacturer's option, for the current production year. A new manufacturer that has not previously manufactured passenger cars and trucks and multipurpose passenger vehicles with a GVWR of 4,536 kilograms or less and buses with a GVWR of 3,860 kilograms or less for sale in the United States must report the number of such vehicles manufactured during the current production year. However, manufacturers are not required to report any information with respect to those vehicles that are walk-in van type vehicles, vehicles manufactured in two or more stages, and/or vehicles that are altered after previously having been certified in accordance with part 567 of this chapter.

(2) *Production.* Each manufacturer shall report for the production year for which the report is filed the number of passenger cars and multipurpose passenger vehicles and trucks with a GVWR of 4,536 kilograms or less and buses with a GVWR of 3,860 kilograms or less that meet the upper interior component head impact protection requirements (S6) of Standard No. 201.

(3) *Vehicles produced by more than one manufacturer.* Each manufacturer whose reporting of information is affected by one or more of the express written contracts permitted by S6.1.6.2 of Standard No. 201 shall:

(i) Report the existence of each contract, including the names of all parties to the contract, and explain how the contract affects the report being submitted.

(ii) Report the actual number of vehicles covered by each contract.

9. Section 589.7 is revised to read as follows:

§ 589.7 Records.

Each manufacturer shall maintain records of the Vehicle Identification Number for each passenger car, multipurpose passenger vehicle, truck and bus for which information is reported under § 589.6(c)(2) until December 31, 2003.

10. Section 589.8 is revised to read as follows:

§ 589.8 Petition to extend period to file report.

A petition for extension of the time to submit a report must be received not later than 15 days before expiration of the time stated in § 589.6(b). The

petition must be submitted to: Administrator, National Highway Traffic Safety Administration, 400 Seventh Street, SW, Washington, DC 20590. The filing of a petition does not automatically extend the time for filing a report. A petition will be granted only if the petitioner shows good cause for the extension, and if the extension is consistent with the public interest.

Issued on April 1, 1997.

Ricardo Martinez,

Administrator.

[FR Doc. 97–8826 Filed 4–7–97; 8:45 am]

BILLING CODE 4910–59–P

DEPARTMENT OF COMMERCE

National Oceanic and Atmospheric Administration

50 CFR Part 679

[Docket No. 961107312–7021–02; I.D. 040197D]

Fisheries of the Exclusive Economic Zone Off Alaska; Shortraker/Rougheye Rockfish in the Aleutian Islands Subarea

AGENCY: National Marine Fisheries Service (NMFS), National Oceanic and Atmospheric Administration (NOAA), Commerce.

ACTION: Prohibition of Retention.

SUMMARY: NMFS is prohibiting retention of shortraker/rougheye rockfish in the Aleutian Islands subarea of the Bering Sea and Aleutian Islands management area (BSAI). NMFS is requiring that catches of species in the shortraker/rougheye rockfish group in this area be treated in the same manner as prohibited species and discarded at sea with a minimum of injury. This action is necessary because the shortraker/rougheye 1997 initial total allowable catch (ITAC) in this area has been reached.

EFFECTIVE DATE: 1200 hrs, Alaska local time (A.l.t.), April 2, 1997, through 2400 hrs, A.l.t., December 31, 1997.

FOR FURTHER INFORMATION CONTACT: Andrew N. Smoker, 907–586-7228.

SUPPLEMENTARY INFORMATION: The groundfish fishery in the BSAI exclusive economic zone is managed by NMFS according to the Fishery Management Plan for the Groundfish Fishery of the Bering Sea and Aleutian Islands Area (FMP) prepared by the North Pacific Fishery Management Council under authority of the Magnuson-Stevens Fishery Conservation and Management Act. Fishing by U.S. vessels is governed by regulations implementing the FMP at subpart H of 50 CFR part 600 and 50 CFR part 679.

In accordance with § 679.20(c)(3)(iii), the 1997 ITAC of shortraker/rougheye rockfish in the Aleutian Islands subarea was established by the Final 1997 Harvest Specifications of Groundfish for the BSAI (62 FR 7168, February 18, 1997) as 797 metric tons. The Administrator, Alaska Region, NMFS (Regional Administrator), determined that the ITAC amount specified for shortraker/rougheye rockfish in the Aleutian Islands subarea was necessary as incidental catch to support other anticipated groundfish fisheries and, therefore, NMFS prohibited directed fishing effective February 12, 1997. The closure action was published in the Final 1997 Harvest Specifications document.

In accordance with § 679.20(d)(2), the Regional Administrator has determined that the 1997 ITAC for shortraker/rougheye rockfish in the Aleutian Islands subarea has been reached. Therefore, NMFS is requiring that further catches of shortraker/rougheye rockfish in the Aleutian Islands subarea be treated as prohibited species in accordance with § 679.21(b).

Classification

This action is required by § 679.20 and is exempt from review under E.O. 12866.

Authority: 16 U.S.C. 1801 *et seq.*

Dated: April 2, 1997.

Bruce Morehead,

Acting Director, Office of Sustainable Fisheries, National Marine Fisheries Service.

[FR Doc. 97–8858 Filed 4–12–97; 2:58 am]

BILLING CODE 3510–22–F

Proposed Rules

Federal Register
Vol. 62, No. 67
Tuesday, April 8, 1997

This section of the FEDERAL REGISTER contains notices to the public of the proposed issuance of rules and regulations. The purpose of these notices is to give interested persons an opportunity to participate in the rule making prior to the adoption of the final rules.

DEPARTMENT OF AGRICULTURE

Animal and Plant Health Inspection Service

7 CFR Part 319

[Docket No. 96–083–2]

Importation of Cotton and Cotton Products

AGENCY: Animal and Plant Health Inspection Service, USDA.

ACTION: Notice of reopening and extension of comment period.

SUMMARY: We are reopening and extending the comment period for our advance notice of proposed rulemaking that solicits public comment on whether and how our regulations for importing cotton (including seed cotton, cottonseed, cotton lint and linters, cottonseed products, and cotton waste) and cotton covers into the United States need to be changed. This reopening and extension will provide interested groups and individuals with additional time to prepare comments on the advance notice of proposed rulemaking.

DATES: Consideration will be given only to comments on Docket No. 96–083–1 that are received on or before April 30, 1997.

ADDRESSES: Please send an original and three copies of your comments to Docket No. 96–083–1, Regulatory Analysis and Development, PPD, APHIS, Suite 3C03, 4700 River Road, Unit 118, Riverdale, MD 20737–1238. Please state that your comments refer to Docket No. 96–083–1. Comments received may be inspected at USDA, room 1141, South Building, 14th Street and Independence Avenue SW., Washington, DC, between 8:00 a.m. and 4:30 p.m., Monday through Friday, except holidays. Persons wishing to inspect comments are requested to call ahead on (202) 690–2817 to facilitate entry into the comment reading room.

FOR FURTHER INFORMATION CONTACT: Mr. James Petit de Mange, Staff Officer, USDA–APHIS–PPQ–Phytosanitary Issues Management Team, 4700 River Road, Unit 140, Riverdale, Maryland 20737, Telephone: (301) 734–6799; FAX: (301) 734–5786; or E-mail: jpdmange@aphis.usda.gov.

SUPPLEMENTARY INFORMATION:

Background

On December 30, 1996, we published in the **Federal Register** (61 FR 68673–68674, Docket No. 96–083–1) an advance notice of proposed rulemaking for 7 CFR part 319 on whether and how our regulations for importing cotton (including seed cotton, cottonseed, cotton lint and linters, cottonseed products, and cotton waste) and cotton covers into the United States need to be changed.

Comments on the advance notice were required to be received on or before March 31, 1997. We have received a request from the National Cotton Council to extend the period during which comments will be accepted. In response, we are reopening and extending the comment period on Docket No. 96–083–1 for an additional 30 days. This action will allow the National Cotton Council and all other interested groups and individuals additional time to prepare and submit comments.

Authority: 7 U.S.C. 150dd, 150ee, 150ff, 151–167, 450, 2803, and 2809; 21 U.S.C. 136 and 136a; 7 CFR 2.22, 2.80, and 371.2(c).

Done in Washington, DC, this 1st day of April 1997.

Terry L. Medley,

Administrator, Animal and Plant Health Inspection Service.

[FR Doc. 97–8922 Filed 4–7–97; 8:45 am]

BILLING CODE 3410–34–P

DEPARTMENT OF AGRICULTURE

Agricultural Marketing Service

7 CFR Part 1137

[DA–97–02]

Milk in the Eastern Colorado Marketing Area; Proposed Suspension or Termination of Certain Provisions of the Order

AGENCY: Agricultural Marketing Service, USDA.

ACTION: Proposed suspension or termination of rule.

SUMMARY: This document invites written comments on a proposal to suspend indefinitely or terminate part of a provision in the Eastern Colorado milk order which specifies that a distributing plant disposing of ten percent or more of its Grade A milk receipts, or 12,000 pounds per day, whichever is less, as route disposition in the marketing area be considered a fully regulated pool plant. This request was submitted by Brown Swiss-Gillette Dairy, a handler operating a distributing plant that is partially regulated under 3 Federal milk orders. The handler contends that the action is necessary to assure equity among producers and competitiveness among handlers.

DATES: Comments must be submitted on or before May 8, 1997.

ADDRESSES: Comments (two copies) should be filed with the USDA/AMS/Dairy Division, Order Formulation Branch, Room 2971, South Building, P.O. Box 96456, Washington, DC 20090–6456. Advance, unofficial copies of such comments may be faxed to (202) 690–0552 or e-mailed to OFB—FMMO—Comments@usda.gov. Reference should be given to the title of action and docket number.

FOR FURTHER INFORMATION CONTACT: Constance M. Brenner, Marketing Specialist, USDA/AMS/Dairy Division, Order Formulation Branch, Room 2971, South Building, P.O. Box 96456, Washington, DC 20090–6456, (202) 720–2357, e-mail address: connie m brenner@usda.gov.

SUPPLEMENTARY INFORMATION: The Department is issuing this proposed rule in conformance with Executive Order 12866.

This proposed rule has been reviewed under Executive Order 12988, Civil Justice Reform. This rule is not intended to have a retroactive effect. If adopted, this proposed rule will not preempt any state or local laws, regulations, or policies, unless they present an irreconcilable conflict with the rule.

The Agricultural Marketing Agreement Act of 1937, as amended (7 U.S.C. 601–674), provides that administrative proceedings must be exhausted before parties may file suit in court. Under section 608c(15)(A) of the Act, any handler subject to an order may request modification or exemption from such order by filing with the Secretary a petition stating that the order, any provision of the order, or any obligation

imposed in connection with the order is not in accordance with law. A handler is afforded the opportunity for a hearing on the petition. After a hearing, the Secretary would rule on the petition. The Act provides that the district court of the United States in any district in which the handler is an inhabitant, or has its principal place of business, has jurisdiction in equity to review the Secretary's ruling on the petition, provided a bill in equity is filed not later than 20 days after the date of the entry of the ruling.

Small Business Consideration

In accordance with the Regulatory Flexibility Act (5 U.S.C. 601 *et seq.*), the Agricultural Marketing Service has considered the economic impact of this action on small entities and has certified that this proposed rule will not have a significant economic impact on a substantial number of small entities. For the purpose of the Regulatory Flexibility Act, a dairy farm is considered a ''small business'' if it has an annual gross revenue of less than $500,000, and a dairy products manufacturer is a ''small business'' if it has fewer than 500 employees. For the purposes of determining which dairy farms are ''small businesses,'' the $500,000 per year criterion was used to establish a production guideline of 326,000 pounds per month. Although this guideline does not factor in additional monies that may be received by dairy producers, it should be an inclusive standard for most ''small'' dairy farmers. For purposes of determining a handler's size, if the plant is part of a larger company operating multiple plants that collectively exceed the 500-employee limit, the plant will be considered a large business even if the local plant has fewer than 500 employees.

For the month of January 1997, the milk of 426 producers was pooled on the Eastern Colorado Federal milk order. Of these producers, 323 produced below the 326,000-pound production guideline and are considered as small businesses. A majority of these producers produce less than 100,000 pounds per month. Of the total number of producers whose milk was pooled during that month, 6 were non-member producers and 420 were members of either Mid-America Dairymen or Western Dairymen Cooperative Inc. For January 1997, 322 cooperative members and one non-member producer met the small business criterion.

For the month of January 1997, there were 10 handlers operating 11 plants pooled or regulated under the Eastern Colorado milk order. Of these handlers, half have 500 or fewer employees and qualify as small businesses.

Brown Swiss-Gillette Dairy (Gillette) receives its milk from Black Hills Milk Producers Cooperative. During the month of January 1997, 55 of the 58 producers supplying milk to Black Hills Milk Producers Cooperative would be considered small businesses.

This rule proposes to suspend or terminate part of a provision of the Eastern Colorado marketing order which makes a distributing plant disposing of ten percent or more of its Grade A receipts, or 12,000 pounds per day, whichever is less, as route disposition in a marketing area a fully regulated plant. The proposal would lessen the regulatory impact of the order on certain milk handlers and would not affect the price received by dairy farmers in Eastern Colorado. Handlers in the marketing area will continue to pay the minimum order prices to producers.

Interested parties are invited to submit comments on the probable regulatory and informational impact of this proposed rule on small entities. Also, parties may suggest modifications of this proposal for the purpose of tailoring their applicability to small businesses.

Notice is hereby given that, pursuant to the provisions of the Agricultural Marketing Agreement Act, the suspension or termination of the following provisions of the order regulating the handling of milk in the Eastern Colorado marketing area is being considered for an indefinite period:

In § 1137.7(a)(2), the words '', or 12,000 pounds per day, whichever is less,''.

All persons who want to submit written data, views or arguments about the proposed suspension or termination should send two copies of their views to the USDA/AMS/Dairy Division, Order Formulation Branch, Room 2971, South Building, P.O. Box 96456, Washington, DC 20090–6456, by the 30th day after publication of this notice in the **Federal Register**.

All written submissions made pursuant to this notice will be made available for public inspection in the Dairy Division during regular business hours (7 CFR 1.27(b)).

Statement of Consideration

The proposed rule would terminate or suspend indefinitely the portion of the Eastern Colorado Federal milk order's pool distributing plant definition that defines a plant with 12,000 pounds of route disposition per day in the marketing area as a fully regulated pool plant.

Pooling qualifications included in the Eastern Colorado order define a pool distributing plant as any plant in which during the month fluid milk products are processed or packaged and from which 10 percent or more of such receipts, or 12,000 pounds per day, whichever is less, are disposed of as route disposition in the marketing area.

Gillette requested the termination or suspension of the 12,000-pound limitation, contending that the limitation is unreasonable when considering the plant size which must be maintained in order for Gillette to survive financially and also maintain its status as a partially regulated plant. Gillette also states that the 12,000-pound limitation is unreasonable when compared to the amount of packaged products delivered in one truckload, which greatly exceeds this limitation. Gillette states that termination or suspension will assure equity among producers and competitiveness among handlers.

As part of the Federal Order Reform process, all aspects of Federal milk marketing orders are presently undergoing review, including the definition of a pool plant. The Department is accepting and will continue to accept comments from all interested parties throughout the reform process regarding any modifications to order provisions. Therefore, Gillette's proposal requesting an indefinite suspension or termination should prevent Gillette from becoming fully regulated at least until the conclusion of the reform period.

Accordingly, it may be appropriate to terminate or suspend indefinitely the aforesaid provisions.

List of Subjects in 7 CFR Part 1137

Milk marketing orders.

The authority citation for 7 CFR Part 1137 continues to read as follows:

Authority: 7 U.S.C. 601–674.

Dated: April 2, 1997.

Aggie Thompson,

Acting Director, Dairy Division.

[FR Doc. 97–8904 Filed 4–7–97; 8:45 am]

BILLING CODE 3410–02–P

DEPARTMENT OF ENERGY

Office of Energy Efficiency and Renewable Energy

10 CFR Part 430

RIN No. 1904–AA93

Energy Conservation Program for Consumer Products: Proposed Rule Adding Test Procedures for Externally Vented Refrigerators and Refrigerator-Freezers

AGENCY: Office of Energy Efficiency and Renewable Energy, Department of Energy.

ACTION: Proposed rule.

SUMMARY: The Department of Energy (Department or DOE) proposes test procedures for measuring the energy consumption of an externally vented refrigerator and externally vented refrigerator-freezer, a technological innovation which is not accommodated by the existing test procedures. Today's proposal would not change in any way the test procedures applicable to refrigerator and refrigerator-freezer designs without venting.

DATES: Written comments in response to this notice must be received by May 8, 1997. The Department requests 10 copies of the comments and, if possible, a computer disk. The Department is currently using WordPerfect™ 6.1.

ADDRESSES: Written comments are to be submitted to: U.S. Department of Energy, Office of Energy Efficiency and Renewable Energy, EE–43, Room 1J–018, ''Test Procedures for Refrigerators and Refrigerator-Freezers,'' Docket No. EE–RM–97–118, Forrestal Building, 1000 Independence Avenue, SW, Washington, DC 20585–0121. Telephone: (202) 586–7574. Comments may be hand delivered between the hours of 8:00 a.m. and 4:00 p.m., Monday through Friday, except Federal holidays. Comments should be labeled, ''Test Procedures for Refrigerators and Refrigerator-Freezers'' (Docket No. EE–RM–97–118), both on the document or computer disk and on the envelope. Copies of public comments received may be read and/or photocopied at the Department of Energy Freedom of Information Reading Room, U.S. Department of Energy, Forrestal Building, Room 1E–190, 1000 Independence Avenue, SW, Washington, D.C. 20585–0121, telephone (202) 586–6020, between the hours of 9:00 a.m. and 4:00 p.m., Monday through Friday, except Federal holidays.

FOR FURTHER INFORMATION CONTACT:

Michael G. Raymond, U.S. Department of Energy, Energy Efficiency and Renewable Energy, Mail Station EE–43, Forrestal Building, 1000 Independence Avenue, SW, Washington, D.C., 20585–0121, (202) 586–9611

Eugene Margolis, Esq., U.S. Department of Energy, Office of General Counsel, Mail Station GC–72, Forrestal Building, 1000 Independence Avenue, SW, Washington, D.C. 20585–0103, (202) 586–9507

SUPPLEMENTARY INFORMATION:

I. Introduction

A. Authority

Part B of Title III of the Energy Policy and Conservation Act of 1975, Public Law 94–163, as amended by the National Energy Conservation Policy Act, Public Law 95–619, the National Appliance Energy Conservation Act of 1987, Public Law 100–12, the National Appliance Energy Conservation Amendments of 1988, Public Law 100–357, and the Energy Policy Act of 1992, Public Law 102–486, created the Energy Conservation Program for Consumer Products other than Automobiles (Program).[1] The products currently subject to this Program (often referred to hereafter as ''covered products'') include electric refrigerators and electric refrigerator-freezers.

Under the Act, the Program consists essentially of three parts: testing, labeling, and the Federal energy conservation standards. This proposed rule concerns the testing aspect of this program. The Department, with assistance from the National Institute of Standards and Technology, may amend or establish new test procedures, as appropriate, for any covered product. EPCA, § 323. The purpose of the test procedures is to produce test results that measure energy efficiency, energy use, water use (in the case of showerheads, faucets, water closets and urinals), or estimated annual operating cost of a covered product during a representative average use cycle or period of use. The test procedures shall not be unduly burdensome to conduct. EPCA, § 323(b)(3). One hundred and eighty days after a test procedure for a product is adopted, no manufacturer may make representations with respect to energy use, efficiency or water use of such product, or the cost of energy consumed by such product, except as reflected in tests conducted according to the DOE procedure. EPCA, § 323(c)(2).

Test procedures promulgated by DOE appear at 10 CFR Part 430, Subpart B. The ''Uniform Test Method for Measuring the Energy Consumption of Electric Refrigerators and Electric Refrigerator-Freezers'' appears at Appendix A1 to Subpart B.

Section 323(e) of the Act requires DOE to determine to what extent, if any, a proposed test procedure would alter the measured energy efficiency, measured energy use or measured water use of any covered product as determined under the existing test procedure. If DOE determines that an amended test procedure would alter the measured efficiency or measured use of a covered product, DOE is required to amend the applicable energy conservation standard accordingly. In determining the amended energy conservation standard, DOE is required to measure the energy efficiency or energy use of a representative sample of covered products that minimally comply with the existing standard. The average energy use of this representative sample, determined under the amended test procedure, constitutes the amended standard. EPCA, § 323(e)(2).

B. Background

Today's notice proposes to add test procedure amendments that are specific to a new product design—externally vented refrigerators and externally vented refrigerator-freezers. These test procedure amendments will apply only to this product design and will not apply to existing product designs of refrigerators and refrigerator-freezers without this feature. Existing test procedures for non-externally vented refrigerators and refrigerator-freezers will remain unchanged. The energy conservation standards for refrigerators and refrigerator-freezers will be unaffected by the adoption or use of the proposed new test procedures.

The Department does not believe that any of the proposed changes to the test procedures would alter the measurement of energy consumption of electric refrigerators and refrigerator-freezers currently on the market. Accordingly, adoption of the proposed amended test procedures would not require any change in energy conservation standards for refrigerators and refrigerator-freezers currently in place. In addition, the Department believes that the proposed test procedure amendments would have no effect on the pending rulemaking considering revised minimum energy conservation standards for electric

[1] Part B of Title III of Energy Policy and Conservation Act, as amended, is referred to in this proposed rule as ''EPCA'' or the ''Act.'' Part B of Title III is codified at 42 U.S.C. 6291–6309.

refrigerators, refrigerator-freezers and freezers. (Docket No. EE–RM–93–801).

On March 14, 1995, Edward Schulak Equities, Inc. (''ESE'') submitted a letter to the Department regarding the inapplicability of existing test procedures in Appendix A1 to externally vented refrigerators. ESE submitted a description of an externally vented refrigerator from a recently granted patent. ESE claimed that allowing cooler outside air to be passed over the condenser/compressor of a refrigerator would reduce energy consumption of the refrigerator. ESE explained that the existing test procedures address only a closed system without the possibility of transfer of exterior air cooler than the ambient room temperature. Based on the information submitted, the Department agrees that the existing test procedures do not permit the measurement of energy consumption of an externally vented refrigerator.

While ESE's letter was submitted as a petition for waiver, the Department concluded that its waiver process was not appropriate because waivers apply to ''basic models,'' and no models are currently being manufactured incorporating this invention, nor is the invention being produced for retrofitting. Therefore, the Department published ESE's letter and issued a Notice of Inquiry inviting public comment on several issues relating to the energy consumption, manufacturability, and retrofitting of externally vented refrigerators. 60 FR 37603 (July 21, 1995). The Department also invited comments on methods of testing externally vented refrigerators and refrigerator-freezers to determine energy savings. Notice of Inquiry at 60 FR 37604. No public comments were received in response to this Notice of Inquiry.

On November 13, 1995, acting upon the Department's suggestion, ESE submitted a draft of proposed amendments to the test procedures for refrigerators and refrigerator-freezers. The Department referred this submittal to the National Institute of Standards and Technology (NIST). NIST, the Department and ESE representatives extensively discussed the requirements for test procedures for externally vented refrigerators and refrigerator-freezers. NIST conducted an analysis of test procedures for externally vented refrigerators and refrigerator-freezers. The notice published today by the Department reflects these extensive discussions and subsequent NIST recommendations for test procedure amendments.

Today's notice proposes revising the test procedures for electric refrigerators and electric refrigerator-freezers appearing in 10 CFR Part 430, Subpart B, Appendix A1 by: (1) Adding a definition of externally vented refrigerators and refrigerator-freezers to which the revisions are applicable, (2) prescribing test conditions for externally vented refrigerators and refrigerator-freezers, (3) specifying energy consumption measurement tests for externally vented refrigerators and refrigerator-freezers, and (4) including calculation methods for deriving results from test measurements.

II. Discussion

The current test procedures for refrigerators and refrigerator-freezers, found at 10 CFR Part 430, Appendix A1 of Subpart B, does not address testing of externally vented refrigerators and refrigerator-freezers. The existing test procedures apply to a refrigerator system to which cool outside air cannot be conducted for purposes of heat transfer. Externally vented refrigerators would be designed to permit outside air to be introduced across the refrigerator's condenser and compressor and, in some cases, throughout the walls of the refrigerator. The introduction of outside air at temperatures lower than the ambient room air temperature permits more efficient heat transfer, potentially resulting in energy savings.

The Department therefore proposes to revise the test procedures to include provisions tailored to measuring the energy consumption of externally vented refrigerators and refrigerator-freezers. These provisions will add to, rather than replace, the existing test procedures, which remain fully applicable to both externally vented and non-vented refrigerators and refrigerator-freezers. The Department emphasizes that the proposed amendments to the test procedures do not affect in any way the test procedures applicable to existing refrigerator designs. The amendments provide a method for accurately measuring the energy consumption of an enclosed, externally vented refrigerator or refrigerator-freezer unit and take account of design features (e.g., enclosed condenser, outside air conduits, dampers) peculiar to an externally vented refrigerator or refrigerator-freezer that circulates outside air around its condenser. The amendments do not apply to refrigerators or refrigerator-freezers that use outside air through the refrigerator walls. With these amendments, the test procedures will provide a basis for making comparable measurements of energy consumption for externally vented and unvented refrigerators and refrigerator-freezers.

The Department also emphasizes that recognition of a design option of externally vented refrigerators and refrigerator-freezers does not affect in any way the Department's consideration of design options in connection with its consideration of proposed revisions to energy consumption standards for refrigerators and refrigerator-freezers. This design option was not included in the standards rulemaking record and therefore cannot be considered in the current standards rulemaking.

The Department invites comments on any aspect of the proposed test procedure amendments for externally vented refrigerators and refrigerator-freezers.

The Department today proposes to amend the test procedures applicable to electric refrigerators and electric refrigerator-freezers (10 CFR Part 430, Subpart B, Appendix A1), as follows:

1. *Definitions and applicability of amended test procedures.* The Department proposes to define ''externally vented refrigerator or refrigerator-freezer'' as a refrigerator or refrigerator-freezer with an enclosed condenser or an enclosed condenser/compressor compartment, and a set of air ducts for transferring exterior air from outside the building envelope into, through, and out of the refrigerator or refrigerator-freezer cabinet (section 1.12). Energy consumption savings from an externally vented refrigerator or refrigerator-freezer should be achievable for outside air temperatures between 60 °F and 80 °F. Above 80 °F, outside air may be warmer than ambient room air, making heat transfer in the wrong direction for energy savings. Below 60 °F, outside air may be too cool for optimal operation of the unit. The proposed amendments to the test procedures are generally predicated upon a unit's design that permits the exclusion and/or mixing of outside air that is either above 80 °F or below 60 °F. Accordingly, the amendments to the test procedures will apply only under conditions where the externally vented refrigerator or refrigerator-freezer design is capable of mixing the exterior air drawn in from outside the building envelope with the ambient room air. The modification includes thermostatically controlled dampers or controls that: 1) enable the proper mixing of outside and ambient room air when the outside air temperature is lower than 60 °F, and 2) exclude outside air warmer than 80 °F, or warmer than room air temperature (section 1.12). Externally vented units could have

temperature controls that exclude outside air either at a pre-set temperature no lower than 80 °F or when the outside air temperature exceeds the ambient room air temperature (section 1.12). The test procedures require that prior to conducting energy consumption tests, the operability of thermostatic controls be verified (section 5.4.1). All tests must generally be conducted with the thermostatic controls operable. A special rule is provided for testing energy consumption when mixing controls do not operate properly (section 5.4.2.4). The test procedures will take account of the energy consumption of any exterior air fan that draws air to the refrigerator cabinet.

2. *Exterior air source.* The Department recognizes that actual testing should take place under conditions of variable exterior air temperatures and, therefore, proposes to require that prescribed test conditions include the provision of an external air source that provides air at adjustable temperature and pressure capabilities (section 2.6). The test procedures prescribe the location of temperature sensors for measuring the air temperature at the inlet to the condenser/compressor compartment (section 2.6.2). Air temperature will also be measured at the exterior air source. Temperature measurements are to be made at prescribed intervals.

3. *Air ducts.* Externally vented refrigerators and refrigerator/freezers depend upon air ducts to transfer exterior air to the refrigerator cabinet. Rather than specifying the length, diameter, shape and material of the duct, the Department proposes to specify air pressure requirements as a uniform test condition (section 2.6.3). Specifically, the proposed test procedures require exterior air pressure at the inlet to the refrigerator unit to be maintained at a negative pressure of 0.20″ ± 0.05″ water column (62 Pa ± 12.5 Pa). The test procedures also specify location distances for the pressure sensors, relative to the exterior air source (i.e., the inlet to the building envelope) and to the condenser inlet.

4. *Applicability of general test method conditions.* The proposed amendments to the test procedures are not intended to supplant existing test methods applicable to all other refrigerators and refrigerator-freezers. Accordingly, the proposed amendments provide that, except as expressly modified, the test conditions and specifications included in the existing test procedures shall also apply to externally vented refrigerators and refrigerator-freezers (section 5.4).

5. *Energy consumption correction factor for test measurements.* The Department proposes a series of formulas for determining energy consumption from test measurements. First, the Department recognizes that energy consumption of any refrigerator will be different with and without door openings. Under the existing test procedure, refrigerators are tested at 90 °F without door openings to simulate the energy consumption they would have at normal room temperature with door openings. Normal room temperature for the refrigerator test procedure is considered to be 80 °F, the typical temperature of the ambient air surrounding the refrigerator's condenser. An externally vented refrigerator will show an artificially low energy consumption compared to an unvented refrigerator when tested at 90 °F room air temperature, because 90 °F is warmer than normal room temperature. The Department proposes to require calculation of a correction factor for each basic model of externally vented refrigerator. The correction factor is the ratio of the energy consumption of an externally vented refrigerator (with external venting disabled) at 90 °F inlet air temperature to the energy consumption of the unit at 80 °F inlet air temperature (sections 5.4.2.1 and 6.3.1).

6. *Energy consumption test measurements and calculations.* Based on analysis by NIST and its derivation of an algebraic equation for determining energy consumption over a range of outside air temperatures, the Department has determined that test measurements of energy consumption need be taken at only two outside air temperatures, 90 °F and 60 °F (sections 5.4.2.2 and 5.4.2.3). If the outside air temperature is not in this range, mixing controls and dampers will keep the condenser inlet temperature within the range. Accordingly, the Department proposes an energy profile equation that will allow for the interpolation of energy consumption at outside air temperatures within this range (section 6.3.4). The parameters of the energy profile equation are determined for each basic model of externally vented refrigerator that is tested, based on the measured energy consumption during testing at 90 °F and 60 °F.

Once the parameters of the energy profile equation are determined, the test procedures provide a basis for calculating energy consumption at various temperatures. Because temperatures vary across the country, throughout a day, and throughout the year, the proposed test procedures specify an energy consumption formula that determines a unit's total energy consumption based on weighted averaging of the unit's energy consumption at different exterior air temperatures. The test procedures provide weighting factors for a national average energy consumption (section 6.3.6) and weighting factors for four different regions of the country, which are identified on a map. This procedure was based on the test procedure for heat pumps, for which energy savings are also a function of climate. The regional map is the same as that used in the heat pump test procedure, except Regions I and II from the heat pump test procedure are combined and called Region I. Externally vented refrigerators need only be tested at 90 °F and 60 °F, and from such measurements, application of the correction factor, and application of the energy profile equation, the unit's average per cycle energy consumption can be determined for the nation as a whole and for each of the four regions of the country. The Department recognizes the Federal Trade Commission (FTC) has authority to prescribe labeling requirements for all types of refrigerators and other covered products and may require fact sheets containing regional performance information. The proposed energy consumption measurement formulas would satisfy the FTC's requirements.

7. *Reporting requirements.* The Department is proposing to add a reporting requirement for externally vented refrigerators and refrigerator-freezers. The energy savings due to externally venting a refrigerator or refrigerator-freezer is a function of the outdoor air temperature, therefore, externally vented refrigerators and refrigerator-freezer's energy use will depend on climate. The Department proposes to require that a manufacturer's certification report include the national average annual energy use for externally vented refrigerators and refrigerator-freezers. Separate reporting of regional per cycle energy consumption would not be required.

III. Review Under the National Environmental Policy Act of 1969

In this rule, the Department proposes amendments to the test procedures for refrigerators and refrigerator-freezers to include externally vented refrigerators and refrigerator-freezers. The Department has determined that this rule is covered under the Categorical Exclusion found at paragraph A.6 of appendix A to Subpart D, 10 CFR Part 1021, which applies to the establishment of procedural rulemakings. This Proposed Rule is also a procedural rulemaking and its implementation will not affect the

quality or distribution of energy usage and therefore will not result in any environmental impacts. Accordingly, neither an environmental assessment nor an environmental impact statement is required.

IV. Regulatory Review

Today's regulatory proposal has been determined not to be a ''significant regulatory action'' under Executive Order 12866, ''Regulatory Planning and Review,'' (58 FR 51735, October 4, 1993). Accordingly, today's action was not subject to review under the Executive Order by the Office of Information and Regulatory Affairs.

V. Regulatory Flexibility Review

The proposed rule has been reviewed under the Regulatory Flexibility Act, Pub. L. 96–354 (42 U.S.C. 601–612) which requires preparation of a regulatory flexibility analysis for any regulation that will have a significant economic impact on a substantial number of small entities, i.e., small businesses and small government jurisdictions. The proposed rule would not have significant economic impact on manufacturers of externally vented refrigerators and refrigerator-freezers. The rule, if promulgated, would modify the testing methods that currently apply. DOE accordingly certifies that the proposed rule would not, if promulgated, have a significant economic impact on a substantial number of small entities and that preparation of a regulatory flexibility analysis is not warranted.

VI. ''Takings'' Assessment Review

It has been determined pursuant to Executive Order 12630 (52 FR 8859, March 18, 1988) that this proposed regulation, if adopted, would not result in any takings which might require compensation under the Fifth Amendment to the United States Constitution.

VII. Federalism Review

Executive Order 12612 (52 FR 41685, October 30, 1987) requires that regulations or rules be reviewed for any substantial direct effects on States, on the relationship between the Federal Government and the States, or on the distribution of power and responsibilities among various levels of Government. If there are sufficient substantial direct effects, the Executive Order 12612 requires the preparation of a Federalism assessment to be used in decisions by senior policy makers in promulgating or implementing the regulation.

The proposed rule published today would not alter the distribution of authority and responsibility to regulate in this area. The proposed rule would only revise a currently applicable DOE test procedure to accommodate a technological development in the manufacture of refrigerators and refrigerator-freezers. Accordingly, DOE has determined that preparation of a federalism assessment is unnecessary.

VIII. Paperwork Reduction Act Review

This proposed rule contains no new collections of information under the Paperwork Reduction Act, 44 U.S.C. 3501 *et seq.*

IX. Review Under Unfunded Mandates Reform Act of 1995

Section 202 of the Unfunded Mandates Reform Act of 1995 (''Unfunded Mandates Act'') requires that the Department prepare a budgetary impact statement before promulgating a rule that includes a Federal mandate that may result in expenditure by state, local, and tribal governments, in the aggregate, or by the private sector, of $100 million or more in any one year. The budgetary impact statement must include: (i) Identification of the Federal law under which the rule is promulgated; (ii) a qualitative and quantitative assessment of anticipated costs and benefits of the Federal mandate and an analysis of the extent to which such costs to state, local, and tribal governments may be paid with Federal financial assistance; (iii) if feasible, estimates of the future compliance costs and of any disproportionate budgetary effects the mandate has on particular regions, communities, non-Federal units of government, or sectors of the economy; (iv) if feasible, estimates of the effect on the national economy; and (v) a description of the Department's prior consultation with elected representatives of state, local, and tribal governments and a summary and evaluation of the comments and concerns presented.

The Department has determined that the action proposed today does not include a Federal mandate that may result in estimated costs of $100 million or more to state, local or to tribal governments in the aggregate or to the private sector. Therefore, the requirements of Sections 203 and 204 of the Unfunded Mandates Act do not apply to this action.

X. Review Under Executive Order 12988, ''Civil Justice Reform''

With respect to the review of existing regulations and the promulgation of new regulations, Section 3(a) of Executive Order 12988, ''Civil Justice Reform,'' 61 FR 4729 (February 7, 1996), imposes on executive agencies the general duty to adhere to the following requirements: (1) Eliminate drafting errors and ambiguity; (2) write regulations to minimize litigation; and (3) provide a clear legal standard for affected conduct rather than a general standard and promote simplification and burden reduction. With regard to the review required by Section 3(a), Section 3(b) of the Executive Order specifically requires that Executive agencies make every reasonable effort to ensure that the regulation: (1) Clearly specifies the preemptive effect, if any; (2) clearly specifies any effect on existing Federal law or regulation; (3) provide a clear legal standard for affected conduct while promoting simplification and burden reduction; (4) specifies the retroactive effect, if any; (5) adequately defines key terms; and (6) addresses other important issues affecting clarity and general draftsmanship under any guidelines issued by the Attorney General. Section 3(c) of the Executive Order requires Executive agencies to review regulations in light of applicable standards Section 3(a) and Section 3(b) to determine whether they are met or it is unreasonable to meet one or more of them. DOE reviewed today's proposed rulemaking under the standards of Section 3 of the Executive Order and determined that, to the extent permitted by law, they meet the requirements of those standards.

XI. Public Comment Procedures

A. Written Comment Procedures

Interested persons are invited to participate in the rulemaking by submitting data, comments, or information with respect to the proposed test procedures set forth in this notice to the address indicated at the beginning of the notice.

Comments should be identified both on the envelope and on the documents as ''Test Procedures for Refrigerators and Refrigerator-Freezers,'' Docket No. EE–RM–97–118. Ten (10) copies are requested to be submitted. In addition, the Department requests that an electronic copy (3½″ diskette) of the comments on WordPerfect™ 6.1 be provided. All submittals received by the date specified at the beginning of this notice will be considered by the Department of Energy before final action is taken on the proposed amendments.

Pursuant to the provisions of 10 CFR 1004.11, any person submitting information that he or she believes to be

confidential and exempt by law from public disclosure should submit one complete copy of the document and ten (10) copies, if possible, from which the information believed to be confidential has been deleted. The Department of Energy will make its own determination with regard to the confidential status of the information and treat it according to its determination.

Factors of interest to DOE when evaluating requests to treat as confidential information that has been submitted include: (1) A description of the items; (2) an indication as to whether and why such items are customarily treated as confidential within the industry; (3) whether the information is generally known by or available from other sources; (4) whether the information has previously been made available to others without obligation concerning its confidentiality; (5) an explanation of the competitive injury to the submitting person that would result from public disclosure; (6) an indication as to when such information might lose its confidential character due to the passage of time; and (7) why disclosure of the information would be contrary to the public interest.

B. Issues for Public Comment

The Department of Energy is interested in receiving comments and data concerning the suitability and workability of these test procedures. Also, the Department welcomes comment on improvements or alternatives to these approaches. In particular, DOE is interested in gathering comments on the following:

- The appropriateness of providing test procedures for externally vented refrigerators and refrigerator-freezers.
- The definition of externally vented refrigerators and refrigerator-freezers and the applicability of the proposed revisions of the test procedures.
- The interaction of the externally vented refrigerator and refrigerator/freezer and its associated air conduits and building envelope penetration with the building heating and cooling loads.
- The effects on energy conservation if externally vented refrigerators and refrigerator-freezers are installed without the outside air connection, and methods for adjusting the test results to account for the likely failure of some consumers to make use of this feature.
- The appropriate test conditions for externally vented refrigerators and refrigerator-freezers, including the selection of outside air temperatures at which testing should occur.
- The appropriateness of the correction factor to account for the externally vented refrigerator and refrigerator-freezer's testing advantage resulting from the 90°F test temperature.
- The appropriateness of the energy profile equations and the derivation of formulas for computing energy consumption from test results.
- The appropriateness and means of measuring national and regional average per cycle energy consumption.

List of Subjects in 10 CFR Part 430

Administrative practice and procedure, Energy conservation, Household appliances.

Issued in Washington, DC, March 24, 1997.

Christine A. Ervin,

Assistant Secretary, Energy Efficiency and Renewable Energy.

For the reasons set forth in the preamble, Part 430 of Chapter II of Title 10, Code of Federal Regulations is proposed to be amended as follows:

PART 430—ENERGY CONSERVATION PROGRAM FOR CONSUMER PRODUCTS

1. The authority citation for Part 430 continues to read as follows:

Authority: 42 U.S.C. 6291–6309.

2. Section 430.23 (a) is amended in the following respects:

Subpart B—Test Procedures

§ 430.23 Test procedures for measures of energy consumption.

(a) Refrigerators and refrigerator-freezers. (1) The estimated annual operating cost for electric refrigerators and electric refrigerator-freezers without an anti-sweat heater switch shall be the product of the following three factors:

(i) The representative average-use cycle of 365 cycles per year,

(ii) The average per-cycle energy consumption for the standard cycle in kilowatt-hours per cycle, determined according to 6.2 or 6.3.6 of appendix A1 of this subpart for the non-externally vented or externally vented units, respectively, and

(iii) The representative average unit cost of electricity in dollars per kilowatt-hour as provided by the Secretary, the resulting product then being rounded off to the nearest dollar per year.

(2) The estimated annual operating cost for electric refrigerators and electric refrigerator-freezers with an anti-sweat heater switch shall be the product of the following three factors:

(i) The representative average-use cycle of 365 cycles per year,

(ii) Half the sum of the average per-cycle energy consumption for the standard cycle and the average per-cycle energy consumption for a test cycle type with the anti-sweat heater switch in the position set at the factory just prior to shipping, each in kilowatt-hours per cycle, determined according to 6.2 or 6.3.6 of appendix A1 of this subpart for the non-externally vented or externally vented units, respectively, and

(iii) The representative average unit cost of electricity in dollars per kilowatt-hour as provided by the Secretary, the resulting product then being rounded off to the nearest dollar per year.

(3) The estimated annual operating cost for any other specified cycle type for electric refrigerators and electric refrigerator-freezers shall be the product of the following three factors:

(i) The representative average-use cycle of 365 cycles per year,

(ii) The average per-cycle energy consumption for the specified cycle type, in kilowatt-hours per cycle, determined according to 6.2 or 6.3.6 of appendix A1 of this subpart for the non-externally vented or externally vented units, respectively, and

(iii) The representative average unit cost of electricity in dollars per kilowatt-hour as provided by the Secretary, the resulting product then being rounded off to the nearest dollar per year.

(4) The energy factor for electric refrigerators and electric refrigerator-freezers, expressed in cubic feet per kilowatt-hour per cycle, shall be—

(i) For electric refrigerators and electric refrigerator-freezers not having an anti-sweat heater switch, the quotient of

(A) The adjusted total volume in cubic feet, determined according to 6.1 of Appendix A1 of this subpart, divided by

(B) The average per-cycle energy consumption for the standard cycle in kilowatt-hours per cycle, determined according to 6.2 or 6.3.6 of appendix A1 of this subpart for the non-externally vented or externally vented units, respectively, the resulting quotient then being rounded off to the second decimal place, and

(ii) For electric refrigerators and electric refrigerator-freezers having an anti-sweat heater switch, the quotient of

(A) The adjusted total volume in cubic feet, determined according to 6.1 of Appendix A1 of this subpart, divided by

(B) Half the sum of the average per-cycle energy consumption for the standard cycle and the average per-cycle energy consumption for a test cycle type with the anti-sweat heater switch in the position set at the factory just prior to

shipping, each in kilowatt-hours per cycle, determined according to 6.2 or 6.3.6 of appendix A1 of this subpart for the non-externally vented or externally vented units, respectively, the resulting quotient then being rounded off to the second decimal place.

(5) The annual energy use of electric refrigerators and electric refrigerator-freezers equals the representative average use cycle of 365 cycles per year times the average per-cycle energy consumption for the standard cycle in kilowatt-hours per cycle, determined according to 6.2 or 6.3.6 of appendix A1 of this subpart for the non-externally vented or externally vented units, respectively.

(6) Other useful measures of energy consumption for electric refrigerators and electric refrigerator-freezers shall be those measures of energy consumption for electric refrigerators and electric refrigerator-freezers which the Secretary determines are likely to assist consumers in making purchasing decisions which are derived from the application of appendix A1 of this subpart.

(7) The estimated regional annual operating cost for externally vented electric refrigerators and externally vented electric refrigerator-freezers without an anti-sweat heater switch shall be the product of the following three factors:

(i) The representative average cycle of 365 cycles per year,

(ii) The regional average per-cycle energy consumption for the standard cycle in kilowatt-hours per cycle, determined according to 6.3.7 of appendix A1 of this subpart and

(iii) The representative average unit cost of electricity in dollars per kilowatt-hour as provided by the Secretary, the resulting product then being rounded off to the nearest dollar per year.

(8) The estimated regional annual operating cost for externally vented electric refrigerators and externally vented electric refrigerator-freezers with an anti-sweat heater switch shall be the product of the following three factors:

(i) The representative average cycle of 365 cycles per year,

(ii) Half the sum of the average per-cycle energy consumption for the standard cycle and the regional average per-cycle energy consumption for a test cycle type with the anti-sweat heater switch in the position set at the factory just prior to shipping, each in kilowatt-hours per cycle, determined according to 6.3.7 of appendix A1 of this subpart, and

(iii) The representative average unit cost of electricity in dollars per kilowatt-hour as provided by the Secretary, the resulting product then being rounded off to the nearest dollar per year.

(9) The estimated regional annual operating cost for any other specified cycle type for externally vented electric refrigerators and externally vented electric refrigerator-freezers shall be the product of the following three factors:

(i) The representative average cycle of 365 cycles per year,

(ii) The regional average per-cycle energy consumption for the specified cycle type, in kilowatt-hours per cycle, determined according to 6.3.7 of appendix A1 of this subpart, and

(iii) The representative average unit cost of electricity in dollars per kilowatt-hour as provided by the Secretary, the resulting product then being rounded off to the nearest dollar per year.

* * * * *

3. Section 1 of Appendix A1 is amended by adding the following definition:

Appendix A1 to Subpart B of Part 430—Uniform Test Method for Measuring the Energy Consumption of Electric Refrigerators and Electric Refrigerator-Freezers

1. Definitions

* * * * *

1.12 *Externally vented refrigerator or refrigerator-freezer* means an electric refrigerator or electric refrigerator-freezer that: has an enclosed condenser or an enclosed condenser/compressor compartment and a set of air ducts for transferring the exterior air from outside the building envelope into, through and out of the refrigerator or refrigerator-freezer cabinet; is capable of mixing exterior air with the room air before discharging into, through, and out of the condenser or condenser/compressor compartment; includes thermostatically controlled dampers or controls that enable the proper mixing of the exterior and room air at low outdoor temperatures, and the exclusion of exterior air when the outdoor air temperature is above 80°F or the room air temperature. It may have a thermostatically actuated exterior air fan.

4. Section 2 of Appendix A1 is amended by adding the following new sections:

2. Test Conditions

* * * * *

2.6 *Exterior air for externally vented refrigerator or refrigerator-freezer.* An exterior air source shall be provided with adjustable temperature and pressure capabilities. The exterior air temperature shall be adjustable from 35±1 °F (1.7±0.6 °C) to 90±1 °F (32.2±0.6 °C).

2.6.1 *Air duct.* The exterior air shall pass from the exterior air source to the test unit through an insulated air duct.

2.6.2 *Air temperature measurement.* The air temperature entering the condenser or condenser/compressor compartment shall be maintained to ±3 °F (1.7 °C) during the stabilization and test periods and shall be measured at the inlet point of the condenser or condenser/compressor compartment (''condenser inlet''). Temperature measurements shall be taken from at least three temperature sensors or one sensor per 4 square inches of the air duct cross sectional area, whichever is greater, and shall be averaged. For a unit that has a condenser air fan, a minimum of three temperature sensors at the condenser fan discharge shall be required. Temperature sensors shall be arranged to be at the centers of equally divided cross sectional areas. The exterior air temperature, at its source, shall be measured and maintained to ±1 °F (0.6 °C) during the test period. The temperature measuring devices shall have an error not greater than ±0.5 °F (±0.3 °C). Measurements of the air temperature during the test period shall be taken at regular intervals not to exceed four minutes.

2.6.3 *Exterior air static pressure.* The exterior air static pressure at the inlet point of the unit shall be adjusted to maintain a negative pressure of 0.20″ ±0.05″ water column (62 Pa±12.5 Pa) for all air flow rates supplied to the unit. The pressure sensor shall be located on a straight duct with a distance of at least 7.5 times the diameter of the duct upstream and a distance of at least 3 times the diameter of the duct downstream. There shall be four static pressure taps at 90° angles apart. The four pressures shall be averaged by interconnecting the four pressure taps. The air pressure measuring instrument shall have an error not greater than 0.01″ water column (2.5 Pa).

5. Section 5 of Appendix A1 is amended by adding the following new sections:

5. Test measurements

* * * * *

5.4 *Externally vented refrigerator or refrigerator-freezer units.* All test measurements for the externally vented refrigerator or refrigerator-freezer shall be made in accordance with the requirements of other sections of this Appendix, except as modified in this section 5.4 or other sections expressly applicable to externally vented refrigerators or refrigerator-freezers.

5.4.1 *Operability of thermostatic and mixing of air controls.* Prior to conducting energy consumption tests, the operability of thermostatic controls that permit the mixing of exterior and ambient air when exterior air temperatures are less than 60 °F must be verified. The operability of such controls shall be verified by operating the unit under ambient air temperature of 90 °F and exterior air temperature of 45 °F. If the inlet air entering the condenser or condenser/compressor compartment is maintained at 60 °F, plus or minus three degrees, energy consumption of the unit shall be measured under sections 5.4.2.2, and 5.4.2.3. If the inlet air entering the condenser or condenser/compressor compartment is not maintained at 60 °F, plus or minus three degrees, energy

consumption of the unit shall also be measured under section 5.4.2.4.

5.4.2 *Energy consumption tests.*

5.4.2.1 *Correction factor test.* To enable calculation of a correction factor, K, two full cycle tests shall be conducted to measure energy consumption of the unit with air mixing controls disabled and the condenser inlet air temperatures set at 90 °F (32.2 °C) and 80 °F (26.7 °C). Both tests shall be conducted with all compartment temperature controls set at the position midway between their warmest and coldest settings and the anti-sweat heater switch off. Record the energy consumptions ec_{90} and ec_{80}, in kWh/day.

5.4.2.2 *Energy consumption at 90 °F.* The unit shall be tested at 90 °F (32.2 °C) exterior air temperature to record the energy consumptions $(e_{90})_i$ in kWh/day. For a given setting of the anti-sweat heater, i corresponds to each of the two states of the compartment temperature control positions.

5.4.2.3 *Energy consumption at 60 °F.* The unit shall be tested at 60 °F (26.7 °C) exterior air temperature to record the energy consumptions $(e_{60})_i$ in kWh/day. For a given setting of the anti-sweat heater, i corresponds to each of the two states of the compartment temperature control positions.

5.4.2.4 *Energy consumption if mixing controls do not operate properly.* If the operability of temperature and mixing controls has not been verified as required under section 5.4.1, the unit shall be tested at 50 °F (10.0 °C) and 30 °F (−1.1 °C) exterior air temperatures to record the energy consumptions $(e_{50})_i$ and $(e_{30})_i$. For a given setting of the anti-sweat heater, i corresponds to each of the two states of the compartment temperature control positions.

6. Section 6 of Appendix A1 is amended by adding the following new sections:

6. Calculation of Derived Results from Test Measurements

* * * * *

6.3 *Externally vented refrigerator or refrigerator-freezers.* Per-cycle energy consumption measurements for the externally vented refrigerator or refrigerator-freezer shall be calculated in accordance with the requirements of this Appendix, as modified in sections 6.3.1—6.3.7.

6.3.1 *Correction factor.* A correction factor, K, shall be calculated as:

$K = ec_{90}/ec_{80}$

Where ec_{90} and ec_{80} = the energy consumption test results as determined under section 5.4.2.1.

6.3.2 *Combining test results of different settings of compartment temperature controls.* For a given setting of the anti-sweat heater, follow the calculation procedures of section 6.2 to combine the test results for energy consumption of the unit at different temperature control settings for each condenser inlet air temperature tested under sections 5.4.2.2, 5.4.2.3, and 5.4.2.4, where applicable, $(e_{90})_i$, $(e_{60})_i$, $(e_{50})_i$, and $(e_{30})_i$. The combined values are ε_{90}, ε_{60}, ε_{50}, and ε_{30}, where applicable, in kWh/day.

6.3.3 *Energy consumption corrections.* For a given setting of the anti-sweat heater, the energy consumptions ε_{90}, ε_{60}, ε_{50}, and ε_{30} calculated in section 6.3.2 shall be adjusted by multiplying the correction factor K to obtain the corrected energy consumptions per day, in kWh/day:

$E_{90} = K \times \varepsilon_{90}$,
$E_{60} = K \times \varepsilon_{60}$,
$E_{50} = K \times \varepsilon_{50}$, and
$E_{30} = K \times \varepsilon_{30}$

Where,

K is determined under section 6.3.1, and ε_{90}, ε_{60}, ε_{50}, and ε_{30} are determined under section 6.3.2.

6.3.4 *Energy profile equation.* For a given setting of the anti-sweat heater, the energy consumption E_x, in kWh/day, at a specific exterior air temperature between 80 °F (26.7 °C) and 60 °F (26.7 °C) shall be calculated by the following equation:

$E_x = a + bT_x$,

Where,

T_x = exterior air temperature in °F;
$a = 3E_{60} - 2E_{90}$, in kWh/day;
$b = (E_{90} - E_{60})/30$, in kWh/day per °F.

6.3.5 *Energy consumption at 80 °F (26.7 °C), 75 °F (23.9 °C) and 65 °F (18.3 °C).* For a given setting of the anti-sweat heater, calculate the energy consumptions at 80 °F (26.7 °C), 75 °F (23.9 °C) and 65 °F (18.3 °C) exterior air temperatures, E_{80}, E_{75} and E_{65}, respectively, in kWh/day, using the equation in 6.3.4.

6.3.6 *National average per cycle energy consumption.* For a given setting of the anti-sweat heater, calculate the national average energy consumption, E_N, in kWh/day, using one of the following equations:

$E_N = 0.523 \times E_{60} + 0.165 \times E_{65} + 0.181 \times E_{75} + 0.131 \times E_{80}$, for unit which is not tested under section 5.4.2.4,

$E_N = 0.257 \times E_{30} + 0.266 \times E_{50} + 0.165 \times E_{65} + 0.181 \times E_{75} + 0.131 \times E_{80}$, for unit tested under section 5.4.2.4,

Where,

E_{30}, E_{50}, and E_{60} are defined in 6.3.3,
E_{65}, E_{75}, and E_{80} are defined in 6.3.5, and the coefficients are weather associated weighting factors.

6.3.7 *Regional average per cycle energy consumption.* If regional average per cycle energy consumption is required to be calculated, for a given setting of the anti-sweat heater, calculate the regional average per cycle energy consumption, E_R, in kWh/day, for the regions in figure 1 using one of the following equations and the coefficients in the table A:

$E_R = a_1 \times E_{60} + c \times E_{65} + d \times E_{75} + e \times E_{80}$, for a unit that is not required to be tested under section 5.4.2.4,

$E_R = a \times E_{30} + b \times E_{50} + c \times E_{65} + d \times E_{75} + e \times E_{80}$, for a unit tested under section 5.4.2.4,

Where,

E_{30}, E_{50}, and E_{60} are defined in 6.3.3,
E_{65}, E_{75}, and E_{80} are defined in 6.3.5, and a_1, a, b, c, d, e are weather associated weighting factors for the Regions, as specified in Table A:

TABLE A.—COEFFICIENTS FOR CALCULATING REGIONAL AVERAGE PER CYCLE ENERGY CONSUMPTION

[Weighting Factors]

Regions	a_1	a	b	c	d	e
I	0.282	0.039	0.244	0.194	0.326	0.198
II	0.486	0.194	0.293	0.191	0.193	0.129
III	0.584	0.302	0.282	0.178	0.159	0.079
IV	0.664	0.420	0.244	0.161	0.121	0.055

BILLING CODE 6450–01–P

FIGURE 1

Weather Regions for the United States

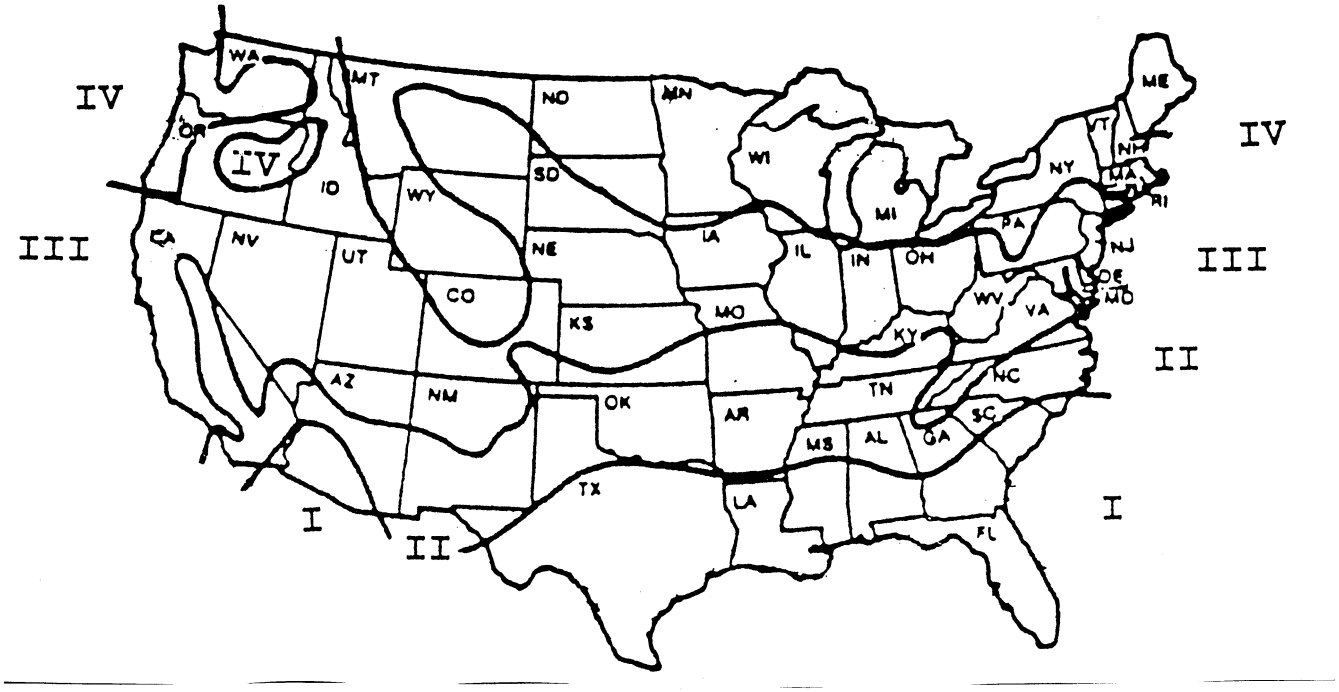

Alaska Region IV

Hawaii Region I

BILLING CODE 6450–01–C

§ 430.62 [Amended]

7. Section 430.62(a)(2) is amended by inserting after ''(for refrigerators, refrigerator-freezers, and freezers),'' in the first sentence, the following: ''the national average annual energy use and adjusted volume (for externally vented refrigerators and refrigerator-freezers),''.

[FR Doc. 97–8937 Filed 4–7–97; 8:45 am]

BILLING CODE 6450–01–P

ENVIRONMENTAL PROTECTION AGENCY

40 CFR Part 52

[IL 150; FRL–5804–3]

Approval and Promulgation of Implementation Plan; Illinois

AGENCY: U.S. Environmental Protection Agency (USEPA).

ACTION: Proposed rule.

SUMMARY: The USEPA is proposing to approve the State Implementation Plan (SIP) revision request submitted by the Illinois Environmental Protection Agency (IEPA) on August 15, 1996. In the August 15 request, IEPA requested that the Marathon Oil Company in Robinson, Illinois be granted a carbon monoxide variance with specified conditions beginning January 19, 1996, and ending August 4, 1997. In the Final Rules section of this **Federal Register**, USEPA is approving the State's SIP revision as a direct final rule without prior proposal because the agency views this as a noncontroversial SIP revision and anticipates no adverse comments. A detailed rationale for the approval is set forth in the direct final rule. If no adverse comments are received in response to this proposed rule, no further activity is contemplated in relation to this rule. If USEPA receives adverse comments, the direct final rule will be withdrawn and all public comments received will be addressed in a subsequent final rule based on this proposed rule. USEPA will not institute

a second comment period on this action. Any parties interested in commenting on this action should do so at this time.

DATES: Comments must be received in writing by May 8, 1997.

ADDRESSES: Copies of the revision request are available for inspection at the following address: U.S. Environmental Protection Agency, Region 5, Air and Radiation Division, 77 West Jackson Boulevard, Chicago, Illinois 60604. (It is recommended that you telephone Ryan Bahr at (312) 353–4366 before visiting the Region 5 Office.)

Written comments should be sent to: J. Elmer Bortzer, Chief, Regulation Development Section, Air Programs Branch (AR–18J), U.S. Environmental Protection Agency, 77 West Jackson Boulevard, Chicago, Illinois 60604.

FOR FURTHER INFORMATION CONTACT: Ryan Bahr, at (312) 353–4366.

SUPPLEMENTARY INFORMATION: See the information provided in the Direct Final action of the same title which is located in the Rules and Regulations Section of this **Federal Register**.

Authority: 42 U.S.C. 7401–7671q.

Dated: March 19, 1997.

David A. Ullrich,

Acting Regional Administrator.

[FR Doc. 97–8897 Filed 4–7–97; 8:45 am]

BILLING CODE 6560–50–P

ENVIRONMENTAL PROTECTION AGENCY

40 CFR Part 261

[FRL–5807–5]

RIN 2050–AD88

Hazardous Waste Management System; Identification and Listing of Hazardous Waste; Petroleum Refining Process Wastes; and Land Disposal Restrictions for Newly Hazardous Wastes; Notice of Data Availability

AGENCY: Environmental Protection Agency.

ACTION: Notice of data availability and request for comment.

SUMMARY: The Environmental Protection Agency (EPA) is making available for public comment data and information relating to its Notice published in the **Federal Register** on November 20, 1995 (60 FR 57747). That Notice proposed to amend EPA regulations under the Resource Conservation and Recovery Act (RCRA) by designating as hazardous wastes certain petroleum refining waste streams and proposed not to list other petroleum waste streams. The Notice also proposed to broaden existing RCRA exemptions for recycling of oil-bearing residuals and proposed to apply universal treatment standards under the Land Disposal Restrictions program to the wastes proposed for listing.

Comments submitted by interested members of the public on the proposal have convinced EPA that the rulemaking record could be considerably improved by adding data and subjecting analysis of that data to public comments. Today's document, therefore, presents for public comment modeling analyses using different assumptions than used for the proposal, additional analyses of waste characteristics and disposal practices, and other evaluations of the potential impact of different modeling assumptions on the risk assessment results. This document also corrects a number of technical errors that were contained in the original proposal.

Pursuant to a consent decree in *Environmental Defense Fund (EDF)* v. *Browner* (Civ. No. 89–0598 D.D.C.), EPA has committed to issuing this Notice of data availability before making the final regulatory determination on whether the subject petroleum refining residuals should be listed as hazardous wastes. The consent decree requires the final rule to be issued by April 30, 1998. The Agency solicits comments on all aspects of the new information sources described in this Notice. All comments on the new information received by the close of the comment period will be considered by the Agency when making a final regulatory determination. Comments will be accepted and considered only on the new data mentioned in today's Notice and specifically identified under the docket number given in this document.

DATES: The Agency is reopening the comment period only for the limited purpose of obtaining information and views on the new data and analyses described in this Notice. Comments on the additional data will be accepted through June 9, 1997. Due to the short deadline for the final rule, EPA does not plan to grant any extensions of the comment period.

ADDRESSES: Commenters must send an original and two copies of their comments referencing docket number F–97–PRA–FFFFF to: RCRA Docket Information Center, Office of Solid Waste (5305G), U.S. Environmental Protection Agency Headquarters (EPA, HQ), 401 M Street, SW, Washington, D.C. 20460. Hand deliveries of comments should be made to the Arlington, VA, address listed below. Comments may also be submitted electronically by sending electronic mail through the Internet to: rcradocket@epamail.epa.gov. Comments in electronic format should also be identified by the docket number F–97–PRA–FFFFF. All electronic comments must be submitted as an ASCII file avoiding the use of special characters and any form of encryption. If comments are not submitted electronically, EPA is asking prospective commenters to voluntarily submit one additional copy of their comments on labeled personal computer diskettes in ASCII (TEXT) format or a word processing format that can be converted to ASCII (TEXT). It is essential to specify on the disk label the word processing software and version/edition as well as the commenter's name. This will allow EPA to convert the comments into one of the word processing formats utilized by the Agency. Please use mailing envelopes designed to physically protect the submitted diskettes. EPA emphasizes that submission of comments on diskettes is not mandatory, nor will it result in any advantage or disadvantage to any commenter.

Commenters should not submit electronically any confidential business information (CBI). An original and two copies of CBI must be submitted under separate cover to: RCRA CBI Document Control Officer, Office of Solid Waste (5305W), U.S. EPA, 401 M Street, SW, Washington, D.C. 20460.

Public comments and supporting materials are available for viewing in the RCRA Information Center (RIC), located at Crystal Gateway I, First Floor, 1235 Jefferson Davis Highway, Arlington, VA. The RIC is open from 9 a.m. to 4 p.m., Monday through Friday, excluding federal holidays. To review docket materials, it is recommended that the public make an appointment by calling (703) 603–9230. The public may copy a maximum of 100 pages from any regulatory docket at no charge. Additional copies cost $0.15/page. For information on accessing paper and/or electronic copies of the document, see the **SUPPLEMENTARY INFORMATION** section.

FOR FURTHER INFORMATION CONTACT: For general information, contact the RCRA Hotline at (800) 424–9346 or TDD (800) 553–7672 (hearing impaired). In the Washington, D.C., metropolitan area, call (703) 412–9810 or TDD (703) 412–3323. For information on specific aspects of the report, contact Maximo Diaz, Jr. or Robert Kayser, Office of Solid Waste (5304W), U.S. Environmental Protection Agency, 401 M Street, SW, Washington, D.C. 20460.

[E-mail addresses and telephone numbers: Diaz.max@epamail.epa.gov, (703) 308–0439; Kayser.robert@epamail.epa.gov, (703) 308–7304)].

SUPPLEMENTARY INFORMATION: Supporting documents in the docket for this Notice are also available in electronic format on the Internet. Follow these instructions to access these documents.

WWW: http://www.epa.gov/epaoswer/hazwaste/id
FTP: ftp.epa/gov
Login: anonymous
Password: your Internet address
Files are located in /pub/gopher/OSWRCRA.

The official record for this action will be kept in paper form. Accordingly, EPA will transfer all comments received electronically into paper form and place them in the official record, which will also include all comments submitted directly in writing. The official record is the paper record maintained at the address in **ADDRESSES** at the beginning of this document.

EPA responses to comments, whether the comments are written or electronic, will be in a notice in the **Federal Register** or in a response to comments document placed in the official record for this rulemaking. EPA will not immediately reply to commenters electronically other than to seek clarification of electronic comments that may be garbled in transmission or during conversion to paper form, as discussed above.

Background

RCRA section 3001(e), 42 U.S.C. 6921(e) requires EPA to make a determination whether to list certain specified wastes under RCRA section 3001(b)(1), 42 U.S.C. 6921(b)(1). These include petroleum refining wastes. The effect of such a listing would be to subject the wastes to regulation as hazardous waste under Subtitle C of RCRA. Pursuant to a consent decree between EPA and the Environmental Defense Fund (EDF), EPA has agreed to a schedule for promulgating a listing determination for fourteen petroleum residuals that the Agency had not previously considered listing.

EPA issued its proposed determination regarding the petroleum residuals on November 20, 1995 (60 FR 57747). EDF and EPA have negotiated a modification to the Consent Decree, in which the Agency has agreed to promulgate the final listing determination on or before April 30, 1998. EPA also agreed to issue today's Notice of data availability.

In the proposal, EPA considered whether the petroleum refining residuals met the criteria for listing a waste as hazardous as set out in 40 C.F.R. 261.11. EPA evaluated the potential toxicity of the constituents present in the wastes, the fate and mobility of the constituents, likely exposure routes, and the current waste management practices. EPA conducted a quantitative risk assessment where such an assessment was appropriate. The Agency proposed to list three of the wastes based on a determination that the wastes may pose a substantial present or potential hazard to human health or the environment when improperly managed. These wastes are: Clarified Slurry Oil Tank Sediment and/or In-line Filter/Separation Solids, Spent Catalyst from Hydrotreating, and Spent Catalyst from Hydrorefining. EPA proposed not to list the remaining 11 wastes.

EPA received approximately 2000 pages of comments from 52 parties, many raising a variety of complex technical issues. After reviewing the comments, EPA decided it was appropriate to undertake a variety of analyses not previously available to the public to assess the impact of using alternative assumptions in the Agency's risk assessment. Although these additional analyses are a logical outgrowth of the comments received and additional Notice and public comment is, therefore, not required, EPA has nevertheless decided that this Notice of data availability is a useful exercise and will help to strengthen the record for the Agency's decisions.

The remainder of this Notice is divided into two general parts. The first deals with new data and analyses prompted by public comments claiming EPA's analysis was either incorrect or incomplete; the second deals with portions of the record that public comments indicated were not clear and require better explanation.

Additional Information

As a result of reviewing the public comments, EPA reexamined the modeling approaches used for both groundwater and nongroundwater exposure risks in making the listing determinations in the November 1995 Notice, completed a variety of additional modeling analyses, examined a number of alternative modeling assumptions, and gathered and evaluated additional relevant data. EPA also obtained additional data and performed additional analyses in response to comments for some of the other decisions described in the November 1995 Notice. A complete list of all new materials placed in the docket is available from the RCRA Docket at the address and telephone number listed above. A summary of the new data and analyses follows.

- *Supplemental Background Document; Groundwater Pathway Risk Analysis; Petroleum Refining Process Waste Listing Determination*—EPA has prepared a new document, with this title, that presents alternative approaches to the groundwater modeling used to evaluate risks from landfills. The alternative approaches are: A revised ''high-end'' analysis; a probabilistic Monte Carlo analysis; an analysis of potential risks presented by codisposal of petroleum wastes in the same landfill; an analysis of potential risks arising from a contingent management listing; consideration of noningestion risks related to groundwater use; and the potential for the RCRA Toxicity Characteristic (TC), promulgated under 40 CFR 262.24, to reduce risks for some wastes.
- *Supplemental Background Document; Nongroundwater Pathway Risk Assessment; Petroleum Refining Process Waste Listing Determination*—EPA prepared a new document, with this title, that presents modeling analyses for pathways other than groundwater for land treatment disposal. These analyses incorporate several modifications to the assumptions used for the proposal including: Limiting unit characteristics of the onsite units used in risk modeling to units that are not permitted hazardous waste units; removing from modeling consideration the volumes of hazardous wastes that could not be sent to a nonhazardous land treatment unit; changes to the models used to estimate release and transport of contaminated soil to offsite receptors; and incorporating the soil biodegradation of constituents after they travel offsite. The document also presents results from an analysis of potential risks due to codisposal of multiple petroleum wastes in the same land treatment unit. In addition, this document contains a detailed description of the model selected to estimate risks from noningestion exposures (inhalation and dermal absorption) arising from residential use of groundwater (see also the Background Document for groundwater pathway risk analysis for results of this modeling).
- *Supplemental Background Document; Listing Support Analyses; Petroleum Refining Process Waste Listing Determination*—EPA prepared a document, with this title, that presents a variety of additional data and analyses in the following areas:

—*Analyses Regarding Leaching of Oily Waste*—Comments questioned whether the method used by EPA (Toxicity Characteristic Leaching Procedure or TCLP) substantially underestimates the mobility of constituents in oily wastes sent to landfills because of problems with the method (e.g., filters clog), and because constituents may be released in an oily phase, as well as dissolved in aqueous leachate. EPA presents several analyses related to the potential for oil in the petroleum residuals to affect chemical analysis and risk assessment. The data presented consist of: compiled field and laboratory data on the appearance and oily nature of the residuals; the oil and grease content reported by petroleum refineries in wastes that were sent to landfills for disposal; additional analysis of archived samples for metal constituents using an alternative leaching method mentioned by a commenter, the Oily Waste Extraction Procedure (OWEP); and the calculation of leaching efficiency for organic constituents in the wastes EPA sampled.

—*Potential for Additive Risks From Multiple Sources*—Comments suggested that the groundwater and nongroundwater risks should be added together to reflect the total potential risks for the wastes evaluated. In this notice, EPA is summarizing data in the record to assess the proximity of onsite nonhazardous landfills and land treatment units at each facility surveyed to examine the potential for combined exposures to releases from both types of units.

—*The Potential Impact of Oil-Bearing Residuals Exclusion on Coke Product*—EPA proposed to exclude from the definition of solid waste oil-bearing residuals from certain petroleum industry sources that are inserted back into the refining process (including the petroleum coker unit), provided certain conditions are met. EPA cited industry data showing that such oil-bearing residuals (e.g., listed sludges) are similar to normal feedstock material. Some public comments disagreed with excluding these residuals from the definition of solid waste and argued that this action would allow the unregulated disposal of ''toxics along for the ride'' due to the transfer of constituents in the wastes to products, such as coke. In evaluating comments on the proposed rule, EPA realized it had omitted from the original docket an analysis concerning the potential impacts that recycling petroleum wastewater treatment sludge into coke production might have on metals loading in the coke product. The purpose of this document is to provide the analysis conducted in support of the proposed rule, revised to reflect more current data.

—*Comparison of Product Coke to Off-Spec Product and Fines From Thermal Processes*—Comments questioned why EPA did not assess risks from coke fines placed on piles of coke product, arguing that the waste does not become a product simply because it is placed on the pile and combined with another material. In this Notice, EPA has clarified the existing record, as noted below, but has also added additional information comparing the characteristics of coke fines and coke product.

—*Active Lives of Landfills Used for Disposal of Petroleum Refining Wastes*—Comments suggested that the active life for a landfill used by EPA in its modeling (20 years) was too short. In this Notice, EPA presents relevant data compiled from the industry survey, and calculations for the active lives of onsite landfills.

—*Characterization of On-site Land Treatment Units*—Some comments claimed that EPA had modeled land treatment units that were already regulated as hazardous waste units under RCRA, and as such, the release scenarios modeled were unlikely. In this Notice, EPA examines the regulatory status of on-site land treatment units and has compiled statistics on unit areas for nonhazardous units that managed the petroleum wastes under evaluation. These statistics are used in the revised nongroundwater analysis (see *Supplemental Background Document; Nongroundwater Pathway Risk Assessment*).

—*Potential Impact of the Headworks Exemption*—EPA proposed to modify the definition of hazardous waste to exempt wastewaters containing one of the wastes proposed for listing (clarified slurry oil storage tank sediment and/or in-line filter/separation solids), if the discharge of the wastewaters are regulated under the Clean Water Act. This is the so-called ''headworks exemption''. EPA took this action because some refineries manage residuals derived from this waste in their wastewater treatment facility during process vessel cleaning or tank washing. If this waste is listed as hazardous waste, this would cause all downstream wastewaters and treatment sludges to be derived from this waste and thus, carry the same waste code as the original waste (see 261.3(a)(2)(iv)). Little to no risk reduction benefit would be achieved from regulating this material as a hazardous waste.

Comments on this headworks exemption for CSO Sediment noted that it should also include wastewater from the other two wastes EPA proposed for listing (Spent Catalyst from Hydrotreating and Spent Catalyst from Hydrorefining). The comments pointed out that some petroleum refineries use water to cool and wash out the spent catalyst when the materials are removed from the catalytic units. Highly pressurized water is sometimes used to drill out catalyst that cannot be easily removed. EPA did not consider this practice when proposing the headworks exemption for the CSO sediment, and believes that the same rationale for proposing the exemption for wastewaters containing CSO sediment applies to wastewater containing the two spent catalyst wastes.

If the listing of the spent catalyst wastes are made final, these drill and drainage waters would be derived-from hazardous wastes. Thus, facilities that engage in this practice would risk having all down stream wastewater treatment solids considered derived from hazardous wastes, if these wastewaters are discharged to the treatment system. This was not EPA's intent. Therefore, EPA is clarifying that the exemption proposed for 261.3(a)(2)(iv)(C) will also include wastewater containing the two spent catalyst wastes (K171 and K172), as well as the CSO sediment (K170). The Agency evaluated the potential impact of including wastewater from these two wastes in the headworks exemption, and believes that including them would not result in any significant risks in the downstream wastes. In the docket to this Notice, EPA presents additional analysis to evaluate the impact of such an exemption for wastewaters containing the three wastes proposed for listing.

Comments also claimed that, as written, the headworks exemption for CSO Sediment (K170) would allow the discharge of more than merely wastewaters, and that refineries could also manage their original tank sludges in wastewater treatment systems. It was not EPA's intent to foster the discharge of all CSO sediments to wastewater treatment systems. The Agency envisions that after the tanks had been cleaned, facilities would wash the tanks out to remove the last residues and make the tanks suitable for inspection. Therefore, EPA is soliciting comments on clarifying the headworks exemption

for wastewaters containing the three petroleum wastes proposed for listing (K170, K171, and K172) so as to limit the exemption to dilute wastewaters. EPA is considering adding language to the proposed exemption clarifying that the exemption applies to wash waters from the clean out of units that contained CSO sediments (K170), Spent Hydrotreating Catalyst (K171), or Spent Hydrorefining Catalyst (K172).

• *Data Impacting Proposed Universal Treatment Standards*—EPA is including additional waste stabilization data in the docket to this Notice submitted to EPA for the calculation of treatment standards for antimony, nickel and vanadium as applied to two petroleum refining wastes that were proposed for listing (K171—Spent Catalysts from Hydrotreating, and K172—Spent Catalysts from Hydrorefining). See two documents in the docket entitled: Final Revised Calculation of Treatment Standards for Stabilization Using Data Obtained from Rollins Environmental's Highway 36 Commercial Waste Treatment Facility and GNB's Frisco, Texas Waste Treatment Facility; Memorandum from Howard Finkel, ICF Inc., to Anita Cummings, USEPA, March 1997; and High Temperature Metals Recovery (HTMR) Treatment Standards for Metals in Nonwastewater.

Clarifications and Corrections

The Agency is also taking this opportunity to clarify several points in the proposed rule.

Headworks Exemption

Comments on the headworks exemption stated that the proposal did not adequately justify this action. In this Notice, EPA shows that the proposed rule does, in fact, provide justification for this exemption in the Risk Assessment section III.F.2.(c). Specifically, in section III.F.2.(c)(2) entitled ''Disposal in Wastewater Treatment Plants,'' EPA discusses reasons why such disposal was not considered to warrant risk modeling, primarily due to existing regulatory coverage and the treatment and dilution that occurs in wastewater treatment plants (see 60 FR 57759). Furthermore, the Agency is including in this Notice additional analysis it has undertaken to further describe the dilution and treatment that is expected to occur for this practice. This analysis is presented in the docket for this Notice (see Potential Impact of the Headworks Exemption, in the Supplemental Background Document; Listing Support Analyses; Petroleum Refining Process Listing Determination).

Jurisdictional Explanation of Off-Specification Product and Fines From Thermal Processes Used as Product

EPA proposed not to list as hazardous Off-Specification Product and Fines from Thermal Processes. EPA's rationale for this is that the majority of off-specification product and fines are managed as coke product and thus are either not within the jurisdiction of RCRA or are exempt from RCRA regulation. Comments on this action stated that the proposal did not adequately explain the statutory or regulatory basis for the purported lack of jurisdiction over coke fines managed on a pile. EPA notes that the proposed rule does provide justification. However, further clarification is provided below.

In responding to the commenter, the Agency must first clarify that only particle size distinguishes coke fines from other coke product. The majority of coke is removed from the coker by hydraulic drilling. Coke fines are the smaller pieces of coke generated during this process.

Second, a jurisdictional distinction exists between coke fines that are produced from non-hazardous materials and coke fines produced from hazardous wastes (waste-derived fines). Fines generated from non-hazardous materials are simply coke product, as would be expected since they are produced from the same coking drum. These fines are combined with other coke in a product pile where the material is stored prior to sales. Thus, EPA's belief that coke fines not derived from hazardous waste are beyond RCRA jurisdiction is based on the coke fines being coke product.

In the case of waste-derived fines, so long as the fines are legitimate coke product, they are exempt from RCRA regulation unless the material exhibits a characteristic, 40 CFR 261.6(a)(3)(v). (See also RCRA section 3004(q)(2)(A)). EPA does not believe coke fails any hazardous waste characteristic, but invites comment if anyone has data to the contrary. Since the fines used as product are exempt, this material is outside the jurisdiction of the RCRA regulations. Therefore, EPA did not evaluate risks posed by such product uses of coke fines. In any event, EPA has data which indicate that the use of hazardous waste as feed material to the coker would result in little, if any, change to the qualities and the properties of the coke and fines produced. These coke fines would have essentially the same composition as fines generated from non-hazardous feed materials. The waste-derived fines are combined with other coke in a product pile for storage prior to sales and are coke product.

As noted in the Additional Information section of this Notice, the docket contains additional analyses related to the similarity of coke fines to existing coke product, and the potential impact of recycling hazardous waste to the coker. EPA invites comments on these analyses.

Corrections to Proposal

EPA inadvertently inserted some risk estimates in the preamble to the proposed rule that did not accurately reflect the risk calculations given in the background documents to the rule. To correct the record, EPA is including in today's Notice a comparison of the groundwater risks from landfill disposal that were published in the preamble to the proposed rule (see 60 FR 57747; November 20, 1995) with the correct (at that time) risk estimates given in the docket (''Background Document for Groundwater Pathway Analysis'', August 1995); this comparison is given in Table I. EPA also omitted from the preamble a risk estimate for one waste (Off-Specifications Product and Fines from Thermal Processes) that exceeded the 10^{-6} level. Table I also includes the risk estimates for this waste that were given in the background document to the proposal (See Appendix C in ''Background Document for Groundwater Pathway Analysis'').

Revised Risk Estimates

Table II summarizes the revised risk estimates for the groundwater pathway for onsite and offsite landfill disposal, and contains the results for the revised high-end analyses, the Monte Carlo analyses, and the risks that would occur if constituents (benzene and arsenic) in the wastes were capped at the level specified in the TC. Note that all revised analyses for benzene represent the combined groundwater risk from ingestion and noningestion pathways (i.e., showering).

Revised risk estimates for nongroundwater pathways for onsite and offsite land treatment are given in Table III, and reflect the modifications noted earlier in this Notice and described in detail in the docket (''Supplemental Background Document; Nongroundwater Pathway Risk Assessment''). The total carcinogenic risks are shown for various exposed populations and the methodologies used are fully explained in the supplemental background document.

The revised risk analyses for the groundwater and nongroundwater pathways complement and confirm the

original analyses given in the proposed rule. EPA believes that the additional analyses completed for these wastes support the listing determinations contained in the proposed rule, and is not proposing any new listing decisions based on the new analyses.

Off-Specification Product and Fines From Thermal Processes

While the preamble to the proposed rule did not contain a risk level for Off-Specification Product and Fines, the background document showed the risk results relied on by the Agency in the proposal as 1×10^{-5}. As shown in Table II, the revised high-end analysis for this waste yields risks that vary from 5×10^{-6} to 2×10^{-5}, depending on the approach used. The varying approaches used by EPA to calculate the risks in Table II are described in more detail in the docket (''Supplemental Groundwater Pathway Analyses''). The high-end risks for this waste are within the Agency's initial risk level of concern (see the proposed rule and the listing policy described in an earlier rulemaking for the Dyes and Pigments industry, 66 FR 66072, December 22, 1994, and the proposed rule for petroleum, 60 FR 57747).

However, the estimated groundwater risk for this waste was based on entirely one chemical (benz(a)anthracene) that was detected in only one out of six aqueous leachate (TCLP) samples at a level 8-fold below the quantitation limit. (The quantitation limit is the lowest concentration that can be reliably achieved for specific samples within acceptable limits of precision and accuracy during routine laboratory operations.) The higher risk (2×10^{-5}) arises when the value below the quantitation limit is used along with two other high-end parameters. The lower risk estimate (5×10^{-6}) results if the one measured TCLP concentration is assumed to be one of the two high-end parameters. The highest risk from the Monte Carlo analysis is 5×10^{-6} at the 95th percentile. This means that in the numerous simulation runs (10,000), the risks were found to be below this level 95% of the time.

After evaluating the additional analyses for Off-Specification Product and Fines, EPA does not consider the risk significant for a number of reasons. EPA believes that the higher risk is an overestimate because it is based on the detection in one out of six samples well below the quantitation limit. Thus, EPA has low confidence in this TCLP value and the subsequent modeling based on this number. Further analysis using the detected concentration as one of the two high-end parameters shows that the risk level drops to 5×10^{-6}. The water solubility of this chemical is also very low, indicating that its aqueous concentration is likely to be very low. In addition, this chemical is tightly adsorbed to organic material in soils and sediment, indicating that the constituent is relatively immobile in groundwater. Therefore, it is highly unlikely that this waste would present a significant risk in a groundwater scenario. For all of these reasons, EPA continues to believe that this waste should not be listed.

Land Disposal Restrictions—Revised Treatment Standards for Spent Catalysts From Hydrotreating (K171) and Hydrorefining (K171)

In the November 20, 1995 proposed rule, EPA proposed to apply the universal treatment standards (UTS) to the Petroleum Refining wastes proposed for listing (60 FR 57783). Commenters to that proposal have stated their inability to stabilize K171 and K171 nonwastewaters to the proposed 0.23 mg/L TCLP standard for vanadium. However, the commenters failed to provide data adequate for the calculation of an alternative treatment standard. Rather, the commenters provided data for the attempted stabilization of a catalyst that had not undergone extraction consistent with normal vanadium recovery. Data on stabilization alone does not reflect proper treatment for this waste; therefore, EPA does not consider these data adequate to modify the treatment standards. Subsequently, the Agency has obtained additional data suitable for the calculation of treatment standards. The Agency has used this new stabilization data, as well as data from high temperature metal recovery (HTMR), to recalculate treatment standards for these wastes. (See the docket for the two documents identified in the Additional Information section earlier in this Notice.) Based on these calculations, the proposed UTS standards as applied to K171 and K172 for antimony, nickel, and vanadium would be revised to reflect the higher of the standards calculated for stabilized wastes and HTMR residues. The antimony standard would be decreased from 2.1 mg/L TCLP to 0.07 mg/L TCLP, the nickel standard would be increased from 5.0 mg/L TCLP to 13.6 mg/L TCLP, and the vanadium standard would be increased from 0.23 mg/L TCLP to 1.6 mg/L TCLP. The Agency is today noticing the data used to calculate these proposed revisions to the UTS standards as applied to the petroleum refinery wastes. The Agency requests any additional treatment data to re-evaluate or re-calculate the treatment standards based on EPA's BDAT Protocol (see USEPA, ''Final Best Demonstrated Available Technology (BDAT) Background Document for Quality Assurance/Quality Control Procedures and Methodology'', Office of Solid Waste, October 23, 1991). In the upcoming Land Disposal Restrictions Phase IV rulemaking, the Agency will discuss in detail the proposed use of the available data for developing Universal Treatment Standards on a national basis.

Dated: March 28, 1997.

Elizabeth A. Cotsworth,

Acting Director, Office of Solid Waste.

TABLE I.—COMPARISON OF ORIGINAL FEDERAL REGISTER GROUNDWATER RISK ASSESSMENT VALUES WITH BACKGROUND DOCUMENT

Constituent	Federal Register [1]		Background document [2]	
	On-site landfill	Off-site landfill	On-site landfill	Off-site landfill
Spent Catalyst From Hydrotreating				
Benzene	9E–06	1E–05	3E–05	4E–05
Arsenic	8E–06	1E–05	2E–05	3E–05
Spent Catalyst From Hydrorefining				
Benzene	1E–05	2E–05	2E–05	3E–05

TABLE I.—COMPARISON OF ORIGINAL FEDERAL REGISTER GROUNDWATER RISK ASSESSMENT VALUES WITH BACKGROUND DOCUMENT—Continued

Constituent	Federal Register [1]		Background document [2]	
	On-site landfill	Off-site landfill	On-site landfill	Off-site landfill
Arsenic	4E–05	6E–05	7E–05	1E–04
Crude Oil Storage Tank Sediment				
Benzene	NA [3]	3E–05	NA	5E–07
Unleaded Gasoline Storage Tank Sediment				
Benzene	<1 E–06	2E–06	6E–7	4E–06
HF Alkylation Sludge				
Benzene	6E–07	3E–06	8E–07	3E–06
Off-Specification Product and Fines				
Benzo(a)anthracene	NR [4]	NR	3E–07	1E–05

[1] See 60 FR 57747, November 20, 1995.
[2] 2See ''Petroleum Refining Waste Listing Determination, Background Document for Groundwater Pathway Analysis,'' Docket Document Identification No. F–95–PRLP–S0007.
[3] Not applicable.
[4] None reported in Federal Register.

TABLE II.—COMPARISON OF GROUNDWATER RISKS FOR PETROLEUM RESIDUALS IN LANDFILLS [1]

Constituent	Revised risks [2]				TC-capped risks [3]			
	High-end risk [4]		Monte Carlo risk [5] (95th%)		High-end risk		Monte Carlo risk (95th%)	
	Off-site	On-site	Off-site	On-site	Off-site	On-site	Off-site	On-site
Clarified Slurry Oil Tank Sediment								
benzene	3E–06	3E–06	1E–06	3E–07	NA	NA	NA	NA
Hydrotreating Catalyst								
benzene	5E–05	8E–05	1E–05	8E–06	1E–05	2E–05	4E–06	4E–06
arsenic	7E–05	6E–05	1E–05	7E–06	NA	NA	NA	NA
Hydrorefining Catalyst								
benzene	4E–05	4E–05	8E–06	8E–06	2E–05	2E–05	6E–06	6E–06
arsenic	7E–04	4E–04	1E–04	1E–04	4E–04	4E–04	1E–04	1E–04
Crude Oil Storage Tank Sediment								
benzene	3E–05	NA	5E–06	NA	2E–05	NA	3E–06	NA
Unleaded Gasoline Storage Tank Sediment								
benzene	5E–06	2E–06	2E–06	6E–07	3E–06	1E–06	1E–06	6E–07
HF Alkylation Sludge								
benzene	6E–06	6E–06	2E–06	2E–07	NA	NA	2E–06	2E–07
Off-Specification Product and Fines From Thermal Processes								
Benzo(a)-anthracene	5E–06 [6] 2E–05	3E–06 [6] 2E–05	4E–06 [7] 5E–06	1E–07	NA	NA	NA	NA

[1] Risk presented as carcinogenic risk.
[2] The revised risk includes an indirect risk from showering (6.05×10^{-5} risk per 1 mg/L benzene).
[3] Input leaching rates were capped at TC regulatory levels for maximum allowable TCLP values for disposal in Subtitle D landfills (0.5 mg/L for benzene and 5.0 mg/L for arsenic). ''NA'' means either the TC level was not exceeded, or no TC level exists for a chemical.
[4] Risks were estimated using high-end values for two most sensitive parameters, while the remaining parameters are kept at median values.

[5] Risks were estimated using Monte Carlo simulation runs; at the 95th percentile level, calculated risks were found to be below this level 95% of the time.

[6] The lower risk was obtained by using the one detected value (a ''J-value'' below the quantitation limit) as one of the two high-end parameters.

[7] The lower risk was obtained by using only the J-value in the Monte Carlo simulation runs.

TABLE III.—NON-GROUNDWATER RISKS FOR PETROLEUM RESIDUALS IN LAND TREATMENT UNITS

Individual waste streams	On-site land treatment unit high-end total carcinogen risk				Off-site land treatment unit high-end total carcinogen risk			
	Home gardener	Adult resident	Subsistence farmer	Subsistence fisher	Home gardener	Adult resident	Subsistence farmer	Subsistence fisher
Clarified Slurry Oil Tank Sediment	1E–04	2E–05	2E–04	4E–05	3E–05	1E–05	2E–05	3E–05
Crude Oil Tank Sediment	3E–07	1E–07	4E–07	2E–07	2E–07	8E–08	2E–07	1E–07
Unleaded Gasoline Tank Sediment	4E–07	9E–08	2E–07	1E–07	3E–07	9E–08	4E–07	1E–07
Sulfur Complex Sludge	1E–07	3E–08	6E–08	3E–08	5E–08	1E–08	4E–08	1E–08
HF Alkylation Sludge	3E–08	7E–09	1E–08	8E–09	3E–08	7E–09	4E–08	9E–09
Sulfuric Acid Alkylation Sludge	2E–09	1E–09	3E–10	2E–09	5E–10	3E–10	3E–10	7E–10
Off-Spec Product & Fines	6E–08	3E–08	7E–08	4E–08	6E–08	2E–08	9E–08	4E–08

[FR Doc. 97–8816 Filed 4–7–97; 8:45 am]
BILLING CODE 6560–50–P

ENVIRONMENTAL PROTECTION AGENCY

40 CFR Part 268

[EPA–F–97–PH3A–FFFFF; FRL–5808–4]

RIN 2050 AE05

Land Disposal Restrictions—Phase IV: Treatment Standards for Characteristic Metal Wastes; Notice of Data Availability

AGENCY: Environmental Protection Agency (EPA).

ACTION: Extension of the comment period.

SUMMARY: EPA has received requests to extend the comment period on the notice of data availability (NODA) published in the **Federal Register** on March 5, 1997 (62 FR 10004). The NODA solicited public comments on studies, and the results of a Peer Review of those studies, pertaining to whether the addition of iron filings (and iron dust) to lead-contaminated spent foundry sand is a means of diluting the waste impermissibly rather than treating it to conform with the requirements of the LDR rules. The NODA addressed whether this practice stabilizes (or otherwise treats) lead, the chief hazardous constituent found in the spent sand, so that the lead will not migrate through the environment when the spent sand is land disposed. This document extends the comment period for the NODA for 30 days.

DATES: Comments are due by May 8, 1997.

ADDRESSES: To submit comments, the public must send an original and two copies to Docket Number F–97–PH3A–FFFFF, located at the RCRA Docket. The mailing address is: RCRA Information Center, U.S. Environmental Protection Agency (5305W), 401 M. Street, SW, Washington, DC 20460. RCRA Information Center is located at 1235 Jefferson Davis Highway, First Floor, Arlington, Virginia. The RCRA Information Center is open for public inspection and copying of supporting information for RCRA rules from 9:00 a.m. to 4:00 p.m. Monday through Friday, except for Federal holidays. The public must make an appointment to review docket materials by calling (703) 603–9230. The public may copy a maximum of 100 pages from any regulatory document at no cost. Additional copies cost $0.15 per page.

FOR FURTHER INFORMATION CONTACT: For general information or to order paper copies of this **Federal Register** document, call the RCRA Hotline. Callers within the Washington, Metropolitan Area must dial 703–412–9810 or TDD 703–412–3323 (hearing impaired). Long-distance callers may call 1–800–424–9346 or TDD 1–800–553–7672. The RCRA Hotline is open Monday-Friday, 9:00 a.m. to 6:00 p.m., Eastern Standard Time. For information on this notice, contact Mary Cunningham at (703) 308–8453, John Austin at (703) 308–0436 or Rhonda Craig at (703) 308–8771, Office of Solid Waste, 401 M Street, SW, Washington, DC 20460.

List of Subjects in 40 CFR Part 268

Environmental protection, Hazardous waste, Reporting and recordkeeping requirements.

Dated: April 3, 1997.

Elizabeth A. Cotsworth,

Acting Director, Office of Solid Waste.

[FR Doc. 97–9093 Filed 4–7–97; 8:45 am]
BILLING CODE 6560–50–P

DEPARTMENT OF COMMERCE

National Oceanic and Atmospheric Administration

50 CFR Part 648

[Docket No. 970318057–7057–01; I.D. 022097C]

RIN 0648–AJ42

Fisheries of the Northeastern United States; Fishery Management Plan for the Summer Flounder, Scup, and Black Sea Bass Fisheries; Recreational Measures for the 1997 Summer Flounder Fishery

AGENCY: National Marine Fisheries Service (NMFS), National Oceanic and Atmospheric Administration (NOAA), Commerce.

ACTION: Proposed rule, request for comments.

SUMMARY: NMFS issues this proposed rule to amend the regulations implementing the Fishery Management Plan for the Summer Flounder, Scup, and Black Sea Bass Fisheries (FMP). This rule proposes a possession limit of 10 fish per person and a minimum fish size of 14.5 inches (36.8 cm) for the 1997 summer flounder recreational fishery. The intent of this rule is to comply with implementing regulations for the fishery that require NMFS to publish measures for the current fishing year that will prevent overfishing of the resource.

DATES: Public comments must be received on or before May 8, 1997.

ADDRESSES: Copies of the Environmental Assessment prepared for the 1997 summer flounder specifications and supporting documents used by the Monitoring Committee are available from: Executive Director, Mid-Atlantic Fishery Management Council, Room 2115, Federal Building, 300 S. New Street, Dover, DE 19901–6790. Comments should be sent to: Regional Administrator, NMFS, One Blackburn Drive, Gloucester, MA 01930. Please mark the outside of the envelope ''Comments on the Recreational Fishing Measures for Summer Flounder.''

FOR FURTHER INFORMATION CONTACT: Regina L. Spallone, Fishery Policy Analyst, (508)281–9221.

SUPPLEMENTARY INFORMATION:

The FMP was developed jointly by the Mid-Atlantic Fishery Management Council (Council) and the Atlantic States Marine Fisheries Commission (Commission), in consultation with the New England and South Atlantic Fishery Management Councils. Implementing regulations for the fishery are found at 50 CFR part 648.

Section 648.100 outlines the process for determining annual commercial and recreational catch quotas and other restrictions for the summer flounder fishery. The Summer Flounder Monitoring Committee (Committee), made up of representatives from the Commission, the Council, the New England Fishery Management Council, and NMFS, is required to review, on an annual basis, scientific and other relevant information and to recommend a quota and other restrictions necessary to achieve a fishing mortality rate (F) of 0.53 in 1993 through 1995, 0.41 in 1996, 0.30 in 1997, and 0.23 in 1998 and thereafter, provided the allowable levels of fishing in 1996 and 1997 may not exceed 18.518 million lb (8.4 million kg), unless such levels have an associated F of 0.23. This schedule is mandated by the FMP to prevent overfishing and to rebuild the summer flounder resource.

The Committee reviews the following information annually: (1) Commercial and recreational catch data; (2) current estimates of stock mortality; (3) stock status; (4) recent estimates of recruitment; (5) virtual population analysis (a method for analyzing fish stock abundance); (6) levels of regulatory noncompliance by fishermen or individual states; (7) impact on fish size and net mesh regulations; (8) impact of gear, other than otter trawls, on the mortality of summer flounder; and (9) other relevant information. Pursuant to § 648.100, after this review, the Committee recommends to the Council and Commission management measures to ensure achievement of the appropriate fishing mortality rate. The Council and Commission, in turn, make a recommendation to the Regional Administrator.

Final specifications for the 1997 summer flounder fishery were published on March 7, 1997 (62 FR 10473), including a coastwide recreational harvest limit of 7,407,532 lb (3.36 million kg). The recreational season, possession limit, and minimum size for 1997 were not established as part of the final specifications because recreational catch data for 1996 were not available for the Committee's use in evaluating the effectiveness of the 1996 measures. Shortly after preliminary 1996 data became available, the Committee met to review those data, and to recommend measures for the 1997 recreational fishery intended to achieve the recreational harvest limit. The Committee recommended an individual possession limit of six fish per person and a 15–inch (35.6–cm) minimum fish size. This recommendation was based on projected 1996 recreational landings of 11.55 million lb (5.2 million kg). That level is 4.14 million lb (1.9 million kg), or 36.2 percent, over the 1996 recreational harvest limit of 7.41 million lb (3.4 million kg).

While reviewing the Committee's recommendations in December 1996, the Council and Commission were provided with new information that indicated projected recreational landings for 1996 would be less than previously estimated. The information presented the Council and Commission indicates that projected recreational landings in 1996 would be 10.4 million lb (4.7 million kg), thus exceeding the 1996 harvest limit by 3 million lb (1.4 million kg), or 29 percent. Based on this updated information, the Council and Commission rejected the Committee's recommendations. On December 17, 1996, they recommended to the Regional Administrator a possession limit of 10 fish and a 14.5–inch (36.8–cm) minimum fish size for the 1997 recreational summer flounder fishery. These measures are proposed by this action.

Assuming that availability of summer flounder and recreational effort will not change in 1997 relative to 1996, the Council and Commission acknowledged that the recreational fishery required further constraints to prevent anglers' exceeding the 1997 harvest limit. However, noting that recreational landings in 1995 and 1994 were below the harvest limit by 12 percent and 29 percent, respectively, the Council and Commission did not believe that a 29 percent reduction was necessary in 1997.

In making their recommendation for 1997, the Council and Commission reviewed an analysis of the effects of various size and possession limits on 1996 summer flounder recreational landings. Intercept data indicated that the recreational sector was constrained by the eight fish possession limit in 1996. Assuming 100 percent compliance and similar management measures in 1997, those same measures would effect a 9.9 percent reduction in landings in 1997 versus 1996. An increase to a 15–inch (38.1–cm) fish size with the eight fish possession limit would result in a 35.4 percent reduction. Increasing the possession limit to 10 fish, would result in a 9.7 percent reduction for a 14–inch (35.6–cm) fish size, and a 35.3 percent reduction for a 15–inch (38.1–cm) fish size.

The Council and Commission noted the variability of the data, the fact that participants were constrained by the possession limit in 1996, and that an increase in possession limit for the same fish size would have had a negligible effect on landings (a reduction of about 0.1 percent). The Council and Commission felt the 35 percent reductions associated with the 15–inch (38.1 cm) fish size were too severe, and the 9 percent reductions associated with the 14–inch (35.6–cm) fish size were not adequate. Therefore, they recommended a 14.5–inch (36.8–cm) fish size and a 10 fish possession limit. The recommendation effectively splits the reductions associated with the two fish sizes, and would result in approximately a 22.5 percent reduction in recreational landings in 1997. Although the proposed possession limit represents an increase in 1997 versus 1996, from 8 to 10 fish, the data indicate that participants would not have been any more constrained by a 10 fish possession limit, versus an eight fish limit, as shown above.

The necessary reductions in landings would be reached by the increased fish size. The increase in possession limit is proposed to offset any potential decreases in participation that may occur because of the increase in the minimum size limit. Based on 1995 angler intercept data, summer flounder was the primary species sought in an estimated 5.9 percent of the reported trips in the North Atlantic region, and 27.3 percent in the Mid-Atlantic region. Left-eyed flounders, of which summer flounder is one of several species, were

the primary species sought in an estimated 2.4 percent of the reported trips in the South Atlantic region, which includes North Carolina. These data include trips by all modes including party/charter and private/rental vessels, as well as fishing from shore and man-made structures (e.g., piers). These data, however, cannot predict the extent to which participation would be affected by the proposed measures. Thus, the reductions are dependent upon the assumption that participation (effort), as well as summer flounder availability, will not change in 1997.

The Council and Commission believe that this combination of limits, the 14.5–inch (36.8–cm) minimum fish size, which is an increase from the limit in place in 1996, and the 10 fish possession limit, will constrain anglers to the 7,407,532 lb (3.36 million kg) harvest limit in 1997.

Classification

This proposed rule has been determined to be not significant for purposes of E.O. 12866.

The Assistant General Counsel for Legislation and Regulation of the Department of Commerce certified to the Chief Counsel for Advocacy of the Small Business Administration that this proposed rule, if adopted, would not have a significant economic impact on a substantial number of small entities, such as the charter boats and head boats that serve the recreational fishery, as follows:

The 1997 coastwide recreational harvest limit is unchanged from 1996. The combination of management measures (minimum fish size and possession limit) is proposed to be revised to allow recreational anglers to harvest summer flounder at a level consistent with the 1997 coastwide recreational harvest limit. Revisions are proposed because projections indicate that 1996 recreational landings exceeded the harvest limit by 29 percent. Assuming that the availability of summer flounder and recreational effort do not change in 1997 relative to 1996, further constraints would be required to prevent anglers from exceeding the 1997 harvest limit. Noting the variability in recreational landings (1995 and 1994 were below the harvest limit by 12 percent and 29 percent, respectively), however, the Council and Commission do not believe that a 29–percent reduction in the 1997 harvest limit is necessary. Data indicate that, if the same measures were in place for 1997 as were in place for 1996, a 9.9–percent reduction in landings would be realized, assuming 100–percent compliance.

An increase to a 15–inch (38.1–cm) fish size, with the same possession limit, would result in a 35.4–percent reduction. An increase in the possession limit to 10 fish, with a 14–inch (35.6–cm) minimum fish size, would result in a 9.7–percent reduction in landings and, with a 15–inch (38.1–cm) minimum fish size, would result in a 35.3–percent reduction in landings. The Council and Commission further noted the variability of the data, the fact that participants were constrained by the possession limit in 1996, and that an increase in possession limit for the same fish size would have had a negligible effect on landings (a reduction of about 0.1 percent). They felt the 35–percent reductions associated with the 15–inch (38.1–cm) fish size were too severe, and the 9– percent reductions associated with the 14–inch (35.6–cm) fish size were not adequate. They recommended a 14.5–inch (36.8–cm) minimum fish size and a 10 fish possession limit. The recommendation effectively splits the reductions associated with the two fish sizes, and would result in approximately a 22.5–percent reduction in 1997 recreational landings over the 1996 landings. The intent of this reduction is to bring landings in line with the 1997 harvest limit, which, as noted above, is unchanged from 1996. Although the proposed possession limit represents an increase in 1997 versus 1996, from 8 to 10 fish, the data indicate that participants would not have been any more constrained by a 10–fish possession limit, versus an 8–fish limit. Thus, the necessary reductions in landings would be reached by the increased fish size. The increase in possession limit is proposed to offset any potential decrease in participation that may harm the charter/party boat and rental sectors of the industry.

There are an estimated 442 vessels permitted to fish as charter/party vessels in the summer flounder fishery in the EEZ, all of which would readily qualify as small entities (having annual receipts of less than $2 million). Based on 1995 angler intercept data, summer flounder were the primary species sought in 5.9 percent of the reported trips in the North Atlantic region and 27.3 percent in the Mid-Atlantic region. Left-eyed flounders, of which summer flounder is one of several species, were the primary species sought in an estimated 2.4 percent of the reported trips in the South Atlantic region, which includes North Carolina. These data include trips by all modes, including party/charter and private/rental vessels, as well as fishing from shore and man-made structures (e.g., piers). These data, however, cannot predict the extent to which participation would be affected by the proposed measures. Thus, the reductions are dependent upon the assumption that participation (effort), as well as summer flounder availability, will not change in 1997.

It is not known by how much the increase in minimum fish size will affect compliance costs. That is, the available data do not indicate how often the total amount retained would be less on a trip with a 14.5–inch (36.8–cm) minimum size compared to a 14–inch (35.6–cm) minimum size. In 1995, approximately 26 percent of the summer flounder landed were 14 inches (35.6 cm)—denoting a range of between 14.0 (35.6 cm) and 14.9 inches (37.8 cm). The data are available as whole-inch increments, requiring extrapolation to determine impacts of half-inch changes. Since the increase in possession limit is expected to mitigate a potential discouragement of participation, it is expected that no vessels will cease operations for lack of participation because of this action. Likewise, since, on average, approximately 12 percent of the reported trips declare summer flounder as the primary species sought coastwide, ex-vessel revenues are not expected to increase or decrease by 5 percent or more for 20 percent or more of these participants in the recreational fishery. This presumption is supported by the fact that the 1997 coastwide recreational harvest limit is unchanged from the 1996 limit. That harvest limit is part of the total annual specifications package for the summer flounder fishery and was already certified to have no significant impact on a substantial number of small entities. As a result, an initial regulatory flexibility analysis was not prepared.

List of Subjects in 50 CFR Part 648

Fisheries, Fishing, Reporting and recordkeeping requirements.

Dated: April 2, 1997.

Rolland A. Schmitten,

Assistant Admiistrator for Fisheries, National Marine Fisheries Service.

For the reasons set out in the preamble, 50 CFR part 648 is proposed to be amended as follows:

PART 648—FISHERIES OF THE NORTHEASTERN UNITED STATES

1. The authority citation for part 648 continues to read as follows:

Authority: 16 U.S.C. 1801 *et seq.*

2. In § 648.103, paragraph (b) is revised to read as follows:

§ 648.103 Minimum fish sizes.

* * * * *

(b) The minimum size for summer flounder is 14.5 inches (36.8 cm) TL for all vessels that do not qualify for a moratorium permit, or for party and charter boats holding moratorium permits, but fishing with passengers for hire or carrying more than three crew members, if a charter boat, or more than five crew members, if a party boat.

* * * * *

3. In § 648.105, the first sentence of paragraph (a) is revised to read as follows:

§ 648.105 Possession restrictions.

(a) No person shall possess more than 10 summer flounder in, or harvested from, the EEZ unless that person is the owner or operator of a fishing vessel issued a summer flounder moratorium permit or is issued a summer flounder dealer permit. * * *

* * * * *

[FR Doc. 97–8859 Filed 4–7–97; 8:45 am]

BILLING CODE 3510–22–F

Notices

Federal Register
Vol. 62, No. 67
Tuesday, April 8, 1997

This section of the FEDERAL REGISTER contains documents other than rules or proposed rules that are applicable to the public. Notices of hearings and investigations, committee meetings, agency decisions and rulings, delegations of authority, filing of petitions and applications and agency statements of organization and functions are examples of documents appearing in this section.

DEPARTMENT OF AGRICULTURE

Agricultural Marketing Service

[Docket No. FV97–932–1 NC]

Notice of Request for Extension and Revision of a Currently Approved Information Collection

AGENCY: Agricultural Marketing Service, USDA.

ACTION: Notice and request for comments.

SUMMARY: In accordance with the Paperwork Reduction Act of 1995 (44 U.S.C. Chapter 35), this notice announces the Agricultural Marketing Service's (AMS) intention to request an extension for and revision of a currently-approved information collection for olives grown in California, Marketing Order 932 (7 CFR 932).

DATES: Comments on this notice must be received by June 9, 1997 to be assured of consideration.

ADDITIONAL INFORMATION OR COMMENTS: Contact Terry Vawter, Marketing Specialist, California Marketing Field Office, Fruit and Vegetable Division, Agricultural Marketing Service, U.S. Department of Agriculture, 2202 Monterey Street, Suite 102B, Fresno, CA 93721, Tel: (209) 487–5901, Fax: (209) 487–5906.

SUPPLEMENTARY INFORMATION:

Title: Olives Grown in California, Marketing Order No. 932.

OMB Number: 0581–0142.

Expiration Date of Approval: September 30, 1997.

Type of Request: Intent to extend and revise a currently-approved information collection.

Abstract: Marketing order programs provide an opportunity for producers of fresh fruits, vegetables, and specialty crops, in a specified production area, to work together to solve marketing problems that cannot be solved individually. Order regulations help ensure adequate supplies of good quality product and adequate returns to producers. Under the Agricultural Marketing Agreement Act of 1937 (AMAA), as amended (7 U.S.C. 601–674), marketing order programs are established if favored by producers in referenda. The handling of the commodity is regulated. The Secretary of Agriculture is authorized to oversee order operations and issue regulations recommended by a committee of representatives from each commodity industry.

The information collection requirements in this request are essential to carry out the intent of the AMAA, to provide the respondents the type of service they request, and to administer the California olive marketing order program.

The California olive marketing order, which has been operating since 1965, authorizes the issuance of grade and size standards, and inspection requirements. The order also has authority for research and development projects, including paid advertising. Pursuant to section 608(e)(1) of the AMAA, import grade and condition requirements are implemented on olives imported into the United States.

The order and its rules and regulations authorize the California Olive Committee (committee), the agency responsible for local administration of the order, to require handlers and producers to submit certain information. Much of this information is compiled in aggregate and provided to the industry to assist in marketing decisions.

The committee has developed forms as a means for persons to file required information with the committee relating to olives supplies, shipments, dispositions, and other information necessary to effectively carry out the purpose of the Act and the order. California olives are shipped year-round and these forms are used accordingly. A USDA form is used to allow growers to vote on amendments to or continuance of the order.

Olive producers who are nominated by their peers to serve as representatives on the committee must file nomination forms with the Secretary. Handler representatives must also file nomination forms with the Secretary.

Since the previous submission, there has been a decrease in the number of handlers; and, therefore, the number of recordkeepers. In addition, all current handlers have representatives on the committee. Handlers are also required to file forms relating to the receipt, storage, use, disposition, inventory, and shipments of olives.

Formal rulemaking amendments to the order must be approved in referenda conducted by the Secretary. Also, the Secretary may conduct a continuance referendum to determine industry support for continuation of the order. Handlers are asked to sign an agreement to indicate their willingness to abide by the provisions of the order whenever the order is amended. These forms are included in this request.

These forms require the minimum information necessary to effectively carry out the requirements of the order, and their use is necessary to fulfill the intent of the AMAA as expressed in the order, and the rules and regulations issued under the order.

The information collected is used only by authorized representatives of the USDA, including AMS, Fruit and Vegetable Division regional and headquarter's staff, and authorized employees of the committee. Authorized committee employees and the industry are the primary users of the information and AMS is the secondary user.

Estimate of Burden: Public reporting burden for this collection of information is estimated to average .28 hours per response.

Respondents: California olive producers and handlers.

Estimated Number of Respondents: 692.

Estimated Number of Responses per Respondent: 19.82.

Estimated Total Annual Burden on Respondents: 3,881 hours.

Comments: Comments are invited on: (1) Whether the proposed collection of the information is necessary for the proper performance of the functions of the agency, including whether the information will have practical utility; (2) the accuracy of the agency's estimate of the burden of the proposed collection of information including the validity of the methodology and assumptions used; (3) ways to enhance the quality, utility and clarity of the information to be collected; and (4) ways to minimize the burden of the collection of information on those who are to respond, including through the use of appropriate

automated, electronic, mechanical, or other technological collection techniques or other forms of information technology.

Comments should reference OMB No. 0581–0142 and California Olive Marketing Order No. 932, and be sent to the USDA in care of Terry Vawter, Marketing Specialist, California Marketing Field Office, Fruit and Vegetable Division, Agricultural Marketing Service, U.S. Department of Agriculture, 2202 Monterey Street, Suite 102B, Fresno, CA 93721. All comments received will be available for public inspection during regular business hours at the same address.

All responses to this notice will be summarized and included in the request for OMB approval. All comments will become a matter of public record.

Dated: April 1, 1997.

Robert C. Keeney,

Director, Fruit and Vegetable Division.

[FR Doc. 97–8903 Filed 4–7–97; 8:45 am]

BILLING CODE 3410–02–P

DEPARTMENT OF AGRICULTURE

Agricultural Marketing Service

[No. LS–97–006]

Notice of Request for Extension and Revision of a Currently Approved Information Collection

AGENCY: Agricultural Marketing Service, USDA.

ACTION: Notice and request for comments.

SUMMARY: In accordance with the Paperwork Reduction Act of 1995 (44 U.S.C. Chapter 35), this notice announces the Agricultural Marketing Service's (AMS) intention to request an extension of and revision to the currently approved collections of information for 7 CFR Part 54—Meats, Prepared Meats, and Meat Products (Grading, Certification, and Standards), which includes Form LS–313, ''Application for Grading or Certification Service'' and Form LS–315, ''Application for Commitment Grading or Certification Service.''

DATES: Comments on this notice must be received by June 9, 1997, to be assured consideration.

ADDITIONAL INFORMATION OR COMMENTS: Contact Terry L. Lutz, Assistant to the Chief, Meat Grading and Certification Branch, Livestock and Seed Division, AMS, USDA, STOP 0248, Room 2628–S, P.O. BOX 96456, Washington, DC 20090–6456, Telephone (202) 720–1114, or FAX (202) 690–4119.

SUPPLEMENTARY INFORMATION:

Title: 7 CFR Part 54—Meats, Prepared Meats, and Meat Products (Grading, Certification, and Standards).

OMB Number: 0581–0124.

Expiration Date of Approval: September 30, 1997.

Type of Request: Extension and revision of a currently approved collections of information.

Abstract: The application for meat grading and certification services requests Department of Agriculture employees to perform such services in the requesting establishment. The information contained on the applications constitutes an agreement between USDA and the requesting establishment.

The Agricultural Marketing Act of 1946, as amended, authorizes the Secretary of Agriculture to provide voluntary Federal meat grading and certification services that facilitate the marketing of meat and meat products. The Meat Grading and Certification (MGC) Branch provides these services pursuant to 7 CFR Part 54—Meats, Prepared Meats, and Meat Products (Grading, Certification, and Standards).

Due to the voluntary nature of grading and certification services, 7 CFR Part 54 contains provisions for the collection of fees from users of MGC Branch services that as nearly as possible are equal to the cost of providing the requested services. Applicants (individual or businesses with financial interest in the product) may request MGC Branch services through either submission of Form LS–313 or Form LS–315.

Congress did not specifically authorize this collections of information, but as a user-fee branch, completion and submission of Form LS–313 or Form LS–315 serves as an agreement by the requester to pay for services provided.

Estimate of Burden: Public reporting burden for this collection of information is estimated to average .0208 hours per response.

Respondents: Livestock and meat industry or other for-profit businesses.

Estimated Number of Respondents: 1,154.

Estimated Number of Responses per Respondent: 21.028.

Estimated Total Annual Burden on Respondents: 504 hours.

Comments are invited on: (1) Whether the proposed collection of information is necessary for the proper performance of the functions of the agency, including whether the information will have practical utility; (2) the accuracy of the agency's estimate of the burden of the proposed collection of information including the validity of the methodology and assumptions used; (3) ways to enhance the quality, utility, and clarity of the information to be collected; and (4) ways to minimize the burden of the collection of information on those who are to respond, including through the use of appropriate automated, electronic, mechanical, or other technological collection techniques or other forms of information technology. Comments may be sent to Terry L. Lutz, Assistant to the Chief, Meat Grading and Certification Branch, Livestock and Seed Division, AMS, USDA, STOP 0248, Room 2628–S, P.O. BOX 96456, Washington, DC 20090–6456.

All responses to this notice will be summarized and included in the request for OMB approval. All comments will also become a matter of public record.

Dated: April 2, 1997.

Barry L. Carpenter,

Director, Livestock and Seed Division.

[FR Doc. 97–8923 Filed 4–7–97; 8:45 am]

BILLING CODE 3410–02–M

DEPARTMENT OF AGRICULTURE

Food and Consumer Service

Nutrition Program for the Elderly; Initial Level of Assistance From October 1, 1996 to September 30, 1997

AGENCY: Food and Consumer Service, USDA.

ACTION: Notice.

SUMMARY: This notice announces the initial level of per-meal assistance for the Nutrition Program for the Elderly (NPE) for Fiscal Year 1997. The Fiscal Year 1997 initial level of assistance is set at $.5857 for each eligible meal in accordance with section 311(a)(4) of the Older Americans Act of 1965, as amended by section 310 of the Older Americans Act Amendments of 1992 and preempted by the Agriculture, Rural Development, Food and Drug Administration, and Related Agencies Appropriations Act, 1996. This is a slight reduction from the Fiscal Year 1996 level of $.5864. The appropriation for the program was decreased from $150 million in Fiscal Year 1996 to $140 million in Fiscal Year 1997.

EFFECTIVE DATE: October 1, 1996.

FOR FURTHER INFORMATION CONTACT: Ellen Henigan, Chief, Schools and Institutions Branch, Food Distribution Division, Food and Consumer Service, U.S. Department of Agriculture, 3101 Park Center Drive, Alexandria, Virginia 22302–1594 or telephone (703) 305–2644.

SUPPLEMENTARY INFORMATION:

Executive Order 12866

This action is exempted from review by the Office of Management and Budget under Executive Order 12866.

Executive Order 12372

This program is listed in the Catalog of Federal Domestic Assistance under Nos. 10.550 and 10.570 and is subject to the provisions of Executive Order 12372, which requires intergovernmental consultation with State and local officials (7 CFR part 3015, subpart V, and final rule-related notices published at 48 FR 29114, June 24, 1983 and 49 FR 22676, May 31, 1984.)

Paperwork Reduction Act of 1995 and Regulatory Flexibility Act

This notice imposes no new reporting or recordkeeping provisions that are subject to Office of Management and Budget review in accordance with the Paperwork Reduction Act of 1995 (44 U.S.C. 3507). This action is not a rule as defined by the Regulatory Flexibility Act (5 U.S.C. 601–612) and thus is exempt from the provisions of that Act.

Legislative Background

Section 310 of Public Law (Pub. L.) 102–375, the Older Americans Act Amendments of 1992, amended section 311(a)(4) of the Older Americans Act of 1965, 42 U.S.C. 3030a(a)(4), to require the Secretary of Agriculture to maintain an annually programmed level of assistance equal to the greater of: (1) The current appropriation divided by the number of meals served in the preceding fiscal year; or (2) 61 cents per meal adjusted annually beginning with Fiscal Year 1993 to reflect changes in the Consumer Price Index. Section 311(c)(2) of the Older Americans Act (42 U.S.C. 3030a(c)(2)) was amended to provide that the final reimbursement claims must be adjusted so as to utilize the entire program appropriation for the fiscal year for per-meal support. However, the Agriculture, Rural Development, Food and Drug Administration, and Related Agencies Appropriations Act of 1996 (Pub. L. 104–37) imposed, for Fiscal Year 1996 and succeeding years, the same NPE rate management requirements as applied to Fiscal Year 1994. That is, Title IV, Domestic Food Programs, of the Appropriations Act provides that ''. . . hereafter notwithstanding any other provision of law, for meals provided pursuant to the Older Americans Act of 1965, a maximum rate of reimbursement to States will be established by the Secretary, subject to reduction if obligations would exceed the amount of available funds, with any unobligated funds to remain available only for obligation in the fiscal year beginning October 1, 1996.''

Notwithstanding the initial rates established by the Older Americans Act, the Department is required to comply with the spending clause of the U.S. Constitution and 31 U.S.C. 1341(a)(1)(A) (known as the Antideficiency Act), which prohibit the obligation or expenditure of funds in excess of the available appropriation. Thus the Department is required to establish (and if necessary, adjust) rates in such a manner as to not exceed the program appropriation.

Fiscal Year 1996 Level of Assistance

Based on its projection of the number of meals to be claimed during the fiscal year, and in light of constitutional and statutory prohibitions on obligating or spending funds in excess of the available appropriation, the Department announced an initial per-meal reimbursement rate of $.5864 for Fiscal Year 1996, the highest rate which it believed could be sustained throughout the fiscal year. This initial level of per-meal assistance was announced in the March 18, 1996 **Federal Register** (61 FR 10983).

The Department's meal service projection for Fiscal Year 1996 assumed a slightly higher rate of growth than occurred in the preceding fiscal year. This initial per-meal support level of $.5864 was sustained throughout Fiscal Year 1996, and thus no adjustment was necessary to keep expenditures within the limit of the $150 million NPE appropriation established by Pub. L. 104–37. Funds in the amount of $5.5 million were not paid out for Fiscal Year 1996 and will, in accordance with the legislative mandate in Pub. L. 104–37, be carried over into Fiscal Year 1997 and expended in per-meal reimbursement for that year.

Fiscal Year 1997 Initial Level of Assistance

It is the Department's goal to establish the highest rate that can be sustained throughout the fiscal year so as to maximize the flow of program funds to States during the fiscal year. However, the Department wants also to minimize the possibility of a rate reduction and the hardship it causes to program operators. In order to guard against the need for a reduction, the Department, once again, has projected a slightly higher rate of growth in meal service than occurred in the preceding fiscal year. Based on its projections, the Department announces an initial per-meal support level of $.5857, which will not be increased, and which will be decreased only if necessary to keep expenditures within the limit of the $140 million NPE Fiscal Year 1997 appropriation established by Pub. L. 104–180 and the $5.5 million available from Fiscal Year 1996. Any of these funds not paid out for Fiscal Year 1997 reimbursement will, in accordance with Pub. L. 104–180, remain available through Fiscal Year 1998. In the unlikely event that the rate needs to be decreased, States will be notified directly.

Dated: March 27, 1997.

William E. Ludwig,

Administrator, Food and Consumer Service.

[FR Doc. 97–8913 Filed 4–7–97; 8:45 am]

BILLING CODE 3410–30–U

BROADCASTING BOARD OF GOVERNORS

Sunshine Act Meeting

DATE AND TIME: April 15, 1997; 9:00 a.m.

PLACE: Cohen Building, Room 3321, 330 Independence Ave., SW., Washington, DC 20547.

CLOSED MEETING: The members of the Broadcasting Board of Governors (BBG) will meet in closed session to review and discuss a number of issues relating to U.S. Government-funded nonmilitary international broadcasting. They will address internal procedural, budgetary, and personnel issues, as well as sensitive foreign policy issues relating to potential options in the U.S. international broadcasting field. This meeting is closed because if open it likely would either disclose matters that would be properly classified to be kept secret in the interest of foreign policy under the appropriate executive order (5 U.S.C. 552b.(c)(1)) or would disclose information the premature disclosure of which would be likely to significantly frustrate implementation of a proposed agency action. (5 U.S.C. 552b.(c)(9)(B)). In addition, part of the discussion will relate solely to the internal personnel issues of the BBG or the International Broadcasting Bureau. (5 U.S.C. 552b.(c)(2) and (6)).

CONTACT PERSON FOR MORE INFORMATION: Persons interested in obtaining more information should contact Brenda Thomas at (202) 401–3736.

Dated: April 4, 1997.

David W. Burke,

Chairman.

[FR Doc. 97–9105 Filed 4–4–97; 2:14 pm]

BILLING CODE 82301–01–M

DEPARTMENT OF COMMERCE

International Trade Administration

[A–122–601]

Brass Sheet and Strip From Canada; Final Results of Antidumping Duty Administrative Review

AGENCY: Import Administration, International Trade Administration, Department of Commerce.

ACTION: Notice of Final Results of Antidumping Duty Administrative Review.

SUMMARY: On December 6, 1996, the Department of Commerce (the Department) published the preliminary results of its administrative review of the antidumping duty order on brass sheet and strip (BSS) from Canada (61 FR 64666). This review covers exports of this merchandise to the United States by one manufacturer/exporter, Wolverine Tube (Canada) Inc. (Wolverine), during the period January 1, 1995 through December 31, 1995. The review indicates the existence of no dumping margins.

We gave interested parties an opportunity to comment on our preliminary results. Based on our analysis of the comments received, we have changed our results from those published in the preliminary results.

EFFECTIVE DATE: April 8, 1997.

FOR FURTHER INFORMATION CONTACT: Maureen McPhillips or Linda Ludwig, Office of AD/CVD Enforcement, Group III, Import Administration, International Trade Administration, U.S. Department of Commerce, 14th Street and Constitution Avenue, N.W., Washington, D.C. 20230; telephone: (202) 482–3019 or 482–3833, respectively.

SUPPLEMENTARY INFORMATION:

Applicable Statute and Regulations

Unless otherwise indicated, all citations to the Tariff Act of 1930, as amended (the Tariff Act), are references to the provisions effective January 1, 1995, the effective date of the amendments made to the Tariff Act by the Uruguay Round Agreements Act. In addition, unless otherwise indicated, all citations to the Department's regulations are to the current regulations, as amended by the interim regulations published in the **Federal Register** on May 11, 1995 (60 FR 25130).

Scope of the Review

Imports covered by this review are shipments of BSS, other than leaded and tin BSS. The chemical composition of the covered products is currently defined in the Copper Development Association's (C.D.A.) 200 series or the Unified Numbering System (U.N.S.) C2000. Products whose chemical composition is defined by other C.D.A. or U.N.S. series are not covered by this order.

The physical dimensions of the products covered by this review are BSS of solid rectangular cross section over 0.006 inches (0.15 millimeters) through 0.188 inches (4.8 millimeters) in finished thickness or gauge, regardless of width. Coil, wound-on-reels (traverse wound), and cut-to-length products are included. These products are currently classifiable under Harmonized Tariff Schedule (HTS) subheadings 7409.21.00 and 7409.29.00. Although the HTS subheadings are provided for convenience and for Customs Service (Customs) purposes, the written description of the scope of this order remains dispositive.

Pursuant to the final affirmative determination of circumvention of the antidumping duty order, we determined that brass plate used in the production of BSS falls within the scope of the antidumping duty order on BSS from Canada. See Brass Sheet and Strip from Canada: Final Affirmative Determination of Circumvention of Antidumping Duty Order, 58 FR 33610 (June 18, 1993).

The review covers one manufacturer/exporter, Wolverine, and the period January 1, 1995 through December 31, 1995.

Analysis of Comments Received

On January 6, 1997, we received a case brief from the petitioners, Hussey Copper, Ltd., the Miller Company, Olin Corporation—Brass Group, Outokumpu American Brass, Revere Copper Products, Inc., International Association of Machinists and Aerospace Workers, International Union, Allied Industrial Workers of America (AFL–CIO), Mechanics Educational Society of America (Local 56), and the United Steelworkers of America (AFL–CIO/CLC). We received a rebuttal brief from the respondent, Wolverine, on January 13, 1997.

Comment 1: The petitioners challenge Wolverine's assertion that it sold its merchandise at three distinct levels of trade in its home market during the period of review (POR). According to the petitioners, the fact that Wolverine only provided information on selling (supporting) functions to two customer groups reflects the lack of evidence to distinguish general jobber distributors from processing distributors. The petitioners also contend that Wolverine failed to provide evidence to substantiate its assertion that sufficiently dissimilar selling functions were performed by the two remaining customer categories, distributors vs. OEMs. The petitioners maintain that Wolverine's own data show that OEMs and distributors purchased comparable quantities of reroll and non-reroll materials. Thus, according to the petitioners, there is no distinction in the level of trade based on the types of products purchased by Wolverine's customers.

In response to Wolverine's claim that OEM customers purchase cut-to-length material which requires a distinct packaging from coils because of its rectangular shape, the petitioners argue that the type of packing used is based on the form of the material, not the customer category. In addition, the petitioners point out that although Wolverine packs the subject merchandise for the U.S. and home market in four forms, it reported one packing cost by dividing total packing costs by the number of pounds shipped. The petitioners conclude that if Wolverine did not make a distinction among the forms when it reported its per-unit packing costs, the Department should not use differences in packing as the basis for distinguishing levels of trade.

The petitioners maintain that the information submitted by Wolverine does not show that it provided different technical services and product support for different level of customers. In fact, the petitioners point out that Wolverine, in its initial response to the Department's questionnaire, stated that it incurred no technical service expenses on its sales of the subject merchandise. Wolverine's assertion, in its supplemental questionnaire response, that it provides a higher level of product support to its OEM customers is not supported by evidence on the record in the petitioners' view. They point out that Wolverine's home market sales listing shows that both customer categories purchase products with identical physical characteristics and that the quantities purchased by Wolverine's OEM customers were comparable to, and sometimes greater than, those purchased by distributors.

As for Wolverine's contention that as one of the two remaining producers of brass sheet and strip in Canada, it is an established custom producer with an established client base, petitioners state that logically these established customers should not require technical/product support from Wolverine.

The petitioners state that Wolverine's claim that it provided a significantly

greater level of freight and delivery services to its OEM customers than to its distributor customers is not supported by Wolverine's reported inland freight expenses, which did not reflect a cost difference based on the customer category. In petitioners' view, the selection of different terms of delivery by the two customer categories is meaningless. Moreover, the fact that Wolverine is reimbursed by the customer for one shipment method and not another is irrelevant because, according to petitioners, Wolverine would simply pass on its freight expense in the form of higher prices.

Contrary to Wolverine's contention that it devotes more administrative resources (i.e., for traffic, sales, and accounting work) to its OEM customers, the petitioners assert that this is due to the volume of sales to that group and not the customized nature of the products sold to OEMs.

In response to Wolverine's argument that during the POR all of its return/credits were to OEM customers, the petitioners contend that Wolverine would follow the same return policy with distributors, and, therefore Wolverine's warranty policy is the same regardless of the customer category.

The petitioners state that Wolverine failed to differentiate the selling function it performed for its OEM and distributor customers, providing identical or similar services to its alleged two customer levels. The petitioners state that in Dynamic Random Access Memory Semiconductors of One Megabit or Above from the Republic of Korea: Preliminary Results of Antidumping Administrative Review, 61 FR 36029, 36031, 36032 (July 9, 1996) the Department identified one level of trade in the respondent's home market because the respondents' direct sales to its home market customers, whether made to OEMs or to distributors, included the same functions. Therefore, the petitioners conclude, the Department must deny Wolverine's claimed level-of-trade adjustment.

Wolverine counters that in its response to the Department's supplemental questionnaire, it provided substantial and detailed information that distinguished between sales made to customers in two distinct levels of trade, (i.e., original equipment manufacturers (OEMs) and distributors). The petitioners' arguments, according to Wolverine, are based exclusively on their own ''analysis'' of the Wolverine's submitted data, and rely on no other information in the record.

Wolverine states that the example cited by the petitioners to support their contention that both OEMs and distributors buy products made from non-reroll and reroll material, and thus, customer category is irrelevant, is consistent with its position that the OEM customer tends to purchase more re-rolled product compared to the distributor customer. Wolverine maintains that it is *not* contending that one customer group never purchases products from non-reroll material and the other customer group never purchases products made from reroll material, and vice versa. According to Wolverine, it has simply stated that when customers purchase heavy gauge material, the OEM customer is likely to require a more customized product, while the less demanding technical requirements of the distributor will typically allow the product to be produced from non-reroll material.

Wolverine contends that the petitioners have missed the point regarding the distinctions in packing and freight between the two customer groups. With respect to packing, Wolverine states that the Department allows packing adjustments only for costs directly attributable to the packing operation (i.e., materials, labor, and related overhead). According to Wolverine, the packing adjustment does not take into account other indirect expenses (e.g., the need to maintain inventories of different packing materials, to establish packing codes for different packing types, to track product packed differently through the production process, to institute different quality control and inspection standards, etc.). Wolverine concludes that the fact that having to manufacture and sell product in both cut-to-length and coil form requires Wolverine to provide other services to its customers in addition to those accounted for in the Department's packing cost adjustment.

Similarly, Wolverine contends that petitioners' conjecture that Wolverine is reimbursed for the freight costs that it incurs on sales that are sold on pre-paid and delivered terms is irrelevant because ''[T]he process of establishing whether separate levels of trade exist is distinct from both the margin calculation and the level of trade adjustment (see, Certain Pasta from Italy, Final Determination of Sales at Less-Than-Fair-Value, 61 FR 30326, 30338 June 6, 1996)(Pasta)).

Wolverine rejects the petitioners' argument that Wolverine's failure to request a circumstance-of-sale (COS) adjustment for differences in technical service expenses between the U.S. and home markets is evidence that the additional product support that Wolverine provides its OEM customers is irrelevant to the Department's level of trade analysis. Wolverine claims this is inconsistent with the requirements of the statute and the Department's policy. Wolverine states that in conducting its LOT analysis, the Department considers the specific types of sales functions and services that the producer provides to its customers and is not concerned with whether the particular service or function in question is sufficiently well-defined to rise to the level of a COS adjustment. According to Wolverine, the Department generally considers travel expenses and contract services as an example of a technical service eligible for a COS adjustment and the fact that it did not claim such expenses does not compromise the Department's ability to consider the higher level of product support that Wolverine provides to its OEM customers.

In regard to warranty expenses, Wolverine points out that the petitioners do not dispute the fact that all of Wolverine's home market warranty expenses were incurred on sales to OEM customers. In addition, Wolverine states that petitioners claim that Wolverine would incur the same warranty expenses with respect to distributors is pure speculation on their part.

Wolverine concludes that the petitioners have failed to identify any legitimate points that undermine the integrity of the Department's level-of-trade analysis and urges the Department to conduct the same analysis made in the Preliminary Results of this review.

Department's Position: We agree with the petitioners. Section 773(a)(7)(A) of the Act directs the Department to make an adjustment for differences in level of trade only if the following two conditions are met: (1) there is a difference in the levels of trade, involving the performance of different selling activities, and (2) the difference in level of trade affects price comparability, as demonstrated by a pattern of consistent price differences between the sales at the different levels of trade in the market in which normal value is determined.

In order to determine whether sales in the comparison market are at a different level of trade than the export price or CEP, we examine whether the comparison sales were at different stages in the marketing process than the export price or CEP. We make this determination on the basis of a review of the distribution system in the comparison market, including selling functions, class of customer, and the level of selling expenses for each type of sale. Different stages of marketing necessarily involve differences in

selling functions, but differences in selling functions, even substantial ones, are not alone sufficient to establish a difference in the level of trade. Similarly, while customer categories such as ''distributor'' and ''wholesaler'' may be useful in identifying different levels of trade, they are insufficient in themselves to establish that there is a difference in the level of trade. See Certain Corrosion-Resistant Carbon Steel Flat Products and Certain Cut-to-Length Carbon Steel Plate from Canada; Preliminary Results of Antidumping Duty Administrative Review, 61 FR 51891, 51896 (October 4, 1996); Antifriction Bearings (Other Than Tapered Roller Bearings) and Parts Thereof from France, et al., Final Results of Antidumping Duty Administrative Reviews, 62 FR 2081, 2105 (January 15, 1997) (AFBs VI).

While neither the statute nor the Statement of Administrative Action (SAA) defines level of trade, the structure of the relevant provision in the statute (section 773(a)(7)(A)) uses the term ''level of trade'' as a concept distinct from selling activities. Specifically, this sub-section allows for a level-of-trade adjustment where there is a difference in levels of trade and that difference ''involves'' the performance of different selling activities. The SAA (at 829) also ascribes a meaning to level of trade that suggests that an analysis of selling activities alone is insufficient to establish the level of trade by stating that two sales with some common selling activities could be at different levels of trade, See, e.g., AFBs VI, at 2107.

Although the customer type is an important indicator in identifying differences in levels of trade, the existence of different classes of customers is not sufficient to establish a difference in the levels of trade. Accordingly, we consider the class of customer as one factor, along with selling functions and the selling expenses associated with these functions, in determining the stage of marketing, *i.e.*, the level of trade associated with the sales in question, Id.

Although Wolverine has documented differences in costs between the selling activities performed for OEM customers and distributor customers, it has not made the requisite showing that there is a difference in the selling functions provided on sales to OEMs and sales to distributors. While Wolverine sells to different classes of customers, nothing on the record indicates that its sales are made at different marketing stages, as evidenced by an additional layer of selling activities provided to one customer category as opposed to the other. For example, Wolverine argues that the packing for OEM merchandise is more expensive than the packing needed for the merchandise sold to distributors. Since both OEM and distributors bought cut-to-length material and coils, the distinct packaging characteristics of each product do not distinguish Wolverine's OEM customers from its distributor customers. In addition, Wolverine reported only one per-unit packing cost for its four forms of packaging, implying that there was no significant difference between the packaging provided to the two different classes of customers.

Wolverine's statement in its original response to the Department's questionnaire that it incurred no technical service expenses on its sales of the subject merchandise does not support its claim of two different levels of trade based on the greater product support it offered to its OEM customers as opposed to that provided to its distributor customers. Furthermore, the fact that all three terms of payment (i.e., pre-paid and delivered, pre-paid and charged, collect) were not only available but used by both distributors and OEMs, does not support Wolverine's claim of two distinct levels of trade based on the terms each class of customer selects. Wolverine has also failed to claim any specific differences between the warranty policy offered to its OEM customers and that offered to its distributor customers.

Wolverine states that due to the customized nature of the products demanded by OEMs, it expends a greater proportion of the company's administrative resources (i.e., for traffic, sales, and accounting work) on OEM sales than it does for distributor sales. First, the relative time spent on servicing one customer type as opposed to another is not necessarily a basis for determining that there are different levels of trade, especially since Wolverine has not quantified these differences on a level-of-trade basis. Secondly, Wolverine's statement that it produces all brass sheet and strip material to order appears to contradict its implication that only the OEM merchandise is customized (see Supplemental Questionnaire Response, October 24, 1996, p. 8).

We note that Wolverine has demonstrated that there are some differences in the selling functions it performs for its OEM customers and those it performs for its distributor customers. However, the fact that there are two different classes of customers and that one class may sometimes require a greater degree of administrative resources or technical and product support, or more costly packing requirements and freight expenses on Wolverine's part, is not in itself sufficient to determine that there are different levels of trade. None of these services involve an additional layer of selling activity performed by Wolverine for sales of the subject merchandise to an OEM customer as opposed to a distributor customer. For example, if one class of customer required packaging for its merchandise and the other class required none, this may suggest that there is an additional layer of activity involved. As a further example, if Wolverine's OEM customer required technical training support, while its distributor customer provided its own technical training, this could also serve as support for an argument that the sale of the subject merchandise would occur at different marketing stages for the two classes of customers. Wolverine, however, has not established any such clear, quantifiable distinctions between its claimed levels of trade. Since it has not been established that different levels of trade exist, there is no need to determine whether there is a quantifiable price difference between levels of trade that would warrant an adjustment. Therefore, for these final results the Department has used home market sales to both OEMs and distributors for comparison purposes. This represents a change from our Preliminary Results.

Comment 2: The petitioners urge the Department not to use Wolverine's entire product control numbers to match Wolverine's U.S. and home market sales because Wolverine's product control numbering system includes an element in the third position that does not reflect the physical characteristics of the finished brass sheet and strip. Specifically, in petitioners' view, the alloy code in Wolverine's product coding system is *not* based exclusively on the physical characteristics (i.e., the chemical composition) of the finished brass sheet and strip, but is partially based on the source of the input materials that were used to produce the subject merchandise.

The petitioners question Wolverine's contention that the brass reroll stock it claims it purchases from unrelated suppliers in order to meet the requirements of low impurities and heavy gauges for certain applications undergoes a very high reduction which, in turn, imparts a uniform fine grain to the finished product. The petitioners cite an industry expert (see October 7, 1996 Letter from Copper & Brass Fabricators Council, Inc. to the Secretary of Commerce) who states that the distinction between non-reroll and

reroll material and the attendant claim of differing purity levels is incorrect and that regardless of whether brass sheet and strip is produced from non-reroll or reroll material, the product is identical in alloy, sold in the same markets, and consumed in the same end uses. The petitioners maintain that the industry expert's opinion is supported by Wolverine's reported sales data which shows that during the POR the same customers purchased brass sheet and strip from both reroll and non-reroll materials for their end uses. The petitioners state that even if Wolverine's claim that certain of its customers require brass sheet and strip of a finer grain size is true, this has no bearing on whether the finished product was produced from reroll or non-reroll materials because the same customers purchased brass sheet and strip made from reroll input materials and non-reroll input materials. Moreover, the petitioners assert that the grain sizes of finished brass sheet and strip depends on the rolling and annealing process used to produce the product, rather than the source of the raw materials. According to the petitioners, a reroll vs. non-reroll designation is redundant and does not serve to distinguish the physical characteristics of the finished brass sheet and strip and, therefore, must not be used as a criterion for matching purposes.

The petitioners note that Section 771(16)(A) of the Tariff Act of 1930, amended, defines the term ''foreign like product'' as ''the subject merchandise and other merchandise which is identical in *physical characteristics* with, and was produced in the same country by the same person as that merchandise.'' (emphasis added). The petitioners point out that the Department has conducted nine investigations of brass sheet and strip products from nine countries and has never considered the differentiation between reroll and non-reroll inputs in product matching. According to the petitioners, producers' selection of scrap materials and virgin materials for the production of brass sheet and strip depends largely on the availability and the cost of each raw material rather than physical property of the finished products.

The petitioners conclude that the Department, for this administrative review, must follow its stated practice of matching Wolverine's U.S. sales to foreign like products based on the physical characteristics of the finished brass sheet and strip, and thus, disregard the third position of Wolverine's reported product control numbers.

The respondent argues that the Department properly included all reported physical characteristics, including grain size, in its product comparisons. Respondent states that the petitioners themselves acknowledge that grain size is a relevant commercial factor for brass consumers, but appear to limit the Department's ability to account for grain size to the criteria contained in ASTM specifications. According to the respondent, nothing in the U.S. antidumping law or the Department's own regulations or precedents restricts the Department from using factors in addition to those specified by ASTM in determining appropriate product comparison criteria. The respondent maintains that it has repeatedly demonstrated to the Department's satisfaction that grain size differences are relevant to customers that require smooth polished surfaces in their finished products and that it can achieve this required quality product only with re-roll material. The respondent concludes, therefore, that Wolverine's product codes and control numbers which differentiate reroll and non-reroll material do properly reflect all relevant product characteristics.

The respondent terms the petitioners' argument that the same customers purchase brass sheet and strip made from both re-roll and non-reroll input materials irrelevant, stating that the same customers, at any given time, may require both reroll and non-reroll inputs, depending upon the desired grain quality required. Wolverine urges the Department to continue to use, in its final results, the same analysis with respect to re-roll products as was applied in the preliminary results.

Department's Position: Upon further study of the product code designations and the comments submitted by the interested parties, we do not feel that Wolverine has adequately made its case for the necessity or appropriateness of introducing an additional element in its product coding system which distinguishes reroll from non-reroll raw material input. In this instance, the reroll vs. non-reroll designation of the raw material input does not describe a physical difference in the finished product per se. This is a change from the preliminary results.

The Department does not normally consider the source of a given input material as a model match characteristic. For example, if two different plants supply a particular feedstock used in the production of a particular product, it is our longstanding practice to consider both feedstock materials to be identical, regardless of the difference in production costs. Similarly, we do not distinguish between two input materials if one feedstock is purchased and the other is produced internally. Thus, as a general matter, it would be inconsistent with the Department's practice to segregate reroll from non-reroll material on this basis alone.

Respondent appears to be trying to use the distinction between reroll and non-reroll material as a proxy for differences in grain size or purity of the finished product. While we agree that grain size or purity could potentially be a relevant commercial factor for brass sheet and strip consumers, respondent did not report information on either of these physical characteristics. Respondent provided no quantitative or statistical data describing differences in grain size or purity between various brass products, how these differences relate to customer requirements, or how these differences relate to the source of the raw material input (i.e., reroll vs. non-reroll).

Finally, Wolverine fails to distinguish, in any quantifiable way, how the reroll vs. non-reroll code designates a physical characteristic different from those codes assigned for temper and gauge.

Final Results of Review

As a result of our review, we have determined that no margin exists for Wolverine during the period 1/1/95 through 12/31/95. The Department will issue appraisement instructions directly to the Customs Service.

Manufacturer/Exporter	Period of review	Margin
Wolverine Tube (Canada), Inc.	01/01/95–12/31/95	0.22

Furthermore, the following deposit requirements will be effective upon publication of this notice of final results of review for all shipments of brass sheet and strip from Canada within the scope of the order entered, or withdrawn from warehouse, for consumption on or after the publication date, as provided by section 751(a)(1) of

the Tariff Act: (1) The cash deposit rate for the reviewed company will be zero; (2) for previously reviewed or investigated companies not listed above, the rate will continue to be the company-specific rate published for the most recent period; (3) if the exporter is not a firm covered in this review, a prior review, or the original less-than-fair-value (LTFV) investigation, but the manufacturer is, the cash deposit rate will be the rate established for the most recent period for the manufacturer of the merchandise; and (4) for all other producers and/or exporters of this merchandise, the cash deposit rate of 8.10 percent, the ''all others'' rate established in the LTFV investigation. These deposit requirements, when imposed, shall remain in effect until publication of the final results of the next administrative review.

This notice serves as a final reminder to importers of their responsibility under 19 CFR § 353.26 to file a certificate regarding the reimbursement of antidumping duties prior to liquidation of the relevant entries during this review period. Failure to comply with this requirement could result in the Secretary's presumption that reimbursement of antidumping duties occurred and subsequent assessment of double antidumping duties.

Notification of Interested Parties

This notice also serves as a reminder to parties subject to administrative protective order (APO) of their responsibility concerning the disposition of proprietary information disclosed under APO in accordance with 19 CFR § 353.34(d). Timely written notification of return/destruction of APO materials or conversion to judicial protective order is hereby requested. Failure to comply with the regulations and the terms of an APO is a sanctionable violation. Timely written notification of the return/destruction of APO materials or conversion to judicial protective order is hereby requested. This administrative review and notice are in accordance with Section 751(a)(1) of the Tariff Act (19 U.S.C. 1675(a)(1)) and 19 CFR 353.22.

Dated: April 1, 1997.

Robert S. LaRussa,

Acting Assistant Secretary for Import Administration.

[FR Doc. 97–8953 Filed 4–7–97; 8:45 am]

BILLING CODE 3510–DS–M

DEPARTMENT OF COMMERCE

International Trade Administration

[A–351–820]

Notice of Preliminary Results of Antidumping Duty Administrative Review: Ferrosilicon From Brazil

AGENCY: Import Administration, International Trade Administration, Department of Commerce.

EFFECTIVE DATE: April 8, 1997.

FOR FURTHER INFORMATION CONTACT: Jennifer Katt or Sal Tauhidi, AD/CVD Enforcement Group II, Office Four, Import Administration, International Trade Administration, U.S. Department of Commerce, 14th Street and Constitution Avenue, N.W., Washington, D.C. 20230; telephone: (202) 482–0498 or (202) 482–4851, respectively.

The Applicable Statute

Unless otherwise indicated, all citations to the Tariff Act of 1930, as amended (the Act) are references to the provisions effective January 1, 1995, the effective date of the amendments to the Act by the Uruguay Round Agreements Act (URAA).

Preliminary Results

We preliminarily determine that sales of ferrosilicon from Brazil have been made below normal value (NV). If these preliminary results are adopted in our final results of administrative review, we will instruct U.S. Customs to assess antidumping duties on all appropriate entries.

Case History

On March 4, 1996 (61 FR 8238), the Department of Commerce (the Department) published in the **Federal Register** a notice of ''Opportunity to Request an Administrative Review'' of the antidumping duty order on Ferrosilicon from Brazil covering the period March 1, 1995, through February 29, 1996. In accordance with 19 CFR 353.22(a)(2), in March 1996, Companhia Brasileira Carbureto De Calcio (CBCC) and Companhia Ferroligas Minas Gerais (Minasligas) (collectively the respondents) requested that the Department conduct an administrative review of their shipments of ferrosilicon to the United States during this period. On April 25, 1996, the Department published a notice of initiation of administrative review (61 FR 18379). The Department is now conducting this administrative review in accordance with section 751 of the Act.

On May 8, 1996, the Department issued an antidumping duty questionnaire to CBCC and Minasligas. This questionnaire instructed the respondents to respond to sections A (corporate structure, accounting practices, markets and merchandise), B (home market sales), C (United States sales) and D (cost of production/constructed value) of the questionnaire. CBCC and Minasligas submitted questionnaire responses in July 1996. The Department issued supplemental questionnaires to CBCC and Minasligas in September 1996, December 1996, and January 1997. Responses to the supplemental questionnaires were received in October 1996, and January 1997.

Under section 751(a)(3)(A) of the Act, the Department may extend the deadline for completion of a preliminary determination if it determines that it is not practicable to complete the review within the statutory time limit. On November 26, 1996, the Department extended the time limit for the preliminary results in this case. See Extension of Time Limits of Antidumping Duty Administrative Review, (61 FR 64322) (December 4, 1996).

In accordance with section 782(i) of the Act, we verified the sales and cost questionnaire responses of CBCC and Minasligas during February 1997. The results of these verifications are outlined in the public versions of the verification reports dated March 19, 1997, on file in room B–099 of the main Commerce building.

Scope of Review

The merchandise subject to this review is ferrosilicon, a ferroalloy generally containing, by weight, not less than four percent iron, more than eight percent but not more than 96 percent silicon, not more than 10 percent chromium, not more than 30 percent manganese, not more than three percent phosphorous, less than 2.75 percent magnesium, and not more than 10 percent calcium or any other element. Ferrosilicon is a ferroalloy produced by combining silicon and iron through smelting in a submerged-arc furnace. Ferrosilicon is used primarily as an alloying agent in the production of steel and cast iron. It is also used in the steel industry as a deoxidizer and a reducing agent, and by cast iron producers as an inoculant.

Ferrosilicon is differentiated by size and by grade. The sizes express the maximum and minimum dimensions of the lumps of ferrosilicon found in a given shipment. Ferrosilicon grades are defined by the percentages by weight of contained silicon and other minor elements. Ferrosilicon is most

commonly sold to the iron and steel industries in standard grades of 75 percent and 50 percent ferrosilicon. Calcium silicon, ferrocalcium silicon, and magnesium ferrosilicon are specifically excluded from the scope of this review. Calcium silicon is an alloy containing, by weight, not more than five percent iron, 60 to 65 percent silicon, and 28 to 32 percent calcium. Ferrocalcium silicon is a ferroalloy containing, by weight, not less than four percent iron, 60 to 65 percent silicon, and more than 10 percent calcium. Magnesium ferrosilicon is a ferroalloy containing, by weight, not less than four percent iron, not more than 55 percent silicon, and not less than 2.75 percent magnesium. Ferrosilicon is currently classifiable under the following subheadings of the Harmonized Tariff Schedule of the United States (HTSUS): 7202.21.1000, 7202.21.5000, 7202.21.7500, 7202.21.9000, 7202.29.0010, and 7202.29.0050. Although the HTSUS subheadings are provided for convenience and customs purposes, our written description of the scope of this review is dispositive.

Ferrosilicon in the form of slag is included within the scope of this order if it meets, in general, the chemical content definition stated above and is capable of being used as ferrosilicon. Parties that believe their importations of ferrosilicon slag do not meet these definitions should contact the Department and request a scope determination.

Period of Review

The period of review (POR) is March 1, 1995, through February 29, 1996.

Product Comparisons

In accordance with section 771(16) of the Act, we considered all products produced by CBCC and Minasligas, covered by the description in the ''Scope of the Review'' section, above, and sold in the home market during the POR, to be foreign like products for purposes of determining appropriate product comparisons to U.S. sales. Where there were no sales of identical merchandise in the home market to compare to U.S. sales, we compared U.S. sales to the next most similar foreign like product based on the following criteria: (1) The grade of ferrosilicon (*i.e.*, standard, high purity and low aluminum); (2) the percentage range, by weight, of silicon content; and (3) the sieve size.

Although we have used the sieve size category as a matching criterion in past reviews, we are reconsidering the matching criteria for CBCC and Minasligas in light of additional data on the record in this review. Although cost differences among sieve size categories do not exist, we considered whether the merchandise was a ''lump'' or a ''fine'' in making our product comparisons because sales of ferrosilicon fines command significantly lower market prices than sales of ferrosilicon lumps. In addition, it appears that the two products have different end-uses. For purposes of these preliminary results, we considered ferrosilicon pieces with a minimum dimension equal to or greater than one millimeter to be lumps and ferrosilicon pieces with a maximum dimension less than one millimeter to be fines. We did not consider any difference in sieve size ranges within the lump or fine categories in determining the most appropriate product comparison because significant price differences within the lump or fine sieve size category did not exist. Interested parties are requested to comment on these matching criteria in the case briefs submitted in this review.

For those sales where CBCC did not report the actual silicon weight content because the chemical analysis certification documentation had been destroyed, we assumed that the silicon content was 75 percent because it was confirmed at verification that this merchandise was marketed and sold to the U.S. customer as ''75 percent ferrosilicon.''

CBCC and Minasligas reported only one cost of manufacturing (COM) for all three grades of ferrosilicon produced and sold during the POR. Both companies stated that in the normal course of business, their books and records do not capture any cost differences for producing different grades of ferrosilicon. However, at verification, Minasligas was able to identify some cost differences associated with the production of high purity and low aluminum ferrosilicon. Where Minasligas' U.S. sales of high purity or low aluminum ferrosilicon were matched to home market sales of standard grade ferrosilicon, we calculated a difference in merchandise (DIFMER) adjustment between the products as follows: (1) We isolated the additional material, labor and variable overhead costs used in the production of high purity and low aluminum ferrosilicon; (2) we removed these costs from the variable cost of manufacturing (VCOM) reported for standard grade ferrosilicon; and (3) we added these costs to the VCOM reported for high purity and low aluminum ferrosilicon. The DIFMER was then calculated, where appropriate, to be the difference in the variable cost of manufacturing between the product sold to the U.S. and the product sold in the home market. (For a further discussion of the calculation of the DIFMER, see the ''Concurrence Memorandum'' dated April 1, 1997, on file in room B–099 of the main Commerce building.)

Level of Trade

As set forth in section 773(a)(1)(B)(i) of the Act and in the Statement of Administrative Action (SAA) accompanying the URAA, H.R. Doc. No. 316, 103d Cong., 2d Sess at 870. (1994) (SAA), at 829–831, to the extent practicable, the Department will calculate NV based on sales at the same level of trade as the U.S. sale. When the Department is unable to find sale(s) in the comparison market at the same level of trade as the U.S. sale, the Department may compare sales in the U.S. to foreign market sales at a different level of trade. See Final Determination of Sales at Less than Fair Value; Certain Pasta from Italy, 61 FR 30326 (June 14, 1996).

In order to determine whether there is a difference in level of trade, the Department must find that two sales have been made at different stages of marketing, or the equivalent. Different stages of marketing necessarily involve differences in selling functions, but differences in selling functions (even substantial ones) are not alone sufficient to establish a difference in the level of trade. Similarly, seller and customer descriptions (such as ''distributor'' and ''wholesaler'') are useful in identifying different levels of trade, but are insufficient to establish that there is a difference in the level of trade. See Porcelain-on-Steel Cookware from Mexico: Preliminary Results of Antidumping Duty Administrative Review (61 FR 36551 (January 31, 1997)).

In implementing these principles in this review, we examined information regarding the selling activities of the producers/exporters associated with each stage of marketing, or the equivalent. In reviewing the selling functions reported by the respondents, we considered all types of selling activities, both claimed and unclaimed, that had been performed. In analyzing whether separate LOTs existed, we found that no single selling activity was sufficient to warrant a separate LOT (see Notice of Proposed Rulemaking and Request for Public Comments, 61 FR 7307, 7348 (February 27, 1996)). Pursuant to section 773(a)(7)(B)(i) of the Act and the SAA at 827, in identifying levels of trade for EP and home market sales, we considered the selling functions reflected in the starting price of these transactions before any adjustments.

In addition, we examined any claimed LOTs reported by each respondent in response to our initial and supplemental questionnaires. When examining claimed LOTs, we analyzed the selling activities associated with the classes of customers and marketing stages the respondents reported. In applying this analysis, we expect that, if claimed LOTs are the same, the functions and activities of the seller should be similar. Conversely, if a party claims that LOTs are different for different groups of sales, the functions and activities of the seller should be dissimilar. The Department not only examines the types of selling activities, but weighs the overall function performed for each claimed level of trade.

In accordance with section 773(a)(7)(A) of the Act, in comparing U.S. sales to NV sales, the Department will adjust the NV to account for any difference in level of trade if two conditions are met. First, the sales must in fact be made at different levels of trade, which can exist only if there are differences between the actual selling functions performed by the seller at the level of trade of the U.S. sale and the level of trade of the NV sale. Second, there must be a difference in price comparability, as evidenced by a pattern of consistent price differences between sales at the different levels of trade in the market in which NV is determined.

Based on our analysis of the selling functions performed by each respondent, we found that a single level of trade exists in each market. We then compared selling functions in the U.S. market and in the home market and found them to be similar. We find, therefore, that sales in the home market and in the U.S. market are at the same level of trade.

Fair Value Comparisons

To determine whether sales of ferrosilicon by CBCC and Minasligas to the United States were made at less than fair value, we compared the export price (EP) to the normal value (NV), as described in the ''Export Price'' and ''Normal Value'' sections of this notice. In accordance with section 777A(d)(2) of the Act, we compared the EP of individual transactions to the weighted-average NV of contemporaneous sales of the foreign like product.

Export Price

For CBCC and Minasligas, we calculated EP, in accordance with subsections 772 (a) and (c) of the Act because the subject merchandise was sold directly to the first unaffiliated purchaser in the United States prior to importation and constructed export price was not otherwise warranted based on the facts of record.

For both respondents, we calculated EP based on packed prices to the first unaffiliated customers in the United States. In accordance with section 772(c)(2)(A) of the Act, we made deductions, where appropriate, for freight expenses between the plant and the port, foreign brokerage and handling, warehousing expenses, ocean freight, and marine insurance expenses.

The questionnaire instructs respondents to report all costs, charges or expenses incurred in bringing the subject merchandise from the original place of shipment in the exporting country to the unaffiliated customer's place of delivery. At verification we discovered that Minasligas had not reported marine insurance expenses incurred on U.S. sales made on a CIFFO basis, and that CBCC had not reported the chemical analysis and weight inspection fees incurred on U.S. sales. Section 776(a)(2) of the Act provides that if an interested party withholds information that has been requested by the Department, fails to provide such information in a timely manner or in the form or manner requested, significantly impedes a determination under the antidumping statute, or provides information which cannot be verified, the Department shall use facts available in reaching the applicable determination. Because CBCC and Minasligas failed to provide the data requested by the Department regarding marine insurance expenses and chemical analysis and weight inspection fees prior to verification, the Department is compelled to use facts available with regard to these expenses.

Section 776(b) of the Act provides that adverse inferences may be used if the party has failed to cooperate by not acting to the best of its ability to comply with requests for information. See also the Statement of Administrative Action (SAA) at 870. Because CBCC and Minasligas failed to report marine insurance expenses and chemical analysis and weight inspection fees, despite the Department's request for such data, and because the respondents provided no explanation for the lack of data, each company has failed, to date, to cooperate to the best of its ability with respect to these expenses. Thus, the Department has determined that, in selecting among the facts otherwise available to apply to these unreported U.S. expenses, an adverse inference is warranted. Consequently, as facts otherwise available, we have assigned the highest marine insurance expense incurred on a U.S. sale during the POR to all of Minasligas' U.S. sales made on a CIFFO basis and the highest chemical analysis and weight inspection fees incurred on a U.S. sale to all of CBCC's U.S. sales.

We made additional company specific adjustments as follows:

Minasligas

We calculated Minasligas' EP based on FOB Brazilian port and CIFFO prices. We added the amount of marine insurance revenue which was collected by Minasligas with regard to one U.S. sale during the POR. We disallowed Minasligas' claim for duty drawback for mineral coal because it was determined at verification that import duties on mineral coal were suspended upon importation. Therefore, Minasligas does not receive any duty drawback when ferrosilicon is exported. Finally, we corrected the reported date of sale for two transactions to reflect the actual date of sale confirmed at verification.

CBCC

We calculated CBCC's EP based on FOB Brazilian port prices. We disallowed CBCC's claim for interest revenue as an offset to the reported credit expenses and instead used the actual bank charges incurred on each U.S. sale as the cost of extending credit to the U.S. customer. (For a further discussion of this issue, see the ''Normal Value'' section of this notice, below.)

Normal Value

In order to determine whether there was a sufficient volume of sales in the home market to serve as a viable basis for calculating NV, we compared each respondent's volume of home market sales of foreign like product to the volume of U.S. sales of the subject merchandise in accordance with section 773(a)(1)(C) of the Act. Since the aggregate volume of home market sales of the foreign like product was greater than five percent of the aggregate volume of U.S. sales of the subject merchandise, and there was no evidence indicating that a particular market situation in the exporting country did not permit a proper comparison, we determined that the home market was viable for CBCC and Minasligas. Therefore, in accordance with section 773(a)(1)(B)(i) of the Act, we based NV on the prices at which the foreign like products were first sold for consumption in the exporting country. We calculated NV as noted in the ''Price to Price Comparisons'' and ''Price to Constructed Value'' sections of this notice, below.

Cost of Production Analysis

Because we disregarded sales below the cost of production (COP) in the last completed segment of the proceeding for CBCC and Minasligas (*i.e.*, the LTFV investigation) we had reasonable grounds to believe or suspect that sales

of the foreign product under consideration for the determination of NV in this review may have been made at prices below the COP, as provided by section 773(b)(2)(A)(ii) of the Act. Therefore, pursuant to section 773(b)(1) of the Act, we initiated COP investigations of sales by CBCC and Minasligas in the home market. (See the Memorandum to the File from Laurel LaCivita, dated May 3, 1996, on file in room B–099 of the main Commerce building.)

Before making any fair value comparisons, we conducted the COP analysis described below for CBCC and Minasligas.

A. Calculation of COP

In accordance with section 773(b)(3) of the Act, we calculated the COP based on the sum of each respondent's cost of materials and fabrication employed in producing the foreign like product, plus amounts for selling, general and administrative expenses (SG&A) and packing costs. We relied on the COP amounts reported by CBCC and Minasligas except in the following specific instances where the reported costs were determined to be improperly valued:

CBCC

1. We reallocated the reported labor and overhead expenses for July, 1995, through February 1996, based on the actual production capacity.
2. We recalculated the cost of charcoal for all charcoal consumed in the production process using the purchased unit cost obtained at verification.
3. We recalculated the reported factory overhead for January 1996, to include depreciation expenses on idle assets.

Minasligas

1. We reallocated the reported variable overhead cost based on the actual production tonnage rather than the number of furnaces used.
2. We recalculated the reported weighted-average cost used to average monthly COP costs to correct an error discovered at verification.
3. We adjusted the reported G&A expense to deduct reforestation maintenance costs which had been reported twice in the COP/CV response.
4. We disallowed Minasligas' claim for negative interest expenses and instead, set the interest expense equal to zero.

B. Test of Home Market Prices

We compared the adjusted weighted-average COP for each respondent to home market sales of the foreign like product as required under section 773(b) of the Act, in order to determine whether these sales had been made at prices below the COP within an extended period of time in substantial quantities, and whether such prices were sufficient to permit the recovery of all costs within a reasonable period of time. On a product-specific basis, we compared the COP to the reported home market prices less any applicable movement charges, taxes, rebates, commissions and other direct and indirect selling expenses.

C. Results of the COP Test

Pursuant to section 773(b)(2)(C), where less than 20 percent of a respondent's sales of a given product were at prices less than the COP, we did not disregard any below-cost sales of that product because we determined that the below-cost sales were not made in ''substantial quantities.'' Where 20 percent or more of a respondent's sales of a given product were at prices less than the COP, we disregarded the below-cost sales because such sales were found to be made within an extended period of time in ''substantial quantities'' in accordance with sections 773(b)(2) (B) and (C) of the Act, and based on comparisons of price to weighted-average COPs for the POR we determined that the below-cost sales of the product were at prices which would not permit recovery of all costs within a reasonable period of time, in accordance with section 773(b)(2)(D) of the Act. Where all contemporaneous sales of a specific product were at prices below the COP, we calculated NV based on CV, in accordance with section 773(a)(4) of the Act.

We found that, for certain ferrosilicon products, CBCC and Minasligas made home market sales at below COP prices within an extended period of time in substantial quantities. Further, we found that these sales prices did not permit for the recovery of costs within a reasonable period of time. We therefore excluded these sales from our analysis in accordance with section 773(b)(1) of the Act.

D. Calculation of CV

For those ferrosilicon products for which we could not determine the NV based on home market sales either because (1) There were no contemporaneous sales of a comparable product or (2) all contemporaneous sales of the comparison product failed the COP test, we compared export prices to CV. In accordance with section 773(e)(1) of the Act, we calculated CV based on the sum of the COM of the product sold in the United States, plus amounts for home market selling, general and administrative expenses (SG&A), home market profit and U.S. packing costs. We calculated each respondent's CV based on the methodology described in the ''Calculation of COP'' section of this notice, above. In accordance with section 773(e)(2)(A), we used the actual amounts incurred and realized by CBCC and Minasligas in connection with the production and sale of the foreign like product, in the ordinary course of trade, for consumption in the foreign country to calculate home market SG&A and profit. In accordance with section 773(e) of the Act, we added to CV the amount of ICMS/IPI taxes incurred on purchases of raw material inputs for CBCC. For Minasligas, we added to CV the greater of either (1) the actual home market IPI/ICMS taxes paid on raw material inputs or (2) the amount of ICMS tax collected by the Brazilian government on export sales. (See Final Results of Administrative Review: Silicon Metal from Brazil, 62 FR 1970 1976 (January 14, 1997)).

Price to Price Comparisons

Where there were contemporaneous sales of the comparison product that passed the COP test, we based NV on home market prices. For each of the respondents, we made adjustments, where appropriate, for physical differences in the merchandise in accordance with section 773(a)(6)(C)(ii) of the Act. (For a discussion of the calculation of the DIFMER, see the ''Product Comparisons'' section of this notice, above.) In addition, we deducted home market packing costs and added U.S. packing costs in accordance with sections 773(a)(6) (A) and (B) of the Act.

CBCC and Minasligas reported negative U.S. credit expenses (*i.e.*, credit revenue) based on their claims that unique financing arrangements for export sales, called advance exchange contracts (ACCs)), allowed the respondents to receive payment for their U.S. sales prior to the date of shipment. At verification we determined that ACCs work as follows. A producer goes to a Brazilian bank that it has a line of credit with, and applies for an ACC. At this time, the producer must specify the product to be exported. The name of the export country, customer and the value of particular sales may be specified, but these variables are not fixed. On the date the ACC is signed by the bank, the producer receives the value of the ACC in Brazilian Reais. At a later date, the producer must present documentation to the bank proving that the money obtained under the ACC was used to produce merchandise for exportation (*e.g.*, the commercial invoice, bill of lading, etc.). After receiving the merchandise, the U.S. customer pays the bank directly. Once the bank has received payment, the Brazilian bank

charges the producer bank fees equal to the interest charged for the number of days the ACC was outstanding (*i.e.*, the number of days between the date the producer received the money under the ACC and the date the U.S. customer paid the bank).

We have disallowed CBCC's and Minasligas' claimed credit revenue/negative U.S. credit expenses for purposes of the preliminary results because we do not consider the ACCs to be directly related to the U.S. sales made during the POR. Evidence on the record indicating that the ACC was not directly linked with the U.S. sales in question is as follows: (1) The export country, customer, and value of the sale were not fixed on the date the ACC was signed; (2) ACCs were obtained prior to the U.S. date of sale for all of CBCC's U.S. sales and certain sales made by Minasligas. Therefore, the ACC did not pertain to a particular U.S. sale but instead pertained to future *unspecified* shipments; (3) the amount borrowed under certain ACCs did not correspond exactly with the value of the U.S. sale which was later shipped; (4) in certain instances, more than one ACC was used to finance a single U.S. transaction; and (5) certain ACCs were used to finance more than one U.S. export. (For a further discussion of ACCs, see the ''Concurrence Memorandum'' dated April 1, 1997, on file in room B–099 of the main Commerce building.)

In accordance with section 773(a)(6)(C) of the Act, the Department makes circumstance of sale (COS) adjustments to NV in order to account for the difference in credit terms between U.S. and home market sales. Because CBCC and Minasligas receive financing for their export sales prior to the date of shipment and the U.S. customer pays the Brazilian bank directly, the respondents do not forego payment from the U.S. customer but instead pay bank charges on U.S. sales. These bank charges represent the interest expense incurred between the date the respondent received an advance under an ACC and the date the U.S. customer paid the bank. For purposes of calculating U.S. credit expenses, we have used the actual bank charges incurred on each U.S. sale as the cost of extending credit to the customer. (See the CBCC and Minasligas ''Verification Reports'' dated March 19, 1997, on file in room B–099 of the main Commerce building.)

Pursuant to section 773(a)(6) of the Act, we made deductions, where appropriate, from the starting price for rebates, inland freight and IPI taxes. With respect to ICMS taxes for Minasligas, we deducted the difference between the ICMS tax incurred on the home market sale and the claimed ICMS tax on the U.S. sale. For CBCC, we deducted the reported ICMS tax. We made circumstance of sale adjustments to NV for direct expenses, where appropriate, in accordance with section 773(a)(6)(C)(iii) of the Act. In doing so, we deducted home market credit expenses and, where appropriate, added U.S. credit expenses, U.S. chemical analysis and weight inspection fees, and U.S. port charges. Neither CBCC nor Minasligas had any short-term borrowings during the POR. Therefore, we calculated credit expenses for all home market sales using the average ''taxa referential'' rate offered on short-term transactions during the POR by the Central Bank of Brazil. In addition, for sales made on a consignment basis, we recalculated the credit period to include the number of days between the date the consignee was invoiced for the merchandise it consumed and the date the respondent received payment from the home market customer. In addition, we considered the date of sale for consignment sales to be the date that the respondent invoiced the customer for the merchandise the consignee notified the respondent it had consumed.

We made company-specific-adjustments for price-to-price comparisons as follows:

CBCC

We calculated NV based on packed, FOB plant and CIF prices to unaffiliated customers. We added the amount of interest revenue actually collected on home market sales in instances where the customer paid late. Section 773(a)(1)(B) of the Act directs that we calculate NV on the basis of the price at which the ''foreign like product is first sold.'' Foreign like product, in turn, is defined by section 771(16) of the Act as merchandise that is produced in the same country and by the same person as the merchandise which is the subject of the investigation. Therefore, because CBCC sold only self-produced merchandise to the United States, the statute prohibits using sales of merchandise produced by persons other than CBCC in the calculation of normal value. Accordingly, we excluded from the calculation of NV all re-sales of merchandise which was not produced by CBCC.

In addition, we excluded all sales reported in the home market database which were determined to be either cancelled or reported twice in the sales listing. We did not deduct reported IPI taxes for four home market customers because it was determined at verification that the ferrosilicon these customers purchased was used to produce merchandise for exportation. Therefore, these customers were exempt from paying IPI taxes during the POR. Finally, we calculated a packing cost for one sale where no packing cost was reported because the sale was actually packed in bags.

We adjusted for commissions as follows: Where commissions were paid on some, but not all, home market sales used to calculate NV, and no commissions were paid on a U.S. sale used to calculate export price, we deducted the home market commission from NV and added to NV the lesser of either (1) The indirect selling expenses incurred on the U.S. sale or (2) the weighted-average amount of the commissions paid on the home market sales. We recalculated U.S. inventory carrying costs as follows: (1) The credit period was recalculated using the number of days in inventory at the plant confirmed at verification; and (2) because CBCC had no short-term borrowings during the POR, we calculated U.S. inventory carrying costs using the average ''taxa referential'' rate offered on short-term transactions by the Central Bank of Brazil. (See the ''Concurrence Memorandum'' dated April 1, 1997, and the verification report dated March 19, 1997 on file in room B–099 of the main commerce building.)

Minasligas

We calculated NV based on packed, FOB plant and CIF prices to unaffiliated customers. For those home market shipments which Minasligas claimed were made pursuant to long-term contracts, we based the date of sale on the invoice date because, based on information gathered at verification, we did not find the essential terms of sale (*i.e.*, price and quantity) to be fixed on the date of contract. Specifically, we noted that the prices and quantities were frequently modified after the date of the contract, there were no penalties imposed by Minasligas in instances where the customer did not purchase the quantity specified in the contract, and the shipping schedules specified by the customer were frequently changed and/or not met. (For a further discussion of Minasligas' long-term contracts, see the ''Concurrence Memorandum'' dated April 1, 1997, on file in room B–099 of the main Commerce building.) We corrected the reported payment date for one transaction to reflect the actual payment date confirmed at verification.

Price to Constructed Value Comparisons

Where we compared export prices to CV, we deducted from CV the weighted-average home market direct selling

expenses and added the product specific U.S. direct selling expenses in accordance with sections 773(a)(8) and 773(a)(6)(iii) of the Act.

Currency Conversion

For purposes of the preliminary results, we made currency conversions based on the official exchange rates in effect on the dates of the U.S. sales as certified by the Federal Reserve Bank of New York. Section 773A(a) of the Act directs the Department to use a daily exchange rate in order to convert foreign currencies into U.S. dollars, unless the daily rate involves a ''fluctuation.'' In accordance with the Department's practice, we have determined that a fluctuation exists when the daily exchange rate differs from a benchmark by 2.25 percent. The benchmark is defined as the rolling average of rates for the past 40 business days. When we determine that a fluctuation exists, we substitute the benchmark for the daily rate.

Preliminary Results of the Review

As a result of this review, we preliminarily determine that the following weighted-average dumping margins exist for the period March 1, 1995 through February 29, 1996:

Manufacturer/exporter	Margin (percent)
CBCC	2.27
Minasligas	7.98

Parties to the proceeding may request disclosure within 5 days of the date of publication of this notice. Any interested party may request a hearing within 10 days of the date of publication. Any hearing, if requested, will be held 44 days after the publication of this notice, or the first workday thereafter. Interested parties are invited to comment on the preliminary results. Parties who submit arguments in this proceeding are requested to submit with each argument: (1) A statement of the issue: and (2) a brief summary of the argument. All case briefs must be submitted within 30 days of the date of publication of this notice. Rebuttal briefs, which are limited to issues raised in the case briefs, may be filed not later than 37 days after the date of publication. The Department will publish a notice of the final results of this administrative review, which will include the results of its analysis of issues raised in any such written comments within 120 days from the publication of these preliminary results.

The Department shall determine, and the Customs Service shall assess, antidumping duties on all appropriate entries. Individual differences between EP and NV may vary from the percentages stated above. Upon completion of this review, the Department will issue appraisement instructions directly to the Customs Service. The final results of this review shall be the basis for the assessment of antidumping duties on entries of merchandise covered by the determination and for future deposits of estimated duties. For duty assessment purposes, we calculated an importer-specific assessment rate by aggregating the dumping margins calculated for all U.S. sales to each importer and dividing this amount by the total quantity of subject merchandise sold to each of the respective importers. This specific rate calculated for each importer will be used for the assessment of antidumping duties on the relevant entries of subject merchandise during the POR.

Furthermore, the following deposit requirements will be effective upon completion of the final results of this administrative review for all shipments of ferrosilicon from Brazil entered, or withdrawn from warehouse, for consumption on or after the publication date of the final results of this administrative review, as provided by section 751(a)(1) of the Act: (1) The cash deposit rate for CBCC and Minasligas will be the rates established in the final results of administrative review, except if the rate is less than 0.5 percent, *ad valorem* and, therefore, *de minimis* within the meaning of 19 CFR 353.6, the cash deposit rate will be zero; (2) for merchandise exported by manufacturers or exporters not covered in this review but covered in the original less than fair value (LTFV) investigation or a previous review, the cash deposit rate will continue to be the company-specific rate published in the most recent period; (3) if the exporter is not a firm covered in this review, a previous review, or the LTFV investigation, but the manufacturer is, the cash deposit rate will be the rate established for the most recent period for the manufacturer of the merchandise; and (4) if neither the exporter nor the manufacturer is a firm covered in this or any previous reviews, the cash deposit rate will be 35.95 percent, the ''All Others'' rate made effective by the antidumping duty order (59 FR 11769, March 14, 1994). These requirements, when imposed, shall remain in effect until publication of the final results of the next administrative review.

This notice serves as a preliminary reminder to importers of their responsibility under 19 CFR 353.26 to file a certificate regarding the reimbursement of antidumping duties prior to liquidation of the relevant entries during this review period. Failure to comply with this requirement could result in the Secretary's presumption that reimbursement of antidumping duties occurred and the subsequent assessment of double antidumping duties.

This administrative review and notice are in accordance with section 751(a)(1) of the Act (19 U.S.C. 1675(a)(1)) and 19 CFR 353.22.

Dated: April 1, 1997.

Robert S. LaRussa,

Acting Assistant Secretary for Import Administration.

[FR Doc. 97–8956 Filed 4–7–97; 8:45 am]

BILLING CODE 3510–DS–P

DEPARTMENT OF COMMERCE

International Trade Administration

[A–412–602]

Certain Forged Steel Crankshafts From the United Kingdom; Final Results of Antidumping Duty Administrative Review and Revocation of Antidumping Duty Order

AGENCY: Import Administration, International Trade Administration, Department of Commerce

ACTION: Notice of Final Results of Antidumping Duty Administrative Review and Revocation of Antidumping Duty Order.

SUMMARY: On December 3, 1996, the Department of Commerce (the Department) published the preliminary results of its administrative review of the antidumping duty order on certain forged steel crankshafts from the United Kingdom (61 FR 64055). This review covers shipments of this merchandise to the United States during the period September 1, 1994 through August 31, 1995.

We gave interested parties an opportunity to comment on our preliminary results. Based on our analysis of the comments and rebuttal comments received, we have corrected certain clerical errors in the margin calculations. The final weighted-average dumping margin for the reviewed firm is listed below in the section entitled ''Final Results of the Review.''

EFFECTIVE DATE: April 8, 1997.

FOR FURTHER INFORMATION CONTACT: David Dirstine, Lyn Johnson, or Richard Rimlinger, Import Administration, International Trade Administration, U.S. Department of Commerce, 14th Street and Constitution Avenue, NW,

Washington D.C. 20230; telephone (202) 482–4733.

Applicable Statute

Unless otherwise indicated, all citations to the statute are references to the provisions effective January 1, 1995, the effective date of the amendments made to the Tariff Act of 1930 (the Act) by the Uruguay Round Agreements Act (URAA). In addition, unless otherwise indicated, all citations to the Department's regulations are to the current regulations, as amended by the interim regulations published in the **Federal Register** on May 11, 1995 (60 FR 25130).

SUPPLEMENTARY INFORMATION:

Background

On December 3, 1996, the Department published the preliminary results of its administrative review of the antidumping duty order on certain forged steel crankshafts from the United Kingdom (61 FR 64055). This review covers shipments of this merchandise to the United States during the period September 1, 1994 through August 31, 1995.

We gave interested parties an opportunity to comment on our preliminary results. At the request of petitioner, the Krupp Gerlach Company (KGC), we held a public hearing on January 21, 1997. The Department has now conducted this administrative review in accordance with section 751 of the Act.

Scope of Review

Imports covered by this review are certain forged steel crankshafts. The term ''crankshafts,'' as used in this review, includes forged carbon or alloy steel crankshafts with a shipping weight between 40 and 750 pounds, whether machined or unmachined. These products are currently classifiable under item numbers 8483.10.10.10, 8483.10.10.30, 8483.10.30.10, and 8483.10.30.50 of the Harmonized Tariff Schedule (HTS). Neither cast crankshafts nor forged crankshafts with shipping weights of less than 40 pounds or more than 750 pounds are subject to this review. The HTS item numbers are provided for convenience and Customs purposes. The written description remains dispositive of the scope of the order.

This review covers one manufacturer/exporter of crankshafts, British Steel Forgings (BSF), and the period September 1, 1994 through August 31, 1995.

Changes Since the Preliminary Results

Based on our analysis of comments received, we have made some changes in the final results in our calculations for the preliminary results of review, we inadvertently did not take into account credit expense adjustments that respondent reported prior to verification for certain U.S. models when making circumstance-of-sale adjustments. We have included the correct credit costs in our final calculations. We also improperly converted amounts stated in Pounds Sterling to U.S. dollars by multiplying amounts stated in Pounds Sterling by the applicable-exchange-rate-conversion factors when, in fact, the Pounds Sterling amounts should have been divided by those conversion factors. We have converted currencies correctly in our final calculations. We incorrectly made deductions from, rather than additions to, home market (HM) sales for certain supplemental charges. We made the appropriate corrections for these final results. Finally, we inadvertently omitted supplemental charges related to U.S. sales which resulted in understated U.S. prices. We added these supplemental charges to the relevant U.S. sales for these final results.

Analysis of Comments Received

We gave interested parties an opportunity to comment on the preliminary results. On January 2, and January 9, 1997, we received case and rebuttal briefs from KGC and BSF.

Comment 1: KGC argues that the Department incorrectly calculated constructed value (CV) because it computed a simple-average profit figure using only the profit margins of the BSF crankshaft forging and machining facilities and did not include the profit realized by British Steels Engineering Steels (BSES), the division that supplies the steel for producing crankshafts. KGC argues that, because the Department considers BSF and BSES to be divisions of the same corporation for purposes of determining raw material costs, they also must be treated as a single corporate entity for purposes of determining the profits generated by their combined activities.

KGC further argues that the Department incorrectly included in its calculations the loss realized by one of the four crankshaft forging and machining facilities. KGC argues that, as stated in § 773(e)(2)(A) of the Act, as amended by the URAA, CV must be based on profits (i.e., not losses) realized in the ordinary course of trade. Therefore, KGC contends, the Department should not have allowed this loss to reduce average profit used for CV.

In rebuttal, BSF states that the Department correctly calculated the profit percentage used in the calculation of CV. BSF contends that it properly determined profit by referring to the management reports that it uses to prepare the consolidated financial statements at the level of reporting which most specifically relates to the sale of crankshafts in the United Kingdom, *i.e.*, the facilities which produce and sell crankshafts for consumption in the United Kingdom and reflected in the financial records of those facilities. BSF argues that, when BSES ships steel to BSF (another division of the same company) for processing into crankshafts, there is no sale involved; rather, BSF asserts, it is making an interdivisional transfer of raw materials within the same company. BSF further argues that BSES's profit on sales of a full range of products including downstream steel products to customers outside of the company has nothing to do with BSF's profit on sales on crankshafts. BSF contends that, contrary to KGC's interpretation, nowhere in the URAA or the Statement of Administrative Action (SAA) is it ever suggested that, in computing the level of profit, the Department should ignore facilities at which expenses exceeded revenue.

Department's Position: As in the previous review, we continue to consider BSF and BSES to be divisions of the same corporate entity. *See Certain Forged Steel Crankshafts from the United Kingdom*, 61 FR 54613 (October 21, 1996) (*Crankshafts V*). However, this does not necessarily mean that the combined profits and losses of these two sister divisions of the same corporate entity should be used as the profit reflective of crankshaft sales. First, we do not consider the transfer of the raw material, *i.e.*, steel from one division to another division within the same company, to be a transaction in this case, so there is no profit present in that transaction. Second, there is no connection between crankshafts and the profit that BSES realizes on its wide line of steel products, many of which have no relationship whatsoever with crankshafts.

We note that for the preliminary results we used the combined profit of BSF's four crankshaft-forging and machining facilities but incorrectly stated to interested parties that we had used a simple average profit figure for these facilities. For these final results we have used a profit figure based on the combination of the weighted-average profit rates for each of the four

crankshaft-forging and machining facilities. This rate is appropriate because, as a combined rate, it is directly related to the production and sale of the subject merchandise.

With respect to petitioner's argument that for the profit calculation we must exclude losses by one of BSF's facilities, we disagree. Contrary to our statement in the preliminary results of this review, we did not base profit for CV on the methodology set forth in § 773(e)(2)(A) of the statute. Rather, the Department was unable to calculate the actual amounts of profit realized in connection with the production and sale of the foreign like product because the information to calculate a profit on that basis was not available. Accordingly, as facts available, we used the actual amounts of profit realized by BSF in connection with the production and sale of merchandise that is in the same general category of products as the subject merchandise, the alternative methodology set forth in § 773(e)(2)(B)(i) of the statute. This alternative method does not require that all sales used to determine the profit amount be within the ordinary course of trade. Therefore, we calculated the weighted-average profit based upon the profit experience of each of BSF's manufacturing plants that produce crankshafts (*i.e.*, the same general category of products as the subject merchandise).

Moreover, the profit and loss experience of the four plants is relevant to the overall profit determination for the foreign like product because those facilities each produce subject merchandise (or foreign like product).

Comment 2: KGC argues that, unless the Department uses the profit of both BSES and BSF in its computation of profit for CV, it must use transfer prices between BSES and BSF rather than cost of production (COP) as the measure of BSF's raw material cost of steel. In rebuttal, BSF contends that KGC essentially repeats its arguments that it made during the fifth administrative review and which the Department rejected.

Department's Position: We have addressed the issue of profit in response to the previous comment. Regarding the cost of steel, because BSF and BSES are divisions of the same corporation, BSF's steel cost for producing crankshafts is the COP of the steel manufactured by BSES. Therefore, we used the COP data provided by BSF, which we verified, in calculating CV. *See Crankshafts V* at 54614.

Comment 3: KGC argues that the Department incorrectly calculated normal value (NV) for a HM crankshaft model which was used for price-to-price comparisons to two crankshaft models sold in the United States and provides calculations it conducted. KGC contends that the Department's calculations understate the true NV of the HM model by more than ten percent.

BSF notes that certain supplemental charges were incorrectly subtracted from, rather than added to, HM models.

Department's Position: We agree with petitioner in part. We inadvertently deducted two supplemental charges applicable to HM sales from, rather than added to, HM price for the preliminary results. We have corrected this error for these final results. In addition, as a result of verification, we recalculated the first supplemental charge and used the recalculated value in the preliminary results. However, in its calculations for its case brief, KGC used the pre-verification value for the first supplemental charge rather than the recalculated amount. Moreover, KGC applied the highest reported expenses for shipments of the comparator model in its calculations as opposed to a weighted-average expense amount which we used in our preliminary calculations. Therefore, KGC's calculation of NV does not reflect the information on the record and our practice.

Comment 4: KGC argues that the Department should apply as ''best information available'' (*i.e.*, facts available) a 9.77 percent margin to partially machined crankshafts which is the BIA rate that the Department applied to this merchandise in the third administrative review because the record of this review does not provide an adequate basis to assess the accuracy of the information BSF has provided with regard to its partially machined crankshafts.

Specifically, KGC argues that the record in this review does not provide adequate information to ensure that the Department calculated NV for BSF's partially machined crankshafts properly. KGC first claims that BSF failed to describe in its response the rudimentary machining processes that it applied to its partially machined crankshafts and the costs associated with each such process. Second, KGC claims that there is no explanation on the record as to why the total costs BSF reported in its supplemental questionnaire response for these partially machined crankshafts do not tie to the sum of the forging costs and machining costs reported by BSF in its initial questionnaire response. Third, KGC notes that the Department did not address partially machined crankshafts in its verification report.

In response, BSF states that petitioner never argues that the information on the record is incorrect but only that information which was not supplied was never verified. BSF argues that the total costs for the partially machined crankshafts which it submitted in its supplemental response are correct. BSF further contends that it described in detail the rudimentary machining processes involved in the production of its partially machined crankshafts in its initial questionnaire response and in its supplemental questionnaire response. BSF suggests that KGC's confusion and inability to tie total costs submitted for partially machined crankshafts to the sum of the forging and machining costs separately submitted by BSF is the result of KGC erroneously considering COP and transfer-price data of steel that BSF uses to make crankshafts as submitted in a table in BSF's initial questionnaire response to be costs of forging. BSF notes that the Department never requested that it report separately the costs of forging for partially machined crankshafts and, therefore, it never submitted such data. However, BSF contends that the total costs of the partially machined crankshafts which it did submit are nonetheless accurate and could still be verified by the Department if necessary. The Department, according to BSF, should reject KGC's claim that BIA should be applied to partially-machined crankshafts.

Department's Position: We are satisfied with BSF's comprehensive description of the process of manufacturing partially machined crankshafts. Our analysis of the record evidence and our findings at verification give us no reason to believe that the total cost data submitted for partially machined crankshafts was inaccurate. The Department's regulations provide for significant flexibility in conducting verifications by permitting the verification of a sample of data that the Department considers relevant to factual information submitted. Recognizing that it is administratively impossible for us to verify every topic, we purposefully selected those items to examine in detail that we considered to reflect the universe of subject merchandise in this proceeding., *i.e.*, a complete examination of the costs of the one HM model alleged to have been sold below cost, a complete examination of the CV methodology and calculation for a selected model sold in the United States, and a complete examination of the machining costs for a machined crankshaft. Other than the corrections and recalculations as noted in our verification report and analysis

memorandum, we found the data submitted by BSF to be accurate and we have no reason to disregard the other portions of its response (*e.g.*, BSF's data regarding partially machined crankshafts).

Comment 5: Based on a press release and newspaper article announcing that BSF's parent sold the respondent's forging facilities to a new company, KGC argues that, given the uncertainty about the future ownership and potential business plans of BSF, the Department cannot reasonably reach the conclusion, required under 19 CFR § 353.25(a)(1)(ii)), that BSF or its successor is not likely to export crankshafts to the United States in the future at less than NV. KGC urges the Department to continue the existing order until the Department can reasonably determine that BSF's future U.S. pricing practices will not result in less-than-NV sales.

In rebuttal, BSF argues that KGC provides no legal basis to support its contention that the Department should not revoke the existing order as it cannot reasonably determine that BSF is unlikely to make sales at less than NV. BSF further argues that the lack of precedent to support KGC's argument is not surprising; BSF has not discovered any instance in which the Department has decided not to revoke an order because of a change in ownership. Citing *Toshiba Corp.* v. *United States*, 15 CIT 597, 600 (1991) (*Toshiba*), BSF argues that the Department's policy in a revocation proceeding is to examine only the information integral to its antidumping investigation and not to gather all economic or financial information about a company regardless of its relevance or credibility. BSF further argues that, in light of *Toshiba*, KGC's assertion that the proposed sale of BSF in some way affects the Department's revocation determination is incorrect. BSF concludes that its record of three years without dumping margins provides abundant evidence that sales of crankshafts by BSF compete fairly in the United States. BSF urges the Department to continue its practice of revoking orders after three years of *de minimis* margins.

Department's Position: Pursuant to the Department's revocation requirements under 19 CFR § 353.25(a), respondent in this case filed a timely request for revocation under § 353.25(b), certified that sales in the current review period were made at not less than normal value under § 353.25(b)(1), and has established the requisite three consecutive years of *de minimis* margins under § 353.25(a)(2)(i). With respect to the issue of likelihood of resumption of dumping under § 353.25(a)(2)(ii), no evidence was submitted on the record of this case in support of the contention that BSF is likely to resume dumping after revocation of the order. Petitioner has instead argued that the most recent change in the company's ownership by itself provides a basis for the Department to deny revocation in this case because ''the Department cannot reasonably reach the conclusion, required under 19 CFR § 353.25(a)(1)(ii), that BSF or its successor is unlikely to export crankshafts to the United States in the future at less than NV.'' KGC January 2, 1997 submission at 22.

We disagree. Petitioner has failed to establish any relationship between the reported change in ownership and the likelihood of resumption of dumping by BSF. Petitioner's argument amounts to mere speculation, particularly where, as here, the company under review has changed ownership in the past without a corresponding effect on the company's pricing behavior sufficient to generate a margin of dumping greater than *de minimis*. Indeed, the company's previous change of ownership combined with its continued pricing practices indicates that, for this product, changes in corporate ownership are not likely to affect pricing of subject merchandise sufficient to warrant denial of revocation. Contrary to petitioner's contention, the continuation of *de minimis* margins following the previous change in ownership tends to support revocation in this case because it indicates that such a change by itself does not have a meaningful effect on pricing in the crankshaft market.

In sum, there is no evidence on the record to substantiate petitioner's concern that BSF is likely to resume sales at dumped prices. Because BSF has made sales at not less than NV for three consecutive reviews and because there is no evidence on the record to indicate the likelihood of resumption of sales at dumped prices, we are revoking the antidumping duty order with respect to BSF. *See Final Results of Antidumping Duty Administrative Review and Revocation In Part; Pressure Sensitive Plastic Tape From Italy*, (55 FR 6031, 6032; February 21, 1990). Further, since BSF is the only company covered by the antidumping duty order on crankshafts from the United Kingdom, this action constitutes a revocation of the order.

Final Results of Review

As a result of our review, we determine that the following weighted-average margin exists for the period September 1, 1994 through August 31, 1995.

Manufacturer/Exporter	Margin percent
BSF	0.31

As stated in our response to comment number 5 above, we have determined that BSF has met the requirements for revocation set forth in 19 CFR § 353.25(a) of our regulations. We are therefore revoking the order with respect to crankshafts from the United Kingdom, based on our determination that BSF is the only known producer of crankshafts.

This revocation applies to all entries of the subject merchandise entered, or withdrawn from warehouse, for consumption on or after August 31, 1995. The Department will order the suspension of liquidation ended for all such entries and will instruct the Customs Service to release any cash deposit or bonds. The Department will further instruct Customs to refund with interest any cash deposits on entries made on or after August 31, 1995. In addition, the Department will terminate the review covering shipments of subject merchandise from the United Kingdom during the period September 1, 1995 through August 31, 1996, which was initiated on October 17, 1996 (61 FR 54154).

This notice also serves as a final reminder to importers of their responsibility under 19 CFR § 353.26 to file a certificate regarding the reimbursement of antidumping duties prior to liquidation of the relevant entries during this review period. Failure to comply with this requirement could result in the Secretary's presumption that reimbursement of antidumping duties occurred and the subsequent assessment of double antidumping duties.

This administrative review and notice are in accordance with section 751(a)(1) of the Act (19 U.S.C. 1675(a)(1)) and 19 CFR § 353.22.

Dated: April 2, 1997.

Robert S. LaRussa,

Acting Assistant Secretary for Import Administration.

[FR Doc. 97–8954 Filed 4–7–97; 8:45 am]

BILLING CODE 3510–DS–P

DEPARTMENT OF COMMERCE

International Trade Administration

[A–301–602]

Certain Fresh Cut Flowers From Colombia: Preliminary Results and Partial Rescission of Antidumping Duty Administrative Review

AGENCY: Import Administration, International Trade Administration, Department of Commerce.

ACTION: Notice of Preliminary Results of Antidumping Duty Administrative Review.

SUMMARY: In response to requests from interested parties, the Department of Commerce (the Department) is conducting an administrative review of the antidumping duty order on certain fresh cut flowers from Colombia for the period March 1, 1995 through February 29, 1996.

We have preliminarily determined that sales have been made below the normal value (NV) by various companies subject to this review. If these preliminary results are adopted in our final results of this administrative review, we will instruct U.S. Customs to assess antidumping duties equal to the difference between the export price (EP) or constructed export price (CEP) and the NV. We invite interested parties to comment on these preliminary results. Parties who submit arguments are requested to submit with each argument: (1) A statement of the issue; and (2) a brief summary of the argument. The deadlines for submission of argument are listed at the end of this notice. All memoranda referred to in this notice can be found in the public reading room, located in the Central Records Unit, room B–099 of the main Department of Commerce building.

EFFECTIVE DATE: April 8, 1997.

FOR FURTHER INFORMATION CONTACT: Carole Showers or Roy A. Malmrose, Office of AD/CVD Enforcement, Import Administration, International Trade Administration, U.S. Department of Commerce, 14th Street and Constitution Avenue, NW., Washington, DC 20230; telephone (202) 482–3217 or (202) 482–5414, respectively.

SUPPLEMENTARY INFORMATION:

The Applicable Statute and Regulations

Unless otherwise indicated, all citations to the Tariff Act of 1930, as amended (the Act), are references to the provisions effective January 1, 1995, the effective date of the amendments made to the Act by the Uruguay Round Agreements Act (URAA). In addition, unless otherwise indicated, all citations to the Department's regulations are to the current regulations, as amended by the interim regulations published in the **Federal Register** on May 11, 1995 (60 FR 25130).

Background

On March 4, 1996, the Department published in the **Federal Register** a notice of ''Opportunity to Request Administrative Review'' of the antidumping duty order on certain fresh cut flowers from Colombia. *See* 61 FR 8238. In accordance with 19 CFR 353.22(c), on April 22, 1996, we initiated an administrative review of this order. *See* 61 FR 17685. On August 21, 1996, in accordance with section 751(a)(3)(A) of the Act and 19 CFR 351.213(h)(2), we extended the deadline for these preliminary results until March 31, 1997. *See* 61 FR 43229. From February 17 through March 1, 1997, we verified the responses of seven respondents. The Department has conducted this administrative review in accordance with section 751 of the Act.

Imports covered by this review are shipments of certain fresh cut flowers from Colombia (standard carnations, miniature (spray) carnations, standard chrysanthemums and pompon chrysanthemums). These products are currently classifiable under item numbers 0603.10.30.00, 0603.10.70.10, 0603.10.70.20, and 0603.10.70.30 of the Harmonized Tariff Schedule (HTS). The HTS item numbers are provided for convenience and Customs purposes. The written description remains dispositive.

The period of review is March 1, 1995 through February 29, 1996.

In this administrative review, 473 companies were either named in the initiation notice or were affiliated with a company named in the initiation notice. We have separated these companies into the following categories: companies providing full responses (selected and non-selected); companies claiming they had no shipments during the POR; companies claiming they were bankrupt without responding further; companies that did not respond at all or that submitted a response after the deadline for submission of questionnaire responses; companies to which we were unable to deliver the questionnaire (i.e., unlocatable companies); and companies for which we are rescinding this review.

Respondent Selection

Unlike past administrative reviews of this order, this one is being conducted under statutorily mandated deadlines. On September 20, 1996, the Department issued a memorandum proposing to limit the number of exporters and producers examined in this review. The memorandum also proposed specific sampling methodologies. The Department invited interested parties to comment on both the proposal to limit the number of exporters and producers and the specific sampling methodologies described in the memorandum. Comments were submitted by the Floral Trade Council, the Asociacion Colombiana de Exportadores de Flores (''Asocolflores''), the HOSA Group, and the Caicedo Group. After considering these comments, on November 21, 1996, the Department decided to limit the number of respondents examined.

Section 777A(c)(2) of the Act provides the Department with the authority to determine margins by limiting its examination to a statistically valid sample of exporters or the largest volume of the subject merchandise that can reasonably be examined. This subparagraph is formulated as an exception to the general rule that each company for which a review is requested will be individually examined and receive a calculated margin. Since the resources available to the Department are limited, we found it administrably necessary to restrict the number of respondents selected for examination in order to conduct thorough and accurate analyses of responses to our questionnaires and other relevant issues within the statutory deadlines. Restricting the number of respondents for examination is consistent with other past cases involving large numbers of potential respondents, statutory deadlines and limited resources. *See*, for example, *Preliminary Determination of Sales at Less Than Fair Value: Pasta from Italy,* 61 FR 1344 (January 19, 1996) and *Preliminary Determination of Sales at Less Than Fair Value: Brake Drums and Brake Rotors from the People's Republic of China,* 61 FR 53190 (October 10, 1996).

Therefore, given the large number of producers and/or exporters involved in the review and the Department's limited resources, the Department limited its examination to the 13 groups of exporters and producers accounting for the largest volume of flowers, in accordance with section 777A(c)(2)(B) of the Act. These exporters accounted for approximately 50 percent by volume of the exports made during the POR by the companies and groups of companies that responded to our questionnaire. These 13 respondents are the Agrodex Group (''Agrodex''); Caicedo Group (''Caicedo''); Claveles Colombianos

Group (''Clavecol''); Cultivos Miramonte Group (''Cultivos Miramonte''); Floraterra Group (''Floraterra''); Flores Colon, Ltda (''Flores Colon''); Florex Group (''Florex''); Guacatay Group (''Guacatay''); HOSA Group (''HOSA''); Maxima Farms Group (''Maxima Farms''); Queens Flowers Group (''Queens''); Tinzuque Group (''Tinzuque''); and Tuchany Group (''Tuchany''). For further discussion on the issues of limiting the number of respondents and the selection of respondents, see the Memorandum from Team to Barbara R. Stafford, Deputy Assistant Secretary, Import Administration, dated November 21, 1996.

Affiliated Companies

During the course of this review, we examined closely the relationships between the selected respondents and other producers/exporters listed in our notice of initiation. Based on this examination, we concluded that one of Guacatay's importers was affiliated. Guacatay complied with our request to report sales by this importer as CEP sales.

In addition to our examination, several respondents filed responses on behalf of affiliated companies which were either not listed in the initiation notice, or were listed as independent companies in the initiation notice. On May 10, 1996, Asocolflores informed us that ''Caico'' was the same as the Caicedo Group. Therefore, while CAICO, the Caico Group and the Caicedo Group, are listed separately in our initiation notice, we are treating them as part of the same group. On October 1, 1996, respondent HOSA identified the five companies included in the HOSA Group. One of these companies, Innovacion Andina S.A., had been listed separately in our initiation. We are now listing it solely under the HOSA Group. In addition, both Agrodex and Queens submitted responses on behalf of more companies than were named in the initiation notice. We have included those companies in their respective groups.

With respect to the respondents other than the 13 selected respondents, we received the following information on affiliation. On May 10, 1996, respondents informed us that ''Agromonte Ltda'' was the same company as ''Flores Agromonte.'' Therefore, we have listed this company under its appropriate name, Flores Agromonte. In our initiation, we listed Floricola la Ramada Ltda. twice, once under the Santa Rosa Group and once by itself. Based on information received by respondents on July 19, 1996, we have now listed it only one time, under the Santa Rosa Group. Also, Agricola Benilda Ltda was mentioned twice in our initiation. It now appears only under the Aga Group. On August 5, 1996, Asocolflores informed us that Flores la Union/Santana is actually simply ''Santana'' and is a farm of Flores la Union Gomez Arago & Cia. Therefore, we are treating Santana as part of the Flores la Union Gomez Arago & Cia Group. Finally, the Bojaca Group, Floralex Group, Funza Group and Soagro Group responded on behalf of more affiliated companies than were named in the initiation notice. The companies affiliated with these groups are now listed as reported by the respondents.

Non-Selected Respondents

This is the first administrative review of any antidumping order in which the Department reviewed only the largest exporters, pursuant to section 777A(c)(2) of the Act. When, as in this case, only the largest exporters are selected and each given an individually calculated margin, there remain a number of exporters for whom an individual margin cannot be calculated. The statute is silent on how the margins should be calculated for these remaining non-selected respondents.

In this ninth review, we face the unusual situation of having requested full responses from all firms prior to our decision to review only the largest. We have assigned the non-selected, cooperative respondents a weighted-average margin based on the calculated margins of selected respondents, excluding any *de minimis* margins and margins based on facts available. Given the unique circumstances of this case, using the weighted-average margin is most consistent with the general structure of the statute. Further, although this is clearly not a nonmarket economy case, we have faced analogous situations in certain NME investigations where we were unable to examine all of the respondents. The methodology employed here is the same as that which we have used in those NME investigations. *See,* e.g., *Preliminary Determination of Sales at Less Than Fair Value: Honey from the People's Republic of China,* 60 FR 14725 (March 20, 1995) and *Preliminary Determination of Sales at Less Than Fair Value: Brake Drums and Brake Rotors from the People's Republic of China,* 61 FR 53190 (October 10, 1996). The firms in question are listed under ''Non-Selected Respondents'' in the *Preliminary Results of Review* section below.

No Shipments

We received responses from 64 firms indicating that they did not ship during the POR. We reviewed information from Customs listing all companies who had entries of subject merchandise during the POR. Since 40 of the companies that stated they had no shipments also did not appear on Customs data as having entries during the POR, we preliminarily determine that they did not ship during the POR. Consistent with our practice in previous reviews of this order, for those companies that did not ship during the POR which had previously been reviewed or investigated, their cash deposit rate will continue to be the company-specific rate published for the most recently reviewed period. For those companies that did not ship during the POR and which had not been previously reviewed or investigated, their cash deposit rate will be the ''all-others'' rate. These 40 firms are listed under ''No Shipments'' in the *Preliminary Results of Review* section below. For those 24 companies which stated that they had not shipped during the POR, but which did appear on the Customs data as having entries during the POR, we preliminarily determine that these companies have failed to cooperate with the proceeding. Therefore, we are applying an adverse facts available rate of 76.60 percent to these companies. We will, however, seek further information from these respondents and from Customs to determine whether these entries during the POR actually related to sales outside of the POR. These 24 companies are included under ''Non-Respondents'' in the *Preliminary Results of Review* section below.

Unlocatable Companies

We initiated reviews for 116 firms which could not be located in spite of our requests for assistance from such diverse sources as the Floral Trade Council (''FTC''), Asocolflores, the American Embassy in Bogota, and the U.S. Customs Service. Therefore, we were unable to conduct administrative reviews for these firms. Consistent with our practice in past administrative reviews of this order, we will assess duties on these firms in the following manner. For those unlocatable companies that were examined in a previous review, we will assess duties based on their company-specific rate from the most recent review. If we have not previously conducted a review of an unlocatable company, duties equal to the ''all others'' rate of 3.53 percent from the Less-Than-Fair-Value (LTFV) investigation will be assessed. The firms

in question are listed under ''Unlocatable'' in the *Preliminary Results of Review* section below.

Rescissions

Subsequent to the publication of our initiation notice, we received timely withdrawals of review requests from Agricola La Montana and My Flowers. Because there were no other requests for review for these companies from any other interested parties, we are rescinding this review with respect to these two companies in accordance with 19 CFR 351.213(d)(1). In addition, we received information on the record that Flower Factory, Hill Crest Gardens, Sunbelt Florals, and Eldorado Trading Corp were importers and not producers/exporters. Consequently, we are terminating the review with respect to these four firms.

Request To Preserve Revocation Eligibility

Under the current regulations, as amended by the interim regulations published in the **Federal Register** on May 11, 1995, the Department may revoke an order in part if: (1) One or more producers or resellers covered by the order have sold the merchandise at not less than foreign market value for a period of at least three consecutive years; (2) it is not likely that those persons will in the future sell the merchandise at less than foreign market value; and (3) the producers or resellers agree in writing to their immediate reinstatement in the order if the Department determines, subsequent to their revocation, that they have sold subject merchandise at less than foreign market value. See 19 CFR 353.25(a)(2). Since all requests for review in the eighth review period were withdrawn, the ninth review can only be the first of any three consecutive years. On November 27, 1996, seven producers/exporters of subject merchandise, who were not among the 13 selected, requested that they be included in this review so as to preserve their eligibility for possible revocation in the eleventh review.

The statute, at section 751(d)(1), states that Commerce ''*may revoke*, in whole or in part, a countervailing or antidumping duty order,'' (emphasis added). Therefore, the Department is under no obligation to provide for the possibility of revocation to these or any companies under the order. However, we recognize that the request by the seven respondents to preserve their revocation eligibility presents certain fundamental equity considerations. While we are unable to include these seven producers/exporters in this review, we intend to address their concerns. Therefore, we are considering several options concerning the appropriate way to allow for the possibility of future partial revocations in this order, while taking into account the Department's limited resources and the requirement that a company be verified in order to be revoked. Among others, we are considering the following three options. First, we could allow companies to make the claim, retrospectively, that they have not dumped for the past three years in the form of a ''changed circumstances'' review in the eleventh review (i.e., the first review in which revocations will be possible under this order). Second, we could allow a group of companies to claim prospectively that they will have zero or *de minimis* margins for the next three years and examine a random sample of each such group in each of the next reviews (i.e., beginning in the tenth review). Finally, we could allow a group of companies to claim prospectively that they will have zero or *de minimis* margins for the next three years and examine certain elements of each respondent's data (rather than a random sample of all respondents). We invite parties to comment on these options, as well as any others that take into account the above considerations. For further discussion on this issue, *see* Memorandum from Team to Robert S. LaRussa, Acting Assistant Secretary for Import Administration, dated February 21, 1997.

Verification

Section 782(i) of the Act requires the Department to verify all information relied upon in making a final determination in a review under section 751(a), if no verification was made during the two immediately preceding reviews. Therefore, we verified only those companies that were not verified in *Certain Fresh Cut Flowers From Colombia: Final Results of Antidumping Duty Administrative Review*, 61 FR 42833 (August 19, 1996) (''*Flowers 1991–94*''). As provided in section 782(i)(3)(B) of the Act, we verified information provided by the following respondents, using standard verification procedures, including on-site examination of relevant sales and financial records, and selection of original documentation containing relevant information: Caicedo, Clavecol, Floraterra, Maxima Farms, Flores Colon, Queens, and Tuchany.

Duty Absorption

On March 29, 1996, the petitioner requested that the Department determine whether antidumping duties had been absorbed by respondents during the POR. Section 751(a)(4) of the Act provides for the Department, if requested, to determine, during an administrative review initiated two or four years after publication of the order, whether antidumping duties have been absorbed by a foreign producer or exporter subject to the order, if the subject merchandise is sold in the United States through an importer who is affiliated with such foreign producer or exporter. Section 751(a)(4) was added to the Act by the URAA. The Department's interim regulations do not address this provision of the Act.

For transition orders as defined in section 751(c)(6)(C) of the Act, i.e., orders in effect as of January 1, 1995, section 351.213(j)(2) of the Department's proposed antidumping regulations provides that the Department will make a duty absorption determination, if requested, for any administrative review initiated in 1996 or 1998. *See* 61 FR 7308, 7366 (February 27, 1996). The preamble to the proposed antidumping regulations explains that reviews initiated in 1996 will be considered initiated in the second year and reviews initiated in 1998 will be considered initiated in the fourth year. *Id.* at 7308, 7317. Although these proposed antidumping regulations are not yet binding upon the Department, they do constitute a public statement of how the Department expects to proceed in construing section 751(a)(4) of the amended statute. This approach assures that interested parties will have the opportunity to request a duty absorption determination on entries for which the second and fourth years following an order have already passed, prior to the time for sunset review of the order under section 751(c). Because the order on certain fresh cut flowers from Colombia has been in effect since 1986, this is a transition order. Consequently, based on the policy stated above, it is appropriate for the Department to examine duty absorption in this ninth review, which was initiated in 1996.

The statute, at section 751(a)(4), provides that duty absorption may occur if the subject merchandise is sold in the United States through an affiliated importer. Of the selected respondents, the following have affiliated importers: Agrodex, Caicedo, Clavecol, Cultivos Miramonte, Floraterra, Florex, Guacatay, HOSA, Maxima Farms, Queens and Tuchany. Furthermore, we have preliminarily determined that there are dumping margins for the following companies with respect to the percentages of their U.S. sales by quantity indicated below:

Name of company	Percentage of U.S. affiliated importer sales with margin
Agrodex	13.71
Caicedo	100
Clavecol	19.66
Cultivos Miramonte	24.71
Floraterra	24.32
Florex	13.06
Guacatay	27.98
HOSA	21.73
Maxima Farms	31.37
Queens	18.97
Tuchany	22.33

In the case of Caicedo, we are unable to calculate a margin based on its response and have therefore determined its dumping margin entirely on the basis of facts available. In such cases, we assume duty absorption on all sales. With respect to those companies (with affiliated importers) whose margins are not determined based on facts available, we presume that the duties will be absorbed for those sales which were dumped, unless there is evidence (e.g., an agreement between the affiliated importer and the unaffiliated purchaser) that the unaffiliated purchasers in the United States will pay the full duty ultimately assessed on the subject merchandise. Although in this case certain companies have provided invoices which separately list an amount for estimated antidumping duties which they are charging their unaffiliated purchasers, none of these companies has presented evidence of agreements with unaffiliated purchasers to pay ultimately assessed antidumping duties. Under these circumstances, therefore, we preliminarily find that the antidumping duties have been absorbed by the above-listed firms on the percentage of U.S. sales indicated.

Use of Facts Available

Section 776(a)(1) of the Act states that if necessary information is not available on the record, the Department ''shall, subject to section 782(d), use the facts otherwise available in reaching the applicable determination under this title.'' Section 782(e) of the Act provides that the Department shall not decline to consider information that is submitted by an interested party and is necessary to the determination but does not meet all the applicable requirements established by the Department if: (1) The information is submitted by the deadline established for its submission; (2) the information can be verified; (3) the information is not so incomplete that it cannot serve as a reliable basis for reaching the applicable determination; (4) the interested party has demonstrated that it acted to the best of its ability in providing the information and meeting the requirements established by the Department with respect to the information; and (5) the information can be used without undue difficulties. Accordingly, in using the facts available, the Department may disregard information submitted by a respondent if any of the five criteria has not been met.

In circumstances where the Department determines that the use of facts available is appropriate, the Department must then determine whether an adverse inference is warranted. Section 776(b) of the Act provides that, where the Department ''finds that an interested party has failed to cooperate by not acting to the best of its ability to comply with a request for information,'' the Department ''may use an inference that is adverse to the interests of that party in selecting from among the facts otherwise available.''

For purposes of this review, certain companies received the Department's initial questionnaire, but either failed to respond entirely or responded after the deadline for submission without providing an explanation. Consequently, we must apply facts available. Further, as we determine that their failure to respond either entirely or in a timely fashion constitutes a failure to cooperate by not acting to the best of their ability, we will apply an adverse inference in selecting from the facts otherwise available. For all these companies, we have applied as adverse facts available the highest rate for any company from this or any prior segment of this proceeding. This rate is 76.60 percent. The companies in question are listed under ''Non-Respondents'' in the *Preliminary Results of Review* section below.

We are also applying an adverse facts available rate to exports made by the Oro Verde Group, consisting of Inversiones Miraflores S.A. and Inversiones Oro Verde S.A. The group responded to our original questionnaire only by stating that it did have small shipments during the POR and that it was on the verge of bankruptcy. Our supplemental questionnaire was returned as undeliverable. We find that this group did not fully respond to our questionnaire. Therefore, consistent with our treatment of bankrupt companies in *Flowers 1991–94* and our preliminary determination that the company did not cooperate to the best of its ability, we are applying to the Oro Verde Group a rate of 7.85 percent which is the higher of the highest rate ever applied to the group, or the highest rate calculated for any other company in this review. *See* Memorandum from Team to Richard W. Moreland, Acting Deputy Assistant Secretary, Import Administration, dated March 7, 1997.

Finally, we are applying an adverse facts available rate to one selected respondent, Caicedo. Although Caicedo provided information we requested which was necessary for our analysis, the majority of the information could not be verified as required by section 782(i) of the Act. Caicedo was not adequately prepared for our verification of its response, although it had received the verification outline well in advance of the verification. While certain of the preselected sales were tied to company records, the majority of other items on the sales verification agenda did not. In collecting information on certain items requested, the company's ''support documentation'' did not tie to either the response or the company's internal records. Notably, Caicedo was unable to produce grower's reports (the main source document for reporting sales information) for several of the customers we chose to review. In attempting to verify its response we learned that Caicedo had incorrectly reported most of its sales data. For example, classification of sales as EP or CEP had not been based on the type of sales (i.e., fixed-price or consignment, as required by the questionnaire), but on where the customer made payment (i.e., to its related importer in Miami or to Caicedo in Bogota). In addition, Caicedo did not report the date of sale appropriately, using the date that payment was

received instead of the date the invoice was issued. The company also mis-reported international freight, brokerage and handling, and days outstanding for numerous customers. Furthermore, while the verification of Caicedo's cost data was more successful, we learned of several errors in its reporting of costs. The most significant error, Caicedo's failure to include an inflation adjustment to its amortized costs, prevents us from calculating a normal value for Caicedo because of lack of information on the record.

Despite a question posed in a supplemental questionnaire concerning confusing or contradictory information on the classification of EP and CEP sales, and a statement at the beginning of the Miami verification that there seemed to be significant omissions in the field of international freight, Caicedo did not correct the errors in its sales response. The errors in the cost response were undetectable prior to verification. Moreover, despite extensive efforts during verification, neither the Department nor the company was able to correct the vast majority of these errors.

Although information submitted by Caicedo's affiliated importer, Southern Rainbow Corporation, was verified, we are unable to use it because we find that the totality of information submitted by Caicedo was so incomplete that it cannot serve as a reliable basis for determining any margin for Caicedo. Therefore, in accordance with section 782(e)(3) of the statute, we are declining to consider the information submitted by Caicedo.

The Department has used facts available where a company has failed verification despite our attempts to verify. *See* e.g., *Final Results: Antifriction Bearings (Other Than Tapered Roller Bearings) and Parts Thereof from France, et al.,* 62 FR 2081 (January 15, 1997) (*''AFBs VI''*); *Preliminary Results: Extruded Rubber Thread from Malaysia,* 61 FR 65019 (December 10, 1996); *Preliminary Results: Certain Cut-to-Length Carbon Steel Plate from Sweden,* 61 FR 51898 (October 4, 1996). Moreover, in *AFBs VI,* we concluded that a respondent did not act to the best of its ability when it was an experienced respondent in reviews of the order and when the questionnaire was not vague on the information requested. We reasoned that, in these circumstances, the respondent could reasonably be expected to know which types of essential data we request in each review, and to be conversant with the form and manner in which we require submission of the data. See 62 FR 2081, 2090.

Like the situation described in *AFBs VI,* Caicedo is a large, sophisticated corporation that has participated in previous reviews of this order. The questionnaire was explicit in its instructions on the classification of EP and CEP customers, date of sale and amortization of costs. Furthermore, the inflation adjustment to amortization has been a standard element in previous reviews of this order and Caicedo could reasonably be expected to know how to report its costs. On this basis, we preliminarily determine that application of adverse facts available is warranted as Caicedo failed to cooperate by acting to the best of its ability. Consequently, we are assigning Caicedo a rate of 25.58 percent, the highest rate ever applied to Caicedo in any portion of this proceeding. This rate was applied to Flores del Cauca (one of the farms of Caicedo). Consistent with the logic articulated in *AFBs VI,* we determine that this rate is sufficiently adverse to encourage full cooperation in future segments of the proceeding by ensuring that Caicedo does not benefit from its failure to cooperate fully (Statement of Administrative Action (''SAA''), at 200).

Because the facts available information which we are using in this review constitutes secondary information, we are required under section 776(c) of the Act to corroborate, to the extent practicable, the facts available from independent sources reasonably at our disposal. The SAA provides that ''corroborate'' means simply that the Department will satisfy itself that the secondary information to be used has probative value. (SAA, at *id.*) To corroborate the secondary information, the Department will, to the extent practicable, examine the reliability and relevance of the information to be used. However, unlike other types of information, such as input costs or selling expenses, there are no independent sources for calculated dumping margins. The only source for margins is administrative determinations and reviews. Thus, in an administrative review, if the Department relies upon a calculated dumping margin from a prior segment of the proceeding as facts available, the Department can normally be satisfied that the information has probative value and that it has complied with the corroboration requirements of section 776(i) of the Act. *See AFBs VI,* at 2087.

Fair Value Comparisons

Under the ''United States Price'' and ''Normal Value'' sections below, we have included certain company-specific issues. For further discussion of these issues, *See* Memorandum from Team to Richard W. Moreland, Acting Deputy for Import Administration, dated March 12, 1997.

United States Price

Consistent with section 777A(d)(2) of the Act and *Flowers 1991–94,* we determined that it was appropriate to average U.S. prices on a monthly basis in order (1) to use actual price information that is often available only on a monthly basis, (2) to account for large sales volumes, and (3) to account for perishable product pricing practices.

For the price to the United States, we used export price (EP) or constructed export price (CEP) as defined in sections 772(a) and 772(b) of the Act, as appropriate. CEP was used for consignment sales through unaffiliated U.S. consignees and sales (consignment or otherwise) made through affiliated importers.

We calculated EP based on the packed price, consisting of invoice price plus certain additional revenue, e.g., box charges and antidumping duties paid, (either f.o.b. Bogota, c.i.f. Miami or c.i.f. Chicago) to the first unaffiliated purchaser in the United States. We made deductions, where appropriate, for discounts and rebates, foreign inland freight, international (air) freight, brokerage and handling, U.S. customs fees, and return credits.

For sales made on consignment, CEP was calculated based on the packed price consisting of invoice price plus certain additional revenue, e.g., box charges and antidumping duties paid, charged by the consignee. For sales made through affiliated parties, CEP was based on the packed price, consisting of invoice price plus certain additional revenue, e.g., box charges and antidumping duties paid, to the first unaffiliated customer in the United States. We made adjustments to these prices, where appropriate, for box charges, discounts and rebates, foreign inland freight, international (air) freight, brokerage and handling, U.S. customs fees, direct selling expenses (credit expense and contributions to the Colombian Flower Council) relating to commercial activity in the United States, return credits, royalties and indirect selling expenses incurred in the home market that related to commercial activity in the United States. Finally, consistent with our practice in *Roses from Colombia,* 60 FR 6980 (February 6, 1995), we made adjustments for either commissions paid to unrelated U.S. consignees or the indirect U.S. selling expenses of related consignees.

Pursuant to section 772(d)(3) of the Act, the price was further reduced by an amount for profit to arrive at the CEP.

The CEP profit rate was calculated using the expenses incurred by the responding companies on their sales of the subject merchandise in the United States and of the like product in the home market (for those companies that had home market sales) and the profit associated with those sales.

Tuchany

We were unable to verify the interest rates on Tuchany's reported short-term U.S. loans during the POR; therefore, we were unable to verify Tuchany's reported U.S. interest rate. With the exception of this item, the response filed by Tuchany was verified. For this reason, in lieu of using the reported rate, we are using the rate which we observed for most of Tuchany's loans.

Normal Value

Section 773 of the Act provides that the normal value (NV) of the subject merchandise shall be (1) the price at which the foreign like product is first sold (or, in the absence of a sale, offered for sale) for consumption in the exporting country, in the usual commercial quantities and in the ordinary course of trade and, to the extent practicable, at the same level of trade as the export price or constructed export price, (2) the price at which the foreign like product is sold (or offered for sale) for consumption in a country other than the exporting country or the United States (third country sales), or (3) the constructed value of that merchandise.

Some companies in this review have sales in the home market of export quality flowers exceeding five percent of sales to the U.S. market, i.e., have a viable home market. However, consistent with our practice in previous reviews of this order and based on information provided by respondents, we have determined that these sales are not within the ordinary course of trade. For a further discussion, *see* Memorandum from Team to Barbara Stafford, Deputy Assistant Secretary, Import Administration, dated January 13, 1997.

Section 773(a)(4) of the Act states that if the administering authority determines that the normal value of the subject merchandise cannot be determined using home market prices, then, notwithstanding the possible use of third country prices, the normal value of the subject merchandise may be the constructed value of that merchandise. We received comments and factual information concerning this issue from respondents on August 7, 1996, and from petitioner on October 23, 1996.

We have used constructed value as the basis of normal value since the final results of the second antidumping duty administrative review of *Certain Fresh Cut Flowers from Colombia*, 55 FR 20491 (May 17, 1990). We based this determination on three factors: (1) the negative correlation of prices in third country markets to prices in the United States because of greater volatility and the sporadic nature of the U.S. market and differing peak price periods (holidays); (2) Colombian producers' relative lack of access to European markets; and (3) the perishability of the merchandise.

In *Flowers 1991–94*, we stated that our analysis of the third country markets was sufficient for us to reject the use of third country prices, even though we had not collected third country prices from respondents. A significant factor in the analysis was the Botero study. The Botero study relied upon in the *Flowers 1991–94* reviews demonstrated that third country prices were not reliable for purposes of foreign market value and was based upon data from the period 1982–1989. The study has since been updated to cover the period 1989 through 1995, which covers a portion of the POR. Based on the new Botero study, we find that differences in the demand patterns between the markets continue to exist and that seasonal demand and price cycles between the markets are statistically different.

Relying on the recent economic data submitted by respondents and consistent with the Department's practice in prior segments of this proceeding, we have determined that a particular market situation prevents a proper comparison between third country sales and U.S. sales within the meaning of section 773(a)(1)(B)(ii)(III) of the Act. Therefore, we have continued to use CV as the basis for normal value. *See* Memorandum from Team to Barbara R. Stafford, Deputy Assistant Secretary, Import Administration, dated November 21, 1996.

We calculated CV in accordance with section 773(e) of the Act. We included the cost of materials and fabrication, and the selling, general and administrative expenses reported by respondents. The per-unit constructed value was calculated by dividing the annual CV in pesos by the quantity of export quality flowers sold by the grower/exporter. We converted the peso per stem CV based on the date of the U.S. sale, in accordance with section 773A(a) of the Act. We consider non-export quality flowers (culls) that are produced in conjunction with export quality flowers to be by-products. Therefore, revenue from the sales of culls was offset against the cost of producing the export quality flowers.

We based selling, general and administrative expenses on the amounts incurred and realized by the respondents in connection with the production and sale of the foreign like product for consumption in the home market. Where respondents had no home market sales, we used the general and administrative expenses associated with their sales to all other markets. Regarding selling expenses, all respondents reporting sales of export quality flowers in the home market stated they had no selling expenses in that market. Therefore, as facts otherwise available, we did not include selling expenses for those respondents that had no home market sales.

Regarding profit, we verified that for those producers/exporters with home market sales of culls and/or export quality flowers, those sales were outside the ordinary course of trade because they were made at below cost prices. Consequently, we are unable to apply the methods specified in section 773(e)(2)(A) or 773(e)(2)(B)(ii) of the Act for calculating profit. Also, none of the respondents realized a profit on merchandise in the same general category as flowers produced for sale in Colombia. Therefore, we are not able to apply the profit methodology described in section 773(e)(2)(B)(i).

Section 773(e)(2)(B)(iii) permits the Department to use ''any other reasonable method'' to compute an amount for profit, provided that the amount ''may not exceed the amount normally realized by exporters or producers * * * in connection with the sale, for consumption in the foreign country, of merchandise that is in the same general category of products as the subject merchandise.'' Although we have sought information on the profits earned in Colombia by producers of merchandise that might be considered in the same general category of products as flowers in order to compute the ''profit cap'' described in 773(e)(2)(B)(iii), we have not been able to find any such producers. Therefore, we do not have a profit cap.

The SAA, at 171, anticipates this situation and directs that where Commerce cannot determine profit under the alternative methods described in sections 773(e)(2)(B)(i) and 773(e)(2)(B)(ii) or calculate a profit cap, the Department may apply 773(e)(2)(B)(iii) as the basis of facts available. The SAA further states that constructed value ''*must* include an *amount* * * * for profit,'' (emphasis added). SAA, at 169. We interpret this statement, particularly because of the

use of the words ''must'' and ''amount'' to mean that the profit figure used cannot be zero and must be positive. Therefore, as facts available, in this case we have developed a profit figure from the financial statements of a Colombian producer of agricultural and processed agricultural goods. We have preliminarily determined that it is appropriate to use the profit rate for that company, 5.00 percent of cost of production, for all respondents.

We added U.S. packing to constructed value. In addition, for EP sales, we made circumstance of sale adjustments for direct expenses, where appropriate, in accordance with section 773(a)(6)(C)(iii) of the Act.

Clavecol

Clavecol stated that it experienced high water subsoil levels at one of its farms and requested that the Department adjust its costs for this water damage. While we do not feel it is appropriate to adjust total costs, we do agree that the severe water damage resulted in an unusual decrease in productivity. Therefore, we have normalized the production level to make an appropriate adjustment for this loss. Normalization of the production levels when severe circumstances of nature result in unusual losses of crop is consistent with the Department's past practice. *See Final Determination of Sales at Less Than Fair Value: Fresh Cut Roses from Ecuador,* 60 FR 7019, 7038 (February 6, 1995).

Flores Colon

In accordance with section 773(f)(1)(A) of the Act, the Department will normally calculate costs on the basis of records kept by the exporter or producer of the merchandise, ''if such records are kept in accordance with the generally accepted accounting principles of the exporting country (or the producing country, where appropriate) and reasonably reflect the costs associated with the production and sale of the merchandise.'' Flores Colon amortized its capitalized expenses over a period that is longer than the expected useful lives of the capitalized assets. This method of accounting results in assigning costs which should be recognized during the POR to future periods. Thus, the company's accounting methodology regarding capitalized expenses does not appropriately match those expenses with income generated from their use and, hence, does not reasonably reflect the costs associated with the production of the merchandise under review.

Based on information gathered at verification, we have estimated the various types and corresponding amounts of expenses capitalized by Flores Colon from 1993 through 1995. We then amortized each expense category (adjusted for inflation) over a period consistent with the asset's expected useful life (e.g., two years for cuttings). This approach attempts to correct the distortion caused by the manner in which Flores Colon maintains its accounting records without penalizing the company for its unique accounting system.

HOSA

In the company's original questionnaire response, HOSA calculated its per unit constructed value using sales of both export and national quality flowers. We asked HOSA to recalculate its constructed value deriving per unit costs based solely on sales of export quality flowers, in accordance with our long standing practice in these reviews. While HOSA complied with the Department's request, it objected strongly to this methodology.

HOSA and Asocolflores raised the same objections in *Flowers 1991–94*. We disagreed on the grounds that there was no change in the factual situation which would significantly alter our established treatment of cull, or national-quality, flowers. Based on the information provided in the current review, we are continuing to treat all home market sales of non-export quality flowers as culls, regardless of how they are designated under HOSA's internal grading system. Therefore, we are using the most recent data submitted by HOSA in which CV is calculated on the basis of sales of export quality flowers.

Currency Conversion

For purposes of the preliminary results, we made currency conversions based on the official exchange rates in effect on the dates of the U.S. sales as certified by the Federal Reserve Bank of New York. Section 773 A(a) of the Act directs the Department to use a daily exchange rate in order to convert foreign currencies into U.S. dollars, unless the daily rate involves a fluctuation. In accordance with the Department's practice, we have determined as a general matter that a fluctuation exists when the daily exchange rate differs from a benchmark by 2.25 percent. The benchmark is defined as the rolling average of rates for the past 40 business days. When we determine that a fluctuation exists, we substitute the benchmark for the daily rate.

Preliminary Results of Review

As a result of our comparison of EP and CEP with NV, we preliminarily determine that there are margins in the amounts listed below for the period March 1, 1995 through February 29, 1996.

Selected Respondents

The following 13 groups of firms (composed of 97 companies) were selected as respondents and received individual reviews, as indicated below:

Agrodex Group	3.06 percent.
Agricola de las Mercedes	
Agricola el Retiro Ltda.	
Agrodex Ltda.	
Degaflores Ltda.	
Flores Camino Real Ltda.	
Flores Cuatro Esquinas Ltda.	
Flores de la Comuna Ltda.	
Flores de las Mercedes	
Flores de Los Amigos Ltda.	
Flores de los Arrayanes Ltda.	
Flores De Mayo Ltda.	
Flores del Gallinero Ltda.	
Flores del Potrero Ltda.	
Flores dos Hectareas Ltda.	
Flores de Pueblo Viejo Ltda.	
Flores el Trentino Ltda.	
Flores la Conejera Ltda.	
Flores Manare Ltda.	
Florlinda Ltda.	
Horticola el Triunfo	
Horticola Montecarlo Ltda.	
Caicedo Group	25.58 percent.
Agro Bosque S.A.	
Andalucia S.A.	
Aranjuez S.A.	
Columbiano S.A. ''CAICO''	
Caico	
Exportaciones Bochica S.A.	
Floral Ltda.	
Flores del Cauca	
Inversiones Targa Ltda.	
Productos el Zorro	
Via el Rosal	
Claveles Colombianos Group	1.13 percent.

Claveles Colombianos Ltda.	
Elegant Flowers Ltda.	
Fantasia Flowers Ltda.	
Splendid Flowers Ltda.	
Sun Flowers Ltda.	
Cultivos Miramonte Group	2.30 percent.
Cultivos Miramonte S.A.	
Flores Mocari S.A.	
Floraterra Group	7.85 percent.
Exporosas	
Floraterra S.A.	
Flores Casablanca S.A.	
Flores San Mateo S.A.	
Siete Flores S.A.	
Flores Colon Ltda.	4.46 percent.
Florex Group	1.07 percent.
Agricola Guacari S.A.	
Agricola el Castillo	
Flores San Joaquin	
Flores Altamira S.A.	
Flores de Exportacion S.A.	
Guacatay Group	3.23 percent.
Agricola Cunday	
Agricola Guacatay S.A.	
Jardines Bacata Ltda.	
Hosa Group	3.02 percent.
Horticultura de la Sabana S.A.	
HOSA Ltda.	
Innovacion Andina S.A.	
Minispray S.A.	
Prohosa Ltda.	
Maxima Farms Group	4.41 percent.
Agricola los Arboles S.A.	
Colombian D.C. Flowers	
Polo Flowers	
Rainbow Flowers	
Maxima Farms Inc.	
Queens Flowers Group	2.15 percent.
Agroindustrial del Rio Frio	
Cultivos General Ltda.	
Flora Nova	
Flora Atlas Ltda.	
Flores Calima S.A.	
Flores Canelon Ltda.	
Flores de Bojaca	
Flores del Cacique	
Flores del Hato	
Flores el Aljibe Ltda.	
Flores el Cipres	
Flores El Pino Ltda.	
Flores El Roble S.A.	
Flores el Tandil	
Flores la Mana	
Flores las Acacias Ltda.	
Flores la Valvanera Ltda.	
Flores Jayvana	
Flores Ubate Ltda.	
Jardines de Chia Ltda.	
Jardines Fredonia Ltda.	
Jardines Piracanta	
M.G. Consultores Ltda.	
Mountain Roses	
Queens Flowers de Colombia Ltda.	
Quality Flowers S.A.	
Florval S.A. (Floval)	
Jardines des Rosal	
Tinzuque Group	0.99 percent.
Tinzuque Ltda.	
Catu S.A.	
Tuchany Group	6.37 percent.
Tuchany S.A.	
Flores Sibate	
Flores Tikaya	
Flores Munya	

Non-Selected Respondents

The following 144 companies (including 22 groups of companies) were not selected as respondents and will receive a rate of 2.93 percent:

Aga Group
- Agricola la Celestina
- Agricola la Maria
- Agricola Benilda Ltda.

Agricola Acevedo Ltda.
Agricola Arenales Ltda.
Agricola Bonanza Ltda.
Agricola Circasia Ltda.
Agricola el Cactus S.A.
Agricola el Mortino Ltda.
Agricola el Redil Ltda.
Agricola la Corsaria Ltda.
Agricola Las Cuadras Group
- Agricola las Cuadras Ltda.
- Flores de Hacaritama

Agricola Megaflor Ltda.
Agroindustrial Don Eusebio Ltda. Group
- Agroindustrial Don Eusebio Ltda.
- Celia Flowers
- Passion Flowers
- Primo Flowers
- Temptation Flowers

Andes Group
- Cultivos Buenavista Ltda.
- Flores de los Andes Ltda.
- Flores Horizonte Ltda.
- Inversiones Penas Blancas Ltda.

Aspen Gardens Ltda.
Astro Ltda.
Cantarrana Group
- Cantarrana Ltda.
- Agricola los Venados Ltda.

Cigarral Group
- Flores Cigarral
- Flores Tayrona

Claveles de los Alpes Ltda.
Colibri Flowers Ltda.
Combiflor
Cultiflores Ltda.
Cultivos Medellin Ltda.
Cultivos Tahami Ltda.
Daflor Ltda.
El Antelio S.A.
Envy Farms Group
- Envy Farms
- Flores Marandua Ltda.

Falcon Farms de Colombia S.A. (formerly Flores de Cajibio Ltda.)
Farm Fresh Flowers Group
- Agricola de la Fontana
- Flores de Hunza
- Flores Tibati
- Inversiones Cubivan

Floralex Ltda.
- Floralex Ltda.
- Flores el Puente Ltda.
- Agricola Los Gaques Ltda.

Floreales Group
- Floreales Ltda.
- Kimbaya

Florenal (Flores el Arenal) Ltda.
Flores Agromonte
Flores Ainsuca Ltda.
Flores Aurora Ltda.
Flores Carmel S.A.
Flores Comercial Bellavista Ltda.
Flores de Aposentos Ltda.
Flores de la Hacienda
Flores de la Montana
Flores de la Sabana S.A.
Flores de la Vega Ltda.
Flores de la Vereda
Flores de Serrezuela S.A.
Flores de Suba Ltda.
Flores del Lago Ltda.
Flores del Rio Group
- Agricola Cardenal S.A.
- Flores del Rio S.A.
- Indigo S.A.

Flores de Oriente
Flores el Molino S.A.
Flores el Talle Ltda.
Flores el Zorro Ltda.
Flores Fusu
Flores Gioconda
Flores Juanambu Ltda.
Flores la Fragrancia
Flores las Caicas
Flores los Sauces
Flores la Union/Gomez Arango & Cia. Group
- Santana

Flores Monserrate Ltda.
Flores Sagaro
Flores San Andres
Flores San Juan S.A.
Flores Santa Fe Ltda.
Flores Silvestres
Flores Tocarinda
Flores Tomine Ltda.
Flores Tropicales (Happy Candy) Group
- Flores Tropicales Ltda.

Happy Candy Ltda.
Mercedes Ltda.
Rosas Colombianos Ltda.
Floricola la Gaitana S.A.
Fresh Flowers
Funza Group
Flores Alborada
Flores de Funza S.A.
Flores del Bosque Ltda.
Flexport de Colombia
Grupo el Jardin
Agricola el Jardin Ltda.
La Marotte S.A.
Orquideas Acatayma Ltda.
Industrial Agricola
Ingro Ltda.
Inverpalmas
Inversiones Flores del Alto
Inversiones Morrosquillo
Inversiones Santa Rita Ltda.
Inversiones Santa Rosa ARW Ltda.
Inversiones Supala S.A.
La Plazoleta Ltda.
Las Amalias Group
Las Amalias S.A.
Pompones Ltda.
La Fleurette de Colombia Ltda.
Ramiflora Ltda.
Linda Colombiana Ltda.
Los Geranios Ltda.
Manjui Ltda.
Monteverde Ltda.
Natuflora Ltda./San Martin Bloque B
Papagayo Group
Agricola Papagayo Ltda.
Inversiones Calypso S.A.
Petalos de Colombia Ltda.
Pisochago Ltda.
Rosas Sabanilla Group
Flores la Colmena Ltda.
Rosas Sabanilla Ltda.
Inversiones la Serena
Agricola la Capilla
Santana Flowers Group
Santana Flowers Ltda.
Hacienda Curibital Ltda.
Inversiones Istra Ltda.
Santa Rosa Group
Flores Santa Rosa Ltda.
Floricola la Ramada Ltda.
Agropecuaria Sierra Loma
Senda Brava Ltda.
Shasta Flowers y Compania Ltda.
Soagro Group
Flores Aguaclara Ltda.
Flores del Monte Ltda.
Flores la Estancia
Jaramillo y Daza
Toto Flowers Group
Flores de Suesca S.A.
Toto Flowers
Uniflor Ltda.
Velez de Monchaux Group
Velez De Monchaux e Hijos y Cia S. en C.
Agroteusa
Victoria Flowers
Vuelven Ltda.

No Shipments

The following 40 companies responded that they had no shipments during the POR. For those companies that were examined in a previous review, we will assess duties based on their company-specific rate from the most recent review. If we have not previously conducted a review of a company, duties equal to the ''all others'' rate of 3.53 percent from the Less-Than-Fair-Value (LTFV) investigation will be assessed.

Abaco Tulipanex de Colombia
Agricola Guali S.A.
Agricola Yuldama
Agrorosas
Agropecuria Cuernavaca Ltda.
De La Pava Guevara E Hijos Ltda.
Disagro
Expoflora Ltda.
Florandia Herrera Camacho & Cia.
Flores Acuarela S.A.
Flores Aguila
Flores Andinas Ltda.
Flores de Tenjo Ltda.
Flores del Campo Ltda.
Flores el Rosal Ltda.
Flores Galia Ltda.
Flores Gloria
Flores la Lucerna
Flores la Macarena
Flores Ramo Ltda.
Flores Sairam Ltda
Flores San Carlos
Flores Selectas
Flores Violette
Green Flowers
Inversiones Almer Ltda.
Inversiones Bucarelia
Inversiones Cota
Inversiones el Bambu Ltda.
Iturrama S.A.
Luisa Flowers
Otono (Agroindustrial Otono)
Planatas S.A.
Propagar Plantas S.A.
Rosaflor
Rosex Ltda.
Sansa Flowers
S.B. Talee de Colombia
Siempreviva
Tag Ltda

Unlocatable

The following 116 companies (including 2 groups) were unlocatable. For those unlocatable companies that were examined in a previous review, we will assess duties based on their company-specific rate from the most recent review. If we have not previously conducted a review of an unlocatable company, duties equal to the ''all others'' rate of 3.53 percent from the Less-Than-Fair-Value (LTFV) investigation will be assessed.

Achalay
Agricola Altiplano
Agricola del Monte
Agricola la Siberia
Agrocaribu Ltda.
Agro de Narino
Agroindustrias de Narino Ltda.
Agropecuaria la Marcela
Agropecuria Mauricio
Agrotabio Kent
Aguacarga
Alcala
Amoret
A.Q.
Carcol Ltda.
Classic
Coexflor
Color Explosion
Cota
Crest D'or
Crop S.A.
Cypress Valley
Degaflor
Del Monte
Del Tropico Ltda.
Diveragricola
El Milaro
El Timbul Ltda.
Exotic Flowers
Exotico
Ferson Trading
Flamingo Flowers
Flor Colombiana S.A.
Flores Ainsus
Flores Alcala Ltda.
Flores Calichana
Flores Corola
Flores de Iztari
Flores de Memecon/Corinto
Flores del Cielo Ltda.
Flores del Cortijo
Flores Gicro Group
Flores Gicro Ltda.
Flores de Colombia
Flores Hacienda Bejucol
Flores la Cabanuela
Flores la Pampa
Flores las Mesitas
Flores Montecarlo
Flores Palimana
Flores S.A.
Flores Saint Valentine
Flores San Andres
Flores Santana
Flores Sausalito
Flores Sindamanoi
Flores Tenerife Ltda
Floricola
Florisol
Florpacifico
Four Seasons
Fracolsa
F. Salazar
Garden and Flowers Ltda.
German Ocampo
Granja
Gypso Flowers
Hacienda la Embarrada
Hacienda Matute
Hana/Hisa Group
Flores Hana Ichi de Colombia Ltda.
Flores Tokai Hisa
Hernando Monroy
Horticultura de la Sasan
Industrial Terwengel Ltda.
Inversiones Maya, Ltda.
Inversiones Silma
Inversiones Sima
Jardin de Carolina
Jardines Choconta
Jardines Darpu
Jardines Natalia Ltda.
Jardines Tocarema
J.M. Torres
Kingdom S.A.
La Colina
La Embairada
La Flores Ltda.
La Floresta

L.H.
Loma Linda
Loreana Flowers
Luisiana Farms
M. Alejandra
Mauricio Uribe
Merastec
Morcoto
Nasino
Olga Rincon
Piracania
Prismaflor
Reme Salamanca
Rosa Bella
Rosas y Jardines
Rose
San Valentine
Sarena
Select Pro
Shila
Solor Flores Ltda.
Starlight
Susca
Sweet Farms
The Beall Company
The Rose
Tomino
Villa Diana
Zipa Flowers

Non-Respondents

The following 68 companies (including 2 groups of companies) did not respond to our questionnaire, or responded after the deadline date without explanation. We will assess duties based on the highest rate for any company from this or any prior segment of this proceeding. This rate is 76.60 percent.

Agrex de Oriente
Agricola de Occident
Agroindustrial Madonna S.A.
Alstroflores Ltda.
Ancas Ltda.
Arboles Azules Ltda.
Becerra Castellanos y Cia.
Bojaca Group
  Agricola Bojaca
  Universal Flowers
  Flores y Plantas Tropicales
  Flores del Neusa Nove Ltda.
  Tropiflora
Cienfuegos Group
  Cienfuegos Ltda.
  Flores la Conchita
Clavelez
Consorcio Agroindustrial
Cultivos Guameru
Dianticola Colombiana Ltda.
Dynasty Roses Ltda.
Elite Flowers (The Elite Flower/Rosen Tantau)
El Tambo
Euroflora
Exoticas
Exportadora
Flor y Color
Flora Intercontinental
Flores Abaco S.A.
Flores Bachue Ltda.
Flores Cerezangos
Flores Depina S.A.
Flores de Guasca
Flores de la Cuesta
Flores de la Maria
Flores del Tambo
Flores de la Parcelita
Flores el Lobo
Flores el Salitre Ltda.
Flores Flamingo Ltda.
Flores Juncalito Ltda.
Flores Monteverde
Flores Suasuque
Flores Tiba S.A.
Flores Urimaco
Florexpo
Florimex Colombia Ltda.
Flowers of the World/Rosa
Horticultura el Molino
Illusion Flowers
Industria Santa Clara
Inversiones Morcote
Inversiones Playa
Inversiones y Producciones Tecnicas
Inversiones Valley Flowers Ltda.
Jardines de America
Jardines de Timana
Karla Flowers
Las Flores
Laura Flowers
Pinar Guameru
Plantaciones Delta Ltda.
Rosales de Colombia Ltda.
Rosales de Suba Ltda.
Roselandia
San Ernesto
Santa Helena S.A.
Superflora Ltda.
Tropical Garden
Villa Cultivos Ltda.

Bankrupt Companies

The following group of companies is preliminarily determined to be bankrupt and will be assessed at a rate of 7.85 percent.

Oro Verde Group
  Inversiones Miraflores S.A.
  Inversiones Oro Verde S.A.

Parties to the proceeding may request disclosure within five days of publication of this notice. Interested parties may request a hearing not later than ten days after publication of this notice. Interested parties may submit written arguments in case briefs on these preliminary results within 45 days of the date of publication of this notice. Rebuttal briefs, limited to issues raised in case briefs, may be filed no later than five days after the time limit for filing case briefs. Any hearing, if requested, will be held two days after the scheduled date for submission of rebuttal briefs. Copies of case briefs and rebuttal briefs must be served on interested parties in accordance with 19 CFR 353.38(e).

The Department will publish the final results of this administrative review, including the results of its analysis of issues raised in any case or rebuttal brief or at a hearing. The Department will issue final results of this review within 120 days of publication of these preliminary results.

Upon completion of the final results in this review, the Department shall determine, and the U.S. Customs Service shall assess, antidumping duties on all appropriate entries. We have calculated importer-specific *ad valorem* antidumping duty rates based on the ratio of the total amount of antidumping duties calculated for the examined sales made during the POR to the total customs value of the sales used to calculate those duties. This rate will be assessed uniformly on all entries of that particular importer made during the POR. (This method for calculating the antidumping duty rate to be applied to each importer is equivalent to dividing the total amount of antidumping duties, which are calculated by taking the difference between statutory NV and statutory EP or CEP, by the total statutory EP or CEP value of the sales compared, and adjusting the result by the average difference between EP or CEP and customs value for all merchandise examined during the POR. Individual differences between EP or CEP and NV may vary from the percentages stated above.)

The Department will issue appraisement instructions on each exporter directly to the Customs Service.

Furthermore, the following deposit requirements will be effective for all shipments of the subject merchandise entered, or withdrawn from warehouse, for consumption on or after the publication date of the final results of this administrative review, as provided for by section 751(a)(1) of the Act: (1) The cash deposit rates for the reviewed companies will be those rates established in the final results of this review; (2) for previously reviewed or investigated companies not listed above, the cash deposit rate will continue to be the company-specific rate published for the most recent period; (3) if the exporter is not a firm covered in this review, a prior review, or the original LTFV investigation, but the manufacturer is, the cash deposit rate will be the rate established for the most recent period for the manufacturer of the merchandise; and (4) for all other producers and/or exporters of this merchandise, the cash deposit rate shall be 3.10 percent, the adjusted ''all others'' rate from the LTFV investigation. These deposit requirements, when imposed, shall remain in effect until publication of the final results of the next administrative review.

This notice also serves as a preliminary reminder to importers of their responsibility under 19 CFR 353.26 to file a certificate regarding the

reimbursement of antidumping duties prior to liquidation of the relevant entries during this review period. Failure to comply with this requirement could result in the Secretary's presumption that reimbursement of antidumping duties occurred and the subsequent assessment of double antidumping duties.

This administrative review and notice are in accordance with section 751(a)(1) of the Act (19 U.S.C. 1675(a)(1)) and 19 CFR 353.22(c)(5).

Dated: March 31, 1997.

Robert S. LaRussa,

Acting Assistant Secretary for Import Administration.

[FR Doc. 97–8958 Filed 4–7–97; 8:45 am]

BILLING CODE 3510–DS–P

DEPARTMENT OF COMMERCE

International Trade Administration

[A–588–046]

Polychloroprene Rubber From Japan; Termination of Antidumping Administrative Review

AGENCY: Import Administration, International Trade Administration, Department of Commerce.

ACTION: Notice of Termination of Antidumping Duty Administrative Review.

SUMMARY: In response to a request from the petitioner, E.I. Du Pont de Nemours & Company, Inc. (Du Pont), the Department of Commerce (the Department) published in the **Federal Register** (62 FR 2647, January 17, 1997) the notice of initiation of administrative review of the antidumping duty order on polychloroprene rubber from Japan with respect to Denki Kagujo K.K. (Denki), Denki/Hoei Sangyo Co. Ltd. (Denki/Hoei Sangyo), Mitsui Bussan, Showa Neoprene K.K. (Showa), Showa/Hoei Sangyo Co. Ltd. (Showa/Hoei Sangyo), Suzugo Corporation (Suzugo), Tosoh (formerly Toyo Soda) Corporation (Tosoh), and Tosoh/Hoei Sangyo Co., Ltd. (Tosoh/Hoei Sangyo), for the period December 1, 1995, through November 30, 1996. We received a request for withdrawal of this review from Du Pont on February 5, 1997. Because this request was timely submitted and because no other interested parties requested a review of these manufacturers/exporters, we are terminating this review. Unless otherwise indicated, all citations to the statute and to the Department's regulations are references to the provisions as they existed after January 1, 1995.

EFFECTIVE DATE: April 8, 1997.

FOR FURTHER INFORMATION CONTACT: Justin S. Jee, or Thomas F. Futtner, Import Administration, International Trade Administration, U.S. Department of Commerce, 14th Street and Constitution Avenue, N.W., Washington, D.C. 20230; telephone (202) 482–2657 or 482–3814.

SUPPLEMENTARY INFORMATION:

Background

On December 6, 1973, the Department of the Treasury published in the **Federal Register** (38 FR 35393) the antidumping finding on polychloroprene rubber (rubber) from Japan. On December 3, 1996, the Department published a notice of ''Opportunity to Request Administrative Review'' (61 FR 64050). On December 26, 1996, the petitioner, E.I. Du Pont de Nemours & Company, Inc. (Du Pont), requested that we conduct an administrative review for the period December 1, 1995, through November 30, 1996, covering eight producers and/or exporters: Denki Kagujo (Denki), Denki/Hoei Sangyo Co., Ltd. (Denki/Hoei Sangyo), Mitsui Bussan, Showa Neoprene K.K. (Showa), Showa/Hoei Sangyo Co., Ltd. (Showa/Hoei Sangyo), Suzugo Corporation (Suzugo), Tosoh (formerly Toyo Soda) Corporation (Tosoh), and Tosoh/Hoei Sangyo Co., Ltd. (Tosoh/Hoei Sangyo).

We published a notice of initiation of the antidumping administrative review on these companies on January 17, 1997 (62 FR 2647). On February 5, 1997, we received a withdrawal of request for review from Du Pont.

Pursuant to 19 CFR 353.22(a)(5) of the Department's regulations, the Department may allow a party that requests an administrative review to withdraw such request not later than 90 days after the date of publication of the notice of initiation of the administrative review.

Because Du Pont's request for termination was submitted within the 90 day time limit and there were no requests for review from other interested parties, we are terminating this review.

This notice is published in accordance with 19 CFR 353.22(a)(5).

Dated: April 1, 1997.

Jeffrey P. Bialos,

Principal Deputy Assistant Secretary for Import Administration.

[FR Doc. 97–8957 Filed 4–7–97; 8:45 am]

BILLING CODE 3510–DS–M

DEPARTMENT OF COMMERCE

International Trade Administration

[C–489–502]

Certain Welded Carbon Steel Pipes and Tubes and Welded Carbon Steel Line Pipe From Turkey; Preliminary Results of Countervailing Duty Administrative Reviews

AGENCY: Import Administration, International Trade Administration, Department of Commerce.

ACTION: Notice of preliminary results of countervailing duty administrative reviews.

SUMMARY: The Department of Commerce (''the Department'') is conducting administrative reviews of the countervailing duty orders on certain welded carbon steel pipes and tubes and welded carbon steel line pipe from Turkey. For information on the net subsidy for each reviewed company for each class or kind of merchandise, as well as for all non-reviewed companies, see the *Preliminary Results of Reviews* section of this notice. If the final results remain the same as these preliminary results of administrative reviews, we will instruct the U.S. Customs Service to access countervailing duties as detailed in the *Preliminary Results of Reviews* section of this notice. Interested parties are invited to comment on these preliminary results. (See *Public Comment* section of this notice.)

EFFECTIVE DATE: April 8, 1997.

FOR FURTHER INFORMATION CONTACT: Stephanie Moore or Cameron Cardozo, Office of Countervailing Duty/Antidumping Enforcement VI, Import Administration, International Trade Administration, U.S. Department of Commerce, 14th Street and Constitution Avenue, NW., Washington, DC 20230; telephone (202) 482–2849 or (202) 482–2786.

SUPPLEMENTARY INFORMATION:

Background

On March 7, 1986, the Department published in the **Federal Register** (51 FR 7984) the countervailing duty orders on certain welded carbon steel pipes and tubes (pipe and tube) and certain welded carbon steel line pipe (line pipe) from Turkey. On March 4, 1996, the Department published a notice of ''Opportunity to Request Administrative Review'' (61 FR 8238) of these countervailing duty orders. We received timely requests for reviews, and we initiated the reviews, covering the period January 1, 1995 through December 31, 1995, on April 25, 1996 (61 FR 18378).

In accordance with 19 CFR 355.22(a), the review on pipe and tube covers Erciyas Boru Sanayii ve Ticaret A.S. (Erbosan), a pipe and tube producer and exporter, who specifically requested the review. The review on line pipe covers Mannesmann-Sumerbank Boru Endustrisi T.A.S. (Mannesmann), a line pipe producer and exporter, who specifically requested the review. These reviews also cover 28 programs.

On November 6, 1996, we extended the period for completion of the preliminary results pursuant to section 751(a)(3) of the Tariff Act of 1930, as amended. We extended the preliminary results to no later than March 31, 1997 (see 61 FR 57398). The final results will be issued no later than 120 days from the date on which the preliminary results are published.

Applicable Statute

Unless otherwise indicated, all citations to the statute are references to the provisions of the Tariff Act of 1930, as amended by the Uruguay Round Agreements Act (''URAA'') effective January 1, 1995 (the Act). The Department is conducting this administrative review in accordance with section 751(a) of the Act.

Scope of Reviews

Imports covered by these reviews are shipments from Turkey of two classes or kinds of merchandise: (1) Certain welded carbon steel pipe and tube, having an outside diameter of 0.375 inch or more, but not over 16 inches, of any wall thickness. These products, commonly referred to in the industry as standard pipe and tube or structural tubing, are produced to various American Society for Testing and Materials (ASTM) specifications, most notably A–53, A–120, A–135, A–500, or A–501; and (2) certain welded carbon steel line pipe with an outside diameter of 0.375 inch or more, but not over 16 inches, and with a wall thickness of not less than .065 inch. These products are produced to various American Petroleum Institute (API) specifications for line pipe, most notably API–L or API–LX. These products are classifiable under the harmonized Tariff Schedule of the United States (HTSUS) item numbers 7306.30.10 and 7306.30.50. The HTSUS item numbers are provided for convenience and Customs purposes. The written description remains dispositive.

Verification

As provided in section 782(i) of the Act, we verified information submitted by the Government of Turkey (GOT), Erbosan, and Mannesmann, We followed standard verification procedures, including meeting with government and company officials and examination of relevant accounting and financial records and other original source documents. Our verification results dated March 17 and March 25, 1997, are outlined in the public versions of the verification reports, which are on file in the Central Records Unit (CRU) (Room B–099 of the Main Commerce Building).

Analysis of Programs

I. Programs Conferring Subsidies

A. Programs Previously Determined To Confer Subsidies

1. Pre-Shipment Export Credit. The Export Credit Bank of Turkey (Turk Eximbank) provides short-term pre-shipment export loans to exporters through intermediary commercial banks. The program is designed to support export-related industries from the initial stage of production. Loans are made to exporters who commit to export within a specified period of time. Generally, loans are extended for 120 days for industrial goods and cover 50 to 75 percent of the FOB export value. During the period of review (POR), both companies under review were eligible for pre-shipment export loans amounting to 50 percent of the FOB value of exports, for a maximum of 120 days. These loans are denominated in Turkish Lira (TL) and repaid in TL. The interest rate charged on these pre-shipment loans is established by Turk Eximbank and is tied to the Central Bank's rediscount rate.

In the Final Affirmative Countervailing Duty Determination: Certain Pasta from Turkey 61 FR 30366 (June 14, 1996) (Pasta), the Department found this program specific and, therefore, countervailable because receipt of the loans is contingent upon export performance and the interest rate paid on these loans is less than the amount the recipient would pay on a comparable commercial loan. In Pasta, we found that these loans were tied to specific destinations; however, in these reviews, we find these loans to be untied. Although an exporter files a loan application in which the export destination is listed, we verified that the actual destination of the shipments may be different from the one(s) stated in the loan application. The exporter has to only show that an export has taken place, and provide the foreign currency exchange receipts from the commercial bank to close out the loan with Turk Eximbank. Because the loans are not specifically tied to a particular destination at the time of approval, we preliminarily determine that the pre-shipment loan program is an untied export loan program. For further discussion, see the GOT and the company Verification Reports (Public Versions) dated March 17 and March 25, 1997, which are on file in the CRU.

Section 771(5)(E)(ii) of the Act states that, in the case of a loan, if there is a difference between the amount the recipient of the loan pays on the loan and the amount the recipient would pay on a comparable commercial loan that the recipient could actually obtain on the market, then a countervailable benefit is bestowed. In this case, as the benchmark interest rates, we are using company-specific interest rates on comparable commercial loans to calculate the benefit for any pre-shipment loans that were taken out by Erbosan or Mannesmann in 1994 and repaid in 1995, and any pre-shipment loans that were taken out in 1995 and repaid in 1995. (See company Verification Reports). Because the Department considers Turkey to be hyper-inflationary based on a Consumer Price Index rate of approximately 67 percent during the POR. (see Pasta at page 30367; see, also, Preliminary Results of Antidumping Duty Administrative Review: Gray Portland Cement and Clinker from Mexico, 61 FR 51676, 51681 (October 3, 1996)), we also preliminarily determine that it is appropriate to use monthly average short-term interest rates. Where monthly company-specific interest rates for Erbosan or Mannesmann are unavailable, we have used the monthly average interest rates charged by a commercial bank in Turkey on domestic TL loans. See commercial bank Verification Report (Public Version) on file in CRU. Using these benchmarks, we continue to find these pre-shipment export loans countervailable because the interest rate charged is less than the rate for comparable commercial loans that the company could actually obtain in the market.

Government Resolution Number: 94/5782, Article 4, effective June 13, 1994, allows for the exemption of certain fees that are normally charged on loans provided that the loans are used in financing exportation and other foreign exchange earning activities. For pre-shipment loans, which are denominated in TL, the fees that are exempted are the Bank and Insurance and Services Tax (BIST) of 5 percent of the interest rate, and the Resource Utilization Support Fund (RUSF) fee of 6 percent of the interest rate. The Department's current practice is normally to compare effective interest rates rather than nominal rates. The ''effective'' interest

rates are intended to take account of the actual cost of the loan, including the amount of any fees, commissions, compensating balances, government charges or penalties paid in addition to the ''nominal'' interest rate. Therefore, we have added the exempted customary banking fees to the commercial bank's benchmark interest rates. See e.g., Certain Iron-Metal Castings from India: Final Results of Countervailing Duty Administrative Review, 60 FR 44843 (August 29, 1995) (Castings).

To determine the benefit, we calculated the countervailable subsidy as the difference between actual interest paid on pre-shipment loans during the POR and the interest that would have been paid using the benchmark interest rates plus the customary banking fees. This difference was divided by the company's total export sales during the POR. On this basis, we preliminarily determine the countervailable subsidy to be 1.77 percent ad valorem for Erbosan, the pipe and tube producer, and 0.73 percent ad valorem for Mannesmann, the line pipe producer.

B. Other Programs Preliminarily Determined To Confer Subsidies

1. Investment Allowance. The General Incentives Program (GIP) is designed to increase investment in Turkey and to expand the Turkish economy. Under the GIP, companies may apply to the Undersecretariat of Treasury (UT) for investment incentive certificates. The investment incentive certificates entitle the holders to a number of specified benefits, such as investment allowances, related to an investment project. The investment allowance provides companies with a corporate tax exemption of between 30 percent and 100 percent of their total fixed investment depending upon the geographical location, sector and the value of the investment. During the POR, for purposes of GIP, Turkey was divided into four types of geographic regions: (1) Developed; (2) normal; (3) priority two; and (4) priority one. Companies located in first or second priority regions for development within Turkey, which are lesser-developed regions, are entitled to higher rates of deduction than companies located in the developed or normal regions.

Both companies were approved in 1994 for GIP investment certificates. They claimed an investment allowance on their corporate income tax returns filed during the POR. Erbosan, because it is located in a normal region, is eligible for an investment allowance of 40 percent, while Mannesmann, because it is located in a development region, is only eligible for the minimum investment allowance of 30 percent, which is the minimum investment allowance provided to all companies under GIP regardless of location or type of industry. See *e.g.*, Certain Welded Carbon Steel Pipe and Tube Products from Turkey; Preliminary Results of Countervailing Duty Administrative Review, 52 FR 47621, 47622 (December 15, 1987) and Certain Welded Carbon Steel Pipe and Tube Products from Turkey; Final Results of Countervailing Duty Administrative Review, 53 FR 9791 (March 25, 1988), Because the 30 percent investment tax is not limited to a specific enterprise or industry or group thereof, nor limited to companies located in specific regions, pursuant to section 771(5A)(D) we preliminarily determine that the 30 percent minimum investment allowance under GIP is not countervailable.

However, because the investment allowance of 40 percent received by Erbosan (designated for companies located in a normal region) is 10 percent higher than the minimum 30 percent allowance provided to all sectors and geographic regions within Turkey, the difference results in a higher tax savings to the company due to its geographic location. Therefore, we preliminarily determine that the provision of a higher investment allowance of 40 percent to certain regions is specific and, therefore, countervailable within the meaning of section 771(5A)D)(iv) of the Act. See also Industrial Phosphoric Acid from Israel; Preliminary Results of Countervailing Duty Administrative Reviews, 61 FR 8255, 8257 (March 4, 1996) and Industrial Phosphoric Acid from Israel; Final Results of Countervailing Duty Administrative Reviews, 61 FR 28841 (June 6, 1996).

We preliminarily determine that the benefits under the investment allowance program are ''recurring'' because once a company has a fixed asset investment project approved, it becomes eligible to deduct an investment allowance from its corporate income tax returns; therefore, the receipt of the benefit is automatic and continues year to year. To calculate the benefit for Erbosan, we first multiplied its total fixed investment by 10 percent, the amount Erbosan receives about the 30 percent allowance available throughout the country. We then computed the company's tax rate. The company paid four separate corporate taxes. These included a 25 percent corporate tax, an interim tax in the amount of 10 percent of the corporate tax, a ''stopaj'' tax equal to 10 percent of 75 percent of its net taxable income and a fund tax equal to 10 percent of the ''stopaj'' tax. The sum of these taxes equals a total corporate tax rate of 35.75 percent. We the multiplied the countervailable portion of the investment allowance deduction by the tax rate of 35.75 percent, and obtained the tax savings for the company. Next, we divided the tax savings by the company's total sales. On this basis, we preliminarily determine the countervailable subsidy to be 0.02 percent ad valorem for Erbosan, for pipe and tube.

2. Export Incentive Certificate Customs Duty and Other Tax Exemptions. Under Turkey's duty drawback program, companies are permitted to import spare parts free of customs duties and other taxes levied on imports used in the manufacture of goods to be exported. To obtain these benefits, companies must file a project application with the Undersecretariat for Foreign Trade (UFT) that describes the spare parts to be imported and the FOB value of the exports that they will be used to produce. The CIF value of the imported spare parts cannot exceed two percent of the FOB export commitment. On July 17, 1995, the program was changed to permit spare parts to be imported provided that the CIF value of the spare parts did not exceed 5 percent of the FOB export commitment. The UFT subsequently issues duty drawback certificates to the companies that describe the spare parts and instructed Customs that these items are to be free of duties. However, the companies must pay value added tax on the imports.

We preliminarily determine that this program is a subsidy and is specific within the meaning of section 771(5A)(B) of the Act, because eligibility for the program is contingent upon export performance and the spare parts imported under this program were utilized in machinery that produces, among other things, the subject merchandise. See *e.g.*, Ball Bearings and Parts Thereof from Thailand: Final Results of Countervailing Duty Administrative Review, 62 FR 728, 731 (January 6, 1997).

To calculate the benefit, we divided the total amount of duties and taxes exempted on spare parts imported during the POR for each company under review, by the total value of exports during the POR. On this basis, we preliminarily determine the benefit from this program to be 0.06 percent ad valorem for Erbosan for pipe and tube, and 0.02 percent ad valorem for Mannesmann for line pipe.

3. Foreign Exchange Loan Assistance. The GOT Resolution Number: 94/5782, Article 4, effective June 13, 1994 concerning the encouragement of exportation, allows commercial banks to exempt certain fees provided that the

loans are used in the financing of exportation and other foreign exchange earning activities. We preliminarily determine that this program is specific and, therefore, countervailable within the meaning of section 771(5A)(B) because the exemption of the fees is contingent upon export performance.

Both companies received and paid interest on foreign currency loans from commercial banks and were exempted from paying the customary BIST of 5 percent of the interest rate and the RUSF fee of 6 percent of the principal. Unlike pre-shipment loans that are denominated in TL where the RUSF fee is 6 percent of the interest rate, the RUSF fee for foreign currency loans is calculated as 6 percent of the principal. At verification, we found that Mannesmann's foreign currency loans were tied to destinations other than to the United States. We found that Erbosan's foreign currency loans were provided for both U.S. and non-U.S. shipments, and were not tied to a particular destination. For further discussion, see the companies' Verification Reports.

We preliminarily determine that these fee exemptions are a direct transfer of funds from the GOT providing a benefit in the amount of the exemption. (See discussion of the ''Pre-shipment Loans'' program above). See also, Castings at 44843. We also preliminarily determine that the benefits are recurring because once the company obtains a foreign currency loan it is automatically exempted from paying the fees. To calculate the benefit for this program, we computed the exempted fees on the interest or principal of Erbosan's foreign currency loans. These loans are dollar denominated. Therefore, we converted these exempted fee amounts to TL using the exchange rate in effect during the month in which the loans were repaid or interest paid, and divided the result by the company's total exports. On this basis, we preliminarily determine the net subsidy to be 1.14 percent ad valorem for Erbosan for pipe and tube.

4. Freight Program. The GOT Decree number 93/43, effective October 13, 1993, provided freight rebate payments to exporters in the amount of $50 per ton for merchandise exported on Turkish vessels, and $30 per ton for merchandise exported on non-Turkish vessels, capped at 10 percent of the FOB value of the goods. In February 1994, Decree number 94/4 raised the cap to 15 percent of the FOB value of the goods. Benefits under this program were provided in the form of 30 percent cash and 70 percent treasury bonds with a two-year maturity. Companies were eligible to receive interest on bonds on the one-year anniversary date of the issuance of the bonds and on the date of the maturity of the bonds. The program was terminated on December 31, 1994, and there will be no payments on shipments made after January 1, 1995.

We preliminarily determine that these export grants and bonds are countervailable export subsidies within the meaning of section 771(5A)(B) of the Act. The grants and bonds are a direct transfer of funds from the GOT providing a benefit in the amount of the cash grants and bonds. We further preliminarily determine that the benefits under the Freight Program are ''recurring.'' Once a company has exported and submitted documentation to the Central Bank it becomes eligible for the cash grants or bonds. The receipt of benefits is automatic and continued throughout the life of the program. (Pasta at page 30369). See also Allocation Section of the General Issues Appendix in Final Affirmative Countervailing Duty Determination: Certain Steel Products from Austria (58 FR 37217, 37268–69, July 9, 1993) (''General Issues Appendix'').

During the POR, Erbosan received cash and bonds under the freight rebate program based on exports made in 1994. The bonds were received by Erbosan on May 1, 1995 and mature on May 1, 1997; interest was payable on May 1, 1996 and on the date of maturity. During the POR, Mannesmann received cash and bonds for exports made in 1994, but we verified that the company did not receive any payments under the freight program during the POR for exports to the United States.

The Department's practice has been to deem the benefit to be received at the time of export countervailable if the benefit is calculated as a percentage of the FOB value and the amount of the benefit is known at the time of export. See *e.g.*, Castings at 44843. Although the benefit under the freight program is calculated based on tonnage and not the percent of exports, we note that a benefit determined by the amount of the tonnage may also be known at the time of export.

However, the facts in this case establish that the exporter did not know the amount of benefit at the time of export. Although the freight payments were stated in U.S. dollars per ton, the exporter received the benefit in TL. The exporter did not know at the time of export what exchange rate would be used to convert the dollar equivalent payments into TL. Given the high inflation rate in Turkey (based on a CPI rate of approximately 65 percent in 1993, and 114 percent in 1994), there was no way for the exporter to predict at the time of export what the dollar equivalent in TL would be. In February 1995, the GOT announced that it would convert the dollar amount of the freight payments using the exchange rate that was in effect on December 31, 1994. Thus, the exporter did not know the amount of the benefit at the time of export. See the GOT Verification Report (page 12). This position is consistent with the Department's analysis of a similar program in Pasta where we determined that the benefit should be treated as having been bestowed when the cash was received rather than earned. (See discussion of Payments for Exports on Turkish Ships program in Pasta at 30369). As such, we preliminarily determine that the benefits under this program are bestowed when the cash is received with respect to the cash payments, and not when the benefit is earned.

With regard to the bonds portion of the rebate, we preliminarily determine that the benefits from the bonds are bestowed on the date of maturity. This is due to the fact that, even though there were not restrictions on the sale or transfer of the bonds, because of the rate of inflation, there was no secondary market to allow exporters to convert their bonds to cash (*see* GOT, company, and commercial bank Verification Reports). Therefore, the exporters have no choice but to hold the bonds until maturity. (Pasta at page 30368).

The benefits under the freight program are made on a shipment-by-shipment basis. Because the benefits are shipment-specific, and we are able to segregate the shipments according to the country of destination, we preliminarily determine that they are tied to a particular destination. Therefore, where a benefit is tied or can be tied to exports to the United States, we calculate the ad valorem subsidy rate by dividing the benefit by the firm's total exports to the United States. See, *e.g.*, Notice of Final Results of Countervailing Duty Administrative Review: Roses and Other Cut Flowers from Columbia, 52 FR 48847, 48848 (December 28, 1987). We have preliminarily calculated Erbosan's benefit from this program by dividing the total amount of grants received for exports to the United States during the POR by Erbosan's total exports to the United States during the POR. On this basis, we preliminarily determine the net subsidy to be 1.02 percent ad valorem for Erbosan for pipe and tube.

5. Resource Utilization Support Premium. a. Program Description. Under the Resource Utilization Support Premium program (RUSP), a company can request benefits for a proposed

investment project, as well as other General Incentives Program (GIP) benefits, at the time it submits an application to the General Directorate of Incentive and Applications (GDIA) for an investment incentive certificate (see discussion of the ''Investment Allowance'' program above). If the GDIA approves the investment project described in the application, it will issue to the company an investment incentive certificate which lists the GIP benefits bestowed. During the POR, Erbosan received RUSP payments for an investment project related to the production of standard pipe and tube.

RUSP payments were given to companies to encourage them to use their own equity, rather than loans or credit, to finance their GIP investment project. The amount of the benefit is applied to that portion of the fixed investment which is financed by the investor's own resources. Erbosan is located in a region designated as a normal region by the GDIA. All companies located in normal regions are eligible for RUSP payments of 15 percent of their investment. Companies located in developed regions are not eligible for RUSP payments. Mannesmann is located in a developed region and is not eligible for RUSP payments, and we also verified that Mannesmann never received RUSP payments.

The RUSP was terminated in 1991, and GIP investment incentive certificates issued after 1991 were no longer eligible to receive RUSP payments. Erbosan's investment incentive certificate was issued in 1990 and expired on December 31, 1994. Erbosan received its RUSP benefits in 1994 in the form of treasury bonds with a maturity date in 1995. During the POR, Erbosan received the full amount of the face value of the bonds, plus interest.

Because RUSP assistance is provided by the GOT only to industries located within specifically designated geographical regions of Turkey—*i.e.*, in this case, the normal region—we preliminarily determine that this program provides a countervailable regional subsidy within the meaning of section 771(5A)(D)(iv).

b. Claim for ''Green Light'' Subsidy Treatment of RUSP. Section 771(5B) of the Act describes subsidies that are non-countervailable (''green light'' subsidies). Among these green light subsidies are subsidies to disadvantaged regions. The GOT requested that the RUSP program be considered non-countervailable under section 771(5B)(C) of the Act because the benefit is provided only to disadvantaged regions.

The RUSP program is one of many programs that distribute benefits on a regional basis under the umbrella of the General Incentives Program (GIP). Under GIP, provinces were categorized by the GOT into one of the following four types of development regions: developed; normal; priority two; and priority one according to their level of development. By offering an increasing level of benefits to lesser developed regions, regional assistance programs under GIP were designed not only to further development, particularly in the two priority regions, but also to reduce the disparities among the four regions. As stated in the Fifth Five Year Development Plan (1984–1989), the GOT's goal was to ''develop the Priority Development areas * * * and reduce and, in time, eradicate, the difference of development existing between these and other regions.'' (See Attachment 1 of January 21, 1997 GOT response.) The various economic incentive programs would complement other development activities such as housing and infrastructure projects.

According to the questionnaire responses, Turkish provinces are classified into these development regions based on the results of the Principal Component Analysis, an econometric model that generates a development coefficient based on the selected socioeconomic development variables. The State Planning Organization (SPO) conducts a Principal Component Analysis for every province and creates an index that ranks the provinces from most to least developed according to the development coefficients generated by the Principal Component Analysis.

Section 771(5B)(C) of the Act specifies the conditions that must be met for a program to qualify for green light status: it is part of a general regional development policy and each region is a clearly designated contiguous geographical area with a definable economic and administrative identity; the assistance is generally available; the assistance is not for regions suffering only temporary disadvantage; the eligibility criteria are clearly stated in law or an official document and capable of verification; and the eligibility criteria are neutral and objective, and include a measurement of economic development. The SAA states that the green light provision governing assistance for disadvantaged regions must be strictly construed and that the Department must determine that all of these statutory criteria have been satisfied. (See Statement of Administrative Action accompanying the URAA, reprinted in H.R. Doc. No. 316, 103d Cong., 2d Sess. 919 (1994)) (SAA).

In order to examine the criteria regarding economic development, section 771(5B)(C)(ii) of the Act instructs the Department to examine the respondent's measurement of economic development over a three-year period. Although it received benefits under this program during the POR, Erbosan was approved for receipt of these benefits in 1991. The Department's standard practice when analyzing the countervailability of programs is to examine data from the time period when the subsidy was approved. In this case, the RUSP was in effect from 1989–1991, and this time period serves as our three-year period for analysis.

In their January 29, 1997 questionnaire response, the GOT provided an excerpt from a 1991 SPO publication which listed the 53 economic and social variables used in the Principal Component Analysis to generate the socioeconomic development index that is the basis for the SPO's ranking of the provinces from most to least developed. The excerpt also included a list of 67 provinces ranked by the SPO from most to least developed. Respondents claimed that this list, originally published in a 1973 SPO publication, was still valid for the 1989–1991 period.

At verification, we requested to see documentation, such as the index generated by the Principal Component Analysis, the Principal Component Analysis for that period, or SPO publications or reports that supported the ranked list of 67 provinces described above and the classification of provinces into the four development regions during the relevant 1989–1991 period. Although respondents had supporting documentation for a 1996 Principal Component Analysis used to reexamine the regional designations, no supporting documentation was available for the Principal Component Analysis used to designate provinces into development regions during the applicable 1989–1991 period. According to respondents, the supporting documentation for that period was no longer available. For further discussion, see the GOT Verification Report (pages 10–11).

Using the limited information provided in the response and at verification, the team sought to examine whether the 1989–1991 Principal Component Analysis rankings (based on the list from the January 29, 1997 submission) corresponded with the provinces' regional designations for 1989–1991. The provinces were rank

ordered from first, most developed, to 67th, least developed. Presumably, the actual designations of the provinces—developed, normal, first priority, and second priority—should have closely followed the Principal Component Analysis index of economic development. However, the designation of provinces into development regions did not track closely to the Principal Component Analysis rankings. For example, Bilecik and Ordu provinces, respectively ranked at 52 and 58 (out of a possible 67) were listed as normal regions, while Zonguldak, ranked at 13, was listed as Priority One in 1990 and 1991. In addition, four provinces, Zonguldak, Erzincan, Artvin and Sanliurfa, were reclassified between 1989 and 1991 without any Principal Component Analysis being undertaken.

GOT officials accounted for these discrepancies by explaining that the Principal Component Analysis is not the only basis for determining a province's regional designation. The Principal Component Analysis is only one step (albeit the primary one) toward determining the regional designations. The final determination is made by the Council of Ministers, taking into account factors that cannot be enumerated by the Principal Component Analysis, including the promotion of other development policies and goals (*e.g.*, privatization,), the impacts upon, and relationships with, other regional and non-regional development policies and programs, and the Ministers experience in development issues and programs. (For a further discussion, see the GOT Verification Report (page 11).)

In order for a subsidy to be considered non-countervailable because it is provided in a disadvantaged region, section 771(5B)(C)(i)(II) of the Act states that ''[e]ach region is considered a disadvantaged region on the basis of neutral and objective criteria indicating that the region is disadvantaged * * *.'' On this basis, the RUSP assistance is not entitled to green light treatment. The information on the record indicates that the designations of disadvantaged regions do not correspond with an analysis based on neutral and objective criteria, purportedly the Principal Component Analysis. Rather, the GOT can make the final decisions regarding the designation of economic development regions based on criteria that are neither neutral nor objective. Since the SAA states that all of the green light criteria, listed above, must be met, we do not intend to analyze the GOT's compliance with the remaining criteria. As a result, benefits provided under the RUSP program do not qualify as non-countervailable green light subsidies. See *e.g.*, Preliminary Affirmative Countervailing Duty Determination; Certain Pasta from Italy, 60 FR 53739, 53742 (October 17, 1995) and Final Affirmative Countervailing Duty Determination: Certain Pasta from Italy, 61 FR 30288 (June 14, 1996).

c. Subsidy Calculation. Although Erbosan received the RUSP bonds in 1994, the cash flow was realized in 1995 when the principal and interest from the bonds were paid. We verified that there is no secondary market for the resale of treasury bonds in Turkey and, therefore, Erbosan could not realize a cash flow until 1995 (the POR) when the bonds reached maturity. See Erbosan Verification Report (page 7). We also preliminarily determine that the RUSP benefits are non-recurring because they are exceptional and the recipient cannot expect to receive benefits on an ongoing basis. However, because the amount received under this program is less than 0.50 percent of Erbosan's total sales, we are allocating the total benefit to the POR. See *e.g.*, Industrial Phosphoric Acid from Israel; Preliminary Results of Countervailing Duty Administrative Review, 61 FR 28845, 28847 (June 6, 1996) and Industrial Phosphoric Acid from Israel; Final Results of Countervailing Duty Administrative Review, 61 FR 53351 (October 11, 1996). We calculated the benefit for the POR by dividing the RUSP payments by Erbosan's total sales of subject merchandise during the POR. On this basis, we preliminarily determine the benefit from this program to be 0.05 percent ad valorem for the POR.

The GOT terminated the RUSP program in 1991 and GIP investment incentive certificates issued after 1991 were no longer eligible to receive RUSP payments. We verified that Erbosan has no investment incentive certificates that were issued before 1991 that are still valid. Therefore, we consider this program terminated with no residual benefits. The termination of RUSP constitutes a program-wide change; and because there are no residual benefits, the cash deposit rate for Erbosan will be adjusted to zero for this program. See *e.g.*, *Pasta*, 61 FR 30370.

II. Programs Preliminarily Determined To Be Not Used

We examined the following programs and preliminarily determine that the producers and/or exporters of the subject merchandise did not apply for or receive benefits under these programs during the period of review:

1. Resource Utilization Support Fund
2. State Aid for Exports Program
3. Advance Refunds of Tax Savings
4. Export Credit Through the Foreign Trade Corporate Companies Rediscount Credit Facility (Eximbank)
5. Past Performance Related Foreign Currency Export Loans (Eximbank)
6. Export Credit Insurance (Eximbank)
7. Subsidized Turkish Lira Credit Facilities
8. Subsidized Credit for Proportion of Fixed Expenditures
9. Fund Based Credit
10. Regional Subsidies
    a. Additional Refunds of VAT (VAT+10%)
    b. Postponement of VAT on Imported Goods
    c. Incentive Premium on Domestically Obtained Goods (Rebate of VAT on Domestically-Sourced Machinery and Equipment)
    d. Land Allocation (GIP)
    e. Taxes, Fees (Duties), Charge Exemption (GIP)

III. Programs Preliminarily Determined To Be Terminated

We preliminarily determine that the following programs have been terminated and there are no residual benefits:

1. Export Performance Credits

The Export Performance Credit program, which was administered by the Central Bank of Turkey, provided credits to manufacturers and exporters based on a percentage of the FOB value of their exports. The certificates were issued for shipments made between March 7, 1994 and December 31, 1994. It is the Department's practice in the case of an export benefit provided as a percentage of the value of the exported merchandise that the benefit is bestowed on the date of the export. See *e.g.*, *Castings* at 44843. Under this program, the exporters received the TL equivalent of a fixed percentage of their U.S. dollar exports. Although at the time of receipt, the exporters received more TL than at the time of export, the value of the TL amount remained the same in U.S. dollar terms. Therefore, we preliminarily determine that the benefit occurred at the time of export in 1994.

2. Deduction from Taxable Income for Export Revenues
3. Preferential Export Financing Under Decree 84/8861
4. Interest Spread Return Program (GIP)
5. Export Credits Under Communique No. 1
6. Corporate Tax Deferral
7. Payment of Certain Obligations of Firms Undertaking Large Investments
8. Subsidized Credit in Foreign Currency

Preliminary Results of Review

In accordance with 19 C.F.R. 355.22(c)(4)(ii), we calculated an individual subsidy rate for each producer/exporter subject to each administrative review. For the period January 1, 1995 through December 31, 1995, we preliminarily determine the net subsidy to be as follows:

Manufacturer/exporter of line pipe	Assessment rate (percent)
Mannesmann	0.75

Manufacturer/exporter of line pipe and tube	Assessment rate (percent)
Erbosan	4.06

If the final results of these reviews remain the same as these preliminary results, the Department intends to instruct the U.S. Customs Service (''Customs'') to assess countervailing duties as indicated above.

The Department also intends to instruct Customs to collect cash deposits of estimated countervailing duties as indicated below of the f.o.b. invoice price on all shipments of each class or kind of merchandise from reviewed companies, entered, or withdrawn from warehouse, for consumption on or after the date of publication of the final results of these reviews.

Manufacturer/exporter of line pipe	Cash deposit rate (percent)
Mannesmann	0.75

Manufacturer/exporter of pipe and tube	Cash deposit rate (percent)
Erbosan	4.01

Because the URAA replaced the general rule in favor of a country-wide rate with a general rule in favor of individual rates for investigated and reviewed companies, the procedures for establishing countervailing duty rates, including those for non-reviewed companies, are now essentially the same as those in antidumping cases, except as provided for in section 777A(e)(2)(B) of the Act. The requested review will normally cover only those companies specifically named. See 19 CFR section 355.22(a). Pursuant to 19 CFR 355.22(g), for all companies for which a review was *not* requested, duties must be assessed at the cash deposit rate, and cash deposits must continue to be collected, at the rate previously ordered. As such, the countervailing duty cash deposit rate applicable to a company can no longer change, except pursuant to a request for a review of that company. See *Federal-Mogul Corporation and The Torrington Company* v. *United States*, 822 F.Supp. 782 (CIT 1993) and *Floral Trade Council* v. *United States*, 822 F.Supp. 766 (CIT 1993) (interpreting 19 CFR 353.22(e), the antidumping regulation on automatic assessment, which is identical to 19 CFR section 355.22(g)). Therefore, the cash deposit rates for all companies except those covered by these reviews will be unchanged by the results of these reviews.

We will instruct Customs to continue to collect cash deposits for non-reviewed companies under each order at the most recent company-specific or country-wide rate applicable to the company under that order. Accordingly, the cash deposit rates that will be applied to non-reviewed companies covered by these orders are those established in the most recently completed administrative proceeding. See Certain Welded Carbon Steel Pipe and Tube Products from Turkey; Final Results of Countervailing Duty Administrative Review, 53 FR 9791. These rates shall apply to all non-reviewed companies until a review of a company assigned these rates is requested. In addition, for the period January 1, 1995 through December 31, 1995, the assessment rates applicable to all non-reviewed companies covered by these orders are the cash deposit rates in effect at the time of entry.

Public Comments

Parties to the proceeding may request disclosure of the calculation methodology and interested parties may request a hearing not later than 10 days after the date of publication of this notice. Interested parties may submit written arguments in case briefs on these preliminary results within 30 days of the date of publication. Rebuttal briefs, limited to arguments raised in case briefs, may be submitted seven days after the time limit for filing the case brief. Parties who submit argument in this proceeding are requested to submit with the argument (1) a statement of the issue and (2) a brief summary of the argument. Any hearing, if requested, will be held seven days after the scheduled date for submission of rebuttal briefs. Copies of case briefs and rebuttal briefs must be served on interested parties in accordance with 19 CFR 355.38.

Representatives of parties to the proceeding may request disclosure of proprietary information under administrative protective order no later than 10 days after the representative's client or employer becomes a party to the proceeding, but in no event later than the date the case briefs, under 19 CFR 355.38, are due. The Department will publish the final results of these administrative reviews, including the results of its analysis of issues raised in any case or rebuttal brief or at a hearing.

These administrative reviews and notice are in accordance with section 751(a)(1) of the Act (19 U.S.C. 1675(a)(1)).

Dated: March 31, 1997.

Robert S. LaRussa,

Acting Assistant Secretary for Import Administration.

[FR Doc. 97–8955 Filed 4–7–97; 8:45 am]

BILLING CODE 3510–DS–M

DEPARTMENT OF COMMERCE

National Institute of Standards and Technology

[Docket No. 970326070–7070–01]

RIN 0693–XX31

Notice of Termination of Validation Services for Federal Information Processing Standards (FIPS)

AGENCY: National Institute of Standards and Technology (NIST), Commerce.

ACTION: Notice; termination of validation services.

SUMMARY: The NIST is terminating validation services for: FIPS 127–2, Database Language SQL, and FIPS 128–2, Computer Graphics Metafile, Continuous Acquisition and Life-Cycle Support Profile (CGM (CALS)), and considering terminating validation services for FIPS 21–4, COBOL; FIPS 69–1, Fortran; FIPS 128–2, Computer Graphics Metafile, Air Transport Association Profile (CGM (ATA)); FIPS 151–2, POSIX; and FIPS 160, C. Comments are solicited.

NIST announced by Department Organization Order 30–2B the formation of the Information Technology Laboratory (ITL). Under the new ITL organization, NIST is refocusing its program for information technology, concentrating on the development of conformance tests for emerging information technologies rather than the operation of software testing services.

Therefore, the NIST is terminating validation services for FIPS 127–2, SQL, and FIPS 128–2, CGM (CALS), effective July 1, 1997. The NIST is considering terminating validation services for FIPS 21–4, COBOL; FIPS 69–1, Fortran; FIPS 128–2 CGM (ATA); FIPS 151–2, POSIX; and FIPS 160, C, effective September 30, 1997. Advance notice of this termination is given so that interested parties may establish testing services if they wish to do so. Federal, state, and local government agencies requiring validation of implementations for conformance to the above standards

may specify their own testing or adopt other techniques for evaluating conference to these specifications.

Information on the test methods and procedures for conformance testing are available in the Validated Products List (VPL) on the internet Universal Resource Locator (URL) address ftp://speckle.ncsl.nist.gov/vpl/intro.htm. NIST test suites and testing procedures are distributed freely via the World Wide Web (WWW) Universal Resource Locator (URL) http://www.nist.gov/div897/ctg.

DATES: The effective date for terminating validation services for FIPS 127–2, SQL, and FIPS 128–2, CGM (CALS), is July 1, 1997. Comments on terminating validation services for FIPS 21–4, COBOL; FIPS 69–1, Fortran; FIPS 128–2, CGM (ATA); FIPS 151–2, POSIX; and FIPS 160, C, must be received no later than May 8, 1997.

ADDRESSES: Written comments concerning the termination should be sent to: Director, Information Technology Laboratory, Attn: Validation Services, Building 820, Room 562, National Institute of Standards and Technology, Gaithersburg, MD 20899. Electronic comments should be sent to: fips.comments@nist.gov.

FOR FURTHER INFORMATION OR COMMENTS CONTACT:

Ms. Lynne Rosenthal, National Institute of Standards and Technology, Gaithersburg, MD 20899, telephone (301) 975–3283, email lsr@nist.gov.

Authority: Federal Information Processing Standards Publications (FIPS PUBS) are issued by the National Institute of Standards and Technology after approval by the Secretary of Commerce pursuant to Section 5131 of the Information Technology Management Reform Act of 1996, Public Law 104–106, and the Computer Security Act of 1987.

Elaine Bunten-Mines,

Director, Program Office.

[FR Doc. 97–8961 Filed 4–7–97; 8:45 am]

BILLING CODE 3510–CN–M

DEPARTMENT OF COMMERCE

National Oceanic and Atmospheric Administration

[I.D. 040197C]

Northern Right Whale Protection; Endangered and Threatened Marine Mammals

AGENCY: National Marine Fisheries Service (NMFS), National Oceanic and Atmospheric Administration (NOAA), Department of Commerce.

ACTION: Notice of petition and determination.

SUMMARY: On August 26, 1996, NMFS received a petition from Mr. Richard Max Strahan representing GreenWorld, Inc., requesting that NMFS and the U.S. Coast Guard undertake a variety of actions to protect and preserve marine wildlife and, in particular, the northern right whale (*Eubalaena glacialis*). The petition was amended on September 18, 1996.

NMFS has denied the petition from GreenWorld, Inc., because it does not contain substantial information indicating that the petitioned actions may be warranted.

FOR FURTHER INFORMATION CONTACT: Robert C. Ziobro, Protected Species Management Division, Office of Protected Resources, East-West Highway, Silver Spring, Maryland 20910 (301– 713–1401).

SUPPLEMENTARY INFORMATION: On August 26, 1996, NMFS received a notice of intent to bring suit under the Endangered Species Act (ESA) on a petition for proposed regulations from Mr. Strahan. On September 18, 1996, Mr. Strahan amended his original petition to add another provision to his list of requested actions. The notice and petition was addressed both to officials at NMFS and the U.S. Coast Guard.

The following is a brief summary of some of the primary elements of the petition and the request for relief in Mr. Strahan's letters that appear to be directed to NMFS, or to NMFS and the U.S. Coast Guard: Issue a letter to coastal state government agencies informing them that they are in violation of the ESA and must apply to NMFS for a section 10 permit or face U.S. Coast Guard enforcement action; issue an emergency rule followed by a permanent rule banning fixed fishing gear in right whale critical habitat; promulgate and enforce a rule banning all gillnets and aquaculture projects; promulgate a rule allowing other types of fishing gear in right whale critical habitat areas only pursuant to a section 10 incidental take permit and a small take authorization pursuant to section 101 of the Marine Mammal Protection Act (MMPA); and comply with the mandatory and non-discretionary duties imposed under section 7(a) of the ESA and utilize all statutory and regulatory authorities to adopt and implement a conservation plan to enforce the take prohibitions of the ESA and MMPA to stop marine fisheries licensed and regulated by States from incidentally taking northern right whales and other Federally protected whales taken incidententally in State fishery activities along the Atlantic and Pacific Coastlines of the U.S.

NMFS has evaluated the petition and request for relief and determined that they do not contain substantial information that the requested actions may be warranted. NMFS notes, however, that efforts are underway to reduce incidental takes in commercial fisheries, including State regulated fisheries, under section 118 of the MMPA. For example, a large whale take reduction team was formed and notice thereof published in the **Federal Register** on August 6, 1996 (61 FR 40819) to address incidental takings of certain large whale species that occur or may occur in several fisheries. NMFS filed a proposed Large Whale Take Reduction Plan at the Federal Register on April 1, 1997, and Mr. Strahan and others are invited to comment on that plan.

Dated: April 1, 1997.

Charles Karnella,

Acting Assistant Administrator for Fisheries, National Marine Fisheries Service.

[FR Doc. 97–8860 Filed 4–7–97; 8:45 am]

BILLING CODE 3510–22–F

DEPARTMENT OF COMMERCE

National Oceanic and Atmospheric Administration

[I.D. 040297D]

Endangered Species; Permits

AGENCY: National Marine Fisheries Service (NMFS), National Oceanic and Atmospheric Administration (NOAA), Commerce.

ACTION: Receipt of four applications for scientific research permits (P772#71, P639, P640, P641).

SUMMARY: Notice is hereby given that the Southwest Fisheries Science Center, Tiburon Laboratory, NMFS at Tiburon, CA (SWFSC); Point Reyes National Seashore and Golden Gate National Recreation Area, National Park Service at San Francisco, CA (PR/GG); the Marin Municipal Water District at Corte Madera, CA (MMWD); and the Sonoma County Water Agency at Santa Rosa, CA (SCWA) have applied in due form for permits authorizing takes of a threatened species for scientific research purposes.

DATES: Written comments or requests for a public hearing on any of these applications must be received on or before May 8, 1997.

ADDRESSES: The applications and related documents are available for

review in the following offices, by appointment:

Office of Protected Resources, F/PR3, NMFS, 1315 East-West Highway, Silver Spring, MD 20910–3226 (301–713–1401); and

Protected Species Division, NMFS, 777 Sonoma Avenue, Room 325, Santa Rosa, CA 95404–6528 (707–575–6066).

Written comments or requests for a public hearing should be submitted to the Protected Species Division in Santa Rosa, CA.

SUPPLEMENTARY INFORMATION: SWFSC, PR/GG, MMWD, and SCWA request permits under the authority of section 10 of the Endangered Species Act of 1973 (ESA) (16 U.S.C. 1531–1543) and the NMFS regulations governing ESA-listed fish and wildlife permits (50 CFR parts 217–227).

SWFSC (P772#71) requests a 5-year permit for takes of adult and juvenile, threatened, central California coast coho salmon (*Oncorhynchus kisutch*) associated with fish population and habitat studies throughout the Evolutionarily Significant Unit. The studies consist of five assessment tasks for which ESA-listed fish are proposed to be taken: (1) Presence/absence, (2) population estimates, (3) spawner surveys, (4) genetic sampling, and (5) habitat quality evaluation. ESA-listed fish are proposed to be observed or captured, anesthetized, handled, allowed to recover from the anesthetic, and released. ESA-listed juvenile salmon indirect mortalities associated with the research are also requested.

PR/GG (P639) requests a 5-year permit for takes of adult and juvenile, threatened, central California coast coho salmon (*Oncorhynchus kisutch*) associated with fish population and habitat studies in drainages on, and proximate to, National Park Service lands in Marin County. The studies consist of five assessment tasks for which ESA-listed fish are proposed to be taken: (1) Presence/absence, (2) population estimates, (3) spawner surveys, (4) genetic sampling, and (5) habitat quality evaluation. ESA-listed fish are proposed to be observed or captured, anesthetized, handled, allowed to recover from the anesthetic, and released. ESA-listed juvenile salmon indirect mortalities associated with the research are also requested.

MMWD (P640) requests a 5-year permit for takes of adult and juvenile, threatened, central California coast coho salmon (*Oncorhynchus kisutch*) associated with fish population and habitat studies in Marin County. The studies consist of five assessment tasks for which ESA-listed fish are proposed to be taken: (1) Presence/absence, (2) population estimates, (3) spawner surveys, (4) genetic sampling, and (5) habitat quality evaluation. ESA-listed fish are proposed to be observed or captured, anesthetized, handled, allowed to recover from the anesthetic, and released. ESA-listed juvenile salmon indirect mortalities associated with the research are also requested.

SCWA (P641) requests a 5-year permit for takes of adult and juvenile, threatened, central California coast coho salmon (*Oncorhynchus kisutch*) associated with fish population and habitat studies in Sonoma County. The studies consist of four assessment tasks for which ESA-listed fish are proposed to be taken: (1) Population estimates, (2) carcass counts, (3) redd surveys, and (4) habitat quality evaluation. ESA-listed fish are proposed to be harassed by SCWA during field observation activities.

Those individuals requesting a hearing on any of these requests for a permit should set out the specific reasons why a hearing would be appropriate (see **ADDRESSES**). The holding of such a hearing is at the discretion of the Assistant Administrator for Fisheries, NOAA. All statements and opinions contained in the above permit application summaries are those of the applicants and do not necessarily reflect the views of NMFS.

Dated: April 2, 1997.

Margaret Lorenz,

Acting Chief, Endangered Species Division, Office of Protected Resources, National Marine Fisheries Service.

[FR Doc. 97–8939 Filed 4–7–97; 8:45 am]

BILLING CODE 3510–22–F

COMMITTEE FOR THE IMPLEMENTATION OF TEXTILE AGREEMENTS

Adjustment of Import Limits for Certain Cotton, Wool and Man-Made Fiber Textile Products Produced or Manufactured in the Dominican Republic

April 2, 1997.

AGENCY: Committee for the Implementation of Textile Agreements (CITA).

ACTION: Issuing a directive to the Commissioner of Customs increasing import limits.

EFFECTIVE DATE: April 9, 1997.

FOR FURTHER INFORMATION CONTACT: Naomi Freeman, International Trade Specialist, Office of Textiles and Apparel, U.S. Department of Commerce, (202) 482–4212. For information on the quota status of these limits, refer to the Quota Status Reports posted on the bulletin boards of each Customs port or call (202) 927–5850. For information on embargoes and quota re-openings, call (202) 482–3715.

SUPPLEMENTARY INFORMATION:

Authority: Executive Order 11651 of March 3, 1972, as amended; section 204 of the Agricultural Act of 1956, as amended (7 U.S.C. 1854); Uruguay Round Agreements Act.

The current limits for certain categories are being increased for carryover.

A description of the textile and apparel categories in terms of HTS numbers is available in the CORRELATION: Textile and Apparel Categories with the Harmonized Tariff Schedule of the United States (see **Federal Register** notice 62 FR 66263, published on December 17, 1996). Also see 61 FR 65375, published on December 12, 1996.

The letter to the Commissioner of Customs and the actions taken pursuant to it are not designed to implement all of the provisions of the Uruguay Round Agreements Act and the Uruguay Round Agreement on Textiles and Clothing, but are designed to assist only in the implementation of certain of their provisions.

Troy H. Cribb,

Chairman, Committee for the Implementation of Textile Agreements.

Committee for the Implementation of Textile Agreements

April 2, 1997.

Commissioner of Customs,
Department of the Treasury, Washington, DC 20229.

Dear Commissioner: This directive amends, but does not cancel, the directive issued to you on December 6, 1996, by the Chairman, Committee for the Implementation of Textile Agreements. That directive concerns imports of certain cotton, wool and man-made fiber textile products, produced or manufactured in the Dominican Republic and exported during the twelve-month period which began on January 1, 1997 and extends through December 31, 1997.

Effective on April 9, 1997, you are directed to increase the limits for the following categories, as provided for under the Uruguay Agreements Act and the Uruguay Round Agreement on Textiles and Clothing:

Category	Adjusted limit [1]
339/639	1,047,473 dozen.
340/640	906,149 dozen
342/642	637,677 dozen.
347/348/647/648	2,169,142 dozen of which not more than 1,032,396 dozen shall be in Category 647/648.
352/652	11,177,700 dozen.
442	80,650 dozen.
443	147,550 numbers.
444	80,650 numbers

Category	Adjusted limit [1]
633	132,959 dozen

[1] The limits have not been adjusted to account for any imports exported after December 31, 1996.

The Guaranteed Access Level (GAL) for the foregoing categories remain unchanged.

The Committee for the Implementation of Textile Agreements has determined that these actions fall within the foreign affairs exception of the rulemaking provisions of 5 U.S.C. 553(a)(1).

Sincerely,

Troy H. Cribb,

Chairman, Committee for the Implementation of Textile Agreements.

[FR Doc. 97–8919 Filed 4–7–97; 8:45 am]

BILLING CODE 3510–DR–F

DEPARTMENT OF DEFENSE

Office of the Secretary

Proposed Collection; Comment Request

AGENCY: Office of the Under Secretary of Defense (Personnel and Readiness).

ACTION: Notice.

In compliance with Section 3506(c)(2)(A) of the Paperwork Reduction Act of 1995, the Office of the Under Secretary of Defense (Personnel and Readiness) announces the following proposed reinstatement of a public information collection and seeks public comment on the provisions thereof. Comments are invited on: (a) Whether the proposed collection of information is necessary for the proper performance of the functions of the agency, including whether the information shall have practical utility; (b) the accuracy of the agency's estimate of burden of the proposed information collection; (c) ways to enhance the quality, utility, and clarity of the information to be collected; and (d) ways to minimize the burden of the information collection on respondents, including through the use of automated collection techniques or other forms of information technology.

DATES: Consideration will be given to all comments received by June 9, 1997.

ADDRESSES: Written comments and recommendations on the proposed information collection should be sent to the Office of the Under Secretary of Defense (Personnel and Readiness) (Program Integration/Legal Policy), ATTN: Major Amy M. Griese, 4000 Defense Pentagon, Washington, DC 20301–4000.

FOR FURTHER INFORMATION CONTACT: To request more information on this proposed information collection or to obtain a copy of the proposal and associated collection instruments, please write to the above address or call at (703) 697–3387.

Title, Associated Form, and OMB Control Number: Indebtedness of Military Personnel—Involuntary Allotments, DD Form 2653, OMB Number 0704–0367.

Needs and Uses: Public Law 103–94, ''The Hatch Act Reform Amendments of 1993,'' directs the establishment of provisions for the involuntary allotment of the pay of a member of the Uniformed Services for indebtedness owed a third party as determined by the final judgment of a court, and as further determined by competent military or executive authority to be in compliance with the Soldiers' and Sailors' Civil Relief Act of 1940. These provisions must also take into consideration the absence of a member of the Uniformed Services from appearance in a judicial proceeding if the absence results from the exigencies of military duty. The information collected hereby, provides the DoD reviewing authority with the data necessary to act on requests from the public for assistance in the collection of debts.

Affected Public: Individuals or households; businesses or other for profit.

Annual Burden Hours: 2,100 hours.

Number of Respondents: 8,400.

Responses Per Respondent: 1.

Average Burden Per Response: 15 minutes.

Frequency: On occasion.

SUPPLEMENTARY INFORMATION:

Summary of Information Collection

This information is used by the Department of Defense to initiate an involuntary allotment from the pay of a member of the Uniformed Services for indebtedness owed a third party as determined by the final judgment of a court. This requirement was created by ''The Hatch Act Reform Amendments of 1993,'' Public Law 103–94. The DD Form 2653, ''Involuntary Allotment Application,'' requires the creditor to provide identifying information on the member of the Uniformed Services; certify a judgment was obtained and that the member's rights under the Soldiers' and Sailors' Civil Relief Act were protected.

L.M. Bynum,

Alternate OSD Federal Register Liaison Officer, Department of Defense.

[FR Doc. 97–8964 Filed 4–7–97; 8:45 am]

BILLING CODE 5000–04–M

DEPARTMENT OF DEFENSE

Office of the Secretary

Submission for OMB Review; Comment Request

ACTION: Notice.

The Department of Defense has submitted to OMB for clearance, the following proposal for collection of information under the provisions of the Paperwork Reduction Act (44 U.S.C. Chapter 35).

Title and Associated Form: Department of Defense Fiscal Year 1997: Assistance to Local Education Agencies (LEAs), OMB Number 0704–0389.

Type of Request: Reinstatement.

Number of Respondents: 127.

Responses Per Respondent: 1.

Annual Responses: 127.

Average Burden Per Response: 20 minutes.

Annual Burden Hours: 42.

Needs and Uses: This information collection requirement is necessary to disperse funds to LEAs in accordance with the National Defense Authorization Act for Fiscal Year 1997 (Sec. 386 of Pub. L. 102–484, as amended by Sec. 372 of Pub. L. 104–201). In order to establish eligibility for assistance and to calculate payments, DoD relies on data furnished by the Department of Education and information provided through an application filed by the LEA. Qualifying LEAs are those in which over 20 percent of the students are federally connected or those which have experienced at least a 20 percent decrease in student enrollment due to Base Realignment and Closure. The application requires the LEA to (a) certify that they have applied for financial assistance from all sources, including the state/commonwealth; (b) have filed a complete and timely application for Section 3 impact assistance to the Secretary of Education; and (c) include a copy of their independent audit. Approximately 127 LEAs are expected to qualify.

Affected Public: State, Local, or Tribal Government.

Frequency: Annually.

Repondent's Obligation: Required to obtain or retain benefits.

OMB Desk Officer: Mr. Edward C. Springer.

Written comments and recommendations on the proposed information collection should be sent to Mr. Springer at the Office of Management and Budget, Desk Officer for DoD, Room 10236, New Executive Office Building, Washington, DC 20503.

DOD Clearance Officer: Mr. Robert Cushing.

Written request for copies of the information collection proposal should be sent to Mr. Cushing, WHS/DIOR, 1215 Jefferson Davis Highway, Suite 1204, Arlington, VA 22202–4302.

Dated: April 2, 1997.

Patricia L. Toppings,

Alternate OSD Federal Register Liaison Officer, Department of Defense.

[FR Doc. 97–8966 Filed 4–7–97; 8:45 am]

BILLING CODE 5000–04–M

DEPARTMENT OF DEFENSE

Office of the Secretary

Submission for OMB Review; Comment Request

ACTION: Notice.

The Department of Defense has submitted to OMB for clearance, the following proposal for collection of information under the provisions of the Paperwork Reduction Act (44 U.S.C. Chapter 35).

Title and Associated Form: Record of Military Processing, Armed Forces of the United States, DD Form 1966, OMB Number 0704–0173.

Type of Request: Reinstatement.

Number of Respondents: 510,000.

Responses Per Respondent: 1.

Annual Responses: 510,000.

Average Burden Per Response: 20 minutes.

Annual Burden Hours: 170,000.

Needs and Uses: Title 10 U.S.C. 504, 505, 508, 520a, and 12102; 14 U.S.C. 351 and 362; and 50 U.S.C. Appendix 451 requires applicants to meet standards for enlistment into the Armed Forces. This information collection is required to obtain data on individuals applying for enlistment in the Armed Forces of the United States to determine eligibility for enlistment. The information collected accompanies the applicant throughout the enlistment process. It also is used for establishing personnel records on those who enlist.

Affected Public: Individuals or households.

Frequency: On occasion.

Respondent's Obligation: Voluntary.

OMB Desk Officer: Mr. Edward C. Springer.

Written comments and recommendations on the proposed information collection should be sent to Mr. Springer at the Office of Management and Budget, Desk Officer for DoD, Room 10236, New Executive Office Building, Washington, DC 20503.

DOD Clearance Officer: Mr. Robert Cushing.

Written requests for copies of the information collection proposal should be sent to Mr. Cushing, WHS/DIOR, 1215 Jefferson Davis Highway, Suite 1204, Arlington, VA 22202–4302.

Dated: April 2, 1997.

Patricia L. Toppings,

Alternate OSD Federal Register Liaison Officer, Department of Defense.

[FR Doc. 97–8967 Filed 4–7–97; 8:45 am]

BILLING CODE 5000–04–M

DEPARTMENT OF DEFENSE

Office of the Secretary

Submission for OMB Review; Comment Request

ACTION: Notice.

The Department of Defense has submitted to OMB for clearance, the following proposal for collection of information under the provisions of the Paperwork Reduction Act (44 U.S.C. Chapter 35).

Title and Associated Form: Record of Arrival and Departures of Vessels at Marine Terminals, ENG Form 3926, OMB Number 0710–0005.

Type of Request: Reinstatement.

Number of Respondents: 450.

Responses Per Respondent: 12.

Annual Responses: 5,400.

Average Burden Per Response: 5 minutes.

Annual Burden Hours: 2,500.

Needs and Uses: The Corps of Engineers uses ENG Form 3926 in conjunction with ENG Forms 3925, 3925B, and 3925P as the basic source of input to conduct the Waterborne Commerce Statistics data collection program. The information collected enables the COE to identify significant movements of vessels and tonnage.

Affected Public: Business or other for-profit.

Frequency: Monthly.

Respondent's Obligation: Voluntary.

OMB Desk Officer: Mr. Jim Laity.

Written comments and recommendations on the proposed information collection should be sent to Mr. Laity at the Office of Management and Budget, Desk Officer for U.S. Army COE, Room 10202, New Executive Office Building, Washington, DC 20503.

DOD Clearance Officer: Mr. Robert Cushing.

Written requests for copies of the information collection proposal should be sent to Mr. Cushing, WHS/DIOR, 1215 Jefferson Davis Highway, Suite 1204, Arlington, VA 22202–4302.

Dated: April 2, 1997.

Patricia L. Toppings,

Alternate OSD Federal Register Liaison Officer, Department of Defense.

[FR Doc. 97–8968 Filed 4–7–97; 8:45 am]

BILLING CODE 5000–04–M

DEPARTMENT OF DEFENSE

Office of the Secretary

National Defense Panel; Notice of Meeting

SUMMARY: This notice sets forth the schedule and summary agenda for the meeting of the National Defense Panel on April 15 and 16, 1997. In accordance with Section 10(d) of the Federal Advisory Committee Act, Public Law 92–463, as amended [5 U.S.C. App. II, (1982)], it has been determined that this National Defense Panel meeting concerns matters listed in 5 U.S.C. 552b (c)(1)(1982), and that accordingly this meeting will be closed to the public from 0830–1700, April 15, 1997, and from 1300–1700, 16 April 1997 in order for the Panel to discuss classified material. The meeting will be open to the public from 0900–1200, 16 April 1997.

DATES: April 15 and 16, 1997.

ADDRESSES: Suite 504, 1931 Jefferson Davis Hwy, Arlington, VA.

SUPPLEMENTARY INFORMATION: The National Defense Panel was established on January 14, 1997 in accordance with the Military Force Structure Review Act of 1996, Public Law 104–201. The mission of the National Defense Panel is to provide the Secretary of Defense and Congress with an independent, non-partisan assessment of the Secretary's Quadrennial Defense Review and an Alternative Force Structure Analysis. This analysis will explore innovative ways to meet the national security challenges of the twenty-first Century.

PROPOSED SCHEDULE AND AGENDA: The National Defense Panel will meet in closed session from 0830–1700 on April 15, 1997, the meeting will be held at Suite 504, 1931 Jefferson Davis Highway, Arlington, VA. On April 16, 1997 the Panel will have an outreach seminar. Presentations will be given by invited speakers. Other agencies are able to give written comments to the Panel at that time. The outreach seminar will be held at the Sheraton National Hotel, 900 South Orme Street, Arlington, VA and will be open to the public from 0900–1200. The meeting will be closed from 1300–1700, 16 April 1997, the location of the meeting will be Suite 504, 1931 Jefferson Davis Highway, Arlington, VA. During the closed

sessions the Panel will engage the Service Chiefs on their perspective of the Quadrennial Defense Review. Additionally, discussion will include, but not limited to, Dynamic commitment and the congressional perspective of the Quadrennial Defense Review. These discussions are based upon classified information provided by the DoD QDR Panels.

FOR FURTHER INFORMATION CONTACT: Please contact the National Defense Panel at (703) 602–4175/6.

Dated: April 3, 1997.

L.M. Bynum,

Alternate OSD Federal Register Liaison Officer, Department of Defense.

[FR Doc. 97–8963 Filed 4–7–97; 8:45 am]

BILLING CODE 5000–04–M

DEPARTMENT OF DEFENSE

Office of the Secretary

Meeting of the President's Security Policy Advisory Board; Action Notice

SUMMARY: The President's Security Policy Advisory Board has been established pursuant to Presidential Decision Directive/NSC–29, which was signed by President on September 16, 1994.

The Board will advise the President on proposed legislative initiatives and executive orders pertaining to U.S. security policy, procedures and practices as developed by the U.S. Security Policy Board, and will function as a federal advisory committee in accordance with the provisions of Public Law 92–463, the ''Federal Advisory Committee Act.''

The President has appointed from the private sector, three of five Board members each with a prominent background and expertise related to security policy matters. General Larry Welch, USAF (Ret.) will chair the Board. Other members include: Admiral Thomas Brooks, USN (Ret.) and Ms. Nina Stewart.

The next meeting of the Board will be held on May 13, 1997, 0900 at Lockheed Martin, 12506 Lake Underhill Road, Orlando, Florida 32825 and will be open to the public.

For further information please contact Mr. Terence Thompson, telephone: 703–602–9969.

Dated: April 3, 1997.

L.M. Bynum,

Alternate OSD Federal Register Liaison Officer, Department of Defense.

[FR Doc. 97–8965 Filed 4–7–97; 8:45 am]

BILLING CODE 5000–04–M

DEPARTMENT OF DEFENSE

Defense Finance and Accounting Service

Privacy Act of 1974; System of Record

AGENCY: Defense Finance and Accounting Service, DOD.

ACTION: Notice to alter a record system.

SUMMARY: The Defense Finance and Accounting Service proposes to alter a system of records notice in its inventory of record systems subject to the Privacy Act of 1974 (5 U.S.C. 552a), as amended.

DATES: The alteration will be effective on May 8, 1997, unless comments are received that would result in a contrary determination.

ADDRESSES: Send comments to Administrative Policy and Support, Defense Finance and Accounting Service, Room 416, Arlington, VA 22240-5291

FOR FURTHER INFORMATION CONTACT: Ms. Genevieve Turney at (703) 607–5165.

SUPPLEMENTARY INFORMATION:

The proposed system report, as required by 5 U.S.C. 522a(r) of the Privacy Act of 1974, as amended, was submitted on March 28, 1997, to the House Committee on Government Reform and Oversight, the Senate Committee on Governmental Affairs, and the Office of Management and Budget (OMB) pursuant to paragraph 4c of Appendix I to OMB Circular No. A–130, 'Federal Agency Responsibilities for Maintaining Records About Individuals,' dated February 8, 1996 (February 20, 1996, 61 FR 6427).

Dated: April 3, 1997.

L. M. Bynum,

Alternate OSD Federal Register Liaison Officer, Department of Defense.

T7332

SYSTEM NAME:

Defense Debt Management System *(December 23, 1996, 61 FR 67534).*

CHANGES:

* * * * *

CATEGORIES OF INDIVIDUALS COVERED BY THE SYSTEM:

Delete entry and replace with 'Contractors and individuals who are indebted to a Department of Defense (DoD) agency that have transferred debts to the Defense Debt Management System serviced by the Defense Finance and Accounting Service. *EXCLUSION: This system does not include individuals or contractors who are indebted to a DoD agency and who have been identified as currently receiving pay from DoD.'*

* * * * *

T7332

SYSTEM NAME:

Defense Debt Management System.

SYSTEM LOCATION:

Primary location: Defense Finance and Accounting Service-Denver Center, 6760 East Irvington Place, Denver, CO 80279–8000.

Defense Finance and Accounting Service-Indianapolis Center, 8899 East 56th Street, Indianapolis, IN 46249–1460;

Defense Finance and Accounting Service-Columbus Center, 4280 East 5th Avenue, Building 3, Columbus, OH 43218–2317;

Defense Finance and Accounting Service-Cleveland Center, 1240 East 9th Street, Cleveland, OH 44199–2056;

Defense Finance and Accounting Service-Kansas City Center, 1500 East 95th Street, Kansas City, MO 64197–0001;

Defense Accounting Offices at military bases and at National Guard activities, and Reserve units of all the military services. Official mailing address can be obtained from the Chief, Debt Management Systems Division, Directorate of Debt and Claims Management, Defense Finance and Accounting Service-Denver Center, 6760 East Irvington Place, Denver, CO 80279–8000.

CATEGORIES OF INDIVIDUALS COVERED BY THE SYSTEM:

Contractors and individuals who are indebted to a Department of Defense (DoD) agency that have transferred debts to the Defense Debt Management System serviced by the Defense Finance and Accounting Service. *EXCLUSION: This system does not include individuals or contractors who are indebted to a DoD agency and who have been identified as currently receiving pay from DoD.*

CATEGORIES OF RECORDS IN THE SYSTEM:

Information varies depending on the debtor and the related history of debt collection activity. Normally, the name, taxpayer identification number, address, amount of debt or delinquent amount, basis of the debt, date debt arose, office referring debt, collection efforts, credit reports, debt collection letters, and correspondence to or from the debtor relating to the debt.

Correspondence with employing agencies of debtors requesting that action begin to collect the delinquent debt through voluntary or involuntary offset procedures against the employees' salary or compensation due a retiree.

Correspondence with other agencies requesting offset from payments due the debtor. These records may include

individuals name, rank, date of birth, Social Security Number, debt amount documentation establishing overpayment status, military pay records, financial status affidavits, credit references, and substantiating documents such as military pay orders, pay adjustment authorizations, military master pay account printouts, records of travel payments, financial record data folders, miscellaneous vouchers, debtor financial records, credit reports, promissory notes, and debtor financial statements.

Information on U. S. Treasury Department, Internal Revenue Service (IRS) and General Accounting Office (GAO) inquiries, judicial proceedings regarding bankruptcy, pay account histories, and token payment information.

Applications for waiver of erroneous payment or for remission of indebtedness with supporting documents including statements of financial status (personal income and expenses), statements of commanders or Defense Accounting Officers, correspondence with members and employees, or overpayments of Survivor Benefit Plan (SBP) benefits.

Delinquent accounts receivable from field Defense Accounting Officers including returned checks, medical services billings, collection records, and summaries of military investigations.

Reports from probate courts regarding estates of deceased members.

Reports from bankruptcy courts regarding claims of the U.S. Government against debtors.

Correspondence between contracting officer, administrative contracting officer, or a DFAS center and contractor, that terminates a contract, demands payment, and establishes debt, and any other related papers.

AUTHORITY FOR MAINTENANCE OF THE SYSTEM:

5 U.S.C. 301, 5512, 5513, 5514, and 5584; 10 U.S.C. 1442, 1453, 2774, 2775, 9835; 31 U.S.C. 3325, 3342, 3526, 3702, 3711, 3716–3718; 32 U.S.C. 710, 716; 37 U.S.C. 1007(c); 40 U.S.C. 721, 723, 725, 726, 727, 728, 729; 49 U.S.C. 3101 Chapter 1 et. seq.; Pub.L. 97–365, as amended by Pub.L. 104–134; Pub.L. 89–508; E.O. 9397 (SSN); and DoD 7000.14-R, Department of Defense Financial Management Regulation, Volume 5, Part Two.

PURPOSE(S):

For the administrative management and collection of all delinquent debts, including past due loan payments, overpayments, fines, interest, penalties, fees, damages, leases, sales of real or personal property, etc., due to the DoD and debts due to other Federal departments and agencies of the U.S. Government that may be referred to the DoD for collection.

To provide for the implementation of the salary offset (SOL is 10 years) provisions of 5 U.S.C. 5514, the administrative offset provisions of 31 U.S.C. 3711 and 3716–3718 and the provisions of the Federal Claims Collection Standards (FCCS), which applies to personal debts.

To permit collection of delinquent claims and debts owed to the U.S. Government under any program or service administered by any creditor DoD operating administration or component thereof.

To maintain and distribute a list of contractors indebted to the U.S. Government, and to initiate collection against a contractor which is indebted to the U.S. Government, and to determine whether judicial proceedings should be initiated against the contractor. Guidance regarding contract debts is contained in the Federal Acquisition Regulation, and the Financial Management Regulation (DoD 7000.14–R), volume 10.

To determine the validity of waivers or to make referrals to the Government Accounting Office (GAO).

To maintain records of investigations conducted for the purpose of confirmation, cancellation, and remission of debt, waivers, and other determinations regarding the accuracy and validity of a debt.

All records in this system are subject to use in authorized computer matching programs within DoD and with other Federal agencies or non-Federal agencies as regulated by the Privacy Act of 1974 (5 U.S.C. 552a) as amended.

ROUTINE USES OF RECORDS MAINTAINED IN THE SYSTEM, INCLUDING CATEGORIES OF USERS AND THE PURPOSES OF SUCH USES:

In addition to those disclosures generally permitted under 5 U.S.C. 552a(b) of the Privacy Act, these records or information contained therein may specifically be disclosed outside the DoD as a routine use pursuant to 5 U.S.C. 552a(b)(3) as follows:

To the U.S. General Accounting Office (GAO), the Department of Justice, and the United States Attorney General, or other Federal agencies for further collection action on any delinquent account when circumstances warrant.

To commercial credit reporting agencies for the purpose of either adding to a credit history file on an individual or business entity for use in the administration of debt collection. Delinquent debt information may be furnished for purposes of providing an inducement for debtors to pay their obligations to the Federal government.

To any Federal agency where the debtor is employed or receiving some type of payment for the purpose of enabling that agency to collect a debt owed the U.S. Government on behalf of the agency by counseling the debtor for voluntary repayment or by initiating administrative or salary offset procedures under the provisions of the Debt Collection Act of 1982 (Pub.L. 97–365, as amended by Pub.L. 104–134).

To any other Federal agency including, but not limited to the Internal Revenue service (IRS) pursuant to 31 U.S.C. 3720A, for the purpose of effecting an administrative offset against the debtor for a delinquent debt owed the U.S. Government by the debtor.

To the Department of Veteran Affairs for administration of laws pertaining to veterans' benefits.

To any other Federal agency for the purpose of administrative offset of a debt, including but not limited to the Office of Personnel Management for personnel management functions, or the IRS to obtain a mailing address of a taxpayer for the purpose of locating such taxpayer to collect or compromise a Federal claim against the taxpayer pursuant to 26 U.S.C. 1603(m)(2) and in accordance with 31 U.S.C. 3711, 3217, and 3718; to obtain locator status for delinquent accounts receivable; to report write-off amounts as taxable income as pertains to amounts compromised and accounts barred from litigation due to age; and to provide for offset of tax refunds.

To any other Federal, state, or local agency for the purpose of conducting an authorized computer matching program to identify and locate delinquent debtors for recoupment of debts owed the DoD or one of its components.

To commercial collection agencies for the purpose of collection services to recover moneys owed to the U.S. Government.

To publish or otherwise publicly disseminate information regarding the identity of the debtor and the existence of the nontax debt, subject to review by the Secretary of the Treasury.

The 'Blanket Routine Uses' published at the beginning of the DFAS compilation of record system notices also apply to this system.

DISCLOSURE TO CONSUMER REPORTING AGENCIES:

Disclosures pursuant to 5 U.S.C. 552a(b)(12) may be made from this system to 'consumer reporting agencies' as defined in the Fair Credit Reporting Act (14 U.S.C. 1681a(f)) or the Federal Claims Collection Act of 1966 (31 U.S.C.

3701(a)(3)). The purpose of this disclosure is to aid in the collection of outstanding debts owed to the Federal government; typically to provide an incentive for debtors to repay delinquent Federal government debts by making these debts part of their credit records.

The disclosure is limited to information necessary to establish the identity of the individual, including name, address, and taxpayer identification number (Social Security Number); the amount, status, and history of the claim; and the agency or program under which the claim arose for the sole purpose of allowing the consumer reporting agency to prepare a commercial credit report.

POLICIES AND PRACTICES FOR STORING, RETRIEVING, ACCESSING, RETAINING, AND DISPOSING OF RECORDS IN THE SYSTEM:

STORAGE:

Records are maintained on computer disks, magnetic tape, microfiche, and paper file folders. Computer disks, magnetic tape, microfiche, and paper file folders.

RETRIEVABILITY:

Retrieved by name, Taxpayer Identification Number, other identification number or system identifier, or name of accountable disbursing office in whose custody the public funds were entrusted when the debt arose.

SAFEGUARDS:

Records are accessed by the custodian of the record system and by personnel responsible for servicing the record system in performance of their official duties. Records are stored in locked cabinets or rooms, or in guarded buildings.

RETENTION AND DISPOSAL:

All cases will remain active until settled by full payment, waiver or write-off. The system contains records requiring a retention period of up to 10 years after final action. Records are retired to National Records Centers. Destruction is accomplished by tearing, shredding, pulping, macerating, or burning.

SYSTEM MANAGER(S) AND ADDRESS:

Chief, Debt Management Systems Division, Directorate of Debt and Claims Management, Defense Finance and Accounting Service - Indianapolis Center, 8899 East 56th Street, Indianapolis, IN 46249–1460;

Chief, Debt Management Systems Division, Directorate of Debt and Claims Management, Defense Finance and Accounting Service - Columbus Center, 4280 East 5th Avenue, Building 3, Columbus, OH 43218–2317;

Chief, Debt Management Systems Division, Directorate of Debt and Claims Management, Defense Finance and Accounting Service - Cleveland Center, 1240 East 9th Street, Cleveland, OH 44199–2056;

Chief, Debt Management Systems Division, Directorate of Debt and Claims Management, Defense Finance and Accounting Service - Denver Center, 6760 East Irvington Place, Denver, CO 80279–8000;

Chief, Debt Management Systems Division, Directorate of Debt and Claims Management, Defense Finance and Accounting Service - Kansas City Center, 1500 East 95th Street, Kansas City, MO 64197–0001.

NOTIFICATION PROCEDURE:

Individuals seeking to determine whether information about themselves is contained in this system should address written inquiries to the Privacy Act Officer at the appropriate DFAS Center identified under *'System manager'*.

Individual should furnish name, taxpayer identification number (Social Security Number), or other identifying information verifiable from the records.

RECORD ACCESS PROCEDURES:

Individuals seeking access to information about themselves contained in this system of records should address written inquiries to the Privacy Act Officer at the appropriate DFAS Center identified under *'System manager'*.

Individual should furnish name, taxpayer identification number (Social Security Number), or other information verifiable from the records itself.

CONTESTING RECORD PROCEDURES:

The DFAS rules for accessing records, for contesting contents and appealing initial agency determinations are published in DFAS Regulation 5400.11–R; 32 CFR part 324; or may be obtained from the Privacy Act Officer at any DFAS Center.

RECORD SOURCE CATEGORIES:

Records are obtained from the debtor, DFAS centers, other DoD organizations, and agencies of Federal state, and local governments, as applicable or appropriate for processing the case.

EXEMPTIONS CLAIMED FOR THE SYSTEM:

None.

[FR Doc. 97–8962 Filed 4–7–97; 8:45 am]

BILLING CODE 5000–04–F

DEPARTMENT OF ENERGY

Environmental Management Site-Specific Advisory Board, Kirtland Area Office (Sandia); Notice of Open Meeting

AGENCY: Department of Energy.

ACTION: Notice of open meeting.

SUMMARY: Pursuant to the provisions of the Federal Advisory Committee Act (Pub. L. 92–463, 86 Stat. 770) notice is hereby given of the following Advisory Committee meeting: Environmental Management Site-Specific Advisory Board, Kirtland Area Office (Sandia).

DATE: Wednesday, April 16, 1997: 6:50 p.m.–9:15 p.m. (Mountain Standard Time).

ADDRESSES: Loma Linda Community Center, 1700 Yale Boulevard SE, Albuquerque, New Mexico.

FOR FURTHER INFORMATION CONTACT: Mike Zamorski, Acting Manager, Department of Energy Kirtland Area Office, P.O. Box 5400, Albuquerque, NM 87185 (505) 845–4094.

SUPPLEMENTARY INFORMATION:

Purpose of the Board: The purpose of the Board is to make recommendations to DOE and its regulators in the areas of environmental restoration, waste management, and related activities.

Tentative Agenda

6:50 p.m.—Public Comment Period
7:00 p.m.—Approval of Agenda
7:05 p.m.—Chair's Report—Jesse D. Dompreh
7:20 p.m.—Chemical Waste Landfill Update
7:50 p.m.—Site Prioritization Update
8:05 p.m.—Break
8:20 p.m.—Membership and Nominating Committee Report
8:35 p.m.—New/Other Business
8:50 p.m.—Agenda Items for Next Meeting
9:00 p.m.—Public Comment Period
9:15 p.m.—Announcement of Next Meeting/Adjourn

A final agenda will be available at the meeting Wednesday, April 16, 1997.

Public Participation: The meeting is open to the public. Written statements may be filed with the Committee either before or after the meeting. Individuals who wish to make oral statements pertaining to agenda items should contact Mike Zamorski's office at the address or telephone number listed above. Requests must be received 5 days prior to the meeting and reasonable provision will be made to include the presentation in the agenda. The Designated Federal Official is empowered to conduct the meeting in a

fashion that will facilitate the orderly conduct of business. Each individual wishing to make public comment will be provided a maximum of 5 minutes to present their comments. This notice is being published less than 15 days before the date of the meeting due to programatic issues that has to be resolved.

Minutes: The minutes of this meeting will be available for public review and copying at the Freedom of Information Public Reading Room, 1E–190, Forrestal Building, 1000 Independence Avenue, SW, Washington, DC 20585 between 9:00 a.m. and 4 p.m., Monday-Friday, except Federal holidays. Minutes will also be available by writing to Mike Zamorski, Department of Energy Kirtland Area Office, P.O. Box 5400, Albuquerque, NM 87185, or by calling (505) 845–4094.

Issued at Washington, DC on April 3, 1997.

Rachel M. Samuel,

Acting Deputy Advisory Committee Management Officer.

[FR Doc. 97–8934 Filed 4–7–97; 8:45 am]

BILLING CODE 6450–01–P

DEPARTMENT OF ENERGY

Environmental Management Site-Specific Advisory Board, Paducah

AGENCY: Department of Energy.

ACTION: Notice of open meeting.

SUMMARY: Pursuant to the provisions of the Federal Advisory Committee Act (Pub. L. 92–463, 86 Stat. 770) notice is hereby given of the following Advisory Committee meeting: Environmental Management Site-Specific Advisory Board (EM SSAB), Paducah Gaseous Diffusion Plant.

DATES: Thursday, April 17, 1997: 6:00 p.m.–9:00 p.m.

ADDRESSES: West Kentucky Technical School (cafeteria), 5200 Blandville Road, Paducah, Kentucky.

FOR FURTHER INFORMATION CONTACT: Carlos Alvarado, Site-Specific Advisory Board Coordinator, Department of Energy Paducah Site Office, Post Office Box 1410, MS–103, Paducah, Kentucky 42001, (502) 441–6804.

SUPPLEMENTARY INFORMATION:

Purpose of the Board

The purpose of the Board is to make recommendations to DOE and its regulators in the areas of environmental restoration, waste management, and related activities.

Tentative Agenda

Updates on proposed meeting sites, the Environmental Management and Enrichment Facilities Project report, the Federal Facility Agreement, the membership drive, the budget, the draft work plan, and presentations on the 10-Year Plan and a Request for Proposal.

Public Participation: The meeting is open to the public. Written statements may be filed with the Committee either before or after the meeting. Individuals who wish to make oral statements pertaining to agenda items should contact Carlos Alvarado at the address or telephone number listed above. Requests must be received 5 days prior to the meeting and reasonable provision will be made to include the presentation in the agenda. The Designated Federal Official is empowered to conduct the meeting in a fashion that will facilitate the orderly conduct of business. Each individual wishing to make public comment will be provided a maximum of 5 minutes to present their comments. This notice is being published less than 15 days before the date of the meeting due to programmatic issues that has to be resolved.

Minutes: The minutes of this meeting will be available for public review and copying at the Department of Energy's Environmental Information and Reading Room at 175 Freedom Boulevard, Highway 60, Kevil, Kentucky between 8:00 a.m. and 5:00 p.m. on Monday through Friday, or by writing to Carlos Alvarado, Department of Energy Paducah Site Office, Post Office Box 1410, MS–103, Paducah, Kentucky 42001, or by calling him at (502) 441–6804.

Issued at Washington, DC on April 3, 1997.

Rachel M. Samuel,

Acting Deputy Advisory Committee Management Officer.

[FR Doc. 97–8935 Filed 4–7–97; 8:45 am]

BILLING CODE 6450–01–P

DEPARTMENT OF ENERGY

[Docket No. ETEC–029]

Certification of the Radiological Condition of Building 029 at the Energy Technology Engineering Center near Chatsworth, California

AGENCY: U.S. Department of Energy, Office of Environmental Restoration.

ACTION: Notice of Certification.

SUMMARY: The Department of Energy (DOE) has completed radiological surveys and taken remedial action to decontaminate Building 029 located at the Energy Technology Engineering Center (ETEC) near Chatsworth, California. This property was found to contain radioactive materials from activities carried out for the Atomic Energy Commission and the Energy Research and Development Administration (AEC/ERDA), predecessor agencies to DOE. Although DOE owns the majority of the buildings and equipment, a subsidiary of Rockwell International, Rocketdyne, owned the land. Rocketdyne has recently been sold to Boeing North American Incorporated.

FOR FURTHER INFORMATION CONTACT: Don Williams, Program Manager, Office of Northwestern Area Programs, Office of Environmental Restoration (EM–44), U.S. Department of Energy, Washington, D.C. 20585.

SUPPLEMENTARY INFORMATION: DOE has implemented environmental restoration projects at ETEC (Ventura County, Map Book 3, Page 7, Miscellaneous Records) as part of DOE's Environmental Restoration Program. One objective of the program is to identify and clean up or otherwise control facilities where residual radioactive contamination remains from activities carried out under contract to AEC/ERDA during the early years of the Nation's atomic energy program.

ETEC is comprised of a number of facilities and structures located within Administrative Area IV of the Santa Susana Field Laboratory. The work performed for DOE at ETEC consisted primarily of testing of equipment, materials, and components for nuclear and energy related programs. These nuclear energy research and development programs, conducted by Atomics International under contract to AEC/ERDA, began in 1946. Several buildings and land areas became radiologically contaminated as a result of facility operations and site activities. Building 029 is one ETEC area that has been designated for cleanup under the DOE Environmental Restoration Program. Other areas undergoing decontamination will be released as they are completed and are verified to meet established cleanup criteria and standards for release without radiological restrictions as established in DOE Order 5400.5.

Building 029 is located in the north-eastern section of ETEC with access by way of 10th Street, which intersects ''G'' Street just southwest of Building 064. An asphalt concrete roadway (10th Street) runs directly to the facility.

Constructed in 1959 as an open bay facility, Building 029 is a Butler-type building with a steel frame and

corrugated metal siding and roofing. The building is 20 ft. x 40 ft. with a 12-ft. eave height. It is a single room with no office, support laboratory, rest room areas, or installed air conditioners. The ceiling and walls are insulated with a 1-inch thick fiberglass mat. The concrete floors were originally covered with asphalt tile; however, the tile has now been removed.

From 1959 to 1974, Building 029 was used as a facility for calibrating radiation detection instruments. In 1959 and in subsequent years, it was known as the ''Radiation Measurements Facility'' or the ''Old Calibration Facility.''

Calibration sources were housed within Building 029. Radium-226, and later cesium-137, sources were housed inside a source storage well made from a 12-inch diameter, 10-ft. long Schedule-20 galvanized pipe casing which was installed below grade. The sources were attached to nylon strings and were guided through three 1-inch diameter Pyrex tube thimbles within Schedule-40 galvanized pipes which were embedded evenly within the casing, with concrete as embedment. The encapsulated cobalt-60 sources were housed separately in a 12-inch diameter pipe which extended 10 ft. below grade and 4 ft. above grade. Above grade, the pipe was enclosed with lead shielding and covered by a 77-inch square concrete rolling door. The neutron sources were housed in a 3 ft. x 3 ft. x 2 ft. deep pit, with a graphite neutron exposure block.

All of the sources were fully encapsulated, leak-tested at least every six months in compliance with State of California Radiation Control Regulations, and subsequently removed from Building 029. Thus, apart from one incident involving the dropping of a radium-226 capsule (described below), there is no known cause for radioactive contamination in the facility.

Radioactivity was released from one of the radium-226 source capsules (Source No. 1) on March 23, 1964, when this source became detached from the nylon string and fell into the bottom of the source thimble. The 13-ft. fall cracked the outer plastic encapsulation surrounding the inner capsule and released some loose radium-226. Release of radioactivity was primarily confined to the well and the source thimble. An April 10, 1964, report describing the incident, the subsequent recovery of the source, and the decontamination of the area outside the well is found in Reference 11, Appendix A, of the Final Decontamination and Radiological Survey report.

Operation of the facility continued by replacing all the radium-226 sources with two cesium-137 sources. On November 20, 1970, the 4.6 curie cesium-137 source was accidently dropped 10 ft. to the bottom of the well. No contamination release occurred. When all sources were removed from Building 029 in 1974, a radiation survey was performed which showed that the facility was free of radiological contamination except for the interior of the radium-226 storage well. In 1988, the radium-226 storage well was excavated along with the radium-226 source holder, and both were disposed of as low-level radioactive waste. This work was performed and paid for by Rockwell/Rocketdyne.

Rockwell/Rocketdyne performed an additional radiological survey in 1990. In 1993, the Environmental Survey and Site Assessment Program of the Oak Ridge Institute for Science and Education performed an independent verification of the decontamination work performed by Rockwell/Rocketdyne in 1988. Post-decontamination surveys have demonstrated that Building 029 is in compliance with DOE decontamination criteria and standards for release without radiological restrictions. The State of California Department of Health Services has concurred that the proposed release guidelines provide adequate assurance for release without further radiological restrictions. In the event of property transfer, DOE intends to comply with applicable Federal, State, and local requirements.

No appreciable personnel radiation exposure was anticipated or encountered from decontamination activities for Building 029.

Building 029 decommissioning costs were funded by Rockwell International and complete cost records are unavailable.

The certification docket will be available for review between 9:00 a.m. and 4:00 p.m., Monday through Friday (except Federal holidays), in the U.S. DOE Public Reading Room located in Room 1E–190 of the Forrestal Building, 1000 Independence Avenue S.W., Washington, D.C. Copies of the certification docket will also be available at the following locations: DOE Public Document Room, U.S. Department of Energy, Oakland Operations Office, the Federal Building, 1301 Clay Street, Oakland, CA; California State University, Northridge, Urban Archives Center, Oviatt Library, Room 4, 18111 Nordhoff, Northridge, CA; Simi Valley Library, 2629 Tapo Canyon Road, Simi Valley, CA; and the Platt Branch, Los Angeles Public Library, 23600 Victory Boulevard, Woodland Hills, CA.

DOE has issued the following statement of certification:

Statement of Certification: Energy Technology Engineering Center, Building 029

The U.S. Department of Energy (DOE), Oakland Operations Office, Environmental Restoration Division, has reviewed and analyzed the radiological data obtained following decontamination of Building 029 at the Energy Technology Engineering Center. Based on analysis of all data collected and the results of independent verification, DOE certifies that the following property is in compliance with DOE radiological decontamination criteria and standards as established in DOE Order 5400.5. This certification of compliance provides assurance that future use of the property will result in no radiological exposure above applicable guidelines established to protect members of the general public or site occupants. Accordingly, the property specified below is released from DOE's Environmental Restoration Program.

Property owned by Boeing North American Incorporated:

Building 029, at the Energy Technology Engineering Center (situated in Area IV of the Santa Susana Field Laboratory), located in a portion of Tract ''A'' of Rancho Simi, in the County of Ventura, State of California, as per map recorded in Book 3, Page 7 of Miscellaneous Records of Ventura County.

Issued in Washington, D.C., on March 28, 1997.

James J. Fiore,

Acting Deputy Assistant Secretary for Environmental Restoration.

Statement of Certification: Energy Technology Engineering Center, Building 029

The U.S. Department of Energy, Oakland Operations Office, Environmental Restoration Division, has reviewed and analyzed the radiological data obtained following decontamination of the Energy Technology Engineering Center Building 029. Based on this analysis of all data collected, the Department of Energy (DOE) certifies that the following property is in compliance with DOE decontamination criteria and standards. This certification of compliance provides assurance that future use of the property will result in no radiological exposure above applicable guidelines established to protect members of the general public or site occupants.

Accordingly, the property specified below is released from DOE's Environmental Restoration Program.

Property owned by Rockwell International Corporation:

Building 029, at the Energy Technology Engineering Center, located in a portion of Tract ''A'' of Rancho Simi, in the County of Ventura, State of California, as per map recorded in Book 3, Page 7 of Miscellaneous Records of Ventura County.

Certification:

Dated: January 23, 1997.

Roger Liddle,

Director, ERD.

[FR Doc. 97–8936 Filed 4–7–97; 8:45 am]

BILLING CODE 6450–01–P

DEPARTMENT OF ENERGY

Federal Energy Regulatory Commission

[Docket No. RP97–110–001]

Black Marlin Pipeline Company; Notice of Compliance Filing

April 2, 1997.

Take notice that on March 31, 1997, Black Marlin Pipeline Company (Black Marlin) tendered for filing as part of its FERC Gas Tariff, first Revised Volume No. 1, the tariff sheets identified on attachment A to the filing.

Black Marlin states that the instant filing is in compliance with the Commission's order issued March 4, 1997 in Docket No. RP97–110–000 (March 4 Order) and with Order No. 587–B issued January 30, 1997 in Docket No. RM96–1–003.

Black Marlin states that the instant filing is to (i) make effective the changes to the General Terms and Conditions (GTC) of Black Marlin's Tariff which are necessary to implement Gas Industry Standards Board (GISB) standards which were approved on a pro forma basis in the March 4 Order and to comply with certain other changes required by the March 4 Order, (ii) incorporate the GISB data dictionary standards not previously incorporated by Black Marlin, and (iii) incorporate the GISB Electronic Delivery Mechanism (EDM) standards adopted by the Commission in Order No. 587–B, all as required by the March 4 Order.

In addition, in compliance with Order No. 587–B, Black Marlin states that it is filing a complete table showing for each GISB standard adopted by the Commission in Order Nos. 587 and 587–B, the complying tariff sheet.

Any person desiring to protest said filing should file a protest with the Federal Energy Regulatory Commission, 888 First Street, NE, Washington, DC, 20426, in accordance with the Commission's Rules and Regulations and Order No. 587. All such protests should be filed on or before April 21, 1997. Protests will be considered by the Commission in determining the appropriate action to be taken, but will not serve to make protestants parties to the proceeding. Copies of this filing are on file with the Commission and are available for public inspection in the Public Reference Room.

Lois D. Cashell,

Secretary.

[FR Doc. 97–8890 Filed 4–7–97; 8:45 am]

BILLING CODE 6717–01–M

DEPARTMENT OF ENERGY

Federal Energy Regulatory Commission

[Docket No. ER97–1629–000]

Boston Edison Company; Notice of Filing

April 2, 1997.

Take notice that on March 18, 1997, Boston Edison Company tendered for filing a Certificate of Concurrence in the above-referenced docket.

Any person desiring to be heard or to protest said filing should file a motion to intervene or protest with the Federal Energy Regulatory Commission, 888 First Street, NE., Washington, DC 20426, in accordance with Rules 211 and 214 of the Commission's Rules of Practice and Procedure (18 CFR 385.211 and 18 CFR 385.214). All such motions or protests should be filed on or before April 15, 1997. Protests will be considered by the Commission in determining the appropriate action to be taken, but will not serve to make protestants parties to the proceeding. Any person wishing to become a party must file a motion to intervene. Copies of this filing are on file with the Commission and are available for public inspection.

Lois D. Cashell,

Secretary.

[FR Doc. 97–8884 Filed 4–7–97; 8:45 am]

BILLING CODE 6717–01–M

DEPARTMENT OF ENERGY

Federal Energy Regulatory Commission

[Docket No. RP97–302–000]

CNG Transmission Corporation; Notice of Proposed Changes in FERC Gas Tariff

April 2, 1997.

Take notice that on March 31, 1997, CNG Transmission Corporation (CNG), tendered for filing as part of its FERC Gas Tariff, Second Revised Volume No. 1, the following tariff sheets, with an effective date of May 1, 1997:

Twenty-Sixth Revised Sheet No. 32
Twenty-Sixth Revised Sheet No. 33

CNG states that the purpose of this filing is to submit CNG's quarterly revision of the Section 18.2.B. Surcharge, effective for the three-month period commencing May 1, 1997. The charge for the quarter ending April 30, 1997 has been $0.0119 per Dt, as authorized by Commission order dated January 27, 1997 in Docket No. RP97–213. CNG's proposed Section 18.2.B. surcharge for the next quarterly period is $0.0210 per Dt. The revised surcharge is designed to recover $127,460 in Stranded Account No. 858 Costs, which CNG incurred for the period of December, 1996, through February, 1997.

CNG states that copies of this letter of transmittal and enclosures are being mailed to CNG's customers and interested state commissions.

Any person desiring to be heard or to protest this filing should file a motion to intervene or protest with the Federal Energy Regulatory Commission, 888 First Street, N.E., Washington, DC, 20426, in accordance with Sections 385.214 and 385.211 of the Commission's Rules and Regulations. All such motions or protests must be filed in accordance with Section 154.210 of the Commission's Regulations. Protests will be considered by the Commission in determining the appropriate action to be taken, but will not serve to make protestants parties to the proceeding. Any person wishing to become a party must file a motion to intervene. Copies of this filing are on file with the Commission and are available for public inspection in the Public Reference Room.

Lois D. Cashell,

Secretary.

[FR Doc. 97–8892 Filed 4–7–97; 8:45 am]

BILLING CODE 6717–01–M

DEPARTMENT OF ENERGY

Federal Energy Regulatory Commission

[Docket No. RP97–32–003]

Eastern Shore Natural Gas Company; Notice of Proposed Changes in FERC Gas Tariff

April 2, 1997.

Take notice that on March 28, 1997, Eastern Shore Natural Gas Company (ESNG) tendered for filing as part of its FERC Gas Tariff, First Revised Volume No. 1, certain revised tariff sheets in the above captioned docket, with a proposed effective date of April 14, 1997.

ESNG states the revised tariff sheets are being filed to implement ESNG's jurisdictional rate increase filed in Docket No. RP97–32–000 and suspended by the Commission's order issued November 14, 1996 until April 14, 1997. ESNG further states that such revised tariff sheets have been adjusted to reflect the changes in ESNG's underlying purchased gas costs, Account No. 858 costs, and costs for storage services provided by others which have occurred since ESNG filed its general rate increase on October 15, 1996.

ESNG states that copies of the filing have been served upon its jurisdictional customers and interested State Commissions.

Any person desiring to protest said filing should file a protest with the Federal Energy Regulatory Commission, 888 First Street, N.E., Washington, D.C. 20426, in accordance with Rule 211 of the Commission's Rules of Practice and Procedure (18 CFR Section 385.211). All such protests must be filed as provided in Section 154.210 of the Regulations. Protests will be considered by the Commission in determining the appropriate action to be taken, but will not serve to make protestants parties to the proceeding. Copies of this filing are on file with the Commission and are available for public inspection in the Public Reference Room.

Lois D. Cashell,

Secretary.

[FR Doc. 97–8888 Filed 4–7–97; 8:45 am]

BILLING CODE 6717–01–M

DEPARTMENT OF ENERGY

Federal Energy Regulatory Commission

[Docket Nos. TQ97–5–23–000 and TM97–11–23–000]

Eastern Shore Natural Gas Company; Notice of Proposed Changes in FERC Gas Tariff

April 2, 1997.

Take notice that on March 31, 1997, Eastern Shore Natural Gas Company (ESNG) tendered for filing as part of its FERC Gas Tariff, First Revised Volume No. 1, certain revised tariff sheets in the above captioned docket, with a proposed effective date of May 1, 1997.

ESNG states the revised tariff sheets are being filed pursuant to Section 21 and Section 23 of the General Terms and Conditions of ESNG's Gas Tariff to reflect changes in ESNG's jurisdictional sales rates. The sales rates set forth on the revised tariff sheets reflect a decrease of $0.1047 per dt in the Demand Charge and a decrease of $0.5282 per dt in the Commodity Charge, as measured against ESNG's corresponding sales rates in Docket No. RP97–32–000 as filed on October 15, 1996 and suspended until April 14, 1997 by the Commission's order dated November 14, 1996.

ESNG states that copies of the filing have been served upon its jurisdictional customers and interested State Commissions.

Any person desiring to be heard or to protest said filing should file a motion to intervene or protest with the Federal Energy Regulatory Commission, 888 First Street, N.E., Washington, D.C. 20426, in accordance with Rule 211 and Rule 214 of the Commission's Rules of Practice and Procedure (18 CFR Section 385.211 and Section 385.214). All such motions or protests must be filed as provided in Section 154.210 of the Regulations. Protests will be considered by the Commission in determining the appropriate action to be taken, but will not serve to make protestants parties to the proceeding. Any person wishing to become a party must file a motion to intervene. Copies of this filing are on file with the Commission and are available for public inspection.

Lois D. Cashell,

Secretary.

[FR Doc. 97–8896 Filed 4–7–97; 8:45 am]

BILLING CODE 6717–01–M

DEPARTMENT OF ENERGY

Federal Energy Regulatory Commission

[Docket No. ER94–968–017]

Electric Clearinghouse, Inc.; Notice of Filing

April 2, 1997.

Take notice that on March 17, 1997, Electric Clearinghouse, Inc. tendered for filing a Notification of Change in Status.

Lois D. Cashell,

Secretary.

[FR Doc. 97–8883 Filed 4–7–97; 8:45 am]

BILLING CODE 6717–01–M

DEPARTMENT OF ENERGY

Federal Energy Regulatory Commission

[Docket No. ER97–2113–000]

EPEM Marketing Company; Notice of Filing

April 2, 1997.

Take notice that on March 13, 1997, EPEM Marketing Company tendered for filing a Notice of Succession in the above-referenced docket.

Any person desiring to be heard or to protest said filing should file a motion to intervene or protest with the Federal Energy Regulatory Commission, 888 First Street, N.E., Washington, D.C. 20426, in accordance with Rules 211 and 214 of the Commission's Rules of Practice and Procedure (18 CFR 385.211 and 18 CFR 385.214). All such motions or protests should be filed on or before April 15, 1997. Protests will be considered by the Commission in determining the appropriate action to be taken, but will not serve to make protestants parties to the proceeding. Any person wishing to become a party must file a motion to intervene. Copies of this filing are on file with the Commission and are available for public inspection.

Lois D. Cashell,

Secretary.

[FR Doc. 97–8886 Filed 4–7–97; 8:45 am]

BILLING CODE 6717–01–M

DEPARTMENT OF ENERGY

Federal Energy Regulatory Commission

[Docket No. ER97–1935–000]

Florida Power & Light Company; Notice of Filing

April 2, 1997.

Take notice that on March 5, 1997, Florida Power & Light Company tendered for filing an amendment in the above-referenced docket.

Any person desiring to be heard or to protest said filing should file a motion to intervene or protest with the Federal Energy Regulatory Commission, 888 First Street, N.E., Washington, D.C. 20426, in accordance with Rules 211 and 214 of the Commission's Rules of Practice and Procedure (18 CFR 385.211 and 18 CFR 385.214). All such motions or protests should be filed on or before April 15, 1997. Protests will be considered by the Commission in determining the appropriate action to be taken, but will not serve to make protestants parties to the proceeding. Any person wishing to become a party must file a motion to intervene. Copies of this filing are on file with the Commission and are available for public inspection.

Lois D. Cashell,

Secretary.

[FR Doc. 97–8885 Filed 4–7–97; 8:45 am]

BILLING CODE 6717–01–M

DEPARTMENT OF ENERGY

Federal Energy Regulatory Commission

[Docket No. TM97–1–130–000]

Gas Transport, Inc.; Notice of Proposed Changes in FERC Gas Tariff

April 2, 1997.

Take notice that on March 28, 1997, GTI tendered for filing as part of its FERC Gas Tariff, Second Revised Volume No. 1, First Revised Sheet No. 5, with a proposed effective date of April 1, 1997.

GTI states that the purpose of this filing is to state the Annual Charge Adjustment (ACA) unit surcharge authorized by the Federal Energy Regulatory Commission for Fiscal 1997 is $.0023 per Mcf, or $.0023 per Dth when converted to GTI's measurement basis.

GTI further states that copies of this filing were served on GTI's jurisdictional customers and on the interested State Commissions.

Any person desiring to be heard or to protest said filing should file a motion to intervene or protest with the Federal Energy Regulatory Commission, 888 First Street, N.E., Washington, D.C., 20426, in accordance with Section 385.214 or 385.211 of the Commission's Rules of Practice and Procedure. All such motions or protests must be filed in accordance with Section 154.210 of the Commission's Regulations. Protests will be considered by the Commission in determining the appropriate action to be taken but will not serve to make protestants parties to the proceeding. Any person wishing to become a party must file a motion to intervene. Copies of this filing are on file with the Commission and are available for public inspection.

Lois D. Cashell,

Secretary.

[FR Doc. 97–8894 Filed 4–7–97; 8:45 am]

BILLING CODE 6717–01–M

DEPARTMENT OF ENERGY

Federal Energy Regulatory Commission

[Docket No. RP97–55–004]

Great Lakes Gas Transmission Limited Partnership; Notice of Proposed Changes in FERC Gas Tariff

April 2, 1997.

Take notice that on March 31, 1997, Great Lakes Gas Transmission Limited Partnership (Great Lakes) tendered for filing the following tariff sheets, proposed to become effective June 1, 1997:

Second Revised Volume No. 1

Fourth Revised Sheet No. 4
Third Revised Sheet No. 4A
Third Revised Sheet No. 5
Third Revised Sheet No. 9
Third Revised Sheet No. 53
Second Revised Sheet No. 53
Third Revised Sheet No. 59
First Revised Sheet No. 59A
Third Revised Sheet No. 60

Original Volume No. 2

Sixteenth Revised Sheet No. 223
Sixteenth Revised Sheet No. 245
Tenth Revised Sheet No. 269
Sixteenth Revised Sheet No. 294
Eleventh Revised Sheet No. 603
Eighth Revised Sheet No. 604

Great Lakes states that these tariff sheets are being filed to replace those previously filed in the above proceeding and which Great Lakes requested be held in abeyance in a letter dated February 28, 1997. The abeyance was requested until Great Lakes received approval of tariff sheets filed in two proceedings distinct from the one named above.

Any person desiring to protest said filing should file a protest with the Federal Energy Regulatory Commission, 888 First Street, NE., Washington, DC 20426, in accordance with section 385.211 of the Commission's Rules and Regulations. All such protests must be filed as provided in section 154.210 of the Commission's Regulations. Protests will be considered by the Commission in determining the appropriate action to be taken, but will not serve to make protestants parties to the proceeding. Copies of this filing are on file with the Commission and are available for public inspection in the Commission's Public Reference Room.

Lois D. Cashell,

Secretary.

[FR Doc. 97–8889 Filed 4–7–97; 8:45 am]

BILLING CODE 6717–01–M

DEPARTMENT OF ENERGY

Federal Energy Regulatory Commission

[Docket No. EL97–33–000]

New Hampshire Electric Cooperative, Inc. v. New Hampshire Public Service Company; Notice of Filing

April 2, 1997.

Take notice that on March 26, 1997, the New Hampshire Electric Cooperative, Inc. (Cooperative) tendered for filing a complaint against the New Hampshire Public Service Company (PSNH) stating that PSNH has been charging the Cooperative, under an adjustment clause of the parties' wholesale requirements contract, for environmental compliance costs that have been found by the New Hampshire Public Utilities Commission as not economical and possibly imprudent.

Any person desiring to be heard or to protest said filing should file a motion to intervene or protest with the Federal Energy Regulatory Commission, 888 First Street, N.E., Washington, D.C. 20426, in accordance with Rules 211 and 214 of the Commission's Rules of Practice and Procedure (18 CFR 385.211 and 18 CFR 385.214). All such motions or protests should be filed on or before April 18, 1997. Protests will be considered by the Commission in determining the appropriate action to be taken, but will not serve to make protestants parties to the proceeding. Any person wishing to become a party must file a motion to intervene. Copies of this filing are on file with the Commission and are available for public inspection. Answers to the complaint

should be filed on or before April 18, 1997.

Lois D. Cashell,

Secretary.

[FR Doc. 97–8882 Filed 4–7–97; 8:45 am]

BILLING CODE 6717–01–M

DEPARTMENT OF ENERGY

Federal Energy Regulatory Commission

[Docket No. EC97–24–000]

NorAm Energy Services, Inc., Notice of Filing

April 2, 1997.

Take notice that NorAm Energy Services, Inc. (NES) on March 27, 1997, tendered for filing pursuant to Section 203 of the Federal Power Act (the ''FPA''), 16 U.S.C. 824b, Part 33 of the Commission's Regulations, 18 CFR 33, and 18 CFR 2.26, an Application For Authorization Under Section 203.

Applicant states that the Application relates to an Agreement and Plan of Merger dated as of August 11, 1996, pursuant to which Applicant's parent, NorAm Energy Corp., will be acquired by Houston Industries Incorporated (''HI''). As a result of the transaction, the Applicant, a Commission-regulated power marketer, will become a second tier subsidiary of HI. Applicant notes that the transaction will not result in any disposition or transfer of its power sales agreements and that Applicant will continue to hold and perform such agreements. The Applicant states that it has submitted the information required by part 33 of the Commission's Regulations, and by the Commission's recently issued Merger Policy Statement, Order No. 592, Inquiry Concerning the Commission's Merger Policy under the Federal Power Act, Policy Statement, issued December 18, 1996, 61 FR 68,595 (December 30, 1996), in support of the Application.

As required by 18 CFR 33.6, Applicant states that copies of the Application and related testimony and exhibits have been served on the Arkansas Public Service Commission, the Mississippi Public Service Commission, the Minnesota Public Utilities Commission, the Oklahoma Corporation Commission, the Louisiana Public Service Commission, the Texas Railroad Commission and the Texas Public Utility Commission.

Any person desiring to be heard or to protest said filing should file a motion to intervene or protest with the Federal Energy Regulatory Commission, 888 First Street, N.E., Washington, D.C. 20426, in accordance with Rules 211 and 214 of the Commission's Rules of Practice and Procedure (18 CFR 385.211 and 18 CFR 385.214). All such motions or protests should be filed on or before May 27, 1997. Protests will be considered by the Commission in determining the appropriate action to be taken, but will not serve to make protestants parties to the proceeding. Any person wishing to become a party must file a motion to intervene. Copies of this filing are on file with the Commission and are available for public inspection.

Lois D. Cashell,

Secretary.

[FR Doc. 97–8880 Filed 4–7–97; 8:45 am]

BILLING CODE 6717–01–M

DEPARTMENT OF ENERGY

Federal Energy Regulatory Commission

[Docket No. CP97–289–000]

NorAm Gas Transmission Company; Notice of Request Under Blanket Authorization

April 2, 1997.

Take notice that on March 13, 1997, NorAm Gas Transmission Company (NGT), 1600 Smith Street, Houston, Texas 77002, filed in Docket No. CP97–289–000 a request pursuant to Sections 157.205 and 157.216 of the Commission's Regulations under the Natural Gas Act (18 CFR 157.205, 157.216) for authorization to abandon certain facilities in Kansas under NGT's blanket certificate issued in Docket No CP82–384–000, *et al.*, pursuant to Section 7 of the Natural Gas Act, all as more fully set forth in the request that is on file with the Commission and open to public inspection.

NGT proposes to abandon a tap and metering facilities no longer needed due to the City of Winfield Gas Utility's (Winfield) expansion of its distribution system. The facilities, Rural Extension No. 671, to be abandoned consist of a 1-inch tap and 2-inch U-Shape meter station located in Cowley County, Kansas. NGT states that Winfield has requested that NGT disconnect the meter since Winfield's customers are now served by its own distribution system and that no customers or services will be abandoned.

Any person or the Commission's staff may, within 45 days after issuance of the instant notice by the Commission, file pursuant to Rule 214 of the Commission's Procedural Rules (18 CFR 385.214) a motion to intervene or notice of intervention and pursuant to Section 157.205 of the Regulations under the Natural Gas Act (18 CFR 157.205) a protest to the request. If no protest is filed within the time allowed therefor, the proposed activity shall be deemed to be authorized effective the day after the time allowed for filing a protest. If a protest is filed and not withdrawn within 30 days after the time allowed for filing a protest, the instant request shall be treated as an application for authorization pursuant to Section 7 of the Natural Gas Act.

Lois D. Cashell,

Secretary.

[FR Doc. 97–8878 Filed 4–7–97; 8:45 am]

BILLING CODE 6717–01–M

DEPARTMENT OF ENERGY

Federal Energy Regulatory Commission

[Docket No. CP97–311–000]

Northern Natural Gas Company; Notice of Request Under Blanket Authorization

April 2, 1997.

Take notice that on March 31, 1997, Northern Natural Gas Company (Northern), 1111 South 103rd Street, Omaha, Nebraska 68103–0330, filed a request with the Commission in Docket No. CP97–311–000, pursuant to Sections 157.205, and 157.216(b) of the Commission's Regulations under the Natural Gas Act (NGA) for authorization to abandon and remove a small volume measuring station and appurtenant facilities, located in Lancaster County, Nebraska authorized in blanket certificate issued in Docket No. CP82–401–000, all as more fully set forth in the request on file with the Commission and open to public inspection.

Northern proposes to abandon and remove the Wanek Farm Tap and appurtenant facilities. Northern states the station is no longer required because gas service is now provided to the new delivery point, Wanek #1 TBS, which is located near Crete, Nebraska.

Any person or the Commission's staff may, within 45 days after the Commission has issued this notice, file pursuant to Rule 214 of the Commission's Procedural Rules (18 CFR 385.214) a motion to intervene or notice of intervention and pursuant to Section 157.205 of the Regulations under the NGA (18 CFR 157.205) a protest to the request. If no protest is filed within the allowed time, the proposed activity shall be deemed to be authorized effective the day after the time allowed for filing a protest. If a protest is filed and not withdrawn within 30 days after the time allowed for filing a protest, the

instant request shall be treated as an application for authorization pursuant to Section 7 of the NGA.

Lois D. Cashell,

Secretary.

[FR Doc. 97–8879 Filed 4–7–97; 8:45 am]

BILLING CODE 6717–01–M

DEPARTMENT OF ENERGY

Federal Energy Regulatory Commission

[Docket No. EG97–48–000]

NRGenerating Holdings (No. 4) B.V.; Notice of Amended Application of NRGenerating Holdings (No. 4) B.V. for Expedited New Determination of Exempt Wholesale Generator Status

April 2, 1997.

On March 31, 1997, NRGenerating Holdings (No. 4) B.V. (''Applicant'') applied for a new determination that it will be an ''exempt wholesale generator'' (''EWG'') within the meaning of Section 32(a)(1) of PUHCA (the ''Application''). On April 2, 1997, Applicant amended (the ''Amended Application'') its initial application to submit additional information. As stated in the Application and the Amended Application, Applicant has joined a consortium which intends, by April 17, 1997, to submit a bid to purchase all of the shares and assets of Loy Yang Power Corporation Ltd. (''Loy Yang A''), currently wholly-owned by the State of Victoria, Australia. Loy Yang A owns an electric generating facility (the ''Facility'') and an adjacent coal mine located in Victoria, Australia. Loy Yang A would also serve as the primary operator of the Facility, although it will subcontract or assign certain aspects of its responsibilities as operator to affiliates or subsidiaries of various consortium members. If the consortium's bid is successful, Applicant, through one or more affiliates, will become an owner and operator of the Facility.

Any person desiring to be heard concerning the application for exempt wholesale generator status should file a motion to intervene or comments with the Federal Energy Regulatory Commission, 888 First Street N.E., Washington, D.C. 20426, in accordance with Rules 211 and 214 of the Commission's Rules of Practice and Procedure (18 CFR 385.211 and 18 CFR 385.214). The Commission will limit its consideration of comments to those that concern the adequacy or accuracy of the application. All such motions and comments should be filed on or before April 14, 1997, and must be served on the Applicant. Any person wishing to become a party must file a motion to intervene. Copies of this filing are on file with the Commission and are available for public inspection.

Lois D. Cashell,

Secretary.

[FR Doc. 97–8881 Filed 4–7–97; 8:45 am]

BILLING CODE 6717–01–M

DEPARTMENT OF ENERGY

Federal Energy Regulatory Commission

[Docket No. EG97–49–000]

NRGenerating Holdings (No. 3) B.V.; Notice of Application For Expedited New Determination of Exempt Wholesale Generator Status

April 2, 1997.

On April 2, 1997, NRGenerating Holdings (No. 3) B.V. (''Applicant'') applied for a new determination that it will be an ''exempt wholesale generator'' within the meaning of Section 32(a)(1) of PUHCA. An affiliate of Applicant (NRGenerating Holdings (No. 4) B.V.) has joined with others in forming a new consortium entitled ''Horizon Energy Partnership,'' which intends, by April 17, 1997, to submit a bid as an unincorporated joint venture to purchase all of the shares and assets of Loy Yang Power Corporation Ltd. (''Loy Yang A''), currently wholly-owned by the State of Victoria, Australia. Loy Yang A owns an electric generating facility (the ''Facility''), as well as certain other assets. Under Horizon's proposal, Loy Yang A will continue to serve as the operator of the Facility. But certain aspects of the operation and maintenance of the Loy Yang A Power Station would be subcontracted to a joint venture company to be owned in part by Applicant. Thus, if Horizon's bid is successful, Applicant, indirectly through an affiliate, will become an operator of the Facility.

Any person desiring to be heard concerning the application for exempt wholesale generator status should file a motion to intervene or comment with the Federal Energy Regulatory Commission, 888 First Street N.E., Washington, D.C. 20426, in accordance with Rules 211 and 214 of the Commission's Rules of Practice and Procedure (18 CFR 385.211 and 18 CFR 385.214). The Commission will limit its consideration of comments to those that concern the adequacy or accuracy of the application. All such motions and comments should be filed on or before April 14, 1997, and must be served on the Applicant. Any person wishing to become a party must file a motion to intervene. Copies of this filing are on file with the Commission and are available for public inspection.

Lois D. Cashell,

Secretary.

[FR Doc. 97–8920 Filed 4–7–97; 8:45 am]

BILLING CODE 6717–01–M

DEPARTMENT OF ENERGY

Federal Energy Regulatory Commission

[Docket No. RP97–301–000]

Overthrust Pipeline Company; Notice of Tariff Filing

April 2, 1997.

Take notice that on March 28, 1997, Overthrust Pipeline Company (Overthrust) tendered for filing and acceptance tariff sheets to Original Volume No. 1 and First Revised Volume No. 1–A of its FERC Gas Tariff to implement revised base rates, to be effective May 1, 1997. This filing is a general rate case under Section 4(e) of the Natural Gas Act and is consistent with the terms of Overthrust's last settlement in Docket No. RP94–104. Overthrust tendered for filing and acceptance the following tariff sheets to its FERC Gas Tariff:

Original Volume No. 1

Seventeenth Revised Sheet No. 6

First Revised Volume No. 1–A

Second Revised Sheet No. 4

Overthrust states that the rates it has proposed are based on the overall cost of service for the base period consisting of the twelve months ended December 31, 1996, adjusted for known and measurable changes through September 30, 1997, which justifies an increase in Overthrust's jurisdictional transportation revenues of approximately $6.0 million over Overthrust's currently effective rates approved by Commission order dated October 24, 1994, in Docket No. RP94–104.

Overthrust states that the increase in jurisdictional rates reflected in its filing is necessary to permit Overthrust the opportunity to recover its revenue requirement. Overthrust requests an effective date of May 1, 1997, for the tendered tariff sheets.

Overthrust further states that a copy of this filing has been served upon Overthrust's jurisdictional customers and the Wyoming Public Service Commission.

Any person desiring to be heard or protest said filing should file a motion to intervene or protest with the Federal Energy Regulatory Commission, 888 First Street, N.E., Washington, D.C. 20426, in accordance with Rules 385.211 and 385.214 of the Commission's Rules of Practice and Procedure (18 CFR Sections 385.211 and 385.214). All such motions or protests must be filed in accordance with Section 154.210 of the Commission's Regulations. Protests will be considered by the Commission in determining the appropriate action to be taken, but will not serve to make protestants parties to the proceeding. Copies of this filing are on file with the Commission and are available for public inspection.

Lois D. Cashell,

Secretary.

[FR Doc. 97–8891 Filed 4–7–97; 8:45 am]

BILLING CODE 6717–01–M

DEPARTMENT OF ENERGY

Federal Energy Regulatory Commission

[Docket No. TM97–4–28–000]

Panhandle Eastern Pipe Line Company; Notice of Proposed Changes in FERC Gas Tariff

April 2, 1997.

Take notice that on March 31, 1997, Panhandle Eastern Pipe Line Company (Panhandle) tendered for filing as part of its FERC Gas Tariff, First Revised Volume No. 1, the tariff sheets listed on Appendix A to the filing, to become effective May 1, 1997.

Panhandle states that this filing is made in accordance with Section 25 (Flow Through of Cash-Out Revenues In Excess of Costs and Scheduling Charges Assessed Against Affiliates) of the General Terms and Conditions in Panhandle's FERC Gas Tariff, First Revised Volume No. 1. The revised tariff sheets filed herewith reflect the following changes to Panhandle's currently effective Maximum Reservation Rates under Rate Schedules FT, EFT, LFT and SCT, and currently effective Maximum commodity rates under Rate Schedules IT and EIT:

(1) A (.02) per Dt. reduction from the Base Reservation Rate for each of the Gathering Charge Rate, Field Zone Transmission Charge Rate and Market Zone Access Charge Rate under Rate Schedules FT, EFT and LFT;

(2) A (.13¢) reduction from the Base Rate per Dt. for each of the Gathering Charge Rate, Field Zone Transmission Charge Rate and Market Zone Access Charge Rate under Rate Schedule SCT; and

(3) A (.07¢) reduction from the Base Rate per Dt. for each of the Gathering Charge Rate, Field Zone Transmission Charge Rate and Market Zone Access Charge Rate under Rate Schedules IT and EIT.

Panhandle states that copies of this filing are being served on all affected customers and applicable state regulatory agencies.

Any person desiring to be heard or to protest this filing should file a motion to intervene or protest with the Federal Energy Regulatory Commission, 888 First Street, N.E., Washington, D.C. 20426, in accordance with Sections 385.214 and 385.211 of the Commission's Rules and Regulations. All such motions or protests must be filed in accordance with Section 154.210 of the Commission's Regulations. Protests will be considered by the Commission in determining the appropriate action to be taken, but will not serve to make protestants parties to the proceeding. Any person wishing to become a party must file a motion to intervene. Copies of this filing are on file with the Commission and are available for public inspection in the Public Reference Room.

Lois D. Cashell,

Secretary.

[FR Doc. 97–8895 Filed 4–7–97; 8:45 am]

BILLING CODE 6717–01–M

DEPARTMENT OF ENERGY

Federal Energy Regulatory Commission

[Docket No. RP97–303–000]

Tennessee Gas Pipeline Company; Notice of Petition for Waiver

April 2, 1997.

Take notice that on March 31, 1997, Tennessee Gas Pipeline Company (Tennessee) tendered for filing a request for a waiver of the Commission's regulations and Tennessee's tariff as necessary to permit Tennessee to continue, for an additional three month period beginning May 1, 1997 through July 31, 1997, to collect the gas supply realignment (GSR) surcharge currently in effect under tariff sheets accepted in Docket No. RP97–200.

Tennessee states that the purpose of the filing is to recover GSR costs paid, or known and measurable, at the time of this filing, at the same surcharge level as the currently effective GSR surcharges and in a manner consistent with Section XXVI of the General Terms and Conditions of Tennessee's Fifth Revised FERC Gas Tariff.

Alternatively, in the event that the requested waivers are not granted, Tennessee submitted as part of its Fifth Revised FERC Gas Tariff the following tariff sheets to be effective May 1, 1997:

Fifteenth Revised Sheet No. 20
Fourteenth Revised Sheet No. 23
Ninth Revised Sheet No. 23B
Fifteenth Revised Sheet No. 26B

Because the five month amortization period applicable to Tennessee's GSR surcharges Docket No. RP97–200 is due to terminate on June 30, 1997—two months into the quarter covered by this filing, Tennessee is also filing herewith an original and five copies of a second set of the following tariff sheets to be effective July 1, 1997:

Sixteenth Revised Sheet No. 20
Fifteenth Revised Sheet No. 23
Tenth Revised Sheet No. 23B
Sixteenth Revised Sheet No. 26B

Tennessee states that the tariff sheets to become effective July 1, 1997 are identical to those to become effective May 1, 1997 except for a single item. The May 1, 1997 set of tariff sheets provide for the continued recovery by Tennessee through June 30, 1997 of the RP97–200 $1.39 surcharge (through the end of the five month amortization period for those costs) while the July 1, 1997 set of tariff sheets eliminate the $1.39 surcharge.

Any person desiring to be heard or to protest this filing should file a motion to intervene or protest with the Federal Energy Regulatory Commission, 888 First Street, N.E., Washington, D.C. 20426, in accordance with Sections 385.214 and 385.211 of the Commission's Rules and Regulations. All such motions or protests must be filed on or before April 9, 1997. Protests will be considered by the Commission in determining the appropriate action to be taken, but will not serve to make protestants parties to the proceeding. Any person wishing to become a party must file with the Commission a motion to intervene. Copies of this filing are on file with the Commission and are available for public inspection in the Public Reference Room.

Lois D. Cashell,

Secretary.

[FR Doc. 97–8893 Filed 4–7–97; 8:45 am]

BILLING CODE 6717–01–M

DEPARTMENT OF ENERGY

Federal Energy Regulatory Commission

[Project No. 11499–000 Tennessee]

Armstrong Energy Resources; Notice of Extension of Time to File Scoping Comments

April 2, 1997.

The Federal Energy Regulatory Commission (FERC) and Tennessee Valley Authority (TVA) jointly conducted a second public scoping meeting for Armstrong Energy Resources' revised proposal on March 4, 1997. At that meeting, and in the revised scoping document I and notice of public scoping meeting, issued February 3, 1997, FERC and TVA set the deadline date for filing comments in response to the revised scoping document I at March 31, 1997.

By this notice, the deadline date for filing comments in response to revised scoping document I is extended to April 30, 1997. Any comments previously expressed on scoping document I will be considered and need not be repeated.

Scoping comments are to be filed with the Secretary, Federal Energy Regulatory Commission, 888 First Street, NE., Washington, DC 20426, and with Linda Oxendine, Senior Specialist, Tennessee Valley Authority, 400 West Summit Hill Drive, WT8C–K, Knoxville, TN 37902. All written correspondence should clearly show the following captions on the first page: Laurel Branch Pumped Storage Project, FERC Project No. 11499–000.

FOR FURTHER INFORMATION, please contact Eddie R. Crouse, FERC, (202) 219–2794, or Linda Oxendine, TVA, (423) 632–3440.

Lois D. Cashell,

Secretary.

[FR Doc. 97–8887 Filed 4–7–97; 8:45 am]

BILLING CODE 6717–01–M

DEPARTMENT OF ENERGY

Western Area Power Administration

Notice of Public Information/Comment Meetings on Proposal to Extend Electric Power Resource Commitments to Contractors of the Salt Lake City Area Integrated Projects by Application of the Energy Planning and Management Program Power Marketing Initiative

AGENCY: Western Area Power Administration, DOE.

ACTION: Notice of meetings.

SUMMARY: Western Area Power Administration (Western) published its proposal to apply the Energy Planning and Management Program Power Marketing Initiative to the Salt Lake City Area Integrated Projects on February 26, 1997 (62 FR 8709). At that time, Western stated that four public information/comment meetings would be held. These meetings have now been scheduled.

DATES: Information comment meetings will be held:

1. April 16, 1997, 1:30 p.m., Sandy, Utah
2. April 23, 1997, 9 a.m., Golden, Colorado
3. April 24, 1997, 9 a.m., Albuquerque, New Mexico
4. April 25, 1997, 9 a.m., Phoenix, Arizona

ADDRESSES: The locations of the meetings are:

1. Sandy—Utah Associated Municipal Power Systems, 8722 South 300 West, Sandy, Utah.
2. Golden—Marriott Denver West, 1717 Denver West Boulevard, Golden, Colorado
3. Albuquerque—United States Department of Energy, Albuquerque Operations Office Training Complex, 1401 Maxwell Street, Kirtland Air Force Base West, Albuquerque, New Mexico
4. Phoenix—Western Area Power Administration, Desert Southwest Region, 615 South 43rd Avenue, Phoenix, Arizona.

SUPPLEMENTARY INFORMATION: Western will accept written comments on or before May 27, 1997. Comments may be submitted to: Mr. Dave Sabo, Colorado River Storage Project Manager, Western Area Power Administration, P.O. Box 11606, Salt Lake City, UT 84147–0606.

Issued at Golden, Colorado, March 27, 1997.

J. M. Shafer,

Administrator.

[FR Doc. 97–8931 Filed 4–7–97; 8:45 am]

BILLING CODE 6450–01–P

ENVIRONMENTAL PROTECTION AGENCY

[FRL–5806–1]

Michigan: Final Determination of Adequacy of State Municipal Solid Waste Landfill Permit Program

AGENCY: Environmental Protection Agency.

ACTION: Notice of final determination of adequacy for Michigan's amended application.

SUMMARY: Section 4005(c)(1)(B) of the Resource Conservation and Recovery Act (RCRA), as amended by the Hazardous and Solid Waste Amendments (HSWA) of 1984, requires States to develop and implement permit programs to ensure that municipal solid waste landfills (MSWLFs) which may receive household hazardous waste or small quantity generator waste will comply with the revised Federal MSWLF Criteria (40 CFR part 258). RCRA section 4005(c)(1)(C) requires the United States Environmental Protection Agency (U.S. EPA) to determine whether States have adequate ''permit'' programs for MSWLFs, but does not mandate issuance of a rule governing such determinations. The U.S. EPA has proposed a State/Tribal Implementation Rule (SIR) (61 FR 2584, January 26, 1996) that provides procedures by which the U.S. EPA will approve, or partially approve, State landfill permit programs. The Agency intends to approve adequate State MSWLF permit programs as applications are submitted. Thus, these approvals are not dependent on final promulgation of the SIR. Prior to final promulgation of the SIR, adequacy determinations will be made based on statutory authorities and requirements. In addition, States may use the proposed SIR as an aid in interpreting these requirements. The Agency believes that early approvals have an important benefit. Approved State permit programs provide for interaction between the State and the owner/operator regarding site-specific permit conditions. Only those owners/operators located in States with approved permit programs can use the site-specific flexibility provided by 40 CFR part 258 to the extent the State permit program allows such flexibility.

Michigan applied for a partial program determination of adequacy under Section 4005 of RCRA on October 6, 1993. The U.S. EPA reviewed Michigan's application and made a final partial program determination of adequacy on March 10, 1994 (59 FR 11268, March 10, 1994) for those portions of the MSWLF permit program that were adequate to ensure compliance with the revised Federal MSWLF Criteria. Michigan amended its original application and applied for approval of the remaining portion of its program on March 3, 1997. The U.S. EPA reviewed Michigan's amended application and today is issuing a tentative determination of adequacy for the remaining portion of Michigan's MSWLF permit program relating to financial assurance requirements. Michigan's amended application is

available for public review and comment. The tentative determination will become final and effective sixty (60) days following the date of this publication if no adverse comments are received.

DATES: All comments on Michigan's amended application for a determination of adequacy must be received by the U.S. EPA Region 5 by the close of business on May 8, 1997. The determination of adequacy for Michigan shall be effective on June 9, 1997, unless adverse comments are received. If adverse comments are received, a second **Federal Register** Notice will be published describing these comments and the U.S. EPA's responses to the comments and decision on final adequacy.

ADDRESSES: Copies of Michigan's amended application for a determination of adequacy for the financial assurance requirements are available for inspection and copying from 9 AM to 4 PM during normal working days at the following addresses: Michigan Department of Environmental Quality, Hollister Building—1st Floor, Lansing, Michigan, 48909, Attn: Mr. Jim Sygo; and U.S. EPA Region 5, 77 West Jackson Boulevard, Chicago, Illinois 60604, Attn: Mr. Paul Ruesch, mail code DRP–8J. All written comments should be sent to the U.S. EPA Region 5 Office.

FOR FURTHER INFORMATION CONTACT: U.S. EPA Region 5, 77 West Jackson Boulevard, Chicago, Illinois, 60604 Attn: Mr. Paul Ruesch, mail code DRP–8J, telephone (312) 886–7598.

SUPPLEMENTARY INFORMATION:

A. Background

On October 9, 1991, the U.S. EPA promulgated revised Federal MSWLF Criteria (40 CFR Part 258). Subtitle D of RCRA, as amended by the Hazardous and Solid Waste Amendments of 1984 (HSWA), requires States to develop permitting programs to ensure that facilities comply with the revised Federal Criteria. Subtitle D also requires in section 4005 that the U.S. EPA determine the adequacy of State municipal solid waste landfill permit programs to ensure that facilities comply with the revised Federal MSWLF Criteria. To fulfill this requirement, the Agency has proposed the State/Tribal Implementation Rule (SIR). The rule will specify the requirements which State programs must satisfy to be determined adequate. The U.S. EPA will review the State's requirements to determine whether they are ''adequate'' under section 4005(c)(1)(C) of RCRA.

B. State of Michigan

On October 6, 1993, Michigan submitted an application to obtain a partial program adequacy determination for the State's municipal solid waste landfill permit program. On March 10, 1994, the U.S. EPA published a final determination of adequacy for Michigan's program. Further background on the final partial program determination of adequacy appears at 59 FR 11268, March 10, 1994.

On March 3, 1997, Michigan amended its October 6, 1993, application to apply for approval of the remaining portion of its program, specifically the financial assurance requirements. The amended application includes a description of the changes made to Michigan's MSWLF permit program since the partial program approval.

The U.S. EPA has reviewed Michigan's amended application and has determined that the State's revised MSWLF permit program will satisfy the financial assurance portions of the revised Federal Criteria. Specifically, Michigan has adequately addressed those portions of its MSWLF permit program that were not approved in the partial determination of adequacy in March 1994. The U.S. EPA has determined that the State's revised MSWLF permit program will ensure adequacy with the financial assurance requirements (40 CFR 258.70, 258.71, 258.72, 258.73, 258.74).

C. Decision

After reviewing the amended application, I conclude that Michigan's application for a determination of adequacy for financial assurance requirements meets all of the statutory and regulatory requirements established by Subtitle D of RCRA. Accordingly, the U.S. EPA is granting a determination of adequacy for the portion of Michigan's MSWLF permit program relating to financial assurance requirements.

Section 4005(a) of RCRA provides that citizens may use the citizen suit provisions of section 7002 of RCRA to enforce the revised Federal MSWLF criteria in 40 CFR part 258 independent of any State enforcement program. As the U.S. EPA explained in the preamble to the revised Federal MSWLF Criteria, the U.S. EPA expects that any owner or operator complying with provisions in a State program approved by the U.S. EPA should be considered to be in compliance with the revised Federal MSWLF Criteria. See 56 FR 50978, 50995 (October 9, 1991).

Today's action takes effect 60 days after the date of publication if no adverse comments are received.

The U.S. EPA wishes to note that it presently has pending before it a request, submitted in a letter dated June 14, 1996, by the Michigan Environmental Council (MEC), to revoke Michigan's National Pollution Discharge Elimination System (NPDES) and Prevention of Significant Deterioration (PSD) program approvals, not grant additional program delegations and not grant program approval for Boiler and Industrial Furnace revisions under RCRA. This request is based upon Michigan's recent enactment of Public Act 132 of 1996, which establishes certain environmental audit privilege and immunity provisions in the State's natural resources and environmental protection code. In response to the request, the U.S. EPA is currently in the process of reviewing Public Act 132 of 1996 and its potential impact on Michigan's federally delegated, approved and authorized programs, including RCRA.

The U.S. EPA's proposed action today only addresses Michigan's MSWLF permit program financial assurance requirements. The U.S. EPA's decision to grant Michigan's application for a determination of adequacy for these requirements does not express any viewpoint on the question of whether there are legal deficiencies in Michigan's RCRA program resulting from Public Act 132 of 1996. The U.S. EPA will subsequently address the issues raised by MEC regarding Public Act 132 of 1996 in responding to the MEC request.

Executive Order 12866

The Office of Management and Budget has exempted this action from the requirements of section 6 of Executive Order 12866.

Unfunded Mandates Reform Act

Title II of the Unfunded Mandates Reform Act of 1995 (UMRA), Public Law 104–4, establishes requirements for Federal agencies to assess the effects of their regulatory actions on State, local, and tribal governments and the private sector. Under section 202 of the UMRA, the U.S. EPA generally must prepare a written statement, including a cost-benefit analysis, for proposed and final rules with ''Federal mandates'' that may result in expenditures to State, local, and tribal governments, in the aggregate, or to the private sector, of $100 million or more in any one year.

Today's proposal contains no Federal mandates (under the regulatory provisions of Title II of the UMRA) for State, local, or tribal governments or the private sector. Today's proposal would merely acknowledge the adequacy of a

portion of an existing State program. The U.S. EPA has determined that this proposal would not contain any Federal mandate that may result in expenditures of $100 million or more for State, local, and tribal governments, in the aggregate, or the private sector in any one year. Therefore, today's proposal is not subject to the requirements of section 202 of the UMRA.

Before the U.S. EPA establishes any regulatory requirements that may significantly or uniquely affect small governments, including tribal governments, it must have developed under section 203 of the UMRA a small government agency plan. The plan must provide for notifying potentially affected small governments, enabling officials of affected small governments to have meaningful and timely input in the development of the U.S. EPA regulatory proposals with significant Federal intergovernmental mandates, and informing, educating, and advising small governments on compliance with the regulatory requirements. Because today's proposal would merely acknowledge the adequacy of a portion of an existing approved State program, the U.S. EPA has determined that this proposal contains no regulatory requirements that might significantly or uniquely affect small governments.

Regulatory Flexibility Act

The Regional Administrator today certifies, pursuant to section 605(b) of the RFA, that a determination of adequacy for Michigan's MSWLF permit program financial assurance requirements will not have a significant impact on a substantial number of small entities. It does not impose any new burdens on small entities in the State of Michigan. This rule, therefore, does not require a regulatory flexibility analysis.

Submission to Congress and the General Accounting Office

Under 5 U.S.C. 801(a)(1)(A) as added by the Small Business Regulatory Enforcement Fairness Act of 1996, the U.S. EPA submitted a report containing this rule and other required information to the U.S. Senate, the House of Representatives and the Comptroller General of the General Accounting Office prior to publication of this rule in today's **Federal Register**. This rule is not a ''major rule'' as defined by 5 U.S.C. 804(2).

Authority: This notice is issued under the authority of section 4005 of the Solid Waste Disposal Act as amended; 42 U.S.C. 6946.

Dated: March 28, 1997.

Valdas V. Adamkus,

Regional Administrator.

[FR Doc. 97–8672 Filed 4–7–97; 8:45 am]

BILLING CODE 6560–50–P

ENVIRONMENTAL PROTECTION AGENCY

[FRL–5807–1]

Water Pollution Control; Program Application by North Carolina to Administer the Sludge Management (Biosolids) Program

AGENCY: Environmental Protection Agency (EPA).

ACTION: Notice of application and public comment period.

SUMMARY: Pursuant to 40 CFR 501.31, the State of North Carolina has submitted an application for EPA to approve the existing North Carolina Domestic Waste Permit program for authorization to administer and enforce the federal sewage sludge management (biosolids) program. According to the State's proposal, this program would be administered by the North Carolina Department of Environment, Health and Natural Resources (NCDEHNR).

The application from North Carolina is complete and is available for inspection and copying. Persons wishing to comment upon or object to any aspects of the application from North Carolina or wishing to request a public hearing, are invited to submit the same in writing within thirty (30) days of this notice to the Office of Environmental Assessment, Environmental Protection Agency Region 4, 61 Forsyth Street, S.W., Atlanta, Georgia 30303–3104, ATTENTION: Ms. Lena Scott. The public notice number and reference to the program application by North Carolina to administer the sludge management (biosolids) program should be included in the first page of comments.

FOR FURTHER INFORMATION CONTACT: Mr. Roosevelt Childress, Chief, Surface Water Permits Section, telephone (404) 562–9279, or Mr. Vince Miller, EPA Region 4 Sludge Management Coordinator, telephone (404) 562–9312, or write to the following address: Water Management Division, Surface Water Permits Section, U.S. EPA, Region 4, Atlanta Federal Center, 61 Forsyth Street, S.W., Atlanta, Georgia 30303–3104.

SUPPLEMENTARY INFORMATION: Section 405 of the Clean Water Act (CWA), 33 U.S.C. Section 1345, created the sludge management program, allowing EPA to issue permits for the disposal of sewage sludge under conditions required by the CWA. Section 405(c) of the CWA provides that a state may submit an application to EPA for administering its own program for issuing sewage sludge permits within its jurisdiction. EPA is required to approve each such submitted state program unless EPA determines that the program does not meet the requirements of the EPA regulations implementing those sections.

North Carolina's application for sludge management program approval contains a letter from the Governor requesting program approval, an Attorney General's Statement, copies of pertinent State statutes and regulations, the NCDEHNR Program Description, and a draft NCDEHNR/EPA Memorandum of Agreement (MOA).

Septage

EPA understands that North Carolina's application is not intended to include federal septage management program activities within the State. EPA will retain authority for administering the federal septage management program within the State of North Carolina until such time that the State receives federal authorization.

Indian Tribes

The term ''Indian Tribe'' is defined under the Act as ''any Indian Tribe, band, nation, or other organized group of community, including any Alaskan Native village, which is federally recognized as eligible for the special programs, and services provided by the United States to Indians because of their status as Indians.'' EPA notes that North Carolina's application does not, nor does it intend to, include management of sewage sludge on lands within Indian Country. EPA will retain authority for administering the federal sewage sludge management program within Indian Country.

Availability of State Submittal

North Carolina's submittal may be reviewed by the public from 8:00 a.m. to 4:00 p.m., Monday through Friday, excluding holidays, at the North Carolina Department of Environment, Health, and Natural Resources, Division of Water Quality; 512 North Salisbury Street, Raleigh, North Carolina 27604–1148 or at the EPA Regional Office in Atlanta, Georgia, at the address appearing earlier in this notice.

Copies of the submittal may be obtained at a cost of $0.25 per page by check made payable to the North Carolina Department of Environment,

Health and Natural Resources. Requests for copies should be addressed to Mr. Donald Safrit, North Carolina Department of Environment, Health and Natural Resources at the address provided above or at telephone number (919) 733–5083 ext. 519.

EPA's Decision

After the close of the public comment period, EPA will decide whether to approve or disapprove North Carolina's sludge management program. The decision will be based on the requirements of Section 405 of the CWA and EPA regulations promulgated thereunder.

If the North Carolina program is approved, EPA will so notify the State. Notice will be published in the **Federal Register** and, as of the date of program approval, EPA will suspend issuance of sludge management permits in North Carolina (except, as discussed above, for those dischargers in ''Indian Country''). The State's program will operate in lieu of the EPA-administered program. However, EPA will retain the right, among other things, to object to Sludge permits proposed to be issued by North Carolina and to take enforcement actions for violations.

If EPA disapproves North Carolina's sludge management program, EPA will notify the State of the reasons for disapproval and of any revisions or modifications to the State program that are necessary to obtain approval.

Review Under Regulatory Flexibility Act and Executive Order 12866

Under the Regulatory Flexibility Act, EPA is required to prepare a Regulatory Flexibility Analysis for all rules that may have a significant impact on a substantial number of entities. The proposed approval of the North Carolina sludge management program does not alter the regulatory control over any industrial category. No new substantive requirements are established by this action. Therefore, I hereby certify that because this notice does not have a significant impact on a substantial number of small entities, a Regulatory Flexibility Analysis is not needed.

It has been determined that this rule is not a ''significant regulatory action'' under the terms of Executive Order 12866 and is therefore not subject to the Office of Management and Budget's review.

Dated: March 26, 1997.

A. Stanley Meiburg,

Acting Regional Administrator, Environmental Protection Agency, Region 4.

[FR Doc. 97–8671 Filed 4–7–97; 8:45 am]

BILLING CODE 6560–50–P

FEDERAL COMMUNICATIONS COMMISSION

[CC Docket No. 96–149; DA 97–666]

Comments Requested To Aid Commission in Expedited Reconsideration of Interpretation of Section 272(e)(4)

AGENCY: Federal Communications Commission.

ACTION: Notice.

SUMMARY: The Commission released a Public Notice which establishes a pleading cycle for comments on specific issues relating to the scope and nature of the restrictions imposed by section 272(e)(4). Certain Bell Operating Companies (BOCs) filed a motion with the United States Court of Appeals for the District of Columbia Circuit seeking summary reversal of the Commission's interpretation of section 272(e)(4) in its First Report and Order and Notice of Proposed Rulemaking in this docket (62 FR 2927 (January 21, 1997) and 62 FR 2991 (January 21, 1997)). The Commission asked that it be given the opportunity to reconsider its interpretation since some of the BOC arguments advanced in their motion had not been clearly presented to the Commission in the rulemaking proceeding. On March 31, 1997, the court granted the Commission's request and directed it to reconsider its position within 90 days. The Commission wishes to build a complete record on these issues.

DATES: Comments are due on or before April 17, 1997, and reply comments are due on or before April 24, 1997.

ADDRESSES: Comments and reply comments should be sent to Office of the Secretary, Federal Communications Commission, 1919 M Street, N.W., Room 222, Washington, DC 20554, with a copy to Janice Myles of the Common Carrier Bureau, 1919 M Street, N.W., Room 544, Washington, DC 20554. Parties should also file one copy of any documents filed in this docket with the Commission's copy contractor, International Transcription Services, Inc., 2100 M Street, N.W., Suite 140, Washington, DC 20037.

FOR FURTHER INFORMATION CONTACT: David Ellen, Common Carrier Bureau, Policy and Program Planning Division, (202) 418–1580.

SUPPLEMENTARY INFORMATION:

Synopsis of Public Notice

1. In a recent rulemaking, the Commission construed the scope of section 272(e)(4) of the Communications Act of 1934, as amended by the Telecommunications Act of 1996. The Commission concluded that section 272(e)(4) is not a grant of authority for a Bell Operating Company (BOC) to provide interLATA services prior to receiving section 271 authority. The Commission further concluded that section 272(e)(4) is not a grant of authority for a BOC to provide interLATA services, including wholesale interLATA services provided to its interLATA affiliate, after receiving section 271 authority. Following the rulemaking, certain BOCs filed a motion with the United States Court of Appeals for the District of Columbia Circuit seeking summary reversal of the Commission's interpretation of section 272(e)(4). The Commission responded that, among other things, some of the arguments that the BOCs advanced in their motion for summary reversal had not been clearly presented to the Commission in the rulemaking proceeding. The Commission, therefore, asked that it be given the opportunity to reconsider, in light of these arguments, its interpretation of section 272(e)(4) prior to judicial review of those arguments. On March 31, 1997, the court granted the Commission's request, concluding that ''[t]he merits of the parties' positions are not so clear as to warrant summary action.'' The court noted that it expects that ''the Commission will adhere to its proposal to complete any further proceedings and adopt a revised order within 90 days of the date of this order.''

2. In this Public Notice, to aid the Commission in meeting its commitment to reconsider promptly its interpretation of section 272(e)(4), the Common Carrier Bureau seeks comment on certain specific issues relating to section 272(e)(4). Parties should feel free to address any of the other issues previously addressed before the Commission or the court that are relevant to this inquiry.

3. Section 272(a) states, among other things, that BOCs ''may not provide'' directly ''[o]rigination of [in-region] interLATA telecommunications services.'' Before the court, the BOCs argued that their reading of section 272(e)(4) does not conflict with section 272(a) because when a BOC provides in-region interLATA telecommunications services on a wholesale basis, it does not ''[o]riginat[e]'' such services. We seek comment on what precisely it means to ''originate'' an interLATA telecommunications service. Is ''origination'' strictly a retail concept? Commenting parties should also discuss the legal implications, if any, of the fact that section 271(b)(1), which prohibits a BOC or its affiliate from providing

''interLATA services originating in any of its in-region States'' prior to FCC approval, also uses a form of the term ''originate.''

4. What is the legal significance, if any, of the fact that section 272(e)(4) applies to *intra*LATA services and facilities as well as interLATA services and facilities? Before the court, for example, AT&T argued that the use of the term ''intraLATA'' demonstrates that section 272(e)(4) is not a grant of authority because, among other things, ''a BOC needs no grant of federal statutory authority to provide intraLATA services.''

5. Are the principal concerns that underlie the separate affiliate requirement of section 272—discrimination and cost misallocation by a BOC—less serious in the context of the wholesale provisioning of in-region interLATA services to affiliates than in the context of the direct retail provisioning of such services, at least where, as here, any such provisioning is required to take place in a non-discriminatory manner? If they are less serious, are they nonetheless serious enough to justify, as a policy matter, prohibiting such wholesale provisioning? Of what relevance, if any, is the fact that there was no exception to the interLATA services restriction contained in the Modified Final Judgment for wholesale interLATA services provided on a non-discriminatory basis, or that there presently is no wholesale interLATA services exception to section 271's prohibition on the provision of in-region interLATA services prior to FCC approval? At the same time, of what relevance, if any, is the fact that once a BOC has received section 271 approval and its interLATA affiliate is permitted to provide in-region interLATA services, the 1996 Act also allows the BOC to provide its interLATA affiliate various wholesale services and facilities, such as wholesale access services and wholesale access to unbundled network elements, so long as the BOC does so in a non-discriminatory way and in arm's length transactions? What is the policy justification for not permitting the BOC to provide, in addition, wholesale interLATA services to its affiliate?

6. Does the extent of concern for discrimination and cost misallocation depend, at least in part, on the particular kind of in-region wholesale interLATA service a BOC seeks to offer? For example, does the extent of concern differ depending on whether the wholesale service being offered is a bundled end-to-end interLATA service or a interLATA service that merely transmits traffic from a point of presence in one LATA to a point of presence in another LATA? How would the non-discrimination requirement in section 272(e)(4) apply to these different kinds of wholesale interLATA services? Are there some kinds of services that, in practice, could not be provided in a non-discriminatory manner? In their comments, BOCs should clarify precisely what kind of wholesale interLATA service they would seek to provide, if any, using the excess capacity on their official services networks.

7. Interested parties should file an original and two copies of their comments by April 17, 1997, and reply comments by April 24, 1997, with the Secretary, FCC, 1919 M Street, N.W., Washington, DC 20554. A copy should also be sent to Janice Myles, Common Carrier Bureau, FCC, Room 544, 1919 M Street, N.W., Washington, DC 20554, and to the Commission's contractor for public service records duplication, ITS, Inc., 2100 M Street, N.W., Suite 140, Washington, D. C. 20037. Parties filing comments and reply comments should include the Commission docket number, CC Docket No. 96–149, on their pleadings. Comments and reply comments will be available for public inspection during regular business hours in the FCC Reference Center, Room 239, 1919 M Street, N.W., Washington, D. C. 20554.

8. We will continue to treat this proceeding as non-restricted for purposes of the Commission's *ex parte* rules. See generally 47 CFR 1.1200–1.1216.

Federal Communications Commission.

William F. Caton,

Acting Secretary.

[FR Doc. 97–9047 Filed 4–7–97; 8:45 am]

BILLING CODE 6712–01–U

FEDERAL COMMUNICATIONS COMMISSION

[Report No. 2185]

Petitions for Reconsideration and Clarification of Action in Rulemaking Proceeding

April 2, 1997.

Petitions for reconsideration and clarification have been filed in the Commission's rulemaking proceedings listed in this Public Notice and published pursuant to 47 CFR Section 1.429(e). A full text of these documents are available for viewing and copying in Room 239, 1919 M Street, N.W., Washington, D.C. or may be purchased from the Commission's copy contractor, ITS, Inc. (202) 857–3800. Oppositions to these petitions must be filed April 23, 1997. See Section 1.4(b)(1) of the Commission's rules (47 CFR 1.4(b)(1). Replies to an opposition must be filed within 10 days after the time for filing oppositions has expired.

Subject: The Use of N11 Codes and Other Abbreviated Dialing Arrangements. (CC Docket No. 92–105).

Number of Petitions Filed: 5.

Federal Communications Commission.

William F. Caton,

Acting Secretary.

[FR Doc. 97–8864 Filed 4–7–97; 8:45 am]

BILLING CODE 6712–01–M

FEDERAL MARITIME COMMISSION

Ocean Freight Forwarder License Applicants

Notice is hereby given that the following applicants have filed with the Federal Maritime Commission applications for licenses as ocean freight forwarders pursuant to section 19 of the Shipping Act of 1984 (46 U.S.C. app. 1718 and 46 CFR 510).

Persons knowing of any reason why any of the following applicants should not receive a license are requested to contact the Office of Freight Forwarders, Federal Maritime Commission, Washington, DC. 20573.

CERES Freight Systems, Inc., 26 East Bryan Street, Savannah, GA 31401, Officers: Robert H. Demere, Jr., President, Eugene R. Tompkins, Vice President

World Trade Forwarding Group Corp., 9600 N.W. 25th Street, Suite 2–B, Miami, FL 33172, Officers: Vivian Manrigue-Collantes, President, Salvador C. Collantes, Vice President

Cabell Export, 922 White Marlin Drive, Charleston, SC 29412, Lesley Schoepf Cabell, Sole Proprietor

Robert W. Cisco Custom House Broker, 416 Common Street, Suite 101, New Orleans, LA 70130, Robert William Cisco, Sole Proprietor

Ex-Works Miami Corp., 1360 N.W. 78 Avenue, Miami, FL 33126, Officer: Miriam R. Perez, President

Sea Expo Freight Services, Inc., 32 Somerville Road, Hewitt, NJ 07421, Officer: William T. Murphy

Blanca Company Inc., 913 South Jackson Street, Suite B, Seattle, WA 98104, Officers: Vannara Zou, President, Suke Zou, Chairman

Dated: April 2, 1997.

Joseph C. Polking,

Secretary.

[FR Doc. 97–8870 Filed 4–7–97; 8:45 am]

BILLING CODE 6730–01–M

FEDERAL RESERVE SYSTEM

Change in Bank Control Notices; Acquisitions of Shares of Banks or Bank Holding Companies

The notificants listed below have applied under the Change in Bank Control Act (12 U.S.C. 1817(j)) and § 225.41 of the Board's Regulation Y (12 CFR 225.41) to acquire a bank or bank holding company. The factors that are considered in acting on the notices are set forth in paragraph 7 of the Act (12 U.S.C. 1817(j)(7)).

The notices are available for immediate inspection at the Federal Reserve Bank indicated. Once the notices have been accepted for processing, they will also be available for inspection at the offices of the Board of Governors. Interested persons may express their views in writing to the Reserve Bank indicated for that notice or to the offices of the Board of Governors. Comments must be received not later than April 22, 1997.

A. Federal Reserve Bank of Minneapolis (Karen L. Grandstrand, Vice President) 250 Marquette Avenue, Minneapolis, Minnesota 55480-2171:

1. First Security Bank of Havre Profit Sharing Plan and Trust, Havre, Montanna; to acquire an additional 2.1 percent, for a total of 11.6 percent, of the voting shares of Montana Security, Inc., Havre, Montana, and thereby indirectly acquire First Security Bank of Havre, Havre, Montana.

Board of Governors of the Federal Reserve System, April 2, 1997.

Jennifer J. Johnson,

Deputy Secretary of the Board.

[FR Doc. 97–8902 Filed 4–7–97; 8:45 am]

BILLING CODE 6210–01–F

FEDERAL RESERVE SYSTEM

Change in Bank Control Notices; Formations of, Acquisitions by, and Mergers of Bank Holding Companies; Correction

This notice corrects a notice (FR Doc. 97-8135) published on page 15518 of the issue for Tuesday, April 1, 1997.

On page 15519, under the Federal Reserve Bank of Dallas heading, the entry for BonState Bancshares, Inc., Bonham, Texas, is revised to read as follows:

A. Federal Reserve Bank of Dallas (Genie D. Short, Vice President) 2200 North Pearl Street, Dallas, Texas 75201-2272:

1. BonState Bancshares, Inc., Bonham, Texas, and Bonham Financial Services, Inc., Dover, Delaware; to become bank holding companies by acquiring 100 percent of the voting shares of Bonham State Bank, Bonham, Texas.

Comments on this application must be received by April 25, 1997.

Board of Governors of the Federal Reserve System, April 2, 1997.

Jennifer J. Johnson,

Deputy Secretary of the Board.

[FR Doc. 97–8901 Filed 4–7–97; 8:45 am]

BILLING CODE 6210–01–F

FEDERAL RESERVE SYSTEM

Sunshine Act Meeting

AGENCY HOLDING THE MEETING: Board of Governors of the Federal Reserve System.

TIME AND DATE: 11:00 a.m., Monday, April 14, 1997.

PLACE: Marriner S. Eccles Federal Reserve Board Building, C Street entrance between 20th and 21st Streets, N.W., Washington, D.C. 20551.

STATUS: Closed.

MATTERS TO BE CONSIDERED:

1. Personnel actions (appointments, promotions, assignments, reassignments, and salary actions) involving individual Federal Reserve System employees.

2. Any items carried forward from a previously announced meeting.

CONTACT PERSON FOR MORE INFORMATION: Mr. Joseph R. Coyne, Assistant to the Board; (202) 452–3204. You may call (202) 452–3207, beginning at approximately 5 p.m. two business days before this meeting, for a recorded announcement of bank and bank holding company applications scheduled for the meeting.

Dated: April 4, 1997.

Jennifer J. Johnson,

Deputy Secretary of the Board.

[FR Doc. 97–9157 Filed 4–4–97; 2:47 pm]

BILLING CODE 6210–01–P

FEDERAL TRADE COMMISSION

Notice and Request for Comment Regarding Compliance Assistance and Civil Penalty Leniency Policies for Small Entities

AGENCY: Federal Trade Commission.

ACTION: Notice of policies and request for comment.

SUMMARY: The Federal Trade Commission is issuing two statements describing its policies for assisting small businesses and other small entities. These policy statements implement requirements of the Small Business Regulatory Enforcement Fairness Act of 1996. The first policy statement discusses the variety of mechanisms available for small entities to obtain advice about their obligations under statutes and rules enforced by the Commission. The second policy statement describes the Commission's approach to reduction or waiver of civil penalties for small entities in various mitigating circumstances.

Although these statements reflect policies that are already in effect, the Commission is soliciting comments about them from interested persons. If, after considering any comments, the Commission determines to revise either policy, it will publish a revised policy statement.

DATES: The policy statements were effective on March 28, 1997. Comments will be received until May 12, 1997.

ADDRESSES: Comments should be identified as Small Business Policy Comments, and sent to: Secretary, FTC, Room H–159, Sixth and Pennsylvania Ave., N.W., Washington, D.C. 20580. Comments will be entered on the public record of the Commission and will be available for public inspection in Room 130 during the hours of 9 a.m. to 5 p.m.

FOR FURTHER INFORMATION CONTACT: Mary K. Engle, 202–326–3161, Enforcement Division, Bureau of Consumer Protection; or Neil W. Averitt, 202–326–2885, Office of Policy and Evaluation, Bureau of Competition.

SUPPLEMENTARY INFORMATION: Part A, the statement of the Small Entity Compliance Assistance Policy, is intended to explain to small businesses and other small entities what assistance is available to them from the Commission and its staff to help them understand and comply with obligations imposed by the statutes and rules enforced by the Commission. Part B, the statement of the Civil Penalty Leniency Policy, discusses how the Commission expects to consider mitigating factors in matters where small entities are subject to civil penalties. These statements are issued in implementation of sections 213 and 223 of the Small Business Regulatory Enforcement Fairness Act (''SBREFA''), Pub. L. No. 104–121, enacted March 29, 1996.

These policy statements provide guidance and information only, and do not create any rights, duties, obligations, or defenses, implied or otherwise. The Commission specifically retains its discretion for determining how to proceed in particular cases. Also, while the statements are drafted specifically with respect to small entities in order to

provide clear information to those entities about the applicable policies, comparable methods of providing compliance assistance, and comparable factors for selecting civil penalty amounts (as applied to the individual facts), may be used for larger entities as appropriate.

Part A—Small Business Compliance Assistance Policy

Under Section 213 of SBREFA, agencies regulating the activities of small entities must establish a program to answer small entities' inquiries and provide information and advice on compliance in particular circumstances, when appropriate. Section 213 provides as follows: Whenever appropriate in the interest of administering statutes and regulations within the jurisdiction of an agency which regulates small entities, it shall be the practice of the agency to answer inquiries by small entities concerning information on, and advice about, compliance with such statutes and regulations, interpreting and applying the law to specific sets of facts supplied by the small entity. In any civil or administrative action against a small entity, guidance given by an agency applying the law to facts provided by the small entity may be considered as evidence of the reasonableness or appropriateness of any proposed fines, penalties or damages sought against such small entity.

As discussed below, the Commission offers a comprehensive array of services, involving both general guidance and individualized advice, to help small entities understand their obligations under the laws and regulations administered by the Commission.

(1) General Guidance

The Commission offers general information in a variety of forms to address issues and questions that small entities frequently encounter. Such guidance frequently will satisfy the needs of small entities for guidance as to their own obligations. For example:

(i) The Commission has issued a brochure, entitled ''A Guide to the Federal Trade Commission,'' that includes brief descriptions of the principal antitrust statutes and consumer protection laws enforced by the agency.

(ii) The Commission also issues many types of publications designed to explain how small entities and others can conduct their affairs in compliance with the laws and regulations administered by the FTC.[1] These include materials specifically directed to businesses, such as:

(a) Business compliance guides explaining the requirements of specific Commission rules in a non-technical manner;[2]

(b) Industry guides addressing common compliance issues under the Federal Trade Commission Act, as applied to particular industries or particular practices;[3] and

(c) Guidelines and policy statements explaining the application of antitrust laws to particular practices or industries.[4]

The Commission's industry guides and other guidelines frequently contain specific examples and illustrative fact patterns that show how the agency would apply the law to a particular set of facts.[5]

(iii) The Commission also produces and disseminates over 175 print and broadcast materials that, while directed to consumers, can benefit small businesses by identifying the practices that generate consumer protection issues between businesses and their customers.[6]

(iv) All these materials are readily available to small businesses and other small entities through a variety of sources, including:

(a) Directly from the Commission. Materials on both competition and consumer protection issues can be obtained by writing Public Reference, Room 130, Federal Trade Commission, Washington, DC 20580, or by telephoning the Public Reference Room at (202) 326–2222.

(b) Most Commission items are available through the Internet, at the Commission's website at http://www.ftc.gov. The Commission is in the process of making all of its business compliance guides and its antitrust guidelines and policy statements, as well as its consumer materials, available on the Internet. Industry guides, as well as Commission Rules, published in the Code of Federal Regulations are available at the U.S. House of Representatives Internet Law Library's website at http://law.house.gov/cfr.htm.

(c) Materials also are available for distribution from the Small Business Administration regional centers, and the Consumer Information Center in Pueblo, Colorado.

(d) The BusinessLine section of the Commission's website provides online access to all of the Commission's business education publications. Similarly, the Commission's ConsumerLine provides online access to all of the Commission's consumer education publications, as well as the business education publications. In addition to being accessible through personal computers, the ConsumerLine may be reached from online services provided to the public at the offices of the Small Business Administration and the U.S. Department of Commerce.

(e) Materials are made available to state agencies, the military, schools and libraries, financial institutions, the media, and consumer and non-profit organizations.

(f) Materials are made available to industry trade associations and other business organizations. Frequently, business publications obtain and publish Commission guidance, such as advisory opinion letters (discussed below), in order to make the compliance information readily available to industry members.

(g) Commission guidance can often be found in commercial publications describing the Commission and its enforcement activities. For example, the Statements of Antitrust Enforcement Policy in Health Care are published at 4 CCH Trade Regulation Reporter ¶ 13,153.

(v) Other sources of information about the Commission and its policies include staff and Commission advisory opinions, proposed Commission consent agreements, final orders, and other formal documents. These are available in the Commission's Public Reference Room or by mail from Public Reference. Many are available from the Commission's Internet website as well.

(vi) Commissioners and Commission staff members frequently give speeches to business groups, and conduct programs geared to explaining statutory and regulatory requirements and to

[1] Currently, more than 50 such publications are available.

[2] The Commission has published compliance guides for many of its Rules affecting small businesses, including the Franchise Rule, Funeral Rule, Telemarketing Sales Rule, Telephone Disclosure and Dispute Resolution (''900'' Number) Rule, and Used Car Rule.

[3] Over 20 such guides are available, including guides for the use of environmental marketing claims, the feather and down products industry, the household furniture industry, and the jewelry industry.

[4] The Commission, jointly with the Department of Justice (''DOJ''), has issued guidance on such issues as health care, international operations, licensing of intellectual property, and horizontal mergers. The Commission has separately issued guidelines on promotional allowances and services.

[5] For example, in the area of medicine and health care, the FTC and DOJ have jointly issued guidelines discussing nine frequently encountered subjects, such as physician network joint ventures, and hospital joint ventures involving specialized clinical or other expensive health care services.

[6] For example, in fiscal year 1996 the Commission distributed 3,970,828 copies of its print materials. Also, small businesses are frequently consumers themselves; in particular, materials on such topics as disclosures to prospective franchisees and office supply scams that ship and bill for unordered merchandise can help small businesses avoid problems.

answering attendees' questions. Where the topics are of particular interest to small business, these speeches may involve appearances before groups representing small-business interests. Small business groups may request speakers by contacting directly the office at the Commission that specializes in the subject matter of interest. Business groups may also request speakers by contacting the Commission's Bureau of Competition, (202) 326–3300, or Bureau of Consumer Protection, (202) 326–3238. Copies of major speeches are available from the Office of Public Affairs, (202) 326–2180, and also on the Internet at the Commission's website.

(2) Individual Advice

(i) Small entities may also ask specific questions of the Commission or its staff. Each substantive area under the Commission's laws and regulations has one or more staff members who are responsible for responding to compliance inquiries. A staff member may determine that the agency's published material provides the assistance sought and send that material to the inquirer. Where the sources of general information are insufficient to provide the needed guidance or assistance, the staff member may provide specific, informal advice or arrange for a more formal response.

(ii) Small entities may make inquiries of the Commission by telephone, letter, fax, or e-mail. Inquiry by telephone rather than in writing is encouraged, since it is the agency's experience that the give-and-take of a conversation facilitates understanding an issue. If it appears that more detailed or complex information is needed to address an issue, the FTC staff may then ask the caller to provide a supplementary letter.

(a) Telephone inquiries regarding competition issues may be made to the general inquiries number of the Bureau of Competition, at (202) 326–3300; and calls regarding consumer protection issues may be made to the Bureau of Consumer Protection, at (202) 326–3238. From these contact points, calls will be forwarded to the staff member best able to address the particular issues presented.

(b) Written questions or comments regarding competition matters may be mailed to the Office of Policy and Evaluation, Bureau of Competition, Federal Trade Commission, Washington, DC 20580. Inquiries may be sent by fax to (202) 326–2884.

(c) Written questions or comments regarding consumer protection matters may be mailed to the Bureau of Consumer Protection, Federal Trade Commission, Washington, D.C. 20580. Inquiries may be sent by fax to (202) 326–3799.

(d) Persons who are uncertain which of these offices to contact may write or call the Office of the Secretary, Federal Trade Commission, Washington, D.C. 20580, (202) 326–2515. Inquiries may be sent by fax to (202) 326–2496.

(e) Inquiries can also be sent by e-mail to the address of ''webmaster@ftc.gov,'' where they will be reviewed and forwarded to the appropriate staff person. E-mail requests for advice should include the inquiring party's telephone number, again because it is the agency's experience that a telephone conversation is often needed to resolve an issue.

(f) In addition to the above sources of information, the Commission's ten regional offices, which are listed below, also may be contacted for information and materials regarding consumer protection or competition issues:

Atlanta Regional Office, Suite 5M35, Midrise Building, 60 Forsyth St., S.W., Atlanta, GA 30303, (404) 656–1390 FAX: (404) 656–1379

Boston Regional Office, 101 Merrimac St., Suite 810, Boston, MA 02114–4719, (617) 424–5960 FAX: (617) 424–5998

Chicago Regional Office, 55 E. Monroe St., Suite 1860, Chicago, IL 60603, (312) 353–8156 FAX: (312) 353–4438

Cleveland Regional Office, 668 Euclid Ave., Suite 520–A, Cleveland, OH 44114, (216) 522–4210 FAX: (216) 522–7239

Dallas Regional Office, 1999 Bryan St., Suite 2150, Dallas, TX 75201, (214) 979–9350 FAX: (214) 953–3079

Denver Regional Office, 1961 Stout St., Suite 1523, Denver, CO 80294–0101, (303) 844–2272 FAX: (303) 844–3599

Los Angeles Regional Office, 11000 Wilshire Blvd., Suite 13209, Los Angeles, CA 90024, (310) 235–4040 FAX: (310) 235–7976

New York Regional Office, 150 William St., 13th Floor, New York, NY 10038, (212) 264–8290 FAX: (212) 264–0459

San Francisco Regional Office, 901 Market St., Suite 570, San Francisco, CA 94103, (415) 356–5284 FAX: (415) 356–5284

Seattle Regional Office, 915 Second Ave., Suite 2896, Seattle, WA 98174, (206) 220–6366 FAX: (206) 220–6366

(iii) The FTC's Bureau of Competition has a special program to provide advice to firms that must give premerger notification pursuant to the terms of the Hart-Scott-Rodino Act. While premerger notification is generally required only for larger transactions valued at more than $15 million, some parties to such transactions may still come within the definition of ''small businesses.'' Any firm required to give notification (or that thinks it might be required to give notification) may receive guidance on the proper procedures from the Premerger Notification Office, in writing or by telephone, at (202) 326–3100. Interested firms may also obtain from the Premerger Notification Office a set of written guides describing the program and explaining how to determine whether a particular firm must file.

(iv) The Commission also has a special procedure to provide advice to small entities and other persons who are subject to an order of the Commission. The Compliance Division of the Bureau of Competition and the Enforcement Division of the Bureau of Consumer Protection are responsible for overseeing enforcement of and compliance with the competition and consumer protection administrative orders of the Commission. The Commission's general practice is to send a letter to each person subject to an order shortly after the order becomes effective. In addition to describing the requirements of the order in general terms, the letter also identifies and provides the telephone number for a specific staff person who has responsibilities for the matter. Staff of the Compliance and Enforcement Divisions are available to handle telephone and written inquiries concerning outstanding orders. For any small entity uncertain of which staff person is responsible for its order, questions concerning the requirements or scope of a competition order may be sent to: Compliance Division, Bureau of Competition, Federal Trade Commission, Washington, D.C. 20580, and questions regarding a consumer protection order to: Enforcement Division, Bureau of Consumer Protection, Washington, D.C. 20580. Telephone inquiries may be made to the Bureau of Competition Compliance Division at (202) 326–2687, and to the Bureau of Consumer Protection Enforcement Division at (202) 326–2996.

(v) If the above sources of advice are insufficient for the inquirer's purpose, the Commission has procedures for providing, where appropriate, either a Commission advisory opinion or, more commonly, a staff advisory opinion.[7]

(a) Advisory opinions are intended to clarify the law applicable to a course of action that the inquiring firm proposes to undertake, and ordinarily are not appropriate where the requester is already engaged in that course of action.

[7] 16 CFR 1.1–1.4.

(b) An advisory opinion from the Commission may be appropriate where the matter involves a substantial or novel question of fact or law and there is no clear Commission or court precedent; or the subject matter of the request and consequent publication of Commission advice is of significant public interest. Otherwise, the staff will provide a staff advisory opinion where practicable and appropriate.

(c) An advisory opinion, whether from staff or the Commission, will ordinarily be considered inappropriate if the same or substantially the same course of action is already under investigation or is or has been the subject of current governmental proceedings; or an informed opinion cannot be made, or could be made only after extensive investigation, clinical study, testing, or collateral inquiry. Advisory opinions do not answer hypothetical questions.[8]

(d) The Commission may at any time reconsider the questions involved and rescind any advice it gives in a Commission advisory opinion. Nevertheless, the Commission will not proceed against the requester of the advice respecting an action taken in good faith reliance on the advice, so long as the requester presented all relevant facts fully and accurately and discontinues the action promptly upon notification that the advice has been rescinded. Advice rendered in a staff advisory opinion does not bar the Commission from rescinding it and, where appropriate, initiating an enforcement action.

(e) The advice given to a small entity may be considered in an enforcement action as evidence of the reasonableness or appropriateness of any proposed fine, penalty, or damages sought against that small entity.

(f) It is often most efficient to make a telephone inquiry to the staff person responsible for the relevant area, as described above, before deciding whether to seek a formal advisory opinion. Persons wishing to request an advisory opinion should submit a statement identifying the requester and stating the question, the relevant provision of law, and all material facts. The request and two copies should be submitted to the Office of the Secretary, Federal Trade Commission, Washington D.C. 20580. For further information, that office may be reached by telephone at (202) 326–2515.

(g) For inquiries involving most types of issues under the Health Care Guidelines, the agency has committed itself to preparing advisory opinions within 90 days of the time that all necessary information has been submitted.[9] For matters on other topics, the time for reply will depend on the complexity and novelty of the issues raised.

These wide-ranging programs are provided by the Commission to assist small entities in understanding their obligations under the laws and regulations administered by the Commission.

Part B—Civil Penalty Leniency Program

Under Section 223 of SBREFA, agencies regulating the activities of small entities must establish, by March 29, 1997, a policy or program for ''the reduction, and under appropriate circumstances for the waiver, of civil penalties for violations of a statutory or regulatory requirement by a small entity.'' The statute suggests that ''[u]nder appropriate circumstances, an agency may consider ability to pay in determining penalty assessments.'' The statute further provides that the policy or program shall contain conditions or exclusions, which may include, but shall not be limited to:

(1) Requiring the small entity to correct the violation within a reasonable correction period;

(2) Limiting the applicability to violations discovered through participation by the small entity in a compliance assistance or audit program operated or supported by the agency or a State;

(3) Excluding from the program small entities that have been subject to multiple enforcement actions by the agency;

(4) Excluding violations involving willful or criminal conduct;

(5) Excluding violations that pose serious health, safety, or environmental threats; and

(6) Requiring a good-faith effort to comply with the law.

Section 223 provides that the policy or program is ''[s]ubject to the requirements of other statutes,'' and thus does not supersede existing law on penalties. Also, because the leniency policy is prescribed only for civil penalties for violations of a statutory or regulatory requirement, it does not apply to Commission cease and desist orders, federal court injunctions, affirmative requirements for fencing-in or redress contained in Commission orders, or civil penalty actions under Section 5(*l*), 15 U.S.C. 45(*l*), for violations of Commission orders.

None of the statutes or rules enforced by the Commission provide for the mandatory imposition of non-discretionary penalties. In most instances, as discussed below, the Commission is not authorized to assess civil penalties itself, but rather selects a civil penalty amount to be sought in a federal court action brought by the Department of Justice. In developing a policy statement that describes generally how the Commission will exercise its discretion in selecting penalty amounts for small entities, the Commission considered that it already exercises its discretion in a wide variety of contexts to consider mitigating factors when selecting penalty amounts. The Commission believes that this experience suggests a list of factors suitable for selecting the penalties appropriate to small entities.

First, Section 5(m)(1)(A) of the FTC Act, 15 U.S.C. 45(m)(1)(A), authorizes the Commission to seek, in federal district courts, up to $11,000 per violation of certain Commission rules.[10] Such a civil penalty is assessable only if the defendant knew or should have known that its acts violated the rule. In determining the appropriate amount of a penalty, the courts are directed by Section 5(m)(1)(C), 15 U.S.C. 45(m)(1)(C), to take into account the degree of culpability; any history of prior such conduct; ability to pay; effect on ability to continue to do business; and such other matters as justice may require. The Commission also evaluates these factors to determine appropriate penalties in cases that are not litigated.

Second, one Commission rule has a separate enforcement mechanism. Under the Energy Policy and Conservation Act, 42 U.S.C. 6303(a), the Commission has authority to assess administrative civil penalties, up to $110 per violation, for violations of its Appliance Labeling Rule, 16 CFR Part 305. The Commission's Rules of Practice provide that factors to be considered in determining the amount of penalty include the respondent's size and ability to pay; the respondent's good faith; any history of previous violations; the deterrent effect of the penalty action; the length of time involved before the Commission was made aware of the violation; the gravity of the violation, including the amount of harm to

[8] As previously noted, Commission staff on an informal basis provide advice or guidance in response to inquiries.

[9] *See* Introduction, Statements of Antitrust Enforcement Policy in Health Care, 4 CCH Trade Reg. Rep. ¶ 13,153 at p. 20,800.

[10] The Commission recently issued a rule implementing the Debt Collection Improvement Act of 1996 (Pub. L. 104–134) by making inflation adjustments in the dollar amounts prescribed for each type of violation established by the statutory civil penalty provisions within the FTC's jurisdiction. *See* 61 FR 54548 (Oct. 21, 1996).

consumers and the public caused by the violation; and such other matters as justice may require.[11]

Third, civil penalties may also be imposed for violations of the Hart-Scott-Rodino Antitrust Improvements Act of 1976, 15 U.S.C. 18a (''HSR Act''). Under the HSR Act, acquisitions above a certain size,[12] involving entities above certain sizes,[13] cannot be consummated unless certain information is filed with the Commission and with the Department of Justice and certain waiting periods are observed. By statute, civil penalties of up to $11,000 for each day a person is in violation of the HSR Act may be imposed in a federal court action brought by DOJ. The Commission is charged with administering the premerger notification program established by the HSR Act, and recommends actions and penalty amounts to DOJ. The Commission generally will consider the firm's ability to pay when recommending appropriate penalties. The Commission generally will not seek an enforcement action for a violation of the HSR Act that appears to be truly inadvertent and where the filing is made promptly after discovery of the oversight. If the violation is the firm's first, and is not the result of gross negligence or a reckless disregard for the filing obligation, the Commission staff generally sends a letter calling attention to the filing obligation but indicating that no further action will be taken if the filing requirement is promptly met.

Fourth, judicial opinions interpreting Section 5(l) of the FTC Act, which provides for civil penalties of up to $11,000 per violation of FTC administrative orders, are instructive.[14] The statute does not set forth criteria for assessing specific penalties for Section 5(l) violations, but the Third Circuit Court of Appeals in *United States* v. *Reader's Digest Ass'n,* 662 F.2d 955, 967 (3d Cir. 1981), cert. denied, 455 U.S. 908 (1982), set out five factors bearing on the selection of an appropriate civil penalty or remedy: the good or bad faith of the respondent; the injury to the public; the respondent's ability to pay; the desire to eliminate the benefits derived from the violations; and the necessity of vindicating the Commission's authority. In each penalty case, the Commission selects an appropriate penalty amount after weighing the above factors, along with the litigation risks and penalties imposed in similar cases.

Finally, the Commission has undertaken an innovative approach to achieve compliance with one of its rules. In early 1996, the Commission approved a new program to increase compliance with its Funeral Industry Practices Rule, 16 CFR Part 453, which, among other things, requires funeral homes to give consumers a list of prices for various goods and services offered. The Funeral Rule Offenders Program, implemented jointly by the Commission and the National Funeral Directors Association (''NFDA''), offers to certain businesses that appear to have violated the Rule an alternative to a federal court enforcement action. Funeral firms entering the alternative program make a voluntary payment to the U.S. Treasury in an amount lower than would be sought in a civil penalty action. The NFDA then will review the firm's practices, revise those practices to comply with the Rule, and conduct on-site training and testing for all licensed employees. The NFDA also will provide follow-up training, and conduct testing each year for five years.

In light of the Commission's experience exercising its discretion to consider mitigating factors when selecting appropriate penalty amounts, the innovative approach taken to achieve compliance with one rule, and the factors suggested in SBREFA itself, the Commission adopts the following policy for reducing, or in appropriate circumstances waiving, civil penalties for violations of a statutory or regulatory requirement by a small entity.

When the Commission identifies a small entity as not being in compliance with a statutory or regulatory requirement within the Commission's jurisdiction, the Commission will consider the propriety of penalty waiver or reduction. The following factors will weigh in favor of leniency:

1. The small entity reported the violation to the Commission promptly after discovering it.

2. The small entity corrected the violation within a reasonable time, if feasible.

3. The small entity had a low degree of culpability. The degree of culpability reflects the efforts taken by the entity to determine and meet its legal obligations. These efforts are judged in light of such factors as the size of the business; the sophistication and experience of its owners, officers, and managers; the length of time it has been in operation; the availability of relevant compliance information; the clarity of its legal obligations; and any active attempts to clarify any uncertainties regarding its obligations.

4. The small entity is financially unable to pay the usual penalty, or the usual penalty would impair the small entity's ability to do business or to compete effectively.

5. The small entity has not been subject to any previous enforcement action by the Commission or other federal, state, or local law enforcement jurisdiction for the same or similar conduct for which the small entity is being considered for leniency. Where there have been prior enforcement actions, however, the Commission may take into consideration, as possible mitigating factors, when the previous enforcement action occurred, and whether the small entity's management has changed since the previous enforcement action.

6. The small entity's violations did not involve willful or criminal conduct.

7. The violations did not pose a serious health, safety, environmental, or economic threat to consumers or the public.

Each factor need not necessarily be present for a small entity to qualify for leniency, and, depending upon the particular circumstances, some factors may be weighed more heavily than others. Also, any other factors relevant in particular circumstances will be considered, as appropriate.

The above criteria include most of the factors suggested in SBREFA. The one suggested factor that the Commission is not including is one that would limit the penalty reduction policy or program to violations discovered by the small entity through participation in an agency-run or state-run compliance assistance or audit program. The Commission does not have formal compliance assistance or audit programs. Given the variety and scope of the rules and statutes that the Commission enforces, imposing some parallel requirement, such as a self-auditing program, would unnecessarily restrict the availability of penalty waiver or reduction.

In addition, the Commission has expanded somewhat the scope of two of the factors suggested in SBREFA. First, SBREFA suggests excluding entities that have been subject to multiple enforcement actions by the agency. The

[10] The criteria for assessing penalties for violations of the Appliance Labeling Rule are set forth in Subpart K of Part 1 of the Commission's Rules of Practice, 16 CFR 1.92–1.97.

[12] Generally, at least $15 million.

[13] Generally, one of the entities must have sales or assets above $100 million and the other must have sales or assets above $10 million. Because of the ''size of person'' and ''size of transaction'' thresholds, many small businesses are not subject to the premerger notification reporting requirements of the HSR Act.

[14] The Commission's order enforcement cases are not included in the SBREFA civil penalty leniency program because, as noted above, SBREFA only refers to entities accused of violating statutes and rules, not orders. Moreover, Section 5(l) defendants are, by definition, allegedly repeat offenders, and therefore are unlikely to be good candidates for leniency. (As in all cases, however, the agency would consider individual facts that may affect the penalty to be sought in each particular case.)

Commission has broadened this category to include entities that have been subject to actions for the same or similar conduct by other federal agencies or state or local agencies. The law violations prosecuted by the Commission are frequently very similar to violations prosecuted by other federal, state, and local law enforcement agencies.[15] It is therefore appropriate, in considering whether to exclude entities from lenient treatment, to consider whether similar conduct has been subject to enforcement efforts by such agencies.

Second, SBREFA also suggests excluding violations that pose serious health, safety, or environmental threats. The Commission will, in addition to such risks, also consider serious economic injury, as that form of injury is the type most often encountered in Commission cases, and in many instances may cause as much serious injury as that arising from health, safety, or environmental threats.

Part C—Request for Comments

Members of the public are invited to comment on any issues or concerns that they believe are relevant or appropriate to the policies described above. The Commission requests that factual data upon which the comments are based be submitted with the comments. In this section, the Commission identifies specific issues on which it solicits public comments. The identification of issues is designed to assist the public and should not be construed as a limitation on the issues on which public comment may be submitted.

Questions

(1) Should the Commission revise in any way the policies that it has adopted to assist small businesses and other small entities? If so, please provide specific suggestions.

(2) How would the revisions affect the benefits provided by the current policies?

(3) Are any of the criteria or means of guidance that the Commission has used in establishing small business compliance assistance and civil penalty leniency policies for small businesses and other small entities inappropriate? If so, please explain.

(4) Are there any other criteria or economical means of guidance that the Commission should use? If so, please elaborate.

Authority: Secs. 213 and 223, Pub. L. 104–121, 110 Stat. 847.

By direction of the Commission.

Donald S. Clark,

Secretary.

[FR Doc. 97–8941 Filed 4–7–97; 8:45 am]

BILLING CODE 6750–01–P

[15] In addition, the Commission often works with the State Attorneys General and other federal agencies, such as the United States Post Office, to investigate conduct that may violate laws enforced by the Commission. In cases where we work with certain agencies, the Commission must often enter conduct Orders to ensure that the violative behavior is prohibited nationwide.

FEDERAL TRADE COMMISSION

[File No. 971–0049]

Autodesk, Inc.; Softdesk, Inc.; Analysis to Aid Public Comment

AGENCY: Federal Trade Commission.

ACTION: Proposed consent agreement.

SUMMARY: In settlement of alleged violations of federal law prohibiting unfair or deceptive acts or practices and unfair methods of competition, this consent agreement, accepted subject to final Commission approval, would prohibit, among other things, Autodesk—a San Rafael, California-based developer and marketer of computer-aided design (CAD) software which intends to acquire Softdesk, Inc.—from reacquiring the ''IntelliCADD'' CAD engine that Softdesk recently sold to Boomerang Technology, Inc. The complaint accompanying the consent agreement alleged that Autodesk's $90 million acquisition of Softdesk, as originally proposed, would have substantially lessened competition in the development and sale of CAD software engines.

DATES: Comments must be received on or before June 9, 1997.

ADDRESSES: Comments should be directed to: FTC/Office of the Secretary, Room 159, 6th St. and Pennsylvania Ave., NW., Washington, DC 20580.

FOR FURTHER INFORMATION CONTACT: Howard Morse, Federal Trade Commission, S–3627, 6th St. and Pennsylvania Ave., NW., Washington, DC 20580. (202) 326–2949.

SUPPLEMENTARY INFORMATION: Pursuant to section 6(f) of the Federal Trade Commission Act, 38 Stat. 721, 15 U.S.C. 46, and § 2.34 of the Commission's rules of practice (16 CFR 2.34), notice is hereby given that the above-captioned consent agreement containing a consent order to cease and desist, having been filed with and accepted, subject to final approval, by the Commission, has been placed on the public record for a period of sixty (60) days. The following Analysis to Aid Public Comment describes the terms of the consent agreement, and the allegations in the accompanying complaint. An electronic copy of the full text of the consent agreement package can be obtained from the Commission Actions section of the FTC Home Page (for March 31, 1997), on the World Wide Web, at ''http://www.ftc.gov/os/actions/htm.'' A paper copy can be obtained from the FTC Public Reference Room, Room H–130, 6th Street and Pennsylvania Avenue, NW., Washington, DC 20580, either in person or by calling (202) 326–3627. Public comment is invited. Such comments or views will be considered by the Commission and will be available for inspection and copying at its principal office in accordance with § 4.9(b)(6)(ii) of the Commission's rules of practice (16 CFR 4.9(b)(6)(ii)).

Analysis to Aid Public Comment on the Provisionally Accepted Consent Order

The Federal Trade Commission (''the Commission'') has accepted, subject to final approval, an Agreement Containing Consent Order (''Agreement'') from Autodesk, Inc. (''Autodesk'') and Softdesk, Inc. (''Softdesk'').

The proposed Order has been placed on the public record for sixty (60) days for reception of comments from interested persons. Comments received during this period will become part of the public record. After sixty (60) days, the Commission will again review the Agreement and the comments received and will decide whether it should withdraw from the Agreement or make final the Agreement's proposed Order.

The Commission's investigation of this matter concerns a proposed acquisition by Autodesk of Softdesk. In December 1996, Autodesk and Softdesk entered into an Agreement and Plan of Reorganization whereby Autodesk will acquire 100% of the voting securities of Softdesk in exchange for share of Autodesk common stock with a value of $90 million (the ''Acquisition'').

The Agreement Containing Consent Order would, if finally accepted by the Commission, settle charges that the Autodesk acquisition of Softdesk as originally proposed may have substantially lessened competition in the development and sale of computer aided design (''CAD'') engines for Windows-based personal computers in the United States or in North America. The Commission has reason to believe that Autodesk's original proposal to acquire Softdesk violates Section 5 of the Federal Trade Commission Act and that the acquisition, if consummated, would have violated Section 7 of the Clayton Act and Section 5 of the Federal Trade Commission Act, unless an

effective remedy eliminates likely anticompetitive effects.

The Proposed Complaint

According to the Commission's proposed complaint, Autodesk is a public company that develops and markets computer-aided design (''CAD'') software for use in the architecture, engineering and construction (the ''AEC'') industry. Autodesk offers a portfolio of software products including a CAD engine marketed and sold under the name ''AutoCAD,'' for use on Windows-based personal computers. Autodesk has had annual sales in excess of $530 million. Softdesk has had annual sales in excess of $40 million. Softdesk offers a portfolio of applications software that is used in conjunction with and to supplement CAD engines, primarily AutoCAD. Softdesk also was developing and had tested a CAD engine, referred to as ''IntelliCADD,'' for use on personal computers that would be used as a substitute and replacement of AutoCAD.

According to the Commission's proposed complaint, a relevant line of commerce within which to analyze the effects of Autodesk's acquisition of Softdesk is the market for CAD engines for Windows-based personal computers. CAD engines are critical to architects and engineers to plan and design everything from manufactured products, to buildings, to utilities, and water treatment plants. The complaint alleges that there are no economic substitutes for CAD engines for Windows-based personal computers. CAD engines for Unix-based computers, the only theoretical alternative, are inadequate substitutes because of the higher costs to acquire the hardware and software and higher costs to maintain and service.

The Commission's proposed complaint further alleges that Autodesk is the dominant provider of Windows-based CAD engines, accounting for nearly 70% of the installed base, and alleges that the relevant U.S. or world market for Windows-based CAD engines is highly concentrated.

The complaint further alleges that de novo entry or fringe expansion into the relevant market sufficient to deter or defeat reductions in competition resulting from Autodesk's acquisition of Softdesk and the IntelliCADD technology would not be timely or likely. According to the proposed complaint, developing a CAD engine would require an expenditure of substantial sunk costs and would be time-consuming. The large installed base of AutoCAD users necessitates that any new CAD engine developed and offered in the market offer file compatibility and transferability to AutoCAD in order to gain sales. Users of AutoCAD have a large number of drawings in the AutoCAD format. Moreover, many users must share files they create with others who must be able to read and edit those files using their CAD software. Since most engineers use AutoCAD, any alternative CAD engine must have the capability to read and be compatible with AutoCAD files without losing substantial amounts of data or information.

According to the complaint, Softdesk's IntelliCADD product was being developed to compete directly with and to replace AutoCAD as a pc-based CAD engine. IntelliCADD was in the final stages of testing and was within months of introduction to the market when the current proposal by Autodesk to acquire Softdesk was announced. The IntelliCADD product, if brought to market, would have provided direct and significant competition to Autodesk in that it offered file compatibility and file transferability with AutoCAD, a feature that other pc-based CAD engines currently in the market do not offer. Furthermore, the Commission's complaint also alleges that some customers have already altered their buying decisions in anticipation of the introduction of IntelliCADD by delaying or postponing purchasing AutoCAD.

After being advised by Commission staff of these competitive concerns, Softdesk sold and transferred all of its rights and title to the IntelliCADD product to Boomerang Technology, Inc. (''Boomerang'') on February 21, 1997. Boomerang is a company created and owned by the developer of the IntelliCADD product, a former Softdesk employee. Boomerang now has full rights and title to the IntelliCADD product and has assigned its rights to Visio Corporation (''Visio''). As a result, the IntelliCADD product is now under the control of an entity independent of Autodesk and Softdesk, which is free to fully develop and market the IntelliCADD product.

The proposed complaint alleges that the acquisition by Autodesk of the IntelliCADD product would have substantially lessened competition by, among other things, eliminating actual and potential competition to Autodesk's AutoCAD product, likely resulting in continued high prices for CAD engines.

The Proposed Consent Agreement

The proposed Order accepted for public comment contains provisions that would prohibit either Autodesk or Softdesk from re-acquiring the IntelliCADD product, or any entity that owns or controls the IntelliCADD technology, without prior notice to the Commission for a period of ten (10) years. The purpose of this prohibition is to ensure the continued development and sale of the IntelliCADD product to compete with the merged Autodesk/Softdesk, to ensure that the IntelliCADD product remains in the hands of an independent competitor in the development and sale of CAD engines for Windows-based personal computers, and to remedy the lessening of competition as alleged in the Commission's complaint.

The proposed order would also prohibit Autodesk or Softdesk from enforcing any non-compete or confidentiality agreements against any former employees of Softdesk whose primary responsibility was the development of the IntelliCADD product that may now or in the future be an employee of Boomerang or its assigns. The purpose of these provisions is to ensure that Boomerang or its assigns remain a viable competitor to Autodesk and Softdesk in the development and sale of the IntelliCADD product, thereby fostering a competitive environment for the sale of CAD engines for Windows-based personal computers.

Pending final issuance of this proposed order, Autodesk and Softdesk have also entered into an Interim Agreement whereby they have agreed to be bound to the provisions and terms of the proposed Order pending and until final issuance by the Commission.

The purpose of this analysis is to facilitate public comment on all aspects of the proposed Order. This analysis is not intended to constitute an official interpretation of the Agreement or the proposed Order or in any way to modify the terms of the Agreement or the proposed Order.

Donald S. Clark,

Secretary.

[FR Doc. 97–8940 Filed 4–7–97; 8:45 am]

BILLING CODE 6750–01–M

DEPARTMENT OF HEALTH AND HUMAN SERVICES

Administration for Children and Families

[Program Announcement No. 93600–97–2]

Head Start Bureau: Fiscal Year 1997 Discretionary Announcement for Cooperative Agreements to support Head Start Disability Services Quality Improvement Centers; Availability of Funds and Request for Applications

AGENCY: Administration on Children, Youth and Families, ACF, DHHS.

ACTION: Notice.

SUMMARY: The Administration for Children and Families, Administration on Children Youth and Families' Head Start Bureau announces the availability of competitively awarded cooperative agreements to assist qualified institutions and organizations in the provision of training and technical assistance (T/TA) on Head Start disabilities services activities in 12 service areas. The cooperative agreements will support Head Start Disabilities Services Quality Improvement Centers (DSQICs). ACF Regions I through X, and the American Indian Program and Migrant Program Branches will each have one DSQIC. The States included in each of these 12 service areas are listed in Appendix A.

DATES: The closing date for the submission of applications under this announcement is June 9, 1997.

FOR FURTHER INFORMATION CONTACT: For questions related to the Program Announcement, please contact the ACYF Operations Center, Technical Assistance Team at 1–800–351–2293. Staff at this center will answer questions regarding the application requirements or refer you to the appropriate contact person in ACYF for programmatic questions. You may also locate frequently asked questions about this program announcement on the ACYF Website at http:\\www.acf.dhhs.gov.

Background

Head Start is a national program that provides comprehensive developmental services for preschool children, ages three to five from low-income families and, under the Early Head Start program, for infants, toddlers and pregnant women. An essential feature of every Head Start program is the involvement of parents, both in the development of their children and in the direction of the program at the local level.

Now administered by the Administration for Children and Families, the Head Start program began in 1965 in the Office of Economic Opportunity as an innovative way to serve children and their low-income families. For FY 1997, $3,981,000,000 is available for Head Start and approximately 800,000 children are expected to be enrolled. Approximately 1,480 community-based, public and private non-profit organizations receive Head Start grants and develop unique and innovative programs within a framework of national standards to meet their specific local needs. Head Start links families with other community institutions and local education agencies through both center and home-based programs.

In FY 1994 the Advisory Committee on Head Start Quality and Expansion issued its recommendations for improvement and expansion. It recommended that Head Start (1) strive to achieve quality and excellence in every local Head Start program, (2) respond flexibly to the needs of the children served and their families and (3) forge new partnerships at the community, State and Federal levels. The Committee found that most Head Start grantees provide high quality services; however, the quality of programs is uneven across the country.

In renewing the Head Start vision in a way that responds more effectively to a changing world, Head Start is continuing to provide high quality comprehensive services and to strive for excellence. As Head Start is expanding and renewing itself, there is a concomitant need for assistance from institutions and organizations that can provide effective and responsive training and technical assistance that support the work of the grantee and delegate agencies that directly provide the services to children and their families.

Program Purpose

The Head Start Disabilities Services Quality Improvement Centers (DSQICs) created through this announcement will form a regionally-based system, composed of institutions and organizations whose common purpose will be to work with local Head Start programs through training and technical assistance. This nationwide T/TA effort is designed to support the continuous improvement of all grantees and delegate agencies as they work to provide high quality and effective services to children and families and address the emerging priorities of child care partnerships, Head Start expansion and welfare reform. The T/TA system reflects a national commitment to quality improvement, local capacity-building and ongoing evaluation.

The major purpose of the DSQICs is to provide Head Start and Early Head Start grantees with technical assistance and training to enable them to include children with disabilities into these programs so that the special needs resulting from their disabilities and the special needs of their parents are met.

Head Start programs are required to make at least ten percent of their enrollment opportunities available to children with disabilities. In the 1995–96 program year children with disabilities comprised approximately 13% of the children enrolled in Head Start. Head Start programs provide services to children with disabilities and their families in a manner which includes them in all aspects of the program and supports collaborative arrangements with other community programs, particularly local education agencies (LEAs), to deliver needed special services. Head Start programs must comply with the Performance Standards in designing and delivering services for children with disabilities.

Quality Improvement Centers

In previous years, ACF operated its national Head Start T/TA system through contracts, acquiring the services of qualified providers to meet the training and technical assistance needs of local Head Start programs. In this announcement, ACF responds to the recommendations of the Secretary's Advisory Committee on Head Start Quality and Expansion and to consultations with more than 1,000 people in the field of Head Start and early childhood development to redesign its T/TA system. This cooperative agreement Quality Improvement Center will provide assistance to institutions and organizations with expertise in the field of early child development and education to: respond to the needs of grantees and delegate agencies and of communities for flexible technical assistance; expand the influence of Head Start as a national laboratory to other community- and academically-based early childhood development and education programs; and to work with grantees and delegate agencies and with communities in achieving continuous quality improvement of their services for children and low-income families. Rather than a system of T/TA that relies principally on Federal direction and decision-making, this new approach seeks to assist experts in the communities where Head Start programs provide services in becoming

collaborators in a renewed quality improvement effort.

This revised Head Start T/TA system will promote excellence by supporting a continuous learning environment for Head Start staff. It will foster partnerships among Head Start programs, communities, academic institutions (two or four year colleges and universities) and governments to engage them in helping children, parents, and staff develop their full potential.

DSQICs Roles and Responsibilities

The DSQICs are to work with Head Start grantees to enable Head Start programs to develop the following capacities:

- Provide effective early childhood education programs that model an inclusive and collaborative approach to disabilities services;
- Enhance the quality of life and maximize the potential of Head Start-eligible children and their families;
- Identify and effectively access a wide variety of resources available to support quality disabilities services, both within and outside Head Start;
- Integrate all of the component resources available to a Head Start program so as to enhance and reinforce a comprehensive approach to families and children;
- Establish and maintain linkages with the child care community to assure effective partnerships among providers of services to children with disabilities and their families; and
- Maintain the unique qualities of Head Start and help sustain these qualities through periods of growth and change.

Among the services the DSQICs will provide are the following:

- Provide joint training opportunities with academic institutions for clusters of grantees that have the same needs based on an in-depth needs assessment.
- Interact with Head Start State Associations and American Indian and Migrant Head Start Associations, State agencies and community organizations to coordinate services and to track relevant State legislation and regulations affecting disabilities services.
- Enhance Head Start program capacity to ensure continuous improvement in disabilities services.
- Establish and maintain a cadre of qualified, locally-based consultants to provide T/TA on disabilities services.
- Promote quality improvements in disabilities services for all grantees.
- Customize services based upon research and supported by state-of-the-art technology.
- Facilitate the development and implementation of State-level interagency agreements between Head Start/Early Head Start programs and the local educational agencies and Part H providers responsible for assuring the implementation of the Individuals with Disabilities Education Act (IDEA).
- Facilitate information sharing and collaboration with stakeholders in Head Start and in the early child care communities as well as academic communities as it relates to disabilities services.

DSQICs Structure and Design

The DSQICs will each establish structures for the delivery of services that meet the needs of their service area based on the training needs identification process. We expect these structures will vary from DSQIC to DSQIC. These structures might involve creating one or more satellite offices to serve the Head Start grantees in a State, in several States or a cluster of grantees in parts of one or more States. Such State or cluster sites may be used to establish a presence closer to grantee communities, to provide training, technical assistance or networking with grantees with similar needs. Large States may have more than one cluster office and smaller States may share a cluster office. The DSQIC is encouraged to consider establishing satellite offices with other Head Start T/TA providers. The American Indian Programs Branch's DSQIC may have up to three cluster offices and the Migrant Programs Branch's DSQIC may have up to two cluster offices. In other instances, a DSQIC might assign staff within its central office to serve as a liaison to grantees in a State or part of a State. Applicants are encouraged to propose efficient and effective approaches to achieving this kind of geographic proximity.

It is assumed that Head Start grantees and delegate agencies will have varying levels of T/TA needs and will, therefore, seek varying levels of assistance from this project.

DSQICs will be responsible for fulfilling the program goals and objectives outlined in their applications, including responsibilities for directing, managing and implementing programs of training and technical assistance for the Regions that they serve. These programs should be tailored to meet the disability services T/TA needs of the various Head Start grantees.

Additional information about the range of program areas and needs of Head Start grantees and guidance to approaches to training and technical assistance is provided in Appendix B.

Federal Involvement Roles and Responsibilities

Federal involvement in the DSQICs will include substantial roles for the Head Start Bureau, which includes the American Indian Programs Branch and the Migrant Programs Branch, and the ACF Regional Offices. Substantial Head Start Bureau and ACF Regional Office involvement with the DSQIC will occur when:

- Changes in initiatives or national Head Start policy need to be communicated to the DSQIC because of their effect on the Head Start programs with which the DSQICs are working;
- Federal approval is needed for the DSQIC to select or award a subgrant or contract;
- Federal consultation and approval is needed in the selection of a project director;
- Federal collaboration or joint planning and participation in conferences or meetings with Head Start programs and child development professionals will achieve efficiencies and more effective agendas; and
- Participation on the Regional T/TA Coordinating Council with other T/TA providers, as described in Appendix B, will assist the DSQIC provider in setting overall policies and in conducting an ongoing evaluation of the T/TA provided.

The roles of the Head Start Bureau and ACF Regional Offices are as follows:

The Head Start Bureau will:

- Provide leadership and support for the national Head Start T/TA system, which includes the use of national contractors and DSQICs to support meetings, program monitoring, materials development and other specific needs;
- Set Head Start program priorities and formulate new initiatives that may affect the plans and priorities of the DSQICs, and consult regularly with the DSQICs to ensure that they are fully informed of these national priorities and initiatives;
- Set standards for the DSQIC centers in the provision of quality Head Start T/TA services for children and families based on Human Resource Development principles of adult learning, on-going needs identification, interactive skill development and evaluation;
- Foster collaboration within and outside of Head Start, develop partnerships among Federal programs, and promote partnerships with the business community;
- Conduct semiannual T/TA meetings, to which the DSQIC centers will be invited; and
- Monitor the DSQICs to ensure accountability and fiscal responsibility throughout the T/TA system.

The ACF Regional Offices and the Head Start Bureau's American Indian Programs Branch and Migrant Programs Branch will each:

- Appoint a T/TA coordinator to coordinate Regional T/TA services and to serve as a liaison with the DSQIC center;
- Participate in the Regional Coordinating Council, as described in Appendix B;
- Review a summary of the needs assessments and the T/TA plans related to disabilities services for grantees in the Region in order to effectively coordinate T/TA activities;
- Conduct bimonthly (every other month) conference calls or Regional T/TA coordinating meetings;
- Attend national T/TA meetings;
- Seek out collaborations within and outside the Head Start program by participating on the Regional Coordinating Council; exhibiting leadership in coordinating child care/Head Start partnerships and working with the Head Start State Collaboration grantees.
- Exhibit leadership in coordinating interagency agreements with State Departments of Education, State Part H Lead Agencies, and other relevant agencies.
- Annually review all services performed by the Regional DSQIC prior to submission of the continuation application in order to provide relevant consultation to the DSQIC and Regional coordination;
- Conduct reviews and manage the follow-up process for deficient grantees, i.e., carry out joint planning with the DSQIC designed to address identified deficiencies and to identify the T/TA needed by deficient grantees in order to implement their Quality Improvement Plans (QIPs); and
- Encourage well-performing grantees to develop their own T/TA plans and to implement their own T/TA.

Program Duration

This announcement is soliciting applications for project periods up to five years. Awards, on a competitive basis, will be for a one-year budget period. Applications for continuation cooperative agreements funded under these awards beyond the one-year budget period, but within the five-year project period, will be entertained in subsequent years on a noncompetitive basis, subject to the availability of funds, satisfactory progress of the cooperative agreement grantee and a determination that continued funding would be in the best interest of the government.

Eligible Applicants

Public, private nonprofit, and private for-profit organizations are eligible to apply for these cooperative agreements. It should be noted that for-profit organizations must waive their fee/profit.

Only incorporated agencies and organizations, not individuals, are eligible to apply. On all applications developed jointly by more than one agency or organization, the application must identify only one organization as the lead organization and the official applicant. The other organizations may be included as participants, subgrantees or subcontractors.

An applicant may apply for more than one service area, but must submit a separate application for each service area for which it is applying.

Before the applications are reviewed, each application will be screened to determine that the applicant organization is an eligible applicant as specified. Ineligible applicants will be notified at that time.

Project Development

Applicants are urged to discuss their interests and ideas for developing DSQICs early in the planning stage with local Head Start grantees and appropriate State, Regional, and local agencies. Community support should be encouraged by providing opportunities for public and private participation in the planning and development phases.

This program is covered under Executive Order 12372, ''Intergovernmental Review of Federal Programs,'' and 45 CFR Part 100, ''Intergovernmental Review of Health and Human Services Program and Activities.''

Under the Executive Order, States may design their own processes for reviewing and commenting on proposed Federal assistance under covered programs. All jurisdictions which participate in the Executive Order process have established Single Points of Contact (SPOCs). A list of the Single Points of Contact for each State and Territory is included in this program announcement as Appendix C. Applicants from participating jurisdictions should contact their SPOCs as soon as possible to alert them to the prospective applications and to receive instructions. Applicants must submit any required material to the SPOCs as soon as possible so that the ACF program office can obtain and review SPOC comments as part of the award process. The applicant must submit all required materials, if any, to the SPOC and indicate the date of this submittal (or the date of contact if no submittal is required) on the Standard Form 424, item 16a. Under 45 CFR 100.8(a)(2), a SPOC has 60 days from the application deadline to comment on proposed new and competing continuation awards. SPOCs are encouraged to eliminate the submission of routine endorsements as official recommendations. Additionally, SPOCs are requested to clearly differentiate between mere advisory comments and those official State process recommendations which may trigger the ''accommodate or explain'' rule. When comments are submitted directly to ACF, they should be addressed to: Department of Health and Human Services, Administration for Children, Youth and Families, Head Start Bureau, P.O. Box 1182, 330 C Street, S.W., Washington, D.C. 20201.

Completing the Application

In preparing the application, use standard English language and avoid jargon. For the program narrative, type using black print no smaller than 12 pitch or 12 point size. An application may not exceed 250 double-spaced pages inclusive of resumes, charts and appendices. If applications exceed 250 double-spaced pages, the other pages will be removed from the application and not considered by the reviewers.

Each copy should be secured with a binder clip in the upper left-hand corner. The application must be paginated beginning with the Form 424 and also contain a table of contents listing each section of the application with the respective pages. To facilitate handling, do not use covers, ring binders or tabs. Applicants are requested not to send pamphlets, brochures, or other printed materials as these pose xeroxing difficulties nor should any video material be submitted. These materials, if submitted, will not be included in the review process if they exceed the page limitation. Each page of the application will be counted to determine total length. Applicants are advised that the copies of application submitted, not the original, will be reproduced by the Federal government for review.

Instructions for completing the forms are found either on the reverse sides of the forms or on supplemental pages. Additional guidance may be provided in the program announcement. If more space is needed than is provided, use a blank sheet of paper to complete the item, using the identical format. Clearly identify the continuation page as such, and the information items contained thereon, and attach the page after the appropriate page of the application. Computer-generated facsimiles may be

substituted for any of the forms provided in this packet. Such substitute forms should be printed in black ink and must maintain the exact wording and format of the government-printed forms, including all captions and spacing. Any deviations may be grounds for ACF to reject the entire application.

Additional note: For SF–424 item ''Federal Identifier,'' if the applicant organization currently has a payment account with the Department of Health and Human Services, cite the Payee EIN or PIN in the ''Federal Identifier'' block.

Assembling

To facilitate the review and processing of the application by the awarding office, all pages should be numbered and preceded by a table of contents. Assemble the application with the cover letter (if provided) on top followed by a table of contents, the SF–424 series forms, the program narrative, and any remaining documents. Completed applications should be signed and dated in ink by the authorized official of the applicant organization. An original and two copies of the application should be provided. Applicants may omit from the application copies specific salary rates or amounts for individuals identified in the application budget. This information will be made available to the non-Federal reviewers. Rather, only summary information is required.

Applicants are encouraged to use the least costly, but most efficient method for binding and securing their application documents.

Application Submission

Mail or hand deliver completed applications in accordance with the instructions in this announcement. Be aware that the deadline specified in this announcement is either a receipt date or a postmark date deadline. Also note that there are different instructions and addresses for mail delivery and hand delivery of applications. ACF cannot accommodate transmissions of applications by fax or through other electronic media. Therefore, applications transmitted to ACF electronically will not be accepted regardless of date or time of submission and time of receipt.

An applicant should submit an original and two copies of its application by mail to: ACYF Operations Center, 3030 Clarendon Blvd., Suite 240, Arlington, Virginia 22201, (703) 351–7676, (703) 528–0716 (FAX).

An applicant may apply for more than one Regional service area, but must submit a separate application for each service area for which it is applying.

Applications hand-carried by applicants, applicant couriers, or by overnight/express mail couriers shall be considered as meeting an announced deadline date if delivered between the normal working hours of 8 a.m. and 4:30 p.m., to Room 2100, Switzer Building, 330 C St., S.W., Washington, D.C. 20201, Monday through Friday, (excluding Federal holidays). (Applicants are cautioned that express/overnight mail services do not always deliver as agreed.)

Deadlines: Applications will be considered as meeting the above deadline if they are either:

1. received on or before the deadline date at the receipt point specified in this program announcement, or

2. sent on or before the deadline date and received by ACF in time for the independent review.

Applicants are responsible for mailing applications well in advance, when using all mail services, to ensure that applications are received on or before the deadline date.

Applicants are cautioned to request a legibly dated U.S. Postal Service postmark or to obtain a legibly dated receipt from a commercial carrier or U.S. Postal Service. Private Metered postmarks shall not be acceptable as proof of timely mailing.

Late Applications

Applications which do not meet the criteria above are considered late applications. ACF will notify each late applicant that its application will not be considered in the current competition.

ACF may extend the deadline for all applicants because of acts of God such as floods, hurricanes, etc., or when there is a widespread disruption of the mails. However, if ACF does not extend the deadline for all applicants, it may not waive or extend the deadline for any applicants.

Intent to Apply

If you are going to submit an application, you are asked to send a postcard or call in the following information: the name, address, and telephone number of the contact person; the name of the organization; and the Regional service area in which you may submit an application within two weeks of receipt of this announcement to: Administration on Children, Youth and Families, Operations Center, 3030 Clarendon Boulevard, Room 240, Arlington, Va. 22201. The telephone number is 1–800–351–2293. This information will be used to determine the number of expert reviewers needed and to update the mailing list of persons to whom the program announcement is sent.

Acknowledgement of Receipt

Each applicant will be sent a written acknowledgement of receipt by ACF as soon as possible after receipt of an application. Applicants are welcome to provide mailing labels with their applications to help expedite this process. If provided, the mailing label(s) should reflect the mailing address of the *authorizing official* who is applying on behalf of the organization. If acknowledgement of receipt of your application is not received within eight weeks after the deadline date, please notify the ACYF Operations Center by telephone at 1–800–351–2293.

Nonconforming Applications

Applications which are determined to be nonconforming shall not be accepted for processing and shall be returned to the applicant. A grant application may be classified as nonconforming if it does not meet the requirements of this program announcement.

Application Review

Applications will be evaluated and rated according to criteria and priorities which are described in this announcement (see below).

ACF anticipates awarding cooperative agreements for the T/TA grants described in this announcement. A cooperative agreement is a financial assistance award that allows substantial Federal involvement in the activities undertaken with Federal financial support. Supporting the DSQICs through cooperative agreements will ensure cooperation and coordination in the provision of T/TA to Head Start programs and related community child development efforts between the Federal government and the organizations and institutions that operate DSQICs.

Timely applications from eligible applicants will be reviewed and scored competitively. Experts in the field, generally persons from outside the Federal government, will use the evaluation criteria listed below to review and score the applications. The results of this review are the primary factor that will be used in making funding decisions. ACYF may also solicit written comments from ACF Regional Offices, the Head Start Bureau and other Federal agencies with knowledge of the applicant's capability and expertise. These comments, along with those of the expert reviewers, will be considered in making funding

decisions and will be a part of the official application file.

The applicant must demonstrate capacities to work with community-based, family-centered programs, low-income families, and the public and private organizations that relate to them. There must be a congruence of the applicant's mission or purpose with the basic mission of the Head Start program to provide comprehensive child development services for the children of low-income families.

Evaluation Criteria

All timely applications from eligible applicants will be evaluated on the extent to which they meet the following criteria:

a. Objectives and Need for Assistance (10 points)

The applicant clearly and concisely identifies and documents relevant economic, social, financial, institutional and other problems requiring training and technical assistance; and states the principal and subordinate objectives of the proposed DSQIC. Supporting documentation or other testimony from concerned interests other than the applicant on the need for assistance may be used.

b. Results or Benefits Expected (10 points)

The applicant clearly and concisely identifies the specific and measurable results and benefits to be achieved by the proposed DSQIC, which are consistent with the objectives of the proposal, and indicates anticipated contributions to the quality of Head Start services, policy, and practice.

c. Approach (40 points)

The applicant describes how the project will be conducted. The applicant describes: how grantees will be supported in moving toward higher levels of quality and excellence; the levels of T/TA service that will be provided to different categories of grantees and how grantees will be selected for each level of service; the uses that will be made of communication technology and learning modules; how priorities will be set among competing demands; and how work assignments will be managed. The applicant proposes a realistic and comprehensive plan of action for achieving the objectives of the proposed DSQIC; details how the proposed T/TA would be accomplished and lists organizations, consultants, and other key individuals who will work on the project; and describes its approach to ensuring continuous improvement in its efforts to meet the identified needs and to achieve the identified results and benefits.

d. Staff Background and Organization's Experience (20 Points)

The applicant identifies qualified staff with the necessary educational and experiential backgrounds and documents the background of the proposed project director and other proposed project staff (providing name, address, training, most relevant educational background and other qualifying experiences along with résumés and short descriptions of their proposed responsibilities or contributions to the applicant's work plan); the experience of the applicant in administering a project like the one proposed; and the applicant's ability to effectively and efficiently administer this project.

e. Budget Appropriateness and Reasonableness (20 Points)

The applicant clearly describes and justifies as reasonable and realistic the project's costs in view of the activities to be carried out and the anticipated outcomes.

Funding Decisions

After a decision has been reached to disapprove or not fund a grant submission during a given review cycle, a written notice shall be sent to the unsuccessful applicant by the responsible program official within 30 days after that decision.

The anticipated annual funding for the DSQICs will range from a minimum of approximately $475,000 to a maximum of approximately $1,025,000, depending upon the service area. These amounts are generally proportionate to a combination of the number of Head Start children and the number of Head Start grantees in each service area, as compared to other service areas. Below is a list of the projected annual funding level for the initial funding year for each service area. It is anticipated that funding for each of the four possible subsequent years of funding will, at a minimum, equal the funds available for the first year.

Service areas	Number of grantees in service area	Estimated funding
Region I	80	$540,000
Region II	106	820,000
Region III	146	710,000
Region IV	233	1,025,000
Region V	213	1,025,000
Region VI	180	860,000
Region VII	73	550,000
Region VIII	75	575,000
Region IX	79	725,000
Region X	64	475,000
American Indian Program	130	650,000
Migrant Program	25	650,000

Program income must be reported to ACF, and its use, accounted for on the SF 269, must enhance the ACF cooperative agreement projects and benefit the Head Start grantees. The income must be added to funds committed to the cooperative agreement and must be used to further eligible program objectives. There is no requirement to request prior approval to defer the use of program income for a later period of time.

It is anticipated that twelve Regional DSQICs will be funded under this announcement. ACYF intends to award the new cooperative agreements under this announcement during the fourth quarter of FY 1997.

Program Narrative

The program narrative provides a major means by which the application is evaluated and ranked to compete with other applications for available assistance. It should be concise and complete and should address the activity for which Federal funds are being requested. Supporting documents should be included when they can present information clearly and succinctly. Applicants are encouraged to provide information on their organization structure, staff, related experience, and other information considered to be relevant. Awarding offices use this and other information to determine whether the applicant has the capability and resources necessary to carry out the proposed project. It is important, therefore, that this information be included in the application. However, in the narrative, the applicant must distinguish between resources directly related to the proposed project and those which will not be used in the support of the specific project for which funds are being requested.

Cross-referencing should be used rather than repetition. ACF is particularly interested in specific factual information and statements of measurable goals in quantitative terms. Narratives are evaluated on the basis of substance, not length. Extensive exhibits are not required. (Supporting information concerning activities which will not be directly funded by the grant or information which does not directly pertain to an integral part of the grant

funded activity should be placed in an appendix.) Pages should be numbered for easy reference.

Prepare the program narrative statement using the following format and guidance:

1. *Project Summary/Abstract.* A summary of the project description (usually a page or less) with reference to the funding request should be placed directly behind the table of contents or SF–424.

2. *Objectives and Need for Assistance.* Applicants must clearly identify the physical, economic, social, financial, institutional or other T/TA problems requiring solutions. The need for assistance must be demonstrated and the principal and subordinate objectives of the project must be clearly stated; supporting documentation, such as letters of support and testimonials from concerned interests other than the applicant, may be included. Any relevant data based on planning studies should be included or referenced in the endnotes/footnotes. Incorporate demographic data and participant/beneficiary information, as needed. In developing the narrative, the applicant is requested to provide information on the total range of projects currently conducted and supported (or to be initiated), some of which may be outside the scope of the program announcement.

3. *Results or Benefits Expected.* Identify the results and benefits to be derived from the T/TA services to be provided.

4. *Approach.* Outline a plan of action that describes the scope and detail of how the proposed work would be accomplished. Account for all functions or activities identified in the application. Cite factors which might accelerate or decelerate the work and state your reasons for taking your approach rather than others. Describe unusual features of the project such as use of technological innovations, reductions in costs or time, or extraordinary social and community involvement.

Successful applicants will present approaches for providing training and technical assistance to Head Start programs that take into account that some grantees and delegate agencies may have self-sufficient, well-developed and multifaceted T/TA efforts, while other grantees and delegate agencies may have a greater need for T/TA from Regionally-based providers. Additional guidance on project design is provided in Appendix B.

Describe the approaches to be taken and the issues taken into consideration for establishing close working relationships at State levels or with geographically defined clusters of grantees.

Describe how the T/TA services would be designed for or could be adapted for local Head Start programs in a variety of settings including center-based, home-based, combination, part- and full-day programs.

Describe a strategy for working in cooperation with the ACF Regional Office responsible for the service area in which the application proposes to provide T/TA or with the American Indian Program Branch and Migrant Programs Branch, respectively.

5. *Geographic Location.* Give the precise location of the project and the boundaries of the area to be served by the proposed project. Maps or other graphic aides may be attached.

6. *Additional Information.*

Staffing and Position Data—Provide biographical sketches for key personnel proposed and a job description for each vacant key position.

Organization Profiles—Describe your institutional/organizational capability and background in disabilities services, early childhood development/early childhood education, Head Start programs, supporting interagency collaboration in disabilities and T/TA delivery.

Include information on applicant organizations and their cooperating partners such as organizational charts, financial statements, audit reports or statements from a CPA/Licensed Public Accountant, Employer Identification Numbers, names of bond carriers, contact persons and telephone numbers for chief organizational officer(s).

Any nonprofit organization submitting an application must submit proof of its nonprofit status in its application at the time of submission. The nonprofit agency can accomplish this by providing a copy of the applicant's listing in the Internal Revenue Service's (IRS) most recent list of tax-exempt organizations described in Section 501(c)(3) of the IRS code or by providing a copy of the currently valid IRS tax exemption certificate, or by providing a copy of the articles of incorporation bearing the seal of the State in which the corporation or association is domiciled.

For-profit organizations submitting an application must include a written statement which certifies that they operate as a corporation incorporated under the laws of the State of (fill in the blank), and must provide proof of this status.

Third-Party Agreements—Provide written agreements between grantees and subgrantees or subcontractors or other cooperating entities. These agreements may detail scope of work, work schedules, remuneration, and other terms and conditions that structure or define the relationship.

Letters of Support—Provide statements from community, public and commercial leaders who support the project proposed for funding.

Reporting—Provide quarterly progress reports for seriously deficient grantees and, coordinated with the Federal Project Officer and the Regional Coordinator, quarterly statistics on: The number of on-site T/TA visits, the number of conferences/workshops, the number of local T/TA resources accessed, the number of child care programs receiving T/TA services. Provide a quarterly financial statement which includes information on the amount of funds expended during the quarter, the cumulative amount expended, and the amount of funds remaining available.

Note: Eligible applicants must submit a complete application including the required forms included at the end of this program announcement.

In order to be considered for a cooperative agreement under this announcement, an application must be submitted on the forms and following the directions provided in this announcement, all of which are approved by the Office of Management and Budget under Control Number 0970–0139. Required forms include the Standard Form 424 application form and Standard Form 424B, ''Assurances: Non-Construction Programs.''

Applicants must provide a certification concerning lobbying on the form provided (OMB–0348–0046). Prior to receiving an award in excess of $100,000, applicants shall furnish an executed copy of the lobbying certification. Applicants must sign and return the certifications with their application.

Applicants must make the appropriate certification of their compliance with the Drug-Free Work Place Act of 1988. By signing and submitting the application, applicants are providing the certification and need not mail back the certification with the application.

Applicants must make the appropriate certification that they are not presently debarred, suspended or otherwise ineligible for award. By signing and submitting the application, applicants are providing the certification and need not mail back the certification with the application.

Applicants must also understand that they will be held accountable for the smoking prohibition included within

Public Law 103–227, The Pro-Children's Act of 1994. A copy of the **Federal Register** notice which implements the smoking prohibition is included with the forms.

Paperwork Reduction Act of 1995

Under the Paperwork Reduction Act of 1995 (Pub. L. 104–13), the Department is required to submit to the office of Management and Budget (OMB) for review and approval any reporting and record-keeping requirements or program announcements. This program announcement meets all information collection requirements approved for ACF grant applications under OMB Control Number 0970–0139.

An agency may not conduct or sponsor, and a person is not required to respond to, a collection of information unless it displays a currently valid OMB control number.

Additional Information to Assist Applicants in Preparing Their Applications

For an information kit which identifies the Head Start grantees in each Regional service area and which includes a copy of the revised Head Start Performance Standards, a copy of the Head Start regulations and other materials that may be useful in preparing of a response to this announcement, please contact: ACYF Operations Center, 3030 Clarendon Blvd., Suite 240, Arlington, VA 22201, 703–351–7676, 703–528–0716 (FAX).

Six information sharing meetings will be conducted in person or via video-conference in the following locations. Please call the telephone numbers provided for information about exact date, time and place of the meetings:

Washington, D.C., at the Switzer Building, in Room 2100, 330 C St., S.W., the contact: Rosalind Dailey, 202–205–8347.

New York, New York, at Region II Office, call 212–264 2974.

Atlanta, GA, at Region IV Office, call 404–331–2398.

Chicago, Illinois, at Region V Office, call 312–353–8322.

Dallas, Texas, at Region VI Office, call 214–767–9648.

San Francisco, California, at Region IX Office, call 415–437–8481.

The questions and responses discussed at these meetings will be typed and mailed to all participating parties as well as organizations expressing an interest in receiving copies.

Statutory Authority

Catalog of Federal Domestic Assistance (CFDA) number 93.600, Project Head Start.

42 U.S.C. § 9801, *et seq.*, The Head Start Act, as amended.

Dated: April 1, 1997.

James A. Harrell,

Acting Commissioner, Administration on Children, Youth and Families.

Appendix A—Regional Service Areas To Be Served by Disabilities Services Head Start Quality Improvement Centers

Region I Connecticut, Maine, Massachusetts, New Hampshire, Rhode Island, Vermont

Region II New Jersey, New York, Puerto Rico, Virgin Islands

Region III Delaware, Maryland, Pennsylvania, Virginia, Washington, D.C., West Virginia

Region IV Kentucky, North Carolina, South Carolina, Tennessee, Alabama, Florida, Georgia, Mississippi

Region V Michigan, Minnesota, Wisconsin, Illinois, Indiana, Ohio

Region VI Arkansas, Louisiana, Oklahoma, New Mexico, Texas

Region VII Iowa, Kansas, Missouri, Nebraska

Region VIII Colorado, Montana, North Dakota, South Dakota, Utah, Wyoming

Region IX Arizona, California, Hawaii, Nevada, American Samoa, Commonwealth of the Marianas, Guam, Trust Territories

Region X Idaho, Oregon, Washington

American Indian Programs Branch American Indian Head Start grantees in Alaska, Arizona, California, Colorado, Florida, Idaho, Kansas, Michigan, Minnesota, Mississippi, Montana, Nebraska, Nevada, New Mexico, New York, North Carolina, North Dakota, Oklahoma, Oregon, South Dakota, Utah, Washington, Wisconsin, Wyoming

Migrant Programs Branch Migrant Head Start grantees in Alabama, Arizona, Arkansas, California, Colorado, Delaware, Florida, Georgia, Idaho, Illinois, Indiana, Maryland, Michigan, Minnesota, New Jersey, New Mexico, New York, North Carolina, Ohio, Oregon, Pennsylvania, South Carolina, Tennessee, Texas, Utah, Virginia, Washington, Wisconsin

Appendix B—Guidance for the Project Design of a Disabilities Services Head Start Quality Improvement Center

The Regional Disabilities Services Head Start Quality Improvement Centers (DSQICs) are envisioned to be coordinator/information hubs at the Regional/American Indian Programs Branch (AIPB)/Migrant Programs Branch (MPB) level, disseminating and collecting information from the ACF Regional and National Offices, the American Indian Programs and Migrant Programs Branches, and Head Start grantees, as well as the broader child care community to support the ongoing quality improvement of Head Start (including Early Head Start) services to children with disabilities and their families. The DSQICs are encouraged to work with local agencies to develop interagency agreements and partnerships for the delivery of T/TA.

As partners with the Head Start Bureau and ACF Regional Offices, the recipients of these awards are encouraged to propose plans that define strategies to meet the needs of Head Start grantees and delegate agencies as well as the child development field in the areas that they will serve. The strategies should provide for some level of support for all grantees and delegate agencies. The provision of T/TA should begin with a strategic planning process that will include a needs assessment and plan development and will continue with steps for the implementation of T/TA services and for the evaluation of those services. Information may be shared among all T/TA providers and with the Head Start Bureau and ACF Regional Offices.

The DSQICs will have responsibility for assuring that Head Start grantees are informed and supported in efforts to acquire quality T/TA on disabilities services and assuring that T/TA can be provided statewide and to clusters of grantees, as well as to individuals at the grantee level. The DSQICs may consider the development of State/cluster sites. These State/cluster sites, suggested to ACF in consultations carried out in the preparation of this program announcement, are envisioned as extensions of the DSQICs. The number of skilled staff located at the State/cluster site would be dependent upon the size and number of grantees and delegate agencies and within the geographic area covered. Current teaching centers or State/American Indian/Migrant Head Start Association offices might be considered as possible State/cluster sites.

As partners at the state level a significant focus for the DSQICs will be to promote collaboration between Head Start grantees and other programs and agencies in the development of plans for collaborative and coordinated services for preschool children with disabilities. Since 1977 ACYF has charged the Head Start Disabilities T/TA Network to serve as liaisons between Head Start and State Education Agencies (SEAs) for the purpose of developing agreements that support coordinated efforts to serve young children with disabilities. These agreements provide leadership and

guidance for the development of local interagency agreements between Head Start programs and the local education agencies in their community. Written interagency agreements between Head Start representatives and SEAs are in place in most States.

Since Head Start is a Federal program that directly funds local grantees, there is a special need for support of the development of State-level agreements which specifically outline the approach for Head Start and local education agency (LEA) coordination to jointly meet the needs of young children with disabilities, including infants and toddlers, and their families. The SEAs are required by Individual with Disabilities Education Act (IDEA) to develop and implement interagency agreements with agencies serving young children with disabilities. For most agreements, the State Head Start Association and the ACF Regional Office are the Head Start representatives to the agreement.

Head Start programs need ongoing assistance in the development and/or revision of agreements between the SEA and Head Start by soliciting information from Head Start programs on needs and opportunities for collaboration in their State: incorporating input from the Regional Office Coordinator and the State Head Start Association; and preparing/revising an agreement to be signed by the ACF Regional Administrator, the appropriate SEA administrator, State Head Start Association representative, and other agencies participating in the agreement.

These agreements typically describe, at a minimum, how Head Start and the Local Education Agencies should collaborate to serve young children with disabilities, including:

- sharing information on Head Start and State regulations regarding services to young children with disabilities;
- joint Child Find and Screening Activities;
- facilitating Head Start's Child Count report to the LEA;
- coordinated screening, assessment and referral;
- jointly developing and implementing Individualized Education Programs (IEPs);
- promoting smooth transitions from Part H early intervention programs into Head Start, and from Head Start into elementary school programs;
- promoting resource sharing;
- promoting joint training of Head Start and LEA staff and parents on issues regarding disabilities services; and
- addressing the disabilities services needs of children served in that State by Head Start Migrant and Indian programs;
- disseminating information about the agreement and describe how local agencies may acquire assistance in implementing these collaborative practices in their communities.

Additional efforts to support collaborative approaches to services could include:

- facilitating agreements between the Part H Lead Agency of each State and the Head Start programs serving infants and toddlers.
- collaboration between the DSQIC for Regions I–X and the DSQICs for the American Indian Programs and the Migrant Programs to ensure that needs and opportunities for collaboration with the Indian and/or Migrant Programs in each State are represented in the State interagency agreement, and that special issues affecting those programs, are addressed in the agreement. As appropriate, a representative of the Tribal organization will be included as a cosigner to the agreement.

In addition, the DSQICs should work with their ACF Regional Offices, or the American Indian Programs and Migrant Programs Branches to implement T/TA in the following areas:

- Quality improvement:

* Core Head Start Services

+ T/TA resources needed to assure compliance with the Head Start Program Performance Standards in Disabilities Services and to implement program improvement plans and best practices.

+ Needs Assessments using information collected, analyses and syntheses from National Head Start T/TA providers, the Head Start Bureau and ACF Regional Offices, State/cluster levels and local Head Start Programs.

+ Needs assessment by State on needs for T/TA on implementation of early childhood partnership strategies in funding and program delivery.

+ Assistance in designing and implementing a disabilities service plan, through coordination with local education agencies and other community partnerships.

+ Training based on needs assessments and emerging priorities shared by many grantees, i.e. recruitment and enrollment of children with disabilities, including those with more significant disabilities; management practices which provide staff with the supervision, information and support needed to meet identified needs of children and families served; promoting the involvement of parents on all aspects of the child's program, including the child's transition to public school.

+ In collaboration with the American Indian Programs and the Migrant Programs Branches, T/TA especially directed to meet the needs of American Indian and Migrant grantees for information on relevant Regional/State issues, regulations, and available resources or services; promote coordination of joint training opportunities to support the exchange of information between grantees on areas of disabilities service that require cooperation and interaction.

* Early Head Start (EHS)

+ Collaboration with the Early Head Start-National Resource Contract (EHS-NRC) to enhance and reinforce a comprehensive approach to providing T/TA in disabilities services in meeting the multiple needs of families with infants and toddlers and pregnant women.

+ Assistance in ensuring that EHS child and family development program models provide early opportunities for infants and toddlers with disabilities to grow and develop in warm, nurturing and inclusive settings.

+ State and Regional networks for the exchange of models, strategies and materials on partnership approaches to the funding and delivery of high quality, comprehensive early childhood disability services among and across Head Start grantees, child care centers and homes, school-based early childhood programs and other providers and settings serving young children and families.

+ Assistance in the development of agreements between the Part H Lead Agency of each State and the Head Start programs serving infants and toddlers.

+ Assistance to EHS programs to identify and assess a wide variety of resources on disabilities services available in communities.

+ Assistance to EHS programs to ensure continuous learning opportunities for training, supervision and mentoring in response to the ongoing development of new knowledge in disability services across disciplines and to enable the staff to recognize and respond to the best practices, lessons learned and quality goals of EHS.

* Quality Improvement Plans and Monitoring Follow-up

+ Assistance to grantees found to be deficient to ensure that Quality Improvement Plans (QIPs) are implemented and identified deficiencies addressed, when those deficiencies are related to disabilities services.

+ Use of information from monitoring reviews, Program Information Reports (PIR), and data provided by the ACF Regional Office, the American Indian

Programs and the Migrant Programs Branches to plan T/TA for grantees.

+ Development of procedures for grantees to communicate their special needs for T/TA to their Regional cluster coordinators.

In providing T/TA in the above-outlined areas, DSQICs may use the following approaches:

• Forms of collaboration and assistance

* On-site collaboration/assistance

+ On-site T/TA in response to needs identified during the needs assessment process.

+ On-site T/TA to address the development and implementation of local agreements between LEAs and Head Start in keeping with the Performance Standards on disabilities services.

+ Special projects to meet Regional service area needs.

* Workshops and conferences

+ Regional training workshops and institutes for grantees on Head Start-specific topics related to disabilities services as determined by need.

+ Development of topics and schedules of workshops provided at State/cluster levels.

+ Presentations/workshops for State and National Head Start Association conferences and national Head Start Bureau events.

+ Participation in meetings/events sponsored by public and private organizations offering opportunities to provide T/TA-related information to appropriate constituencies.

+ Use of current technologies/approaches, such as distance learning, interactive systems computers, videos, satellite down links, internet, etc., for maximizing the dissemination and provision of T/TA.

* Training and technical assistance institutes

+ Training provided to grantees on-site, in clusters, and/or at State-or Region-wide settings using the train-the-trainer model with Head Start program personnel responsible for leadership on disabilities services.

+ Development and implementation of opportunities for distance learning.

+ Training on newly developed Head Start materials.

+ Assistance in monitor reviewer training.

+ Development and implementation of procedures for grantee staff to engage in inquiry research and in program/curriculum development opportunities.

* Information dissemination/networking

+ Regional information dissemination on T/TA to grantees and State/cluster sites.

+ Technological networks at the Regional level using innovative communication technology, particularly to disseminate information on Head Start policies and regulations.

+ Facilitating Head Start/SEA interagency agreements; facilitating development of agreements between the DSQICs for American Indian and Migrant Programs and Regions I through X to ensure that the needs of children and families in these programs are reflected in the agreements.

+ Linkages with State partners of Head Start programs including the State Education Agency program responsible for assuring implementation of the requirements for special education services to preschool children (under the Individuals with Disabilities Act IDEA) and with the Lead state agency for implementation of Part H of IDEA services for infants and toddlers with disabilities, University Affiliated Programs (UAP) and Developmental Disabilities Councils.

• Collaboration between regional DSQICs and the American Indian and Migrant Programs DSQICs and the programs they serve in the following ways:

+ Making information available to Indian and Migrant programs serving children in their Regions on relevant State or Regional disabilities services issues, e.g., new state regulations on disabilities services, or State/Regional disabilities training or service resources;

+ Inviting Indian and Migrant Head Start programs to participate in DSQIC workshops and training;

+ Providing the Indian and Migrant DSQICs with existing Head Start/SEA Interagency Agreements services in their Region, and the schedule for their development/revision.

• Sharing information and results of evaluations of consultants through the National T/TA Information Resource Bank, such as:

+ Demonstrations of, and information on, and dissemination of materials developed by the national and Regional DSQICs.

+ Collaboration with Head Start-sponsored or related national initiatives, such as Medicaid, immunizations, substance abuse prevention and treatment, and mental health.

+ Information and/or training about Head Start Bureau publications, such as training guides.

+ Maintaining and publishing resource information on statewide T/TA resources directed to issues relevant for early childhood disabilities services.

+ Maintaining a video/materials resource library.

+ Information and demonstrations on training resources which Head Start programs could utilize.

+ Contributing articles to the Head Start Bulletin.

+ Maintaining of up-to-date fact sheets on grantees.

+ Assisting in developing a Regional calendar of T/TA events.

+ Participating in semiannual national T/TA network meetings, along with meetings/conference calls with the Federal Project Officer (FPO).

+ Assisting Head Start programs to identify T/TA resources and service providers in local community and state which may be independently accessed to meet the special needs of Head Start eligible children with disabilities or their parents.

• DSQICs should organize and structure T/TA activities to achieve maximum coordination, efficiency and effectiveness. Suggested approaches include:

+ Assisting in a Regional Coordinating Council comprised of various stakeholders, such as ACF Regional Office staff, the Federal Project Officer from the Head Start Bureau, State Collaboration Project grantees, State Head Start Association representatives and other T/TA providers in the areas of child care, early childhood education, disabilities services, health, family development, community development and program planning. The Council would support the DSQIC in identifying needs for T/TA, developing a Regional T/TA plan, connecting and coordinating services in and among the different levels of the system and to reach out to the community. It would meet regularly to consult with the leadership of the DSQIC in assessing needs, developing a fair balance for the provision of services among grantees, and preparing and updating Regional or T/TA plans.

* State-/cluster-based activities functioning as extensions of the DSQIC to provide joint training opportunities to clusters of grantees that have the same needs based on needs assessments. The use of expert trainers and consultants to provide T/TA to grantees within the cluster and to interact with American Indian, Migrant and State Head Start Associations, State agencies and community organizations to coordinate services and to track relevant State legislation and regulations. Work with ''exemplary'' grantees to help them move forward as the new system is designed. Trainers need a knowledge base and an awareness of adult continuous learning and applicability to issues in the community/program to be served. Large States may have more than

one cluster and smaller States may share clusters of grantees. The American Indian Programs Branch grantees may have up to three cluster offices and the Migrant Programs Branch grantees may have up to two cluster offices. State/cluster site staff could be co-located with other T/TA providers.

* Regular meetings, communications:

+ Use of technology, such as satellites, computers, voice links, internet, etc.

+ Use of interconnected feedback loops for the purpose of issue identification, policy interpretations, evaluation, etc.

* Collaboration with Community-Based Child Care:

+ Assistance to State Head Start Associations, State Collaboration Projects, State and community early childhood agencies and Head Start grantees in systematic approaches to needs, assessment, planning, funding, and staff development in early care, education and disability services.

* Linkages with Federal-State and other partners, such as the Department of Education, federally recognized Tribes, and institutions of higher learning.

• Geographic Coverage

* Types of grantees in service area:

Large/small, rural/urban, center-based, home-based, Early Head Start, full-day, part-day.

* Level of quality among grantees:

+ Assistance to well performing grantees in developing their own T/TA services.

+ Identification of grantees to serve as mentors to new and/or deficient and seriously deficient grantees. Assistance in the management of supplementary grant funds for the mentoring grantees and collection of evaluative information on the mentoring efforts.

+ Assistance in designing T/TA plans for deficient and seriously deficient grantees, at their request and in collaboration with the ACF Regional Office, American Indian and Migrant Programs Branches to enable them to meet the Head Start Program Performance Standards.

• Management and staffing issues (including consultant banks)

* Sufficient DSQIC staff to coordinate training, manage staff and consultant resources, provide necessary subject-specific expertise, and administer cooperative agreement fiscal resources.

* Sufficient leadership and consultant expertise to address all aspects of disabilities services T/TA responsibilities, including the areas of infant.toddler services, accessibility, and developing and implementing local interagency agreements with community partners (e.g., Local Education Agencies, Part H providers) at the regional and State/cluster sites.

* Skilled leadership and support on State disabilities services policy issues, to support efforts of grantees to work with States in planning, monitoring and meeting logistical needs; to participate in State-wide meetings; to coordinate with community/local organizations that provide child care and other services to low income families; and assistance to States in implementing Federal programs that involve the development of child care systems in partnership with communities.

+ Support at State meetings regarding disabilities services issues.

+ Supporting strategic planning and coordinating meetings among State program administrators and community and local organizations that collaborate with Head Start in serving children with disabilities in the development of comprehensive systems.

* Child Care Responsibilities

+ Skilled leadership and support on assessing needs for training and technical assistance on Head Start/Child Care partnership issues related to including children with disabilities.

+ Collaboration with other Federal, State, and local child care and early childhood agencies, programs and professional organizations in training, technical assistance, professional development, and planning efforts related to inclusive services for children with disabilities.

* Consultant Pool

+ A Regional consultant pool, identified, screened, contracted and linked to the National T/TA Information Resource Bank.

+ Provision of orientation and ongoing training for consultants.

+ Management of onsite activities of consultants at the Regional, or State/cluster level.

+ Monitoring and evaluation of Regional-level T/TA and the performance of consultants through onsite observations, interviews with grantee staff, reviews of workshop evaluations, etc.

+ Maintenance of evaluation data on consultants for the use of national network.

* Sufficient staff at State/cluster sites to broker/coordinate local resources, strengthen training and staff development, assess the needs of individual grantees and assist with the development of grantee T/TA plans.

Appendix C—OMB State Single Point of Contact Listing

Arizona
Joni Saad, Arizona State Clearinghouse, 3800 N. Central Avenue, Fourteenth Floor, Phoenix, Arizona 85012, Telephone (602) 280–1315, FAX: (602) 280–8144.

Arkansas
Mr. Tracy Copeland, Manager, State Clearinghouse, Office of Intergovernmental Services, Department of Finance and Administration, 1515 W. 7th St., Room 412, Little Rock, Arkansas 72203 Telephone: (501) 682–1074, FAX: (501) 682–5206.

California
Grants Coordinator, Office of Planning & Research, 1400 Tenth Street, Room 121, Sacramento, California 95814, Telephone: (916) 323–7480, FAX: (916) 323–3018.

Delaware
Francine Booth, State Single Point of Contact Executive Department, Thomas Collins Building, P.O. Box 1401, Dover, Delaware 19903, Telephone: (302) 739–3326, FAX: (302) 739–5661.

District of Columbia
Charles Nichols, State Single Point of Contact, Office of Grants Mgmt. & Dev. 717 14th Street, N.W.–Suite 500, Washington, D.C. 20005, Telephone: (202) 727–6554, FAX: (202) 727–1617.

Florida
Florida State Clearinghouse, Department of Community Affairs, 2740 Centerview Drive, Tallahassee, Florida 32399–2100, Telephone: (904) 922–5438, FAX: (904) 487–2899.

Georgia
Tom L. Reid, III, Administrator, Georgia State Clearinghouse, 254 Washington Street, S.W.–Room 401J, Atlanta, Georgia 30334, Telephone: (404) 656–3855 or (404) 656–3829, FAX: (404) 656–7938.

Illinois
Virginia Bova, State Single Point of Contact, Department of Commerce and Community Affairs, James R. Thompson Center, 100 West Randolph, Suite 3–400, Chicago, Illinois 60601, Telephone: (312) 814–6028, FAX: (312) 814–1800.

Indiana
Amy Brewer, State Budget Agency, 212 State House, Indianapolis, Indiana 46204, Telephone: (317) 232–5619, FAX: (317) 233–3323.

Iowa
Steven R. McCann, Division for Community Assistance, Iowa Department of Economic Development, 200 East Grand Avenue, Des Moines, Iowa 50309, Telephone: (515) 242–4719 FAX: (515) 242–4859.

Kentucky
Ronald W. Cook, Office of the Governor, Department of Local Government, 1024 Capitol Center Drive, Frankfort, Kentucky 40601–8204, Telephone: (502) 573–2382, FAX: (502) 573–2512.

Maine
Joyce Benson, State Planning Office, State House Station #38,
Augusta, Maine 04333, Telephone: (207) 287–3261, FAX: (207) 287–6489.

Maryland
William G. Carroll, Manager, State Clearinghouse for Intergovernmental Assistance, Maryland Office of Planning, 301 W. Preston Street–Room 1104,

Baltimore, Maryland 21201–2365, Staff Contact: Linda Janey, Telephone: (410) 225–4490, FAX: (410) 225–4480.

Michigan

Richard Pfaff, Southeast Michigan Council of Governments, 1900 Edison Plaza, 660 Plaza Drive, Detroit, Michigan 48226, Telephone: (313) 961–4266, FAX: (313) 961–4869.

Mississippi

Cathy Malette, Clearinghouse Officer, Department of Finance and Administration, 455 North Lamar Street, Jackson, Mississippi 39202–3087, Telephone: (601) 359–6762, FAX: (601) 359–6764.

Missouri

Lois Pohl, Federal Assistance Clearinghouse, Office of Administration, P.O. Box 809, Room 760, Truman Building, Jefferson City, Missouri 65102, Telephone: (314) 751–4834, FAX: (314) 751–7819.

Nevada

Department of Administration, State Clearinghouse, Capitol Complex, Carson City, Nevada 89710, Telephone: (702) 687–4065, FAX: (702) 687–3983.

New Hampshire

Jeffrey H. Taylor, Director, New Hampshire Office of State Planning, Attn: Intergovernmental Review Process, Mike Blake, 2½ Beacon Street, Concord, New Hampshire 03301, Telephone: (603) 271–2155, FAX: (603) 271–1728.

New Mexico

Robert Peters, State Budget Division, Room 190 Bataan Memorial Building, Santa Fe, New Mexico 87503, Telephone: (505) 827–3640.

New York

New York State Clearinghouse, Division of the Budget, State Capitol, Albany, New York 12224, Telephone: (518) 474–1605.

North Carolina

Chrys Baggett, Director, N.C. State Clearinghouse, Office of the Secretary of Admin., 116 West Jones Street, Raleigh, North Carolina 27603–8003, Telephone: (919) 733–7232, FAX: (919) 733–9571.

North Dakota

North Dakota Single Point of Contact, Office of Intergovernmental Assistance, 600 East Boulevard Avenue, Bismarck, North Dakota 58504–0170, Telephone: (701) 224–2094, FAX: (701) 224–2308.

Ohio

Larry Weaver, State Single Point of Contact, State Clearinghouse, Office of Budget and Management, 30 East Broad Street, 34th Floor, Columbus, Ohio 43266–0411.

Please direct correspondence and questions about intergovernmental review to: Linda Wise, Telephone: (614) 466–0698, FAX: (614) 466–5400.

Rhode Island

Daniel W. Varin, Associate Director, Department of Administration/Division of Planning, One Capitol Hill, 4th Floor, Providence, Rhode Island 02908–5870, Telephone: (401) 277–2656 FAX: (401) 277–2083.

Please direct correspondence and questions to: Review Coordinator, Office of Strategic Planning.

South Carolina

Omeagia Burgess, State Single Point of Contact, Grant Services, Office of the Governor, 1205 Pendleton Street—Room 477, Columbia, South Carolina 29201, Telephone: (803) 734–0494 FAX: (803) 734–0385.

Texas

Tom Adams, Governors Office, Director, Intergovernmental Coordination, P.O. Box 12428, Austin, Texas 78711, Telephone: (512) 463–1771, FAX: (512) 463–1888.

Utah

Carolyn Wright, Utah State Clearinghouse, Office of Planning and Budget, Room 116, State Capitol, Salt Lake City, Utah 84114, Telephone: (801) 538–1535, FAX: (801) 538–1547.

West Virginia

Fred Cutlip, Director, Community Development Division, W. Virginia Development Office, Building #6, Room 553, Charleston, West Virginia 25305, Telephone: (304) 558–4010, FAX: (304) 558–3248.

Wisconsin

Martha Kerner, Section Chief, State/Federal Relations, Wisconsin Department of Administration, 101 East Wilson Street—6th Floor, P.O. Box 7868, Madison, Wisconsin 53707, Telephone: (608) 266–2125, FAX: (608) 267–6931.

Wyoming

Sheryl Jeffries, State Single Point of Contact, Office of the Governor, State Capital, Room 124, Cheyenne, Wyoming 82002, Telephone: (307) 777–5930, FAX: (307) 632–3909.

Territories

Guam

Mr. Giovanni T. Sgambelluri, Director, Bureau of Budget and Management Research, Office of the Governor, P.O. Box 2950, Agana, Guam 96910, Telephone: 011–671–472–2285, FAX: 011–671–472–2825.

Puerto Rico

Norma Burgos/Jose E. Caro, Chairwoman/Director, Puerto Rico Planning Board, Federal Proposals Review Office, Minillas Government Center, P.O. Box 41119, San Juan, Puerto Rico 00940–1119, Telephone: (809) 727–4444, (809) 723–6190, FAX: (809) 724–3270, (809) 724–3103.

North Mariana Islands

Mr. Alvaro A. Santos, Executive Officer, State Single Point of Contact, Office of Management and Budget, Office of the Governor, Saipan, MP, Telephone: (670) 664–2256, FAX: (670) 664–2272.

Contact Person: Ms. Jacoba T. Seman, Federal Programs Coordinator, Telephone: (670) 644–2289, FAX: (670) 644–2272.

Virgin Islands

Jose George, Director, Office of Management and Budget, #41 Norregade Emancipation Garden Station, Second Floor, Saint Thomas, Virgin Islands 00802

Please direct all questions and correspondence about intergovernmental review to: Linda Clarke, Telephone: (809) 774–0750, FAX: (809) 776–0069.

BILLING CODE 4184–01–P

Appendix D

APPLICATION FOR FEDERAL ASSISTANCE

OMB Approval No. 0348-0043

2. DATE SUBMITTED	Applicant Identifier
3. DATE RECEIVED BY STATE	State Application Identifier
4. DATE RECEIVED BY FEDERAL AGENCY	Federal Identifier

1. TYPE OF SUBMISSION:

Application	Preapplication
☐ Construction	☐ Construction
☐ Non-Construction	☐ Non-Construction

5. APPLICANT INFORMATION

Legal Name:

Organizational Unit:

Address (give city, county, state, and zip code):

Name and telephone number of the person to be contacted on matters involving this application (give area code)

6. EMPLOYER IDENTIFICATION NUMBER (EIN):

☐☐ – ☐☐☐☐☐☐☐

7. TYPE OF APPLICANT: (enter appropriate letter in box) ☐

A. State
B. County
C. Municipal
D. Township
E. Interstate
F. Intermunicipal
G. Special District
H. Independent School Dist.
I. State Controlled Institution of Higher Learning
J. Private University
K. Indian Tribe
L. Individual
M. Profit Organization
N. Other (Specify) _____

8. TYPE OF APPLICATION:

☐ New ☐ Continuation ☐ Revision

If Revision, enter appropriate letter(s) in box(es): ☐ ☐

A. Increase Award B. Decrease Award C. Increase Duration
D. Decrease Duration Other (specify):

_____

9. NAME OF FEDERAL AGENCY:

10. CATALOG OF FEDERAL DOMESTIC ASSISTANCE NUMBER: ☐☐ . ☐☐☐

TITLE:

11. DESCRIPTIVE TITLE OF APPLICANT'S PROJECT:

12. AREAS AFFECTED BY PROJECT (cities, counties, states, etc.):

13. PROPOSED PROJECT:

Start Date	Ending Date

14. CONGRESSIONAL DISTRICTS OF:

a. Applicant	b. Project

15. ESTIMATED FUNDING:

a. Federal	$ .00
b. Applicant	$ .00
c. State	$ .00
d. Local	$ .00
e. Other	$ .00
f. Program Income	$ .00
g. TOTAL	$ .00

16. IS APPLICATION SUBJECT TO REVIEW BY STATE EXECUTIVE ORDER 12372 PROCESS?

a. YES. THIS PREAPPLICATION/APPLICATION WAS MADE AVAILABLE TO THE STATE EXECUTIVE ORDER 12372 PROCESS FOR REVIEW ON:

DATE _____

b. NO ☐ PROGRAM IS NOT COVERED BY E.O. 12372

☐ OR PROGRAM HAS NOT BEEN SELECTED BY STATE FOR REVIEW

17. IS THE APPLICANT DELINQUENT ON ANY FEDERAL DEBT?

☐ Yes If "Yes," attach an explanation. ☐ No

18. TO THE BEST OF MY KNOWLEDGE AND BELIEF, ALL DATA IN THIS APPLICATION/PREAPPLICATION ARE TRUE AND CORRECT, THE DOCUMENT HAS BEEN DULY AUTHORIZED BY THE GOVERNING BODY OF THE APPLICANT AND THE APPLICANT WILL COMPLY WITH THE ATTACHED ASSURANCES IF THE ASSISTANCE IS AWARDED

a. Typed Name of Authorized Representative	b. Title	c. Telephone number
d. Signature of Authorized Representative		e. Date Signed

Previous Editions Not Usable

Standard Form 424 (REV 4-88)
Prescribed by OMB Circular A-102

Authorized for Local Reproduction

BILLING CODE 4184–01–C

Instructions for the SF 424

This is a standard form used by applicants as a required facesheet for preapplications and applications submitted for Federal assistance. It will be used by Federal agencies to obtain applicant certification that States which have established a review and comment procedure in response to Executive Order 12372 and have selected the program to be included in their process, have been given an opportunity to review the applicant's submission.

Item and Entry

1. Self-explanatory.
2. Date application submitted to Federal agency (or State if applicable) & applicant's control number (if applicable).
3. State use only (if applicable).
4. If this application is to continue or revise an existing award, enter present Federal identifier number. If for a new project, leave blank.
5. Legal name of applicant, name of primary organizational unit which will undertake the assistance activity, complete address of the applicant, and name and telephone number of the person to contact on matters related to this application.
6. Enter Employer Identification Number (EIN) as assigned by the Internal Revenue Service.
7. Enter the appropriate letter in the space provided.
8. Check appropriate box and enter appropriate letter(s) in the space(s) provided:
—''New'' means a new assistance award.
—''Continuation'' means an extension for an additional funding/budget period for a project with a projected completion date.
—''Revision'' means any change in the Federal Government's financial obligation or contingent liability from an existing obligation.
9. Name of Federal agency from which assistance is being requested with this application.
10. Use the Catalog of Federal Domestic Assistance number and title of the program under which assistance is requested.
11. Enter a brief descriptive title of the project. If more than one program is involved, you should append an explanation on a separate sheet. If appropriate (e.g., construction or real property projects), attach a map showing project location. For preapplications, use a separate sheet to provide a summary description of this project.
12. List only the largest political entities affected (e.g., State, counties, cities).
13. Self-explanatory.
14. List the applicant's Congressional District and any District(s) affected by the program or project.
15. Amount requested or to be contributed during the first funding/budget period by each contributor. Value of in-kind contributions should be included on appropriate lines as applicable. If the action will result in a dollar change to an existing award, indicate *only* the amount of the change. For decreases, enclose the amounts in parentheses. If both basic and supplemental amounts are included, show breakdown on an attached sheet. For multiple program funding, use totals and show breakdown using same categories as item 15.
16. Applicants should contact the State Single Point of Contact (SPOC) for Federal Executive Order 12372 to determine whether the application is subject to the State intergovernmental review process.
17. This question applies to the applicant organization, of the person who signs as the authorized representative. Categories of debt include delinquent audit disallowances, loans and taxes.
18. To be signed by the authorized representative of the applicant. A copy of the governing body's authorization for you to sign this application as official representative must be on file in the applicant's office. (Certain Federal agencies may require that this authorization be submitted as part of the application.)

BILLING CODE 4184–01–P

BUDGET INFORMATION — Non-Construction Programs

OMB Approval No. 0348-0044

SECTION A – BUDGET SUMMARY

Grant Program Function or Activity (a)	Catalog of Federal Domestic Assistance Number (b)	Estimated Unobligated Funds		New or Revised Budget		
		Federal (c)	Non-Federal (d)	Federal (e)	Non-Federal (f)	Total (g)
1.		$	$	$	$	$
2.						
3.						
4.						
5. TOTALS		$	$	$	$	$

SECTION B – BUDGET CATEGORIES

6 Object Class Categories	GRANT PROGRAM, FUNCTION OR ACTIVITY				Total (5)
	(1)	(2)	(3)	(4)	
a. Personnel	$	$	$	$	$
b. Fringe Benefits					
c. Travel					
d. Equipment					
e. Supplies					
f. Contractual					
g. Construction					
h. Other					
i. Total Direct Charges (sum of 6a - 6h)					
j. Indirect Charges					
k. TOTALS (sum of 6i and 6j)	$	$	$	$	$
7. Program Income	$	$	$	$	$

Authorized for Local Reproduction

Standard Form 424A (4-88)
Prescribed by OMB Circular A-102

BILLING CODE 4184-01-C

Instructions for the SF–424A

General Instructions

This form is designed so that application can be made for funds from one or more grant programs. In preparing the budget, adhere to any existing Federal grantor agency guidelines which prescribe how and whether budgeted amounts should be separately shown for different functions or activities within the program. For some programs, grantor agencies may require budgets to be separately shown by function or activity. For other programs, grantor agencies may require a breakdown by function or activity. Sections A,B,C, and D should include budget estimates for the whole project except when applying for assistance which requires Federal authorization in annual or other funding period increments. In the latter case, Sections A,B,C, and D should provide the budget for the first budget period (usually a year) and Section E should present the need for Federal assistance in the subsequent budget periods. All applications should contain a breakdown by the object class categories shown in Lines a-k of Section B.

Section A. Budget Summary Lines 1–4, Columns (a) and (b)

For applications pertaining to a *single* Federal grant program (Federal Domestic Assistance Catalog number) and *not requiring* a functional or activity breakdown, enter on Line 1 under Column (a) the catalog program title and the catalog number in Column (b).

For applications pertaining to a *single* program *requiring* budget amounts by multiple functions or activities, enter the name of each activity or function on each line in Column (a), and enter the catalog number in Column (b). For applications pertaining to multiple programs where none of the programs require a breakdown by function or activity, enter the catalog program title on each line in *Column* (a) and the respective catalog number on each line in Column (b).

For applications pertaining to *multiple* programs where one or more programs *require* a breakdown by function or activity, prepare a separate sheet for each program requiring the breakdown. Additional sheets should be used when one form does not provide adequate space for all breakdown of data required. However, when more than one sheet is used, the first page should provide the summary totals by programs.

Lines 1–4, Columns (c) through (g.)

For new applications, leave Columns (c) and (d) blank. For each line entry in Columns (a) and (b), enter in Columns (e), (f), and (g) the appropriate amounts of funds needed to support the project for the first funding period (usually a year).

For continuing grant program applications, submit these forms before the end of each funding period as required by the grantor agency. Enter in Columns (c) and (d) the estimated amounts of funds which will remain unobligated at the end of the grant funding period only if the Federal grantor agency instructions provide for this. Otherwise, leave these columns blank. Enter in columns (e) and (f) the amounts of funds needed for the upcoming period. The amount(s) in Column (g) should be the sum of amounts in Columns (e) and (f).

For supplemental grants and changes to existing grants, do not use Columns (c) and (d). Enter in Column (e) the amount of the increase or decrease of Federal funds and enter in Column (f) the amount of the increase or decrease of non-Federal funds. In Column (g) enter the new total budgeted amount (Federal and non-Federal) which includes the total previous authorized budgeted amounts plus or minus, as appropriate, the amounts shown in Columns (e) and (f). The amount(s) in Column (g) should not equal the sum of amounts in Columns (e) and (f).

Line 5—Show the totals for all columns used.

Section B. Budget Categories

In the column headings (1) through (4), enter the titles of the same programs, functions, and activities shown on Lines 1–4, Column (a), Section A. When additional sheets are prepared for Section A, provide similar column headings on each sheet. For each program, function or activity, fill in the total requirements for funds (both Federal and non-Federal) by object class categories.

Lines 6a–i—Show the totals of Lines 6a to 6h in each column.

Line 6j—Show the amount of indirect cost.

Line 6k—Enter the total of amounts on Lines 6i and 6j. For all applications for new grants and continuation grants the total amount in column (5), Line 6k, should be the same as the total amount shown in Section A, Column (g), Line 5. For supplemental grants and changes to grants, the total amount of the increase or decrease as shown in Columns (1)–(4), Line 6k should be the same as the sum of the amounts in Section A, Columns (e) and (f) on Line 5.

BILLING CODE 4184–01–P

SECTION C - NON-FEDERAL RESOURCES

(a) Grant Program	(b) Applicant	(c) State	(d) Other Sources	(e) TOTALS
8.	$	$	$	$
9.				
10.				
11.				
12. TOTALS (sum of lines 8 and 11)	$	$	$	$

SECTION D - FORECASTED CASH NEEDS

	Total for 1st Year	1st Quarter	2nd Quarter	3rd Quarter	4th Quarter
13. Federal	$	$	$	$	$
14. NonFederal					
15. TOTAL (sum of lines 13 and 14)	$	$	$	$	$

SECTION E - BUDGET ESTIMATES OF FEDERAL FUNDS NEEDED FOR BALANCE OF THE PROJECT

(a) Grant Program	FUTURE FUNDING PERIODS (Years)			
	(b) First	(c) Second	(d) Third	(e) Fourth
16.	$	$	$	$
17.				
18.				
19.				
20. TOTALS (sum of lines 16 -19)	$	$	$	$

SECTION F - OTHER BUDGET INFORMATION

(Attach additional Sheets if Necessary)

21. Direct Charges:	22. Indirect Charges:

23. Remarks

SF 424A (4-88) Page 2
Prescribed by OMB Circular A-102

Authorized for Local Reproduction

BILLING CODE 4184-01-C

Line 7—Enter the estimated amount of income, if any, expected to be generated from this project. Do not add or substract this amount from the total project amount. Show under the program narrative statement the nature and source of income. The estimated amount of program income may be considered by the federal grantor agency in determinimg the total amount of the grant.

Section C. Non-Federal-Resources

Lines 8–11—Enter amounts of non-Federal resources that will be used on the grant. If in-kind contributions are included, provide a brief explanation on a separate sheet.

Column (a)—Enter the program titles identical to Column (a), Section A. A breakdown by function or activity is not necessary.

Column (b)—Enter the constribution to be made by the applicant.

Column (c)—Enter the amount of the State's cash and in-kind contribution if the applicant is not a State or State agency. Applicants which are a State or State agencies should leave this column blank.

Column (d)—Enter the amount of cash and in-kind contributions to be made form all other sources.

Column (e)—Enter totals of Columns (b), (c), and (d).

Line 12—Enter the total for each of Columns (b)–(e). The amount in Column (e) should be equal to the amount on Line 5, Column (f), Section A.

Section D. Forecasted Cash Needs

Line 13—Enter the amount of cash needed by quarter from the grantor agency during the first year.

Line 14—Enter the amount of cash from all other sources needed by quarter during the first year.

Line 15—Enter the totals of amounts on Lines 13 and 14.

Section E. Budget Estimates of Federal Funds Needed for Balance of the Project

Lines 16–19—Enter in Column (a) the same grant program titles shown in Column (a), Section A. A breakdown by function or activity is not necessary. For new applications and continuation grant applications, enter in the proper columns amounts of Federal funds which will be needed to complete the program or project over the succeeding funding periods (usually in years). This section need not be completed for revisions (amendments, changes, or supplements) to funds for the current year of existing grants.

If more than four lines are needed to list the program titles, submit additional schedules as necessary.

Lines 20—Enter the total for each of the Columns (b)–(e). When additional schedules are prepared for this Section, annotate accordingly and show the overall totals on this line.

Section F. Other Budget Information

Line 21—Use this space to explain amounts for individual direct object-class cost categories that may appear to be out of the ordinary or to explain the details as required by the Federal grantor agency.

Line 22—Enter the type of indirect rate (provisional, predetermined, final or fixed) that will be in effect during the funding period, the estimated amount of the base to which the rate is applied, and the total indirect expense.

Line 23—Provide any other explanations or comments deemed necessary.

BILLING CODE 4184–01–P

OMB Approval No. 0348-0040

ASSURANCES — NON-CONSTRUCTION PROGRAMS

Note: Certain of these assurances may not be applicable to your project or program. If you have questions, please contact the awarding agency. Further, certain Federal awarding agencies may require applicants to certify to additional assurances. If such is the case, you will be notified.

As the duly authorized representative of the applicant I certify that the applicant:

1. Has the legal authority to apply for Federal assistance, and the institutional, managerial and financial capability (including funds sufficient to pay the non-Federal share of project costs) to ensure proper planning, management and completion of the project described in this application.

2. Will give the awarding agency, the Comptroller General of the United States, and if appropriate, the State, through any authorized representative, access to and the right to examine all records, books, papers, or documents related to the award; and will establish a proper accounting system in accordance with generally accepted accounting standards or agency directives.

3. Will establish safeguards to prohibit employees from using their positions for a purpose that constitutes or presents the appearance of personal or organizational conflict of interest, or personal gain.

4. Will initiate and complete the work within the applicable time frame after receipt of approval of the awarding agency.

5. Will comply with the Intergovernmental Personnel Act of 1970 (42 U.S.C. §§ 4728-4763) relating to prescribed standards for merit systems for programs funded under one of the nineteen statutes or regulations specified in Appendix A of OPM's Standards for a Merit System of Personnel Administration (5 C.F.R. 900, Subpart F).

6. Will comply with all Federal statutes relating to nondiscrimination. These include but are not limited to: (a) Title VI of the Civil Rights Act of 1964 (P.L. 88-352) which prohibits discrimination on the basis of race, color or national origin; (b) Title IX of the Education Amendments of 1972, as amended (20 U.S.C. §§ 1681-1683, and 1685-1686), which prohibits discrimination on the basis of sex; (c) Section 504 of the Rehabilitation Act of 1973, as amended (29 U.S.C. § 794), which prohibits discrimination on the basis of handicaps; (d) the Age Discrimination Act of 1975, as amended (42 U.S.C.§§ 6101-6107), which prohibits discrimination on the basis of age; (e) the Drug Abuse Office and Treatment Act of 1972 (P.L. 92-255), as amended, relating to nondiscrimination on the basis of drug abuse; (f) the Comprehensive Alcohol Abuse and Alcoholism Prevention, Treatment and Rehabilitation Act of 1970 (P.L. 91-616), as amended, relating to nondiscrimination on the basis of alcohol abuse or alcoholism; (g) §§ 523 and 527 of the Public Health Service Act of 1912 (42 U.S.C. 290 dd-3 and 290 ee-3), as amended, relating to confidentiality of alcohol and drug abuse patient records; (h) Title VIII of the Civil Rights Act of 1968 (42 U.S.C. § 3601 et seq.), as amended, relating to nondiscrimination in the sale, rental or financing of housing; (i) any other nondiscrimination provisions in the specific statute(s) under which application for Federal assistance is being made; and (j) the requirements of any other nondiscrimination statute(s) which may apply to the application.

7. Will comply, or has already complied, with the requirements of Titles II and III of the Uniform Relocation Assistance and Real Property Acquisition Policies Act of 1970 (P.L. 91-646) which provide for fair and equitable treatment of persons displaced or whose property is acquired as a result of Federal or federally assisted programs. These requirements apply to all interests in real property acquired for project purposes regardless of Federal participation in purchases.

8. Will comply with the provisions of the Hatch Act (5 U.S.C. §§ 1501-1508 and 7324-7328) which limit the political activities of employees whose principal employment activities are funded in whole or in part with Federal funds.

9. Will comply, as applicable, with the provisions of the Davis-Bacon Act (40 U.S.C. §§ 276a to 276a-7), the Copeland Act (40 U.S.C. § 276c and 18 U.S.C. §§ 874), and the Contract Work Hours and Safety Standards Act (40 U.S.C. §§ 327-333), regarding labor standards for federally assisted construction subagreements.

Standard Form 424B (4-88)
Prescribed by OMB Circular A-102

Authorized for Local Reproduction

10. Will comply, if applicable, with flood insurance purchase requirements of Section 102(a) of the Flood Disaster Protection Act of 1973 (P.L. 93-234) which requires recipients in a special flood hazard area to participate in the program andto purchase flood insurance if the total cost of insurable construction and acquisition is $10,000 or more.

11. Will comply with environmental standards which may be prescribed pursuant to the following: (a) institution of environmental quality control measures under the National Environmental Policy Act of 1969 (P.L. 91-190) and Executive Order (EO) 11514; (b) notification of violating facilities pursuant to EO 11738; (c) protection of wetlands pursuant to EO 11990; (d) evaluation of flood hazards in floodplains in accordance with EO 11988; (e) assurance of project consistency with the approved State management program developed under the Coastal Zone Management Act of 1972 (16 U.S.C. §§ 1451 et seq.); (f) conformity of Federal actions to State (Clear Air) Implementation Plans under Section 176(c) of the Clear Air Act of 1955, as amended (42 U.S.C. § 7401 et seq.); (g) protection of underground sources of drinking water under the Safe Drinking Water Act of 1974, as amended, (P.L. 93-523); and (h) protection of endangered species under the Endangered Species Act of 1973, as amended, (P.L. 93-205).

12. Will comply with the Wild and Scenic Rivers Act of 1968 (16 U.S.C. §§ 1271 et seq.) related to protecting components or potential components of the national wild and scenic rivers system.

13. Will assist the awarding agency in assuring compliance with Section 106 of the National Historic Preservation Act of 1966, as amended (16 U.S.C. 470), EO 11593 (identification and protection of historic properties), and the Archaeological and Historic Preservation Act of 1974 (16 U.S.C. 469a-1 et seq.).

14. Will comply with P.L. 93-348 regarding the protection of human subjects involved in research, development, and related activities supported by this award of assistance.

15. Will comply with the Laboratory Animal Welfare Act of 1966 (P.L. 89-544, as amended, 7 U.S.C. 2131 et seq.) pertaining to the care, handling, and treatment of warm blooded animals held for research, teaching, or other activities supported by this award of assistance.

16. Will comply with the Lead-Based Paint Poisoning Prevention Act (42 U.S.C. §§ 4801 et seq.) which prohibits the use of lead based paint in construction or rehabilitation of residence structures.

17. Will cause to be performed the required financial and compliance audits in accordance with the Single Audit Act of 1984.

18. Will comply with all applicable requirements of all other Federal laws, executive orders, regulations and policies governing this program.

SIGNATURE OF AUTHORIZED CERTIFYING OFFICIAL	TITLE
APPLICANT ORGANIZATION	DATE SUBMITTED

SF 424B (4-88) Back

U.S. Department of Health and Human Services

Certification Regarding Drug-Free Workplace Requirements

Grantees Other Than Individuals

By signing and/or submitting this application or grant agreement, the grantee is providing the certification set out below.

This certification is required by regulations implementing the Drug-Free Workplace Act of 1988, 45 CFR Part 76, Subpart F. The regulations, published in the May 25, 1990 Federal Register, require certification by grantees that they will maintain a drug-free workplace. The certification set out below is a material representation of fact upon which reliance will be placed when the Department of Health and Human Services (HHS) determines to award the grant. If it is later determined that the grantee knowingly rendered a false certification, or otherwise violates the requirements of the Drug-Free Workplace Act, HHS, in addition to any other remedies available to the Federal Government, may taken action authorized under the Drug-Free Workplace Act. False certification or violation of the certification shall be grounds for suspension of payments, suspension or termination of grants, or governmentwide suspension or debarment.

Workplaces under grants, for grantees other than individuals, need not be identified on the certification. If known, they may be identified in the grant application. If the grantee does not identify the workplaces at the time of application, or upon award, if there is no application, the grantee must keep the identity of the workplace(s) on file in its office and make the information available for Federal inspection. Failure to identify all known workplaces constitutes a violation of the grantee's drug-free workplace requirements.

Workplace identifications must include the actual address of buildings (or parts of buildings) or other sites where work under the grant takes place. Categorical descriptions may be used (e.g., all vehicles of a mass transit authority or State highway department while in operation, State employees in each local unemployment office, performers in concert halls or radio studios.)

If the workplace identified to HHS changes during the performance of the grant, the grantee shall inform the agency of the change(s), if it previously identified the workplaces in question (see above).

Definitions of terms in the Nonprocurement Suspension and Debarment common rule and Drug-Free Workplace common rule apply to this certification. Grantees' attention is called, in particular, to the following definitions from these rules:

"Controlled substance" means a controlled substance in Schedules I through V of the Controlled Substances Act (21 USC 812) and as further defined by regulation (21 CFR 1308.11 through 1308.15).

"Conviction" means a finding of guilt (including a plea of nolo contendere) or imposition of sentence, or both, by any judicial body charged with the responsibility to determine violations of the Federal or State criminal drug statutes;

"Criminal drug statute" means a Federal or non-Federal criminal statute involving the manufacture, distribution, dispensing, use, or possession of any controlled substance;

"Employee" means the employee of a grantee directly engaged in the performance of work under a grant, including: (i) All "direct charge" employees; (ii) all "indirect charge" employees unless their impact or involvement is insignificant to the performance of the grant; and, (iii) temporary personnel and consultants who are directly engaged in the performance of work under the grant and who are on the grantee's payroll. This definition does not include workers not on the payroll of the grantee (e.g., volunteers, even if used to meet a matching requirement; consultants or independent contractors not on the grantee's payroll; or employees of subrecipients or subcontractors in covered workplaces).

The grantee certifies that it will or will continue to provide a drug-free workplace by:

(a) Publishing a statement notifying employees that the unlawful manufacture, distribution, dispensing, possession or use of a controlled substance is prohibited in the grantee's workplace and specifying the actions that will be taken against employees for violation of such prohibition;

(b) Establishing an ongoing drug-free awareness program to inform employees about:

(1) The dangers of drug abuse in the workplace; (2) The grantee's policy of maintaining a drug-free workplace; (3) Any available drug counseling, rehabilitation, and employee assistance programs; and, (4) The penalties that may be imposed upon employees for drug abuse violations occurring in the workplace;

(c) Making it a requirement that each employee to be engaged in the performance of the grant be given a copy of the statement required by paragraph (a);

(d) Notifying the employee in the statement required by paragraph (a) that, as a condition of employment under the grant, the employee will:

(1) Abide by the terms of the statement; and, (2) Notify the employer in writing of his or her conviction for a violation of a criminal drug statute occurring in the workplace no later than five calendar days after such conviction;

(e) Notifying the agency in writing, within ten calendar days after receiving notice under subparagraph (d)(2) from an employee or otherwise receiving actual notice of such conviction. Employers of convicted employees must provide notice, including position title, to every grant officer or other designee on whose grant activity the convicted employee was working, unless the Federal agency has designated a central point for the receipt of such notices. Notice shall include the identification number(s) of each affected grant;

(f) Taking one of the following actions, within 30 calendar days of receiving notice under subparagraph (d)(2), with respect to any employee who is so convicted:

(1) Taking appropriate personnel action against such an employee, up to and including termination, consistent with the requirements of the Rehabilitation Act of 1973, as amended; or, (2) Requiring such employee to participate satisfactorily in a drug abuse assistance or rehabilitation program approved for such purposes by a Federal, State, or local health, law enforcement, or other appropriate agency;

(g) Making a good faith effort to continue to maintain a drug-free workplace through implementation of paragraphs (a), (b), (c), (d), (e) and (f).

The grantee may insert in the space provided below the site(s) for the performance of work done in connection with the specific grant (use attachments, if needed):

Place of Performance (Street address, City, County, State, ZIP Code) _____

Check ___ *if there are workplaces on file that are not identified here.*

Sections 76.630(c) and (d)(2) and 76.635(a)(1) and (b) provide that a Federal agency may designate a central receipt point for STATE-WIDE AND STATE AGENCY-WIDE certifications, and for notification of criminal drug convictions. For the Department of Health and Human Services, the central receipt point is: Division of Grants Management and Oversight, Office of Management and Acquisition, Department of Health and Human Services, Room 517-D, 200 Independence Avenue, S.W., Washington, D.C. 20201.

DGMO Form#2 Revised May 1990

BILLING CODE 4184–01–C

Certification Regarding Debarment, Suspension, Ineligibility and Voluntary Exclusion—Lower Tier Covered Transactions

Instructions for Certification

1. By signing and submitting this proposal, the prospective lower tier participant is providing the certification set out below.

2. The certification in this clause is a material representation of fact upon which reliance was placed when this transaction was entered into. If it is later determined that the prospective lower tier participant knowingly rendered an erroneous certification, in addition to other remedies available to the Federal Government the department or agency with which this transaction originated may pursue available remedies, including suspension and/or debarment.

3. The prospective lower tier participant shall provide immediate written notice to the person to which this proposal is submitted if at any time the prospective lower tier participant learns that its certification was erroneous when submitted or had become erroneous by reason of changed circumstances.

4. The terms covered transaction, debarred, suspended, ineligible, lower tier covered transaction, participant, person, primary covered transaction, principal, proposal, and voluntarily excluded, as used in this clause, have the meaning set out in the Definitions and Coverage sections of rules implementing Executive Order 12549. You may contact the person to which this proposal is submitted for assistance in obtaining a copy of those regulations.

5. The prospective lower tier participant agrees by submitting this proposal that, [[Page 33043]] should the proposed covered transaction be entered into, it shall not knowingly enter into any lower tier covered transaction with a person who is proposed for debarment under 48 CFR part 9, subpart 9.4, debarred, suspended, declared ineligible, or voluntarily excluded from participation in this covered transaction, unless authorized by the department or agency with which this transaction originated.

6. The prospective lower tier participant further agrees by submitting this proposal that it will include this clause titled ''Certification Regarding Debarment, Suspension, Ineligibility and Voluntary Exclusion—Lower Tier Covered Transaction,'' without modification, in all lower tier covered transactions and in all solicitations for lower tier covered transactions.

7. A participant in a covered transaction may rely upon a certification of a prospective participant in a lower tier covered transaction that it is not proposed for debarment under 48 CFR part 9, subpart 9.4, debarred, suspended, ineligible, or voluntarily excluded from covered transactions, unless it knows that the certification is erroneous. A participant may decide the method and frequency by which it determines the eligibility of its principals. Each participant may, but is not required to, check the List of Parties Excluded from Federal Procurement and Nonprocurement Programs.

8. Nothing contained in the foregoing shall be construed to require establishment of a system of records in order to render in good faith the certification required by this clause. The knowledge and information of a participant is not required to exceed that which is normally possessed by a prudent person in the ordinary course of business dealings.

9. Except for transactions authorized under paragraph 5 of these instructions, if a participant in a covered transaction knowingly enters into a lower tier covered transaction with a person who is proposed for debarment under 48 CFR part 9, subpart 9.4, suspended, debarred, ineligible, or voluntarily excluded from participation in this transaction, in addition to other remedies available to the Federal Government, the department or agency with which this transaction originated may pursue available remedies, including suspension and/or debarment.

Certification Regarding Debarment, Suspension, Ineligibility and Voluntary Exclusion—Lower Tier Covered Transactions

(1) The prospective lower tier participant certifies, by submission of this proposal, that neither it nor its principals is presently debarred, suspended, proposed for debarment, declared ineligible, or voluntarily excluded from participation in this transaction by any Federal department or agency.

(2) Where the prospective lower tier participant is unable to certify to any of the statements in this certification, such prospective participant shall attach an explanation to this proposal.

Certification Regarding Debarment, Suspension, and Other Responsibility Matters—Primary Covered Transactions

Instructions for Certification

1. By signing and submitting this proposal, the prospective primary participant is providing the certification set out below.

2. The inability of a person to provide the certification required below will not necessarily result in denial of participation in this covered transaction. The prospective participant shall submit an explanation of why it cannot provide the certification set out below. The certification or explanation will be considered in connection with the department or agency's determination whether to enter into this transaction. However, failure of the prospective primary participant to furnish a certification or an explanation shall disqualify such person from participation in this transaction.

3. The certification in this clause is a material representation of fact upon which reliance was placed when the department or agency determined to enter into this transaction. If it is later determined that the prospective primary participant knowingly rendered an erroneous certification, in addition to other remedies available to the Federal Government, the department or agency may terminate this transaction for cause or default.

4. The prospective primary participant shall provide immediate written notice to the department or agency to which this proposal is submitted if at any time the prospective primary participant learns that its certification was erroneous when submitted or has become erroneous by reason of changed circumstances.

5. The terms covered transaction, debarred, suspended, ineligible, lower tier covered transaction, participant, person, primary covered transaction, principal, proposal, and voluntarily excluded, as used in this clause, have the meanings set out in the Definitions and Coverage sections of the rules implementing Executive Order 12549. You may contact the department or agency to which this proposal is being submitted for assistance in obtaining a copy of those regulations.

6. The prospective primary participant agrees by submitting this proposal that, should the proposed covered transaction be entered into, it shall not knowingly enter into any lower tier covered transaction with a person who is proposed for debarment under 48 CFR part 9, subpart 9.4, debarred, suspended, declared ineligible, or voluntarily excluded from participation in this covered transaction, unless authorized by the department or agency entering into this transaction.

7. The prospective primary participant further agrees by submitting this proposal that it will include the clause titled ''Certification Regarding Debarment, Suspension, Ineligibility and Voluntary Exclusion-Lower Tier Covered Transaction,'' provided by the department or agency entering into this covered transaction, without modification, in all lower tier covered transactions and in all solicitations for lower tier covered transactions.

8. A participant in a covered transaction may rely upon a certification of a prospective participant in a lower tier covered transaction that it is not proposed for debarment under 48 CFR part 9, subpart 9.4 debarred, suspended, ineligible, or voluntarily excluded from the covered transaction, unless it knows that the certification is erroneous. A participant may decide the method and frequency by which it determines the eligibility of its principals. Each participant may, but is not required to, check the List of Parties Excluded from Federal Procurement and Nonprocurement Programs.

9. Nothing contained in the foregoing shall be construed to require establishment of a system of records in order to render in good faith the certification required by this clause. The knowledge and information of a participant is not required to exceed that which is normally possessed by a prudent person in the ordinary course of business dealings.

10. Except for transactions authorized under paragraph 6 of these instructions, if a participant in a covered transaction knowingly enters into a lower tier covered transaction with a person who is proposed for debarment under 48 CFR part 9, subpart 9.4, suspended, debarred, ineligible, or voluntarily excluded from participation in this transaction, in addition to other remedies available to the Federal Government, the department or agency may

terminate this transaction for cause or default.

Certification Regarding Debarment, Suspension, and Other Responsibility Matters—Primary Covered Transactions

(1) The prospective primary participant certifies to the best of its knowledge and belief, that it and its principals:

(a) Are not presently debarred, suspended, proposed for debarment, declared ineligible, or voluntarily excluded by any Federal department or agency;

(b) Have not within a three-year period preceding this proposal been convicted of or had a civil judgment rendered against them for commission of fraud or a criminal offense in connection with obtaining, attempting to obtain, or performing a public (Federal, State or local) transaction or contract under a public transaction; violation of Federal or State antitrust statutes or commission of embezzlement, theft, forgery, bribery, falsification or destruction of records, making false statements, or receiving stolen property;

(c) Are not presently indicted for or otherwise criminally or civilly charged by a governmental entity (Federal, State or local) with commission of any of the offenses enumerated in paragraph (1)(b) of this certification; and

(d) Have not within a three-year period preceding this application/proposal had one or more public transactions (Federal, State or local) terminated for cause or default.

(2) Where the prospective primary participant is unable to certify to any of the statements in this certification, such prospective participant shall attach an explanation to this proposal.

Certification Regarding Lobbying

Certification for Contracts, Grants, Loans, and Cooperative Agreements

The undersigned certifies, to the best of his or her knowledge and belief, that:

(1) No Federal appropriated funds have been paid or will be paid, by or on behalf of the undersigned, to any person for influencing or attempting to influence an officer or employee of any agency, a Member of Congress, an officer or employee of Congress, or an employee of a Member of Congress in connection with the awarding of any Federal contract, the making of any Federal grant, the making of any Federal loan, the entering into of any cooperative agreement, and the extension, continuation, renewal, amendment, or modification of any Federal contract, grant, loan, or cooperative agreement.

(2) If any funds other than Federal appropriated funds have been paid or will be paid to any person for influencing or attempting to influence an officer or employee of any agency, a Member of Congress, an officer or employee of Congress, or an employee of a member of Congress in connection with this Federal contract, grant, loan or cooperative agreement, the undersigned shall complete and submit Standard Form-LLL, ''Disclosure Form to Report Lobbying,'' in accordance with its instructions.

(3) The undersigned shall require that the language of this certification be included in the award documents for all subawards at all tiers (including subcontracts, subgrants, and contracts under grants, loans, and cooperative agreements) and that all subrecipients shall certify and disclose accordingly.

This certification is a material representation of fact upon which reliance was placed when this transaction was made or entered into. Submission of this certification is a prerequisite for making or entering into this transaction impose by section 1352, title 31 U.S. Code. Any person who fails to file the required certification shall be subject to a civil penalty of not less than $10,000 and not more than $100,000 for each such failure.

State for Loan Guarantee and Loan Insurance

The undersigned states, to the best of his or her knowledge and belief, that:

If any funds have been paid or will be paid to any person for influencing or attempting to influence an officer or employee of any agency, a Member of Congress, an officer or employee of Congress, or an employee of a Member of Congress in connection with this commitment providing for the United States to insure or guarantee a loan, the undersigned shall complete and submit Standard Form-LLL ''Disclosure Form to Report Lobbying,'' in accordance with its instructions.

Submission of this statement is a prerequisite for making or entering into this transaction imposed by section 1352, title 31, U.S. Code. Any person who fails to file the require statement shall be subject to a civil penalty of not less than $10,000 and not more than $100,000 for each such failure.

_____

Signature

_____

Title

_____

Organization

_____

Date

BILLING CODE 4184–01–P

DISCLOSURE OF LOBBYING ACTIVITIES

Approved by OMB
0348-0046

Complete this form to disclose lobbying activities pursuant to 31 U.S.C. 1352
(See reverse for public burden disclosure.)

1. **Type of Federal Action:** ☐ a. contract b. grant c. cooperative agreement d. loan e. loan guarantee f. loan insurance	2. **Status of Federal Action:** ☐ a. bid/offer/application b. initial award c. post-award	3. **Report Type:** ☐ a. initial filing b. material change **For Material Change Only:** year _____ quarter _____ date of last report _____
4. **Name and Address of Reporting Entity:** ☐ Prime ☐ Subawardee Tier _____, *if known*: **Congressional District**, *if known*:	5. **If Reporting Entity in No. 4 is Subawardee, Enter Name and Address of Prime:** **Congressional District**, *if known*:	
6. **Federal Department/Agency:**	7. **Federal Program Name/Description:** CFDA Number, *if applicable*: _____	
8. **Federal Action Number**, *if known*:	9. **Award Amount**, *if known*: $	
10. a. **Name and Address of Lobbying Entity** (*if individual, last name, first name, MI*):	b. **Individuals Performing Services** (*including address if different from No. 10a*) (*last name, first name, MI*):	
(*attach Continuation Sheet(s) SF-LLL-A, if necessary*)		
11. **Amount of Payment** (*check all that apply*): $ _____ ☐ actual ☐ planned	13. **Type of Payment** (*check all that apply*): ☐ a. retainer ☐ b. one-time fee ☐ c. commission ☐ d. contingent fee ☐ e. deferred ☐ f. other; specify: _____	
12. **Form of Payment** (*check all that apply*): ☐ a. cash ☐ b. in-kind; specify: nature _____ value _____		
14. **Brief Description of Services Performed or to be Performed and Date(s) of Service, including officer(s), employee(s), or Member(s) contacted, for Payment Indicated in Item 11:** (*attach Continuation Sheet(s) SF-LLL-A, if necessary*)		
15. **Continuation Sheet(s) SF-LLL-A attached:** ☐ Yes ☐ No		
16. Information requested through this form is authorized by title 31 U.S.C. section 1352. This disclosure of lobbying activities is a material representation of fact upon which reliance was placed by the tier above when this transaction was made or entered into. This disclosure is required pursuant to 31 U.S.C. 1352. This information will be reported to the Congress semi-annually and will be available for public inspection. Any person who fails to file the required disclosure shall be subject to a civil penalty of not less than $10,000 and not more than $100,000 for each such failure.	**Signature:** _____ **Print Name:** _____ **Title:** _____ **Telephone No.:** _____ **Date:** _____	
Federal Use Only:		**Authorized for Local Reproduction** **Standard Form - LLL**

BILLING CODE 4184–01–C

Certification Regarding Environmental Tobacco Smoke

Public Law 103–227, Part C—Environmental Tobacco Smoke, also known as the Pro-Children Act of 1994 (Act), requires that smoking not be permitted in any portion of any indoor routinely owned or leased or contracted for by an entity and used routinely or regularly for provision of health, day care, education, or library services to children under the age of 18, if the services are funded by Federal programs either directly or through State or local governments, by Federal grant, contract, loan, or loan guarantee. The law does not apply to children's services provided in private residences, facilities funded solely by Medicare or Medicaid funds, and portions of facilities used for inpatient drug or alcohol treatment. Failure to comply with the provisions of the law may result in the imposition of a civil monetary penalty of up to $1000 per day and/or the imposition of an administrative compliance order on the responsible entity.

By signing and submitting this application the applicant/grantee certifies that it will comply with the requirements of the Act. The applicant/grantee further agrees that it will require the language of this certification be included in any subawards which contain provisions for the children's services and that all subgrantees shall certify accordingly.

[FR Doc. 97–8839 Filed 4–7–97; 8:45 am]

BILLING CODE 4184–01–P

DEPARTMENT OF HEALTH AND HUMAN SERVICES

Administration for Children and Families

[Program Announcement No. 93600–97–1]

Availability of Funds and Request for Applications Fiscal Year 1997 Discretionary Announcement for Cooperative Agreements To Support Head Start Quality Improvement Centers

AGENCY: Administration on Children, Youth and Families, ACF, DHHS.

ACTION: Announcement of the availability of fiscal year 1997 funds and request for applications for 16 multi-year Head Start Quality Improvement Centers to provide training and technical assistance to local Head Start projects.

SUMMARY: The Administration for Children and Families, Administration on Children Youth and Families' Head Start Bureau announces the availability of competitively awarded cooperative agreement grants to assist qualified institutions and organizations in the provision of training and technical assistance (T/TA) to local Head Start projects in 16 service areas. The cooperative agreements will support Head Start Quality Improvement Centers (HSQICs). ACF Regions I, III, VII, VIII, IX, X, the American Indian Program and Migrant Program Branches will have one HSQIC each while ACF Regions II, IV, V, and VI will have two HSQICs. The States included in each of these 16 service areas are listed in Appendix A.

DATES: The closing date for receipt of applications under this announcement is June 9, 1997.

FOR FURTHER INFORMATION CONTACT: Questions related to the Program Announcement, please contact the ACYF Operations Center, Technical Assistance Team at 1–800–351–2293. Staff at this center will answer questions regarding the application requirements or refer you to the appropriate contact person in ACYF for programmatic questions. You may also locate frequently asked questions about this program announcement on the ACYF Website at http://www.acf.dhhs.gov.

Background and Program Purpose

Head Start is a national program that provides comprehensive developmental services for preschool children, ages three to five from low-income families and, under the Early Head Start program, for infants, toddlers and pregnant women. An essential feature of every Head Start program is the involvement of parents, both in the development of their children and in the direction of the program at the local level.

Now administered by the Administration for Children and Families, the Head Start program began in 1965 in the Office of Economic Opportunity as an innovative way to serve children and their low-income families. For FY 1997, $3,981,000,000 is available for Head Start and approximately 752,000 children are expected to be enrolled. Approximately 1,430 community-based, public and private non-profit organizations receive Head Start grants and develop unique and innovative programs within a framework of national standards to meet their specific local needs. Head Start links families with other community institutions and local education agencies through both center and home-based programs.

In FY 1994 the Advisory Committee on Head Start Quality and Expansion issued its recommendations for improvement and expansion. It recommended that Head Start (1) Strive to achieve quality and excellence in every local Head Start program, (2) respond flexibly to the needs of the children served and their families and (3) forge new partnerships at the community, State and Federal levels. The Committee found that most Head Start grantees provide high quality services; however, the quality of programs is uneven across the country.

In renewing the Head Start vision in a way that responds more effectively to a changing world, Head Start is continuing to provide high quality comprehensive services and to strive for excellence. As Head Start is expanding and renewing itself, there is a concomitant need for assistance from institutions and organizations that can provide effective and responsive training and technical assistance that support the work of the grantee and delegate agencies that directly provide the services to children and their families.

The Head Start Quality Improvement Centers (HSQICs) created through this announcement will form a regionally-based system, composed of institutions and organizations whose common purpose will be to work with local Head Start programs through training and technical assistance (T/TA). This nationwide T/TA effort is designed to support the continuous improvement of all grantees and delegate agencies as they work to provide high quality and effective services to children and families and address the emerging priorities of child care partnerships, Head Start expansion and welfare reform. The T/TA system reflects a national commitment to quality improvement, local capacity-building and ongoing evaluation.

In previous years, ACF operated its national Head Start T/TA system through contracts, acquiring the services of qualified providers to meet the training and technical assistance needs of local Head Start programs. In this announcement, ACF responds to the recommendations of the Secretary's Advisory Committee on Head Start Quality and Expansion and to consultations with more than 1,000 people in the field of Head Start and early childhood development to redesign its T/TA system. This cooperative agreement approach will provide assistance to institutions and organizations with expertise in the field of early childhood development and education to: Respond to the needs of grantees and delegate agencies and of communities for flexible technical assistance; expand the influence of Head Start as a national laboratory to other community- and academically-based early childhood programs; and to work with grantees and delegate agencies and with communities in

achieving continuous quality improvement of their services for children and low-income families. Rather than a system of T/TA that relies principally on Federal direction and decision-making, this new approach seeks to assist experts in the communities where Head Start programs provide services in becoming collaborators in a renewed quality improvement effort.

This revised Head Start T/TA system will promote excellence by supporting a continuous learning environment for Head Start staff. It will foster partnerships among Head Start programs, communities, academic institutions (two or four year colleges and universities) and governments to engage them in helping children, parents, and staff develop their full potential.

The HSQICs are to work with Head Start grantees to enable Head Start programs to develop the following capacities:

- Provide effective early childhood education programs that model a comprehensive child development approach;
- Enhance the quality of life and maximize the potential of Head Start-eligible children and their families;
- Identify and effectively access a wide variety of resources available to the grantees and delegate agencies, both within and outside Head Start;
- Integrate all of the component resources available to a Head Start program so as to enhance and reinforce a comprehensive approach to families and children;
- Establish and maintain linkages with the child care community to assure effective partnerships among providers of child development programs; and
- Maintain the unique qualities of Head Start and help sustain these qualities through periods of growth and change.

Among the services the HSQICs will provide are the following:

- Provide joint training opportunities with academic institutions for clusters of grantees that have the same needs based on an in-depth needs assessment.
- Interact with Head Start State Associations and American Indian and Migrant Head Start Associations, State agencies and community organizations to coordinate services and to track relevant State legislation and regulations.
- Focus upon management, coordination and facilitation of T/TA services within the Region or sub-Region.
- Enhance local program capacity to ensure continuous improvement.
- Establish and maintain a cadre of qualified, locally-based consultants to provide T/TA.
- Customize services based upon research and supported by state-of-the-art technology.
- Facilitate information sharing and collaboration with stakeholders in Head Start and in the early child care communities as well as academic communities.
- Engage in an ongoing strategic planning process that will allow the system to adapt to a demanding and changing environment.

The HSQICs will each establish structures for the delivery of services that meet the needs of their service area. We expect these structures will vary from HSQIC to HSQIC. These structures might involve creating one or more satellite sites to serve the Head Start grantees in a State, in several States or a cluster of grantees in parts of one or more States. Such State or cluster sites may be used to establish a presence closer to grantee communities. Large States may have more than one cluster site and smaller States may share a cluster site. The American Indian Programs Branch's HSQIC may have up to three cluster sites and the Migrant Programs Branch's HSQIC may have up to two cluster sites. In other instances, a HSQIC might assign staff within its central office to serve as liaison to grantees in a State or part of a State. Applicants are encouraged to propose efficient and effective approaches to achieving this kind of geographic proximity.

It is assumed that Head Start grantees and delegate agencies will have varying levels of T/TA needs and will, therefore, seek varying levels of assistance from this project.

HSQICs will be responsible for fulfilling the program goals and objectives outlined in their applications, including responsibilities for directing, managing and implementing programs of training and technical assistance for the Regions that they serve. These programs should be tailored to meet the needs of the various Head Start grantees, the state of the field of early childhood, and the existing resources within the Region or sub-Region.

Additional information about the range of program areas and needs of Head Start grantees and guidance to approaches to training and technical assistance is provided in Appendix B.

Federal Involvement

Federal involvement in the HSQICs will include substantial roles for the Head Start Bureau, which includes the American Indian Programs Branch and the Migrant Programs Branch, and the ACF Regional Offices. Substantial Head Start Bureau and ACF Regional Office involvement with the HSQIC will occur when:

- Changes in initiatives or national Head Start policy need to be communicated to the HSQIC because of the effect on the Head Start programs with which the HSQICs are working;
- Federal approval is needed for the HSQIC to select or award a subgrant or contract;
- Federal consultation and approval is needed in the selection of a project director;
- Federal collaboration or joint planning and participation in conferences or meetings with Head Start programs and child development professionals will achieve efficiencies and more effective agendas; and
- Participation on the HSQIC's Regional T/TA Coordinating Council with others, as described in Appendix B, will assist the HSQIC provider in setting overall policies and in conducting an ongoing evaluation of the T/TA provided.

The roles of the Head Start Bureau and ACF Regional Offices are as follows:

The Head Start Bureau will:

- Provide leadership and support for the national Head Start T/TA system, which includes the use of national contractors and HSQICs to support meetings, program monitoring, materials development and other specific needs;
- Set Head Start program priorities and formulate new initiatives that may affect the plans and priorities of the HSQICs, and consult regularly with the HSQICs to ensure that they are fully informed of these national priorities and initiatives;
- Set standards for the HSQICs in the provision of quality Head Start T/TA services for children and families;
- Foster collaboration within and outside of Head Start, develop partnerships among Federal programs, and promote partnerships with the business community;
- Conduct semiannual T/TA meetings, to which the HSQICs will be invited; and
- Monitor the HSQICs to ensure accountability and fiscal responsibility throughout the T/TA system.

The ACF Regional Offices and the Head Start Bureau's American Indian Programs Branch and Migrant Programs Branch will each:

- Appoint a T/TA coordinator to coordinate Regional or sub-Regional T/TA services and to serve as a liaison with the HSQIC;
- Participate in the HSQIC's Regional or sub-Regional Coordinating Council, as described in Appendix B;
- Review a summary of the needs assessments and the T/TA plans for grantees in the Region or sub-Region in order to effectively coordinate T/TA activities;
- Conduct bimonthly (every other month) conference calls or Regional or sub-Regional T/TA coordinating meetings;
- Attend national T/TA meetings;
- Seek out collaborations within and outside the Head Start program by participating on the HSQIC's Regional or sub-Regional Coordinating Council; exhibiting leadership in coordinating child care/Head Start partnerships and working with the Head Start State Collaboration grantees;
- Annually review all services performed by the Regional HSQIC prior to submission of the continuation application in order to provide relevant consultation to the HSQIC and Regional or sub-Regional coordination;

- Conduct reviews and manage the follow-up process for deficient grantees, i.e., carry out joint planning with the HSQIC designed to address identified deficiencies and to identify the T/TA needed by deficient grantees in order to implement their Quality Improvement Plans (QIPs); and
- Encouraging well-performing grantees to develop their own T/TA plans and to implement their own T/TA.

Program Duration

This announcement is soliciting applications for project periods up to five years. Awards, on a competitive basis, will be for a one-year budget period. Applications for continuation cooperative agreements funded under these awards beyond the one-year budget period, but within the five-year project period, will be entertained in subsequent years on a noncompetitive basis, subject to the availability of funds, satisfactory progress of the cooperative agreement grantee and a determination that continued funding would be in the best interest of the government.

Eligible Applicants

Public, private nonprofit, and private for-profit organizations are eligible to apply for these cooperative agreements. It should be noted that for-profit organizations must waive their fee/profit.

Only incorporated agencies and organizations, not individuals, are eligible to apply. On all applications developed jointly by more than one agency or organization, the application must identify only one organization as the lead organization and the official applicant. The other organizations may be included as participants, subgrantees or subcontractors.

Before the applications are reviewed, each application will be screened to determine that the applicant organization is an eligible applicant as specified. Ineligible applicants will be notified at that time.

Project Development

Applicants are urged to discuss their interests and ideas for developing HSQICs early in the planning stage with local Head Start grantees and appropriate State, Regional, and local agencies. Community support should be encouraged by providing opportunities for public and private participation in the planning and development phases.

This program is covered under Executive Order 12372, ''Intergovernmental Review of Federal Programs,'' and 45 CFR Part 100, ''Intergovernmental Review of Health and Human Services Program and Activities.''

Under the Executive Order, States may design their own processes for reviewing and commenting on proposed Federal assistance under covered programs. All jurisdictions which participate in the Executive Order process have established Single Points of Contact (SPOCs). A list of the Single Points of Contact for each State and Territory is included in this program announcement as Appendix C. Applicants from participating jurisdictions should contact their SPOCs as soon as possible to alert them to the prospective applications and to receive instructions. Applicants must submit any required material to the SPOCs as soon as possible so that the ACF program office can obtain and review SPOC comments as part of the award process. The applicant must submit all required materials, if any, to the SPOC and indicate the date of this submittal (or the date of contact if no submittal is required) on the Standard Form 424, item 16a. Under 45 CFR 100.8(a)(2), a SPOC has 60 days from the application deadline to comment on proposed new and competing continuation awards. SPOCs are encouraged to eliminate the submission of routine endorsements as official recommendations. Additionally, SPOCs are requested to clearly differentiate between mere advisory comments and those official State process recommendations which may trigger the ''accommodate or explain'' rule. When comments are submitted directly to ACF, they should be addressed to: Department of Health and Human Services, Head Start Bureau, Administration on Children, Youth and Families, P.O. Box 1182, 330 C Street, S.W., Washington, D.C. 20201.

Completing the Application

In preparing the application, use standard English language and avoid jargon. For the program narrative, type using black print no smaller than 12 pitch or 12 point size. An application may not exceed 250 double-spaced pages inclusive of resumes, charts and appendices. If applications exceed 250 double-spaced pages, the other pages will be removed from the application and not considered by the reviewers.

Each copy should be secured with a binder clip in the upper left-hand corner. The application must be paginated beginning with the Standard Form 424 (SF–424) and also contain a table of contents listing each section of the application with the respective pages. To facilitate handling, do not use covers, ring binders or tabs. Applicants are requested not to send pamphlets, brochures, or other printed materials as these pose xeroxing difficulties nor should any video material be submitted. These materials, if submitted, will not be included in the review process if they exceed the page limitation. Each page of the application will be counted to determine total length. Applicants are advised that the copies of application submitted, not the original, will be reproduced by the Federal government for review.

Instructions for completing the forms are found either on the reverse sides of the forms or on supplemental pages.

Additional guidance may be provided in the program announcement. If more space is needed than is provided, use a blank sheet of paper to complete the item, using the identical format. Clearly identify the continuation page as such, and the information items contained thereon, and attach the page after the appropriate page of the application. Computer-generated facsimiles may be substituted for any of the forms provided in this packet. Such substitute forms should be printed in black ink and must maintain the exact wording and format of the government-printed forms, including all captions and spacing. Any deviations may be grounds for ACF to reject the entire application.

Additional note: For SF–424 item ''Federal Identifier,'' if the applicant organization currently has a payment account with the Department of Health and Human Services, cite the Payee EIN or PIN in the ''Federal Identifier'' block.

Assembling

To facilitate the review and processing of the application by the awarding office, all pages should be numbered and preceded by a table of contents. Assemble the application with the cover letter (if provided) on top followed by a table of contents, the SF–424 series forms, the program narrative, and any remaining documents. Completed applications should be signed and dated in ink by the authorized official of the applicant organization. An original and two copies of the application should be provided. Applicants may omit from the application copies which will be made available to the non-Federal reviewers that specify salary rates or amounts for individuals identified in the application budget. Rather, only summary information is required.

Applicants are encouraged to use the least costly, but most efficient method for binding and securing their application documents.

Application Submission

Mail or hand deliver completed applications in accordance with the instructions in this announcement. Be

aware that the deadline specified in this announcement is either a 'receipt date' or a 'postmark date' deadline. Also note that there are different instructions and addresses for mail delivery and hand delivery of applications. ACF cannot accommodate transmissions of applications by fax or through other electronic media. Therefore, applications transmitted to ACF electronically will not be accepted regardless of date or time of submission and time of receipt.

An applicant should submit an original and two copies of its application by mail to: ACYF Operations Center, 3030 Clarendon Blvd., Room 240, Arlington, Virginia 22201, (703) 351–7676, (703) 528–0716 (FAX).

An applicant may apply for more than one Regional or sub-Regional service area, but must submit a separate application for each service area for which it is applying.

Applications hand-carried by applicants, applicant couriers, or by overnight/express mail couriers shall be considered as meeting an announced deadline date if delivered between the normal working hours of 8 a.m. and 4:30 p.m., to Room 240, 3030 Clarendon Blvd., Arlington, Virginia, Monday through Friday, (excluding Federal holidays). (Applicants are cautioned that express/overnight mail services do not always deliver as agreed.)

The closing date for the submission of applications under this announcement is June 9, 1997.

Deadlines: Applications will be considered as meeting the above deadline if they are either:

1. received on or before the deadline date at the receipt point specified in this program announcement, or
2. sent on or before the deadline date and received by ACF in time for the independent review.

Applicants are responsible for mailing applications well in advance, when using all mail services, to ensure that applications are received on or before the deadline date.

Applicants are cautioned to request a legibly dated U.S. Postal Service postmark or to obtain a legibly dated receipt from a commercial carrier or U.S. Postal Service. Private metered postmarks shall not be acceptable as proof of timely mailing.

Late Applications

Applications which do not meet the criteria above are considered late applications. ACF will notify each late applicant that its application will not be considered in the current competition.

ACF may extend the deadline for all applicants because of acts of God such as floods, hurricanes, etc., or when there is a widespread disruption of the mails. However, if ACF does not extend the deadline for all applicants, it may not waive or extend the deadline for any applicants.

Intent To Apply

If you are going to submit an application, send a postcard or call in the following information: the name, address, and telephone number of the contact person; the name of the organization; and the Regional or sub-Regional service area in which you may submit an application within two weeks of receipt of this announcement to: Administration on Children, Youth and Families, Operations Center, 3030 Clarendon Boulevard, Room 240, Arlington, Va. 22201. The telephone number is 1–800–351–2293. This information will be used to determine the number of expert reviewers needed and to update the mailing list of persons to whom the program announcement is sent.

Acknowledgement of Receipt

Each applicant will be sent a written acknowledgement of receipt by ACF as soon as possible after receipt of an application. Applicants are welcome to provide a mailing label with their application to help expedite this process. If provided, the mailing label should reflect the mailing address of the authorizing official who is applying on behalf of the organization. If acknowledgment of receipt of your application is not received within eight weeks after the deadline date, please notify the ACYF Operations Center by telephone at 1–800–351–2293.

Nonconforming Applications

Applications which are determined to be nonconforming shall not be accepted for processing and shall be returned to the applicant. A grant application may be classified as nonconforming if it does not meet the requirements of this program announcement.

Application Review

Applications will be evaluated and rated according to criteria and priorities which are established for the particular grant program involved and which are described in this announcement (see below).

ACF anticipates awarding cooperative agreements for the T/TA grants described in this announcement. A cooperative agreement is a financial assistance award that allows substantial Federal involvement in the activities undertaken with Federal financial support. Supporting the HSQICs through cooperative agreements will ensure cooperation and coordination in the provision of T/TA to Head Start programs and related community child development efforts between the Federal government and the organizations and institutions that operate HSQICs.

Timely applications from eligible applicants will be reviewed and scored competitively. Experts in the field, generally persons from outside the Federal government, will use the evaluation criteria listed below to review and score the applications. The results of this review are the primary factor in making funding decisions. ACYF may also solicit written comments from ACF Regional Offices, the Head Start Bureau and other Federal agencies with knowledge of the applicant's capability and expertise. These comments, along with those of the expert reviewers, will be considered in making funding decisions and will be a part of the official application file.

The applicant must demonstrate capacities to work with community-based, family-centered programs, low-income families, and the public and private organizations that relate to them. There must be a congruence of the applicant's mission or purpose with the basic mission of the Head Start program to provide comprehensive child development services for the children of low-income families.

Evaluation Criteria

All timely applications from eligible applicants will be evaluated on the extent to which they meet the following criteria:

a. *Objectives and Need for Assistance* (10 points) The applicant clearly and concisely identifies and documents relevant economic, social, financial, institutional and other problems requiring training and technical assistance; and states the principal and subordinate objectives of the proposed HSQIC. Supporting documentation or other testimony from concerned interests other than the applicant on the need for assistance may be used.

b. *Results or Benefits Expected* (10 points) The applicant clearly and concisely identifies the specific and measurable results and benefits to be achieved by the proposed HSQIC, which are consistent with the objectives of the proposal, and indicates anticipated contributions to the quality of Head Start services, policy, and practice.

c. *Approach* (40 points) The applicant describes how the project will be conducted. The applicant describes: How grantees will be supported in moving toward higher levels of quality and excellence; the levels of training and technical assistance service that will be provided to different categories of

grantees and how grantees will be selected for each level of service; the uses that will be made of communication technology and learning modules; how priorities will be set among competing demands; and how work assignments will be managed. The applicant proposes a realistic and comprehensive plan of action for achieving the objectives of the proposed HSQIC; details how the proposed training and technical assistance would be accomplished and lists organizations, consultants, and other key individuals who will work on the project; and describes its approach to ensuring continuous improvement in its efforts to meet the identified needs and to achieve the identified results and benefits.

d. *Staff Background and Organization's Experience* (20 points) The applicant identifies qualified staff with the necessary educational and experiential backgrounds and documents the background of the proposed project director and other proposed project staff (providing name, address, training, most relevant educational background and other qualifying experiences along with resumes and short descriptions of their proposed responsibilities or contributions to the applicant's work plan); the experience of the applicant in administering a project like the one proposed; and the applicant's ability to effectively and efficiently administer this project.

e. *Budget Appropriateness and Reasonableness* (20 Points) The applicant clearly describes and justifies as reasonable and realistic the project's costs in view of the activities to be carried out and the anticipated outcomes.

Funding Decisions

After a decision has been reached to disapprove or not fund a grant submission during a given review cycle, a written notice shall be sent to the unsuccessful applicant by the responsible program official within 30 days after that decision.

After Federal funds are exhausted for a grant competition, applications which have been independently reviewed and ranked but have no final disposition (neither approved nor disapproved for funding) may again be considered for funding. Reconsideration may occur at any time funds become available within 12 months following ranking. ACF does not select from multiple ranking lists for a program. Therefore, should a new competition be scheduled and applications remain ranked without final disposition, applicants are informed of their opportunity to reapply for the new competition, to the extent practical.

The anticipated annual funding for the HSQICs will range from a minimum of approximately $775,000 to a maximum of approximately $2,400,000, depending upon the service area. These amounts are generally proportionate to a combination of the number of Head Start children and the number of Head Start grantees in each service area, as compared to other service areas. Below is a list of the projected annual funding level for the initial funding year for each service area. It is anticipated that funding for each of the four possible subsequent years of funding will, at a minimum, equal the funds available for the first year.

Service areas	Number of grantees in service area	Estimated funding
Region I	80	$1,164,170
Region II(a)	92	1,718,000
Region II(b)	14	778,050
Region III	146	1,970,700
Region IV(a)	118	1,711,000
Region IV(b)	115	2,330,000
Region V(a)	88	1,519,000
Region V(b)	125	2,188,500
Region VI(a)	86	1,431,490
Region VI(b)	94	1,656,000
Region VII	73	1,204,350
Region VIII	75	1,273,390
Region IX	79	2,374,520
Region X	64	922,040
American Indian Programs	130	1,512,500
Migrant Programs	25	1,696,290

Program income must be reported to ACF, and its use, accounted for on the SF 269, must enhance the ACF cooperative agreement projects and benefit the Head Start grantees. The income must be added to funds committed to the cooperative agreement and must be used to further eligible program objectives. There is no requirement to request prior approval to defer the use of program income for a later period of time.

It is anticipated that eight Regional and eight sub-Regional HSQICs will be funded under this announcement. ACYF intends to award the new cooperative agreements under this announcement during the third or fourth quarters of FY 1997.

Program Narrative

The program narrative provides a major means by which the application is evaluated and ranked to compete with other applications for available assistance. It should be concise and complete and should address the activity for which Federal funds are being requested. Supporting documents should be included when they can present information clearly and succinctly. Applicants are encouraged to provide information on their organization structure, staff, related experience, and other information considered to be relevant. Awarding offices use this and other information to determine whether the applicant has the capability and resources necessary to carry out the proposed project. It is important, therefore, that this information be included in the application. However, in the narrative, the applicant must distinguish between resources directly related to the proposed project and those which will not be used in the support of the specific project for which funds are being requested.

Cross-referencing should be used rather than repetition. ACF is particularly interested in specific factual information and statements of measurable goals in quantitative terms. Narratives are evaluated on the basis of substance, not length. Extensive exhibits are not required. (Supporting information concerning activities which will not be directly funded by the grant or information which does not directly pertain to an integral part of the grant funded activity should be placed in an appendix.) Pages should be numbered for easy reference.

Prepare the program narrative statement using the following format and guidance:

1. *Project Summary/Abstract*. A summary of the project description (usually a page or less) with reference to the funding request should be placed directly behind the table of contents or SF–424.

2. *Objectives and Need for Assistance*. Applicants must clearly identify the physical, economic, social, financial, institutional or other T/TA problems requiring solutions. The need for assistance must be demonstrated and the principal and subordinate objectives of the project must be clearly stated; supporting documentation, such as letters of support and testimonials from concerned interests other than the applicant, may be included. Any relevant data based on planning studies should be included or referenced in the endnotes/footnotes. Incorporate demographic data and participant/beneficiary information, as needed. In developing the narrative, the applicant is requested to provide information on the total range of projects currently conducted and supported (or to be initiated), some of which may be outside the scope of the program announcement.

3. *Results or Benefits Expected*. Identify the results and benefits to be derived from the T/TA services to be provided.

4. *Approach*. Outline a plan of action that describes the scope and detail of how the proposed work would be accomplished. Account for all functions or activities identified in the

application. Cite factors which might accelerate or decelerate the work and state your reasons for taking your approach rather than others.

Describe unusual features of the project such as use of technological innovations, reductions in costs or time, or extraordinary social and community involvement.

Successful applicants will present approaches for providing training and technical assistance to Head Start programs that take into account that some grantees and delegate agencies may have self-sufficient, well-developed and multifaceted T/TA efforts, while other grantees and delegate agencies may have a greater need for T/TA from Regionally-based providers. Additional guidance on project design is provided in Appendix B.

Describe the approaches to be taken and the issues taken into consideration for establishing close working relationships at State levels or with geographically defined clusters of grantees.

Describe how the T/TA services would be designed for or could be adapted for local Head Start programs in a variety of settings including center-based, home-based, combination, part- and full-day programs.

Describe a strategy for working in cooperation with the ACF Regional Office responsible for the service area in which the application proposes to provide T/TA or with the American Indian Program Branch and Migrant Programs Branch, respectively.

5. *Geographic Location.* Give the precise location of the HSQIC and/or State/cluster sites and the boundaries of the area to be served by the proposed project. Maps or other graphic aides may be attached.

6. *Additional Information.* Staffing and Position Data—Provide biographical sketches for key personnel proposed and a job description for each vacant key position.

Organization Profiles—Describe your institutional/organizational capability and background in early childhood development/early childhood education, Head Start programs, child care, family support, community building, higher education/training and T/TA delivery.

Include information on applicant organizations and their cooperating partners such as organizational charts, financial statements, audit reports or statements from a CPA/Licensed Public Accountant, Employer Identification Numbers, names of bond carriers, contact persons and telephone numbers for chief organizational officer(s).

Any nonprofit organization submitting an application must submit proof of its nonprofit status in its application at the time of submission. The nonprofit agency can accomplish this by providing a copy of the applicant's listing in the Internal Revenue Service's (IRS) most recent list of tax-exempt organizations described in Section 501(c)(3) of the IRS code or by providing a copy of the currently valid IRS tax exemption certificate, or by providing a copy of the articles of incorporation bearing the seal of the State in which the corporation or association is domiciled.

For profit organizations submitting an application must include a written statement which certifies that they operate as a corporation incorporated under the laws of the State of [fill in the blank], and must provide proof of this status.''

Third-Party Agreements—Provide written agreements between grantees and subgrantees or subcontractors or other cooperating entities. These agreements may detail scope of work, work schedules, remuneration, and other terms and conditions that structure or define the relationship.

Letters of Support—Provide statements from community, public and commercial leaders who support the project proposed for funding.

Reporting—Provide quarterly progress reports for seriously deficient grantees, and describe how they were generated and coordinated with the Federal Project Officer and the Regional Coordinator i.e., quarterly statistics on: the number of on-site T/TA visits, the number of conferences/workshops, the number of local T/TA resources accessed, the number of child care programs receiving T/TA services.

Provide a quarterly financial statement which includes information on the amount of funds expended during the quarter, the cumulative amount expended, and the amount of funds remaining available.

Note: Eligible applicants must submit a complete application including the required forms included at the end of this program announcement.

In order to be considered for a cooperative agreement under this announcement, an application must be submitted on the forms and follow the directions provided in this announcement, all of which are approved by the Office of Management and Budget under Control Number 0970–0139. Required forms include the Standard Form 424 application form and Standard Form 424B, ''Assurances: Non-Construction Programs.''

Applicants must provide a certification concerning lobbying on the form provided (OMB–0348–0046). Prior to receiving an award in excess of $100,000, applicants shall furnish an executed copy of the lobbying certification. Applicants must sign and return the certifications with their application.

Applicants must make the appropriate certification of their compliance with the Drug-Free Work Place Act of 1988. By signing and submitting the application, applicants are providing the certification and need not mail back the certification with the application.

Applicants must make the appropriate certification that they are not presently debarred, suspended or otherwise ineligible for award. By signing and submitting the application, applicants are providing the certification and need not mail back the certification with the application.

Applicants must also understand that they will be held accountable for the smoking prohibition included within P.L. 103–227, The Pro-Children's Act of 1994. A copy of the **Federal Register** notice which implements the smoking prohibition is included with the forms.

Paperwork Reduction Act of 1995

Under the Paperwork Reduction Act of 1995 (Pub. L. 104–13), the Department is required to submit to the Office of Management and Budget (OMB) for review and approval any reporting and record-keeping requirement or program announcements. This program announcement meets all information collection requirements approved for ACF grant applications under OMB Control Number 0970—139.

An agency may not conduct or sponsor, and a person is not required to respond to, a collection of information unless it displays a currently valid OMB control number.

Additional Information To Assist Applicants in Preparing Their Applications

For an information kit which identifies the Head Start grantees in each Regional and sub-Regional service area and which includes a copy of the revised Head Start Performance Standards, a copy of the Head Start regulations and other materials that may be useful in preparing of a response to this announcement, please contact: ACYF Operations Center, 3030 Clarendon Blvd., Suite 240, Arlington, Virginia 22201, 703–351–7676, 703–528–0716 (FAX).

Six information sharing meetings will be conducted in person or via video-

conference in the following locations and at the following times: (Please call the telephone numbers below for information about exact time and place):

- Washington, D.C., Switzer Building, Room 2100, 330 C Street, S.W., Contact: Rosalind Dailey, (202) 205–8347.
- New York, NY, ACF Region II, (212) 264–2974.
- Atlanta, GA, ACF Region IV, (404) 331–2398.
- Chicago, IL, ACF Region V, (312) 353–8322.
- Dallas, TX, ACF Region VI, (214) 767–9648.
- San Francisco, CA, ACF Region IX, (415) 437–8481.

The questions and responses discussed at these meetings will be shared with all participating parties as well as organizations expressing an interest in receiving copies.

Statutory Authority: Catalog of Federal Domestic Assistance (CFDA) number 93.600.

Dated: March 31, 1997.

James A. Harrell,

Deputy Commissioner, Administration on Children, Youth and Families.

Appendix A—Regional and Sub-Regional Service Areas To Be Served by Individual Head Start Quality Improvement Centers

Region I Connecticut, Maine, Massachusetts, New Hampshire, Rhode Island, Vermont

Region II
- Sub-region (a): New Jersey, New York
- Sub-region (b): Puerto Rico, Virgin Islands

Region III Delaware, Maryland, Pennsylvania, Virginia, Washington, D.C., West Virginia

Region IV
- Sub-region (a): Kentucky, North Carolina, South Carolina, Tennessee
- Sub-region (b): Alabama, Florida, Georgia, Mississippi

Region V
- Sub-region (a): Michigan, Minnesota, Wisconsin
- Sub-region (b): Illinois, Indiana, Ohio

Region VI
- Sub-region (a): Arkansas, Louisiana, Oklahoma
- Sub-region (b): New Mexico, Texas

Region VII Iowa, Kansas, Missouri, Nebraska

Region VIII Colorado, Montana, North Dakota, South Dakota, Utah, Wyoming

Region IX Arizona, California, Hawaii, Nevada, American Samoa, Commonwealth of the Marianas, Guam, Trust Territories

Region X Idaho, Oregon, Washington; and a satellite center located in Alaska, serving both Region X and American Indian Program grantees.

American Indian Programs Branch
- American Indian Head Start grantees in Alaska, Arizona, California, Colorado, Florida, Idaho, Kansas, Michigan, Minnesota, Mississippi, Montana, Nebraska, Nevada, New Mexico, New York, North Carolina, North Dakota, Oklahoma, Oregon, South Dakota, Utah, Washington, Wisconsin, Wyoming

Migrant Programs Branch
- Migrant Head Start grantees in Alabama, Arizona, Arkansas, California, Colorado, Delaware, Florida, Georgia, Idaho, Illinois, Indiana, Maryland, Michigan, Minnesota, New Jersey, New Mexico, New York, North Carolina, Ohio, Oregon, Pennsylvania, South Carolina, Tennessee, Texas, Utah, Virginia, Washington, Wisconsin

Appendix B—Guidance for the Project Design of a Head Start Quality Improvement Center

The Regional or sub-Regional Head Start Quality Improvement Centers (HSQICs) are envisioned to be coordinator/information hubs at the Regional/American Indian Programs Branch (AIPB)/Migrant Programs Branch (MPB) level, disseminating and collecting information from the ACF Regional and National Offices, the American Indian Programs and Migrant Programs Branches, and Head Start grantees, as well as the broader child care community. The HSQICs are encouraged to work with local agencies to develop interagency agreements and partnerships for the delivery of T/TA.

As partners with the Head Start Bureau and ACF Regional Offices, the recipients of these awards are encouraged to propose plans that define strategies to meet the needs of Head Start grantees and delegate agencies as well as the child development field in the areas that they will serve. The strategies should provide for some level of support for all grantees and delegate agencies. The provision of T/TA should begin with a strategic planning process that will include a needs assessment and plan development and will continue with steps for the implementation of T/TA services and for the evaluation of those services. Information may be shared among the HSQICs and with the Head Start Bureau and ACF Regional Offices.

The HSQICs will have responsibility for assuring T/TA that can be provided statewide and to clusters of grantees, as well as to individuals at the grantee level. The HSQICs may consider the development of State/cluster sites. The State/cluster sites, suggested to ACF in consultations carried out in the preparation of this program announcement, are envisioned as extensions of the HSQICs. The number of skilled staff located at the State/cluster site would be dependent upon the size and number of grantees and delegate agencies and within the geographic area covered. Current teaching centers or State/American Indian/Migrant Head Start Association offices might be considered as possible State/cluster sites.

In addition, the Regional and sub-Regional HSQICs should work with the ACF Regional Offices, the American Indian Programs and Migrant Programs Branches to implement T/TA in the following areas:

- Quality improvement:

* Core Head Start Services

+ T/TA resources needed to assure compliance with the Head Start Program Performance Standards in each content area and to implement program improvement plans and best practices.

+ Needs Assessments using information collected, analyses and syntheses from National Head Start T/TA providers, the Head Start Bureau and ACF Regional Offices, State/cluster sites and local Head Start grantees themselves.

+ Regional or sub-Regional training based on needs assessments and emerging priorities shared by many grantees.

+ Short- and long-range Regional T/TA plans developed by the Regional Coordinating Council, based on assessments, national and Regional program improvement plans, State/cluster information and national initiatives.

+ Model evaluation plans for grantees and States/clusters to obtain assessments of the quality and effectiveness of T/TA services provided on-site, in workshops, and in direct consultation and the use of the evaluation data in planning future T/TA activities.

+ Assistance to grantees in developing and implementing T/TA funded directly to Head Start grantees by Program Account #20 and other funds.

+ In collaboration with the American Indian Programs and the Migrant Programs Branches, T/TA especially directed to meet the needs of American Indian and Migrant grantees for information on relevant Regional/State issues, regulations, and available resources or services.

+ Emerging literacy and numeric development through materials and activities according to the developmental level of each child.

* Early Head Start (EHS)

+ Collaboration with the Early Head Start-National Resource Contract (EHS–NRC) to enhance and reinforce a comprehensive approach to meeting the multiple needs of pregnant women, and families with infants and toddlers.

+ Assistance in ensuring that EHS child and family development program models provide early opportunities for infants and toddlers to grow and develop in warm, nurturing and inclusive settings.

+ State and Regional networks for the exchange of models, strategies and materials on partnership approaches to the funding and delivery of high quality, comprehensive early childhood services among and across Head Start grantees, child care centers and homes, school-based early childhood programs and other providers and settings serving young children and families.

+ Assistance to EHS programs to identify and assess a wide variety of resources available in communities.

+ Assistance to EHS programs to ensure continuous learning opportunities for training, supervision and mentoring in response to the ongoing development of new knowledge across disciplines and to enable the staff to recognize and respond to the best practices, lessons learned and quality goals of EHS.

* Child Development Associate (CDA) Certification

+ Assistance to grantee and delegate agencies to locate staff training with academic credit, as feasible, to help ensure:

• renewal of CDA credentials;

• qualified staff as defined in the Head Start Program Performance Standards, including teachers of infants and toddlers and teachers of preschool age children;

+ Assistance to grantee and delegate agencies in identifying qualified and experienced experts capable of providing on-site training and mentoring to teachers of infants and toddlers, teachers of preschool age children, home visitors, and family child care providers, and their respective supervisors over substantial periods of time.

+ Assistance to grantee and delegate agencies in implementing a curriculum suitable for the ages and stages of development of the children served which is consistent with the definition in the Head Start Program Performance Standards.

+ Identification of training resources and consultants to implement CDA requirements for home-based programs.

* Quality Improvement Plans and Monitoring Follow-up

+ Assistance to grantees found to be deficient to ensure that Quality Improvement Plans (QIPs) are implemented and identified deficiencies addressed, at the grantee's request.

+ Use of information from monitoring reviews, Program Information Reports (PIR), and data provided by the ACF Regional Office, the American Indian Programs and the Migrant Programs Branches to plan T/TA for grantees.

+ Development of procedures for grantees to communicate their special needs for T/TA to their Regional or sub-Regional and cluster coordinators.

In providing T/TA in the above-outlined areas, HSQICs may use the following approaches:

• Forms of collaboration and assistance

* On-site collaboration/assistance

+ On-site T/TA in response to needs identified during the needs assessment process.

+ Special projects to meet Regional or sub-Regional service area needs.

* Workshops and conferences

+ Regional or sub-Regional training workshops and institutes for grantees on Head Start-specific topics and other topics as determined by need, including fiscal management, management training (strategic long-range planning, communication systems, organizational structure, systems theory and program self-assessment), the Head Start Financial Information System (HSFIS), Program Information Report (PIR) orientation for new directors and coordinators and orientation on the Head Start Program Performance Standards (historically, these have been held at least annually).

+ Development of topics and schedules of workshops provided at State/cluster sites.

+ Presentations/workshops for State and National Head Start Association conferences and national Head Start Bureau events.

+ Participation in meetings/events sponsored by public and private organizations offering opportunities to provide T/TA-related information to appropriate constituencies.

+ Use of current technologies/approaches, such as distance learning, interactive systems computers, videos, satellite down links, internet, etc., for maximizing the dissemination and provision of T/TA.

* Training and technical assistance institutes

+ Training provided to grantees on-site, in clusters, and/or at State- or Region-wide settings, including use of the train-the-trainer model.

+ Development and implementation of opportunities for distance learning.

+ Training on newly developed Head Start materials.

+ Development and implementation of procedures for grantee staff to engage in inquiry research and in program/curriculum development opportunities.

* Information dissemination/networking

+ Regional information dissemination on T/TA to grantees and State/cluster sites.

+ Technological networks at the Regional level using innovative communication technology, particularly to disseminate information on Head Start policies and regulations.

+ Shared information and results of evaluations of consultants through the National T/TA Information Resource Bank.

+ Demonstrations of, and information on, and dissemination of materials developed by national contractors and Regional and sub-Regional HSQICs.

+ Collaboration with Head Start-sponsored or related national initiatives, such as Medicaid, immunizations, substance abuse prevention and treatment, transportation, facilities and mental health.

+ Information and/or training about Head Start Bureau publications, such as training guides.

+ Assistance in developing Head Start Family Information System (HSFIS) reports for local use, maintaining contact with the HSFIS contractor regarding the usage of the system.

+ Working with HSFIS sites, encouraging the use of the HSFIS by Head Start programs in the Region or sub-Region through the distribution of reports and other information; assisting programs in determining hardware requirements, staffing requirements, and data entry methods; maintaining contact with the Head Start mentor programs; assisting mentor programs in arranging for cluster training involving one or more mentor groups; assisting at cluster training events; maintaining contact with the HSFIS contractor regarding the performance of the software and other aspects of ongoing usage of the system; and recommending improvements in the system.

+ Maintaining and publishing information on statewide T/TA resources including Child Care Resource and Referral programs.

+ Maintaining a video/materials resource library.

+ Contributing articles to the Head Start Bulletin.

+ Maintaining of up-to-date fact sheets on grantees and program model descriptions.

+ Maintaining a Regional or sub-Regional calendar of T/TA events.

+ Participating in semiannual national T/TA network meetings, along with quarterly meetings/conference calls with the Federal Project Officer (FPO) and the Regional HSQIC liaison.

• HSQICs should organize and structure T/TA activities to achieve maximum coordination, efficiency and effectiveness. Suggested approaches include:

* A Regional or sub-Regional Coordinating Council comprised of various stakeholders, such as ACF Regional Office staff, the Federal Project Officer from the Head Start Bureau, State Collaboration Project grantees, State Head Start Association representatives and other T/TA providers in the areas of child care, early childhood education, health, family development, community development and program planning. The Council would support the HSQIC in identifying needs for T/TA, developing a Regional or sub-Regional T/TA plan, connecting and coordinating services in and among the different levels of the system and to reach out to the community. It would meet regularly to consult with the leadership of the HSQIC in assessing needs, developing a fair balance for the provision of services among grantees, and preparing and updating Regional or sub-Regional T/TA plans.

* State-/cluster-based activities functioning as extensions of the HSQIC to provide joint training opportunities to clusters of grantees that have the same needs based on needs assessments. The use of expert trainers and consultants to provide T/TA to grantees within the cluster and to interact with American Indian, Migrant and State Head Start Associations, State agencies and community organizations to coordinate services and to track relevant State legislation and regulations. Work with ''exemplary'' grantees to help them move forward as the new system is designed. Trainers need a knowledge base and an awareness of adult continuous learning and applicability to issues in the community/program to be served. Large States may have more than one cluster site and smaller States may share clusters of grantees. The American Indian Programs Branch grantees may have up to three cluster sites and the Migrant Programs Branch grantees may have up to two cluster sites. State/cluster site staff could be co-located with other T/TA providers.

* Regular meetings, communications:

+ Use of technology, such as satellites, computers, voice links, internet, etc.

+ Use of interconnected feedback loops for the purpose of issue identification, policy interpretations, evaluation, etc.

* Collaboration with Community-Based Child Care:

+ Assistance in creating and managing partnership strategies with child care and early childhood agencies and providers to meet the needs of working families and parent preparing for employment.

+ Assistance to Head Start grantees in managing multiple sources of funding to support high quality, full-day/full-year services.

+ Assistance in adapting staffing patterns, classroom- and home-based child development services and family involvement and support.

+ Assistance to State Head Start Associations, State Collaboration Projects, state and community early childhood agencies and Head Start grantees in systematic approaches to needs, assessment, planning, funding, and staff development in early care and education services.

* Linkages with Federal-State and other partners, such as the U.S. Departments of Agriculture, Labor, Housing and Urban Development, Transportation, Education, federally recognized Tribes, and institutions of higher learning.

• Geographic Coverage

* Types of grantees in service area: Large/small, rural/urban, center-based, home-based, Early Head Start, full-day, part-day.

* Level of quality among grantees:

+ Assistance to well performing grantees in developing their own T/TA services.

+ Identification of grantees to serve as mentors to new and/or deficient and seriously deficient grantees. Assistance in the management of supplementary grant funds for the mentoring grantees and collection of evaluative information on the mentoring efforts.

+ Assistance in designing T/TA plans for deficient and seriously deficient grantees, at their request and in collaboration with the ACF Regional Office, American Indian Programs and Migrant Programs Branches to enable them to meet the Head Start Program Performance Standards.

• Management and staffing issues (including consultant banks)

+ Sufficient HSQIC staff to coordinate training, manage staff and consultant resources, provide necessary subject-specific expertise, and administer cooperative agreement fiscal resources.

* Sufficient leadership and consultant expertise to address health responsibilities, including the specialty areas (medical, dental, nutrition, mental health) at the Regional or sub-Regional and State/cluster sites.

* Family and Community Partnership/Governance:

+ Skilled leadership in establishing linkages and effective interactions with Federal and State partners, distributing resource materials and conducting regular ongoing State/cluster Policy Council training with an emphasis on the timely training of parents who are new Policy Council members, arranging for follow-up on-site and being fully knowledgeable of each State's unique approach to Welfare Reform and providing on-site consultation regarding issues or effects which may impact Head Start programs and their operations/services.

* Management and Leadership

+ Sufficient staff and consultant support for ensuring training and technical assistance opportunities in management, human resources and leadership in addressing the Head Start Program Performance Standards.

* Child Care Responsibilities

+ Skilled leadership and support on assessing needs for training and technical assistance on Head Start/Child Care partnership issues.

+ Assistance in locating and describing innovative and successful Head Start/Child Care partnerships which expand the availability of high quality full-day/full-year services.

+ Assistance in State and Regional networking strategies for exchange of strategies and problem-solving around the challenges of partnership approaches to funding and managing high quality full-day/full-year services by Head Start grantees and other community-based child care and early childhood agencies.

+ Collaboration with other Federal, State, and local child care and early childhood agencies, programs and professional organizations in training, technical assistance, professional development, and planning efforts.

* HSFIS expertise to encourage its use by Head Start programs in each service area.

+ Assisting programs in determining hardware requirements, grantee staffing requirements, data entry methods, etc.

+ Maintaining contact with the mentor programs through e-mail, conference calls, etc., in order to assist mentor programs in arranging for cluster training.

* Transportation expertise:

+ Maintaining a resource library of transportation materials, including such topics as vehicles, driver training, monitor training, child restraints, model transportation plans, State pupil transportation safety plans, etc.

+ Assisting programs in keeping abreast of various Regional or sub-Regional and national conferences sponsored by school transportation organizations and legislative activities at the State and Regional level.

+ Familiarity with the driver training requirements for each State in the Regional or sub-Regional service area; assisting programs in accessing driver training needs and acquiring training resources, including train-the-trainer programs.

+ Development of classroom materials and other guidance materials for use in educating children and parents about safe riding practices and safe pedestrian practices.

+ Assisting programs in determining the transportation option most suitable for their program, e.g., coordinated systems, other contract arrangements, fleet purchases.

* Facilities expertise:

+ Provide training for grantees and ACF staff in conducting cost analysis when applying for funding for renovation, construction or purchase of facilities.

* Child development expertise to help grantees provide quality services for pregnant women, infant/toddlers, and children to age five.

* Consultant Pool

+ A Regional or sub-Regional consultant pool, identified, screened, contracted and linked to the National T/TA Information Resource Bank.

+ Provision of orientation and ongoing training for consultants.

+ Management of on-site activities of consultants at the Regional, sub-Regional or State/cluster site.

+ Monitoring and evaluation of Regional-level T/TA and the performance of consultants through on-site observations, interviews with grantee staff, reviews of workshop evaluations, etc.

+ Maintenance of evaluation data on consultants for the use of national network.

+ Sufficient staff at State/cluster sites to broker/coordinate local resources, strengthen training and staff development, assess the needs of individual grantees and assist with the development of grantee T/TA plans.

Appendix C—OMB State Single Point of Contact Listing

Arizona
Joni Saad, Arizona State Clearinghouse, 3800 N. Central Avenue, Fourteenth Floor, Phoenix, Arizona 85012, Telephone (602) 280–1315, FAX: (602) 280–8144.

Arkansas
Mr. Tracy L. Copelend, Manager, State Clearinghouse, Office of Intergovernmental Services, Department of Finance and Administration, 1515 W. 7th St., Room 412, Little Rock, Arkansas 72203, Telephone: (501) 682–1074, FAX: (501) 682–5206.

California
Grants Coordinator, Office of Planning & Research, 1400 Tenth Street, Room 121, Sacramento, California 95814, Telehpone (916) 323–7480, FAX (916) 323–3018.

Delaware
Francine Booth, State Single Point of Contact Executive Department, Thomas Collins Building, P.O. box 1401, Dover, Delaware 19903, Telephone: (202) 739–3326, FAX (302) 739–5661.

District of Columbia
Charles Nichols, State Single Point of Contact, Office of Grants Mgmt. & Dev., 717 14th Street, N.W.—Suite 500, Washington, D.C. 20005, Telephone: (202) 727–6554, FAX (202) 727–1617.

Florida
Florida State Clearinghouse, Department of Community Affairs, 2740 Centerview Drive, Tallahassee, Florida 32399–2100, Telephone: (904) 922–5438, FAX (904) 487–2899.

Georgia
Tom L. Reid, III, Administrator, Georgia State Clearinghouse, 254 Washington Street, S.W.—Room 401J, Atlanta, Georgia 30334, Telephone: (404) 656–3855 or (404) 656–3829, FAX (404) 656–7938.

Illinois
Virginia Bova, State Single Point of Contact, Department of Commerce and Community Affairs, James R. Thompson Center, 100 West Randolph, Suite 3–400, Chicago, Illinois 60601, Telephone: (312) 814–6028, FAX (312) 814–1800.

Indiana
Amy Brewer, State Budget Agency, 212 State House, Indianapolis, Indiana

46204, Telephone: (317) 232–5619, FAX (317) 233–3323.

Iowa

Steven R. McCann, Division for Community Assistance, Iowa Department of Economic Development, 200 East Grand Avenue, Des Moines, Iowa 50309, Telephone: (515) 242–4719, FAX (515) 242–4859.

Kentucky

Ronald W. Cook, Office of the Governor, Department of Local Government, 1024 Capitol Center Drive, Frankfort, Kentucky 40601–8204, Telephone: (502) 573–2382, FAX: (502) 573–2512.

Maine

Joyce Benson, State Planning Office, State House Station #38, Augusta, Maine 04333, Telephone: (207) 287–3261, FAX: (207) 287–6489.

Maryland

William G. Carroll, Manager, State Clearinghouse for Intergovernmental Assistance, Maryland Office of Planning, 301 W. Preston Street—Room 1104, Baltimore, Maryland 21201–2365, Staff Contact: Linda Janey, Telephone: (410) 225–4490, FAX: (410) 225–4480.

Michigan

Richard Pfaff, Southeast Michigan Council of Governments, 1900 Edison Plaza, 660 Plaza Drive, Detroit, Michigan 48226, Telephone: (313) 961–4266, FAX: (313) 961–4869.

Mississippi

Cathy Malette, Clearinghouse Officer, Department of Finance and Administration, 455 North Lamar Street, Jackson, Mississippi 39202–3087, Telephone: (601) 359–6762, FAX: (601) 359–6764.

Missouri

Lois Pohl, Federal Assistance Clearinghouse, Office of Administration, P.O. Box 809, Room 760, Truman Building, Jefferson City, Missouri 65102, Telephone: (314) 751–4834, FAX: (314) 751–7819.

Nevada

Department of Administration, State Clearinghouse, Capitol Complex, Carson City, Nevada 89710, Telephone: (702) 687–4065, FAX: (702) 687–3983.

New Hampshire

Jeffrey H. Taylor, Director, New Hampshire Office of State Planning, Attn: Intergovernmental Review Process, Mike Blake, 2½ Beacon Street, Concord, New Hampshire 03301, Telephone: (603) 271–2155, FAX: (603) 271–1728.

New Mexico

Robert Peters, State Budget Division, Room 190 Bataan Memorial Building, Santa Fe, New Mexico 87503, Telephone: (505) 827–3640.

New York

New York State Clearinghouse, Division of the Budget, State Capitol, Albany, New York 12224, Telephone: (518) 474–1605.

North Carolina

Chrys Baggett, Director, N.C. State Clearinghouse, Office of the Secretary of Admin., 116 West Jones Street, Raleigh, North Carolina 27603–8003, Telephone: (919) 733–7232, FAX: (919) 733–9571.

North Dakota

North Dakota Single Point of Contact, Office of Intergovernmental Assistance, 600 East Boulevard Avenue, Bismarck, North Dakota 58505–0170, Telephone: (701) 224–2094, FAX: (701) 224–2308.

Ohio

Larry Weaver, State Single Point of Contact, State Clearinghouse, Office of Budget and Management, 30 East Broad Street, 34th Floor, Columbus, Ohio 43266–0411.

Please direct correspondence and questions about intergovernmental review to: Linda Wise, Telephone: (614) 466–0698, FAX: (614) 466–5400.

Rhode Island

Daniel W. Varin, Associate Director, Department of Administration/Division of Planning, One Capitol Hill, 4th Floor, Providence, Rhode Island 02908–5870, Telephone: (401) 277–2656, FAX: (401) 277–2083.

Please direct correspondence and questions to: Review Coordinator, Office of Strategic Planning.

South Carolina

Omeagia Burgess, State Single Point of Contact, Grant Services, Office of the Governor, 1205 Pendleton Street—Room 477, Columbia, South Carolina 29201, Telephone: (803) 734–0494, FAX: (803) 734–0385.

Texas

Tom Adams, Governors Office, Director, Intergovernmental Coordination, P.O. Box 12428, Austin, Texas 78711, Telephone: (512) 463–1771, FAX: (512) 463–1888.

Utah

Carolyn Wright, Utah State Clearinghouse, Office of Planning and Budget, Room 116, State Capitol, Salt Lake City, Utah 84114, Telephone: (801) 538–1535, FAX: (801) 538–1547.

West Virginia

Fred Cutlip, Director, Community Development Division, W. Virginia Development Office, Building #6, Room 553, Charleston, West Virginia 25305, Telephone: (304) 558–4010, FAX: (304) 558–3248.

Wisconsin

Martha Kerner, Section Chief, State/Federal Regulations, Wisconsin Department of Administration, 101 East Wilson Street—6th Floor, P.O. Box 7868, Madison, Wisconsin 53707, Telephone: (608) 266–2125, FAX: (608) 267–6931.

Wyoming

Sheryl Jeffries, State Single Point of Contact, Office of the Governor, State Capital, Room 124, Cheyenne, Wyoming 82002, Telephone: (307) 777–5930, FAX: (307) 632–3909.

Territories

Guam

Mr. Giovanni T. Sgambelluri, Director, Bureau of Budget and Management Research, Office of the Governor, P.O. Box 2950, Agana, Guam 96910, Telephone: 011–671–472–2285, FAX: 011–671–472–2825.

Puerto Rico

Norma Burgos/Jose E. Caro, Chairwoman/Director, Puerto Rico Planning Board, Federal Proposals Review Office, Minillas Government Center, P.O. 41119, San Juan, Puerto Rico 00940–1119, Telephone: (809) 727–4444, (809) 723–6190, FAX: (809) 724–3270, (809) 724–3103.

North Mariana Islands

Mr. Alvaro A. Santos, Executive Officer, State Single Point of Contract, Office of Management and Budget, Office of the Governor, Saipan, MP, Telephone: (670) 664–2256, FAX: (670) 664–2272.

Contact Person: Ms. Jacoba T. Seman, Federal Programs Coordinator, Telephone: (670) 644–2289, FAX: (670) 644–2272.

Virgin Islands

Jose George, Director, Office of Management and Budget, #41 Norregade Emancipation Garden Station, Second Floor, Saint Thomas, Virgin Islands 00802.

Please direct all questions and correspondence about intergovernmental review to: Linda Clarke, Telephone: (809) 774–0750, FAX: (809) 776–0069.

BILLING CODE 4184–01–P

Appendix D

OMB Approval No. 0348-0043

APPLICATION FOR FEDERAL ASSISTANCE

1. TYPE OF SUBMISSION: *Application* ☐ Construction ☐ Non-Construction; *Preapplication* ☐ Construction ☐ Non-Construction	2. DATE SUBMITTED	Applicant Identifier
	3. DATE RECEIVED BY STATE	State Application Identifier
	4. DATE RECEIVED BY FEDERAL AGENCY	Federal Identifier

5. APPLICANT INFORMATION

Legal Name:	Organizational Unit:
Address *(give city, county, state, and zip code)*:	Name and telephone number of the person to be contacted on matters involving this application *(give area code)*

6. EMPLOYER IDENTIFICATION NUMBER (EIN):

☐☐ — ☐☐☐☐☐☐☐

7. TYPE OF APPLICANT: *(enter appropriate letter in box)* ☐

A. State
B. County
C. Municipal
D. Township
E. Interstate
F. Intermunicipal
G. Special District
H. Independent School Dist.
I. State Controlled Institution of Higher Learning
J. Private University
K. Indian Tribe
L. Individual
M. Profit Organization
N. Other (Specify) _____

8. TYPE OF APPLICATION:

☐ New ☐ Continuation ☐ Revision

If Revision, enter appropriate letter(s) in box(es): ☐ ☐

A. Increase Award B. Decrease Award C. Increase Duration
D. Decrease Duration Other *(specify)*:

_____

9. NAME OF FEDERAL AGENCY:

10. CATALOG OF FEDERAL DOMESTIC ASSISTANCE NUMBER: ☐☐ . ☐☐☐

TITLE:

11. DESCRIPTIVE TITLE OF APPLICANT'S PROJECT:

12. AREAS AFFECTED BY PROJECT *(cities, counties, states, etc.)*:

13. PROPOSED PROJECT:		14. CONGRESSIONAL DISTRICTS OF:	
Start Date	Ending Date	a. Applicant	b. Project

15. ESTIMATED FUNDING:		
a. Federal	$	.00
b. Applicant	$	.00
c. State	$	.00
d. Local	$	.00
e. Other	$	.00
f. Program Income	$	.00
g. TOTAL	$	.00

16. IS APPLICATION SUBJECT TO REVIEW BY STATE EXECUTIVE ORDER 12372 PROCESS?

a. YES. THIS PREAPPLICATION/APPLICATION WAS MADE AVAILABLE TO THE STATE EXECUTIVE ORDER 12372 PROCESS FOR REVIEW ON:

DATE_____

b. NO. ☐ PROGRAM IS NOT COVERED BY E.O. 12372

☐ OR PROGRAM HAS NOT BEEN SELECTED BY STATE FOR REVIEW

17. IS THE APPLICANT DELINQUENT ON ANY FEDERAL DEBT?

☐ Yes If "Yes," attach an explanation. ☐ No

18. TO THE BEST OF MY KNOWLEDGE AND BELIEF, ALL DATA IN THIS APPLICATION/PREAPPLICATION ARE TRUE AND CORRECT, THE DOCUMENT HAS BEEN DULY AUTHORIZED BY THE GOVERNING BODY OF THE APPLICANT AND THE APPLICANT WILL COMPLY WITH THE ATTACHED ASSURANCES IF THE ASSISTANCE IS AWARDED

a. Typed Name of Authorized Representative	b. Title	c. Telephone number
d. Signature of Authorized Representative		e. Date Signed

Previous Editions Not Usable

Standard Form 424 (REV 4-88)
Prescribed by OMB Circular A-102

Authorized for Local Reproduction

BILLING CODE 4184–01–C

Instructions for the SF 424

This is a standard form used by applicants as a required facesheet for preapplications and applications submitted for Federal assistance. It will be used by Federal agencies to obtain applicant certification that States which have established a review and comment procedure in response to Executive Order 12372 and have selected the program to be included in their process, have been given an opportunity to review the applicant's submission.

Item and Entry

1. Self-explanatory.
2. Date application submitted to Federal agency (or State if applicable) & applicant's control number (if applicable).
3. State use only (if applicable).
4. If this application is to continue or revise an existing award, enter present Federal identifier number. If for a new project, leave blank.
5. Legal name of applicant, name of primary organizational unit which will undertake the assistance activity, complete address of the applicant, and name and telephone number of the person to contact on matters related to this application.
6. Enter Employer Identification Number (EIN) as assigned by the Internal Revenue Service.
7. Enter the appropriate letter in the space provided.
8. Check appropriate box and enter appropriate letter(s) in the space(s) provided:
—''New'' means a new assistance award.
—''Continuation'' means an extension for an additional funding/budget period for a project with a projected completion date.
—''Revision'' means any change in the Federal Government's financial obligation or contingent liability from an existing obligation.
9. Name of Federal agency from which assistance is being requested with this application.
10. Use the Catalog of Federal Domestic Assistance number and title of the program under which assistance is requested.
11. Enter a brief descriptive title of the project. If more than one program is involved, you should append an explanation on a separate sheet. If appropriate (e.g., construction or real property projects), attach a map showing project location. For preapplications, use a separate sheet to provide a summary description of this project.
12. List only the largest political entities affected (e.g., State, counties, cities).
13. Self-explanatory.
14. List the applicant's Congressional District and any District(s) affected by the program or project.
15. Amount requested or to be contributed during the first funding/budget period by each contributor. Value of in-kind contributions should be included on appropriate lines as applicable. If the action will result in a dollar change to an existing award, indicate *only* the amount of the change. For decreases, enclosed the amounts in parentheses. If both basic and supplemental amounts are included, show breakdown on an attached sheet. For multiple program funding, use totals and show breakdown using same categories as item 15.
16. Applicants should contact the State Single Point of Contract (SPOC) for Federal Executive Order 12372 to determine whetter the application is subject to the State intergovernmental review process.
17. This question applies to the applicant organization, not the person who signs as the authorized representative. Categories of debt include delinquent audit disallowances, loans and taxes.
18. To be signed by the authorized representative of the applicant. A copy of the governing body's authorization for you to sign this application as official representative must be on file in the applicant's office. (Certain Federal agencies may require that this authorization be submitted as part of the application.)

BILLING CODE 4184–01–P

OMB Approval No. 0348-0044

BUDGET INFORMATION — Non-Construction Programs

SECTION A – BUDGET SUMMARY

Grant Program Function or Activity (a)	Catalog of Federal Domestic Assistance Number (b)	Estimated Unobligated Funds		New or Revised Budget		
		Federal (c)	Non-Federal (d)	Federal (e)	Non-Federal (f)	Total (g)
1.		$	$	$	$	$
2.						
3.						
4.						
5. TOTALS		$	$	$	$	$

SECTION B – BUDGET CATEGORIES

6 Object Class Categories	GRANT PROGRAM, FUNCTION OR ACTIVITY				Total (5)
	(1)	(2)	(3)	(4)	
a. Personnel	$	$	$	$	$
b. Fringe Benefits					
c. Travel					
d. Equipment					
e. Supplies					
f. Contractual					
g. Construction					
h. Other					
i. Total Direct Charges (sum of 6a - 6h)					
j. Indirect Charges					
k. TOTALS (sum of 6i and 6j)	$	$	$	$	$
7. Program Income	$	$	$	$	$

Authorized for Local Reproduction

Standard Form 424A (4-88)
Prescribed by OMB Circular A-102

SECTION C - NON-FEDERAL RESOURCES

(a) Grant Program	(b) Applicant	(c) State	(d) Other Sources	(e) TOTALS
8.	$	$	$	$
9.				
10.				
11.				
12. TOTALS (sum of lines 8 and 11)	$	$	$	$

SECTION D - FORECASTED CASH NEEDS

	Total for 1st Year	1st Quarter	2nd Quarter	3rd Quarter	4th Quarter
13. Federal	$	$	$	$	$
14. NonFederal					
15. TOTAL (sum of lines 13 and 14)	$	$	$	$	$

SECTION E - BUDGET ESTIMATES OF FEDERAL FUNDS NEEDED FOR BALANCE OF THE PROJECT

(a) Grant Program	FUTURE FUNDING PERIODS (Years)			
	(b) First	(c) Second	(d) Third	(e) Fourth
16.	$	$	$	$
17.				
18.				
19.				
20. TOTALS (sum of lines 16 -19)	$	$	$	$

SECTION F - OTHER BUDGET INFORMATION

(Attach additional Sheets if Necessary)

21. Direct Charges:	22. Indirect Charges:

23. Remarks

SF 424A (4-88) Page 2
Prescribed by OMB Circular A-102

Authorized for Local Reproduction

BILLING CODE 4184-01-C

Instructions for the SF–424A

General Instructions

This form is designed so that application can be made for funds from one or more grant programs. In preparing the budget, adhere to any existing Federal grantor agency guidelines which prescribe how and whether budgeted amounts should be separately shown for different functions or activities within the program. For some programs, grantor agencies may require budgets to be separately shown by function or activity. For other programs, grantor agencies may require a breakdown by function or activity. Sections A, B, C, and D should include budget estimates for the whole project except when applying for assistance which requires Federal authorization in annual or other funding period increments. In the latter case, Sections A, B, C, and D should provide the budget for the first budget period (usually a year) and Section E should present the need for Federal assistance in the subsequent budget periods. All applications should contain a breakdown by the object class categories shown in Lines a–k of Section B.

Section A. Budget Summary Lines 1–4, Columns (a) and (b)

For applications pertaining to a *single* Federal grant program (Federal Domestic Assistance Catalog number) and *not requiring* a functional or activity breakdown, enter on Line 1 under Column (a) the catalog program title and the catalog number in Column (b).

For applications pertaining to a *single* program *requiring* budget amounts by multiple functions or activities, enter the name of each activity or function on each line in Column (a), and enter the catalog number in Column (b). For applications pertaining to multiple programs where none of the programs require a breakdown by function or activity, enter the catalog program title on each line in *Column* (a) and the respective catalog number on each line in Column (b).

For applications pertaining to *multiple* programs where one or more programs *require* a breakdown by function or activity, prepare a separate sheet for each program requiring the breakdown. Additional sheets should be used when one form does not provide adequate space for all breakdown of data required. However, when more than one sheet is used, the first page should provide the summary totals by programs.

Lines 1–4, Columns (c) through (g.)

For new applications, leave Columns (c) and (d) blank. For each line entry in Columns (a) and (b), enter in Columns (e), (f), and (g) the appropriate amounts of funds needed to support the project for the first funding period (usually a year).

For continuing grant program applications, submit these forms before the end of each funding period as required by the grantor agency. Enter in Columns (c) and (d) the estimated amounts of funds which will remain unobligated at the end of the grant funding period only if the Federal grantor agency instructions provide for this. Otherwise, leave these columns blank. Enter in columns (e) and (f) the amounts of funds needed for the upcoming period. The amount(s) in Column (g) should be the sum of amounts in Columns (e) and (f).

For supplemental grants and changes to existing grants, do not use Columns (c) and (d). Enter in Column (e) the amount of the increase or decrease of Federal funds and enter in Column (f) the amount of the increase or decrease of non-Federal funds. In Column (g) enter the new total budgeted amount (Federal and non-Federal) which includes the total previous authorized budgeted amounts plus or minus, as appropriate, the amounts shown in Columns (e) and (f). The amount(s) in Column (g) should not equal the sum of amounts in Columns (e) and (f).

Line 5—Show the totals for all columns used.

Section B Budget Categories

In the column headings (1) through (4), enter the titles of the same programs, functions, and activities shown on Lines 1–4, Column (a), Section A. When additional sheets are prepared for Section A, provide similar column headings on each sheet. For each program, function or activity, fill in the total requirements for funds (both Federal and non-Federal) by object class categories.

Lines 6a–i—Show the totals of Lines 6a to 6h in each column.

Line 6j—Show the amount of indirect cost.

Line 6K—Enter the total of amounts on Lines 6i and 6j. For all applications for new grants and continuation grants the total amount in column (5), Line 6k, should be the same as the total amount shown in Section A, Column (g), Line 5. For supplemental grants and changes to grants, the total amount of the increase or decrease as shown in Columns (1)–(4), Line 6k should be the same as the sum of the amounts in Section A, Columns (e) and (f) on Line 5.

Line 7—Enter the estimated amount of income, if any, expected to be generated from this project. Do no add or subtract this amount from the total project amount. Show under the program narrative statement the nature and source of income. The estimated amount of program income may be considered by the federal grantor agency in determining the total amount of the grant.

Section C. Non-Federal-Resources

Lines 8–11—Enter amounts of non-Federal resources that will be used on the grant. If in-kind contributions are included, provide a brief explanation on a separate sheet.

Column (a)—Enter the program titles identical to Column (a), Section A. A breakdown by function or activity is not necessary.

Column (b)—Enter the contribution to be made by the applicant.

Column (c)—Enter the amount of the State's cash and in-kind contribution if the applicant is not a State or State agency. Applicants which are a State or State agencies should leave this column blank.

Column (d)—Enter the amount of cash and in-kind contributions to be made from all other sources.

Column (e)—Enter totals of Columns (b), (c), and (d).

Line 12—Enter the total for each of Column (b)–(e). The amount in Column (e) should be equal to the amount of Line 5, Column (f), Section A.

Section D. Forecasted Cash Needs

Line 13—Enter the amount of cash needed by quarter from the grantor agency during the first year.

Line 14—Enter the amount of cash from all other sources needed by quarter during the first year.

Line 15—Enter the totals of amounts on Lines 13 and 14.

Section E. Budget Estimates of Federal Funds Needed for Balance of the Project

Lines 16–19—Enter in Column (a) the same grant program titles shown in Column (a), Section A. A breakdown by function or activity is not necessary. For new applications and continuation grant applications, enter in the proper columns amounts of Federal funds which will be needed to complete the program or project over the succeeding funding periods (usually in years). This section need not be completed for revisions (amendments, changes, or supplements) to funds for the current year of existing grants.

If more than four lines are needed to list the program titles, submit additional schedules as necessary.

Line 20—Enter the total for each of the Columns (b)–(e). When additional schedules are prepared for this Section, annotate accordingly and show the overall totals on this line.

Section F. Other Budget Information

Line 21—Use this space to explain amounts for individual direct object-class cost categories that may appear to be out of the ordinary or to explain the details as required by the Federal grantor agency.

Line 22—Enter the type of indirect rate (provisional, predetermined, final or fixed) that will be in effect during the funding period, the estimated amount of the base to which the rate is applied, and the total indirect expense.

Line 23—Provide any other explanations or comments deemed necessary.

BILLING CODE 4184–01–P

OMB Approval No. 0348-0040

ASSURANCES — NON-CONSTRUCTION PROGRAMS

Note: Certain of these assurances may not be applicable to your project or program. If you have questions, please contact the awarding agency. Further, certain Federal awarding agencies may require applicants to certify to additional assurances. If such is the case, you will be notified.

As the duly authorized representative of the applicant I certify that the applicant:

1. Has the legal authority to apply for Federal assistance, and the institutional, managerial and financial capability (including funds sufficient to pay the non-Federal share of project costs) to ensure proper planning, management and completion of the project described in this application.

2. Will give the awarding agency, the Comptroller General of the United States, and if appropriate, the State, through any authorized representative, access to and the right to examine all records, books, papers, or documents related to the award; and will establish a proper accounting system in accordance with generally accepted accounting standards or agency directives.

3. Will establish safeguards to prohibit employees from using their positions for a purpose that constitutes or presents the appearance of personal or organizational conflict of interest, or personal gain.

4. Will initiate and complete the work within the applicable time frame after receipt of approval of the awarding agency.

5. Will comply with the Intergovernmental Personnel Act of 1970 (42 U.S.C. §§ 4728-4763) relating to prescribed standards for merit systems for programs funded under one of the nineteen statutes or regulations specified in Appendix A of OPM's Standards for a Merit System of Personnel Administration (5 C.F.R. 900, Subpart F).

6. Will comply with all Federal statutes relating to nondiscrimination. These include but are not limited to: (a) Title VI of the Civil Rights Act of 1964 (P.L. 88-352) which prohibits discrimination on the basis of race, color or national origin; (b) Title IX of the Education Amendments of 1972, as amended (20 U.S.C. §§ 1681-1683, and 1685-1686), which prohibits discrimination on the basis of sex; (c) Section 504 of the Rehabilitation Act of 1973, as amended (29 U.S.C. § 794), which prohibits discrimination on the basis of handicaps; (d) the Age Discrimination Act of 1975, as amended (42 U.S.C.§§ 6101-6107), which prohibits discrimination on the basis of age; (e) the Drug Abuse Office and Treatment Act of 1972 (P.L. 92-255), as amended, relating to nondiscrimination on the basis of drug abuse; (f) the Comprehensive Alcohol Abuse and Alcoholism Prevention, Treatment and Rehabilitation Act of 1970 (P.L. 91-616), as amended, relating to nondiscrimination on the basis of alcohol abuse or alcoholism; (g) §§ 523 and 527 of the Public Health Service Act of 1912 (42 U.S.C. 290 dd-3 and 290 ee-3), as amended, relating to confidentiality of alcohol and drug abuse patient records; (h) Title VIII of the Civil Rights Act of 1968 (42 U.S.C. § 3601 et seq.), as amended, relating to nondiscrimination in the sale, rental or financing of housing; (i) any other nondiscrimination provisions in the specific statute(s) under which application for Federal assistance is being made; and (j) the requirements of any other nondiscrimination statute(s) which may apply to the application.

7. Will comply, or has already complied, with the requirements of Titles II and III of the Uniform Relocation Assistance and Real Property Acquisition Policies Act of 1970 (P.L. 91-646) which provide for fair and equitable treatment of persons displaced or whose property is acquired as a result of Federal or federally assisted programs. These requirements apply to all interests in real property acquired for project purposes regardless of Federal participation in purchases.

8. Will comply with the provisions of the Hatch Act (5 U.S.C. §§ 1501-1508 and 7324-7328) which limit the political activities of employees whose principal employment activities are funded in whole or in part with Federal funds.

9. Will comply, as applicable, with the provisions of the Davis-Bacon Act (40 U.S.C. §§ 276a to 276a-7), the Copeland Act (40 U.S.C. § 276c and 18 U.S.C. §§ 874), and the Contract Work Hours and Safety Standards Act (40 U.S.C. §§ 327-333), regarding labor standards for federally assisted construction subagreements.

Standard Form 424B (4-88)
Prescribed by OMB Circular A-102

Authorized for Local Reproduction

10. Will comply, if applicable, with flood insurance purchase requirements of Section 102(a) of the Flood Disaster Protection Act of 1973 (P.L. 93-234) which requires recipients in a special flood hazard area to participate in the program andto purchase flood insurance if the total cost of insurable construction and acquisition is $10,000 or more.

11. Will comply with environmental standards which may be prescribed pursuant to the following: (a) institution of environmental quality control measures under the National Environmental Policy Act of 1969 (P.L. 91-190) and Executive Order (EO) 11514; (b) notification of violating facilities pursuant to EO 11738; (c) protection of wetlands pursuant to EO 11990; (d) evaluation of flood hazards in floodplains in accordance with EO 11988; (e) assurance of project consistency with the approved State management program developed under the Coastal Zone Management Act of 1972 (16 U.S.C. §§ 1451 et seq.); (f) conformity of Federal actions to State (Clear Air) Implementation Plans under Section 176(c) of the Clear Air Act of 1955, as amended (42 U.S.C. § 7401 et seq.); (g) protection of underground sources of drinking water under the Safe Drinking Water Act of 1974, as amended, (P.L. 93-523); and (h) protection of endangered species under the Endangered Species Act of 1973, as amended, (P.L. 93-205).

12. Will comply with the Wild and Scenic Rivers Act of 1968 (16 U.S.C. §§ 1271 et seq.) related to protecting components or potential components of the national wild and scenic rivers system.

13. Will assist the awarding agency in assuring compliance with Section 106 of the National Historic Preservation Act of 1966, as amended (16 U.S.C. 470), EO 11593 (identification and protection of historic properties), and the Archaeological and Historic Preservation Act of 1974 (16 U.S.C. 469a-1 et seq.).

14. Will comply with P.L. 93-348 regarding the protection of human subjects involved in research, development, and related activities supported by this award of assistance.

15. Will comply with the Laboratory Animal Welfare Act of 1966 (P.L. 89-544, as amended, 7 U.S.C. 2131 et seq.) pertaining to the care, handling, and treatment of warm blooded animals held for research, teaching, or other activities supported by this award of assistance.

16. Will comply with the Lead-Based Paint Poisoning Prevention Act (42 U.S.C. §§ 4801 et seq.) which prohibits the use of lead based paint in construction or rehabilitation of residence structures.

17. Will cause to be performed the required financial and compliance audits in accordance with the Single Audit Act of 1984.

18. Will comply with all applicable requirements of all other Federal laws, executive orders, regulations and policies governing this program.

SIGNATURE OF AUTHORIZED CERTIFYING OFFICIAL	TITLE
APPLICANT ORGANIZATION	DATE SUBMITTED

SF 424B (4-88) Back

U.S. Department of Health and Human Services

Certification Regarding Drug-Free Workplace Requirements

Grantees Other Than Individuals

By signing and/or submitting this application or grant agreement, the grantee is providing the certification set out below.

This certification is required by regulations implementing the Drug-Free Workplace Act of 1988, 45 CFR Part 76, Subpart F. The regulations, published in the May 25, 1990 **Federal Register**, require certification by grantees that they will maintain a drug-free workplace. The certification set out below is a material representation of fact upon which reliance will be placed when the Department of Health and Human Services (HHS) determines to award the grant. If it is later determined that the grantee knowingly rendered a false certification, or otherwise violates the requirements of the Drug-Free Workplace Act, HHS, in addition to any other remedies available to the Federal Government, may taken action authorized under the Drug-Free Workplace Act. False certification or violation of the certification shall be grounds for suspension of payments, suspension or termination of grants, or governmentwide suspension or debarment.

Workplaces under grants, for grantees other than individuals, need not be identified on the certification. If known, they may be identified in the grant application. If the grantee does not identify the workplaces at the time of application, or upon award, if there is no application, the grantee must keep the identity of the workplace(s) on file in its office and make the information available for Federal inspection. Failure to identify all known workplaces constitutes a violation of the grantee's drug-free workplace requirements.

Workplace identifications must include the actual address of buildings (or parts of buildings) or other sites where work under the grant takes place. Categorical descriptions may be used (e.g., all vehicles of a mass transit authority or State highway department while in operation, State employees in each local unemployment office, performers in concert halls or radio studios.)

If the workplace identified to HHS changes during the performance of the grant, the grantee shall inform the agency of the change(s), if it previously identified the workplaces in question (see above).

Definitions of terms in the Nonprocurement Suspension and Debarment common rule and Drug-Free Workplace common rule apply to this certification. Grantees' attention is called, in particular, to the following definitions from these rules:

"Controlled substance" means a controlled substance in Schedules I through V of the Controlled Substances Act (21 USC 812) and as further defined by regulation (21 CFR 1308.11 through 1308.15).

"Conviction" means a finding of guilt (including a plea of nolo contendere) or imposition of sentence, or both, by any judicial body charged with the responsibility to determine violations of the Federal or State criminal drug statutes;

"Criminal drug statute" means a Federal or non-Federal criminal statute involving the manufacture, distribution, dispensing, use, or possession of any controlled substance;

"Employee" means the employee of a grantee directly engaged in the performance of work under a grant, including: (i) All "direct charge" employees; (ii) all "indirect charge" employees unless their impact or involvement is insignificant to the performance of the grant; and, (iii) temporary personnel and consultants who are directly engaged in the performance of work under the grant and who are on the grantee's payroll. This definition does not include workers not on the payroll of the grantee (e.g., volunteers, even if used to meet a matching requirement; consultants or independent contractors not on the grantee's payroll; or employees of subrecipients or subcontractors in covered workplaces).

The grantee certifies that it will or will continue to provide a drug-free workplace by:

(a) Publishing a statement notifying employees that the unlawful manufacture, distribution, dispensing, possession or use of a controlled substance is prohibited in the grantee's workplace and specifying the actions that will be taken against employees for violation of such prohibition;

(b) Establishing an ongoing drug-free awareness program to inform employees about:

(1) The dangers of drug abuse in the workplace; (2) The grantee's policy of maintaining a drug-free workplace; (3) Any available drug counseling, rehabilitation, and employee assistance programs; and, (4) The penalties that may be imposed upon employees for drug abuse violations occurring in the workplace;

(c) Making it a requirement that each employee to be engaged in the performance of the grant be given a copy of the statement required by paragraph (a);

(d) Notifying the employee in the statement required by paragraph (a) that, as a condition of employment under the grant, the employee will:

(1) Abide by the terms of the statement; and, (2) Notify the employer in writing of his or her conviction for a violation of a criminal drug statute occurring in the workplace no later than five calendar days after such conviction;

(e) Notifying the agency in writing, within ten calendar days after receiving notice under subparagraph (d)(2) from an employee or otherwise receiving actual notice of such conviction. Employers of convicted employees must provide notice, including position title, to every grant officer or other designee on whose grant activity the convicted employee was working, unless the Federal agency has designated a central point for the receipt of such notices. Notice shall include the identification number(s) of each affected grant;

(f) Taking one of the following actions, within 30 calendar days of receiving notice under subparagraph (d)(2), with respect to any employee who is so convicted:

(1) Taking appropriate personnel action against such an employee, up to and including termination, consistent with the requirements of the Rehabilitation Act of 1973, as amended; or, (2) Requiring such employee to participate satisfactorily in a drug abuse assistance or rehabilitation program approved for such purposes by a Federal, State, or local health, law enforcement, or other appropriate agency;

(g) Making a good faith effort to continue to maintain a drug-free workplace through implementation of paragraphs (a), (b), (c), (d), (e) and (f).

The grantee may insert in the space provided below the site(s) for the performance of work done in connection with the specific grant (use attachments, if needed):

Place of Performance (Street address, City, County, State, ZIP Code) _____

_____

Check ___ if there are workplaces on file that are not identified here.

Sections 76.630(c) and (d)(2) and 76.635(a)(1) and (b) provide that a Federal agency may designate a central receipt point for STATE-WIDE AND STATE AGENCY-WIDE certifications, and for notification of criminal drug convictions. For the Department of Health and Human Services, the central receipt point is: Division of Grants Management and Oversight, Office of Management and Acquisition, Department of Health and Human Services, Room 517-D, 200 Independence Avenue, S.W., Washington, D.C. 20201.

DGMO Form#2 Revised May 1990

BILLING CODE 4184–01–C

Certification Regarding Debarment, Suspension, Ineligibility and Voluntary Exclusion—Lower Tier Covered Transactions

Instructions for Certification

1. By signing and submitting this proposal, the prospective lower tier participant is providing the certification set out below.

2. The certification in this clause is a material representation of fact upon which reliance was placed when this transaction was entered into. If it is later determined that the prospective lower tier participant knowingly rendered an erroneous certification, in addition to other remedies available to the Federal Government the department or agency with which this transaction originated may pursue available remedies, including suspension and/or debarment.

3. The prospective lower tier participant shall provide immediate written notice to the person to which this proposal is submitted if at any time the prospective lower tier participant learns that its certification was erroneous when submitted or had become erroneous by reason of changed circumstances.

4. The terms covered transaction, debarred, suspended, ineligible, lower tier covered transaction, participant, person, primary covered transaction, principal, proposal, and voluntarily excluded, as used in this clause, have the meaning set out in the Definitions and Coverage sections of rules implementing Executive Order 12549. You may contact the person to which this proposal is submitted for assistance in obtaining a copy of those regulations.

5. The prospective lower tier participant agrees by submitting this proposal that, [[Page 33043]] should the proposed covered transaction be entered into, it shall not knowingly enter into any lower tier covered transaction with a person who is proposed for debarment under 48 CFR part 9, subpart 9.4, debarred, suspended, declared ineligible, or voluntarily excluded from participation in this covered transaction, unless authorized by the department or agency with which this transaction originated.

6. The prospective lower tier participant further agrees by submitting this proposal that it will include this clause titled ''Certification Regarding Debarment, Suspension, Ineligibility and Voluntary Exclusion-Lower Tier Covered Transaction,'' without modification, in all lower tier covered transactions and in all solicitations for lower tier covered transactions.

7. A participant in a covered transaction may rely upon a certification of a prospective participant in a lower tier covered transaction that it is not proposed for debarment under 48 CFR part 9, subpart 9.4, debarred, suspended, ineligible, or voluntarily excluded from covered transactions, unless it knows that the certification is erroneous. A participant may decide the method and frequency by which it determines the eligibility of its principals. Each participant may, but is not required to, check the List of Parties Excluded from Federal Procurement and Nonprocurement Programs.

8. Nothing contained in the foregoing shall be construed to require establishment of a system of records in order to render in good faith the certification required by this clause. The knowledge and information of a participant is not required to exceed that which is normally possessed by a prudent person in the ordinary course of business dealings.

9. Except for transactions authorized under paragraph 5 of these instructions, if a participant in a covered transaction knowingly enters into a lower tier covered transaction with a person who is proposed for debarment under 48 CFR part 9, subpart 9.4, suspended, debarred, ineligible, or voluntarily excluded from participation in this transaction, in addition to other remedies available to the Federal Government, the department or agency with which this transaction originated may pursue available remedies, including suspension and/or debarment.

Certification Regarding Debarment, Suspension, Ineligibility and Voluntary Exclusion—Lower Tier Covered Transactions

(1) The prospective lower tier participant certifies, by submission of this proposal, that neither it nor its principals is presently debarred, suspended proposed for debarment, declared ineligible, or voluntarily excluded from participation in this transaction by any Federal department or agency.

(2) Where the prospective lower tier participant is unable to certify to any of the statements in this certification, such prospective participant shall attach an explanation to this proposal.

Certification Regarding Debarment, Suspension, and Other Responsibility Matters—Primary Covered Transactions

Instructions for Certification

1. By signing and submitting this proposal, the prospective primary participant is providing the certification set out below.

2. The inability of a person to provide the certification required below will not necessarily result in denial of participation in this covered transaction. The prospective participant shall submit an explanation of why it cannot provide the certification set out below. The certification or explanation will be considered in connection with the department or agency's determination whether to enter into this transaction. However, failure of the prospective primary participant to furnish a certification or an explanation shall disqualify such person from participation in this transaction.

3. The certification in this clause is a material representation of fact upon which reliance was placed when the department or agency determined to enter into this transaction. If it is later determined that the prospective primary participant knowingly rendered an erroneous certification, in addition to other remedies available to the Federal Government, the department or agency may terminate this transaction for cause or default.

4. The prospective primary participant shall provide immediate written notice to the department or agency to which this proposal is submitted if at any time the prospective primary participant learns that its certification was erroneous when submitted or has become erroneous by reason of changed circumstances.

5. The terms covered transaction, debarred, suspended, ineligible, lower tier covered transaction, participant, person, primary covered transaction, principal, proposal, and voluntarily excluded, as used in this clause, have the meanings set out in the Definitions and Coverage sections of the rules implementing Executive Order 12549. You may contact the department or agency to which this proposal is being submitted for assistance in obtaining a copy of those regulations.

6. The prospective primary participant agrees by submitting this proposal that, should the proposed covered transaction be entered into, it shall not knowingly enter into any lower tier covered transaction with a person who is proposed for debarment under 48 CFR part 9, subpart 9.4, debarred, suspended, declared ineligible, or voluntarily excluded from participation in this covered transaction, unless authorized by the department or agency entering into this transaction.

7. The prospective primary participant further agrees by submitting this proposal that it will include the clause titled ''Certification Regarding Debarment, Suspension, Ineligibility and Voluntary Exclusion-Lower Tier Covered Transaction,'' provided by the department or agency entering into this covered transaction, without modification, in all lower tier covered transactions and in all solicitations for lower tier covered transactions.

8. A participant in a covered transaction may rely upon a certification of a prospective participant in a lower tier covered transaction that it is not proposed for debarment under 48 CFR part 9, subpart 9.4, debarred, suspended, ineligible, or voluntarily excluded from the covered transaction, unless it knows that the certification is erroneous. A participant may decide the method and frequency by which it determines the eligibility of its principals. Each participant may, but is not required to, check the List of Parties Excluded from Federal Procurement and Nonprocurement Programs.

9. Nothing contained in the foregoing shall be construed to require establishment of a system of records in order to render in good faith the certification required by this clause. The knowledge and information of a participant is not required to exceed that which is normally possessed by a prudent person in the ordinary course of business dealings.

10. Except for transactions authorized under paragraph 6 of these instructions, if a participant in a covered transaction knowingly enters into a lower tier covered transaction with a person who is proposed for debarment under 48 CFR part 9, subpart 9.4, suspended, debarred, ineligible, or voluntarily excluded from participation in this transaction, in addition to other

remedies available to the Federal Government, the department or agency may terminate this transaction for cause or default.

Certification Regarding Debarment, Suspension, and Other Responsibility Matters—Primary Covered Transactions

(1) The prospective primary participant certifies to the best of its knowledge and belief, that it and its principals:

(a) Are not presently debarred, suspended, proposed for debarment, declared ineligible, or voluntarily excluded by any Federal department or agency;

(b) Have not within a three-year period preceding this proposal been convicted of or had a civil judgment rendered against them for commission of fraud or a criminal offense in connection with obtaining, attempting to obtain, or performing a public (Federal, State or local) transaction or contract under a public transaction; violation of Federal or State antitrust statues or commission of embezzlement, theft, forgery, bribery, falsification or destruction of records, making false statements or receiving stolen property;

(c) Are not presently indicated for or otherwise criminally or civilly charged by a governmental entity (Federal, State or local) with commission of any of the offenses enumerated in paragraph (1)(b) of this certification; and

(d) Have not within a three-year period preceding this application/proposal had one or more public transactions (Federal, State or local) terminated for cause or default.

(2) Where the prospective primary participant is unable to certify to any of the statements in this certification, such prospective participant shall attach an explanation to this proposal.

Certification Regarding Lobbying

Certification for Contracts, Grants, Loans, and Cooperative Agreements

The undersigned certifies, to the best of his or her knowledge and belief, that:

(1) No Federal appropriated funds have been paid or will be paid, by or on behalf of the undersigned, to any person for influencing or attempting to influence an officer or employee of any agency, a Member of Congress, an officer or employee of Congress, or an employee of a Member of Congress in connection with the awarding of any Federal contract, the making of any Federal grant, the making of any Federal loan, the entering into of any cooperative agreement, and the extension, continuation, renewal, amendment, or modification of any Federal contract, grant, loan, or cooperative agreement.

(2) If any funds other than Federal appropriated funds have been paid or will be paid to any person for influencing or attempting to influence an officer or employee of any agency, a Member of Congress, an officer or employee of Congress, or an employee of a Member of Congress in connection with this Federal contract, grant, loan or cooperative agreement, the undersigned shall complete and submit Standard Form-LLL, ''Disclosure Form to Report Lobbying,'' in accordance with its instructions.

(3) The undersigned shall require that the language of this certification be included in the award documents for all subawards at all tiers (including subcontracts, subgrants, and contracts under grants, loans, and cooperative agreements) and that all subrecipients shall certify and disclose accordingly.

This certification is a material representation of fact upon which reliance was placed when this transaction was made or entered into. Submission of this certification is a prerequisite for making or entering into this transaction imposed by section 1352, title 31 U.S. Code. Any person who fails to file the required certification shall be subject to a civil penalty of not less than $10,000 and not more than $100,000 for each such failure.

State for Loan Guarantee and Loan Insurance

The undersigned states, to the best of his or her knowledge and belief, that:

If any funds have been paid or will be paid to any person for influencing or attempting to influence an officer or employee of any agency, a Member of Congress, an officer or employee of Congress, or an employee of a Member of Congress in connection with this commitment providing for the United States to insure or guarantee a loan, the undersigned shall complete and submit Standard Form-LLL ''Disclosure Form to Report Lobbying,'' in accordance with its instructions.

Submission of this statement is a prerequisite for making or entering into this transaction imposed by section 1352, title 31, U.S. Code. Any person who fails to file the required statement shall be subject to a civil penalty of not less than $10,000 and not more than $100,000 for each such failure.

_____

Signature

_____

Title

_____

Organization

_____

Date

BILLING CODE 4184–01–P

DISCLOSURE OF LOBBYING ACTIVITIES

Approved by OMB
0348-0046

Complete this form to disclose lobbying activities pursuant to 31 U.S.C. 1352
(See reverse for public burden disclosure.)

1. **Type of Federal Action:** ☐ a. contract b. grant c. cooperative agreement d. loan e. loan guarantee f. loan insurance	2. **Status of Federal Action:** ☐ a. bid/offer/application b. initial award c. post-award	3. **Report Type:** ☐ a. initial filing b. material change **For Material Change Only:** year _____ quarter _____ date of last report _____
4. **Name and Address of Reporting Entity:** ☐ Prime ☐ Subawardee Tier _____, *if known*: **Congressional District**, *if known*:	5. **If Reporting Entity in No. 4 is Subawardee, Enter Name and Address of Prime:** **Congressional District**, *if known*:	
6. **Federal Department/Agency:**	7. **Federal Program Name/Description:** CFDA Number, *if applicable*: _____	
8. **Federal Action Number**, *if known*:	9. **Award Amount**, *if known*: $	
10. a. **Name and Address of Lobbying Entity** (*if individual, last name, first name, MI*):	b. **Individuals Performing Services** (*including address if different from No. 10a*) (*last name, first name, MI*):	
(*attach Continuation Sheet(s) SF-LLL-A, if necessary*)		
11. **Amount of Payment** (*check all that apply*): $ _____ ☐ actual ☐ planned	13. **Type of Payment** (*check all that apply*): ☐ a. retainer ☐ b. one-time fee ☐ c. commission ☐ d. contingent fee ☐ e. deferred ☐ f. other; specify: _____	
12. **Form of Payment** (*check all that apply*): ☐ a. cash ☐ b. in-kind; specify: nature _____ value _____		
14. **Brief Description of Services Performed or to be Performed and Date(s) of Service, including officer(s), employee(s), or Member(s) contacted, for Payment Indicated in Item 11:** (*attach Continuation Sheet(s) SF-LLL-A, if necessary*)		
15. **Continuation Sheet(s) SF-LLL-A attached:** ☐ Yes ☐ No		
16. Information requested through this form is authorized by title 31 U.S.C. section 1352. This disclosure of lobbying activities is a material representation of fact upon which reliance was placed by the tier above when this transaction was made or entered into. This disclosure is required pursuant to 31 U.S.C. 1352. This information will be reported to the Congress semi-annually and will be available for public inspection. Any person who fails to file the required disclosure shall be subject to a civil penalty of not less than $10,000 and not more than $100,000 for each such failure.	**Signature:** _____ **Print Name:** _____ **Title:** _____ **Telephone No.:** _____ **Date:** _____	
Federal Use Only:		**Authorized for Local Reproduction** **Standard Form - LLL**

BILLING CODE 4184–01–C

Certification Regarding Environmental Tobacco Smoke

Public Law 103–227, Part C—Environmental Tobacco Smoke, also known as the Pro-Children Act of 1994 (Act), requires that smoking not be permitted in any portion of any indoor routinely owned or leased or contracted for by an entity and used routinely or regularly for provision of health, day care, education, or library services to children under the age of 18, if the services are funded by Federal programs either directly or through State or local governments, by Federal grant, contract, loan, or loan guarantee. The law does not apply to children's services provided in private residences, facilities funded solely by Medicare or Medicaid funds, and portions of facilities used for inpatient drug or alcohol treatment. Failure to comply with the provisions of the law may result in the imposition of a civil monetary penalty of up to $1,000 per day and/or the imposition of an administrative compliance order on the responsible entity.

By signing and submitting this application the applicant/grantee certifies that it will comply with the requirements of the Act. The applicant/grantee further agrees that it will require the language of this certification be included in any subawards which contain provisions for the children's services and that all subgrantees shall certify accordingly.

[FR Doc. 97–8840 Filed 4–7–97; 8:45 am]

BILLING CODE 4184–01–P

DEPARTMENT OF HEALTH AND HUMAN SERVICES

Food and Drug Administration

Grassroots Consumer Participation: Public Meeting

AGENCY: Food and Drug Administration, HHS.

ACTION: Notice of a public meeting.

SUMMARY: The Food and Drug Administration (FDA) is announcing a grassroots consumer exchange meeting between the general public and FDA officials. The meeting will be chaired by FDA's Cincinnati District Director and is intended to encourage dialogue between consumers and FDA officials, to solicit consumers' concerns about the drug review process, drug clinical trials (including inclusion of women in clinical trials), and to discuss how FDA can improve consumer services.

DATES: The public meeting will be held on Tuesday, April 29, 1997, 9 a.m. to 12 m.

ADDRESSES: The public meeting will be held at the Cincinnati Bell Long Distance Bldg., 36 East 7th St., rm. 1703, Cincinnati, OH.

FOR FURTHER INFORMATION CONTACT: Marilyn R. Zipkes, Food and Drug Administration, 1141 Central Pkwy., Cincinnati, OH 45212, 513–684–3501, ext. 110.

SUPPLEMENTARY INFORMATION: The purpose of the meeting is to encourage dialogue between consumers and FDA officials, to identify consumers' current and future health concerns, and to enhance relations between consumers and FDA. There is no registration fee for this meeting. Interested persons are encouraged to register early because space is limited. To register contact the contact person listed above.

Dated: March 31, 1997.

William K. Hubbard,

Associate Commissioner for Policy Coordination.

[FR Doc. 97–8908 Filed 4–7–97; 8:45 am]

BILLING CODE 4160–01–F

DEPARTMENT OF HEALTH AND HUMAN SERVICES

Food and Drug Administration

[Docket No. 97M–0126]

CIBA Vision Corp.; Premarket Approval of Unizyme Enzymatic Cleaner

AGENCY: Food and Drug Administration, HHS.

ACTION: Notice.

SUMMARY: The Food and Drug Administration (FDA) is announcing its approval of the application by CIBA Vision Corp., Duluth, GA, for premarket approval, under the Federal Food, Drug, and Cosmetic Act (the act), of Unizyme Enzymatic Cleaner. FDA's Center for Devices and Radiological Health (CDRH) notified the applicant, by letter of January 31, 1997, of the approval of the application.

DATES: Petitions for administrative review by May 8, 1997.

ADDRESSES: Written requests for copies of the summary of safety and effectiveness data and petitions for administrative review to the Dockets Management Branch (HFA–305), Food and Drug Administration, 12420 Parklawn Dr., rm. 1–23, Rockville, MD 20857.

FOR FURTHER INFORMATION CONTACT: James F. Saviola, Center for Devices and Radiological Health (HFZ–460), Food and Drug Administration, 9200 Corporate Blvd., Rockville, MD 20850, 301–594–1744.

SUPPLEMENTARY INFORMATION: On August 15, 1996, CIBA Vision Corp., Duluth, GA, 30155–1518, submitted to CDRH an application for premarket approval of Unizyme Enzymatic Cleaner. The device is a periodic cleaner and is indicated for use with (hydrogen peroxide), lens care systems in the weekly cleaning of soft (hydrophilic) contact lenses (including daily wear, extended wear, tinted lenses, and lenses prescribed for scheduled replacement).

In accordance with the provisions of section 515(c)(2) of the act (21 U.S.C. 360e(c)(2)) as amended by the Safe Medical Devices Act of 1990, this premarket approval application (PMA) was not referred to the Ophthalmic Devices Panel of the Medical Devices Advisory Committee, an FDA advisory committee, for review and recommendation because the information in the PMA substantially duplicates information previously reviewed by this panel. On January 31, 1997, CDRH approved the application by a letter to the applicant from the Director of the Office of Device Evaluation, CDRH.

A summary of the safety and effectiveness data on which CDRH based its approval is on file in the Dockets Management Branch (address above) and is available from that office upon written request. Requests should be identified with the name of the device and the docket number found in brackets in the heading of this document.

Opportunity for Administrative Review

Section 515(d)(3) of the act authorizes any interested person to petition, under section 515(g) of the act, for administrative review of CDRH's decision to approve this application. A petitioner may request either a formal hearing under 21 CFR part 12 of FDA's administrative practices and procedures regulations or a review of the application and CDRH's action by an independent advisory committee of experts. A petition is to be in the form of a petition for reconsideration under 21 CFR 10.33(b). A petitioner shall identify the form of review requested (hearing or independent advisory committee) and shall submit with the petition supporting data and information showing that there is a genuine and substantial issue of material fact for resolution through administrative review. After reviewing the petition, FDA will decide whether to grant or deny the petition and will publish a notice of its decision in the **Federal Register**. If FDA grants the petition, the notice will state the issue to be reviewed, the form of the review to be used, the persons who may participate in the review, the time and place where the review will occur, and other details.

Petitioners may, at any time on or before May 8, 1997, file with the Dockets Management Branch (address above) two copies of each petition and supporting data and information, identified with the name of the device and the docket number found in brackets in the heading of this document. Received petitions may be seen in the office above between 9 a.m. and 4 p.m., Monday through Friday.

This notice is issued under the Federal Food, Drug, and Cosmetic Act (secs. 515(d), 520(h)(21 U.S.C. 360e(d), 360j(h))) and under authority delegated to the Commissioner of Food and Drugs (21 CFR 5.10) and redelegated to the Director, Center for Devices and Radiological Health (21 CFR 5.53).

Dated: March 4, 1997.

Joseph A. Levitt,

Deputy Director for Regulations Policy, Center for Devices and Radiological Health.

[FR Doc. 97–8853 Filed 4–7–97; 8:45 am]

BILLING CODE 4160–01–F

DEPARTMENT OF HEALTH AND HUMAN SERVICES

Health Care Financing Administration

[Document Identifier: HCFA–643]

Agency Information Collection Activities: Submission for OMB Review; Comment Request

In compliance with the requirement of section 3506(c)(2)(A) of the Paperwork Reduction Act of 1995, the Health Care Financing Administration (HCFA), Department of Health and Human Services, has submitted to the Office of Management and Budget (OMB) the following proposal for the collection of information. Interested persons are invited to send comments regarding the burden estimate or any other aspect of this collection of information, including any of the following subjects: (1) The necessity and utility of the proposed information collection for the proper performance of the agency's functions; (2) the accuracy of the estimated burden; (3) ways to enhance the quality, utility, and clarity of the information to be collected; and (4) the use of automated collection techniques or other forms of information technology to minimize the information collection burden.

Type of Information Collection Request: Reinstatement, without change, of previously approved collection for which approval has expired; *Title of Information Collection:* Hospice Survey and Deficiencies Report Form and Supporting Regulations 42 CFR Sections 488,488.26(c), 442.30(a)(4), 442, Subpart B, C, D, E and F; *Form No.:* HCFA–643; *Use:* The survey report form and supporting regulations are needed to ensure provider compliance with Medicare and Medicaid conditions of participation. In order to participate in the Medicare program, a hospice must meet certain Federal health and safety conditions of participation. The survey report form will be used by State surveyors to record data about a hospice's compliance with Federal health and safety conditions in order to initiate the certification or recertification process. *Frequency:* Annually; *Affected Public:* State, Local or Tribal Govt, Federal Govt; *Number of Respondents:* 2,150; *Total Annual Responses:* 2,150; *Total Annual Hours:* 5,375.

To obtain copies of the supporting statement for the proposed paperwork collections referenced above, access HCFA's WEB SITE ADDRESS at http://www.hcfa.gov/regs/prdact95.htm, or to obtain the supporting statement and any related forms, E-mail your request, including your address and phone number, to Paperwork@hcfa.gov, or call the Reports Clearance Office on (410) 786–1326. Written comments and recommendations for the proposed information collections must be mailed within 30 days of this notice directly to the HCFA Paperwork Clearance Officer designated at the following address: OMB Human Resources and Housing Branch, Attention: Allison Eydt, New Executive Office Building, Room 10235, Washington, D.C. 20503.

Dated: March 26, 1997.

Edwin J. Glatzel,

Director, Management Analysis and Planning Staff, Office of Financial and Human Resources, Health Care Financing Administration.

[FR Doc. 97–8949 Filed 4–7–97; 8:45 am]

BILLING CODE 4120–03–P

DEPARTMENT OF HEALTH AND HUMAN SERVICES

National Institutes of Health

National institute of Dental Research; Notice of Closed Meetings

Pursuant to Section 10(d) of the Federal Advisory Committee Act, as amended (5 U.S.C. Appendix 2), notice is hereby given of the following National Institute of Dental Research Special Emphasis Panel (SEP) meetings:

Name of SEP: National Institute of Dental Research Special Emphasis Panel-Review of R03 application (97–32).
Date: April 3, 1997.
Time: 2:30 p.m.
Place: Natcher Building, Rm. 4AN–44F, National Institutes of Health, Bethesda, MD 20892, (teleconference).
Contact Person: Dr. Philip Washko, Scientific Review Administrator, 4500 Center Drive, Natcher Building, Room 4AN–44F, Bethesda, MD 20892, (301) 594–2372.
Purpose/Agenda: To evaluate and review grant applications and/or contract proposals.

Name of SEP: National Institute of Dental Research Special Emphasis Panel-Review of R03 application (97–31).
Date: April 7, 1997.
Time: 10:00 a.m.
Place: Natcher Building, Rm. 4AN–44F, National Institutes of Health, Bethesda, MD 20892, (teleconference).
Contact Person: Dr. Philip Washko, Scientific Review Administrator, 4500 Center Drive, Natcher Building, Room 4AN–44F, Bethesda, MD 20892, (301) 594–2372.
Purpose/Agenda: To evaluate and review grant applications and/or contract proposals.

Name of SEP: National Institute of Dental Research Special Emphasis Panel-Review of R44 application (97–27).
Date: April 8, 1997.
Time: 1:00 p.m.
Place: Natcher Building, Rm. 4AN–44F, National Institutes of Health, Bethesda, MD 20892, (teleconference).
Contact Person: Dr. George Hausch, Chief, Grants Review Section, 4500 Center Drive, Natcher Building, Room 4AN–44F, Bethesda, MD 20892, (301) 594–2372.
Purpose/Agenda: To evaluate and review grant applications and/or contract proposals.

Name of SEP: National Institute of Dental Research Special Emphasis Panel-Review of R03 Applications (97–40).
Date: April 11, 1997.
Time: 2:00 p.m.
Place: Natcher Building, Rm. 4AN–44F, National Institutes of Health, Bethesda, MD 20892, (teleconference).
Contact Person: Dr. George Hausch, Chief, Grants Review Section, 4500 Center Drive, Natcher Building, Room 4AN–44F, Bethesda, MD 20892, (301) 594–2372.
Purpose/Agenda: To evaluate and review grant applications and/or contract proposals.

Name of SEP: National Institute of Dental Research Special Emphasis Panel-Review of R03 application (97–36).
Date: April 15, 1997.
Time: 10:00 a.m.
Place: Natcher Building, Rm. 4AN–44F, National Institutes of Health, Bethesda, MD 20892, (teleconference).
Contact Person: Dr. Philip Washko, Scientific Review Administrator, 4500 Center Drive, Natcher Building, Room 4AN–44F, Bethesda, MD 20892, (301) 594–2372.
Purpose/Agenda: To evaluate and review grant applications and/or contract proposals.

Name of SEP: National Institute of Dental Research Special Emphasis Panel-Review of R03 applications (97–35).
Date: April 24, 1997.
Time: 10:00 a.m.
Place: Natcher Building, Rm. 4AN–44F, National Institutes of Health, Bethesda, MD 20892, (teleconference).
Contact Person: Dr. Philip Washko, Scientific Review Administrator, 4500 Center

Drive, Natcher Building, Room 4AN–44F, Bethesda, MD 20892, (301) 594–2372.

Purpose/Agenda: To evaluate and review grant applications and/or contract proposals.

This notice is being published less than fifteen days prior to the meetings due to the urgent need to meet timing limitations imposed by the review and funding cycle.

Name of SEP: National Institute of Dental Research Special Emphasis Panel-RFA Review: Oral Research Centers (97–23).

Date: April 27–28, 1997.

Time: 8:30 a.m.

Place: Hyatt Hotel, Dulles, 2300 Dulles Corner Blvd., Herndon, VA 22071.

Contact Person: Dr. Yong Shin, Ph.D., Scientific Review Administrator, 4500 Center Drive, Natcher Building, Room 4AN–44F, Bethesda, MD 20892, (301) 594–2372.

Purpose/Agenda: To evaluate and review grant applications and/or contract proposals.

The meetings will be closed in accordance with the provisions set forth in secs. 552b(c)(4) and 552b(c)(6), Title 5, U.S.C. Applications and/or proposals and the discussions could reveal confidential trade secrets or commercial property such as patentable material and personal information concerning individuals associated with the applications and/or proposals, the disclosure of which would constitute a clearly unwarranted invasion of personal privacy.

(Catalog of Federal Domestic Assistance Program No. 93.121, Oral Diseases and Disorders Research)

Dated: April 3, 1997.

LaVerne Y. Stringfield,

Committee Management Officer, NIH.

[FR Doc. 97–8988 Filed 4–3–97; 3:50 pm]

BILLING CODE 4140–01–M

DEPARTMENT OF HEALTH AND HUMAN SERVICES

Substance Abuse and Mental Health Services Administration

Special Emphasis Panel II Meeting

Pursuant to Public Law 92–463, notice is hereby given of the following meeting of the SAMHSA Special Emphasis Panel II in April.

A summary of the meeting may be obtained from: Ms. Dee Herman, Committee Management Liaison, SAMHSA Office of Extramural Activities Review, 5600 Fishers Lane, Room 17–89, Rockville, Maryland 20857. *Telephone:* (301) 443–4783.

Substantive program information may be obtained from the individual named as Contact for the meeting listed below.

The meeting will include the review, discussion and evaluation of individual contract proposals. This discussion could reveal personal information concerning individuals associated with the proposals and confidential and financial information about an individual's proposal. This discussion may also reveal information about procurement activities exempt from disclosure by statute and trade secrets and commercial or financial information obtained from a person and privileged and confidential. Accordingly, the meeting is concerned with matters exempt from mandatory disclosure in Title 5 U.S.C. 552b(c) (3), (4), and (6) and 5 U.S.C. App. 2, section 10(d).

Committee Name: SAMHSA Special Emphasis Panel II.

Meeting Dates: April 21–22, 1997.

Place: Residence Inn—Bethesda, Calvert Room, 7335 Wisconsin Avenue, Bethesda, MD 20814.

Closed: April 21, 1997 8:30 a.m.–5 p.m. April 22, 1997 8:30 a.m.–Adjournment.

Contact: Ferdinand W. Hui, Ph.D., Room 17–89, Parklawn Building, Telephone: (301) 443–9919 and FAX: (301) 443–3437.

Dated: April 2, 1997.

Jeri Lipov,

Committee Management Officer, Substance Abuse and Mental Health Services Administration.

[FR Doc. 97–8910 Filed 4–7–97; 8:45 am]

BILLING CODE 4162–20–P

DEPARTMENT OF THE INTERIOR

Office of the Secretary

Public Meeting of the Exxon Valdez Oil Spill Public Advisory Group

AGENCY: Department of the Interior, Office of the Secretary.

ACTION: Notice of meeting.

SUMMARY: The Department of the Interior, Office of the Secretary is announcing a public meeting of the Exxon Valdez Oil Spill Public Advisory Group.

DATES: May 28, 1997, at 9:00 a.m.

ADDRESSES: Fourth floor conference room, 645 ''G'' Street, Anchorage, Alaska.

FOR FURTHER INFORMATION CONTACT: Douglas Mutter, Department of the Interior, Office of Environmental Policy and Compliance, 1689 ''C'' Street, Suite 119, Anchorage, Alaska, (907) 271–5011.

SUPPLEMENTARY INFORMATION: The Public Advisory Group was created by Paragraph V.A.4 of the Memorandum of Agreement and Consent Decree entered into by the United States of America and the State of Alaska on August 27, 1991, and approved by the United States District Court for the District of Alaska in settlement of *United States of America* v. *State of Alaska*, Civil Action No. A91–081 CV. The agenda will include a review of current restoration activities and recommendations on projects for the fiscal year 1998 restoration work plan.

Dated: April 2, 1997.

Willie R. Taylor,

Director, Office of Environmental Policy and Compliance.

[FR Doc. 97–8951 Filed 4–7–97; 8:45 am]

BILLING CODE 4310–RG–P

DEPARTMENT OF THE INTERIOR

Bureau of Land Management

Notice of Proposed Information Collection, OMB Approval Number 1004–0019

AGENCY: Bureau of Land Management, Interior.

ACTION: Notice and request for comments.

SUMMARY: In accordance with the Paper Work Reduction Act of 1995, the Bureau of Land Management (BLM) is announcing its intention to request renewal of existing approval to collect certain information from individuals who apply to construct, maintain and use approved improvements on the rangelands to aid handling or caring for domestic livestock that are authorized to graze public land. Form 4120–7 (Range Improvement Permit) is used under authority of Sections 4 and 15 of the Taylor Grazing Act and associated regulations found at 43 CFR 4120.3. It requests information necessary to consider an application and make a decision concerning the proposed range improvement. Requested information is: Name and address, construction or maintain an existing improvement, purpose, location, and both estimated and subsequent final costs for the improvement. It also documents approval of range improvement permits and the BLM files.

DATES: Comments on the proposed information collection must be received by June 9, 1997 to be considered.

ADDRESSES: Comments may be mailed to: Regulatory Affairs Group (630), Bureau of Land Management, 1849 C Street N.W., Room 401, LS Bldg., Washington, D.C. 20240.

Comments may be sent via Internet to: WoComment@wo.blm.gov or to: gramey@wo.blm.gov. Please include ''Attn: 1004–0019'' and your name and return address in your Internet message.

Comments may be hand delivered to the Bureau of Land Management Administrative Record, Room 401, 1620 L Street, N.W., Washington, D.C.

Comments will be available for public review at the L Street address during regular business hours (8:45 a.m. to 4:15 p.m., Monday through Friday).

FOR FURTHER INFORMATION CONTACT: George Ramey, (202) 452–7747.

SUPPLEMENTARY INFORMATION: In accordance with 5 CFR 1320.8(d), BLM is required to provide 60-day notice in the **Federal Register** concerning a collection of information contained in current published rules to solicit comments on (a) Whether the proposed collection of information is necessary for the proper performance of the functions of the agency, including whether the information will have practical utility; (b) the accuracy of the agency's estimate of the burden of the proposed collection, including the validity of the methodology and assumptions used; (c) ways to enhance the quality, utility, and clarity of the information to be collected; and (d) ways to minimize the burden of the collection of information on those who are to respond, including through the use of appropriate automated, electronic, mechanical, or other technological collection techniques or other forms of information technology. BLM will receive and analyze any comments sent in response to this notice and include them with its request for approval from the Office of Management and Budget under 44 U.S.C. 3501 *et seq.*

The Taylor Grazing Act (TGA) of 1934 (43 U.S.C. 315, 315 *et seq.*), the Federal Land Policy and Management Act (FLPMA) of 1976 (43 U.S.C. 1701 *et seq.*), and the Public Rangelands Improvement Act (PRIA) of 1978 (43 U.S.C. 1901 *et seq.*) provide the authority for the Bureau of Land Management to administer the livestock grazing program consistent with land-use plans, multiple-use objectives, sustained yield, environmental values, economic considerations, and other factors. Sections 4 and 15 of the TGA and Regulations in 43 CFR 4120.3–3 allow permittees the opportunity to construct and maintain approved range improvements on the public lands. The Regulations were issued on February 21, 1984 (49 FR 6452) and last amended on February 22, 1995 (60 FR 9964). Form 4120–7, Range Improvement Permit, is the approved form to be used for requests and approval of a range improvement.

The BLM Authorizes range improvements to facilitate handling livestock while they are using the public lands as an important and integral part of grazing use administration. The *information provided by the permittees* and lessees is used by the BLM to review requests for privately funded range improvements for compatibility with multiple-use objectives and land-use plans, develop appropriate conditions and specifications, and approve or reject the requests. The *name and address* is used to determine if the applicant is a grazing permittee in compliance with 43 CFR 4120.3–3 (a). Applicants also *specifies if they will construct* a new improvement *or* obtain a permit to *maintain* an existing improvement. A brief *purpose or justification* is stated to determine the compatibility with multiple use plans. The *applicant identifies the specific location* to determine land ownership and if needed, a plat is provided on the reverse to delineate linear improvements such as fences. An *estimate of cost or value is recorded* in the event land ownership changes that require appraisal of private assets for reimbursement of permittees for the present worth of improvements in compliance with 43 CFR 4120.3–5 and 43 CFR 4120.3–6 (c). *The BLM completes* administrative codes for its records system, prepares special terms or conditions as appropriate, assigns a completion date for construction, signs approval and makes inspection of completed range improvement. A copy of the approved permit is retained to document the BLM files.

Without this information, the BLM could not fulfill its responsibility to manage uses of the public land as required by law. Some facilities would be inconsistent with management objectives, improperly built, or in conflict with other uses. Recognition of the applicant's investment would not take place causing further legal problems if the land were sold and restitution was requested of the new owner.

The information required by law is only available from the applicants. Specific information is only known by an applicant who identifies specific information pertinent to the purposes of the form in completing an application. The form was designed to request only basic information required to administer the permitting process. The majority of the information is contained in the applicant's personal plans for the specific improvement and does not impose a significant burden.

Since grazing and range improvement on the unreserved public lands is administered only by the BLM, there is no duplication of information collections.

Since each applicant must meet qualifications, the information collection has to be made each time a range improvement is sought. This application is only completed once during the period of ownership of the range improvement. This information collection is consistent with guidelines in 5 CFR 1320.6 without which the BLM would not be able to administer the Public Land Laws.

There are no assurances of confidentiality but the Privacy Act Notice is provided to inform the applicants of the uses to be made. There are no plans for publishing information for statistical use.

On March 25, 1994 the BLM published in the **Federal Register** a notice of proposed rulemaking to amend the regulations for livestock grazing. A comment period of 120 days was allowed. Included in the notice was a request for comments on the information collections involved, including this collection (1004–0019). Several comments were received on this section addressing information resources and questions of timeliness relating to compliance. **Federal Register**, February 22, 1995, page 9925. Copies of the comments are on file at the Bureau of Land Management, Eastern States Office, 7450 Boston Boulevard, Springfield, Virginia 22153, and may be reviewed by contacting Jim Gegen at that Office.

The BLM experience and recent tabulations of activity indicate approximately 60 applications are processed each year. The annual cost to the Government is estimated to be $1,200 based on personnel time to review and processing at $20 per hour, including entering information into an automated range improvement project system. Information in the range improvement reporting system is used as a basis for making the estimation. Annual costs to the 60 respondents is estimated at $400 based on 20 burden hours at $20 per hour to prepare the form and to receive and file their approved copy.

Because of the variations in size and complexity of range improvements, some of the 60 responses may take as little as ten minutes to complete while others may take up to 30 minutes with an average of a 20 minute burden for each with an annual burden of 20 hours.

Any interested member of the public may request and obtain, without charge, a copy of BLM Form 4120–7 the person identified under **FOR FURTHER INFORMATION CONTACT**.

All responses to this notice will be summarized and included in the request for Office of Management and Budget approval. All comments will also become a matter of public record.

Dated: April 2, 1997.

Annetta L. Cheek,

Chief, Regulatory Management Team.

[FR Doc. 97–8852 Filed 4–7–97; 8:45 am]

BILLING CODE 4310–84–P

DEPARTMENT OF THE INTERIOR

Bureau of Land Management

[ID–933–5420–00–D020; IDI 32067 & ID–933–5420–00–D021; IDI 32132]

Notice of Issuance of Two Disclaimers of Interest to Lands; Idaho

AGENCY: Bureau of Land Management, Interior.

ACTION: Notice of Issuance of Disclaimers of Interest in Lands in Idaho.

SUMMARY: The United States of America, pursuant to the provisions of section 315 of the Federal Land Policy and Management Act of 1976 (43 U.S.C. 1745), proposes to disclaim all interest in the following described lands to the current owners of record. A disclaimer of interest will be issued to the Trustees of the Eugene F. and Viola M. Edwards Revocable Trust for the following described property, to wit:

Boise Meridian, Idaho

T. 21 N., R. 22 E.,

All lands in section 31, north of the east-west centerline of the section and between the 1881 adjusted right bank meanders and the right bank of the present channel of the Salmon River, except for lot 13, as shown on the official plat approved July 24, 1996. Another disclaimer of interest will be issued to the Trustees in Trust of the Del Monto Fife Trust dba Fife Enterprises for the following described property, to wit:

Bosie Meridian, Idaho

T. 21 N., R. 22 E.,

All lands lying between the adjusted 1881 meanders and the present left bank of the Salmon River fronting lots 5 and 6 in section 19; fronting lots 5, 6, 7 and 8 in section 30; and fronting lots 5, 6, 7, 8, and 9, except for lot 15 and the accretions to lot 15 designated as lot 16, in section 31; according to the official records and the plat approved July 24, 1996. The official records, being the original 1881 public land survey and the dependent resurvey approved and accepted July 24, 1996, show that the lands described above are a combination of avulsed, accreted, and non-substantial omitted land, and an unsurveyed island. Except for the island, the remaining lands are not public domain. Therefore, the applications by the Trustees of the Eugene F. and Viola M. Edwards Revocable Trust and the Trustees of the Del Monto Fife Trust dba Fife Enterprises, for disclaimers from the United States, will be approved if no valid objection is received. This action will clear a cloud on the title of both applicant's land.

DATES: Comments or protest to this action should be received by June 9, 1997.

ADDRESSES: Comments or protests must be filed with: State Director (933), Bureau of Land Management, 1387 S. Vinnell Way, Boise, Id 83709.

FOR FURTHER INFORMATION CONTACT: Cathie Foster, at the above address or (208) 373–3863.

Dated: March 31, 1997.

Dave Holman,

Acting Branch Chief, Lands and Minerals Resource Services Division.

[FR Doc. 97–8867 Filed 4–7–97; 8:45 am]

BILLING CODE 4310–GG–M

DEPARTMENT OF THE INTERIOR

Bureau of Land Management

[NV–931–1430–01; N–59476]

Public Land Order No. 7253; Withdrawal of Public Land for the Protection of the Pah Rah Range; Nevada

AGENCY: Bureau of Land Management, Interior.

ACTION: Public Land Order.

SUMMARY: This order withdraws 21,969.012 acres of public land from surface entry and mining for 5 years to protect recreational, cultural, wildlife, riparian, and watershed values in the Pah Rah Range while the Bureau of Land Management completes land use planning for this land.

EFFECTIVE DATE: April 8, 1997.

FOR FURTHER INFORMATION CONTACT: Dennis Samuelson, BLM Nevada State Office, P.O. Box 12000, Reno, Nevada 89520, 702–785–6532.

By virtue of the authority vested in the Secretary of the Interior by Section 204 of the Federal Land Policy and Management Act of 1976, 43 U.S.C. 1714 (1988), it is ordered as follows:

1. Subject to valid existing rights, the following described public land is hereby withdrawn from settlement, sale, location, or entry under the general land laws, including the United States mining laws (30 U.S.C. Ch. 2 (1988)), but not from leasing under the mineral leasing laws, for the protection of the Pah Rah Range:

Mount Diablo Meridian

T. 21 N., R. 22 E.,
Sec. 12;
Sec. 24.
T. 22 N., R. 22 E.,
Sec. 12;
Sec. 13;
Sec. 24;
Sec. 25, E½E½, and the portion of the W½E½ lying east of the center of the summit of the ridge;
Sec. 36.
T. 21 N., R. 23 E.,
Sec. 2, lots 8 to 21, inclusive;
Sec. 3, lots 1 to 5, inclusive, S½N½, N½SW¼, SE¼SW¼, and SE¼;
Sec. 4, lots 5 to 20, inclusive;
Sec. 5, lots 1 to 4, inclusive, S½N½, and S½;
Sec. 6, lots 8 to 23, inclusive;
Sec. 7, lots 1 to 4, inclusive, E½, and E½W½;
Sec. 8, lots 1 to 10, inclusive, SW¼NE¼, S½NW¼, E½SW¼, and NW¼SE¼;
Sec. 9, lot 1, NW¼NE¼, S½NE¼, NW¼, and S½;
Sec. 10, lots 1 to 8, inclusive;
Sec. 11, N½N½, SE¼NE¼, SW¼NW¼, and E½SE¼;
Sec. 12, lots 1 to 3, inclusive;
Sec. 17, lots 3 to 4, inclusive, N½, and N½S½;
Sec. 18, lots 5 to 20, inclusive;
Sec. 19, lots 1 to 4, inclusive, N½NE¼, SW¼NE¼, E½NW¼, NE¼SW¼, and NW¼SE¼;
Sec. 24, E½SW¼NW¼;
Sec. 36, N½NE¼.
T. 22 N., R. 23 E.,
Sec. 6, lots 1 to 4, inclusive, SE¼SW¼, and S½SE¼;
Sec. 7, lots 1 and 7 to 13, inclusive, NE¼NE¼, S½NE¼, NE¼NW¼, and SE¼;
Sec. 8, lots 5 to 20, inclusive;
Sec. 16, lots 2 to 5, inclusive, W½E½, and W½;
Sec. 17, excluding MS 4230;
Sec. 18, lots 5 to 20, inclusive;
Sec. 19, lots 1 to 4, inclusive, E½, and E½W½;
Sec. 20, excluding MS 4230;
Sec. 21;
Sec. 22, lots 1 to 3, inclusive, W½NW¼, and SW¼;
Sec. 28, lots 1 to 4, inclusive, W½E½, and W½;
Sec. 29;
Sec. 30, lots 5 to 20, inclusive;
Sec. 31, lots 1 to 4, inclusive, E½, and E½W½;
Sec. 32;
Sec. 33;
Sec. 34, lots 1 to 7, inclusive, S½NE¼, SE¼NW¼, E½SW¼, and SE¼.

The area described contains 21,969.012 acres in Washoe County.

2. The withdrawal made by this order does not alter the applicability of those public land laws governing the use of lands under lease, license, or permit, or governing the disposal of their mineral or vegetative resources other than under the mining laws.

3. This withdrawal will expire 5 years from the effective date of this order unless, as a result of a review conducted before the expiration date pursuant to Section 204(f) of the Federal Land Policy and Management Act of 1976, 43 U.S.C. 1714(f) (1988), the Secretary

determines that the withdrawal shall be extended.

Dated: March 31, 1997.

Bob Armstrong,

Assistant Secretary of the Interior.

[FR Doc. 97–8960 Filed 4–7–97; 8:45 am]

BILLING CODE 4310–HC–P

DEPARTMENT OF THE INTERIOR

Bureau of Land Management

[WY–985–0777–66; WYW 136534]

Proposed Realty Action, Park County, Wyoming

AGENCY: Bureau of Land Management, Interior.

ACTION: Notice of Realty Action.

SUMMARY: The Bureau of Land Management's (BLM's) Cody Resource Area has examined the following described public land and Bureau of Reclamation-withdrawn (BOR) land in Park County, Wyoming and have determined the land to be suitable for classification and lease to the city of Cody under the provisions of the Recreation and Public Purposes Act, as amended (43 U.S.C. 869 *et seq.*). The Area Manager, Wyoming Area Office, of the BOR has concurred with the examination and determination.

Sixth Principal Meridian, Wyoming

T. 52 N., R. 100 W.,

Sec. 6, a strip of land 350 feet long, 40 feet wide (0.32 acre), across a portion of lot 43 C as defined by map survey.

Sec. 7, W½ of lot 5, W½SE¼ of lot 5, SE¼SE¼ of lot 5, W½E½ of lot 39, SE¼SE¼ of lot 39, S½SW¼SE¼NE¼, NW¼NE¼SE¼, S½NE¼SE¼, NE¼NW¼SE¼, E½NW¼NW¼SE¼, E½SE¼NW¼SE¼, NE¼NE¼SW¼SE¼, N½N½SE¼SE¼;

Sec. 8, W½SW¼NW¼SW¼, NW¼NW¼SW¼SW¼.

Containing 148.18 acres, more or less.

The area to be leased consists of 92.5 acres for the archery range, and 3.63 acres for an access road (total 96.13 acres). The city of Cody proposes to use the land as an archery range, with a separate agreement between the city of Cody and the Cody Archery Club allowing the club to construct, operate, and maintain the archery range.

The area classified as suitable (148.18 acres) is greater than the area to be leased because of the need to include the access road in the lease. The land is not needed for Federal purposes. Leasing is consistent with current BLM land use planning, and would be in the public interest. Because of safety and vandalism concerns, the lease area 996.13 acreas) would be closed to general public use involving firearms, off-road vehicles, overnight camping, and after-dark activities. The lease, when issued, will be subject to the following terms, conditions and reservations:

1. Provisions of the Recreation and Public Purposes Act and to all applicable regulations of the Secretary of the Interior.
2. All valid existing rights documented on the official public land records at the time of lease issuance.
3. All minerals shall be received to the United States, together with the right to prospect for, mine, and remove the minerals.
4. Any other reservations that the authorized officer determines appropriate to ensure public access and proper management of Federal lands and interest therein.

An open house was held on February 24th, 1997, to inform the public, including adjacent landowners, of the proposal. No adverse comments were received.

Upon publication of this notice in the **Federal Reigster**, the land will be segregated from all other forms of appropriation under the public land laws, including the general mining laws, except for lease under the Recreation and Public Purposes Act and leasing under the mineral leasing laws.

Classification Comments: Interested parties may submit comments involving the suitability of the land for an archery range. Comments on the classification are restricted to whether the land is physically suited for the proposal, whether the use will maximize the future use or uses of the land, whether the use is consistent with local planning and zoning, or if the use is consistent with State and Federal programs.

Application Comments: Interested parties may submit comments regarding the specific use proposed in the application and plan of development, whether the BLM followed proper administrative procedures in reaching the decision, or any other factor not directly related to the suitability of the land for an archery range facility. Any adverse comments will be reviewed by the BLM State Director. In the absence of any adverse comments, the classification will become effective 60 days from the date of publication of this notice in the **Federal Register**.

FOR FURTHER INFORMATION CONTACT: Detailed information concerning this action is available for review at the office of the Bureau of Land Management, Cody Resource Area, 1002 Blackburn Avenue, Cody, Wyoming.

COMMENTS: For a period of 45 days from the date of publication of this notice in the **Federal Register**, interested persons may submit comments regarding the proposed classification or lease of the lands to the Area Manager, Cody Resource Area, P.O. Box 518, Cody, Wyoming 82414–0518. Comments, including names and street addresses of respondent will be available for public review at the Cody District Office, 1002 Blackburn Avenue, Cody, Wyoming during regular business hours (7:30 a.m. to 4:30 p.m.), Monday through Friday, except holidays. Individual respondents may request confidentiality. If you wish to withhold your name or address from public review or from disclosure under the Freedom of Information Act, you must state this prominently at the beginning of your comments. Such requests will be honored to the extent allowed by law. All submissions from organizations or businesses, and from individuals identifying themselves as representatives or officials of organizations or businesses, will be made available for public inspection in their entirety.

Dated: April 2, 1997.

Darrell Barnes,

Worland District Manager.

[FR Doc. 97–8906 Filed 4–7–97; 8:45 am]

BILLING CODE 4310–22–M

DEPARTMENT OF THE INTERIOR

Bureau of Land Management

[WY–980–1430–00; WYW 139351]

Proposed Exchange and Intent To Conduct a Planning Review for Great Divide Resource Area, Rawlins, WY

AGENCY: Bureau of Land Management, Interior.

ACTION: Notice.

SUMMARY: The Bureau of Land Management (BLM), Great Divide Resource Area, Rawlins, Wyoming, pursuant to Section 206 of the Act of October 21, 1976, as amended, 43 U.S.C. 1716, has entered into an agreement to initiate a land exchange in Carbon County, Wyoming. The BLM invites the public to identify issues and concerns to be addressed in the environmental analysis of the proposed exchange and planning review.

DATES: As part of this process, three public scoping meetings have been scheduled. The first scoping meeting is scheduled for April 21, 1997, at 6:30 p.m., at the Jeffrey Center Memorial Community Center, Third and Spruce, Rawlins, Wyoming. The second scoping meeting will take place in Saratoga, Wyoming, at 7:30 p.m., April 22, 1997, at the Saratoga High School. On April 24, 1997, at 6:30 p.m., the third scoping meeting will be held at the Town of

Hanna Administration Office, 301 S. Adams, Hanna, Wyoming.

Any additional public involvement activities that may become necessary will be announced through other notices, mailings, or news releases. If the planning review results in the need to amend the Great Divide Resource Management Plan (RMP), a 30-day comment/protest period on the amendment proposal will also be announced through other notices, mailings, or news releases.

Interested parties may submit comments concerning the proposed exchange to the Area Manager, Great Divide Resource Area, at the address below. In order to be considered in the environmental analysis of the proposed exchange, comments must be in writing to the Area Manager and must be postmarked or delivered no later than 45 days after initial publication of this notice.

FOR FURTHER INFORMATION CONTACT: Interested parties may obtain further information or request to be placed on the Rawlins BLM District mailing list by contacting John Spehar, Project Coordinator, at the Great Divide Resource Area Office, Bureau of Land Management, 1300 North Third Street, Rawlins, Wyoming 82301, telephone 307–328–4264.

SUPPLEMENTARY INFORMATION: The exchange has been jointly proposed by Wyoming Land Exchange Limited Liability Company (Wyoming Land Exchange) and the Bureau of Land Management (BLM). The exchange would result in the BLM acquiring private lands east of Seminoe Reservoir and Palm Livestock Company acquiring scattered lands in Carbon County, Wyoming. The proposed exchange would lock up in Federal ownership a 50,000 acre block of land east of Seminoe Reservoir and transfer into private ownership parcels of Federal land that are isolated and difficult to manage.

The following public lands located south, west, and east of Walcott, Wyoming, in the vicinity of Elk Mountain, and east, west, and north of Saratoga, Wyoming, are being considered for exchange by the United States:

Sixth Principal Meridian, Wyoming

T. 19 N., R. 80 W., 6th P.M., Carbon County, Wyoming
Section 2: Lots 1–4, S½N½, S½
T. 19 N., R. 81 W., 6th P.M., Carbon County, Wyoming
Section 6: Lots 1–7, S½NE¼, SE¼NW¼, E½SW¼, SE¼ (ALL)
Section 8: N½, NE¼SW¼, N½NW¼SW¼, SE¼NW¼SW¼, S½SW¼, SE¼
Section 14: S½S½
Section 18: Lots 1–4, E½, E½W½ (ALL)
Section 26: N½NE¼, W½, S½SE¼
T. 20 N., R. 81 W., 6th P.M., Carbon County, Wyoming
Section 2: NW¼SW¼SW¼, S½SW¼SW¼, SW¼SE¼SW¼
Section 6: Lots 1–6, E½SW¼
Section 8: NW¼NW¼, SE¼
Section 18: Lots 5–16
Section 20: SW¼SW¼
Section 28: SW¼
Section 30: Lots 1–4, E½, E½W½ (ALL)
Section 32: All
T. 21 N., R. 81 W., 6th P.M., Carbon County, Wyoming
Section 32: S½SE¼NE¼, NE¼NE¼SW¼, S½N½SW¼, S½SW¼, SE¼
Section 34: SW¼NW¼NE¼, SW¼NE¼, S½SE¼NE¼, NW¼SE¼NE¼, NW¼, SE¼
T. 17 N., R. 82 W., 6th P.M., Carbon County, Wyoming
Section 33: SE¼NE¼
Section 34: SW¼NW¼
T. 19 N., R. 82 W., 6th P.M., Carbon County, Wyoming
Section 2: Lot 1, SE¼NE¼, E½SE¼
Section 12: Lots 1–16 (ALL)
Section 14: SE¼NE¼, SE¼SW¼, SW¼SE¼, E½SE¼
Section 18: Lots 1–4, E½, E½W½ (ALL)
Section 22: Lot 1
Section 24: Lots 1–12
T. 20 N., R. 82 W., 6th P.M., Carbon County, Wyoming
Section 2: Lots 1–4, S½
Section 4: Lots 1–4, S½
Section 6: Lot 6, S½NE¼SW¼, SE¼SW¼, S½N½SE¼, S½SE¼
Section 8: All
Section 10: All
Section 12: All
Section 14: All
Section 18: Lots 1–4, E½, E½W½ (ALL)
Section 20: SE¼NE¼, W½NW¼, SE¼
Section 24: All
Section 26: N½S½
Section 28: SW¼
Section 30: Lots 1–4, E½, E½W½ (ALL)
T. 19 N., R. 83 W., 6th P.M., Carbon County, Wyoming
Section 18: Lots 1–4, E½, E½W½ (ALL)
Section 20: All
Section 28: W½W½
Section 32: All
T. 20 N., R. 83 W., 6th P.M., Carbon County, Wyoming
Section 2: S½NW¼SW¼, S½S½
Section 4: S½SW¼NW¼, SW¼SE¼NW¼, S½
Section 10: All
Section 12: All
Section 14: All
Section 24: All
Section 34: E½NE¼
T. 17 N., R. 84 W., 6th P.M., Carbon County, Wyoming
Section 6: Lots 2–6, SW¼NE¼, SE¼NW¼, NE¼SW¼, W½SE¼; with mineral estate included in exchange.
T. 18 N., R. 84 W., 6th P.M., Carbon County, Wyoming
Section 2: Lots 1–4, S½N½, S½ (ALL)
Section 4: Lots 1–4, S½N½, S½ (ALL)
Section 8: N½NW¼, SE¼NW¼, NE¼SW¼
Section 10: All
Section 14: All
Section 26: N½NW¼, SE¼NW¼, N½NE¼SW¼, N½SW¼NE¼SW¼, SE¼NE¼SW¼
T. 19 N., R. 84 W., 6th P.M., Carbon County, Wyoming
Section 24: ALL
T. 21 N., R. 85 W., 6th P.M., Carbon County, Wyoming
Section 8: Lots 4, 8, NW¼NE¼, W½, W½SE¼

Total Selected Federal Lands: Approximately 24,626 acres.

Reservations:

Public lands patented pursuant to this exchange will have the following reservations:

1. A right-of-way thereon for ditches or canals constructed by the authority of the United States pursuant to the Act of August 30, 1890, 43 U.S.C. 945.

2. Where minerals are to be reserved to the United States, the following is standard patent language:

All minerals in the lands so patented pursuant to Section 209 of the Federal Land Policy and Management Act of 1976, 43 U.S.C. 1719, including, without limitation, substances subject to disposition under the general mining laws, the general mineral leasing laws, the Materials Act and the Geothermal Steam Act, and to it, or persons authorized by it, the right to prospect for, mine and remove the minerals from the same under applicable law and such regulations as the Secretary of the Interior may prescribe. This includes all necessary and incidental activities conducted in accordance with the provisions of the mining, geothermal and mineral leasing, and material disposal laws in effect at the time such activities are undertaken, including, without limitation, necessary access and exit rights, all drilling, underground, open pit or surface mining operations, storage and transportation facilities deemed necessary and authorized under law and implementing regulations.

3. Covenants for the protection of archaeological sites that are determined to be of National Historic Register quality may be in the patent. Covenants would include restrictions on disturbance of the sites, removal of artifacts, guaranteed access to the sites for evaluation by BLM and the State Historic Preservation Officer, and penalties for violating the archaeological covenants.

In exchange, the United States would acquire the following described lands located east of Seminoe Reservoir in Carbon County:

Sixth Principal Meridian, Wyoming

T. 22 N., R. 83 W., 6th P.M., Carbon County, Wyoming
Section 1: All
Section 3: All
Section 5: All
Section 7: All
Section 9: All
Section 11: All
Section 13: All
Section 15: All
Section 17: W½
Section 19: All
Section 21: All
Section 23: All
Section 29: All
Section 31: All

T. 23 N., R. 83 W., 6th P.M., Carbon County, Wyoming
Section 1: All

Less that portion situated below elevation of 6,357 feet above sea level as conveyed to the United States of America, as described in Warranty Deed dated October 7, 1938, and recorded in Book 236 Page 138, of the Records of Carbon County, Wyoming.

Section 3: All
Section 5: All
Section 7: All
Section 9: All
Section 11: All
Section 13: All
Section 15: All
Section 17: All
Section 19: All
Section 21: All
Section 23: All
Section 27: All
Section 29: All
Section 31: All
Section 33: All
Section 35: All

T. 24 N., R. 83 W., 6th P.M., Carbon County, Wyoming
Section 19: All
Section 27: All
Section 29: All
Section 31: All
Section 33: All
Section 35: All

Less that portion of Section 19, 27, 29, and 35 situated below elevation 6,357 feet above sea level as conveyed to the United States of America, as described in Warranty Deed dated October 7, 1938, and recorded in Book 236 Page 138 of the Records of Carbon County, Wyoming.

T. 23 N., R. 84 W., 6th P.M., Carbon County, Wyoming
Section 1: All
Section 11: All
Section 13: All
Section 23: All
Section 25: All

Less that portion of Sections 1, 11, 13, 23, and 25, situated below elevation 6,357 feet above sea level as conveyed to the United States of America and as described in Warranty Deed dated October 7, 1938, and recorded in Book 236 Page 138 of the Records of Carbon County, Wyoming.

T. 24 N., R. 84 W., 6th P.M., Carbon County, Wyoming
Section 23: All
Section 25: All
Section 35: All

Less that portion of Sections 23, 25, and 35 situated below elevation 6,357 feet above sea level as conveyed to the United States of America and as described in Warranty Deed dated October 7, 1938, and recorded in Book 236 Page 138 of the Records of Carbon County, Wyoming.

Total Offered Non-Federal Lands: Approximately 24,900 acres.

The proposed exchange would be based on fair market value appraisal which would result in equal value for equal value, not necessarily acre for acre. This would ensure an equitable trade for the public and Wyoming Land Exchange and Palm Livestock Company.

Subject to valid existing rights, the public lands identified above have been segregated from appropriation under the public land laws and mineral laws for a period of 5 years.

Where the mineral estate is not included in the exchange, the mineral estate would remain in Federal ownership. The public lands identified above have a variety of rights-of-record, including rights-of-way. The records are located in the Great Divide Resource Area office in Rawlins, Wyoming.

Dated: April 2, 1997.

Alan R. Pierson,

State Director.

[FR Doc. 97–8907 Filed 4–4–97; 9:31 am]

BILLING CODE 4310–22–P

DEPARTMENT OF THE INTERIOR

Bureau of Land Management

[NV–010–2811–01]

Carson City District Fire Management Plan Amendment

AGENCY: Bureau of Land Management, Interior.

ACTION: Notice of intent to prepare a plan amendment and environmental analysis and invitation for public participation.

SUMMARY: The Carson City field office of the Bureau of Land Management proposes to amend the Lahontan and Walker Resource Management Plans to address the management of fire within the Carson City District. Fire is an integral part of the ecosystem of the Carson City District. The Federal Wildland Fire Policy states that wildland fire, as a critical natural process, must be reintroduced into the ecosystem. The RMP's do not address fire management and its role in the natural ecosystem. The resource management plan amendment process will serve as the basis for decisions on the management of fire in the Carson City District.

DATES AND ADDRESSES: Written comments on the plan amendment and environmental analysis are welcomed until May 6, 1997. Comments should be sent to Rosemary Thomas, Fire Management Officer, U.S. Bureau of Land Management, 1535 Hot Springs Road, Carson City, NV 89706.

SUPPLEMENTARY INFORMATION: The public is invited to participate in the identification of issues related to the management of fire in the Carson City District, located in western Nevada and northeastern California. Anticipated issues for the plan amendment are:

- Protection of human life
- Protection of Property
- Protection of natural/cultural resources
- Safe reintroduction of fire into natural ecosystems
- Reducing the cost of fire suppression
- Integration of fire and resource management strategies
- Air quality
- Recreation
- Watershed management
- Livestock grazing
- Visual resources
- Wildlife habitat

The plan amendment will focus on the following questions:

- Where is wildland fire not desired at all?
- Where is unplanned wildland fire likely to cause negative effects, but these effects may be mitigated or avoided through fuels management, prescribed fire, or other strategies?
- Where is fire desired to manage ecosystems, but there are constraints because of the existing vegetation condition?
- Where is fire desired, and there are no constraints associated with resource conditions or social and economic considerations?

A previous **Federal Register** Notice (Vol. 60, No. 57, page 15580, March 24, 1995) announced the District's intent to amend the Walker Resource Management Plan to address motorized vehicle designations and fire/woodland management for the Pine Nut Mountains. The fire/woodlands management issue will be incorporated into the District-wide fire management amendment. All public comments on the fire/woodland issue for the Pine Nut Mountains will be included as part of this scoping process for the District-wide fire management amendment. The Pine Nut Mountains Amendment will focus on the motorized vehicle management issue.

Planning documents and other pertinent materials may be examined at the Bureau of Land Management office in Carson City between 7:30 a.m. and 5:00 p.m., Monday through Friday.

Dated this 28th day of March, 1997.

John Singlaub,

District Manager, Carson City District.

[FR Doc. 97–8865 Filed 4–7–97; 8:45 am]

BILLING CODE 4310–HC–M

DEPARTMENT OF JUSTICE

Notice of Lodging of Consent Decree Pursuant to the Comprehensive Environmental Response, Compensation and Liability Act

Notice is hereby given that a proposed Consent Decree in *United States* v. *Conoco Inc.* was lodged on March 6, 1997 with the United States District Court for the Western District of Louisiana. The parties to the Decree are Conoco Inc. (''Conoco'') and the relevant natural resource trustees: the National Oceanic and Atmospheric Administration; the Department of the Interior, and the State of Louisiana through the Louisiana Department of Environmental Quality, the Louisiana Department of Wildlife and Fisheries, and the Louisiana Department of Natural Resources. Under the terms of the Decree, Conoco agrees to implement and fund a restoration-based settlement as compensation for natural resource damages suffered as a result of a March, 1994 release of 1,2 dichloroethane (''EDC'') from Conoco's facility in Westlake, Louisiana. The claim being settled arose under Section 107 of the Comprehensive Environmental Response, Compensation, and Liability Act, 42 U.S.C. 9607.

Contemporaneously with lodging the Consent Decree, the United States and the State of Louisiana jointly filed a complaint alleging that Conoco is an owner or operator of the facility that released the EDC within the meaning of sections 107(a)(1) and 107(a)(2) of the Comprehensive Environmental Response, Compensation, and Liability Act (''CERCLA''), 42 U.S.C. 9607(a)(1) and 9607(a)(2).

The Department of Justice will receive, for a period of thirty (30) days from the date of this publication, comments relating to the proposed Consent Decree. Comments should be addressed to the Assistant Attorney General for the Environment and Natural Resources Division, Department of Justice, Washington, DC 20530, and should refer to C.A. 97–0445. *United States* v. *Conoco,* DOJ Reference Number 90–11–3–1655.

The proposed Consent Decree may be examined at the Consent Decree Library, 1120 G Street, NW., 4th Floor, Washington, DC 20005, (202) 624–0892. A copy of the proposed Consent Decree may be obtained in person or by mail from the Consent Decree Library, 1120 G Street, NW., 4th Floor, Washington, DC 20005. In requesting a copy please refer to the referenced case and enclose a check in the amount of $21.75 (25 cents per page reproduction costs), payable to the Consent Decree Library.

Joel Gross,

Section Chief, Environmental Enforcement Section, Environment and Natural Resources Division.

[FR Doc. 97–8927 Filed 4–7–97; 8:45 am]

BILLING CODE 4410–15–M

DEPARTMENT OF JUSTICE

Notice of Lodging of Consent Decree Pursuant to the Clean Water Act

In accordance with Departmental policy, 28 CFR 50.7, notice is hereby given that a proposed consent decree in *United States* v. *Trident Seafoods Corporation,* Civil Action No. A 97093:Civil:HRH, was lodged on March 17, 1997 with the United States District Court for the District of Alaska. The complaint was brought under section 309 of the Clean Water Act, 33 U.S.C. 1319 for effluent limitations, environmental effects, reporting, sampling, and monitoring violations of two National Pollutant Discharge Elimination System (''NPDES'') permits in violation of section 301(a) of the Clean Water Act, 33 U.S.C. 1311(a), at Trident's Akutan Island and Sand Point seafood processing facilities in Alaska.

Under the Consent Decree Trident will pay a civil penalty of $418,150, and implement environmental pollution reduction activities. Additionally, Trident will implement a comprehensive environmental compliance management program, to include rigorous auditing procedures.

The Department of Justice will receive, for a period of thirty (30) days from the date of this publication, comments relating to the proposed consent decree. Comments should be addressed to the Assistant Attorney General for the Environment and Natural Resources Division, Department of Justice, Washington, DC 20530, and should refer to *United States* v. *Trident Seafoods Corporation,* DOJ REF. #90–5–1–1–2002B.

The proposed consent decree may be examined at the office of the United States Attorney, Federal Building and Courthouse, 222 W. 7th Avenue, #9, Room 253, Anchorage, Alaska 99513–7567; the Region X Office of the Environmental Protection Agency, 1200 Sixth Avenue, Seattle, Washington 98101; and at the Consent Decree Library, 1120 G Street, NW., 4th Floor, Washington, DC 20005, (202) 624–0892. A copy of the proposed consent decree may be obtained in person or by mail from the Consent Decree Library, 1120 G Street, NW., 4th Floor, Washington, DC 20005. In requesting a copy please refer to the reference case and enclose a check in the amount of $8.00 (25 cents per page reproduction costs), payable to the Consent Decree Library.

Joel M. Gross,

Chief, Environmental Enforcement Section, Environment and Natural Resources Division.

[FR Doc. 97–8928 Filed 4–7–97; 8:45 am]

BILLING CODE 4410–15–M

DEPARTMENT OF JUSTICE

Notice of Lodging of Consent Decree Pursuant to the Comprehensive Environmental Response Compensation and Liability Act of 1980 as Amended

In accordance with Department of Justice policy, 28 CFR 50.7, notice is hereby given that a proposed consent decree in *United States* v. *Western Publishing Company, Inc., et al.,* 94–CV–1247 (LEK/DNH), was lodged on March 7, 1997, with the United States District Court for the Northern District of New York. The decree resolves claims of the United States against defendant Golden Books Publishing Co., Inc. (formerly known as Western Publishing Co., Inc.) in the above-referenced action under the Comprehensive Environmental Response, Compensation, and Liability Act (''CERCLA'') in connection with the Hertel Landfill Superfund Site in the Town of Plattekill, Ulster County, New York (the ''Site''). In the proposed consent decree, the defendant agrees to pay the United States $625,000 in settlement of the United States' claims for civil penalties and punitive damages for Golden Books' failure or refusal to comply with a unilateral administrative order issued to it by the U.S. Environmental Protection Agency pursuant to section 106 of CERCLA, 42 U.S.C. 9606.

The Department of Justice will receive, for a period of thirty (30) days from the date of this publication, comments relating to the proposed consent decree. Comments should be addressed to the Assistant Attorney General for the Environment and Natural Resources Division, Department of Justice, Washington, DC 20530, and should refer to *United States* v. *Western Publishing Company, Inc., et al.,* DOJ Ref. Number 90–11–2–767A.

The proposed consent decree may be examined at the Office of the United States Attorney, United States Courthouse, 445 Broadway, Albany, NY 12207; the Region II Office of the Environmental Protection Agency, 290 Broadway, New York, NY 10278; and the Consent Decree Library, 1120 G Street, NW., 4th Floor, Washington, D.C. 20005, (202) 624–0892. A copy of the proposed consent decree may be obtained in person or by mail from the Consent Decree Library, 1120 G Street, NW, 4th Floor, Washington, DC 20005. In requesting a copy, please refer to the referenced case and enclose a check in the amount of $5.25 (25 cents per page reproduction costs), payable to the Consent Decree Library.

Joel M. Gross,

Section Chief, Environmental Enforcement Section, Environment and Natural Resources Division.

[FR Doc. 97–8926 Filed 4–7–97; 8:45 am]

BILLING CODE 4410–01–M

DEPARTMENT OF JUSTICE

Drug Enforcement Administration

Nathaniel Aikens-Afful, M.D.; Revocation of Registration

On August 1, 1996, the Deputy Assistant Administrator, Office of Diversion Control, Drug Enforcement Administration (DEA) issued an Order to Show Cause to Nathaniel Aikens-Afful, M.D., of Randallstown, Maryland, notifying him of an opportunity to show cause as to why DEA should not revoke his DEA Certificate of Registration, AA2585721, under 21 U.S.C. 824(a)(2), (a)(3), and (a)(4), and deny any pending applications for registration pursuant to 21 U.S.C. 823(f), for reason that he was convicted of a felony offense relating to controlled substances, he is not authorized to handle controlled substances in the State of Maryland, and his continued registration would be inconsistent with the public interest. The order also notified Dr. Aikens-Afful that should no request for a hearing be filed within 30 days, his hearing right would be deemed waived.

The DEA received a signed receipt indicating that Dr. Aikens-Afful received the order on August 5, 1996. No request for a hearing or any other reply was received by the DEA from Dr. Aikens-Afful or anyone purporting to represent him in this matter. Therefore, the Acting Deputy Administrator, finding that (1) 30 days have passed since the receipt of the Order to Show Cause, and (2) no request for a hearing having been received, concludes that Dr. Aikens-Afful is deemed to have waived his hearing right. After considering the relevant material from the investigative file in this matter, the Acting Deputy Administrator now enters his final order without a hearing pursuant to 21 CFR 1301.54(e) and 1301.57.

The Acting Deputy Administrator finds that on November 16, 1994, the Maryland State Board of Physician Quality Assurance (Board) issued an Order for Summary Suspension of License to Practice Medicine. The Board found that Dr. Aikens-Afful wrote prescriptions for Percocet and Roxicet, both Schedule II controlled substances, for individuals for no legitimate medical purpose, and often in names of individuals that he never saw. The Board found that Dr. Aikens-Afful would write these prescriptions for friends and associates who would have the prescriptions filled, sell the pills, and then provide Dr. Aikens-Afful with some of the proceeds from these illegal sales.

There is no evidence in the record that Dr. Aikens-Afful's license to practice medicine in the State of Maryland has been reinstated. Therefore, the Acting Deputy Administrator finds that since Dr. Aikens-Afful is not currently authorized to practice medicine in the State of Maryland, it is reasonable to infer that he is not authorized to handle controlled substances in that state.

The DEA does not have statutory authority under the Controlled Substances Act to issue or maintain a registration if the applicant or registrant is without state authority to handle controlled substances in the state in which he conducts his business. 21 U.S.C. 802(21), 823(f) and 824(a)(3). This prerequisite has been consistently upheld. See Dominick A. Ricci, M.D., 58 FR 51,104 (1993); James H. Nickens, M.D., 57 FR 59,847 (1992); Roy E. Hardman, M.D., 57 FR 49,195 (1992).

Here, it is clear that Dr. Aikens-Afful is not currently authorized to handle controlled substances in the State of Maryland, where he is registered with DEA. Therefore, he is not entitled to maintain that registration. Because Dr. Aikens-Afful is not entitled to a DEA registration in Maryland due to his lack of state authorization to handle controlled substances, the Acting Deputy Administrator concludes that it is unnecessary to address whether Dr. Aikens-Afful's registration should be revoked based upon the other grounds asserted in the Order to Show Cause.

Accordingly, the Acting Deputy Administrator of the Drug Enforcement Administration, pursuant to the authority vested in him by 21 U.S.C. 823 and 824 and 28 CFR 0.100(b) and 0.104, hereby orders that DEA Certificate of Registration, AA2585721, previously issued to Nathaniel Aikens-Afful, M.D., be, and it hereby is, revoked. The Acting Deputy Administrator further orders that any pending applications for the renewal of such registration, be, and they hereby are, denied. This order is effective May 8, 1997.

Dated: April 1, 1997.

James S. Milford,

Acting Deputy Administrator.

[FR Doc. 97–8945 Filed 4–7–97; 8:45 am]

BILLING CODE 4410–09–M

DEPARTMENT OF JUSTICE

Drug Enforcement Administration

James D. Okun, M.D.; Revocation of Registration

On August 6, 1996, the Deputy Assistant Administrator, Office of Diversion Control, Drug Enforcement Administration (DEA) issued an Order to Show Cause to James D. Okun, M.D., notifying him of an opportunity to show cause as to why DEA should not revoke his DEA Certificate of Registration, BO1821354, and deny any pending applications for registration pursuant to 21 U.S.C. 823(f) and 824(a)(3), for reason that he is not currently authorized to handle controlled substances in the State of Louisiana, where he is registered with DEA. The order also notified Dr. Okun that should no request for a hearing be filed within 30 days, his hearing right would be deemed waived.

The DEA mailed the show cause order to Dr. Okun at his registered address in Louisiana and at his residence in California. Subsequently, the DEA received a signed, but undated, receipt showing that Dr. Okun received the order sent to California. Government counsel asserts that more than 30 days have passed since the signed return receipt was received by the DEA. No request for a hearing or any other reply was received by the DEA from Dr. Okun or anyone purporting to represent him in this matter. Therefore, the Acting Deputy Administrator, finding that (1) 30 days have passed since the receipt of the Order to Show Cause, and (2) no request for a hearing having been received, concludes that Dr. Okun is deemed to have waived his hearing right. After considering relevant material from the investigative file in this matter, the Acting Deputy Administrator now enters his final order without a hearing pursuant to 21 CFR 1301.54(e) and 1301.57

The Acting Deputy Administrator finds that on July 29, 1995, the Louisiana State Board of Medical Examiners (Board) issued an Opinion and Ruling regarding Dr. Okun's license to practice medicine. The Board found that Dr. Okun had entered a plea of *nolo contendere* to a charge of assault with a dangerous weapon—an automobile; had answered untruthfully a question on his 1992 license renewal application as to whether he had been charged with a violation of any statute; and had run an advertisement in a newspaper which contained false, fraudulent or misleading representations. It was the Board's opinion that in order to determine the appropriate sanction against his medical license, Dr. Okun should be evaluated by a psychiatrist and then he should personally appear before the Board. The Board ordered that if Dr. Okun did not comply with these requirements within 60 days of the Board's Opinion and Ruling, his medical license would be suspended until he does comply. By letter dated October 27, 1995, the Board advised DEA that Dr. Okun's license to practice medicine was suspended effective September 27, 1995.

The Acting Deputy Administrator finds that there is no indication that Dr. Okun has complied with the Board's requirements and therefore, his medical license remains suspended. The Acting Deputy Administrator concludes that it is reasonable to infer that since Dr. Okun is not currently licensed to practice medicine in Louisiana, he is also not authorized to handle controlled substances in that state.

The DEA does not have statutory authority under the Controlled Substances Act to issue or maintain a registration if the applicant or registrant is without state authority to handle controlled substances in the state in which he conducts his business. 21 U.S.C. 802(21), 823(f) and 824(a)(3). This prerequisite has been consistently upheld. See Dominick A. Ricci, M.D., 58 FR 51,104 (1993); James H. Nickens, M.D., 57 FR 59,847 (1992); Roy E. Hardman, M.D., 57 FR 49,195 (1992).

Here, it is clear that Dr. Okun is not currently authorized to handle controlled substances in the State of Louisiana. Consequently, he is not entitled to a DEA registration in that state. While it appears that Dr. Okun is currently living in California, he has not submitted a request to modify his registration to that state. Therefore, the DEA registration issued to him in Louisiana must be revoked.

Accordingly, the Acting Deputy Administrator of the Drug Enforcement Administration, pursuant to the authority vested in him by 21 U.S.C. 823 and 824 and 28 CFR 0.100(b) and 0.104, hereby orders that DEA Certificate of Registration, BO1821354, previously issued to James D. Okun, M.D., be, and it hereby is, revoked. The Acting Deputy Administrator further orders that any pending requests for renewal of such registration, be, and they hereby are, denied. This order is effective May 8, 1997.

Dated: April 1, 1997.

James S. Milford,

Acting Deputy Administrator.

[FR Doc. 97–8944 Filed 4–7–97; 8:45 am]

BILLING CODE 4410–09–M

DEPARTMENT OF JUSTICE

Drug Enforcement Administration

Raymond S. Sanders, D.P.M.; Revocation of Registration

On June 18, 1996, the Deputy Assistant Administrator, Office of Diversion Control, Drug Enforcement Administration (DEA), issued an Order to Show Cause to Raymond S. Sanders, D.P.M., of Sacramento, California, notifying him of an opportunity to show cause as to why DEA should not revoke his DEA Certificate of Registration, AS8739572, under 21 U.S.C. 824(a)(3) and 824(a)(4), and deny any pending applications for registration as a practitioner pursuant to 21 U.S.C. 823(f), for reason that he is not currently authorized to handle controlled substances in the State of California and his continued registration would be inconsistent with the public interest. The order also notified Dr. Sanders that should no request for a hearing be filed within 30 days, his hearing right would be deemed waived.

The DEA received a signed receipt indicating that the order was received by Dr. Sanders on July 1, 1996. No request for a hearing or any other reply was received by the DEA from Dr. Sanders or anyone purporting to represent him in this matter. Therefore, the Acting Deputy Administrator, finding that (1) 30 days have passed since the receipt of the Order to Show Cause, and (2) no request for a hearing having been received, concludes that Dr. Sanders is deemed to have waived his hearing right. After considering the relevant material from the investigative file in this matter, the Acting Deputy Administrator now enters his final order without a hearing pursuant to 21 CFR 1301.54(e) and 1301.57.

The Acting Deputy Administrator finds that on April 15, 1996, the Office of Administrative Hearings, State of California, issued an interim suspension order suspending Dr. Sanders from practicing podiatric medicine. Thereafter, on April 29, 1996, the Board of Podiatric Medicine for the State of California (Board) filed an Accusation charging, in part, that Dr. Sanders engaged in unprofessional conduct by prescribing, dispensing or furnishing dangerous drugs to himself and his wife without medical indication. The Accusation proposed the revocation of Dr. Sanders' podiatric medicine license. On June 19, 1996, the Board entered a Default Decision revoking Dr. Sanders' podiatric medicine license effective July 19, 1996. The Acting Deputy Administrator finds that in light of the fact that Dr. Sanders is not currently licensed to practice podiatric medicine in the State of California, it is reasonable to infer that he is not currently authorized to handle controlled substances in that state.

The DEA does not have statutory authority under the Controlled Substances Act to issue or maintain a registration if the applicant or registrant is without state authority to handle controlled substances in the state in which he conducts his business. 21 U.S.C. 802(21), 823(f) and 824(a)(3). This prerequisite has been consistently upheld. See Dominick A. Ricci, M.D., 58 FR 51,104 (1993); James H. Nickens, M.D., 57 FR 59,847 (1992); Roy E. Hardman, M.D., 57 FR 49,195 (1992).

Here, it is clear that Dr. Sanders is not currently authorized to handle controlled substances in the State of California. Therefore, Dr. Sanders is not entitled to a DEA registration. Because Dr. Sanders is not entitled to a DEA registration due to his lack of state authorization to handle controlled substances, the Acting Deputy Administrator concludes that it is unnecessary to address whether Dr. Sanders' continued registration would be inconsistent with the public interest as alleged in the Order to Show Cause.

Accordingly, the Acting Deputy Administrator of the Drug Enforcement Administration pursuant to the authority vested in him by 21 U.S.C. 823 and 824 and 28 CFR 0.100(b) and 0.104, hereby orders that DEA Certificate of Registration, AS8739572, previously issued to Raymond S. Sanders, D.P.M., be, and it hereby is, revoked. The Acting Deputy Administrator further orders that any pending applications for registration, be, and they hereby are, denied. This order is effective May 8, 1997.

Dated: April 1, 1997.

James S. Milford,

Acting Deputy Administrator.

[FR Doc. 97–8946 Filed 4–7–97; 8:45 am]

BILLING CODE 4410–09–M

DEPARTMENT OF JUSTICE

National Institute of Justice

[OJP (NIJ) No. 1120]

RIN 1121–ZA67

National Institute of Justice Solicitation for Investigator-Initiated Research

AGENCY: Office of Justice Programs, National Institute of Justice, Justice.

ACTION: Notice of solicitation.

SUMMARY: Announcement of the availability of the National Institute of Justice ''Solicitation for Investigator-Initiated Research.''

ADDRESSES: Proposals should be mailed to the National Institute of Justice, 633 Indiana Avenue, NW., Washington, DC 20531.

DATES: There are two deadlines for receipt of proposals, June 17, 1997 and December 16, 1997.

FOR FURTHER INFORMATION CONTACT: For general information about application procedures for solicitations, please call the U.S. Department of Justice Response Center 1–800–421–6771.

SUPPLEMENTARY INFORMATION:

Authority

This action is authorized under the Omnibus Crime Control and Safe Streets Act of 1968, secs. 201–03, as amended, 42 U.S.C. 3721–23 (1994).

Background

The National Institute of Justice is soliciting proposals that respond to the broad mandate of the Institute's solicitation for investigator-initiated research. Applicants may submit proposals to explore topics relevant to State or local criminal justice practice or policy. Some of the current themes of interest to the Institute include: Rethinking justice to meet the challenges of the 21st century; understanding the nexus between crime and social problems; breaking the cycle of offender recidivism and other reoccurring criminal justice problems; developing new technologies, practices, and techniques for use in the criminal justice system; expanding the horizons of criminal justice by looking beyond traditional crime definitions and into new possibilities of study such as transnational and cybercrimes. These topics represent a broad vision of directions that the Institute intends to pursue in the next few years. Researchers may relate their proposals to these topics or develop projects that fall outside of these themes on the condition that the proposed research falls within NIJ's statutory mission. Interested organizations should call the National Criminal Justice Reference Service (NCJRS) at 1–800–851–3420 to obtain a copy of ''Solicitation for Investigator-Initiated Research'' (refer to document no. SL000201). The solicitation is available electronically via the NCJRS Bulletin Board, which can be accessed via the Internet. Telnet to ncjrsbbs.ncjrs.org, or gopher to ncjrs.org:71. For World Wide Web access, connect to the NCJRS Justice Information Center at http://www.ncjrs.org. Those without Internet access can dial the NCJRS Bulletin Board via modem: dial 301–738–8895. Set the modem at 9600 baud, 8–N–1.

Dated: April 2, 1997.

Jeremy Travis,

Director, National Institute of Justice.

[FR Doc. 97–8911 Filed 4–7–97; 8:45 am]

BILLING CODE 4410–18–P

DEPARTMENT OF LABOR

Occupational Safety and Health Administration

Maryland State Standards; Approval

1. Background

Part 1953 of Title 29, Code of Federal Regulations, prescribes procedures under section 18 of the Occupational Safety and Health Act of 1970 (hereinafter called the Act) by which the Regional Administrator for Occupational Safety and Health (hereinafter called the Regional Administrator), under a delegation of authority from the Assistant Secretary of Labor for Occupational Safety and Health (hereinafter called the Assistant Secretary) (29 CFR 1593.4), will review and approve standards promulgated pursuant to a State plan which has been approved in accordance with section 18(c) of the Act and 29 CFR part 1902. On July 5, 1973, notice was published in the **Federal Register** (38 FR 17834) of the approval of the Maryland State plan and the adoption of subpart O to part 1952 containing the decision.

The Maryland State plan provides for the adoption of all Federal standards as State standards after comments and public hearing. Section 1952.210 of subpart O sets forth the State's schedule for the adoption of Federal standards. By letters dated (1) August 28, 1995; (2) February 15, 1996; (3) February 23, 1996; (4) February 28, 1996; (5 and 6) August 23, 1996; (7 and 8) January 6, 1997; and (9 and 10) February 13, 1997 from John P. O'Connor, Commissioner of the Maryland Division of Labor and Industry, to Linda R. Anku, Regional Administrator, and incorporated as part of the plan, the State submitted State standards identical to amendments, corrections, and revisions to: (1) 29 CFR 1910.1011 and 1910.1000, pertaining to the Occupational Exposure to Asbestos Standard, as published in the **Federal Register** of February 21, 1995 (60 FR 9624), June 28, 1995 (60 FR 33344), June 29, 1995 (60 FR 33984), July 13, 1995 (60 FR 36043) and September 29, 1995 (60 FR 50411); (2) 29 CFR part 1926, subpart E, and 29 CFR 1926.500, pertaining to the Safety Standards for Fall Protection in the Construction Industry, as published in the **Federal Register** of August 2, 1995 (60 FR 39255); (3) 29 CFR 1910.266, Safety Standards for Logging Operations, as published in the **Federal Register** of September 8, 1995 (60 FR 47035); (4) 29 CFR 1910.1025, pertaining to the Occupational Exposure to Lead Standard for General Industry, as published in the **Federal Register** of October 11, 1995 (60 FR 52858); (5) 29 CFR 1910, 1926 and 1928, pertaining to Miscellaneous Minor and Technical Amendments to OSHA Standards, as published in the **Federal Register** of March 7, 1996 (61 FR 9230); (6) 29 CFR 1910.272, pertaining to Grain Handling Facilities, as published in the **Federal Register** of March 8, 1996 (61 FR 9583); (7) 29 CFR 1910.133, 1910.135 and 1910.136, pertaining to Personal Protective Equipment for General Industry, as published in the **Federal Register** of May 2, 1996 (61 FR 19548) and May 9, 1996 (61 FR 21228); (8) 29 CFR 1910 and 1926, pertaining to Consolidation of Repetitive Provisions: Technical Amendments, as published in the **Federal Register** of July 3, 1996 (61 FR 31429); (9) 29 CFR 1926.1101 and 1910.1001, pertaining to Occupational Exposure to Asbestos, as published in the **Federal Register** of August 23, 1996 (61 FR 43456); and (10) 29 CFR 1926.416 and 1926.417, pertaining to General Industry Standards Applicable to Construction Work, as published in the **Federal Register** of August 12, 1996 (61 FR 41738).

These standards are contained in COMAR 09.12.31. Maryland Occupational Safety and Health Standards were promulgated after public hearings on (1) March 1, 1995; (2)

September 6, 1995; (3) October 5, 1995; (4) November 1, 1995; (5 and 6) April 3, 1996; (7 and 8) July 3, 1996; and (9 and 10) September 13, 1996. These standards became effective on (1) August 14, 1995; (2) January 15, 1996; (3) February 12, 1996; (4) February 26, 1996; (5 and 6) July 29, 1996; (7 and 8) October 21, 1996; and (9 and 10) January 27, 1997 respectively.

2. Decision

Having reviewed the State submissions in comparison with the Federal standards, it has been determined that the State standards are identical to the Federal standards and, accordingly, are approved.

3. Location of the Supplements for Inspection and Copying

A copy of the standards supplements, along with the approved plan, may be inspected and copied during normal business hours at the following locations: Office of the Regional Administrator, 3535 Market Street, Suite 2100, Philadelphia, Pennsylvania 19104; Office of the Commissioner of Labor and Industry, 501 St. Paul Place, Baltimore, Maryland 21202, and the OSHA Office of State Programs, U.S. Department of Labor, Room N3700, 3rd Street and Constitution Avenue NW., Washington, DC 20210.

4. Public Participation

Under 29 CFR 1953.2(c), the Assistant Secretary may prescribe alternative procedures to expedite the review process or for other good cause which may be consistent with applicable laws. The Assistant Secretary finds that good cause exists for not publishing the supplement to the Maryland State plan as a proposed change and making the Regional Administrator's approval effective upon publication for the following reasons:

a. The standards are identical to the Federal standards which were promulgated in accordance with Federal law including meeting requirements for public participation.

b. The standards were adopted in accordance with the procedural requirements of State law and further participation would be unnecessary.

This decision is effective April 8, 1997.

(Sec. 18, Pub. L. 91–596, 84 Stat. 1608 (29 U.S.C. 667))

Signed at Philadelphia, Pennsylvania, this 6th day of March 1997.

Linda R. Anku,

Regional Administrator.

[FR Doc. 97–8938 Filed 4–7–97; 8:45 am]

BILLING CODE 4510–26–P

NATIONAL AERONAUTICS AND SPACE ADMINISTRATION

[Notice (97–039)]

Notice of Prospective Patent License

AGENCY: National Aeronautics and Space Administration.

ACTION: Notice of prospective patent license.

SUMMARY: NASA hereby gives notice that L'Garde, Inc., of Tusin, California 92680–6487, has applied for an exclusive license to practice the invention described in U.S. Patent No. 5,401,069 entitled ''Inflatable Rescue Device,'' which is assigned to the United States of America as represented by the Administrator of the National Aeronautics and Space Administration. Written objections to the prospective grant of a license should be sent to Johnson Space Center.

DATES: Responses to this notice must be received by June 9, 1997.

FOR FURTHER INFORMATION CONTACT:

Hardie R. Barr, Patent Attorney, Johnson Space Center, Mail Code HA, Houston, TX 77058–3696, telephone (281) 483–1003.

Dated: March 31, 1997.

Edward A. Frankle,

General Counsel.

[FR Doc. 97–8860 Filed 4–7–97; 8:45 am]

BILLING CODE 7510–01–M

NATIONAL ARCHIVES AND RECORDS ADMINISTRATION

Advisory Committee on Presidential Libraries Meeting

Notice is hereby given that the Advisory Committee on Presidential Libraries will meet on Wednesday, May 7, 1997, from 9 a.m. to 12 noon, in room 105 of the National Archives building, 700 Pennsylvania Ave., NW, Washington, DC.

The agenda for the meeting will be the Presidential library programs and a discussion of future Presidential libraries.

The meeting will be open to the public. For further information, call David F. Peterson at (301) 713–6050.

Dated: April 2, 1997.

Mary Ann Hadyka,

Committee Management Officer.

[FR Doc. 97–8947 Filed 4–7–97; 8:45 am]

BILLING CODE 7515–01–P

NUCLEAR REGULATORY COMMISSION

Agency Information Collection Activities: Submission for OMB Review; Comment Request

AGENCY: U.S. Nuclear Regulatory Commission (NRC).

ACTION: Notice of the OMB review of information collection and solicitation of public comment.

SUMMARY: The NRC has recently submitted to OMB for review the following proposal for the collection of information under the provisions of the Paperwork Reduction Act of 1995 (44 U.S.C. Chapter 35). The NRC hereby informs potential respondents that an agency may not conduct or sponsor, and that a person is not required to respond to, a collection of information unless it displays a currently valid OMB control number.

1. Type of submission, new, revision, or extension: Revision.

2. The title of the information collection: 10 CFR Part 110—Rules and Regulations for the Export and Import of Nuclear Equipment and Material.

3. The form number if applicable: Not applicable.

4. How often the collection is required: On occasion.

5. Who will be required or asked to report: Any person in the U.S. who wishes to export or import nuclear material and equipment subject to the requirements of 10 CFR 110 or to export incidental radioactive material that is a contaminant of shipments of more than 100 kilograms of non-waste material using existing NRC general licenses.

6. An estimate of the number of responses: 100.

7. The estimated number of annual recordkeeping respondents: 125.

8. An estimate of the total number of hours needed annually to complete the requirement or request: 130 hours (1.3 hours per response); recordkeeping, 150 hours (1.2 hours per respondent).

9. An indication of whether Section 3507(d), Pub. L. 104–13 applies: Not applicable.

10. Abstract: 10 CFR 110 provides application, reporting, and recordkeeping requirements for exports and imports of nuclear material and equipment subject to the requirements of a specific license or a general license and exports of incidental radioactive material. The information collected and maintained pursuant to 10 CFR 110 enables the NRC to authorize only imports and exports which are not inimical to U.S. common defense and security and which meet applicable

statutory, regulatory, and policy requirements.

A copy of the submittal may be viewed free of charge at the NRC Public Document Room, 2120 L Street, NW (Lower Level), Washington, DC. Members of the public who are in the Washington, DC, area can access the submittal via modem on the Public Document Room Bulletin Board (NRC's Advanced Copy Document Library) NRC subsystem at FedWorld, 703–321–3339. Members of the public who are located outside of the Washington, DC, area can dial FedWorld, 1–800–303–9672, or use the FedWorld Internet address: fedworld.gov (Telnet). The document will be available on the bulletin board for 30 days after the signature date of this notice. If assistance is needed in accessing the document, please contact the FedWorld help desk at 703–487–4608. Additional assistance in locating the document is available from the NRC Public Document Room, nationally at 1–800–397–4209, or within the Washington, DC, area at 202–634–3273.

Comments and questions should be directed to the OMB reviewer by May 8, 1997: Edward Michlovich, Office of Information and Regulatory Affairs (3150–0036), NEOB–10202, Office of Management and Budget, Washington, DC 20503.

Comments can also be submitted by telephone at (202) 395–3084.

The NRC Clearance Officer is Brenda Jo. Shelton, (301) 415–7233.

Dated at Rockville, Maryland, this second day of April 1997.

For the Nuclear Regulatory Commission.

Gerald F. Cranford,

Designated Senior Official for Information Resources Management.

[FR Doc. 97–8914 Filed 4–7–97; 8:45 am]

BILLING CODE 7590–01–P

NUCLEAR REGULATORY COMMISSION

Sunshine Act Meeting

AGENCY HOLDING THE MEETING: Nuclear Regulatory Commission.

DATE: Weeks of April 7, 14, 21, and 28, 1997.

PLACE: Commissioners' Conference Room, 11555 Rockville Pike, Rockville, Maryland.

STATUS: Public and Closed.

MATTERS TO BE CONSIDERED:

Week of April 7

Wednesday, April 9

11:30 a.m. Affirmation Session (PUBLIC MEETING) (if needed)

Week of April 14—Tentative

There are no meetings scheduled for the Week of April 14.

Week of April 21—Tentative

Wednesday, April 23

10:00 a.m. Briefing on Millstone (PUBLIC MEETING) (Contact: Gene Imbro, 301–415–1490)

11:30 a.m. Affirmation Session (PUBLIC MEETING) (if needed)

1:30 p.m. Briefing on Electric Grid Reliability (PUBLIC MEETING) (Contact: Ernie Rossi, 301–415–7499)

Thursday, April 24

9:00 a.m. Briefing on Electric Utility Restructuring (PUBLIC MEETING) (Contact: Bob Wood, 301–415–1255)

1:30 p.m. Briefing on Staff Response to Arthur Andersen Study Recommendations (PUBLIC MEETING) (Contact: Rich Barrett, 301–415–7482)

Friday, April 25

10:00 a.m. Meeting with Commonwealth Edison on Response to 10 CFR 50.54 (F) Letter (PUBLIC MEETING) (Contact: Bob Capra, 301–415–1395)

Week of April 28—Tentative

Friday, May 2

9:00 a.m. Meeting with Advisory Committee on Reactor Safeguards (ACRS) (PUBLIC MEETING) (Contact: John Larkins, 301–415–7360)

10:30 a.m. Meeting with Nuclear Safety Research Review Committee (NSRRC) (PUBLIC MEETING) (Contact: Jose Cortez, 301–415–6596)

Noon Affirmation Session (PUBLIC MEETING) (if needed)

The schedule for commission meetings is subject to change on short notice. To verify the status of meetings call (recording)—(301) 415–1292. Contact person for more information: Bill Hill (301) 415–1661.

The NRC Commission Meeting Schedule can be found on the Internet at: http://www.nrc.gov/SECY/smj/schedule.htm

This notice is distributed by mail to several hundred subscribers; if you no longer wish to receive it, or would like to be added to it, please contact the Office of the Secretary, Attn: Operations Branch, Washington, DC 20555 (301–415–1661).

In addition, distribution of this meeting notice over the internet system is available. If you are interested in receiving this Commission meeting schedule electronically, please send an electronic message to wmh@nrc.gov or dkw@nrc.gov.

Dated: April 4, 1997.

William M. Hill, Jr.,

SECY Tracking Officer, Office of the Secretary.

[FR Doc. 97–9125 Filed 4–4–97; 2:14 pm]

BILLING CODE 7590–01–M

POSTAL RATE COMMISSION

[Order No. 1168, Docket No. A97–17]

Russell Springs, Kansas 67755 (Joe Darnall, Petitioner); Notice and Order Accepting Appeal and Establishing Procedural Schedule Under 39 U.S.C. § 404(b)(5)

Issued April 2, 1997.

Before Commissioners: Edward J. Gleiman, Chairman; H. Edward Quick, Jr., Vice-Chairman; George W. Haley; W.H. ''Trey'' LeBlanc III.

Docket Number: A97–17.

Name of Affected Post Office: Russell Springs, Kansas 67755.

Name(s) of Petitioner(s): Joe Darnall.

Type of Determination: Closing.

Date of Filing of Appeal Papers: March 31, 1997.

Categories of Issues Apparently Raised

1. Effect on the community (39 U.S.C. § 404(b)(2)(A)).

2. Effect on postal services (39 U.S.C. § 404(b)(2)(C)).

After the Postal Service files the administrative record and the Commission reviews it, the Commission may find that there are more legal issues than those set forth above. Or, the Commission may find that the Postal Service's determination disposes of one or more of those issues.

The Postal Reorganization Act requires that the Commission issue its decision within 120 days from the date this appeal was filed (39 U.S.C. 404 (b)(5)). In the interest of expedition, in light of the 120-day decision schedule, the Commission may request the Postal Service to submit memoranda of law on any appropriate issue. If requested, such memoranda will be due 20 days from the issuance of the request and the Postal Service shall serve a copy of its memoranda on the petitioners. The Postal Service may incorporate by reference in its briefs or motions, any arguments presented in memoranda it previously filed in this docket. If necessary, the Commission also may ask petitioners or the Postal Service for more information.

The Commission Orders

(a) The Postal Service shall file the record in this appeal by April 15, 1997.

(b) The Secretary of the Postal Rate Commission shall publish this Notice and Order and Procedural Schedule in the **Federal Register**.

By the Commission.

Margaret P. Crenshaw,

Secretary.

Appendix

March 31, 1997
Filing of Appeal letter
April 2, 1997
Commission Notice and Order of Filing of Appeal
April 25, 1997
Last day of filing of petitions to intervene (see 39 CFR 3001.111(b))
May 5, 1997
Petitioner's Participant Statement or Initial Brief (see 39 CFR 3001.115 (a) and (b))
May 27, 1997
Postal Service's Answering Brief (see 39 CFR 3001.115(c))
June 11, 1997
Petitioner's Reply Brief should Petitioner choose to file one (see 39 CFR 3001.115(d))
June 18, 1997
Deadline for motions by any party requesting oral argument. The Commission will schedule oral argument only when it is a necessary addition to the written filings (see 39 CFR 3001.116)
July 29, 1997
Expiration of the Commission's 120-day decisional schedule (see 39 U.S.C. § 404(b)(5))

[FR Doc. 97–8918 Filed 4–7–97; 8:45 am]

BILLING CODE 7710–FW–P

THE PRESIDENT'S COUNCIL ON SUSTAINABLE DEVELOPMENT

The Fourteenth Meeting of the President's Council on Sustainable Development (PCSD) in Washington, D.C.

Summary: The President's Council on Sustainable Development (PCSD), a partnership of industry, government, and environmental, labor, and Native American organizations, will convene its fourteenth meeting in Washington, D.C. on Tuesday, April 29, 1997. The Council transmitted its report, entitled Sustainable America: A New Consensus for Prosperity, Opportunity, and a Healthy Environment for the Future, to President Clinton on March 7, 1996. The text of the Council's report can be found on the Internet at http://www.whitehouse.gov/PCSD or by calling 1–800–363–3732. The Council met on December 11, 1996 to approve its progress report on implementation efforts undertaken on behalf of the recommendations contained in Sustainable America. The Council transmitted this report to the President in January, 1997. Copies of the report, Building on Consensus: A Progress Report on Sustainable America, can be received by calling 1–800–363–3732.

At the upcoming meeting, the Council will discuss the next phase of it's implementation efforts.

The agenda will include:

I. A presentation of President Clinton's directive to the Council
II. Updates on recent activities
III. Discussion PCSD organization to implement the presidential directive
IV. Public comment period: Council will seek public comment on potential Council activities to implement the presidential directive.

Dates/Times: Tuesday, April 29, 1997 from 11 am to 1 pm.

Place: The Ballroom at The Hotel Washington, Pennsylvania Avenue at 15th Street, NW, Washington, D.C. 20004; 202/638–5900.

Status: Open to the Public: Public comments are welcome. Comments may be submitted orally on April 29 or in writing any time prior to or during the April 29 meeting. Please submit written comments prior to meeting to: PCSD, Public Comments, 730 Jackson Place, N.W., Washington, D.C. 20503, or fax to: 202/408–6839.

Contact: Patricia Sinicropi, Administrative Officer, 202/408–5296.

Sign Language interpreter: Please call the contact if you will need a sign language interpreter.

Martin A. Spitzer,

Executive Director, President's Council on Sustainable Development.

[FR Doc. 97–8959 Filed 4–7–97; 8:45 am]

BILLING CODE 3125–01–P

PRESIDENTIAL ADVISORY COMMITTEE ON GULF WAR VETERANS' ILLNESSES

Meeting

AGENCY: Presidential Advisory Committee on Gulf War Veterans' Illnesses.

ACTION: Notice of open meeting.

SUMMARY: This notice is hereby given to announce an open meeting of a panel of the Presidential Advisory Committee on Gulf War Veterans' Illnesses. The panel will discuss several issues relevant to the Committee's charter and will receive comment from members of the public. Dr. Joyce C. Lashof will chair this panel meeting.

DATES: May 7, 1997, 8:30 a.m.–3:30 p.m.

PLACE: The Mills House Hotel, 115 Meeting Street, Charleston, SC 29401.

SUPPLEMENTARY INFORMATION: The President established the Presidential Advisory Committee on Gulf War Veterans' Illnesses by Executive Order 12961, May 26, 1995, and extended its tenure by Executive Order 13034, January 30, 1997. The purpose of this Committee is to review and provide recommendations on the government's investigation of possible chemical and biological weapons exposure incidents during the Gulf War and on implementation of the Committee's prior recommendations. The Committee reports to the President through the Secretary of Defense, the Secretary of Health and Human Services, and the Secretary of Veterans Affairs. The Committee members have expertise relevant to the functions of the committee and are appointed by the President from non-Federal sectors.

Tentative Agenda

Wednesday, May 7, 1997

8:30 a.m.—Call to order. Public comment
9:30 a.m.—Briefings related to chemical warfare agent exposure issues
10:45 a.m.—Break
11:00 a.m.—Briefings related to chemical warfare agent exposure issues (cont.)
12:15 p.m.—Lunch
1:30 p.m.—Briefings related to chemical warfare agent exposure issues (cont.)
2:45 p.m.—Briefings related to implementation of *Final Report* recommendations
3:20 p.m.—Committee and staff discussion: Next steps
3:30 p.m.—Meeting adjourned

A final agenda will be available at the meeting.

Public Participation

The meeting is open to the public. Members of the public who wish to make oral statements should contact the Advisory Committee at the address or telephone number listed below at least five business days prior to the meeting. Reasonable provisions will be made to include on the agenda presentations from individuals who have not yet had an opportunity to address the Advisory Committee. Priority will given to Gulf War veterans whose accounts of firsthand experience with chemical and biological warfare agent detections previously have not been conveyed to

the Committee. The panel chair is empowered to conduct the meeting in a fashion that will facilitate the orderly conduct of business. People who wish to file written statements with the Advisory Committee may do so at any time.

FOR FURTHER INFORMATION CONTACT: John D. Longbrake, Presidential Advisory Committee on Gulf War Veterans' Illnesses, 1411 K Street, N.W., suite 1000, Washington, DC 20005, Telephone: (202) 761–0066, Fax: (202) 761–0310.

Dated: April 2, 1997.

C.A. Bock,

Federal Register Liaison Officer, Presidential Advisory Committee on Gulf War Veterans' Illnesses.

[FR Doc. 97–8863 Filed 4–7–97; 8:45 am]

BILLING CODE 3610–76–M

PROSPECTIVE PAYMENT ASSESSMENT COMMISSION

Meetings

Notice is hereby given of the meetings of the Prospective Payment Assessment Commission on Tuesday and Wednesday, April 15 and 16, 1997, at the Embassy Suites Hotel, 1250 22nd Street, NW, Washington, DC, 202/857–3388.

The Full Commission will convene at 1:30 p.m., on April 15, 1997, and adjourn at approximately 5:00 p.m. On Wednesday, April 16, 1997, the meeting will convene at 9:00 a.m. and adjourn at approximately 12:15 p.m. The meetings will be held in the Ballroom (Diplomat, Consulate, and Ambassador rooms combined) each day.

All meetings are open to the public.

Donald A. Young,

Executive Director.

[Fr. Doc. 97–8854 Filed 4–7–97; 8:45 am]

BILLING CODE 6820–BW–M

RAILROAD RETIREMENT BOARD

Proposed Collection; Comment Request

SUMMARY: In accordance with the requirement of Section 3506(c)(2)(A) of the Paperwork Reduction Act of 1995 which provides opportunity for public comment on new or revised data collections, the Railroad Retirement Board (RRB) will publish periodic summaries of proposed data collections.

Comments are invited on: (a) Whether the proposed information collection is necessary for the proper performance of the functions of the agency, including whether the information has practical utility; (b) the accuracy of the RRB's estimate of the burden of the collection of the information; (c) ways to enhance the quality, utility, and clarity of the information to be collected; and (d) ways to minimize the burden related to the collection of information on respondents, including the use of automated collection techniques or other forms of information technology.

Title and purpose of information collection: Student Beneficiary Monitoring; OMB 3220–0123. Under provisions of the Railroad Retirement Act (RRA), there are two types of benefits whose payment is based upon the status of a child being a full-time student, a survivor benefit under Section 2 and an increased retirement benefit under Section 3(f)(3).

A survivor benefit is paid directly to the student unless there is a representative payee. The benefit for a student in a life case is paid by increasing the retired parent's annuity rate under the overall minimum guaranty. The requirements for obtaining benefits based on full-time student status are prescribed in 20 CFR 219.54 and 219.55.

The RRB requires evidence of full-time school attendance in order to determine that a child is entitled to student benefits. The RRB utilizes the following forms to conduct its student monitoring program. Form G–315, *Student Questionnaire,* obtains certification of a student's full-time school attendance. It also obtains information on a student's marital status, Social Security benefits, and employment which are needed to determine entitlement or continued entitlement to benefits under the RRA. Form G–315a, *Statement by School Official of Student's Full-time Attendance,* is used to obtain verification from a school that a student attends school full-time and provides their expected graduation date. Form G–315a.1, *Notice of Cessation of Full-Time Attendance,* is used by a school to notify the RRB that a student has ceased full-time school attendance. Completion is required to obtain or retain a benefit. One response is requested of each respondent.

Forms G–315, G–315a, and G–315a.1 are being revised to include language required by the Paperwork Reduction Act of 1995. No other changes are proposed. The completion time for the G–315 is estimated at seven minutes per response. The completion time for the G–315a and G–315a.1 is estimated at two minutes. The RRB estimates that approximately 960 Form G–315's, 210 Form G–315a's and 60 Form G–315a.1's are received annually.

ADDITIONAL INFORMATION OR COMMENTS: To request more information or to obtain a copy of the information collection justification, forms, and/or supporting material, please call the RRB Clearance Officer at (312) 751–3363. Comments regarding the information collection should be addressed to Ronald J. Hodapp, Railroad Retirement Board, 844 North Rush Street, Chicago, Illinois 60611–2092. Written comments should be received within 60 days of this notice.

Chuck Mierzwa,

Clearance Officer.

[FR Doc. 97–8868 Filed 4–7–97; 8:45 am]

BILLING CODE 7905–01–M

RAILROAD RETIREMENT BOARD

Proposed Collection; Comment Request

SUMMARY: In accordance with the requirement of Section 3506(c)(2)(A) of the Paperwork Reduction Act of 1995 which provides opportunity for public comment on new or revised data collections, the Railroad Retirement Board (RRB) will publish periodic summaries of proposed data collections.

Comments are invited on: (a) Whether the proposed information collection is necessary for the proper performance of the functions of the agency, including whether the information has practical utility; (b) the accuracy of the RRB's estimate of the burden of the collection of the information; (c) ways to enhance the quality, utility, and clarity of the information to be collected; and (d) ways to minimize the burden related to the collection of information on respondents, including the use of automated collection techniques or other forms of information technology.

Title and purpose of information collection: Employee Representative's Status and Compensation Reports; OMB 3220–0014.

Under Section 1(b)(1) of the Railroad Retirement Act (RRA), the term ''employee'' includes an individual who is an employee representative. As defined in Section 1(c) of the RRA, an employee representative is an officer or official representative of a railway labor organization other than a labor organization included in the term ''employer,'' as defined in the RRA, who before or after August 29, 1935, was in the service of an employer under the RRA and who is duly authorized and designated to represent employees in accordance with the Railway Labor Act, or, any individual who is regularly

assigned to or regularly employed by such officer or official representative in connection with the duties of his or her office. The requirements relating to the application for employee representative status and the periodic reporting of the compensation resulting from such status is contained in 20 CFR 209.10.

The RRB utilizes Forms DC–2a, Employee Representative's Status Report, and DC–2, Employee Representative's Report of Compensation to obtain the information needed to determine employee representative status and to maintain a record of creditable service and compensation resulting from such status. Completion is required to obtain or retain a benefit. One response is requested of each respondent.

No changes are proposed to either form DC–2a or DC–2. The completion time for Form DC–2 is estimated at 30 minutes per response. The RRB estimates that approximately 85 Form DC–2's are received annually. The RRB estimates that less than 10 Form DC–2a's are received annually.

ADDITIONAL INFORMATION OR COMMENTS: To request more information or to obtain a copy of the information collection justification, forms, and/or supporting material, please call the RRB Clearance Officer at (312) 751–3363. Comments regarding the information collection should be addressed to Ronald J. Hodapp, Railroad Retirement Board, 844 North Rush Street, Chicago, Illinois 60611–2092. Written comments should be received within 60 days of this notice.

Chuck Mierzwa,

Clearance Officer.

[FR Doc. 97–8869 Filed 4–7–97; 8:45 am]

BILLING CODE 7905–01–M

RAILROAD RETIREMENT BOARD

Sunshine Act Meeting; Notice of Public Meeting

Notice is hereby given that the Railroad Retirement Board will hold a meeting on April 16, 1997, 9:00 a.m., at the Board's meeting room on the 8th floor of its headquarters building, 844 North Rush Street, Chicago, Illinois, 60611. The agenda for this meeting follows:

Portion Open to the Public

(1) Reduction in Prepayment Verification Period.

(2) Revision and Codification of Consolidated Board Orders Pursuant to Executive Order 12861.

(3) Coverage Determinations: A. Union Pacific Distribution Services, B. Union Pacific Technology, Inc.

(4) Regulations—Part 211, Pay for Time Lost—Status Update.

(5) Year 2000 Issues.

(6) Labor Member Truth in Budgeting Status Report.

Portion Closed to the Public

(A) Performance Awards.

(B) SES Bonuses and SES Pay Level Adjustments.

(C) *Pending Board Appeals:*

1. Jimmy W. Bowen
2. C.G. Melton
3. Helen McGinnis
4. John J. McNamara
5. Ruby Brown (96–AP–0004)
6. Michael Cook (96–AP–0036)
7. Lois Y. Dickerson (4233)
8. Thomas G. Johnson (96–AP–0020)
9. Lee C. Mansfield (96–AP–0043)
10. Billy D. LeMay (96–AP–0011)
11. Barbara Rock (96–AP–0044)
12. Mary Ann Wilson (96–AP–0041)

The person to contact for more information is Beatrice Ezerski, Secretary to the Board. Phone No. 312–751–4920.

Dated: April 3, 1997.

Beatrice Ezerski,

Secretary to the Board.

[FR Doc. 97–9044 Filed 4–4–97; 9:35 am]

BILLING CODE 7905–01–M

SECURITIES AND EXCHANGE COMMISSION

Requests Under Review by the Office of Management and Budget

Agency Clearance Officer: Michael E. Bartell, (202) 942–8800.

Upon Written Request, Copy Available From: Securities and Exchange Commission, Office of Filings and Information Services, 450 Fifth Street, N.W., Washington, D.C. 20549

Extension:

Rule 30a–1, File No. 270–210, OMB Control No. 3235–0219

Form N–54A, File No. 270–182, OMB Control No. 3235–0237

Form N–54C, File No. 270–184, OMB Control No. 3235–0236

Form N–6F, File No. 270–185, OMB Control No. 3235–0238

Notice is hereby given that, pursuant to the Paperwork Reduction Act of 1980 (44 U.S.C. 3501 *et seq.*), the Securities and Exchange Commission (''Commission'') has submitted to the Office of Management and Budget requests for approval of extension on the following rule and forms:

Form N–54A (17 CFR 274.53) is the notification of election to be regulated as a business development company. The annual burden is about .5 hours per respondent.

Form N–54C (17 CFR 274.54) is used to notify the Commission that a company withdraws its election to be regulated as a business development company. The annual burden is about 1 hour per respondent.

Form N–6F (17 CFR 274.15) permits a company that has lost its exclusion from the Investment Company Act of 1940 because it intends to make a public offering as a business development company, but is not ready to file Form N–54A, to remain exempt from the Act for up to 90 days. The annual burden is about .5 hour per respondent.

Rule 30a–1 (17 CFR 270.30a–1) requires every registered investment company to file a semi-annual report with the Commission. The burden of meeting the requirement of this rule is the burden of filing Form N–SAR, the reporting form prescribed under the rule. Approval for Form N–SAR has been given separately.

The estimates of burden hours set forth above are made solely for the purposes of the Paperwork Reduction Act and are not derived from a comprehensive or even representative survey or study of the cost of SEC rules and forms.

General comments regarding the estimated burden hours should be directed to the Desk Officer for the Securities and Exchange Commission at the address below. Any comments concerning the accuracy of the estimated average burden hours for compliance with Commission rules and forms should be directed to Michael E. Bartell, Associate Executive Director, Office of Information Technology, Securities and Exchange Commission, 450 Fifth Street, N.W., Washington, D.C. 20549, and Desk Officer for the Securities and Exchange Commission, Office of Information and Regulatory Affairs, Office of Management and Budget Room 3208, New Executive Office Building, Washington, D.C. 20503.

Dated: March 31, 1997.

Margaret H. McFarland,

Deputy Secretary.

[FR Doc. 97–8875 Filed 4–7–97; 8:45 am]

BILLING CODE 8010–01–M

SECURITIES AND EXCHANGE COMMISSION

[Rel. No. IC–22592; 811–3376]

PaineWebber/Kidder, Peabody Premium Account Fund; Notice of Application

April 1, 1997.

AGENCY: Securities and Exchange Commission (''SEC'').

ACTION: Notice of Application for Deregistration under the Investment Company Act of 1940 (the ''Act'').

APPLICANT: PaineWebber/Kidder, Peabody Premium Account Fund.

RELEVANT ACT SECTION: Order requested under section 8(f).

SUMMARY OF APPLICATION: Applicant requests an order declaring that it has ceased to be an investment company.

FILING DATES: The application was filed on December 9, 1996, and amended on March 26, 1997.

HEARING OR NOTIFICATION OF HEARING: An order granting the application will be issued unless the SEC orders a hearing. Interested persons may request a hearing by writing to the SEC's Secretary and serving applicant with a copy of the request, personally or by mail. Hearing requests should be received by the SEC by 5:30 p.m. on April 28, 1997, and should be accompanied by proof of service on applicant, in the form of an affidavit or, for lawyers, a certificate of service. Hearing requests should state the nature of the writer's interest, the reason for the request, and the issues contested. Persons who wish to be notified of a hearing may request notification by writing to the SEC's Secretary.

ADDRESSES: Secretary, SEC, 450 Fifth Street, NW., Washington, DC 20549. Applicant, 1285 Avenue of the Americas, New York, NY 10019.

FOR FURTHER INFORMATION CONTACT: Lisa McCrea, Staff Attorney (202) 942–0562, or Mercer E. Bullard, Branch Chief, (202) 942–0564 (Office of Investment Company Regulation, Division of Investment Management).

SUPPLEMENTARY INFORMATION: The following is a summary of the application. The complete application may be obtained for a fee at the SEC's Public Reference Branch

Applicant's Representations

1. Applicant is an open-end management investment company organized as a Massachusetts business trust. On January 13, 1982, applicant filed a Notification of Registration under the Act. On January 15, 1982, applicant filed a Registration Statement under the Act and the Securities Act of 1933, which became effective on May 7, 1982, and the initial public offering of shares commenced thereafter. On January 30, 1995, applicant's name was changed from ''Kidder, Peabody Premium Account Fund'' to its current name.

2. On July 20, 1995, the Board of Trustees of applicant (''Board'') adopted resolutions approving an Agreement and Plan of Reorganization and Termination (''Plan'') between applicant and PaineWebber RMA Money Fund, Inc. (''PW Corporation''), on behalf of its series, PaineWebber RMA Money Market Portfolio (''PW Fund''). Pursuant to rule 17a–8 under the Act,[1] applicant's Board determined that the proposed reorganization was in the best interests of applicant and that the interests of its securityholders would not be diluted as a result of the reorganization. The Board considered the following factors: compatibility of investment objectives, policies and restrictions; the effect of the reorganization on the expense ratio of PW Fund relative to its and applicant's current expense ratios; possible alternatives to the reorganization, including continued operation on a stand-alone basis or liquidation.

3. Applicant distributed a combined prospectus and proxy statement to securityholders of applicant on or about January 5, 1996, and filed definitive materials with the SEC on January 23, 1996. On February 13, 1996, the securityholders of applicant approved the Plan.

4. Pursuant to the Plan, PW Corporation, on behalf of PW Fund, acquired all right, title and interest in and to the assets of applicant in exchange for shares of common stock in PW Fund (collectively, the ''Closing Shares'') and the assumption of the liabilities of applicant. On February 20, 1996 (the ''Closing Date''), applicant distributed to its securityholders the Closing Shares of PW Fund received by applicant in exchange for such securityholders' holdings of applicant's shares. Also on the Closing Date, applicant paid its securityholders a dividend to distribute its investment company taxable income for the current taxable year through the Closing Date. The number of shares of PW Fund issued to applicant had an aggregate net asset value equal to the aggregate value of applicant's assets transferred to PW Fund as of the Closing Date. As of the Closing Date, there were 528,420,026 shares of applicant outstanding, having an aggregate net asset value of $528,254,922 and a per share net asset value of $1.00. The liquidation and distribution were accomplished by opening accounts on the books of PW Fund in the names of the securityholders of applicant and transferring the Closing Shares credited to the accounts of applicant on the books of PW Fund. Each such account was credited with the securityholder's respective, *pro rata* number of Closing Shares. There are no securityholders of applicant to whom distributions in complete liquidation of their interests have not been made.

5. The expenses incurred in connection with the Plan were approximately $65,000 for legal expenses, $30,000 for printing and mailing communications to securityholders, $182,157 for SEC registration fees, and miscellaneous accounting and administrative expenses. These expenses totalled approximately $300,000, and were borne by the applicant and PW Fund in proportion to their respective net assets. No brokerage commissions were paid in connection with the reorganization.

6. Applicant has no securityholders, assets, debts, or liabilities. Applicant is not a party to any litigation or administrative proceedings. Applicant is not now engaged, and does not propose to engage, in any business activities other than those necessary for winding-up of its affairs.

7. Applicant intends to file an Officer's Certificate with the Office of the Secretary of the Commonwealth of Massachusetts to terminate its existence.

For the SEC, by the Division of Investment Management, under delegated authority.

Margaret H. McFarland,

Deputy Secretary.

[FR Doc. 97–8930 Filed 4–7–97; 8:45 am]

BILLING CODE 8010–01–M

[1] Rule 17a–8 provides an exemption from section 17(a) of the Act for certain reorganizations among registered investment companies that may be affiliated persons, or affiliated persons of an affiliated person, solely by reason of having a common investment adviser, common directors, and/or common officers.

SECURITIES AND EXCHANGE COMMISSION

[Rel. No. IC–22591; 811–2928]

PaineWebber/Kidder, Peabody Cash Reserve Fund, Inc.; Notice of Application

April 1, 1997.

AGENCY: Securities and Exchange Commission (''SEC'').

ACTION: Notice of Application for Deregistration under the Investment Company Act of 1940 (the ''Act'').

APPLICANT: PaineWebber/Kidder, Peabody Cash Reserve Fund, Inc.

RELEVANT ACT SECTION: Order requested under section 8(f).

SUMMARY OF APPLICATION: Applicant requests an order declaring that it has ceased to be an investment company.

FILING DATES: The application was filed on December 9, 1996 and amended on March 26, 1997.

HEARING OR NOTIFICATION OF HEARING: An order granting the application will be issued unless the SEC orders a hearing. Interested persons may request a hearing by writing to the SEC's Secretary and serving applicant with a copy of the request, personally or by mail. Hearing requests should be received by the SEC by 5:30 p.m. on April 28, 1997, and should be accompanied by proof of service on applicant, in the form of an affidavit or, for lawyers, a certificate of service. Hearing requests should state the nature of the writer's interest, the reason for the request, and the issues contested. Persons who wish to be notified of a hearing may request notification by writing to the SEC's Secretary.

ADDRESSES: Secretary, SEC, 450 Fifth Street, N.W., Washington, D.C. 20549. Applicant, 1285 Avenue of the Americas, New York, NY 10019.

FOR FURTHER INFORMATION CONTACT: Lisa McCrea, Staff Attorney (202) 942–0562, or Mercer E. Bullard, Branch Chief, (202) 942–0564 (Office of Investment Company Regulation, Division of Investment Management).

SUPPLEMENTARY INFORMATION: The following is a summary of the application. The complete application may be obtained for a fee at the SEC's Public Reference Branch.

Applicant's Representation

1. Applicant is an open-end management investment company, organized as a Maryland corporation. On June 6, 1979, applicant filed a Notification of Registration under the Act and a Registration Statement under the Act and Securities Act of 1933, which became effective on August 17, 1979. Applicant's initial public offering of shares commenced thereafter. On January 30, 1995, applicant's name was changed from ''Kidder, Peabody Cash Reserve Fund, Inc.'' to its current name.

2. On July 20, 1995, the Board of Trustees of applicant (''Board'') adopted resolutions approving an Agreement and Plan of Reorganization and Dissolution (''Plan'') between applicant and PaineWebber RMA Money Fund, Inc. (''PW Corporation''), on behalf of its series, PaineWebber RMA Money Market Portfolio (''PW Fund''). Pursuant to rule 17a–8 under the Act,[1] applicant's Board determined that the proposed reorganization was in the best interests of applicant and that the interests of its securityholders would not be diluted as a result of the reorganization. The Board considered the following factors: compatibility of investment objectives, policies and restrictions; the effect of the reorganization on the expense ratio of PW Fund relative to its and applicant's current expense ratios; possible alternatives to the reorganization, including continued operation on a stand-alone basis or liquidation.

3. Applicant distributed a combined prospectus and proxy statement to securityholders of applicant on or about January 5, 1996, and applicant filed definitive materials with the SEC on January 23, 1996. On February 13, 1996, the securityholders of applicant approved the Plan.

4. Pursuant to the Plan, PW Corporation, on behalf of PW Fund, acquired all right, title and interest in and to the assets of applicant in exchange for shares of common stock in PW Fund (collectively, the ''Closing Shares'') and the assumption of the liabilities of applicant. On February 20, 1996 (the ''Closing Date''), applicant distributed to its securityholders the Closing Shares of PW Fund received by applicant, in exchange for such secuityholders' holdings of applicant's shares. Also on the Closing Date, applicant paid its securityholders a dividend to distribute its investment company taxable income for the current taxable year through the Closing Date. The number of shares of PW Fund issued to applicant had an aggregate net asset value equal to the aggregate value of applicant's assets transferred to PW Fund as of the Closing Date. As of the Closing Date, there were 881,401,323 shares to applicant outstanding, having an aggregate net asset value of $881,308,148 and a per share net asset value of $1.00. The liquidation and distribution were accomplished by opening accounts on the books of PW Fund in the names of the securityholders of applicant and transferring the Closing Shares credited to the accounts of applicant on the books of PW Fund. Each such account so opened was credited with the securityholder's respective, *pro rata* number of Closing Shares. There are no securityholders of applicant to whom distributions in complete liquidation of their interests have not been made.

5. The expense incurred in connection with the Plan were approximately $65,000 for legal expenses, $100,000 for expenses of printing and mailing communications to securityholders, $304,000 for SEC registration fees, and miscellaneous accounting and administrative expenses. These expenses totalled approximately $475,000, and were borne by the applicant and PW Fund in proportion to their respective net assets. No brokerage commissions were paid in connection with the reorganization.

6. Applicant has no securityholders, assets, debts, or liabilities. Applicant is not a party to any litigation or administrative proceedings. Applicant is not now engaged, and does not propose to engage, in any business activities other than those necessary for winding-up of its affairs.

7. Applicant filed Articles of Transfer (''Articles'') with the Maryland State Department of Assessments and Taxation (''Department''). The Department received and approved the Articles on February 20, 1996. Applicant intends to file Articles of Dissolution with the Department.

For the SEC, by the Division of Investment Management, under delegated authority.

Margaret H. McFarland,

Deputy Secretary.

[FR Doc. 97–8932 Filed 4–7–97; 8:45 am]

BILLING CODE 8010–01–M

[1] Rule 17a–8 provides an exemption from section 17(a) of the Act for certain reorganizations among registered investment companies that may be affiliated persons, or affiliated persons of an affiliated person, solely by reason of having a common investment adviser, common directors, and/or common officers.

SECURITIES AND EXCHANGE COMMISSION

[Release No. 34–38457; File No. S7–24–89]

Joint Industry Plan; Solicitation of Comments and Order Approving Request To Extend Temporary Effectiveness of Reporting Plan for Nasdaq/National Market Securities Traded on an Exchange on an Unlisted or Listed Basis, Submitted by the National Association of Securities Dealers, Inc., and the Boston, Chicago and Philadelphia Stock Exchanges

March 31, 1997.

On March 27, 1997, the National Association of Securities Dealers, Inc., on behalf of itself and the Boston, Chicago, and Philadelphia Stock Exchanges (collectively, ''Participants'')[1] submitted to the Commission a request[2] to extend the

[1] The signatories to the Plan, *i.e.*, the National Association of Securities Dealers, Inc. (''NASD''), and the Chicago Stock Exchange, Inc. (''Chx'') (previously, the Midwest Stock Exchange, Inc.), Philadelphia Stock Exchange, Inc. (''Phlx''), and the Boston Stock Exchange, Inc. (''BSE''), are the ''Participants.'' The BSE, however, joined the Plan as a ''Limited Participant,'' and reports quotation information and transaction reports only in Nasdaq/NM (previously referred to as ''Nasdaq/NMS'') securities listed on the BSE. Originally, the American Stock Exchange, Inc. (''Amex''), was a Participant to the Plan, and withdrew from participation in the Plan in August 1994.

[2] *See* letter from Robert E. Aber, Vice President and General Counsel, Nasdaq, to Jonathan G. Katz,

operation of a joint transaction reporting plan (''Plan'') for Nasdaq/National Market (''Nasdaq/NM'') securities traded on an exchange on an unlisted or listed basis.[3] The proposal would extend the effectiveness of the Plan, as amended by revised Amendment No. 9,[4] through June 30, 1997. The Commission also is extending certain exemptive relief as discussed below. The 1997 Extension Request also requests that the Commission approve the Plan, as amended, on a permanent basis on or before June 30, 1997.[5] The Commission is approving the proposed amendment to the Plan insofar as the proposal requests an extension of the effectiveness of the Plan. During the three-month extension of the Plan, the Commission will determine whether to approve the proposed Plan, as amended, on a permanent basis.

I. Background

The Commission originally approved the Plan on June 26, 1990.[6] The Plan governs the collection, consolidation and dissemination of quotation and transaction information for Nasdaq/NM securities listed on an exchange or trade on an exchange pursuant to a grant of UTP.[7] The Commission approved trading pursuant to the Plan on a one-year pilot basis, with the pilot period to commence when transaction reporting pursuant to the Plan commenced. Accordingly, the pilot period commenced on July 12, 1993, and was scheduled to expire on July 12, 1994.[8] The Plan has since been in operation on a pilot basis.[9]

II. Description of the Plan

The Joint Industry Plan provides for the collection from Plan Participants, and the consolidation and dissemination to vendors, subscribers and others of quotation and transaction information in ''eligible securities.'' [10] The Plan contains various provisions concerning the operation of the Plan, which include: Implementation of the Plan; Manner of Collecting, Processing, Sequencing, Making Available, and Disseminating Last Sale Information; Reporting Requirements (including hours of operation); Standards and Methods of Ensuring Promptness, Accuracy, and Completeness of Transaction Reports; Terms and Conditions of Access; Description of Operation of Facility Contemplated by the Plan; Method and Frequency of Processor Evaluation; Written Understandings of Agreements Relating to Interpretation of, or Participation in, the Plan; Calculation of the BBO; Dispute Resolution; Method of Determination and Imposition, and Amount of, Fees and Charges.[11]

III. Exemptive Relief

In conjunction with the Plan, on a temporary basis scheduled to expire on March 30, 1997, the Commission granted an exemption to vendors from Rule 11Ac1–2 under the Act regarding the calculation of the Best Bid and Offer (''BBO''), and granted the BSE an exemption from the provision of Rule 11Aa3–1 under the Act that requires transaction reporting plans to include market identifiers for transaction reports and last sale data. In the 1997 Extension Request, the Participants request that the Commission grant an extension of the exemptive relief described above to vendors until such time as the calculation methodology for the BBO is based on a price/size/time algorithm. In the 1997 Extension Request, the Participants also request that the Commission grant an extension of the exemptive relief described above to the BSE for so long as the BSE is a Limited Participant under the Plan.

IV. Summary of Comments

In the January 1995, August 1995, September 1995, October 1995, November 1995, December 13, 1995, December 28, 1995, March 6, 1996, March 18, 1996, September 16, 1996, and October 1, 1996 Extension Orders, the Commission solicited, among other things, comment on: (1) Whether the BBO calculation for the relevant securities should be based on price and time only (as currently is the case) or if the calculation should include size of the quoted bid or offer; [12] and (2) whether there is a need for an intermarket linkage for order routing and execution and an accompanying trade-through rule. In response, the Commission has received three comment letters regarding the issues noted at (1) and (2) above.[13]

Secretary, Commission, dated March 27, 1997 (''1997 Extension Request''). The 1997 Extension Request also requests the Commission to continue to provide exemptive relief, previously granted in connection with the Plan on a temporary basis, from Rules 11Ac1–2 and 11Aa3–1 under the Securities Exchange Act of 1934 (''Act''). *Id.*

[3] Section 12 of the Act generally requires an exchange to trade only those securities that the exchange lists, except that Section 12(f) of the Act permits unlisted trading privileges (''UTP'') under certain circumstances. For example, Section 12(f), among other things, permits exchanges to trade certain securities that are traded over-the-counter (''OTC/UTP''), but only pursuant to a Commission order or rule. The present order fulfills this Section 12(f) requirement. For a more complete discussion of this Section 12(f) requirement, see November 1995 Extension Order, *infra* note 9, at n. 2.

[4] On March 18, 1996, the Commission solicited comment on a revenue sharing agreement among the Participants. *See* March 18, 1996 Extension Order, *infra* note 9. Thereafter, the Participants submitted certain technical revisions to the revenue sharing agreement (''revised Amendment No. 9''). *See* letter from Robert E. Aber, Vice President and General Counsel, Nasdaq, to Jonathan Katz, Secretary, SEC, dated September 13, 1996. See also September 16, 1996 Extension Order, *Infra* note 9 (notice and order recognizing receipt of revised Amendment No. 9).

[5] The CHX and PHLX also request that, commensurate with permanent approval of the Plan, the number of Nasdaq/NM securities eligible for trading pursuant to the Plan be expanded to include all Nasdaq/NM securities. *See* 1997 Extension request, *supra* note 2. The NASD states that, while it recognizes the benefits from such an expansion in terms of the promotion of competition and protection of investors, it believes a wholesale expansion of Nasdaq/UTP-eligible securities to include all Nasdaq/NM securities is inseparable from an expansion of Nasdaq's Intermarket Trading System (''ITS'')/Computer Assisted Execution Service (''CAES'') linkage to include all exchange-listed securities. *Id.*

[6] See Securities Exchange Act Release No. 28146 (June 26, 1990), 55 FR 27917 (''1990 Plan Approval Order'').

[7] See Section 12(f)(2) of the Act, *supra* note 3.

[8] See letter from David T. Rusoff, Foley & Lardner, to Betsy Prout, SEC, dated May 9, 1994.

[9] See Securities Exchange Act Release No. 34371 (July 13, 1994), 59 FR 37103 (''1994 Extension Order''), Securities Exchange Act Release No. 35221, (January 11, 1995), 60 FR 3886 (''January 1995 Extension Order''), Securities Exchange Act Release No. 36102 (August 14, 1995), 60 FR 43626 (''August 1995 Extension Order''), Securities Exchange Act Release No. 36226 (September 13, 1995), 60 FR 49029 (''September 1995 Extension Order''), Securities Exchange Act Release No. 36368 (October 13, 1995), 60 FR 54091 (''October 1995 Extension Order''), Securities Exchange Act Release No. 36481 (November 13, 1995), 60 FR 58119 (''November 1995 Extension Order''), Securities Exchange Act Release No. 36589 (December 13, 1995), 60 FR 65696 (''December 13, 1995 Extension Order''), Securities Exchange Act Release No. 36650 (December 28, 1995), 60 FR 358 (''December 28, 1995 Extension Order''), Securities Exchange Act Release No. 36934 (March 6, 1996), 61 FR 10408 (''March 6, 1996 Extension Order''), Securities Exchange Act Release No. 36985 (March 18, 1996), 61 FR 12122 (''March 18, 1996 Extension Order''), Securities Exchange Act Release No. 37689 (September 16, 1996), 61 FR 50058 (''September 16, 1996 Extension Order''), and Securities Exchange Act Release No. 37772 (October 1, 1996), 61 FR 52980 (''October 1, 1996 Extension Order'').

[10] The Plan defines ''eligible security'' as any Nasdaq/NM security (i) as to which unlisted trading privileges have been granted to a national securities exchange pursuant to Section 12(f) of the Act, or (ii) which is listed on a national securities exchange.

[11] The full text of the Plan, as well as a ''Concept Paper'' describing the requirements of the Plan, are contained in the original filing which is available for inspection and copying in the Commission's Public Reference Room.

[12] The Commission recognizes that, currently, although the size of orders is considered in the calculation of the BBO, it is only in those limited instances in which two or more orders have identical prices and are entered simultaneously. Telephone conversation between Tom Gira, NASD, and George A. Villasana, Attorney, SEC, on March 27, 1997. The Commission is particularly interested in comments as to whether size should take priority over time for purposes of calculating the BBO.

[13] *See* letter from Jack A. Dempsey, Senior Vice President, Dempsey & Company, to Jonathan Katz, Secretary, SEC, dated February 21, 1995 (''Dempsey Letter''); letter from William A. Lupien, Chairman, Mitchum, Jones & Templeton, Inc. (''MJT''), to

Continued

The Commission has received two comments in support of a BBO calculation based on a price/size/time algorithm.[14] These commenters explain that, without giving size precedence over time in the BBO calculation, the BBO does not provide an accurate representation of the depth of the market.[15]

The Commission has received one comment in support of the current BBO calculation based on a price/time/size algorithm.[16] In the Smith Barney Letter, Smith Barney explains that giving size precedence over time in the BBO calculation provides Nasdaq market makers and exchanges making a UTP market with the incentive to incrementally increase size rather than improve prices.[17] Smith Barney states that the application of a price/size/time methodology for the calculation of BBO would encourage market makers only to increase the size of their quotation as it would enable them to attract order flow. Smith Barney states that this is because the price/size/time methodology allows the market maker quoting the greatest size at the best price to be identified as providing the BBO on vendor screens and to move to the front of the line to receive unpreferenced SOES and Computer Assisted Execution Service orders. Smith Barney states that the application of a price/time/size methodology encourages market makers to improve their prices, and not order size, in order to attract order flow. Smith Barney states that this is because the price/time/size methodology allows the market maker who quoted the best price first in time to be identified as providing the BBO. Smith Barney believes that the price/time/size methodology benefits customers as it encourages market makers to improve prices.

The Commission has received two comments in support of an intermarket linkage for order routing and execution, and an accompanying trade-through rule.[18] Dempsey states that an intermarket linkage and trade-through rule would increase market efficiency, transparency, and liquidity. Smith Barney states that an intermarket linkage would assure fair competition and best execution of customer orders.

Also in response to the Commission's request for comment on the aforementioned issues, the Board of Directors of The Nasdaq Stock Market, Inc. (''Nasdaq'') approved two recommendations at its meeting on March 25, 1997 as set forth below.[19] With respect to the BBO calculation issue, the Nasdaq Board approved a recommendation to modify the methodology for calculating the BBO on Nasdaq to prioritize quotes based on a price/size/time algorithm instead of the current price/time/size algorithm, provided that Nasdaq market makers are subject to a minimum quote size requirement of 100 shares for at least 1,000 Nasdaq securities.[20] With respect to the intermarket linkage issue, the Nasdaq Board approved a recommendation to provide specialists on an exchange trading Nasdaq securities on an UTP basis access to Nasdaq's Small Order Execution System (''SOES''), or its successor system, to the same extent that registered Nasdaq market makers have access to SOES, provided that (1) Nasdaq market makers are afforded virtually identical access to the automated execution system operated by such UTP exchange, and (2) the order execution algorithms of the exchange's automated execution system are virtually identical to SOES's or its successor system.[21]

The Commission continues to solicit comment on (1) whether the BBO calculation for securities traded pursuant to the Plan should be based on a price/time/size methodology or a price/size/time methodology; (2) whether there is a need for an intermarket linkage for order routing an execution; and (3) whether there is a need for a trade-through rule.[22]

V. Solicitation of Comment

Interested persons are invited to submit written data, views and arguments concerning the foregoing. Persons making written submissions should file six copies thereof with the Secretary, Securities and Exchange Commission, 450 Fifth Street, N.W., Washington, D.C. 20549. Copies of the submission, all subsequent amendments, all written statements with respect to the proposed rule change that are filed with the Commission, and all written communications relating to the proposed rule change between the Commission and any person, other than those that may be withheld from the public in accordance with the provisions of 5 U.S.C. 552, will be available for inspection and copying at the Commission's Public Reference Room. All submissions should refer to File No. S7–24–89 and should be submitted by April 29, 1997.

VI. Discussion

The Commission finds that an extension of temporary approval of the operation of the Plan, as amended, through June 30, 1997, is appropriate and in furtherance of Section 11A of the Act as it will provide the Participants with additional time and make reasonable proposals concerning the BBO calculation and whether there is a need for an intermarket linkage for order routing and execution and an accompanying trade through rule. While the Commission continues to solicit comment on these matters, the Commission believes that these matters should be addressed directly by the Participants on or before May 30, 1997 so that the Commission may have ample time to determine whether to approve the Plan on a permanent basis by June 30, 1997.

The Commission further finds that it is appropriate to extend the exemptive relief from Rule 11Ac1–2 under the Act until the earlier of June 30, 1997 or until

---

Secretary, SEC, dated February 21, 1995 (''MJT Letter''); and letter from Robert E. Moore, Managing Director, Smith Barney Inc., to Jonathan Katz, Secretary, SEC, dated August 18, 1995 (''Smith Barney Letter'').

[14] See MJT Letter and Dempsey Letter, *supra* note 13.

[15] In the Dempsey Letter, Dempsey states that when the BBO in a particular security is 12–12¼ (500 × 1000), and a market maker, broker, or investor expresses an interest to buy 2500 shares at $12.00 per share, that bid will not be displayed in the quote, such that the BBO will continue to be 12–12¼ (500 × 1000). Dempsey states that this is not a true picture of the current market. Dempsey states that the BBO calculation should include the size of the quoted bid and offer, and that size should have precedence over time.

[16] See Smith Barney Letter, *supra* note 13.

[17] The Commission notes, however, that this letter was written prior to the effectiveness and phased-in implementation of the Commission's Order Execution Rules which, among other things, require market makers and specialists to display their customer limit orders, and prior to the Commission's related partial approval of the NASD's proposed rule changes to provide for the implementation of the Order Execution Rules. See Securities Exchange Act Release Nos. 37619A, (September 6, 1996, 61 FR 48290 (adopting Order Exec. Rules) and 38156 (January 10, 1997), 62 FR 2415 (partially approving File No. SR–NASD–96–43). Therefore, when the Smith Barney letter was submitted to the Commission, market makers generally displayed the minimum size required by NASD rules, such as 1000 shares or 500 shares. Currently, however, for certain stocks that have been phased-in under the Order Execution Rules and that are subject to the NASD's Rules, market makers may quote for as little as 100 shares.

[18] See Dempsey Letter and Smith Barney Letter, *supra* note 13.

[19] See 1997 Extension Request, *supra* note 2.

[20] *Id.* In the event that Nasdaq develops the technological capability to afford market makers simultaneous electronic access to all market maker quotes at the same price level, the Nasdaq Board believes that the methodology used to determine the quoted size of the Nasdaq market must be reconsidered to accommodate reflection of the fully accessible size displayed and Nasdaq. *Id.*

[21] *Id.*

[22] The Commission requests that all comments be submitted no later than May 30, 1997 so that the Commission may have adequate time to consider all comments prior to June 30, 1997, the date on which the Commission will determine whether to approve the Plan on a permanent basis.

such time as the calculation methodology for the BBO is based on a price/size/time algorithm pursuant to the 1997 Extension Request or other mutual agreement among the Participants approved by the Commission. The Commission further finds that it is appropriate to extend the exemptive relief from Rule 11Aa3–1 under the Act, that requires transaction reporting plans to include market identifiers for transaction reports and last sale data, to the BSE through June 30, 1997. The Commission believes that the extensions of the exemptive relief provided to vendors and the BSE, respectively are consistent with the Act, the Rules thereunder, and specifically with the objectives set forth in Sections 12(f) and 11A of the Act and in Rules 11Aa3–1 and 11Aa3–2 thereunder.

VII. Conclusion

It is therefore ordered, pursuant to Sections 12(f) and 11A of the Act and (c)(2) of Rule 11Aa3–2 thereunder, that the Participants' request to extend the effectiveness of the Joint Transaction Reporting Plan, as amended, for Nasdaq/National Market securities traded on an exchange on an unlisted or listed basis through June 30, 1997, and certain exemptive relief until such time as the calculation method for the BBO is based on a price/size/time algorithm, is approved.

For the Commission, by the Division of Market Regulation, pursuant to delegated authority, 17 CFR 200.30–3(a)(29).

Margaret H. McFarland,

Deputy Secretary.

[FR Doc. 97–8873 Filed 4–7–97; 8:45 am]

BILLING CODE 8010–01–M

SECURITIES AND EXCHANGE COMMISSION

[Release No. 34–38460; File No. SR–Amex–97–16]

Self-Regulatory Organizations; Notice of Filing and Immediate Effectiveness of Proposed Rule Change by the American Stock Exchange, Inc. Relating to Equity Transaction Fee Changes

April 1, 1997.

Pursuant to Section 19(b)(1) of the Securities Exchange Act of 1934 (''Act''),[1] notice is hereby given that on March 25, 1997, the American Stock Exchange, Inc. (''Amex'' or ''Exchange'') filed with the Securities Exchange Commission (''Commission'') the proposed rule change as described in Items I, II, and III below, which Items have been prepared by the self-regulatory organization. The Commission is publishing this notice to solicit comments on the proposed rule change from interested persons.

I. Self-Regulatory Organization's Statement of the Terms of Substance of the Proposed Rule Change

The Amex is making certain changes to its schedule of transaction charges imposed on trades in equity securities executed on the Exchange. The text of the proposed rule change is available at the Office of the Secretary, the Amex, and at the Commission.

II. Self-Regulatory Organization's Statement of the Purpose of, and Statutory Basis for, the Proposed Rule Change

In its filing with the Commission, the self-regulatory organization included statements concerning the purpose of and basis for the proposed rule change and discussed any comments it received on the proposed rule change. The text of these statements may be examined at the places specified in Item IV below. The self-regulatory organization has prepared summaries, set forth in Sections A, B, and C below, of the most significant aspects of such statements.

A. Self-Regulatory Organization's Statement of the Purpose of, and Statutory Basis for, the Proposed Rule Change

1. Purpose

The Amex is revising its schedule of equity transaction charges for PER orders by expanding the exemption from share-based and value-based transaction charges to include PER orders up to 1,099 shares, increased from 500 shares.[2] In addition, the value portion of the Amex's equity transaction charge (based on the value of shares traded as opposed to the other portion of the charge based on the number of shares traded), will be subject to a maximum charge of $40 per trade.[3]

The exemption for PER orders up to 1,099 shares will not apply to orders of a member or member organization trading as an agent for the account of a non-member competing market maker. A ''competing market maker'' will be defined as a specialist or market maker registered as such on a registered stock exchange (other than the Amex), or a market maker bidding and offering over-the-counter in an Amex-traded security.[4] The schedule of Amex share-based and value-based transaction charges otherwise remains unchanged.

The Exchange's schedule of equity transaction charges, as revised, is attached as Exhibit A to the filing and will be implemented by the Exchange beginning May 30, 1997.

2. Statutory Basis

The Exchange believes the proposed rule change is consistent with Section 6(b) of the Act[5] in general and furthers the objectives of Section 6(b)(4)[6] in particular in that it provides for the equitable allocation of reasonable dues, fees, and other charges among the Exchange's members and other persons using its facilities.

B. Self-Regulatory Organization's Statement on Burden on Competition

The Exchange believes the proposed rule change does not impose any burden on competition that is not necessary or appropriate in furtherance of the purposes of the Act.

C. Self-Regulatory Organization's Statement on Comments on the Proposed Rule Change Received from Members, Participants, or Others

The Exchange has neither solicited nor received written comments on the proposed rule change.

III. Date of Effectiveness of the Proposed Rule Change and Timing for Commission Action

The foregoing rule change constitutes or changes a due, fee, or other charge imposed by the Exchange and, therefore, has become effective pursuant to Section 19(b)(3)(A) of the Act[7] and subparagraph (e) of Rule 19b–4 thereunder.[8]

At any time within sixty days of the filing of such proposed rule change, the Commission may summarily abrogate such rule change if it appears to the Commission that such action is necessary or appropriate in the public interest, for the protection of investors,

---

[1] 15 U.S.C. 78s(b)(1).

[2] The Commission notes that the Amex's Post Execution Reporting (''PER'') system provides member firms with the means to electronically transmit equity orders, up to volume limits specified by the Exchange, directly to a specialist's post on the trading floor of the Exchange. Securities Exchange Act Release No. 34869 (Oct. 20, 1994), 59 FR 54016.

[3] The Commission notes that orders of competing market makers do qualify for this fee cap. Telephone conversation between Michael Cavalier, Associate General Counsel, Amex, and Anthony P. Pecora, Attorney, Division of Market Regulation, SEC (Apr. 1, 1997).

[4] The Commission notes that this definition of ''competing market maker'' is identical to the definition used by the New York Stock Exchange. *See* Securities Exchange Act Release No. 37273 (June 4, 1996), 61 FR 29438, at n.14 (approving a similar fee change proposed by the NYSE).

[5] 15 U.S.C. 78f(b).

[6] 15 U.S.C. 78f(b)(4).

[7] 15 U.S.C. 78s(b)(3)(A).

[8] 17 CFR 240.19b–4.

or otherwise in furtherance of the purposes of the Act.

IV. Solicitation of Comments

Interested persons are invited to submit written data, views, and arguments concerning the foregoing. Persons making written submissions should file six copies thereof with the Secretary, Securities and Exchange Commission, 450 Fifth Street, N.W., Washington, D.C. 20549. Copies of the submission, all subsequent amendments, all written statements with respect to the proposed rule change that are filed with the Commission, and all written communications relating to the proposed rule change between the Commission and any person, other than those that may be withheld from the public in accordance with the provisions of 5 U.S.C. § 552, will be available for inspection and copying at the Commission's Public Reference Section, 450 Fifth Street, N.W., Washington, D.C. 20549. Copies of such filing also will be available for inspection and copying at the principal office of the Amex. All submissions should refer to File No. SR–Amex–97–16 and should be submitted by April 29, 1997.

For the Commission, by the Division of Market Regulation, pursuant to delegated authority.[9]

Margaret H. McFarland,

Deputy Secretary.

[FR Doc. 97–8876 Filed 4–7–97; 8:45 am]

BILLING CODE 8010–01–M

SECURITIES AND EXCHANGE COMMISSION

[Release No. 34–38468; File No. SR–NASD–96–46]

Self-Regulatory Organizations; Notice of Filing of Proposed Rule Change by NASD Regulation, Inc. Relating to the Submission of Information in Electronic Form

April 2, 1997.

Pursuant to Section 19(b)(1) of the Securities Exchange Act of 1934 (''Act''), 15 U.S.C. 78s(b)(1), notice is hereby given that on March 17, 1997,[1] NASD Regulation, Inc. (''NASDR'') filed with the Securities and Exchange Commission (''SEC'' or ''Commission'') the proposed rule change as described in Items I, II, and III below, which Items have been prepared by NASDR. The Commission is publishing this notice to solicit comments on the proposed rule change from interested persons.

I. Self-Regulatory Organization's Statement of the Terms of Substance of the Proposed Rule Change

NASDR is proposing to amend Rule 8210 of the Procedural Rules of the National Association of Securities Dealers, Inc. (''NASD'' or ''Association'') to permit the NASD to request that members provide regulatory information in electronic form (where the member maintains its records in electronic form) and to establish electronic submission programs for regularly filed regulatory information. Below is the text of the proposed rule change. Proposed new language is in italics.

Procedural Rules

8000. Complaints, Investigations and Sanctions

* * * * *

8200. Investigations

8210. Reports and Inspection of Books for Purpose of Investigating Complaints

(a) For the purpose of any investigation, or determination as to filing a complaint or any hearing of any complaint against any member of the Association or any person associated with a member made or held in accordance with the Rule 9000 Series, or made or held by another domestic or foreign self-regulatory organization, association, securities or contract market or regulator of such markets, with whom the Association has entered into an agreement providing for the exchange of information and other forms of material assistance solely for market surveillance, investigative, enforcement or other regulatory purposes, any District Business Conduct Committee, the Market Surveillance Committee, or the Board of Governors, or any duly authorized member or members of any such Committees or Board or any duly authorized agent or agents of any such Committee or Board shall have the right:

(1) to require any member of the Association, person associated with a member, or person no longer associated with a member when such person is subject to the Association's jurisdiction to report, either informally or on the record, orally or in writing *or electronically (if the requested information is maintained in electronic form)* with regard to any matter involved in any such investigation or hearing, and

(2) to investigate the books, records and accounts of any such member or person with relation to any matter involved in any such investigation or hearing.

(b) No such member or person shall fail to make any report as required in this Rule, or fail to permit any inspection of books, records and accounts as may be validly called for under this Rule. Any notice requiring an *electronic*, oral, or written report or calling for an inspection of books, records and accounts pursuant to this Rule shall be deemed to have been received by the member or person to whom it is directed by the mailing thereof to the last known address of such member or person as reflected on the Association's records.

(c) In carrying out its responsibilities under this paragraph, the Association may, as approved by the Commission, establish programs for the submission of information to the Association on a regular basis through a direct or indirect electronic interface between the Association and members.

* * * * *

II. Self-Regulatory Organization's Statement of the Purpose of, and Statutory Basis for, the Proposed Rule Change

In its filing with the Commission, NASDR included statements concerning the purpose of and basis for the proposed rule change and discussed any comments it received on the proposed rule change. The text of these statements may be examined at the places specified in Item IV below. NASDR has prepared summaries, set forth in Sections A, B, and C below, of the most significant aspects of such statements.

A. Self-Regulatory Organization's Statement of the Purpose of, and Statutory Basis for, the Proposed Rule Change

(a) Various NASD and SEC rules require members to maintain records of compliance so that information will be available to NASD staff for on-site examination. In addition, members are required by NASD and SEC rules to submit certain information to the NASD on a regular basis or on request. The various rules and regulations of the Municipal Securities Rulemaking Board (''MSRB'') also impose recordkeeping requirements on members of the Association. Rule 8210 of the Association's Conduct Rules (formerly, Article IV, Section 5 of the Rules of Fair Practice) requires members to respond to any NASD request for information for the purpose of any investigation or determination as to the filing of a

---

[9] 17 CFR 200.30–3(a)(12).

[1] On December 17, 1996, the NASDR filed the proposed rule change with the Commission. However, Amendment No. 1, modifying the rule language, replaces the original rule filing.

complaint or any hearing of a complaint and to submit such information ''orally or in writing.'' This provision covers the Association's request for investigatory information in the context of an individual examination or investigation of a member firm and also covers the Association's programs for the receipt of regular reports from members.

Amendment to Obtain Information in Electronic Form—In recent years, members have increasingly maintained their trading records in computer-based technology (''electronic'') rather than hard copy form, particularly as the rapidly expanding volume of securities transactions has required the speed of electronic processing. At this time, most members store their primary trading records in some form of electronic storage media.[2] Such electronic storage capability is provided either in-house or through a service bureau. Relatively few members maintain their records only in manual form.

With respect to the Association's conduct of an individual examination or investigation of a member firm's trading activities, the NASD has previously requested such information in hard copy or ''written'' form, even where the member stored the information in electronic form.[3] In these cases, members provide a hard copy print of the electronically stored data or the examining staff reviews electronic data displayed on-line to transfer the information to hard copy. To the extent that members store their important trading records in electronic storage media, many members have indicated that they prefer that the staff of the NASD accept such trading information in that form because of increased cost efficiencies.[4] The SEC has recently announced policies that clarify when and in what manner members are permitted to store the books and records required by SEC rules in electronic form.[5] NASDR is, moreover, currently engaged in a long-term initiative that will permit examining staff to utilize current computer-based technology in the course of conducting an examination of a member firm to analyze larger numbers of securities transactions than can be achieved using current manual methodology.[6]

The Association believes that the current provision of Rule 8210 that permits the Association to request that a member or a person associated with a member report ''in writing,'' covers information stored by a member in a form of electronic media, as the electronic format merely retains the written record. The NASDR is, however, proposing to amend Rule 8210 to provide specifically that a member may be required to submit a report in electronic form where the member maintains the information in that manner. The proposed rule change would amend subparagraph (a)(1) to require ''* * * any member of the Association, person associated with a member, or person no longer associated with a member when such person is subject to the Association's jurisdiction to report, either informally or on the record, orally or in writing *or electronically (if the requested information is maintained in electronic form)* with regard to any matter involved in any such investigation or hearing * * *'' and would amend subparagraph (b) to insert the word ''electronic'' in the provision regarding the receipt of any notice requiring a report (emphasis provided). NASDR believes that this action will both increase examination efficiency and will eliminate the costs borne by members in providing electronically maintained information in hard copy to NASDR examiners. Consequently, the potential for human error and delay attendant with paper submission will be decreased.

Amendment to Establish Electronic Submission Programs—The NASD has also worked with the membership over many years to develop procedures for the electronic submission of periodic reports or other frequently requested investigatory data that would otherwise be submitted in written form in order to better fulfill its regulatory responsibilities under the federal securities laws. Such programs for electronic submissions have already been established for filing of members' FOCUS Reports, Blue Sheet Reports, Short Interest Reports, Forms U–4 and U–5 with Central Registration Depository (''CRD'').[7]

As the Association continues to increase its services to the membership and enhance its ability to surveil for regulatory compliance through the use of computer-based technology, it is important that NASDR be able to establish electronic submission programs for information required to be submitted by members on a regular basis. In recent discussions with the membership on this issue, members indicated they preferred to submit frequently filed information electronically because of assurance of receipt (in comparison to the mails) and the ability to amend a previously-submitted filing if an error is subsequently discovered. The Association is, therefore, proposing to amend Rule 8210 to add new paragraph (c) to provide general authority for the Association to establish programs for the submission of information on a regular basis through direct or indirect electronic interface between the Association and members, upon approval by the Commission.

(b) The NASD believes that the proposed rule change is consistent with the provisions of Sections 15A(b)(6),[8] and 15A(b)(7),[9] of the Act.[10] The proposed rule change will permit the NASD to request that members provide regulatory information in electronic form (where the member maintains its records in electronic form) and to establish electronic submission programs for regularly filed regulatory information, upon Commission approval. The proposed rule will also assist the Association in preventing

[2] The Association's findings are based on technology surveys conducted of the membership in connection with establishing electronic submission programs with respect to the filing of FOCUS Reports, Blue Sheet Reports, Short Interest Reports, Forms U–4 and U–5, and Free-Riding and Withholding Questionnaires, which electronic submission programs are more fully discussed below.

[3] Submission of information ''orally,'' as permitted by the Interpretation, is generally limited to situations where Association staff engage in a conversation with the member and information is elicited from the member in the course of the conversation.

[4] Providing an electronic copy of part or all of electronically stored information is less costly to the member in terms of personnel time and computer time than providing a hard copy printout or arranging for examining staff to review information on-line. The cost and time-saving advantages for broker-dealers of storing information in electronic media is recognized by the Commission in Securities Exchange Act Release No. 38245, Feb. 5, 1997; 62 FR 6469, Feb. 12, 1997.

[5] See, Securities Exchange Act Release No. 38245, Feb. 5, 1997; 62 FR 6469, Feb. 12, 1997.

[6] See, advice to the SEC regarding the electronic program for the Free-Riding and Withholding Questionnaire in correspondence dated March 1, and August 2, 1996 and announced in Notice to Members 96–18 (March 1996).

[7] The FOCUS Filing Plan was approved in Securities Exchange Act Rel. No. 29105 (April 18, 1991); 56 FR 19131 (April 25, 1991). The Short Interest Reporting requirement was permanently approved in Securities Exchange Act Rel. No. 23482 (July 30, 1986); 51 FR 28472 (Aug. 7, 1986). The Blue Sheet Reporting Plan was approved in Securities Exchange Act Rel. No. 26539 (Feb. 13, 1989); 54 FR 7318 (Feb. 17, 1989). The Central Registration Depository electronic filing requirements were approved in Securities Exchange Act Rel. No. 37439 (July 15, 1996); 61 FR 37950 (July 22, 1996).

[8] Section 15A(b)(6) requires the Association to prevent fraudulent and manipulative acts and practices, to promote just and equitable principles of trade and to protect investors and the public interest.

[9] Section 15A(b)(7) requires that the rules of the Association provide that its members and persons associated with its members shall be appropriately disciplined for violation of the rules of the MSRB or the rules of the Association.

[10] 15 U.S.C. § 78*o*–3.

fraudulent and manipulative acts and practices, in promoting just and equitable principles of trade, in protecting investors and the public interest, and in appropriately disciplining members for violations of its rules, the rules and regulations of the Commission, and the rules of the MSRB.

B. Self-Regulatory Organization's Statement on Burden on Competition

The NASD does not believe that the proposed rule change will result in any burden on competition that is not necessary or appropriate in furtherance of the purposes of the Act.

C. Self-Regulatory Organization's Statement on Comments on the Proposed Rule Change Received From Members, Participants, or Others

Written comments were neither solicited nor received.

III. Date of Effectiveness of the Proposed Rule Change and Timing for Commission Action

Within 35 days of the date of publication of this notice in the **Federal Register** or within such longer period (i) As the Commission may designate up to 90 days of such date if it finds such longer period to be appropriate and publishes its reasons for so finding or (ii) as to which the self-regulatory organization consents, the Commission will:

A. by order approve such proposed rule change, or

B. institute proceedings to determine whether the proposed rule change should be disapproved.

IV. Solicitation of Comments

Interested persons are invited to submit written data, views, and arguments concerning the foregoing. Persons making written submissions should file six copies thereof with the Secretary, Securities and Exchange Commission, 450 Fifth Street, NW., Washington, DC 20549. Copies of the submission, all subsequent amendments, all written statements with respect to the proposed rule change that are filed with the Commission, and all written communications relating to the proposed rule change between the Commission and any person, other than those that may be withheld from the public in accordance with the provisions of 5 U.S.C. 552, will be available for inspection and copying in the Commission's Public Reference Room. Copies of such filing will also be available for inspection and copying at the principal office of the NASD. All submissions should refer to the file number in the caption above and should be submitted by April 29, 1997.

For the Commission, by the Division of Market Regulation, pursuant to delegated authority, 17 CFR 200.30–3(a)(12).

Margaret H. McFarland,

Deputy Secretary.

[FR Doc. 97–8929 Filed 4–7–97; 8:45 am]

BILLING CODE 8010–01–M

SECURITIES AND EXCHANGE COMMISSION

[Release No. 34–38462; File No. SR–PSE–96–45]

Self-Regulatory Organizations; Order Approving Proposed Rule Change by the Pacific Stock Exchange Incorporated Relating to the Exchange's Lead Market Maker Options Book Pilot Program

April 1, 1997.

I. Introduction

On December 10, 1996, the Pacific Stock Exchange Incorporated (''PSE'' or ''Exchange'') filed with the Securities and Exchange Commission (''Commission''), pursuant to Section 19(b)(1) of the Securities Exchange Act of 1934 (''Act''),[1] and Rule 19b–4 thereunder[2] a proposal to expand the scope of its Lead Market Maker (''LMM'') Book Pilot Program to allow additional LMMs to participate and to allow a greater number of option issues to be eligible under the program. The proposal was published for comment in the **Federal Register** on February 19, 1997.[3] No comments were received on the proposal. This order approves the Exchange's proposal.

II. Description of the Proposal

On October 11, 1996, the Commission approved an Exchange proposal to adopt a one-year pilot program under which some LMMs are permitted to manage the options public limit order book (''Book'') in certain designated issues.[4] Under the pilot, the approved LMMs manage the Book function, take responsibility for trading disputes and errors, set rates for Book execution, and pay the Exchange a fee for systems and services.[5] The program allows LMMs to have greater control over their operations on the Exchange floor by allowing them, among other things, to set their own rates for execution services provided to customers.

Under the pilot as approved by the Commission, the program is limited to no more than three LMMs and no more than forty option symbols in total,[6] during a one-year pilot phase. The PSE is proposing to expand the scope of the program to allow additional LMMs to participate, and to allow a greater number of option issues to be eligible under the Program. Specifically, the Exchange proposed an expansion of the Book Pilot Program to allow for up to nine LMMs and up to 150 options symbols.

The LMMs who participate during the pilot phase are selected by the Options Floor Trading Committee based on certain designated factors.[7] Approved LMMs must maintain ''minimum net capital,'' as provided in Rule 15c3–1 under the Act,[8] and also must maintain a cash or liquid asset position of at least $500,000, plus $25,000 for each issue over five issues for which they perform the function of an OBO. Only multiply-traded option issues are eligible during the pilot phase.

III. Discussion

After careful consideration, the Commission finds that the Exchange's proposal to expand the Book Pilot Program is consistent with the requirements of the Act and the rules and regulations thereunder applicable to a national securities exchange in that the proposal is consistent with Section 6(b) of the Act,[9] in general, and Section 6(b)(5),[10] in particular, in that it is designed to facilitate transactions in securities, to promote just and equitable

---

[1] 15 U.S.C. § 78s(b)(1).

[2] 17 CFR 240.19b–4.

[3] Securities Exchange Act Release No. 38273 (February 12, 1997), 62 FR 7489.

[4] *See* Securities Exchange Act Release No. 37810 (October 11, 1996), 61 FR 54481 (''Pilot Approval Order'').

[5] More specifically, under the rule changes approved by the Commission, LMMs may perform all functions of the Order Book Official (''OBO'') in designated issues pursuant to Rules 6.51 through 6.59. In that regard, the Exchange will allow the LMM to utilize Exchange personnel to assist the LMM in performing the OBO function, and the Exchange will charge the LMM a reasonable fee for such use of Exchange personnel. If the program is made permanent, LMMs would be responsible for hiring and maintaining their own employees, but the Exchange would provide employees to assist LMMs when necessary due to market conditions. In all cases, however, employees working in the Book operation will be subject to all rules, policies, and procedures established by the Exchange. With regard to their duties as market makers, LMMs would be required to perform all obligations provided in Rules 6.35 through 6.40 and 6.82.

[6] Each option issue typically has only one symbol associated with it, unless LEAPs are traded on that issue, in which case there usually would be two additional symbols related to the issue, or unless a contract adjustment is necessary due, for example, to a merger or stock split, in which case one additional symbol usually would be added.

[7] *See* Pilot Approval Order, *supra* note 4.

[8] 17 CFR 240.15c3–1.

[9] 15 U.S.C. § 78f(b).

[10] 15 U.S.C. § 78f(b)(5).

principles of trade, and to protect investors and the public interest.[11] Allowing the PSE to appoint up to six additional LMMs to the Book Pilot Program and increasing the number of options symbols available to the program by 110 constitutes a reasonable and limited expansion of the Book Pilot Program. The expansion should provide the Exchange with sufficient experience administering the pilot in order to better determine whether the Book Pilot Program should be made permanent upon its scheduled expiration on October 31, 1997.[12]

As noted in the Pilot Approval Order, before the Book Pilot Program can be approved on a permanent basis, or further extended, the Exchange must provide the Commission, within 6 months prior to its expiration, with a report on the operation of the Book Pilot Program. Specifically, the PSE must submit an updated pilot program report by April 1997 that addresses: (1) Whether there have been any complaints regarding the operation of the pilot; (2) whether the PSE has taken any disciplinary or performance action against any member due to the operation of the pilot; (3) whether the PSE has reassigned any options issues traded pursuant to the pilot; and (4) the impact of the pilot on the bid/ask spreads, depth and continuity in PSE options markets.

IV. Conclusion

It is therefore ordered, pursuant to Section 19(b)(2) of the Act,[13] that the proposed rule change (File No. SR–PSE–96–45), is approved.

For the Commission, by the Division of Market Regulation, pursuant to delegated authority.[14]

Margaret H. McFarland,

Deputy Secretary.

[FR Doc. 97–8877 Filed 4–7–97; 8:45 am]

BILLING CODE 8010–01–M

[11] In approving the rule change, the Commission has considered the proposed rule changes' impact on efficiency, competition, and capital formation. 15 U.S.C. § 78c(f).

[12] The PSE has represented that it has experienced no operational problems and received no complaints regarding the operation of the Book Pilot Program. Telephone conversation between Janet W. Russell-Hunter, Special Counsel, Office of Market Supervision, Division of Market Regulation, SEC, and Michael D. Pierson, Senior Attorney, Regulatory Policy, PSE, April 1, 1997.

[13] 15 U.S.C. 78s(b)(2) (1988).

[14] 17 CFR 200.30–3(a)(12).

DEPARTMENT OF TRANSPORTATION

Federal Highway Administration

Environmental Impact Statement: San Mateo County, California

AGENCY: Federal Highway Administration (FHWA), DOT.

ACTION: Notice of Intent to supplement a final environmental impact statement.

SUMMARY: The FHWA is issuing this notice to advise the public that a supplement to a final environmental impact statement will be prepared for a proposed highway project in San Mateo County, California.

FOR FURTHER INFORMATION CONTACT: John R. Schultz, Chief, District Operations-North, Federal Highway Administration, 980 Ninth Street, Suite 400, Sacramento, California 95814–2724; Telephone: (916) 498–5041.

SUPPLEMENTARY INFORMATION: The FHWA, in cooperation with the California Department of Transportation (Caltrans), will prepare a supplement to the final environmental impact statement (EIS) on a proposal to improve State Route (SR) 1 in San Mateo County, California. The original final EIS for the improvements (FHWA–CA–EIS–83–14–F) was approved on April 16, 1986. The project study limits of alternatives considered in the final EIS extended from Half Moon Bay Airport, between Moss Beach and El Granada, on the south to Linda Mar Boulevard in Pacifica on the north, a distance of approximately 11.3 km (7 miles).

The preferred alternative, identified in the final EIS and selected in the Record of Decision signed on May 30, 1986, is known as the Martini Creek alignment alternative. From the southern end, this alternative begins north of the southern project study limit on SR 1, 0.2 km (0.1 mile) north of Montara near the Chart House Restaurant. From there it swings inland, crosses Martini Creek, curves seaward (west) and then northeasterly, proceeds over the San Pedro Mountain saddle and down into the City of Pacifica where it rejoins SR 1 at Linda Mar Boulevard. The proposed project is a two-land, controlled access facility; however, since the entire project on both sides of the summit exceeds six percent, the project design includes an uphill slow vehicle lane in each direction. The proposed project is approximately 7.2 km (4.5 miles) in length.

Litigation regarding the project was commenced in U.S. District Court in the Northern District of California in June 1986 (Sierra Club, et al. v. United States Department of Transportation, et al., Civ. No. 86–3384 DLJ). The project has been enjoined since September 1986, prior to the commencement of any construction. Ultimately, the District Court found that the final EIS was inadequate only in its discussion and analysis of noise impacts and required a re-analysis of those impacts, as set forth in the Court's Orders of April 3, 1989, and April 2, 1990. Thereafter, in 1995, FHWA and Caltrans prepared a limited supplemental EIS for the purpose of addressing the noise impact analysis deficiencies in the final EIS, as determined in the litigation.

Based on public comments received, the August 10, 1995 Record of Decision regarding the supplemental EIS included a commitment by the FHWA to address the issue of a tunnel alternative in the reevaluation of the 1986 final EIS. A tunnel alternative was considered earlier in the project development process, but has been withdrawn from active consideration prior to the issuance of the draft EIS that was the basis for the 1986 final EIS. The reevaluation was to be undertaken since major steps to advance the project had not occurred within three years after the approval of the final EIS. 23 CFR 771.129(b). The intent of the reevaluation of the final EIS was to determine whether or not new information or circumstances relevant to environmental concerns and bearing on the proposed project or its impacts would result in significant environmental impacts not evaluated in the final EIS. 23 CFR 771.130(a)(2).

In response to requests from local agencies and the public, Caltrans hired an independent consulting firm to conduct a tunnel feasibility study. Based upon the results of the tunnel feasibility report issued in October 1996, and the updated cost estimates for the revised highway bypass alternative (now $117 million), FHWA and Caltrans have determined that a tunnel alternative is a reasonable alternative for the proposed project that should be fully evaluated in the environmental process. Therefore, a second supplement to the 1986 final EIS will be prepared and will include an analysis of both the updated Martini Creek bypass alternative and a tunnel alternative. Since the purpose of a reevaluation is to determine whether or not the original EIS remains valid, FHWA's decision to prepare a full supplemental EIS (as compared with the 1995 supplemental EIS which was of limited scope) means that a reevaluation of the 1986 final EIS is no longer necessary.

In the meantime, on November 5, 1996, the voters of San Mateo County passed the Devil's Slide Tunnel Initiative known as Measure T. Passage of the Measure initiated the process to amend the County's land use plan portion of the San Mateo County certified Local Coastal Program (LCP) to provide a tunnel for motorized vehicles only behind Devil's Slide through San Pedro Mountain as the preferred alternative for Highway 1 around Devil's Slide, and to delete references to a two-lane bypass along the Martini Creek alignment. The Initiative required that the tunnel be designed consistent with restricting Route 1 to a 2-lane scenic highway using minimum state and federal tunnel standards, and that a separate trail for pedestrians and bicycles be provided outside the tunnel. The Measure also requires voter approval of any other alternative to the tunnel, except repair of the existing highway. On January 9, 1997, the California Coastal Commission voted unanimously to certify the LCP amendment as submitted by the County.

The proposed tunnel alternative is a 1,219 m (4,000-foot) long, double bore facility with one lane in each direction. The north approach road is about 457 m (1,500 feet) long, and the south approach road is about 305 m (1,000 feet) long. Proceeding south from Pacifica, the alignment departs from existing Route 1 along a 7% uphill grade, crosses the valley at Shamrock Ranch, passes through a small ravine, enters the tunnel beneath San Pedro Mountain, and exits the tunnel just south of the Devil's Slide area where it rejoins the existing highway.

Two tunnel design variations, a 9.1 m (30-foot) wide tunnel (variation A), and an 11.0 m 36-foot) wide tunnel (variation B), will be analyzed in the SEIS/EIR. The total project costs of tunnel variations A and B are estimated to be $125,950,000 and $130,294,000, respectively. Tunnel variation B allows pedestrian and bicycle access inside the tunnel, while variation A provides a pedestrian/bicycle path outside the tunnel. Even though tunnel variation B is not consistent with the County's recently revised LCP, this design must be considered until an economically and environmentally feasible bicycle/pedestrian path alignment outside the tunnel (variation A) has been established through the environmental process. Until such time, variation B will be analyzed as a viable option that retains bicycle and pedestrian continuity along Route 1.

Letters describing this proposed action and soliciting comments will be sent to appropriate Federal, State, and local agencies, and to private organizations and individuals that have previously expressed, or are known to have, an interest in this proposal. In addition, two formal public hearings will be held on the draft supplemental EIS; one in Half Moon Bay, and one in Pacifica. Public notice will be given of the exact time and place of the hearings. The draft supplemental EIS will be available for public and agency review and comment prior to the public hearings.

To ensure that the full range of issues related to this proposed action are addressed and that all significant issues are identified, comments and suggestions are invited from all interested parties. Comments or questions concerning this proposed action and the supplemental EIS should be directed to the FHWA at the address provided above.

(Catalog of Federal Domestic Assistance Program Number 20.205, Highway Research, Planning and Construction. The regulations implementing Executive Order 12372 regarding intergovernmental consultation on Federal programs and activities apply to this program)

Issued on: April 1, 1997.

G.P. Bill Wong,

Senior Transportation Engineer, Sacramento, California.

[FR Doc. 97–8948 Filed 4–7–97; 8:45 am]

BILLING CODE 4910–22–M

DEPARTMENT OF TRANSPORTATION

National Highway Traffic Safety Administration

[Docket No. 97–019; Notice 1]

Notice of Receipt of Petition for Decision That Nonconforming 1990 Mercedes-Benz 420 SEC Passenger Cars Are Eligible for Importation

AGENCY: National Highway Traffic Safety Administration, DOT.

ACTION: Notice of receipt of petition for decision that nonconforming 1990 Mercedes-Benz 420 SEC passenger cars are eligible for importation.

SUMMARY: This notice announces receipt by the National Highway Traffic Safety Administration (NHTSA) of a petition for a decision that a 1990 Mercedes-Benz 420 SEC that was not originally manufactured to comply with all applicable Federal motor vehicle safety standards is eligible for importation into the United States because (1) it is substantially similar to a vehicle that was originally manufactured for importation into and sale in the United States and that was certified by its manufacturer as complying with the safety standards, and (2) it is capable of being readily altered to conform to the standards.

DATES: The closing date for comments on the petition is May 8, 1997.

ADDRESSES: Comments should refer to the docket number and notice number, and be submitted to: Docket Section, Room 5109, National Highway Traffic Safety Administration, 400 Seventh St., SW., Washington, DC 20590. (Docket hours are from 9:30 a.m. to 4 p.m.)

FOR FURTHER INFORMATION CONTACT: George Entwistle, Office of Vehicle Safety Compliance, NHTSA (202–366–5306).

SUPPLEMENTARY INFORMATION:

Background

Under 49 U.S.C. 30141(a)(1)(A), a motor vehicle that was not originally manufactured to conform to all applicable Federal motor vehicle safety standards shall be refused admission into the United States unless NHTSA has decided that the motor vehicle is substantially similar to a motor vehicle originally manufactured for importation into and sale in the United States, certified under 49 U.S.C. 30115, and of the same model year as the model of the motor vehicle to be compared, and is capable of being readily altered to conform to all applicable Federal motor vehicle safety standards.

Petitions for eligibility decisions may be submitted by either manufacturers or importers who have registered with NHTSA pursuant to 49 CFR part 592. As specified in 49 CFR 593.7, NHTSA publishes notice in the **Federal Register** of each petition that it receives, and affords interested persons an opportunity to comment on the petition. At the close of the comment period, NHTSA decides, on the basis of the petition and any comments that it has received, whether the vehicle is eligible for importation. The agency then publishes this decision in the **Federal Register**.

Champagne Imports, Inc. of Lansdale, Pennsylvania (''Champagne'') (Registered Importer 90–009) has petitioned NHTSA to decide whether 1990 Mercedes-Benz 420 SEC passenger cars are eligible for importation into the United States. The vehicle which Champagne believes is substantially similar is the 1990 Mercedes-Benz 560 SEC that was manufactured for importation into, and sale in, the United States and certified by its manufacturer, Daimler Benz, A.G., as conforming to all applicable Federal motor vehicle safety standards.

The petitioner claims that it carefully compared the 1990 Mercedes-Benz 420 SEC to the 1990 Mercedes-Benz 560 SEC, and found the two vehicles to be substantially similar with respect to compliance with most Federal motor vehicle safety standards.

Champagne submitted information with its petition intended to demonstrate that the 1990 Mercedes-Benz 420 SEC, as originally manufactured, conforms to many Federal motor vehicle safety standards in the same manner as the 1990 Mercedes-Benz 560 SEC, or is capable of being readily altered to conform to those standards.

Specifically, the petitioner claims that the 1990 Mercedes-Benz 420 SEC is identical to the 1990 Mercedes-Benz 560 SEC with respect to compliance with Standards Nos. 102 *Transmission Shift Lever Sequence.* * * *, 103 *Defrosting and Defogging Systems,* 104 *Windshield Wiping and Washing Systems,* 105 *Hydraulic Brake Systems,* 106 *Brake Hoses,* 109 *New Pneumatic Tires,* 113 *Hood Latch Systems,* 116 *Brake Fluid,* 124 *Accelerator Control Systems,* 201 *Occupant Protection in Interior Impact,* 202 *Head Restraints,* 204 *Steering Control Rearward Displacement,* 205 *Glazing Materials,* 206 *Door Locks and Door Retention Components,* 207 *Seating Systems,* 209 *Seat Belt Assemblies,* 210 *Seat Belt Assembly Anchorages,* 212 *Windshield Retention,* 216 *Roof Crush Resistance,* 219 *Windshield Zone Intrusion,* and 302 *Flammability of Interior Materials.*

Petitioner also contends that the vehicle is capable of being readily altered to meet the following standards, in the manner indicated:

Standard No. 101 *Controls and Displays:* (a) Substitution of a lens marked ''Brake'' for a lens with a noncomplying symbol on the brake failure indicator lamp; (b) installation of a seat belt warning lamp that displays the appropriate symbol; (c) recalibration of the speedometer/odometer from kilometers to miles per hour.

Standard No. 108 *Lamps, Reflective Devices and Associated Equipment:* (a) Installation of U.S.-model headlamp assemblies; (b) installation of U.S.-model front and rear sidemarker/reflector assemblies; (c) installation of U.S.-model tail lamp assemblies; (d) installation of a high-mounted stop lamp.

Standard No. 110 *Tire Selection and Rims:* Installation of a tire information placard.

Standard No. 111 *Rearview Mirror:* Replacement of the convex passenger side rearview mirror.

Standard No. 114 *Theft Protection:* Installation of a warning buzzer microswitch in the steering lock assembly and a warning buzzer.

Standard No. 118 *Power Window Systems:* Rewiring of the power window system so that the window transport is inoperative when the ignition is switched off.

Standard No. 208 *Occupant Crash Protection:*

(a) Installation of a U.S. model seat belt in the driver's position, or a belt webbing actuated microswitch inside the driver's seat belt retractor; (b) installation of an ignition switch actuated seat belt warning lamp and buzzer; (c) replacement of the driver's side air bag and knee bolster with U.S. model components. The petitioner states that the vehicle is equipped with a combination lap and shoulder restraint that adjusts by means of an automatic retractor and releases by means of a single push button in each front designated seating position, and with a combination lap and shoulder restraint that releases by means of a single push button in each rear outboard designated seating position.

Standard No. 214 *Side Impact Protection*: Installation of reinforcing beams.

Standard No. 301 *Fuel System Integrity*: Installation of a rollover valve in the fuel tank vent line.

Additionally, petitioner contends that the bumpers on the non-U.S. certified 1990 Mercedes-Benz 420 SEC must be reinforced or replaced to comply with the Bumper Standard found in 49 CFR part 581.

The petitioner also states that a vehicle identification number plate must be affixed to the vehicle to meet the requirements of 49 CFR part 565.

Petitioner lastly states that prior to importation, the vehicle must be brought into compliance with the parts marking requirements of the Theft Prevention Standard found at 49 CFR part 541.

Interested persons are invited to submit comments on the petition described above. Comments should refer to the docket number and be submitted to: Docket Section, National Highway Traffic Safety Administration, Room 5109, 400 Seventh Street, SW., Washington, DC 20590. It is requested but not required that 10 copies be submitted.

All comments received before the close of business on the closing date indicated above will be considered, and will be available for examination in the docket at the above address both before and after that date. To the extent possible, comments filed after the closing date will also be considered. Notice of final action on the petition will be published in the **Federal Register** pursuant to the authority indicated below.

Authority: 49 U.S.C. 30141(a)(1)(A) and (b)(1); 49 CFR 593.8; delegations of authority at 49 CFR 1.50 and 501.8.

Issued on: April 3, 1997.

Marilynne Jacobs,

Director, Office of Vehicle Safety Compliance.

[FR Doc. 97–8921 Filed 4–7–97; 8:45 am]

BILLING CODE 4910–59–P

DEPARTMENT OF THE TREASURY

Departmental Offices

Debt Management Advisory Committee; Meeting

Notice is hereby given, pursuant to 5 U.S.C. App. sec. 10(a)(2), that a meeting will be held at the U.S. Treasury Department, 15th and Pennsylvania Avenue, NW., Washington, DC, on April 29 and 30, 1997, of the following debt management advisory committee:

Public Securities Association
Treasury Borrowing Advisory Committee

The agenda for the meeting provides for a technical background briefing by Treasury staff on April 29, followed by a charge by the Secretary of the Treasury or his designate that the committee discuss particular issues, and a working session. On April 30, the committee will present a written report of its recommendations.

The background briefing by Treasury staff will be held at 11:30 a.m. Eastern time on April 29 and will be open to the public. The remaining sessions on April 29 and the committee's reporting session on April 30 will be closed to the public, pursuant to 5 U.S.C. App. sec. 10(d).

This notice shall constitute my determination, pursuant to the authority placed in heads of departments by 5 U.S.C. App. sec. 10(d) and vested in me by Treasury Department Order No. 101–05, that the closed portions of the meeting are concerned with information that is exempt from disclosure under 5 U.S.C. 552b(c)(9)(A). The public interest requires that such meetings be closed to the public because the Treasury Department requires frank and full advice from representatives of the financial community prior to making its final decision on major financing operations. Historically, this advice has been offered by debt management advisory committees established by the several major segments of the financial community. When so utilized, such a

committee is recognized to be an advisory committee under 5 U.S.C. app. sec. 3.

Although the Treasury's final announcement of financing plans may not reflect the recommendations provided in reports of the advisory committee, premature disclosure of the committee's deliberations and reports would be likely to lead to significant financial speculation in the securities market. Thus, these meetings fall within the exemption covered by 5 U.S.C. 552b(c)(9)(A).

The Office of the Under Secretary for Domestic Finance is responsible for maintaining records of debt management advisory committee meetings and for providing annual reports setting forth a summary of activities and such other matters as may be informative to the public consistent with the policy of 5 U.S.C. 552b.

Dated: April 2, 1997.

John D. Hawke, Jr.,

Under Secretary (Domestic Finance).

[FR Doc. 97–8912 Filed 4–7–97; 8:45 am]

BILLING CODE 4810–25–M

DEPARTMENT OF THE TREASURY

Customs Service

[T.D. 97–20]

Tuna Fish—Tariff-Rate Quota; The Tariff-Rate Quota for Calendar Year 1997, on Tuna Classifiable Under Subheading 1604.14.20, Harmonized Tariff Schedule of the United States (HTSUS)

AGENCY: U.S. Customs Service, Department of the Treasury.

ACTION: Announcement of the quota quantity for tuna for Calendar Year 1997.

SUMMARY: Each year the tariff-rate quota for tuna fish described in subheading 1604.14.20, HTSUS, is based on the United States canned tuna production for the preceding calendar year.

EFFECTIVE DATES: The 1997 tariff-rate quota is applicable to tuna fish entered, or withdrawn from warehouse, for consumption during the period January 1 through December 31, 1997.

FOR FURTHER INFORMATION CONTACT: Cynthia Porter, Supervisor, Quota, Import Operations, Trade Compliance Division, Office of Field Operations, U.S. Customs Service, Washington, D.C. 20229, (202) 927–5399. It has now been determined that 35,662,163 kilograms of tuna may be entered for consumption or withdrawn from warehouse for consumption during the Calendar Year 1997, at the rate of 6 percent ad valorem under subheading 1604.14.20, HTSUS. Any such tuna which is entered, or withdrawn from warehouse, for consumption during the current calendar year in excess of this quota will be dutiable at the rate of 12.5 percent ad valorem under subheading 1604.14.30 HTSUS.

(OFO–TC:T:Q).

Dated: March 18, 1997.

George J. Weise,

Commissioner.

[FR Doc. 97–8866 Filed 4–7–97; 8:45 am]

BILLING CODE 4820–02–P

DEPARTMENT OF VETERANS AFFAIRS

Agency Information Collection Activities: Proposed Collection; Comment Request

AGENCY: National Cemetery System, Department of Veterans Affairs.

ACTION: Notice.

SUMMARY: As part of its continuing effort to reduce paperwork and respondent burden, the National Cemetery System (NCS) invites the general public and other Federal agencies to comment on this information collection. This request for comment is being made pursuant to the Paperwork Reduction Act of 1995 (Public Law 104–13; 44 U.S.C. 3506(c)(2)(A)). Comments should address the accuracy of the burden estimates and ways to minimize the burden including the use of automated collection techniques or the use of other forms of information technology, as well as other relevant aspects of the information collection.

DATES: Written comments and recommendations on the proposal for the collection of information should be received on or before June 9, 1997.

ADDRESSES: Direct all written comments to Frances Willis, National Cemetery System (402B2), Department of Veterans Affairs, 810 Vermont Avenue, NW., Washington, DC 20420. All comments will become a matter of public record and will be summarized in the NCS request for Office of Management and Budget (OMB) approval. In this document the NCS is soliciting comments concerning the following information collection:

OMB Control Number: 2900–0559.

Title: State Cemetery Data, VA Form 40–0241.

Type of Review: Reinstatement, without change, of a previously approved collection for which approval has expired.

Need and Uses: The information is collected annually and is used by the NCS's State Cemetery Grants Service to conduct studies. For example, the information is used to demonstrate to the States (especially those without state veterans cemeteries) not only the viability of the program, but to demonstrate that they have a need. In 1996 alone, for example, State cemeteries provided for burial of 11,280 veterans and eligible family members, nearly 16 percent of the total number of burials provided by VA national cemeteries. This can demonstrate that State cemeteries are needed and a demand exists for the services provided. The State Cemetery Grants Service is a user of the information as is the Field Operations Office of NCS and the Budget and Planning Service in Operations Support, NCS. States use this data as well as congressional offices, veterans organizations and interested citizens.

Current Actions: VA Form 40–0241 is used to collect information regarding the number of interments conducted at state veterans cemeteries each year. This information is necessary for budget and oversight purposes. In addition, NCS's State Cemetery Grants Service needs the information to answer questions which arise during the course of the year to respond to Congressional correspondence and to project and predict the need for burial space and the demand for state grants. Burial information provides the usage rates and helps in the prediction of when a cemetery needs to develop additional acreage (request a grant to expand) or is going to close. The amount of acreage used helps the State Cemetery Grants Service and National Cemetery System anticipate closing and the requirement for additional cemeteries (either state or national). Lower burial rates may indicate problems such as ineffective outreach or poor maintenance that should be investigated. The information is used in conjunction with the information gained from the national cemeteries to consider where to place national or state cemeteries. 38 CFR, Section 39.3, points out that ''the Secretary and any authorized representative (in this case the State Cemetery Grants Service) will have access to and the right to examine all records, books, papers or documents related to the grant.'' 38 CFR, Section 39.5, discusses follow-up procedures once a cemetery is established and points out the need for audits.

Affected Public: State, Local or Tribal Government.

Estimated Annual Burden: 52 hours.

Estimated Average Burden Per Respondent: 1 hour.

Frequency of Response: Annually.

Estimated Number of Respondents: 52.

FOR FURTHER INFORMATION CONTACT: Requests for additional information or copies of the form should be directed to Department of Veterans Affairs, Attn: Frances L. Willis, National Cemetery System (402B2), 810 Vermont Avenue, NW., Washington, DC 20420, Telephone (202) 273–5189.

Dated: March 19, 1997.

By direction of the Secretary.

Donald L. Neilson,

Director, Information Management Service.

[FR Doc. 97–8857 Filed 4–7–97; 8:45 am]

BILLING CODE 8320–01–P

DEPARTMENT OF VETERANS AFFAIRS

Agency Information Collection: Submission for OMB Review; Comment Request

AGENCY: Veterans Benefits Administration, Department of Veterans Affairs.

ACTION: Notice.

SUMMARY: The Veterans Benefits Administration (VBA), Department of Veterans Affairs, has submitted to the Office of Management and Budget (OMB) the following proposal for the collection of information under the provisions of the Paperwork Reduction Act (44 U.S.C. Chapter 35).

OMB Control Number: 2900–0002.

Title and Form Number: Income-Net Worth and Employment Statement, VA Form 21–527.

Type of Review: Revision of a currently approved collection.

Need and Uses: The form is used by the claimant to submit a supplemental claim for disability pension or disability compensation based on individual unemployability. The information is necessary to determine eligibility to these benefits. The form is being revised to request additional information for purposes of Electronic Funds Transfer (EFT).

Affected Public: Individuals or households.

Estimated Annual Burden: 104,440 hours.

Estimated Average Burden Per Respondent: 60 minutes.

Frequency of Response: On occasion.

Estimated Number of Respondents: 104,440.

ADDRESSES: A copy of this submission may be obtained from Ron Taylor, Information Management Service (045A4), Department of Veterans Affairs, 810 Vermont Avenue, NW., Washington, DC 20420, (202) 273–8015.

Comments and recommendations concerning this submission should be directed to VA's OMB Desk Officer, Allison Eydt, OMB Human Resources and Housing Branch, New Executive Office Building, Room 10235, Washington, DC 20503 (202) 395–4650. Do not send requests for benefits to this address.

DATES: Comments on the information collection should be directed to the OMB Desk Officer on or before May 8, 1997.

FOR FURTHER INFORMATION CONTACT: Ron Taylor, Information Management Service (045A4), (202) 273–8015.

Dated: March 19, 1997.

By direction of the Secretary.

Donald L. Neilson,

Director, Information Management Service.

[FR Doc. 97–8855 Filed 4–7–97; 8:45 am]

BILLING CODE 8320–01–P

DEPARTMENT OF VETERANS AFFAIRS

Agency Information Collection: Submission for OMB Review; Comment Request

AGENCY: Veterans Benefits Administration, Department of Veterans Affairs.

ACTION: Notice.

SUMMARY: The Veterans Benefits Administration (VBA), Department of Veterans Affairs, has submitted to the Office of Management and Budget (OMB) the following proposal for the collection of information under the provisions of the Paperwork Reduction Act (44 U.S.C. Chapter 35).

OMB Control Number: 2900–0209.

Title and Form Number: Application for Work-Study Allowance, VA Form 22–8691.

Type of Review: Revision of a currently approved collection.

Need and Uses: The form is needed to identify those veteran-students who wish to apply for the supplemental VA work-study allowance and to assist VA in selecting eligible applicants.

Affected Public: Individuals or households.

Estimated Annual Burden: 4,641 hours.

Estimated Average Burden Per Respondent: 10 minutes.

Frequency of Response: On occasion.

Estimated Number of Respondents: 27,848.

ADDRESSES: A copy of this submission may be obtained from Ron Taylor, Information Management Service (045A4), Department of Veterans Affairs, 810 Vermont Avenue, NW., Washington, DC 20420, (202) 273–8015.

Comments and recommendations concerning this submission should be directed to VA's OMB Desk Officer, Allison Eydt, OMB Human Resources and Housing Branch, New Executive Office Building, Room 10235, Washington, DC 20503 (202) 395–4650. Do not send requests for benefits to this address.

DATES: Comments on the information collection should be directed to the OMB Desk Officer on or before May 8, 1997.

FOR FURTHER INFORMATION CONTACT: Ron Taylor, Information Management Service (045A4), (202) 273–8015.

Dated: March 19, 1997.

By direction of the Secretary.

Donald L. Neilson,

Director, Information Management Service.

[FR Doc. 97–8856 Filed 4–7–97; 8:45 am]

BILLING CODE 8320–01–P

Corrections

Federal Register
Vol. 62, No. 67
Tuesday, April 8, 1997

This section of the FEDERAL REGISTER contains editorial corrections of previously published Presidential, Rule, Proposed Rule, and Notice documents. These corrections are prepared by the Office of the Federal Register. Agency prepared corrections are issued as signed documents and appear in the appropriate document categories elsewhere in the issue.

DEPARTMENT OF COMMERCE

National Oceanic and Atmospheric Administration

[I.D. 022497B]

Endangered Species; Permits

Correction

In notice document 97–5047 appearing on page 9179 in the issue of Friday, February 28, 1997, in the second column, in the **DATES** section, the date ''April 29, 1997'' should read ''March 31, 1997''.

DEPARTMENT OF ENERGY

Federal Energy Regulatory Commission

[Project No. 2085-004]

Southern California Edison Company; Notice of Availability of Final Environmental Assessment

Correction

In notice document 97–8146 appearing on page 15476 in the issue of Tuesday, April 1, 1997 make the following correction:

In the second column, the docket number should appear as set forth above.

BILLING CODE 1505-01-D

DEPARTMENT OF ENERGY

Federal Energy Regulatory Commission

[Docket No. RP92–137–044]

Transcontinental Gas Pipe Line Corporation; Notice of Compliance Filing

Correction

In notice document 97–8322, appearing on page 15674 in the issue of Wednesday, April 2, 1997, the docket number should appear as set forth above.

BILLING CODE 1505-01-D

DEPARTMENT OF TRANSPORTATION

Federal Aviation Administration

14 CFR Part 61

[Docket No. 26933; Amendment Nos. 61-101, 121-263, 135-67, 142-1]

RIN 2120-AA83

Aircraft Flight Simulator Use in Pilot Training, Testing, and Checking at Training Centers: Editorial and Other Changes

Correction

In rule document 97–7322 beginning on page 13788, in the issue of Friday, March 21, 1997, make the following corrections:

1. On page 13789, in the second column, in the third paragraph, in the fourth line, ''§ § 121.414'' should read ''§ § 121.411 through 121.414''.

2. On the same page, in the third column, in the last paragraph, in the ninth line, ''111034'' should read ''11034''.

§ 61.64 [Corrected]

3. On page 13790, in the third column, in § 61.64(e)(10), in the second line, ''(3)(9)(ii)'' should read ''(e)(9)(ii)''.

§ 61.129 [Corrected]

4. On the same page, in the same column, in § 61.129(b), in the third line, ''and'' should read ''an''.

5. On the page 13791, in the first column, in § 61.129(b)(1)(ii), in the first line, ''light'' should read ''flight''. And in the third line, after ''in'' insert ''an''.

6. On the same page, in the same column, in § 61.129(b)(2)(i), in the fourth line, ''receiving'' should read ''received''.

BILLING CODE 1505-01-D

DEPARTMENT OF TRANSPORTATION

Federal Aviation Administration

14 CFR Parts 107 and 108

[Docket No. 28859; Notice No. 97-4]

RIN 2120-AG32

Employment History, Verification and Criminal History Records Check

Correction

In proposed rule document 97–6947 beginning on page 13262 in the issue of Wednesday, March 19, 1997 make the following corrections:

(1) On page 13267, in the first column, in the penultimate paragraph, in the first line ''quanti--'' should read ''quantified --''.

(2) On the same page, in the second column, under **Initial Regulatory Flexibility Determination**, in the second paragraph, in the sixth line ''is not'' should read ''is one''.

BILLING CODE 1505-01-D

federal register

Tuesday
April 8, 1997

Part II

Department of the Treasury

Internal Revenue Service

26 CFR Part 54

Department of Labor

Pension and Welfare Benefits Administration

29 CFR Part 2590

Department of Health and Human Services

Health Care Financing Administration

45 CFR Subtitle A, Parts 144 and 146

45 CFR Part 148

Health Insurance Portability for Group Health Plans; Interim Rules and Proposed Rule

DEPARTMENT OF THE TREASURY

Internal Revenue Service

26 CFR Part 54

[T.D. 8716]

RIN 1545–AV05

DEPARTMENT OF LABOR

Pension and Welfare Benefits Administration

29 CFR Part 2590

RIN 1210–AA54

DEPARTMENT OF HEALTH AND HUMAN SERVICES

Health Care Financing Administration

45 CFR Subtitle A, Parts 144 and 146

RIN 0938–AI08

Interim Rules for Health Insurance Portability for Group Health Plans

AGENCIES: Internal Revenue Service, Department of the Treasury; Pension and Welfare Benefits Administration, Department of Labor; Health Care Financing Administration, Department of Health and Human Services.

ACTION: Interim rules with request for comments.

SUMMARY: This document contains interim rules governing access, portability and renewability requirements for group health plans and issuers of health insurance coverage offered in connection with a group health plan. The rules contained in this document implement changes made to certain provisions of the Internal Revenue Code of 1986 (Code), the Employee Retirement Income Security Act of 1974 (ERISA), and the Public Health Service Act (PHS Act) enacted as part of the Health Insurance Portability and Accountability Act of 1996 (HIPAA). Interested persons are invited to submit comments on the interim rules for consideration by the Department of Health and Human Services, the Department of Labor, and the Department of the Treasury (Departments) in developing final rules. The rules contained in this document are being adopted in an interim basis to accommodate statutorily established time frames intended to ensure that sponsors and administrators of group health plans, participants and beneficiaries, States, and issuers of group health insurance coverage have timely guidance concerning compliance with the recently enacted requirements of HIPAA.

DATES: *Effective date:* These interim rules are effective on June 7, 1997.

Comment dates: Written comments on these interim rules are invited and must be received by the Departments on or before July 7, 1997.

Applicability dates: For group health plans maintained pursuant to one or more collective bargaining agreements ratified before August 21, 1996, the rules (other than the certification requirements) do not apply to plan years beginning before the later of July 1, 1997 or the date on which the last collective bargaining agreement relating to the plan terminates without regard to any extension agreed to after August 21, 1996.

The rules implementing the certification provisions do not require any action to be taken before June 1, 1997, although certain certification requirements apply to periods of coverage and events that occur after June 30, 1996. The certification requirement for events that occurred on or after October 1, 1996 and before June 1, 1997 may be satisfied using an optional notice described in this preamble.

Information collection: Affected parties do not have to comply with the information collection requirements in these interim rules until the Departments publish in the **Federal Register** the control numbers assigned by the Office of Management and Budget (OMB) to these information collection requirements. Publication of the control numbers notifies the public that OMB has approved these information collection requirements under the Paperwork Reduction Act of 1995. The Departments have asked for OMB clearance as soon as possible, and OMB approval is anticipated by the applicable effective date.

ADDRESSES: Written comments should be submitted with a signed original and three copies to any of the addresses specified below. All comments will be available for public inspection and copying in their entirety. Interested persons are invited to submit written comments on these interim rules to:

Health Care Financing Administration, Department of Health and Human Services, Attention: [BPD–890–IFC], P.O. Box 26688, Baltimore, Maryland 21207

Pension and Welfare Benefits Administration, U.S. Department of Labor, Room N–5669, 200 Constitution Avenue, NW., Washington, DC 20210. Attention: Interim Portability and Renewability Rules

CC:DOM:CORP:T:R (REG–253578–96), Room 5228, Internal Revenue Service, POB 7604, Ben Franklin Station, Washington, DC 20044

Alternatively, comments may be submitted electronically via the Internet by selecting the ''Tax Regs'' option on the IRS Home Page, or by submitting comments directly to the IRS Internet site at http://www.irs.ustreas.gov/tax__regs/comments.html

In the alternative:

Written comments for the Department of Health and Human Services may be hand delivered from 8:30 a.m. to 5:00 p.m. to:

Room 309–G, Hubert Humphrey Building, 200 Independence Avenue, SW., Washington, DC 20201, or

Room C5–09–26, 7500 Security Boulevard, Baltimore, Maryland 21244–1850

Written comments for the Department of Labor may be hand delivered from 8:15 a.m. to 4:45 p.m. to the above address for the Pension and Welfare Benefits Administration, U.S. Department of Labor.

Written comments for the Internal Revenue Service may be hand delivered between the hours of 8 a.m. and 5 p.m. to:

CC:DOM:CORP:T:R(REG–253578–96), Courier's Desk, Internal Revenue Service, room 5228, 1111 Constitution Avenue, NW., Washington, DC.

All submissions to the Department of Health and Human Services will be open to public inspection as they are received, generally beginning three weeks after publication, in room 309–G of the Department of Health and Human Services offices at 200 Independence Avenue, SW., Washington, DC, from 8:30 a.m. to 5:00 p.m. All submissions to the Department of Labor will be open to public inspection at the Public Documents Room, Pension and Welfare Benefits Administration, U.S. Department of Labor, Room N–5638, 200 Constitution Avenue NW., Washington, DC, from 8:30 a.m. to 5:30 p.m. All submissions to the Internal Revenue Service will be open to public inspection and copying in room 1621, 1111 Constitution Avenue, NW., Washington, DC, from 9:00 a.m. to 4:00 p.m.

FOR FURTHER INFORMATION CONTACT: Julie Walton, Health Care Financing Administration, at 410–786–1565; Mark Connor, Office of Regulations and Interpretations, Pension and Welfare Benefits Administration, Department of Labor, at 202–219–4377; Diane Pedulla, Plan Benefits Security Division, Office of the Solicitor, Department of Labor, at 202–219–4377; or Russ Weinheimer, Internal Revenue Service, at 202–622–

4695. These are not toll-free numbers.

CUSTOMER SERVICE INFORMATION: Individuals interested in obtaining a copy of the Department of Labor's booklet entitled ''Questions and Answers: Recent Changes in Health Care Law'' may obtain a copy by calling the following toll-free number 1–800–998–7542.

SUPPLEMENTARY INFORMATION:

A. Background

The Health Insurance Portability and Accountability Act of 1996 (HIPAA), Pub. L. 104–191, was enacted on August 21, 1996. HIPAA amended the Public Health Service Act (PHS Act), the Employee Retirement Income Security Act of 1974 (ERISA), and the Internal Revenue Code of 1986 (Code) to provide for, among other things, improved portability and continuity of health insurance coverage in the group and individual insurance markets, and group health plan coverage provided in connection with employment. Sections 102(c)(4), 101(g)(4), and 401(c)(4) of HIPAA require the Secretaries of Health and Human Services, Labor, and the Treasury, each to issue regulations necessary to carry out these provisions.[1]

B. Overview of HIPAA and the Interim Rules

Area of Guidance. The access, portability, and renewability provisions of HIPAA affect group health plans and health insurance issuers. Group health plans are generally plans sponsored by employers or employee organizations or both. These HIPAA provisions are designed to improve the availability and portability of health coverage by:

- Limiting exclusions for preexisting medical conditions;
- Providing credit for prior health coverage and a process for transmitting certificates and other information concerning prior coverage to a new group health plan or issuer;
- Providing new rights that allow individuals to enroll for health coverage when they lose other health coverage or have a new dependent;
- Prohibiting discrimination in enrollment and premiums against employees and their dependents based on health status;
- Guaranteeing availability of health insurance coverage for small employers and renewability of health insurance coverage in both the small and large group markets; and
- Preserving, through narrow preemption provisions, the States' traditional role in regulating health insurance, including State flexibility to provide greater protections.

The regulations provide guidance with respect to these provisions. In implementing these new rules, the regulations provide protections for individuals seeking health coverage while minimizing burdens on employers and insurers.

Reducing Burdens. The regulations reduce burdens by:

- Providing for a simple model certificate that can be used by plans and issuers;
- Reducing unnecessary duplication in the issuance of certificates;
- Including flexible rules for dependents to receive the coverage information they need;
- Allowing coverage information to be provided by telephone if all parties agree;
- Relieving plans and issuers of the need to report the starting date of coverage and waiting period information where a certificate shows 18 months of credible coverage;
- Including a transition rule permitting plans and issuers to give individuals a notice in lieu of a certificate where coverage ended before June 1, 1997; and
- Providing for a model notice that may be used to satisfy the transition rule and a model notice for information relating to categories of benefits provided under a plan.

Implementing Individual Protections. The regulations protect and assist participants and their dependents by:

- Ensuring that individuals are notified of the length of time that a preexisting condition exclusion clause in any new health plan may apply to them after taking into account their prior creditable coverage;
- Ensuring that individuals are notified of their rights to special enrollment under a plan;
- Permitting individuals to obtain a certificate before coverage under a plan ceases; and
- Creating practical ways for individuals to demonstrate creditable coverage to a new plan (where the individual's prior plan fails to provide the certificate).

C. Overview of Coordination of Group Market Regulation Among Departments

The HIPAA portability provisions relating to group health plans and health insurance coverage offered in connection with group health plans (referred to below as the ''group market'' provisions) are set forth under a new Part A of Title XXVII of the PHS Act, a new Part 7 of Subtitle B of Title I of ERISA, and a new Subtitle K of the Internal Revenue Code. HIPAA also added provisions governing insurance in the individual market that are contained only in the PHS Act, and thus are not within the regulatory jurisdiction of the Department of Labor or the Department of the Treasury. (These portability provisions are referred to below as the ''individual market'' provisions.)

In general, the group market provisions create concurrent jurisdiction for the Secretaries of Health and Human Services, Labor, and the Treasury. The provisions include similar rules relating to preexisting conditions exclusions, special enrollment rights, and prohibition of discrimination against individuals based on health status-related factors. (These group market provisions are referred to below as the ''shared group market'' provisions.) Accordingly, the three Departments share regulatory responsibility for most, but not all, of the group market provisions.

The shared group market provisions are substantially similar, except as follows:

- The shared group market provisions in the PHS Act apply generally to insurance issuers that offer health insurance in connection with group health plans (subject to an exception that may apply for plans with fewer than two participants who are current employees (''very small plans'')), and certain State and local government plans. Only the PHS Act contains group market provisions relating to availability and renewability of health insurance.[2] In addition, the PHS Act imposes certification requirements on certain federal entities not otherwise subject to the HIPAA portability provisions. Further, the States, in the first instance, will enforce the PHS Act with respect to issuers. In addition, individuals may be able to pursue claims through State mechanisms. Only if a State does not substantially enforce any provisions under its insurance laws, will the Department of Health and Human Services enforce the provisions, through the imposition of civil money penalties. (The group market provisions relating to guaranteed renewability for multiemployer plans and multiple employer welfare arrangements

[1] In addition to the group market regulations in this document, the Department of the Treasury is issuing a proposed Treasury regulation that cross-references these regulations and the Department of Labor is issuing an interim regulation relating to certain disclosure requirements under HIPAA. Each of these regulations appears separately in this issue of the **Federal Register**.

[2] The PHS Act does not include requirements on availability of insurance for employers in the large group market. Under section 2711(b)(3) of the PHS Act, however, the General Accounting Office (GAO) is to report to Congress on such availability in 1998.

(MEWAs) are in ERISA and the Internal Revenue Code, but not the PHS Act.)

- The ERISA shared group market provisions apply generally to all group health plans other than governmental plans, church plans, very small plans, and certain other plans. The shared group market provisions of ERISA also apply to health insurance issuers that offer health insurance in connection with such group health plans. Generally, the Secretary of Labor enforces the Provisions of HIPAA that amend ERISA, except that no enforcement action may be taken by the Secretary against issuers relating to the new shared group market provisions in part 7 of ERISA. However, individuals may generally pursue actions against issuers under ERISA and, in some circumstances, under State laws.
- The shared group market provisions in the Internal Revenue Code generally apply to all group health plans other than governmental plans and very small plans, but not to health insurance issuers. A taxpayer that fails to comply with these provisions may be subject to an excise tax under section 4980D of the Code. (The group market provisions relating to preemption and affiliation periods for HMOs are in the PHS Act and ERISA, but not in the Internal Revenue Code.)

The regulation being issued today by the Secretaries of Health and Human Services, Labor, and the Treasury have been developed on a coordinated basis by the Departments. Except to the extent needed to reflect the statutory differences described above, the shared group market provisions in these regulations of each Department are substantively identical. However, there are certain nonsubstantive differences. The PHS Act regulations are numbered and organized differently. Also, there are differences in the regulations that are necessary because of statutory provisions that are not common to all three Departments (in the definitions sections, for example). Further, the regulations reflect certain stylistic differences in language and structure to conform to conventions used by a particular Department. These differences have been minimized and any differences in wording are not intended to create any substantive difference, so that these regulations will have the same effect with respect to overlapping statutory provisions, as required by section 104 of HIPAA.

D. Special Information Concerning State Insurance Law

For purposes of the PHS Act and sections 144 through 148 in the PHS Act regulations, all health insurance coverage in a State generally is sold in one of two markets: the group market (See section 146) and the individual market (see section 148). The group market is further divided into the large group market and the small group market. Section 146 of the PHS Act regulations applies the group market provisions only to insurance sold to group health plans (which are generally plans sponsored by employers or employee organizations or both), regardless of whether State law provides otherwise. State law may expand the definition of the small group market to include certain coverage that, under the federal law, would otherwise be considered coverage in the large group market or the individual market.

The protections provided in the PHS Act to particular individuals and employers are different depending on whether the coverage involved is obtained in the small group market, the large group market, or the individual market. Small employers are guaranteed availability of insurance coverage sold in the small group market under the PHS Act. Small and large employers are guaranteed the right to renew their group coverage under the PHS Act, subject to certain exceptions. Eligible individuals are guaranteed availability of coverage sold in the individual market under the PHS Act, and all coverage in the individual market must be guaranteed renewable under the PHS Act.

Coverage that is provided to associations, but is not related to employment (so that the coverage is not in connection with a group health plan), is not coverage in the group market under HIPAA. This coverage is instead coverage in the individual market under the PHS Act, regardless of whether it is considered group coverage under State law.

E. Discussion of the Shared Group Market Provisions in the Regulations

The most significant items relating to the shared group market in these regulations are discussed in detail below.

Definitions—26 CFR 54.9801–2, 29 CFR 2590.701–2, 45 CFR 144.103

This section provides most of the definitions used in the regulations implementing the provisions of HIPAA that were added to the PHS Act, ERISA, and the Code, relating to the group market.[3] The definitions in this section of the regulations include both statutory definitions provided in HIPAA, as well as certain others used in the regulations.

Limitation on Preexisting Condition Exclusion Period—26 CFR 54.9801–3, 29 CFR 2590.71–3, 45 CFR 146.111

Definition of Preexisting Condition Exclusion

A preexisting condition exclusion is defined broadly to be any limitation or exclusion of benefits based on the fact the condition was present before the first day of coverage, whether or not any medical advice, diagnosis, care, or treatment was recommended or received before that day. HIPAA imposes certain limitations (described below) on the use of such an exclusion in the group market (and also uses this definition for purposes of the individual market rules, under which no preexisting condition exclusion is permitted to be imposed on an eligible individual). HIPAA's broad definition of a preexisting condition exclusion is at variance with some State laws and regulations because the relevant National Association of Insurance Commissioners (NAIC) models, on which many State laws are based, have imposed limitations on coverage for preexisting conditions without use of such a definition.

New Limitations on Preexisting Condition Exclusions. Paragraph (a) of this section[4] of the regulations describes the limitations on the preexisting condition exclusion period. A group health plan, and a health insurance issuer offering group health insurance coverage, is permitted to impose a preexisting condition exclusion with respect to a participant or beneficiary only if the following conditions are met:

1. *6-month look-back rule.* The preexisting condition exclusion must relate to a condition (whether physical or mental, and regardless of the cause of the condition) for which medical advice, diagnosis, care, or treatment was recommended or received within the 6-month period ending on the enrollment date. For these purposes, genetic information is not a condition.[5] In order

[3] The regulations for the PHS Act also contain certain definitions relating to those provisions added under the PHS Act regarding the individual market, in order to create a single, comprehensive reference for the definitions necessary under the PHS Act regulations.

[4] References to paragraphs of a section refer to paragraphs of each regulation section identified in the heading. For example, this reference is to paragraph (a) in each of 45 CFR 146.111, 29 CFR 2590.701–3, and 26 CFR 54.9801–3.

[5] The definition of genetic information in the regulations was developed taking into account hearing testimony related to genetic information given in connection with Senate Report 104–156, other legislative initiatives, and public comments (including those submitted in response to the request for information published by the Departments on December 30, 1996).

to be taken into account, the medical advice, diagnosis, care, or treatment must have been recommended or received from an individual licensed or similarly authorized to provide such services under State law and operating within the scope of practice authorized by the State law. Under the new HIPAA standard, a plan would generally determine that an individual has a preexisting condition through medical records (such as diagnosis codes on bills, a physician's notes of a visit or telephone call, pharmacy prescription records, HMO encounter data, or other records indicating that medical services were actually recommended or received during the 6-month look-back period). The ''prudent person'' standard of some State laws (under which a condition is taken into account if a prudent person would have sought care whether or not care is actually received) no longer may be used to determine a preexisting condition.

This 6-month ''look-back'' period is based on the 6-month ''anniversary date'' of the enrollment date. As a result, an individual whose enrollment date is August 1, 1998 has a 6-month look-back period from February 1, 1998 through July 31, 1998.

2. *Length of preexisting condition exclusion period.* The exclusion period cannot extend for more than 12 months (18 months for late enrollees) after the enrollment date. the 12- or 18-month ''look-forward'' period is also based on the anniversary date of the enrollment date. A late enrollee is defined as an individual who enrolls in a plan at a time other than at the first time the individual is eligible to enroll or during a special enrollment period (described below). If an individual loses eligibility for coverage as a result of terminating employment or a general suspension of coverage under the plan, then upon becoming eligible again due to resumption of employment or due to resumption of plan coverage, only the most recent period of eligibility is considered for purposes of determining whether the individual is a late enrollee.

3. *Reduction of preexisting condition exclusion period by prior coverage.* In general, the preexisting condition exclusion period is reduced by the individual's days of creditable coverage [6] as of the enrollment date. Creditable coverage is defined as coverage of an individual from a wide range of specified sources, including group health plans, health insurance coverage, Medicare, and Medicaid.

Definition of Enrollment Date. The limitations on preexisting condition exclusions are measured from an individual's ''enrollment date.'' The enrollment date is defined as the first day of coverage or, if there is a waiting period, the first day of the waiting period (typically the date employment begins).

The term ''first day of coverage'' is used in the regulations in place of the term ''date of enrollment'' in the statute, such as in the definitions of the terms ''preexisting condition exclusion'' and ''enrollment date.'' This is intended to clarify the difference between the statutory terms ''date of enrollment'' and ''enrollment date'' (which have no difference in common useage).

The term ''waiting period'' generally refers to the period in which there is a delay between the first day of employment and the first day of coverage under the plan. Accordingly, because the preexisting condition exclusion period runs from the enrollment date, any waiting period would run concurrently with any preexisting condition exclusion period. Further:

- The enrollment date for a late enrollee or anyone who enrolls on a special enrollment date (see the section on special enrollment periods below) is the first date of coverage. Thus, the time between the date a late enrollee or special enrollee first becomes eligible for enrollment under the plan and the first day of coverage is not treated as a waiting period.
- Because the 6-month look-back limitation runs from the beginning of any applicable waiting period, the current practice of some plans that require physical examinations prior to commencement of coverage for the purpose of identifying preexisting conditions may be affected. If the examination is conducted during the waiting period (after employment begins and before enrollment), rather than before employment begins, a plan may not exclude coverage for any condition identified in the examination (unless, independent of the examination, medical advice, diagnosis, care, or treatment was in fact recommended or received for the condition during the 6-month look-back period). The use of such examinations for other purposes, such as worker safety, is not affected.[7]

Elimination of Preexisting Condition Exclusion for Pregnancy and for Certain Children. A preexisting condition exclusion cannot apply to pregnancy. In addition, a preexisting condition exclusion period cannot be applied to a newborn, an adopted child under age 18, or a child placed for adoption under age 18, if the child becomes covered within 30 days of birth, adoption, or placement for adoption. This exception does not apply after the child has a significant break in coverage (63 or more consecutive days). (An example in paragraph (b)(1) of the regulations illustrates these rules.)

Rules Relating to Creditable Coverage—26 CFR 54.9801–4, 29 CFR 2590.701–4, 45 CFR 146.113

As noted above, a plan or issuer that imposes a preexisting condition exclusion must reduce the length of the exclusion by an individual's creditable coverage. This section defines the term ''creditable coverage'' and sets forth the rules for how creditable coverage is applied to reduce such an exclusion period.

Creditable coverage includes health insurance coverage and other health coverage, such as coverage under group health plans (whether or not provided through an issuer), Medicaid, Medicare, and public health plans, as well as other types of coverage set forth in HIPAA and the regulations. Comments are requested on whether the definition of a public health plan should include the public health systems of other countries.

Under the definition of creditable coverage, all forms of health insurance coverage are included, whether in the individual market or group market, and whether the coverage is short-term, limited-duration coverage or other coverage for benefits for medical care for which no certificate of creditable coverage is required. Creditable coverage does not include coverage consisting solely of excepted benefits as defined in the regulations and described below.[8]

Under paragraph (a)(3) of this section of the regulation, a group health plan or health insurance issuer offering group

[6] The phrase ''days of creditable coverage'' is used instead of the statutory phrase ''aggregate periods of creditable coverage'' for administrative ease in the calculation of creditable coverage. Use of days of creditable coverage also conforms to the practice of many States for crediting prior coverage under pre-HIPAA small group market reforms.

[7] However, to avoid violating the Americans with Disabilities Act, Pub. L. 101–336, as amended by Pub. L. 102–166, the examination should generally be conducted only after the employer has offered employment to the individual.

[8] However, if an individual has coverage of excepted benefits in addition to other forms of creditable coverage, coverage of excepted benefits is creditable coverage. This would make a difference only if a plan or issuer uses the alternative method of determining creditable coverage (described below) with respect to a category that includes excepted benefits. For example, coverage of excepted benefits such as limited vision or limited dental benefits, when offered in combination with other creditable coverage, may be used to offset a preexisting condition exclusion period for a category that includes those benefits under the alternative method in paragraph (c).

health insurance coverage may determine the amount of creditable coverage of an individual for purposes of reducing the period of a preexisting condition exclusion by using either the standard method described in paragraph (b) or the alternative method described in paragraph (c).

Standard Method

1. *Counting.* Under the standard method, the plan or issuer determines the amount of an individual's creditable coverage by determining all days during which the individual had one or more types of creditable coverage. This determination is made without regard to the specific benefits included in the coverage. If creditable coverage is derived from more than one source on a particular day, all of the creditable coverage that the individual had on that day is counted as one day of creditable coverage.

2. *Significant break in coverage.* Days of creditable coverage that occur before a significant break in coverage are not required to be counted by the plan or issuer in reducing a preexisting condition exclusion. A significant break in coverage means a period of 63 consecutive days during all of which the individual did not have any creditable coverage.

a. Waiting and affiliation periods. Waiting periods and affiliation periods, as defined in the regulation, are not taken into account in determining a significant break in coverage. This is the case regardless of whether the person ultimately fails to obtain coverage under the plan (such as, where termination of employment occurs before coverage begins). However, days in a waiting period or affiliation period are not counted as creditable coverage.

The regulations specify that the period between the date an individual files a substantially complete application for coverage in the individual market and the effective date of such coverage is a waiting period, so that the period is not taken into account in determining a significant break in coverage. In this way, an application processing delay or omission of details on a form would not cause an applicant to incur a significant break in coverage, which could adversely affect an individual who seeks coverage under a group health plan after purchasing coverage in the individual market.

However, the waiting period for purchase of an individual policy tolls a break in coverage only if the filing of the application for the individual market insurance actually results in purchase of the coverage by the individual. (See Examples 7 and 8 in paragraph (b)(2)(iv)). By contrast, days in a waiting period for coverage under a group health plan toll a significant break in coverage regardless of whether coverage under the plan is ultimately obtained. (See Example 6.) The rule regarding the individual market prevents an individual from avoiding a significant break in coverage by repeatedly submitting applications to individual market issuers without ever purchasing coverage. This rule responds to comments sent to the Departments in response to the December 30, 1996 request for public comments. The comments asked for clear rules on when a significant break is tolled in the case of an application for individual market insurance.

Issuers of health insurance coverage in the individual market are subject to the same certification requirements that apply to plans and issuers in the group market. Therefore, issuers in the individual market must provide individuals with certificates that reflect information regarding the beginning of the waiting period (the date of application), the effective date of coverage, and the date coverage ends. This will assist people with coverage in the individual market who later become covered by a group health plan in demonstrating their creditable coverage to the plan or issuer in the group market.

b. Effect of State insurance law. HIPAA provides that the significant break in coverage rule does not preempt State insurance laws that provide longer periods than 63 days for a break in coverage. (The preemption provisions are described more fully below.) Accordingly, while federal law may allow a plan to disregard prior coverage before a 63-day significant break in coverage, an issuer may be required to take such coverage into account in order to comply with State insurance law. As a result, application of the break rules can vary between issuers located in different States. Similarly, the break rules may vary between insured plans and self-insured plans (which are not subject to State insurance laws) within a State, as well as between the insured and self-insured portions of a single plan. As illustrated by Example 3 in paragraph (b)(2)(iv), the laws of the State applicable to the insurance policy that has the preexisting condition exclusion are determinative of which break rule applies.

Alternative Method. Under the alternative method of counting creditable coverage, the plan or issuer determines the amount of an individual's creditable coverage for any of five identified categories of benefits. Those categories are coverage for mental health, substance abuse treatment, prescription drugs, dental care, and vision care. The plan or issuer may use the alternative method for any or all of the categories and may apply a different preexisting condition exclusion period with respect to each category (as well as to coverage not within a category). The creditable coverage determined for a category of benefits applies only for purposes of reducing the preexisting condition exclusion period with respect to that category. The standard method is used to determine an individual's creditable coverage for benefits that are not within any category for which the alternative method is being used. Disclosure statements concerning the plan must indicate that the alternative method is being used, and this disclosure must also be given to each enrollee at the time of enrollment. These statements must include a description of the effect of using the alternative method. Any issuer in the group market must provide similar statements to each employer at the time of offer or sale of the coverage.

For purposes of reducing the preexisting condition exclusion period under the alternative method, the plan or issuer determines under the standard method the amount of the individual's creditable coverage that can be counted, up to a total of 365 days of the most recent creditable coverage of the individual (546 days for a late enrollee). The period of this creditable coverage is referred to as the ''determination period.'' The plan or issuer counts all days of coverage within the applicable category that occurred during the determination period (without regard to any significant breaks in that category of coverage). Those days reduce the preexisting condition exclusion for coverage within that category.

The regulations do not provide detailed definitions of the benefit categories. Comments are invited on whether additional guidance is needed.

The regulations under the alternative method of counting creditable coverage do not include a category relating to significant differences in deductible amounts. Commentators expressed concerns about adverse selection if individuals can change from a high deductible plan when they become ill and obtain ''first dollar'' coverage from an HMO or other issuer that provides broad, comprehensive care with only low deductibles or copayments.[9] However, it is unclear how such a

[9] See also the discussion below under the heading ''HMO Affiliation as Alternative to Preexisting Condition Exclusion.''

category would be defined or applied. Accordingly, the Departments solicit comments on this issue.

Certificates and Disclosure of Previous Coverage—26 CFR 54.9801–5, 29 CFR 2590.701–5, 45 CFR 146.115

This section of the regulations sets forth guidance regarding the certification requirements and other requirements concerning disclosure of information relating to prior creditable coverage. The provision of a certificate and other disclosures of information are intended to enable an individual to establish his or her prior creditable coverage for purposes of reducing any preexisting condition exclusion imposed on the individual by any subsequent group health plan coverage.

Form of Certificate. In general, the certificate must be provided in writing, including any form approved by the Secretaries as a writing. In certain circumstances, where the individual requests that the certificate be sent to another plan or issuer instead of to the individual, and the other plan or issuer agrees, the certification information may be provided by other means, such as by telephone. In some States, issuers transfer coverage information by telephone. Comments are requested as to whether, and under what conditions, other methods of transmitting certification information (including electronic communication) should be permitted in future guidance.

Information in Certificate. Paragraph (a)(3) of this section of the regulations sets forth the information that must be included in a certificate. The regulations allow a plan or issuer in an appropriate case simply to state in the certificate that the individual has at least 18 months of creditable coverage that was not interrupted by a significant break in coverage and to indicate the date coverage ended. (A certificate would never have to reflect coverage in excess of 18 months without a 63-day break because this is the maximum creditable coverage that an individual could need under the preexisting condition exclusion rules and the rules for access to the individual market.) In any other case, the certificate must disclose (1) the date any waiting or affiliation period began,[10] (2) the date coverage began, and (3) the date coverage ended (or indicate if coverage is continuing).[11] For individuals with fewer than 18 months of coverage without a significant break in coverage, the information about specific dates is essential in order for a subsequent plan or issuer in the group or individual market to be able to apply the break rules, especially in light of the possibility that an individual may have other coverage from various sources and the potential differences among State break rules (described above).

Certification Events and Timing. Paragraph (a)(5) describes the rights of participants and dependents to receive certificates. In general, individuals have the right to receive a certificate automatically (an ''automatic certificate'') when they lose coverage under a plan and when they have a right to elect COBRA continuation coverage. The certificate must be furnished within the time periods described below:

- *First,* for an individual who is a qualified beneficiary entitled to elect COBRA continuation coverage, the certificate is required to be provided no later than when a notice is required to be provided for a qualifying event under COBRA.
- *Second,* for an individual who loses coverage under a group health plan and who is not a qualified beneficiary entitled to elect COBRA continuation coverage, the certificate is required to be provided within a reasonable time after the coverage ceases. (Typically, this would apply to small employers' plans that are not subject to COBRA.) This requirement is satisfied if the certificate is provided by the time a notice is required to be provided under a State program similar to COBRA.
- *Third,* for an individual who is a qualified beneficiary and has elected COBRA continuation coverage, the certificate is required to be provided within a reasonable time after either cessation of COBRA continuation coverage or, if applicable, after the expiration of any grace period for the payment of COBRA premiums.

In each of these three events, the regulations require the certificate to reflect only the most recent period of continuous coverage under the plan.

Under COBRA, multiemployer plans may provide notices within such longer period of time as provided for such notices under the terms of the plan. Under the general certification timing rule described above, multiemployer plans may use the same extended time period for providing certificates. Comments are requested on how this may affect a multiemployer plan and its participants and their families.

A certificate may be mailed by first class mail to the participant's last known address. A certificate for a participant's spouse with an address different from the participant's is to be sent to the spouse's address. A certificate may provide information with respect to both a participant and the participant's dependents if the information is identical for each individual, or if the information is not identical, a certificate may provide information sufficient to satisfy the requirements of the regulations with respect to each individual on one document.

A certificate is also required to be provided upon the request of, or on behalf of, an individual (whether the individual is a participant, the participant's spouse, or any other dependent) if the request is made within 24 months after the individual loses coverage under the plan. The certificate is required to be provided at the earliest time that the plan or issuer, acting in a reasonable and prompt fashion, can provide the certificate. In this case, the certificate reflects each period of continuous coverage ending within the 24 months prior to the date of request.[12]

Responsibilities of Plans and Issuers. Paragraph (a)(1) clarifies the statutory obligation of plans and issuers to provide certificates. The statutory obligation to furnish a written certificate of information regarding creditable coverage is imposed on both the group health plan and the health insurance issuer offering group health insurance coverage. This dual obligation was the subject of many of the comments received by the three Departments in response to the December 30, 1996 request for public comments published in the **Federal Register**. Concerns were raised about superfluous, duplicate certificates being issued and the potential responsibility of issuers for reporting on an individual's coverage under the plan after one issuer has been replaced by another.

Paragraph (a)(1) addresses these concerns by providing that the obligation to furnish a certificate is imposed on both the plan and each health insurance issuer that provides group health insurance coverage under the plan, subject to four exceptions.

First, paragraph (a)(1)(ii) provides that an entity required to provide a certificate is deemed to have satisfied this requirement to the extent that any other party provides the certificate and the certificate discloses the creditable coverage (including the waiting period

[10] Because the ending date for a waiting or affiliation period will always be the date coverage begins, the ending date does not have to be separately stated in a certificate.

[11] These dates would include any period of COBRA continuation coverage. A COBRA continuation coverage period does not have to be separately identified.

[12] For example, for participation who has had a number of interruptions in coverage, a requested certificate could consist of copies of all of the automatic certificates that were previously provided to the individual for each of these periods.

information) that was to be provided by the entity.

Second, paragraph (a)(1)(iii) provides that a plan is deemed to have satisfied its obligation if there is an agreement between an issuer and a plan under which the issuer agrees to provide certificates for individuals covered under the plan.

Third, paragraph (a)(1)(iv)(A) provides that an issuer is not required to provide any coverage information regarding coverage periods for which it was not responsible.

Fourth, paragraph (a)(1)(iv)(B) provides that if an individual switches from one issuer to another option allowed under the plan, or an issuer is replaced by another before an individual's coverage in the plan ceases, the first issuer is required to provide sufficient information to the plan (or to another party designated by the plan), so that when the individual leaves the plan, a certificate can be provided that includes the period of coverage under the policy of the first issuer. In this situation, no certificate is required to be provided to the individual, but the issuer must also cooperate with the plan by providing any information that may be requested later pursuant to the alternative method. (This rule will reduce unnecessary and potentially misleading information from being received while the individual's coverage under the plan is uninterrupted.) An issuer may presume that it is the final issuer for an individual if the individual's coverage under the policy ends at a time other than in connection with the plan's open season.

Other Entities Issuing Certificates. Paragraph (a)(6) identifies the various statutory authorities that create responsibility for other entities (that are not subject to a particular Department's regulations) to provide certificates. As described above, there are forms of creditable coverage other than coverage provided by group health plans and health insurance coverage offered in connection with a group health plan. Accordingly, individuals who leave coverage provided by any such other entity are entitled to have that coverage counted by a group health plan and may in many cases receive certificates for their creditable coverage. This information is included in the regulations because plans that impose a preexisting condition exclusion may find it helpful to know when creditable coverage will be provable through presentation of a certificate and when other forms of documentation or attestation may be needed.

In cases where certifications are provided by entities not subject to ERISA's requirements, such as Medicaid, the Indian Health Service, and CHAMPUS, certain adjustments in the certification rules may be appropriate. The regulations do not address how the certification process applies to these other programs. Comments are requested on how the certification requirements may be adapted to entities responsible for providing this coverage.

Dependent Coverage Information. Dependents are entitled to a written certificate of creditable coverage. Concerns were raised in comments received from the public regarding the certification of dependent coverage where information regarding dependents of participants in plans was not available. Plans and issuers, the commenters stated, often do not know the existence of dependents or their coverage periods until claims are filed. To address these concerns, the regulations have adopted two special rules.

First, under a transition rule that lasts through June 30, 1998, a plan or issuer may satisfy its obligation to provide a written certificate regarding the coverage of a dependent of a participant by providing the name of the participant covered by the plan and specifying the type of coverage provided in the certificate (such as family coverage or employee-plus-spouse coverage). However, if asked to provide a certificate relating to a dependent, the plan must make reasonable efforts to obtain and provide the name of the dependent. This rule will provide plans and issuers with a transition period to update their data systems to include information on dependents.

Second, the regulations include a special rule regarding dependent coverage that is not limited to the transition period. Under this rule, a plan or issuer must make a reasonable effort to collect the necessary information for dependents and include it on the certificate. However, under this special rule, an automatic certificate is not required to be issued until the plan or issuer knows (or, making reasonable efforts, should know) of the dependent's cessation of coverage. This information can be collected annually (during open enrollment).

Under the transition rule and the special rule, an individual may use the provisions described below to establish creditable coverage (and waiting and affiliation period information).

Information for Alternative Method of Counting Creditable Coverage. Following receipt of the certificate, an entity that uses the alternative method of counting creditable coverage may request that the entity that issued the certificate disclose additional information in order for the requesting entity to determine the individual's creditable coverage with respect to any category of benefits described in paragraph (b). The requested entity may charge the requesting entity the reasonable cost of disclosing the information. The requesting entity may ask for a copy of the summary plan description (SPD) that applied to the individual's coverage or may ask for more specific information. Set forth below is a model form that may be used for specific coverage information about the categories of benefits:

Information on Categories of Benefits

1. Date of original certificate: _____
2. Name of group health plan providing the coverage: _____
3. Name of participant: _____
4. Identification number of participant: ____
5. Name of individual(s) to whom this information applies: ____
6. The following information applies to the coverage in the certificate that was provided to the individual(s) identified above:

a. Mental Health: _____
b. Substance Abuse Treatment: _____
c. Prescription Drugs: _____
d. Dental Care: _____
e. Vision Care: _____

For each category above, enter ''N/A'' if the individual had no coverage within the category and either (i) enter both the date that the individual's coverage within the category began and the date that the individual's coverage within the category ended (or indicate if continuing), or (ii) enter ''same'' on the line if the beginning and ending dates for coverage within the category are the same as the beginning and ending dates for the coverage in the certificate.

Demonstration of Coverage if Certificate is Not Provided. Under HIPAA, in order to prevent an individual from being adversely affected if the individual does not receive a certificate, the individual has a right to demonstrate creditable coverage through the presentation of documentation or other means. For example, an individual may not have a certificate because: an entity failed to provide a certificate within the required time period; an entity was not required to provide a certificate; the coverage of the individual was for a period before July 1, 1996; or, the individual has an urgent medical condition that necessitates an immediate determination of creditable coverage by the plan or issuer. Under these circumstances, an individual may present evidence of creditable coverage through documents, records, third party statements, or other means, including telephone calls by the plan or issuer to a third party provider. The plan administrator is required to take into

account all information presented in determining whether to offset any or all of a preexisting condition exclusion. A plan or issuer is required to treat the individual as having furnished a certificate provided by a plan or issuer if the individual attests to the period of creditable coverage, the individual presents relevant corroborating evidence of some creditable coverage during the period, and the individual cooperates with the plan's or issuer's efforts to verify the individual's coverage.

If an individual needs to demonstrate his or her status as a dependent of a participant, the plan or issuer is required to treat the individual as having furnished a certificate if an attestation to such dependency and the period of such status is provided, and if the individual cooperates with the plan's or issuer's efforts to verify the dependent status.

Similar rules apply relating to determining creditable coverage under the alternative method.

Notice to Individual of Period of Preexisting Condition Exclusion. Within a reasonable time following the receipt of the certificate, information relating to the alternative method, or other evidence of coverage, a plan or issuer is required to make a determination regarding the length of any preexisting condition exclusion period that applies to the individual and notify the individual of its determination. Whether a determination and notification is made within a reasonable period of time depends upon the relevant facts and circumstances including whether the application of the preexisting condition exclusion period would prevent access to urgent medical services. The plan or issuer is required to notify the individual, however, only if, after considering the evidence, it has determined that a preexisting condition exclusion period will still be imposed on the individual. The basis of the determination, including the source and substance of any information on which the plan or issuer relied, must be included in the notification. The notification must also explain the plan's appeals procedures and the opportunity of the individual to present additional evidence.

The plan or issuer may reconsider and modify its initial determination if it determines that the individual did not have the claimed creditable coverage. In this circumstance, the plan or issuer must notify the individual of such reconsideration and, until a final determination is made, must act in accordance with its initial determination for purposes of approving medical services.

Model Certificate. The following model certificate has been authorized by the Secretary of each of the Departments. Use of the model certificate will satisfy the requirements of paragraph (a)(3)(ii) of the regulations.

Certificate of Group Health Plan Coverage

* IMPORTANT—This certificate provides evidence of your prior health coverage. You may need to furnish this certificate if you become eligible under a group health plan that excludes coverage for certain medical conditions that you have before you enroll. This certificate may need to be provided if medical advice, diagnosis, care, or treatment was recommended or received for the condition within the 6-month period prior to your enrollment in the new plan. If you become covered under another group health plan, check with the plan administrator to see if you need to provide this certificate. You may also need this certificate to buy, for yourself or your family, an insurance policy that does not exclude coverage for medical conditions that are present before you enroll.

1. Date of this certificate: _____
2. Name of group health plan: _____
3. Name of participant: _____
4. Identification number of participant: ____
5. Name of any dependents to whom this certificate applies: _____
6. Name, address, and telephone number of plan administrator or issuer responsible for providing this certificate:

_____
_____
_____

7. For further information, call: _____
8. If the individual(s) identified in line 3 and line 5 has at least 18 months of creditable coverage (disregarding periods of coverage before a 63-day break), check here_____ and skip lines 9 and 10.
9. Date waiting period or affiliation period (if any) began: _____
10. Date coverage began: _____
11. Date coverage ended: _____ (or check if coverage is continuing as of the date of this certificate: _____).

Note: Separate certificates will be furnished if information is not identical for the participant and each beneficiary.

Special Enrollment Periods—26 CFR 54.9801–6, 29 CFR 2590.701–6, 45 CFR 146.117

This section of the regulations provides guidance regarding the new enrollment rights provided to employees and dependents under HIPAA. A group health plan and a health insurance issuer offering group health insurance coverage are required to provide for special enrollment periods during which individuals who previously declined coverage are allowed to enroll (without having to wait until the plan's next regular open enrollment period). A special enrollment period can occur if a person with other health coverage loses that coverage or if a person becomes a dependent through marriage, birth, adoption, or placement for adoption.

A plan must provide a description of the special enrollment rights to anyone who declines coverage. The regulations provide a model of such a description.

A person who enrolls during a special enrollment period (even if the period also corresponds to a regular open enrollment period) is not treated as a late enrollee. (Accordingly, the plan or issuer may not impose a preexisting condition exclusion period longer than 12 months with respect to the person.)

Special Enrollment for Loss of Other Coverage. The special enrollment period for loss of other coverage is available to employees and their dependents who meet certain requirements. The employee or dependent must otherwise be eligible for coverage under the terms of the plan. When the coverage was previously declined, the employee or dependent must have been covered under another group health plan or must have had other health insurance coverage. The plan can require that, when coverage in the plan was previously declined, the employee must have declared in writing that the reason was other coverage, in which case the plan must at that time have provided notice of this requirement and the consequences of the employee's failure to provide the statement.

The special enrollment rights may apply with respect to an employee, a dependent of the employee, or both. An employee who has not previously enrolled can enroll under these rules if it is the employee who loses other coverage. An employee's dependent can be enrolled under these rules if it is the dependent who loses other coverage and the employee is already enrolled. In addition, both the employee and a dependent can be enrolled together under these rules if either the employee or the dependent loses other coverage.

If the other coverage is COBRA continuation coverage, the special enrollment can only be requested after exhausting COBRA continuation coverage. If the other coverage is not COBRA continuation coverage, special enrollment can only be requested after losing eligibility for the other coverage or after cessation of employer contributions for the other coverage. In each case, the employee has 30 days to request special enrollment. An individual does not have to elect COBRA continuation coverage or exercise similar continuation rights in order to preserve the right to special enrollment. However, an individual does not have a special enrollment right if the individual loses the other coverage as a result of the individual's

failure to pay premiums or for cause (such as making a fraudulent claim). Coverage under special enrollment must be effective no later than the first day of the month after an employee request the enrollment for himself or herself or on behalf of a dependent.

Special Enrollment for New Dependents. A special enrollment period also occurs if a person has a new dependent by birth, marriage, adoption, or placement for adoption. The election to enroll can be made within 30 days following the birth, marriage, adoption, or placement for adoption. In the case of a plan that does not offer any coverage for dependents and is then modified to offer dependent coverage, the election to enroll can instead be made during the 30 days beginning on the date dependent coverage is made available.

The special enrollment rules allow an eligible employee to enroll when he or she marries or has a new child (as a result of marriage, birth, adoption, or placement for adoption). A spouse of a participant can be enrolled separately at the time of marriage or when a child is born, adopted or placed for adoption. The spouse can be enrolled together with the employee when they marry or when a child is born, adopted, or placed for adoption. A child who becomes a dependent of a participant as a result of marriage, birth, adoption, or placement for adoption can be enrolled when the child becomes a dependent. Similarly, a child who becomes a dependent of an eligible employee as a result of marriage, birth, adoption, or placement for adoption can be enrolled if the employee enrolls at the same time.

In the case of a dependent special enrollment period, HIPAA provides that coverage with respect to a marriage is effective no later than the first day of the month after the date the request for enrollment is received and coverage with respect to a birth, adoption, or placement for adoption is effective on the date of the birth, adoption, or placement for adoption.

HMO Affiliation Period as Alternative to Preexisting Condition Exclusion—29 CFR 2590.701–7 and 45 CFR 146.119

This section of the regulations permits a group health plan offering health insurance through an HMO, or an HMO that offers health insurance coverage in connection with a group health plan, to impose an affiliation period, but only if certain other requirements are met. An ''affiliation period'' is defined in the regulations as a period of time that must expire before health insurance coverage provided by the HMO becomes effective, and during which the HMO is not required to provide benefits.

The regulations specify the following requirements for imposing an affiliation period:

- No preexisting condition exclusion may be imposed with respect to coverage through the HMO;
- No premium may be charged to a participant or beneficiary for the affiliation period;
- The affiliation period must be applied uniformly without regard to any health status-related factors; and
- The affiliation period must begin on the enrollment date, cannot exceed two months (three months for a late enrollee), and must run concurrently with any waiting period under the plan.

The regulations provide for the affiliation period to begin on the enrollment date in the plan, not when coverage with the HMO begins. Accordingly, if a plan offers multiple coverage options simultaneously, the HMO cannot impose an affiliation period on plan participants who change to the HMO option. Comments are requested on this rule.

The regulations permit an HMO to use alternatives in lieu of an affiliation period to address adverse selection, as approved by the State insurance commissioner or other official designated to regulate HMOs. Because an affiliation period may be imposed only if no preexisting condition exclusion is used, an alternative to an affiliation period may not encompass an arrangement that is in the nature of such an exclusion.[13]

While HMOs usually do not impose preexisting condition exclusions, they could choose to apply a preexisting condition exclusion period for all enrollees based on the alternative method of counting creditable coverage if the regulations were to add a category relating to deductibles. However, as described above under the heading ''Alternative Method,'' the regulations currently do not include such a category.

Nondiscrimination in Eligibility and Premiums in the Group Market—26 CFR 54.9802–1, 29 CFR 2590.702, 45 CFR 146.121

The regulations include provisions implementing the nondiscrimination provisions in HIPAA. Comments are welcomed on these provisions, and, in particular, comments are requested on whether guidance is needed concerning:

- The extent to which the statute prohibits discrimination against individuals in eligibility for particular benefits;
- The extent to which the statute may permit benefit limitations based on the source of an injury;
- The permissible standards for defining groups of similarly situated individuals;
- Application of the prohibitions on discrimination between groups of similarly situated individuals; and
- The permissible standards for determining bona fide wellness programs.

The Departments intend to issue further regulations on the nondiscrimination rules in the near future. In no event will the period for good faith compliance (specified in HIPAA sections 102(c)(5), 101(g)(5), and 401(c)(5)) with respect to section 2702 of the PHS Act, section 702 of ERISA, and section 9802 of the Code end before the additional guidance is provided.

A plan or issuer may not establish rules for eligibility (including continued eligibility) of an individual to enroll under the terms of the plan based on a health status-related factor. HIPAA and the regulations provide a list of health status-related factors. The Departments are considering interpreting the statutory language relating to eligibility to enroll so that a plan or issuer would be prohibited from providing lower benefits to certain individuals based on health status-related factors. Comments are welcomed on this interpretation.

Among the health status-related factors listed in the statute is ''evidence of insurability (including conditions arising out of acts of domestic violence).'' The Conference Report states that the inclusion of evidence of insurability in the list of health status-related factors ''is intended to ensure, among other things, that individuals are not excluded from health care coverage due to their participation in activities such as motorcycling, snowmobiling, all-terrain vehicle riding, horseback riding, skiing and other similar activities.'' However, HIPAA also provides that a plan or issuer is not required to provide particular benefits other than those provided under the terms of the plan. Moreover, HIPAA provides that a plan or issuer may establish limitations or restrictions on the amount, level, extent, or nature of the benefits or coverage for similarly situated individuals enrolled in the plan. Comments have been received indicating that some plans contain provisions that exclude coverage for benefits based on the source of injury (such as benefits for injuries sustained

[13] These alternative that may be used in lieu of an affiliation period to address adverse selection should not be confused with the use of the alternative method for counting creditable coverage discussed in the next paragraph.

in a motorcycle accident, injuries sustained in a motorcycle accident as the result of not wearing a helmet, or injuries sustained in the commission of a felony). Accordingly, comments are requested on how future guidance should treat benefit limitations based on the source of an injury.

The Conference Report also states that ''[t]he term 'similarly situated' means that a plan or coverage would be permitted to vary benefits available to different groups of employees, such as full-time versus part-time employees or employees in different geographic locations. In addition, a plan or coverage could have different benefit schedules for different collective bargaining units.'' Accordingly, comments are requested concerning the appropriate standards for determining ''similarly situated individuals,'' including whether a plan is permitted to vary benefits based on an employee's occupation. Because these standards could impact on the small group market, the Department of Health and Human Services is particularly interested in receiving comments from States with respect to how varying benefits based on occupation could affect rate setting.

The Departments also request comments regarding how the prohibitions on discrimination should be applied between groups of similarly situated individuals. For example, is guidance needed on whether a plan covering employees in two different locations could have a longer waiting period for employees at one location because the health status of those employees results in higher health costs?

A plan or issuer may not require any individual (as a condition of enrollment or continued enrollment) to pay a premium or contribution, that is greater than that for a similarly situated individual enrolled in the plan, based on a health status-related factor. However, this limitation does not restrict the amount that an issuer can charge an employer for the coverage. In addition, this limitation does not prevent a plan or issuer from establishing premium discounts or rebates or otherwise modifying applicable copayments or deductibles in return for adherence to programs of health promotion and disease prevention (bona fide wellness programs). Comments are requested regarding the standards for determining bona fide wellness programs, including whether such a program may provide a discount for non-smokers.

Special Rules—Excepted Plans and Excepted Benefits—26 CFR 54.9804–1, 29 CFR 2590.732, 45 CFR 146.145

This section of the regulations provides special rules for certain plans and certain benefits.

Very Small Plans. The group market requirements of HIPAA do not apply to a group health plan, or to group health insurance coverage offered in connection with a group health plan, for any plan year if, on the first day of the plan year, the plan has fewer than 2 participants who are current employees. However, a State may apply the group market provisions in the PHS Act to plans with fewer than two participants who are current employees. In this case, the State would apply its group market insurance law requirements to such small group plans (and such plans would not be subject to the individual market requirements).

Excepted Benefits. The group market provisions and the related regulations also do not apply to any group health plan or group health insurance issuer in relation to its provision of excepted benefits. The benefits identified in paragraph (b)(2) are generally not health insurance coverage and are excepted in all circumstances. In contrast, the benefits identified in paragraphs (b) (3), (4), and (5) are generally health insurance coverage but are excepted if certain conditions are met.

Limited-scope dental benefits, limited-scope vision benefits, and long-term care benefits are excepted if they are provided under a separate policy, certificate, or contract of insurance, or are otherwise not an integral part of the plan. For this purpose, limited-scope dental coverage typically provides benefits for non-medical services such as routine dental cleanings, x-rays, and other preventive procedures. Such coverage may also provide discounts on the cost of common dental procedures such as fillings, root canals, crowns, full or partial plates, or orthodontic services. Limited-scope dental coverage typically does not provide benefits for medical services, such as those procedures associated with oral cancer or with a mouth injury that results in broken, displaced, or lost teeth.

Similarly, limited-scope vision coverage provides benefits for routine eye examinations or the fitting of eyeglasses or contact lenses. This coverage does not include benefits for such ophthalmological services as treatment of an eye disease (e.g., glaucoma or a bacterial eye infection) or an eye injury.

Noncoordinated benefits may be excepted benefits. The term ''noncoordinated benefits'' refers to coverage for a specified disease or illness (such as cancer-only coverage) or hospital indemnity or other fixed dollar indemnity insurance (such as insurance that pays $100/day for a hospital stay as its only insurance benefit) if three conditions are met. First, the benefits are provided under a separate policy, certificate, or contract for insurance. Second, there is no coordination between the provision of these benefits and another exclusion of benefits under a plan maintained by the same plan sponsor. Third, benefits are paid without regard to whether benefits are provided with respect to the same event under a group health plan maintained by the same plan sponsor.

Certain supplemental benefits are excepted only if they are provided under a separate policy, certificate, or contract of insurance. This category of excepted benefits includes Medicare supplemental (commonly called ''Medigap'' or ''MedSupp'') policies, CHAMPUS supplements, and supplements to certain employer group health plans. Such supplemental coverage cannot duplicate primary coverage and must be specifically designed to fill gaps in primary coverage, coinsurance, or deductibles.[14]

The regulations do not address section 2721(e) of the PHS Act or section 705(d) of ERISA relating to the treatment of partnerships (or the application of the Code's group market rules to partnerships). Comments are requested on these provisions, including how these provisions coordinate with other provisions relating to self-employed individuals and partnerships.

F. Other Group Market Provisions[15]

Guaranteed Renewability in Multiemployer Plans and Multiple Employer Welfare Arrangements—Section 703 of ERISA and Section 9803 of the Code

Requirements relating to guaranteed renewability in multiemployer plans

[14] Note that a group health plan, which provides primary coverage while an individual is an active employee, is often extended to retirees. When the retiree becomes eligible for Medicare, the group health plan commonly coordinates with Medicare and may serve a supplemental function similar to that of a Medigap policy. However, such employer-provided retiree ''wrap around'' benefits are not excepted benefits (because they are expressly excluded from the definition of a Medicare supplement policy in section 1882(g)(1) of the Social Security Act).

[15] In this section (''Other Group Market Provisions''), references conform to usage in 45 CFR Part 146, which uses ''HCFA'' in place of ''Department of Health and Human Services'' or ''Secretary of Health and Human Services'' and

Continued

and multiple employer welfare arrangements are set forth in section 703 of ERISA and section 9803 of the Code (but not in the PHS Act). These provisions state that a group health plan that is a multiemployer plan or that is a multiple employer welfare arrangement may not deny an employer whose employees are covered under such a plan continued access to the same or different coverage under the terms of such plan, other than for certain specified reasons. The Departments are not issuing regulations under section 703 of ERISA or section 9803 of the Code at this time, but anticipate issuing regulations under these sections and solicit comments regarding these sections.

In these provisions, the terms ''continued access'' and ''same or different coverage'' are not defined. Comments are requested on how rules under these provisions might address variations and changes in a plan's benefit packages and contribution rates, differences in the characteristics of multiemployer plans and multiple employer welfare arrangements, and any possible implications for the financial integrity of affected plans.

Preemption of State Laws; State Flexibility—29 CFR 2590.731 and 45 CFR 146.190

The McCarran-Ferguson Act of 1945 (Pub. L. 79–15) exempts the business of insurance from federal antitrust regulation to the extent that it is regulated by the States and indicates that no federal law should be interpreted as overriding State insurance regulation unless it does so explicitly. Section 514(a) of ERISA preempts State laws relating to employee benefit plans (including group health plans). However, section 514(b)(2) of the ERISA saves from preemption any State law that regulates insurance. Section 2723 of the PHS Act and section 731 of ERISA make clear that Part A of Title XXVII of the PHS Act and Part 7 of Subtitle B of Title I of ERISA do not in any way affect or modify section 514 of ERISA.

In addition, section 2723 of the PHS Act and section 731(a) of ERISA preempt State insurance laws to the extent such laws ''prevent the application of'' Part A of Title XXVII of the PHS Act and Part 7 of Subtitle B of Title I of ERISA. (There is no corresponding provision in the Code.) In this regard, the Conference Report states that the conferees intended the narrowest preemption of State laws with regard to health insurance issuers (not group health plans) with respect to all the provisions of Part A of Title XXVII of the PHS Act and Part 7 of Subtitle B of Title I of ERISA (except for preemption with respect to the provisions of section 2701 of the PHS Act and section 701 of ERISA.) Consequently, the Conference Report states that State laws with regard to health insurance issuers that are broader than federal requirements in certain areas would not ''prevent the application of'' the provisions of Part A of Title XXVII of the PHS Act or Part 7 of Subtitle B of Title I of ERISA.

However, the preemption is broader for the statutory requirements of section 2701 of the PHS Act and 701 of ERISA that limit the application of preexisting condition exclusions. State laws cannot ''differ'' from the preexisting condition exclusion requirements of section 2701 of the PHS Act or section 701 of ERISA, except as specifically permitted under section 2723(b)(2) of the PHS Act and section 731(b)(2) of ERISA. These specific exceptions permit a State to impose on health insurance issuers certain stricter limitations relating to preexisting condition exclusions.

Comments are also solicited on issues relating to the coordination of the new requirements under HIPAA and State requirements for associations that may be multiple employer welfare arrangements as defined in section 3(40) of ERISA.

Guaranteed Availability of Coverage for Small Employers Under the PHS Act Group Market Provisions—45 CFR 146.150

Rules relating to guaranteed availability of coverage for employers in the small group market appear only in the PHS Act (at section 2711). In general, this section requires health insurance issuers that offer coverage in the small group market to offer to any small employer all of the products they actively market in that market. This is generally referred to as an all-products guarantee. However, as allowed under applicable State law, the issuer can require that the employer make a minimum contribution toward the premium charged and have a minimum level of participation by eligible individuals. The issuer must also accept for enrollment every eligible individual without regard to health status. For purposes of this section, an eligible individual is one who meets the applicable requirements of the group health plan, the issuer, and State law for coverage under the plan.

Some States have, in recent years, made reforms in their small group markets that only require guaranteed issue of a basic and a standard policy, rather than an all-products guarantee. They have urged that an all-products guarantee not be adopted, arguing that the law does not specifically require it. However, sections 2711 and 2741 of the PHS Act, as added by HIPAA, contain virtually identical requirements requiring issuers that offer health insurance coverage in either the small group or individual market to make ''such coverage'' available to, respectively, small employers or eligible individuals. While section 2741 explicitly permits issuers to limit to two policies the offerings they are required to make in the individual market, the small group market provisions contain no similar exception. In fact, section 2713(b)(1)(D) requires that an issuer that offers health insurance to any small employer must provide information concerning ''the benefits and premiums available under *all* health insurance coverage for which the employer is qualified.'' (Emphasis added.) This indicates that Congress intended to require an all-products guarantee in the small group market. (However, a State that implements an ''alternative mechanism'' in the individual market under section 2744 of the PHS Act has the flexibility either to impose an all-products guarantee or to use a completely different mechanism for making insurance available to individuals guaranteed coverage under the statute.)

Various industry groups and persons responding to the notice that the three Departments published on December 30, 1996 asked that the term ''offer'' be interpreted to mean ''actively marketed,'' so that issuers would not be required to reopen closed blocks of business. The regulations make this clear.

Section 2711 also requires issuers to accept for enrollment any individuals who are eligible to enroll under the terms of the plan, and who satisfy the requirements of the issuer and applicable State law, during the period in which the individual ''first becomes eligible'' to enroll under the terms of the group health plan. Thus, the issuer is not required to accept late enrollees. The regulations make it clear that this protection extends to individuals if they ''first become eligible'' to enroll during a special enrollment period. The special enrollment provisions of the statute evidence the intent that individuals who qualify for special enrollment be given the same protections given to newly-hired employees and their dependents.

''HCFA regulations'' in place of ''PHS Act regulations.''

An issue has also been raised as to whether the statutory definitions of premium contributions and group participation rules, which are repeated in the regulations, related only to percentages of employees or premium dollars or to absolute numbers of employees or premium amounts. If the latter interpretation were permitted, the effect would be to undermine the all-products guarantee by allowing, for example, some products to be available to ''larger'' small employers, but not to the smallest employers. The regulations currently leave interpretation of this language to the States, but comments are welcomed on this issue.

Section 146.150 also includes rules regarding the circumstances under which issuers are permitted to deny coverage to employers. If the product is a network plan, under which services are furnished by a defined set of providers, the issuer can deny coverage to an employer whose eligible individuals do not live, work, or reside in the network plan's service area. It can also deny coverage if it has demonstrated to the State that its network does not have the capacity to deliver services to additional groups, but is then barred for 180 days from offering coverage in that service area. An issuer may also deny coverage if it demonstrates that it lacks sufficient financial reserves to underwrite additional coverage, but is barred for 180 days from offering coverage in the small group market in the State. Both of these exceptions must be applied to all employers uniformly without consideration of the health status or claims experience of an employer's employees or dependents. Neither of these exceptions relieves a network plan of its responsibility to continue servicing its in-force business under the guaranteed renewability requirements of the regulations.

Finally, § 146.150 provides that if the coverage is only made available to members of ''bona fide associations'' as that term is defined in the regulations, it is not subject to the guaranteed availability requirements. (Accordingly, the coverage does not have to be offered to non-members.) However, employers that obtain coverage through a bona fide association are assured of guaranteed access to the association's coverage options as long as they remain members of the association. This is because a bona fide association cannot condition membership in the association on health status-related factors. Moreover, it must offer coverage to all employers who are members without regard to health status-related factors relating to their employees or dependents. Therefore, an association cannot legally refuse enrollment to members on a selective basis so long as they meet the association's membership criteria.

Guaranteed Renewability of Coverage for Employers Under the PHS Act Group Market Provisions—45 CFR 146.152

Section 146.152 of the Health Care Financing Administration (HCFA) regulations implements section 2712 of the PHS Act, which requires issuers to renew or continue in force any coverage in the large or small group market at the option of the plan sponsor. The exceptions to this requirement include nonpayment of premiums, fraud, and violation of minimum participation or contribution rules, as permitted under applicable State law. Also, the issuer can cease to offer either a particular product or all coverage it offers in the particular market, and can refuse to renew if the group health plan's participants all leave the service area of a network plan, or if the coverage is provided through a bona fide association and the employer's membership ends.

Issuers that decide to discontinue offering a particular product or all coverage in the small or large group market are subject to certain requirements outlined in paragraphs (c) and (d) of this section of the regulations. Issuers discontinuing only a particular product must give 90 days' notice, must offer the plan sponsor the option to purchase other coverage the issuer offers in that market, and must discontinue the product uniformly, without regard to claims experience or health status of participants or dependents under a particular group health plan. If the issuer terminates all coverage in a market or markets, it must provide 180 days' notice to each plan sponsor, and it is prohibited from issuing coverage in the market(s) or State involved for five years following the date of discontinuation. Plans or issuers may modify the health insurance coverage at the time of coverage renewal, provided the modification is consistent with State law and, for the small group market, is effective uniformly among group health plans with coverage under that product.

Some States have asked whether an issuer that chooses to stop selling comprehensive products, such as a basic or standard policy, in a particular State's group market, must also cease selling policies consisting of excepted benefits. Because Congress permitted these types of supplemental policies and limited benefit plans to be excepted from the requirements of HIPAA in both the group and individual markets, HCFA intends to defer to the States' judgment on this issue, and solicit comments.

State law may limit the extent to which an issuer can abandon a product or market, and under what circumstances. For example, a State may choose to require an issuer vacating the market to transfer its business to another issuer through assumption reinsurance, or some other means permitted under State law.

Paragraph (g) of this section of the regulations provides that, with respect to group coverage offered only through associations, the option of guaranteed renewability extends to include employer members of an association. This provision means that all employers covered by an issuer through an association have the right to renew the coverage they received if the association ceases to serve its members, regardless of the reason.

Disclosure of Information by Issuers to Employers Seeking Coverage in the Small Group Market—45 CFR 146.160

Section 146.160 of the HCFA regulations implements section 2713 of the PHS Act by setting forth rules relating to disclosure of information by issuers to employers seeking coverage in the small group market. In its solicitation and sales materials, the issuer must make a reasonable disclosure that the specified information is available on request. The information that must be provided includes the issuer's right to change premium rates and the factors that may affect changes in premium rates, renewability of coverage, any preexisting condition exclusion (including use of the alternative method of counting creditable coverage), any affiliation periods applied by HMOs, the geographic areas served by HMOs, and the benefits and premiums available under all health insurance coverage for which the employer is qualified under minimum contribution and participation rules, as permitted by State law. The issuer is exempted from disclosing proprietary or trade secret information under applicable law.

''Factors that may affect changes in premium rates'' and ''proprietary and trade secret information under applicable law'' have not been defined. Comments are requested regarding whether they should be defined.

The information described in this section must be provided in language that is understandable by the average small employer and sufficient to reasonably inform small employers of their rights and obligations under the health insurance coverage. This requirement can be satisfied by using as

a model the outlines of coverage provided under Medicare Supplement insurance. (These outlines are required to provide easy comparison of the coverage and cost of all available products.) Reasonable information includes rating schedules for each product to which more than one rate applies, and, with respect to network plans, maps of service areas or lists of counties served.

Exclusion of Certain Plans From the PHS Act Group Market Requirements—45 CFR 146.180

Section 146.180 of the HCFA regulations implements section 2721 of the PHS Act, which permits certain nonfederal governmental plans to elect to be exempted from some or all of the group market requirements of the HCFA regulations, although they are subject to the certification and disclosure requirements of § 146.115. With respect to nonfederal governmental plans that are collectively bargained, this section does not preempt State and local collective bargaining laws. The regulation establishes the form and manner of the election, and requires a nonfederal governmental plan making this election to notify plan participants, at the time of enrollment and on an annual basis, that it has made the election and what effect the election has. The participant notice and certification and disclosure obligations are integral parts of the election. Failure to comply with these obligations invalidates an election and subjects the nonfederal governmental plan to the requirements the election would have permitted the plan to avoid.

Only nonfederal governmental plans that are self-funded (in whole or in part) can make the election, and the election only applies to the self-funded portion. A health insurance issuer that sells insurance coverage to a nonfederal plan must comply with all the group market requirements.

Enforcement of PHS Act Requirements—45 CFR 146.184

Part 146 imposes requirements on health insurance issuers that offer coverage in the group market in a State, and on nonfederal governmental (i.e., State and local) group health plans. With respect to issuers, the statute makes it clear that it is solely within the discretion of the States, in the first instance, whether to take on the responsibility for enforcing those requirements or whether to leave enforcement to the federal government. HCFA anticipates that the States will choose to enforce the requirements. However, the statute also makes clear that if a State does not substantially enforce the requirements, HCFA must enforce them. The statute also requires HCFA to enforce the requirements applicable to nonfederal governmental plans.

Section 146.184(b)(2) sets forth the procedures that HCFA will follow if a question is raised about the State's enforcement with respect to issuers. Under the procedures, States are given every opportunity to demonstrate why federal enforcement is not required. The regulations also make it clear that the procedures will not be triggered unless HCFA is satisfied that there has first been a reasonable effort to exhaust any State remedies. However, if, after giving the State a reasonable opportunity to enforce, HCFA makes a final determination that a State is not substantially enforcing these requirements, HCFA will enforce the requirements using the civil money penalties provided for under the statute.

Parargarph (d) describes the process for imposing civil money penalties against issuers or nonfederal plans that fail to comply with the group market requirements in the PHS Act. If HCFA receives a complaint or other information that indicates that a right guaranteed by the group market rules is being denied, HCFA will first determine which entity is potentially responsible for any penalty. If the failure is by an issuer, the issuer will be responsible. If a nonfederal governmental plan is sponsored by a single employer, the employer will be liable, but if the plan is sponsored by two or more employers, the plan will be liable. If, after giving the entity or entities an opportunity to respond, HCFA assesses a penalty, the regulation provides appeal rights. The penalty can consist of up to $100 for each day, for each individual whose rights are violated.

Effective Dates—26 CFR 54.9806–1, 29 CFR 2590.736, 45 CFR 146.125

The group market provisions are generally effective for plan years beginning after June 30, 1997.[16] In many cases, no preexisting condition exclusion may be imposed with respect to an individual on the effective date because any permitted preexisting condition exclusion period is measured from the individual's enrollment date in the plan (even if the enrollment date is before the statutory effective date). An individual who has not completed the maximum permitted exclusion period under HIPAA before the effective date for his or her plan may use creditable coverage to reduce the remaining preexisting condition exclusion period. The regulations contain examples illustrating the effect of these rules.

The requirement that a plan or issuer provide certificates to show creditable coverage applies to events occurring on or after July 1, 1996, except that in no case is a certificate required to be provided before June 1, 1997 or to reflect coverage before July 1, 1996.

For events occurring on or after July 1, 1996 but before October 1, 1996, a certificate is required to be provided only upon a written request by or on behalf of the individual to whom the certificate applies. For events occurring on or after October 1, 1996 and before June 1, 1997, a certificate must be furnished no later than June 1, 1997 (or, if later, any date that would otherwise apply under the standard rules).

The regulations include an optional transition rule for events before June 1, 1997. (The transition rule applies to automatic certificate events; it does not apply where a certificate is requested.) A group health plan or health insurance issuer offering group health coverage is deemed to satisfy the automatic certificate requirements if a special notice is provided no later than June 1, 1997. The notice must be in writing and must include information substantially similar to the information included in a model notice authorized by the Secretaries. For this purpose, the following model notice is authorized:

IMPORTANT NOTICE OF YOUR RIGHT TO DOCUMENTATION OF HEALTH COVERAGE

Recent changes in Federal law may affect your health coverage if you are enrolled or become eligible to enroll in health coverage that excludes coverage for preexisting medical conditions.

The Health Insurance Portability and Accountability Act of 1996 (HIPAA) limits the circumstances under which coverage may be excluded for medical conditions present before you enroll. Under the law, a preexisting condition exclusion generally may not be imposed for more than 12 months (18 months for a late enrollee). The 12-month (or 18-month) exclusion period is reduced by your prior health coverage. You are entitled to a certificate that will show evidence of your prior health coverage. If you buy health insurance other than through an employer group health plan, a certificate of prior coverage may help you obtain coverage without a preexisting condition exclusion. Contact your State insurance department for further information.

[16] In the case of a group health plan maintained pursuant to one or more collective bargaining agreements between employee representatives and one or more employers ratified before August 21, 1996, the group market provision (other than the requirements to provide certifications) do not apply to plan years beginning before the later of July 1, 1997 or the date on which the last of the collective bargaining agreements relating to the plan terminates (determined without regard to any extension agreed to after August 21, 1996).

For employer group health plans, these changes generally take effect at the beginning of the first plan year starting after June 30, 1997. For example, if your employer's plan year begins on January 1, 1998, the plan is not required to give you credit for your prior coverage until January 1, 1998.

You have the right to receive a certificate or prior health coverage since July 1, 1996. You may need to provide other documentation for earlier periods of health care coverage. Check with your new plan administrator to see if your new plan excludes coverage for preexisting conditions and if you need to provide a certificate or other documentation of your previous coverage.

To get a certificate, complete the attached form and return it to:

[Insert Name of Entity:]
[Insert Address]:
For additional information contact: [Insert Telephone Number]

The certificate must be provided to you promptly. Keep a copy of this completed form. You may also request certificates for any of your dependents (including your spouse) who were enrolled under your health coverage.

REQUEST FOR CERTIFICATE OF HEALTH COVERAGE

Name of Participant: _____

Date: _____

Address: _____

Telephone Number: _____

Name and relationship of any dependents for whom certificates are requested (and their address if different from above):

_____

_____

The provisions in the regulations relating to method of delivery and entities required to provide a certificate apply with respect to the provision of the notice. If an individual requests a certificate following receipt of the notice, the certificate must be provided at the time of the request as set forth in the regulations relating to certificates provided upon request.

HIPAA provides that no enforcement action is to be taken against a group health plan or health insurance issuer with respect to a violation of the group market rules before January 1, 1998 if the plan or issuer has sought to comply in good faith with such requirements. Compliance with the regulations is deemed to be good faith compliance with the group market rules.

G. Interim Rules and Request for Comments

Section 707 of ERISA (redesignated as section 734 by section 603(a)(3) of the NMHPA), Section 2707 of the PHS Act, and Section 9806 of the Code added by HIPAA, provide, in part, that the Secretaries of Labor, Treasury and HHS may promulgate any interim final rules as they determine are appropriate to carry out the portability provisions of HIPAA.

Under Section 553(b) of the Administrative Procedure Act (5 U.S.C. 551 *et seq.*) a general notice of proposed rulemaking is not required when the agency, for good cause, finds that notice and public comment thereon are impracticable, unnecessary or contrary to the public interest.

These rules are being adopted on an interim basis because the Secretaries have determined that without prompt guidance, some members of the regulated community will have difficulty complying with the HIPAA's certification requirements, and will be in violation of the statute. Congress expressly intended that the certification and prior creditable coverage provisions serve as the mechanism for increasing the portability of health coverage for plan participants and their beneficiaries. Without the Departments' guidance, plans would likely be unable to produce the necessary amendments to plan documents reflecting HIPAA's new requirements, as well as the appropriate certifications of prior coverage that would help participants and beneficiaries reduce any applicable preexisting condition exclusion periods imposed by a new health plan. Thus, without the Departments' prompt guidance, participants and beneficiaries will not have the benefit of a convenient certificate of prior coverage to present upon changing health coverage, and will likely have greater difficulty proving that they are entitled to health coverage immediately, or soon after joining a new health plan.

Moreover, HIPAA's portability requirements will affect the regulated community in the immediate future. HIPAA's certification requirements are effective for all group health plans on June 1, 1997. HIPAA's underlying requirements concerning establishing periods of prior creditable coverage, pre-existing condition exclusion provisions, and the special enrollment requirements, are generally applicable for group health plans for plan years beginning on or after July 1, 1997. Plan administrators and sponsors, and participants and beneficiaries will need guidance on how to comply with the new statutory provisions before these effective dates. These rules have been written in order to ensure that plan sponsors and administrators of group health plans, as well as participants and beneficiaries, are provided timely guidance concerning compliance with these recently enacted amendments to ERISA, the PHS Act and the Code. These rules provide guidance on these statutory changes, and are being adopted on an interim basis because the Departments find that issuance of such regulations in interim final form with a request for comments is appropriate to carry out the new regulatory structure imposed by HIPAA on group health plans and health insurance issuers. In addition, these rules are necessary to ensure that plan sponsors and administrators of group health plans, as well as participants and beneficiaries, are provided timely guidance concerning compliance with new and important disclosure obligations imposed by HIPAA.

Sections 101(g)(4), 102(c)(4), and 401(c)(4) of HIPAA also mandate that the Secretaries issue regulations necessary to carry out the portability amendments by April 1, 1997. Issuance of a notice of proposed rule making with pubic comment thereon prior to issuing a final rule could delay significantly the issuance of essential guidance and prevent the Departments from complying with their statutory rule making deadline. Furthermore, these rules are being adopted on an interim basis and the Departments are inviting interested persons to submit written comments on the rules for consideration in the development of the final rules relating to HIPAA. Such final rules may be issued in advance of January 1, 1998, after affording the public an opportunity to review and comment.

For the foregoing reasons, the Departments find that the publication of a proposed regulation, for the purpose of notice and public comment thereon, would be impracticable, unnecessary, and contrary to the public interest.

H. Regulatory Flexibility Act

The Regulatory Flexibility Act (5 U.S.C. 601 *et seq.*) (RFA) imposes certain requirements with respect to rules which would have significant economic impact on a substantial number of small entities. Section 603 of the RFA requires an agency publishing a general notice of proposed rulemaking (NPRM) under section 553 of the APA to present at the time of the publication of its NPRM an initial regulatory flexibility analysis, describing the impact of the rule on small entities, and seeking public comment on such impact.

Small entities include small business, non-profit organizations, and governmental agencies. A ''rule'' under the Regulatory Flexibility Act is one for which a general notice of proposed rulemaking is required under section 553(b) of the APA.

Since these rules are issued as interim rules, and not as a general notice of

proposed rulemaking, for the reasons stated above, an Initial Regulatory Flexibility analysis has not been prepared.

While these rules are being promulgated as interim final rules, the Departments nevertheless invite interested persons to submit comments for consideration in the development of the final rules regulating to HIPAA. Consistent with the policy of the Regulatory Flexibility Act, the public is encouraged to submit comments that suggest alternative rules that accomplish the stated purpose of the statute and minimize the impact on small entities. Specifically, the public in encouraged to address:

- What information relating to prior coverage, preexisting condition exclusion, health status, waiting periods and similar issues do employers, plans and issuers currently rely on in maintaining health care coverage systems?
- What are the estimated costs of complying with the statute's requirements on certification of periods of prior creditable coverage?
- How many small issuers offer products that may be subject to the regulations? Is there an anticipated effect on these small companies' competitiveness due to the regulations?
- To what extent do group health plans currently use service providers to fulfill the administrative obligations, including reporting and disclosure, previously imposed by ERISA? To what extent would group health plans also use service providers to comply with this regulation's certification requirements?

I. Executive Order 12866, the Unfunded Mandates Reform Act and the Small Business Regulatory Enforcement Fairness Act of 1995

These rules have been determined to be a significant regulatory action under Section 3(f) of Executive Order 12866. The following analysis is consistent with Section 6(a)(3)(C) of the Order.

These rules are not subject to the Unfunded Mandates Reform Act of 1995 (Pub. L. 104–4), because they are interim final rules. However, consistent with the policy embodied in the Unfunded Mandates Reform Act, the regulation has been designed to be the least burdensome alternative for state, local and tribal governments and the private sector, while achieving the objectives of HIPAA. In addition, the following analysis provides information concerning the effects of the regulation on state, local, and tribal governments and the private sector.

Throughout the regulatory process, HHS met and consulted with representatives of affected state, local and tribal governments. These groups include the National Association of Insurance Commissioners, the National Governors' Association, the National Council for State Legislatures, the Indian Health Service, and the American Public Welfare Association. HHS also provided technical advice regarding its interpretation of the statute to state insurance commissioners and state legislatures at their request. Generally, these groups have concerns regarding:

- The statute's preemption of state laws that would prevent the implementation of statutory provisions;
- The burden on issuers and plans to implement the statutory provisions, especially with regard to certification of prior creditable coverage; and
- State's desires to have considerable flexibility in complying with the statue, and continuing their traditional role as regulators of insurance.

After serious consideration of these concerns, HHS narrowly interpreted the preemption of state law, taking the least burdensome alternatives provided states considerable flexibility in complying with the statute, and recognized the limited authority of federal agencies in the regulation of health insurance.

The Administrator of the Office of Information and Regulatory Affairs of the Office of Management and Budget has determined that this is a major rule for purposes of the Small Business Regulatory Enforcement Fairness Act of 1996 (5 U.S.C. Section 801 *et seq.*).

Set forth below is a discussion regarding the impact of the statute and a discussion of the costs and benefits of the regulations implementing the statute.

J. Extensions of Coverage Under the Statute

These regulations implement certain provisions of HIPAA. The statute was enacted to, among other things, ''improve portability and continuity of health care coverage in the group and individual markets,'' as stated in the Conference Report. The statute accomplishes these goals by instituting reforms in the group and individual insurance markets, including provisions limiting the use of pre-existing condition exclusions, and requiring guaranteed access to health care coverage and guaranteed renewability for certain groups and individuals. There are also non-discrimination provisions and special enrollment rights in the statute.

The pre-existing condition exclusion periods that HIPAA restricts are widespread. According to the Bureau of Labor Statistics (BLS), 46 percent of participants in private-sector, employer-sponsored health plans are in plans with pre-existing condition exclusions (1993–1994 data). The same is true of 41 percent of participants in state and local government employer-sponsored plans (1994 data.)

The duration of exclusion periods varies from plan to plan. Based on Peat Marwick's 1995 employer survey, an estimated 57 percent of participants in plans with exclusions are in plans with exclusions that last 12 months. The remainder are distributed as follows: 13 percent in plans with 3-month exclusions, 22 percent in plans with 6-month exclusions, 7 percent in plans with 9-month exclusions, and 1 percent in plans with exclusions that last more than 12 months.

HIPAA's portability provisions resemble provisions of many current state laws. Importantly, however, HIPAA extends these provisions of self-insured ERISA plans which federal law shields from state regulation. In addition, it sets a minimum uniform threshold for insured group plans and individual markets across all states.

HIPAA's portability provisions will result in both direct and social costs and benefits.

In general, direct costs and benefits arise directly from the application of HIPAA's insurance portability and access provisions. Direct costs and benefits are often best understood as transfers of resources among economic agents, which do not necessarily represent changes in overall social welfare. Stated differently, they represent changes in how the economic pie is divided (in this case, mainly with respect to health care), and not changes in the size of the pie. Direct costs and benefits are often easier to quantify than social costs, as they are often directly observable as transactions in the marketplace.

With respect to HIPAA's portability and access provisions, direct costs and benefits arise from the extension of insurance coverage to individuals and conditions not otherwise covered. Direct benefits to individuals include the payment of individuals' claims for those services and conditions. Direct costs of individuals include the premiums associated with that coverage. Some available estimates of these direct costs and benefits are presented below.

Social costs and benefits, in contrast, do result in net changes in overall social welfare. Social benefits generally reflect social welfare gains that arise in

connection with statutory or regulatory interventions that remedy market failure. Likewise, social costs generally reflect welfare losses arising from interventions in otherwise efficient markets. Social welfare changes often play out through a complex set of behavorial responses to interventions. They are more difficult to quantify than direct costs and benefits.

With respect to HIPAA, social welfare changes generally arise indirectly from HIPAA's portability and access provisions. They reflect dynamic behavioral responses to HIPAA's portability and access provisions. Expected social benefits, primarily improved access to health insurance and also improved job mobility, cannot be meaningfully quantified. Expected social costs, which could include erosions in coverage arising from direct premium costs, are expected to be small. Since no measures of HIPAA's many social welfare effects are available, a mostly qualitative discussion of major effects is offered below. A more quantitative discussion of direct costs and benefits follows later.

1. Social Welfare Effects of HIPAA's Portability and Access Provisions

The primary direct benefits of the law are improved access to insurance coverage, and more comprehensive coverage, through employers and in the individual insurance market. Increased access and comprehensiveness helps protect individuals from catastrophic expenses.

There are a number of social benefits associated with improved access:

- It reduces individual's risk of incurring large out-of-pocket costs;
- It is often more cost effective to provide timely preventive and remedial care than to delay care until conditions worsen. Therefore, to the extent that individuals receive more timely and appropriate care as a result of HIPAA, over time, the long-term, cumulative cost of their care may be lower. This has the potential to reduce premiums for all individuals within a risk pool, not just the individuals directly affected by HIPAA. Similarly, the Medicare program may benefit from reduced expenditures because more individuals who become newly entitled to Medicare will have had insurance coverage during the course of their working life or through the individual insurance market.
- To the extent that more timely care results in improved health, worker attendance and productivity might improve.
- HIPAA's portability provisions likewise help individuals transitioning from state and federal welfare programs to paid work. Individuals with health conditions can offset their new health plan's preexisting condition exclusions against prior coverage from any source, including Medicaid.
- Reductions in job benefit both individuals and the economy at large. Increased mobility can boost individual workers' career opportunities. Increased mobility also strengthens U.S. economic efficiency and competitiveness;
- HIPAA's federal minimum standards for small group and individual access to insurance coverage may improve the functioning of small group and individual markets. The standards will alleviate disruptions that might otherwise arise when ''riskier'' groups and individuals are denied or dropped from coverage.
- To the extent that HIPAA results, on net, in more insurance payment for otherwise uncompensated care, cost-shifting and associated inefficiencies in health care markets could be reduced.

HIPAA's group-to-individual portability provisions may provide a benefit for employees who move to jobs without health coverage. Some small employers that do not currently offer health care coverage may be able to do so more easily under HIPAA's guaranteed issue provisions. This may help level the playing for small employers to compete with larger ones in recruiting employees. While premium increases resulting from HIPAA may reduce the affordability of coverage for some employers, this effect is expected to be small, as noted below.

HIPAA also requires that issuers offering health insurance coverage in the individual market renew coverage for all individuals purchasing health insurance coverage in the individual market, not only eligible individuals. However, when an eligible individual elects family coverage, the issuer may apply a pre-existing condition exclusion, under applicable State law, to any of the individual's family members who are not eligible individuals under the statute.

The group-to-group portability regulation is likely to benefit individuals who maintain employer-sponsored health benefit coverage and change jobs or health plans, the dependents of such individuals, and workers who face ''job lock'' due to health coverage concerns.

Under HIPAA, health insurance coverage provided under a COBRA continuation policy qualifies as group health coverage. This distinction is particularly important for individuals moving from the group to the individual market, or from one group health plan to another, since electing this coverage would enable these individuals to maintain continuous creditable coverage. In addition, individuals seeking coverage in the individual market must elect and exhaust COBRA continuation coverage in order to qualify as an ''eligible individual'' in the individual market.

Thus, the statute provide an additional incentive for those individuals who lose coverage when they change jobs to elect COBRA continuation coverage in order to avoid a break in coverage. The statute also provides an incentive for those individuals who are seeking coverage in the individual market without a preexisting condition exclusion. Consequently, we expect more individuals to elect COBRA continuation coverage.

Absent HIPAA's group-to-group portability standards, individuals with employer-sponsored health coverage who have preexisting medical conditions and who change health plans could be denied coverage for their conditions. In that case, individuals would have to pay out of pocket for necessary medial services, or forgo some services, thereby risking adverse health consequences and higher future costs. Other individuals with preexisting medical conditions who change health plans and face preexisting condition exclusions may pay for COBRA continuation coverage in addition to paying for their new health plan to ensure coverage for the preexisting condition. Other workers who are concerned about losing health care coverage would stay in their jobs or turn down job offers.

According to the U.S. General Accounting Office, over 20 million individuals changed jobs in 1993 (General Accounting Office, Report HEHS–95–257, ''Health Insurance Portability: Reform Could Ensure Continued Coverage for up to 25 Million Americans,'' September 1995, pg. 7). Approximately 12 million of these workers had employer-sponsored health care coverage. Additionally, nearly 7 million non-working dependents received employer-sponsored health care coverage through these job changers. According to GAO, many of these 20 million could benefit from the regulation's requirement that prior health care coverage be credited against a new health plan's preexisting condition exclusion period. GAO concludes that the statute will allow approximately 9 million job changers (who have at least 12 months of prior creditable coverage), with 5 million dependents, to change jobs without the

risk of facing any preexisting condition exclusions. Another 3 million workers who change jobs (who have some smaller amount of prior coverage), with 2 million dependents, would face reduced waiting periods before receiving full coverage.

The number of workers and dependents actually gaining coverage for a preexisting condition due to credit for prior coverage following a job change under HIPAA will be smaller than this, however. GAO's estimates of people who could benefit include all job changers with prior coverage and their dependents, irrespective of whether their new employer offers a plan, whether their new plan imposed a preexisting condition exclusion period, and whether they actually suffer from a preexisting condition. Accounting for these narrower criteria, as discussed below, CBO estimates that 100,000 will actually receive additional coverage under HIPAA's credit for prior coverage at any point in time.

In addition, employers, especially smaller employers, that offer health care benefits to their employees often change health insurance issuers, exposing workers or their dependents with preexisting medical conditions to gaps in coverage. Small employers generally change insurance issuers every 3 to 4 years (Senate Committee on Labor and Human Resources, Report 104–156, Oct. 12, 1995, pg. 4). The provisions of the statute that allow crediting of prior coverage should reduce the likelihood of gaps in coverage.

One of the benefits of HIPAA to individuals is that it alleviates ''job lock.'' That is, employees who have stayed in a particular job in order to continue health care coverage can now change to a job that the person might not otherwise have taken because he or she (or a dependent) would have been subject to a pre-existing condition exclusion; or the person can seek coverage in the individual insurance market as a result of HIPAA's provisions requiring guaranteed issue for individuals coming from the group market. According to the GAO, there are one to four million Americans ''who at some time have been unwilling to leave their jobs because of concerns about losing their health care coverage'' (*Health Insurance Portability: Reform Could Ensure Continued Coverage for Up to 25 Million Americans,* HEHS–95–257, September 1995). The GAO notes that ''surveys have found that between 11 and 30 percent of individuals report that they or a family member have remained in a job at some time because they did not want to lose health care coverage.'' Among those individuals, twenty percent stated that pre-existing conditions exclusions constituted the basis for their reluctance to change jobs.

These figures, reflecting individuals stated intentions, may not accurately predict their behavior under different circumstances, however. Moreover, HIPAA's portability provisions will alleviate only some causes of ''job lock''—for example, employees might still be somewhat impeded from taking jobs where no coverage is offered. Eligible individuals might benefit in this case from HIPAA's group-to-individual portability provisions, but would have to pay the premium themselves. Therefore, many individuals who report job lock will not necessarily change jobs as a result of HIPAA.

There also appears to be a difference by age categories of the extent of job lock. The Health and Retirement Study (HRS), conducted by the University of Michigan's Institute for Social Research, which provides an emerging portrait of Americans age 51 through 61 and their spouses, found that job flexibility is a key issue for this age group. ''Almost three-quarters of HRS respondents would prefer to phase down from full-time work to part-time work when they retire, in sharp contrast to actual behavior, where most people who retire leave the workforce entirely. About one-third of the people who would not look for another job are victims of 'job lock,' unable to leave because they might give up valuable pensions or health insurance benefits if they switched employers'' (HRS National Institute on Aging Press Release, June 17, 1993).

Empirical evidence for job lock is mixed. Buchmueller and Valletta found strong evidence of job lock among women but weak evidence among men (''The Effects of Employer-provided Health Insurance on Worker Mobility,'' *Industrial and Labor Relations Review,* volume 49, number 3, April 1996). Monheit and Cooper conclude that the magnitude and importance of job lock, which some studies report as causing a 20 to 40 percent reduction in mobility, is not as great as generally thought (''Health Insurance and Job Mobility: Theory and Evidence,'' *Industrial and Labor Relations Review,* volume 48, number 1, October 1994). Kapur found that job lock does not have a significant effect on job mobility (''The Impact of Pre-existing Health Conditions on Job Mobility: A Measure of Job Lock,'' WP–95–25, Institute for Policy Research), while Gruber and Madrian found that COBRA continuation provisions, and similar state laws (allowing individuals to continue coverage through their employer group health plan for a specified period), have led to a significant increase in job mobility (''Health Insurance and Job Mobility: the Effects of Public Policy on Job-lock,'' *Industrial and Labor Relations Review,* volume 48, number 1, October 1994).

CBO does not quantify potential relief from ''job lock,'' which is a social, rather than a direct, benefit of HIPAA. Because people freed from job lock are going from one type of insurance to another (moving to a different group health plan or to an individual insurance policy under HIPAA portability), CBO also views freedom from job lock as consisting of ''insured expenses * * * transferred among different insurers * * * [that] * * * are not * * * direct costs.''

The majority of evidence indicates that job lock is a concern for many workers. HIPAA will address this concern, though the number of workers who will gain an advantage is unclear and how the value of the benefit can be measured is also unclear.

As the forgoing discussion illustrates, HIPAA's social benefits are expected to be far ranging, but they cannot be meaningfully quantified.

HIPAA might also pose social costs. In particular, increases in premiums under HIPAA's portability and access provisions could erode coverage. These costs are expected to be small, however, particularly in the group market where premium increases are estimated to be very small relative to the overall market.

In summary, HIPAA's portability and access provisions are expected to result in a number of largely unquantifiable social benefits. These include greater continuity of coverage, improved access to health care and possible corollary improvements in health and productivity, improved stability and efficiency in insurance health care markets, eased movement from public assistance to work, and gains in job mobility that are favorable to individual careers and to U.S. competitiveness.

2. Direct Costs and Benefits of HIPAA's Portability and Access Provisions

HIPAA's portability and access provisions impose direct costs and provide direct benefits to a broad range of entities, as well as to individual citizens. Costs will be incurred by employers, group plans, insurance companies and managed care plans (''issuers''); states, in their capacity as regulators, and states and localities as entities providing health care coverage for their employees, retirees and dependents; the federal government as regulator and as the source of health care coverage for employees, annuitants and dependents, and for others through programs such as Medicaid and

Medicare. Benefits will accrue to individuals and to small employers whose access to comprehensive insurance is improved.

A number of studies have evaluated the direct economic impact of the law. The CBO found that ''to the extent that states have not already implemented similar rules, these changes would clarify the insurance situation and possibly reduce gaps in coverage for many people.''

The CBO notes that because HIPAA does not impose limits on premiums issuers may charge, insurance coverage, though available, may be expensive. Consequently, CBO observes that the law would ''make insurance more portable for some people, [but] it would not dramatically increase the availability of insurance in general.'' The controversial question of the extent to which there will be increases in issuer premiums is discussed more extensively below.

CBO prepared estimates of the direct effects of the provisions of the legislation included in these regulations (Letter to the Honorable Bill Archer, August 1, 1996; notes are also from earlier CBO cost estimates; see table below). The direct cost estimates can reasonably be read as representing direct benefits as well, since they generally reflect transfers from a pre-HIPAA payer to a post-HIPAA payer. Certain medical expenses that individuals would pay out of pocket absent HIPAA will be paid by insurance programs under HIPAA. In CBO's estimates, this is reflected as a similar transfer in responsibility for payment from individuals to insurance programs. However, the actual transfer would be more complex. For example, to pay the additional claims, insurers must collect additional premiums, which in turn will be paid by the individuals gaining greater coverage and (in most cases) by other covered individuals, or by their employers. CBO's estimates represent gross costs to plans and gross benefits to individuals, and do not account for these complexities.

CBO COST ESTIMATES AND NUMBER OF PEOPLE AFFECTED

Provision	Yearly cost (direct cost to private sector)	Number of people affected	Other effects; comments
Group: Limiting Length of Pre-Existing Condition Exclusions to 12 Months.	$50 million in first year (1997); $200 million per year in subsequent years.	300,000 people ''would gain coverage'' at any point in time, or 0.3% of people with private employment-based coverage.	Assumes ''surge'' in claims costs; state laws taken into account.
Group: Creditable Coverage Reducing Pre-Ex.	$25 million in first year; $100 million per year thereafter.	100,000 people ''would receive added coverage'' at any point in time.	Small No. of people affected reflects ''restrictive eligibility criteria''.
Group: Above two combined	$300 million	Comments: about .2% of total premiums in group and employer-sponsored market; but may be overstated because HMOs, now the dominant option, often do not use pre-ex exclusions.	
Individual (group-to-individual portability, no pre-existing condition exclusion, no denial because of health condition, guaranteed renewal). First year estimates.	$50 million	45,000 people covered by end of first year.	Provisions would apply in states that currently have 5.4 million of estimated 13.4 million people in indiv. market (but see analyses below).
Individual: Subsequent years	$200 million by fifth year	''In about four years, the number of people covered; would plateau at around 150,000''.	Level of premiums to be charged is unknown; states may limit allowable premiums, but such limits may impose indirect costs.

Virtually all of the insurance market reform provisions of HIPAA that are implemented through these regulations have the potential to increase premiums in the group market. Group plans may have to bear higher costs because of the statutory limits on pre-existing condition exclusions and the creditable coverage provisions reducing the application of permissible pre-existing condition exclusions. CBO has estimated the total costs of these two provisions at $300 million annually after full implementation, or 0.2% of total premiums in the group market. This reflects coverage for services which would have been excluded under current law due to pre-existing condition exclusions in insurance contracts, but which would be covered under HIPAA due to HIPAA's 12-months cap on exclusions and its provisions requiring credit for prior coverage.

CBO's $300 million cost figure reflects only the costs of the statute's limits on pre-existing conditions exclusion, and its prior creditable coverage provisions. It does not include the administrative costs to plans and issuers of the HIPAA's certification requirement, which the Department of Labor has measured in its Paperwork Reduction Act analysis below. Similarly, CBO's $300 million figure does not include any other increased premium costs that might be associated with the statute's health status nondiscrimination or guaranteed renewability provisions. CBO's figure does try to estimate (a) how many people would benefit from the statute's limits on preexisting condition exclusions, and its prior creditable coverage provision, and (b) the average cost to insurers of the extension of coverage to those individuals.

Preexisting condition exclusion limitation: CBO derived its $300 million figure by estimating that approximately 300,000 people with private employment-based coverage would gain coverage under the statute's preexisting condition exclusion limitation provision, at a direct private sector cost of $200 million per year. CBO adjusted this estimate to exclude people who reported being limited by a preexisting condition restriction, but who also had secondary health coverage to pick up the cost of their preexisting condition. CBO reasoned that under these circumstances, the preexisting condition exclusion limitation would not raise the aggregate costs imposed on employment-based plans. CBO likewise adjusted its estimate to reflect the existence of state laws which limited preexisting condition exclusion limitations to one year or less and require that previous coverage be credited against those exclusions. These state laws generally apply to group plans of 50 or fewer employees, and do

not include self-funded health benefit plans subject to ERISA rather than state laws. Since plans covered by such state laws would not have to change their provisions as a result of HIPAA, CBO lowered its initial estimate of the people affected by the bill.

Crediting Prior Coverage: CBO's $300 million figure also includes an estimate that 100,000 people, at a private sector cost of about $100 million per year, would receive some added coverage as a result of HIPAA's prior creditable coverage provision.

CBO reports that these estimates are subject to considerable uncertainty for several reasons. First, they are based on individuals' responses to surveys, which should be treated with caution. Likewise, unforeseen changes in the health insurance market, such as changes in medical costs or the growth of managed care plans, could raise or lower the direct costs of the law. Increases in medical costs would obviously raise the costs, while the expansion of HMO penetration in the market would tend to reduce the law's effect, since HMOs generally do not use preexisting condition exclusions.

CBO also reports that in particular, distribution of the costs these provisions would be uneven across health plans. CBO notes that ''[o]nly plans that currently use pre-existing condition exclusions of more than 12 months would face the $200 million direct costs of the statute's exclusion limitation.'' Data from a Peat Marwick survey used by CBO indicate that 2.5% of employees are in such plans. Consequently, ''the costs to health plans that use long preexisting condition exclusions would be about 4.5% of their premium costs.'' Likewise, only those plans that use preexisting condition exclusions would face the $100 million direct cost of the mandate to credit prior coverage against the preexisting conditions exclusion. CBO reports that ''almost half of employees are in such plans—implying that the plans directly affected by this mandate would have direct costs equal to about one-tenth of one percent of their premiums'' absent the statute.

The increased costs may be shared by insurers, plans, and insured individuals. Additionally, costs also may be borne directly by plans that an issuer ''experience rates,'' i.e. the insurer determines rates according to the utilization of the group being insured. Costs may also be borne by others insured through an issuer that uses some form of community rating, which spreads risk over a greater number of ''insured lives'' beyond the particular group that is the source of the additional costs. To a certain extent, a group may have a choice in the degree of burden: if the group knows that its members incur lower costs than the average of the issuer's pool, the group can avoid a community-rated pool by becoming self-insured.

There is also the possibility that group market premiums may increase as a result of the HIPAA reforms in the individual market if insurers spread the costs of claims in the individual market across a pool that includes group members. HIPAA expressly provides for this possibility as one of the elements of an acceptable state alternative mechanism. (Such issues relating to the individual market are discussed in more detail below.)

Assuming that the CBO is correct in projecting that the premium effect translates into 0.2 percent of total premiums in the group market, a minimal premium effect is likely.

CBO did not quantify the cost of nondiscrimination or special enrollment provisions.

With respect to nondiscrimination, approximately 135,000 workers reported in 1993 that they were excluded from their employer's health plan because of their health, according to DOL tabulations of the April 1993 Current Population Survey. In general, HIPAA would require plans to offer benefits to such individuals.

With respect to special enrollments, HIPAA provides that individuals, under certain conditions, are permitted to enroll for health coverage on the same terms as new participants, rather than as late enrollees. The conditions triggering eligibility for special enrollment generally include events in which an individual loses coverage (such as when a spouse changes jobs when couples legally separate or divorce) or joins a family that is eligible for coverage (through marriage, birth, or adoption).

Special enrollment requirements benefit individuals. Absent this provision, eligible individuals could be subject to pre-existing conditions exclusion periods of up to 18 months, and therefore would might need 18 months of prior creditable coverage to fully offset a preexisting condition exclusion period. Under the provision, eligible individuals' exclusion periods are limited to 12 months. This special enrollment provision also permits eligible individuals to enroll immediately in plans which otherwise prohibit late enrollment, or which allow late enrollments only during annual open enrollment periods.

Considering some of the major groups that could benefit, the Departments estimate that 734,000 families would gain eligibility for special enrollments due to marriage, as would 701,000 due to births, and 292,000 due to job changes in the family. These estimates, based on the Survey of Income and Program Participation, reflect an annual count of such events following which the relevant spouse or new born was uninsured, or covered under an individual policy or Medicaid.

Special enrollments may result in a marginal increase in aggregate premiums and claims paid, but no change in average premium levels for any one individual, since eligible individuals are not likely to have any higher health care costs than the average new health plan participant.

In summary, HIPAA's portability and access provisions will result in a number of direct costs and benefits. These direct costs represent transfers among parties and not changes in overall social welfare. CBO estimates that HIPAA's group portability provisions will result in $300 million of additional annual direct costs to insurance programs, which in turn represents a direct benefit of $300 million in added coverage for individuals. Additional direct costs and benefits will arise from similar extensions of coverage under HIPAA's group-to-individual portability, special enrollment, and nondiscrimination provisions. Various estimates of the costs and benefits of the group-to-individual provisions are offered below. Costs and benefits of the special enrollment and nondiscrimination provisions have not been quantified.

3. Affected Market Segments

(1). Impact on State, Local and Tribal Governments

The statute establishes federal standards and allows for federal enforcement in an area that has traditionally been the domain of the states, the regulation of insurance. However, the statute also permits states to use alternative, state-specific mechanisms to achieve greater portability and continuity in a manner similar to the federal standards. Many states have undertaken insurance reforms similar to the HIPAA provisions and are likely to seek approval for the continuation of these alternative mechanisms. The statute provides that enforcement of the requirements of the law will be the responsibility of the states (for those states implementing alternative mechanisms as well as for those states implementing the federal standards), unless a state is unwilling or unable to enforce the law. Only in the latter case of unwillingness or inability to enforce the law will the federal

government implement and enforce the law in a given state. It is highly unlikely that there will be any instance of the federal government assuming such a role, with the exception perhaps of the territories. There is no federal financial assistance or resources to implement these provisions.

The CBO has generally determined that there will be a negligible impact on these governmental entities, even in the event that, in their capacity as sponsor of employee health care coverage, they choose not to ''opt out'' of having certain provisions of the statute apply to them. HIPAA provides that states and localities that self-insure their health care coverage for employees, are permitted, under the statute, to ''opt out'' of the provisions of the law affecting them with respect to rules governing pre-existing condition limitations. Some entities that have the option available will ''opt out.'' However, this does not relieve them of the responsibility of providing certifications of creditable coverage for their covered individuals. HIPAA does not preempt state and local government collective bargaining laws. If there were no opt-out entities, CBO projects that state and local governments would see an increase in health care costs of less than $50 million, or 0.1% of the $40 billion annually in state and local total health insurance expenditures.

Those who would benefit from the imposition of HIPAA requirements on state and local governments are individuals who are subject to a pre-existing condition exclusion that would have been shortened in length by HIPAA either under the 12-month limit or the crediting or prior creditable coverage provision. As the CBO points out, this benefit (for some) is coupled with a cost to (all covered) individuals because it is assumed that states and localities would pass the cost off to their employees through reduced compensation or benefits.

According to CBO, the impact of the law on the states in their capacity as regulators enforcing new insurance provision is marginal. For states that have been enacting insurance reform measures in the small group and individual markets, it could be argued that HIPAA provides a benefit to the extent that the introduction of federal standards facilitates the states' ability to continue insurance reforms in these markets. According to the Intergovernmental Health Policy Project (IHPP), in a report dated June of 1996, all but two states had enacted some type of small group market reform, and 35 states had enacted some type of individual insurance market reform. The presence of a federal standard that may be viewed as constituting a ''floor'' of requirements imposed on issuers in these two markets may also benefit the states.

The individual insurance market has traditionally been regulated by the states, and Congress intended that, to the maximum extent possible, the states should continue this regulatory role. To this end, the law provides states with these options: (1) implement an alternative, state-specific mechanism to ensure access to individual health care coverage; (2) adopt and administer the federal standards of HIPAA; or (3) allow the federal government to administer the law.

In devising the first option, the implementation of an alternative mechanism, Congress afforded states a good deal of flexibility in establishing an alternative mechanism. At least 30 states are expected to implement alternative mechanism, each unique to the state's demographics and market conditions. States are encouraged to explore innovative options and intend to afford states as much flexibility as possible in the design of their alternative mechanisms. Throughout the process of reviewing proposed alternative mechanisms, the states' need for flexibility must be balanced with the rights of the individuals afforded protection under the law.

Our main concern is that the primary goal of HIPAA be achieve: that eligible individuals are guaranteed coverage in the individual market, to the extent that policies are available, without a preexisting condition exclusion period. HHS intends to review states' mechanisms with this goal in mind; so the information presented should present a clear picture of the mechanism's impact on eligible individuals. The information requested in these regulations (section 148.126(h)) closely parallels the statutory provisions. While such information collection requirements may impose a burden on each state that chooses to implement an alternative mechanism, such information is necessary in order to effectively evaluate the mechanism and ensure that the mechanism will provide eligible individuals the protection guaranteed by the law.

The states are unlikely to choose the option whereby the Secretary (HCFA) implements and enforces HIPAA in the states. Eight states, however, may choose the ''federal fall-back'' option of incorporating the HIPAA standards into state law rather than developing an alternative mechanism.

The statutes provides that a state is presumed to be implementing an acceptable alternative mechanism as of January 1, 1998, unless the Secretary of HHS notifies a state of her disapproval of the mechanism by July 1, 1997. In states where the legislature does not meet in a regular session between August 21, 1996 and August 20, 1997, the state is presumed to be implementing an acceptable alternative mechanism as of July 1, 1998. To our knowledge, only Kentucky qualifies for this exception. The statute also provides an extension. Before making an initial determination, HHS intend to make every effort to consult with the appropriate state officials. After consultation with appropriate state officials, should there still be cause for disapproval, HHS will allow the state a reasonable opportunity to revise the mechanism or submit a new mechanism. Throughout this process, HHS may require further information from state officials regarding particular aspects of their insurance market reform. While such requests for information may also impose an additional burden on the state, this information will be necessary to insure that the mechanism will provide the protections guaranteed to eligible individuals under the law.

As required by law, the Secretary of HHS will review each alternative mechanism every three years. In this respect, the regulation adheres closely to the statutory burden and merely clarified that resubmission is required on every three-year anniversary of the last submission date. HHS has also provided a process for review of future mechanisms, should a state may wish to revise an existing mechanism or propose a new mechanism.

In addition to implementing an alternative mechanism, a state may choose to adopt and administer the federal statutory provisions. Our regulations in this regard do not differ from the statutory provisions. As noted above, it is likely that up to eight states would choose this option.

Finally, a state may choose to allow the federal government to administer the federal statutory provisions in the state. Although this is a possibility contemplated in the statute, it is unlikely that any state would choose this option. However, the impact of the regulations that implement this option is discussed below.

In states that have an acceptable alternative mechanism for ensuring access to individual insurance or health care coverage, the implementation of laws and determination of compliance with those laws is exclusively a state matter. For other states, HIPAA gives the Secretary authority to issue

regulations to carry out the implementation and enforcement of HIPAA provisions for the states that choose the ''federal fallback'' option (using federal standards), and for states in which the federal government will directly administer the HIPAA provisions. These regulations specify the following:

- Documentation that must be submitted to the state (federal default) or to HCFA (direct regulation by the federal government) demonstrating compliance with the statute;
- The manner in which an insurer markets individual policies;
- The procedure and time frames the issuer follows in determining whether someone is an eligible individual, and the effective date of the individual's coverage;
- The procedure to follow for a request to limit enrollment in the case of an HMO's or insurer's capacity limitations (network capacity or financial capacity); and
- The procedure for determining whether the benefit packages offered in the individual market are consistent with statutory requirements.

In states electing the federal fall-back approach, the state determines the level of documentation required to establish compliance with the HIPAA provisions. The Departments do not know the extent of burden states will impose on plans as a result of HIPAA. Although there is not likely to be direct federal enforcement in any state, in those states in which HCFA does administer the law, issuers have 90 days after July 1, 1997, to provide documentation concerning individual policy forms the issuer already markets; and 90 days prior to the beginning of the calendar year prior to marketing a new policy form. With regard to these time frames, the 90-day period should not be burdensome. Much of the information required to be submitted regarding the policy forms in the individual market is material the issuer will generally have filed with a state insurance commissioner (''information on all products offered in the individual market''; marketing material, often submitted to states on a ''file and use,'' or informational basis). For such information the submission to the federal government is burdensome only in that it is duplicative of material given to the state. The HIPAA-specific materials are generally not duplicative and constitute a burden on issuers to provide HCFA with the following information:

- An explanation of how the issuer is complying with the provisions of HIPAA, including how the issuer will inform eligible individuals of available policy forms;
- Premium volumes or actuarial values (depending on which election is made regarding compliance with rules on the type of policy to be offered); and
- A description of the risk spreading/financial subsidization mechanism to be used for individual policy forms.

The last two items represent requirements of the statute, while the first item is necessary to ensure that there is effective implementation of the statute. For the first item, issuers will have to become familiar with the provisions of HIPAA in order to comply with the documentation requirement, which can be a considerable burden, but the other information requirements should not be burdensome. One way in which these regulations lessen the burden for plans electing to offer ''representative coverage'' rather than the most popular policy forms is by not prescribing the method of determining the actuarial value of representative coverage. Issuers may make their own determinations of actuarial value and present them to HCFA for verification.

(2). Impact of the Law in Different States

The impact of the law on individuals, employers, group plans, and issuers may vary somewhat from state to state. Many state reforms resemble HIPAA's portability provisions, often meeting or exceeding particular HIPAA standards. The CBO notes that it ''lowered its initial estimate of the number of people affected by the bill'' in recognition of such state reforms. Where state laws resembling HIPAA exist, the marginal impact of HIPAA is reduced.

The degree to which a state's reforms lessen the impact of HIPAA's portability provisions depends on the degree to which the state's requirements exceed these provisions, and on what proportion of insured individuals in the state are covered by the state's reforms. In general, individuals not covered by state reforms are those enrolled in programs for which such state reforms are preempted by federal law. These include individuals enrolled in federal programs such as Medicare and the Federal Employees Health Benefits Program or in self-insured ERISA plans. Individuals enrolled in ERISA plans that are not self insured are covered by such state reforms that are specifically saved from preemption by HIPAA.

According to a study by Jacob Klerman of RAND, *New Estimates of the Effect of Kassebaum-Kennedy's Group-to-Individual Conversion Provision on Premiums for Individual Health Insurance* (1996), 42 states have guaranteed issue rules in the individual market or a high-risk pool that could qualify the states as meeting the alternative mechanism requirements of HIPAA. This is consistent with other information the Departments have received to the effect that only eight states may adopt the federal HIPAA standards (to be administered by the states). (The individual market issues are discussed in greater detail below.)

An analysis prepared by staff of the Pension and Welfare Benefits Administration (PWBA) of the Department of Labor found, for the group market, that 41 states have small group guaranteed issue; of that number five do not conform with (or are not more generous than) HIPAA rules on guaranteed issue, and 21 define a small group differently from HIPAA by starting the small group category at three individuals (rather than HIPAA's two)—the situation in 11 states—or by extending the provisions to groups not reaching HIPAA's 50 (4 states define a small group as up to 49; one as 40; and ten as either 24 or 25). These states are likely to make relatively small changes as necessary to conform their laws to HIPAA standards. The National Association of Insurance Commissioners has also engaged in extensive efforts to help the states conform their laws.

Thirty-one states already have provisions which require that group health plans offer additional enrollment opportunities to employees under circumstances similar to HIPAA's special enrollment opportunities. The statute expands the state baseline by adding legal separation as a grounds for special enrollment eligibility, and expressly includes COBRA as prior group health coverage. The statute further requires retroactive coverage for newborns and adopted children if special enrollment is requested within 30 days of birth, placement for adoption, or adoption. Current state requirements reduce the overall economic impact of the special enrollment requirements on the group health market.

For pre-existing conditions limitations in group health plans, HIPAA provides that the maximum allowable period is 12 months (''look-forward''), or 18 months for a late enrollee (someone enrolling outside of an initial or special enrollment period) for conditions arising within the six months (''look-back'') preceding the enrollment date in a group health plan. HIPAA also provides that prior coverage for which there was not a break in coverage of 63 days or more would be credited against the pre-existing condition exclusion. Using the PWBA analysis and information from the IHPP,

as of mid-1996, 30 states had time limits on pre-existing condition exclusion periods that are the same as, or more favorable to individuals, than the HIPAA provisions for the group market; and 14 other states have limits on pre-existing condition time limits. Among these 44 states, ten states allow crediting or prior coverage for which the duration of the break in coverage equals or exceeds 63 days (more generous than HIPAA); eight states allowed breaks in coverage of 60 days; 18 states allowed 30 or 31 days of a break in coverage; and four states had no crediting of prior coverage. State laws which exceed HIPAA standards will not be pre-emptied by HIPAA.

(3). Group Plans

HIPAA sets minimum standards for all group health plans, including self-funded plans that are shielded by ERISA from states' HIPAA-like requirements. The General Accounting Office has estimated that about 27% of the Nation's population received health care coverage through ERISA self-funded plans (17%).

Although the GAO report indicated that the number of people covered by self-insured plans is increasing, other data indicate that there has been a decline in such coverage because of the increasing number of individuals covered by HMOs that operate as insured plans. However, an HMO network may constitute an exclusive provider organization for a self-insured plan. Liston and Patterson (*Analysis of the Number of Workers Covered by Self-Insured Health Plans Under the Employee Retirement Income Security Act of 1974—1993 and 1995,* prepared for the Henry J. Kaiser Family Foundation, August 1996) found that from 1993 to 1995 the number of Americans covered by fully or partly self-insured plans declined from 37.6 million to 32.5 million (a 14% decline). The rate of decline was greatest in smaller firms: for firms with fewer than 100 workers, the number of workers covered under fully or partially self-insured plans declined form 8.2 million to 5.4 million (a 34% decline). For firms with 25 or fewer employees, the numbers declined from 2.9 million to 2.2 million from 1993 to 1995 (a 24% decline).

The relevance of these numbers to an analysis of HIPAA has to do both with the number of people that can potentially benefit from the HIPAA provisions (if the employees moving to ERISA-insured plans are in states that already have provisions similar to HIPAA, effects will be smaller), as well as the related issue (partially a consequence of the former) of the extent to which the small group market in a given state may be ''disrupted'' because of the effects of HIPAA. (For example, will the HIPAA provisions create a situation in which either insurers will abandon markets or employers will discontinue health care coverage?) Although the Departments' economic impact analysis does not contain a state-by-state analysis of the relationship between employees covered under self-insured plans (and any changes in those numbers) and the states that have reforms similar to HIPAA, Liston and Patterson found that the South was the only region of the country in which there was an increase in the number of employees covered by self-insured or partially self-insured (reflecting the lower penetration of HMOs in Southern states). Data about individual states do not appear to be available. A recent GAO report notes that ''no analysis exists on the number of individuals affected by these state [insurance] reforms'' (*Health Insurance Portability: Reform Could Ensure Continued Coverage for Up to 25 Million Americans,* HEHS–95–257, September 1995).

For 1995, the South (stretching, under the Liston-Patterson definition, from the South Atlantic states to the West South Central states of Arkansas, Louisiana, Oklahoma and Texas) had 35% of all employees covered by self-insured or partially self-insured plans, while those same states had 30% of the private-sector employees with health care coverage. Three of the seven states that had no pre-existing condition limitations regulations in the PWBA analysis were Southern states; of the 11 states that had no guaranteed renewal provisions for group health plans, four were in Southern states. It would appear then, that to the extent that practices in the ERISA small group market in Southern states diverge significantly from HIPAA provisions employers will have to adhere to, there are possible major impacts of HIPAA in those markets.

(4). The Individual Insurance Market

In the individual insurance market the statute provides for guaranteed issue of a policy to ''eligible individuals'' (individuals coming from the group market, who have 18 months of aggregate creditable coverage, from any of various types of health care coverage). In addition to this guaranteed issue requirement, insurers are not permitted to apply any per-existing condition exclusions to this group. Individual policies are guaranteed renewable except under certain circumstances. The statute does not place any limits on the premiums insurers may charge for the policies made available to eligible individuals. States are permitted to have alternative mechanisms that achieve the same ends as the HIPAA requirements, though any alternative is required to have no pre-existing condition exclusions.

The individual insurance market reforms are of greatest benefit to individuals who voluntarily or involuntarily leave their jobs and wish to maintain some level of health insurance. As discussed above, the availability of individual insurance may decrease ''job lock'' by allowing people to maintain continuous protection as they move between jobs. Individuals who enter the individual market from the group market may choose to do so because their new employer may not offer insurance or the employer's coverage is limited; or they may expect to be without a job for a period of time (for example, because they are ''early retirees'' who do not yet have Medicare entitlement and do not have employment-based retiree health care coverage). The CBO projects, in data cited above, that the number of people benefiting from the HIPAA (getting coverage when it would have been denied absent HIPAA) individual market reforms would ''plateau'' at the 150,000 range by the fourth year of the law. The GAO (HEHS–95–257, cited above) determined that about two million people each year could convert to individual insurance from group coverage, based on turnover rates among small employers and rates of COBRA continuation of coverage.

Individual market premium effects vary by state. In state regulatory activity, fewer states have provisions similar to HIPAA's in the individual market as compared to state reforms in the small group market. HIPAA will affect the individual insurance markets in many states. The RAND and IHPP data indicate that only eleven states have guaranteed issue laws for the individual market. Eight additional states have an insurer (Blue Cross-Blue Shield) offering open enrollment in the individual market. Twenty-three states have laws limiting the period of pre-existing condition exclusions, but only one state allows no such exclusion period, with most states allowing a 12-month exclusion period with a 6- or 12-month ''look back.''

One of the most contentious issues in discussions of HIPAA's effect on the individual insurance market has been the issue of premiums in that market. HIPAA does not impose any rating requirements on insurers in the

individual market, meaning that the insurers are free to price their individual products in any manner that is consistent with state law. IHPP data show that for the individual market, seven states have rating bands (premiums must be within certain upper and lower bounds in relation to a ''standard'' premium), and eight states require community rating of some form (a form of rating that can be roughly described as rating across a larger pool of insured individuals, for example, across all of an issuer's insured individuals, across defined age categories, etc.). Rating bands and community rating requirements have the same intended effect as HIPAA, to increase the availability of insurance, but they additionally seek to assure affordable coverage. There will be interactions between the HIPAA approach to increased availability (guaranteed issue and elimination of pre-existing condition exclusions for certain individuals with prior coverage) and the rating approach in those states in which guaranteed issue rules and pre-existing condition exclusion rules differ from HIPAA's provisions.

Affordability of individual coverage is a significant issue with HIPAA. The Health Insurance Association of America (HIAA) has projected that the individual market reform provisions of HIPAA will cause an eventual 22% increase in premiums in that market (''The Cost of Ending 'Job Lock' or How Much Would Health Insurance Costs Go Up If 'Portability' of Health Insurance Were Guaranteed?'', February 20, 1996). HIAA projects, on that basis, that eventually 500,000 to one million people would leave the individual insurance market because of rate increases necessitated by the HIPAA reforms. HIAA bases this estimate on the current number of people insured in the individual market, the number of new entrants in the market, their costs, and the price-sensitivity of purchasers of insurance.

Other studies have arrived at conclusions that are very different from the HIAA conclusions. The main difference with other studies is that HIAA assumes that HIPAA will cause states to impose restrictions on the level of premiums insurers may charge in the individual market. There are no such requirements in HIPAA. The HIAA assumes that people currently covered in the individual market will be included in the rating pool that includes individuals who are newly insured under HIPAA provisions. The American Academy of Actuaries (AAA), for example, found that the premium increases in the individual market would be in the range of two to five percent, and the increases would take effect over a longer time span that one year. The AAA took into account current state laws, including state laws related rate restrictions in the small group market.

Jacob Klerman, or RAND, examined HIAA's assumptions and methodology and found that (a) using HIAA's assumptions, but employing more up-to-date or otherwise improved data (''better estimates of the underlying figures''), the increase in individual premiums would be 5.7%; and (b) using different assumptions, the premium effect would be 2.3% and may be as little as 1% or less (*New Estimates of the Effect of Kassebaum-Kennedy's Group-to-Individual Conversion Provision on Premiums for Individual Health Insurance,* RAND, 1996). For the latter projections, Klerman assumed a different level of claims costs for new entrants (150%, based on studies of the costs for COBRA continuation policies, versus the HIAA's 200%), that the premium pricing for the new policies would not be pooled with others in the individual market, and that state laws would have effects that the HIAA analysis did not consider. Note that, as with the GAO report quoted above, these analyses are based on an earlier version of an insurance reform bill, S. 1028, in which the guaranteed issue was available only to those with 18 months of group coverage. This analysis does not measure how many more people are encompassed in the larger HIPAA ''eligible individual'' group comprising individuals whose last type of coverage was group coverage but who had prior coverage during the 18-month period from a different source; this will slightly increase the cost.

Another study, done for HHS, by Actuarial Research Corporation (ARC), had results that were similar to the RAND results. ARC projects possible increases in individual premiums ranging from 1.4 percent to 2.8 percent.

K. Statutory Provisions Affecting Administrative Processes

While these rules implement the statute's goal of expanding coverage and portability of coverage by reducing the use of pre-existing condition exclusions, for purposes of performing this economic impact analysis, it is appropriate to break the regulations down into the following components: certifications and notices informing individuals of their right to request a certification; notification of the application of a pre-existing condition exclusion period; alternative methods of crediting coverage; and guidelines for implementing the statue's special enrollment requirements. The notice and notification requirements are largely a result of this rulemaking. The certification requirements are largely prescribed by HIPAA, with certain aspects that mitigate the impact of the statute resulting from this rulemaking. While the alternative method of counting compliance is authorized by HIPAA, the classes and categories of coverage to be measured were created at the discretion of the three Departments.

1. Staggered Effective Dates

In general, the effective dates of HIPAA's group health plan provisions are tied to plans' fiscal years and to the expiration of collective bargaining agreements under which some plans are maintained. Provisions whose effective dates are so tied included those pertaining to pre-existing condition exclusions, crediting prior coverage, and special enrollments. (The effective dates of HIPAA's certification provisions are not so tied.) Non-collectively bargained plans become subject to these provisions of HIPAA in the first plan year beginning on or after the July 1, 1997. Collectively bargained plans become subject the first plan year beginning on or after the later of July 1, 1997 or the expiration of a collective bargaining agreement that was in place prior to HIPAA's date of enactment, August 21, 1996.

More than one-half of plans begin their fiscal years on January 1. Therefore, there is a large concentration of plans and participants that become subject to HIPAA in January 1998. Overall, the proportions of participants and plans (respectively) that become subject to HIPAA in 1997 are 15 percent and 24 percent; in 1998, 68 percent and 69 percent; in 1999, 11 percent and 4 percent; and in 2000, 5 percent and 2 percent.

The compliance costs of these regulations regarding certification and notice, pre-existing condition exclusion notification, and notice of enrollment rights was estimated based upon information in the public domain and data available to the Departments on industry practices. To derive data on health coverage and employment shifts of individuals, for the purposes of this analysis the Departments referred to data collected from the Census Bureau's Current Population Survey and Survey of Income and Program Participation, as well as the National Health Interview Survey and the Department of Labor's database of 1993 Form 5500 information, the most current available. Supplemental data on employer-sponsored health care was obtained

from the Peat Marwick Benefits Survey and the BLS Employee Benefits Survey.

2. Initial vs. Ongoing Costs

Costs may be separated into initial costs and ongoing costs. Initial costs of the new certification, notice, pre-existing condition exclusion notification, and special enrollment requirements have several components, including capital costs of preparations for collecting information such as purchasing or upgrading computers and software, and record storage facilities. Initial costs may also be expected to include programming or reprogramming automated systems to track periods of prior creditable coverage, and to track plan participants and the type of coverage they hold, e.g. individual or family coverage. Initial costs also include up-front expenditures for revisions of plan documents to comply with the new statutory and regulatory requirements. These costs were annualized over the estimated ''life'' of the regulation, 10 years, in order to show such costs on an annual basis. It is estimated that the 15,604 plans that will process certifications internally (rather than use a service provider) will incur an average cost of $5,000 per plan to revise their automated records systems to accommodate this information for a total cost of $78 million over 10 years beginning in 1997. Presented here as direct costs, initial costs are a component of overall social costs.

Ongoing expenditures incurred annually include the costs to group health plans, health insurance issuers and self-funded plans of performing the continuing administrative tasks of calculating periods of creditable coverage, printing forms for notices, preparing an original and a copy of notices and certifications for participants with dependants having identical coverage, and mailing these documents to individuals. Also included in ongoing expenditures is the cost to plans which use pre-existing condition exclusions to notify participants of the plans' provisions, and calculating periods of pre-existing condition exclusions for new participants, and issuing an individualized notification, as necessary, to each individual who would be subject to a pre-existing condition exclusion of any duration. Total annualized initial costs and ongoing costs were aggregated to estimate total annual costs.

3. The Certification Process

The statute specifies that every individual leaving a group health plan, ending COBRA coverage, ending individual insurance coverage, or leaving other types of health coverage must receive a written certification of creditable coverage containing specific information about the individual and his or her coverage, including information on the coverage of dependents. This requirement constitutes a burden in information collection and processing.

Despite recent incremental state reforms in the laws affecting the group health insurance market, no states have required group health plans or health insurance issuers to provide participants and their dependents with certifications or notices regarding prior health coverage. Therefore, the statute imposes discrete new burdens on all group health plans and health insurance issuers in connection with providing certifications, and issuing to individuals of their right to receive a certification.

Respondents preparing certification forms must collect the appropriate information about a person, prepare a certification form, and, in most cases, mail the information. One certification can serve to provide information about dependents covered under the same policy. The respondent may have to prepare multiple certification forms for an individual, or for dependents, in the event that the certificate is lost or misplaced. The process may require the development of new information systems or, more likely, modifications to existing information systems, to collect and process the necessary information.

The statute makes the certification requirement a key implementation component of the portability provision in both the group and individual markets.

The cost of providing certifications for private group plans (absent the regulatory relief described below) is estimated to be at least $98 million for 69 million certifications in 1997 and $84 million for 59 million in each subsequent year. Absent transition relief provided under the regulations, early year costs could be far higher. The direct cost of certifications contributes to the overall social cost of the statute.

L. Impact of Regulatory Discretion

These regulations mitigate the impact of the statutory requirements on the regulated public, while preserving protections, in several ways. These regulations will reduce implementation costs.

The Departments exercised discretion in connection with group plan provisions, as follows:

First, intermediate issuers will not have to issue a certification when an individual changes options under the same health plan. In lieu of the certification, they could simply transfer the start and stop dates of coverage to the plan. An individual would retain the right to get a certification upon request if they leave the plan.

Second, telephonic certification will fulfill the requirement to sent a certification if the receiving plan and the prior plan mutually agree to that arrangement. The individual can always get a written certification upon request.

Third, the requirement to send certifications on June 1, 1997 to those who have left plans between October 1, 1996 and May 31, 1997 can be satisfied by sending a notice; the Departments have offered a model notice in these regulations for that purpose.

Fourth, until July 1, 1998, plans and issuers that do not collect individual information on dependants can comply with the requirement to send each dependant a separate certification by simply listing the category of coverage (e.g., individual, spouse or family).

Fifth, in situations where the issuer and the plan contract for the issuer to complete the certifications, the plan would not remain liable if the issuer failed to send the certifications.

Thus, plans would not need to keep data and files on this information.

Sixth, the period of coverage listed on automatic certifications will only be the last continuous period of coverage without any break. This is the most efficient and simplest method of record keeping for plans and issuers.

Seventh, the period of coverage contained in the on-request certification will be all periods of coverage ending within 24 months before the date of the request. Essentially, a plan may simply look back two years and send copies of any automatic certifications issued during that period.

The above reductions in burdens on plans and issuers may cause more frequent circumstances in which participants are required to prove creditable coverage and the status of their dependants. In order to help offset some of the additional burdens that will be shifted to the participants, the regulations provide the following protections:

First, if an individual is required to demonstrate dependent status, the group health plan or issuer is required to treat the individual as having furnished a certificate showing the dependent status if the individual attests to such dependency and the period of such status, and the individual cooperates with the plan's or issuer's efforts to verify the dependent status.

Second, a plan shall treat an individual as having furnished a certificate if the individual attests to the period of creditable coverage, and the individual also presents relevant corroborating evidence of some creditable coverage during the period and the individual cooperates with the plan's efforts to verify the individual's coverage.

Third, plans and issuers that impose preexisting condition exclusions periods must notify participants of this fact. They must also explain that prior creditable coverage can reduce the length of a preexisting condition exclusion period and offer to request a certification on the participant's behalf. An exclusion may not be imposed until this notice is given. This is beneficial to participants insofar as it forewarns them of potential claim denials and enables them to more easily exercise their right to protection from such denials under HIPAA's portabliity provisions.

Fourth, a plan that imposes a preexisting condition exclusion must notify a participant if the individual's creditable coverage is not enough to completely offset the exclusion period, and give the individual the option to provide additional information. An exclusion may not be imposed until this notice is given. This provides participants an opportunity to correct any failure to establish credit for prior coverage before a claim is denied.

Under the regulation, in the group health plan enrollment materials ordinarily provided to most new participants, plans that contain pre-existing condition exclusion provisions must also provide notice that the plan contains these provisions, that the participant has the right to prove prior creditable coverage, including the right to secure a certificate from a prior plan or issuer, and that the new plan will assist in obtaining the certificate. Those plans using the alternative method of crediting coverage also must disclose their methods to the participant, including an identification of the categories of coverage used.

In addition, a plan seeking to impose a pre-existing condition exclusion on a participant or dependant must inform them in writing of the determination that they lack adequate prior coverage, and provide an opportunity for the individual to submit additional materials regarding prior creditable coverage, and provide an explanation of any appeals procedure.

The annual cost of these disclosure procedures to private group plans is estimated to be $280,000 in 1997, $2.1 million in 1998, and $1.9 million in 1999 (about 20 cents per notice). The same costs for state group plans would be $25,500, $51,000, and $51,000, respectively. For local plans, they would be $42,000, $84,000, and $84,000. The Departments believe the marginal burden of the notice will be modest because, irrespective of the notice requirement, under the statute plans must make this determination before imposing a preexisting condition exclusion. Comments are encouraged as to whether this assumption is appropriate. These costs do not include any burdens attributable to the use of the alternative method of crediting coverage, since it is assumed that any plans incorporating this method will do so only if the net cost is less than using the standard method. Under the alternative method of crediting coverage, the regulation allows the prior plan to charge the receiving plan using the alternative method for the reasonable costs of providing evidence of classes and categories of prior health coverage.

On balance, to the extent that the Departments have exercised regulatory discretion, they have acted to reduce compliance costs. This is particulary true with respect to the certification process.

These regulations attempt to reduce the burden of certifications by limiting the amount of information that needs to be reported and offering a model form that can be used to satisfy the requirement of the law. In the absence of a written certification, the regulations allow for alternative means of establishing creditable coverage, which includes having the individual present documentation of coverage or conducting telephone verification with the entity that previously covered the individual.

During a transition period, respondents may provide individuals with a notice that they have the right to receive a certificate of creditable coverage, a requirement that can be met by including the information in an evidence of coverage or other generic document individuals receive that contains information about their policy. This notice may be provided in lieu of a certificate for events that occur on or after October 1, 1996 but before June 1, 1997.

The cost to issuers of the certification requirement is primarily in the paperwork production of the certification form. All health insurance issuers are likely to have the kinds of systems in place to be able to produce the information necessary for a certification, although there will be moderate systems start-up costs, and some systems modifications for insurers and HMOs. Systems modifications may also be necessary to retain the data for the certificates for several years, but, like the other requirements, this burden should also be limited. The model certification form of the Preamble contains the kind of information that is routinely used as the basis for claims processing by a health insurance issuer or by an HMO (for example, in adjudicating an out-of-network claim).

For example, in order to deny a claim dating from a period prior to the beginning date of coverage of a particular individual, the issuer's information system could determine that (1) a particular individual was covered by the issuer; (2) the issuer identification number submitted with the claim is correct; (3) the individual was insured on the date the health care service was provided; (4) the service was provided during a waiting period or affiliation period before coverage was available; and (5) coverage may have ended prior to the date of service. The issuer's information system would also determine the limitations of coverage (e.g. high or low option coverage, with or without specific riders). The remaining information of the certification form could also be available to the issuer, especially for COBRA-eligible individuals: whether COBRA continuation coverage is involved (given that the premium is charged directly to the individual at a specified rate); the beginning and ending dates of coverage and waiting periods; and the name, address, phone number and contact person (or Department) for information.

Respondents may need to modify their systems to determine whether, for a given insurer's coverage of a particular individual, there was a 63-day period of interrupted coverage for purposes of specifying this information on a certification form. As noted above, the Departments have taken into consideration the difficulties insurers have in identifying dependents under family coverage, and the regulations make appropriate accommodations, in recognition of the need for a transition period during which information about dependent coverage information may be unavailable from issuers.

The cost of producing and issuing certifications (or notices in lieu of certifications where permitted) for private group plans is estimated to be $57 million for 53 million certifications in 1997, $64 million for 44 million in 1998, and $66 million for 44 million in each subsequent year. Medicaid programs would provide 10 million certifications annually at an annual cost of $600,000. Medicare would issue

92,000 annually at a cost of $115,000. (Should HHS decide to allow the Medicare award and termination letters to suffice as certifications, then there would be no cost to the Medicare program for the HIPAA certification requirements.) By 1999, the annual cost and volume would total $500,000 and 200,000 for OPM, $2.9 million and 1.9 million for state plans, and $6.1 million and 4.1 million for local plans, and $4.7 million and 2.9 million for individual market issuers.

Relative to the cost implied by the statute alone, regulatory provisions directed at the certification process reduce private group plans' cost of compliance by a minimum of $41 million (or 42 percent) in 1997, $20 million (or 24 percent) in 1998, and $18 million (or 21 percent) in 1999 and later years, through the creation of transitional rules, safe harbors and good faith compliance periods. The regulation acts to reduce parallel burdens on issuers and state and local government group plans in similar proportion.

In another discretionary provision, these regulations require group plans to notify eligible new employees of their special enrollment rights. This provision is necessary to make sure employees are sufficiently informed to exercise their rights within the 30-day window provided in the statute. The cost of this disclosure is expected to be small, since it is a uniform disclosure that can accompany ordinary materials provided to new participants. In order to minimize the burden, the preamble to these regulations provides model language for the notice adequate for meeting the statutory obligation. The cost, which would reach $1.72 million in 1999 for private group plans, is described in the PRA analysis. In 1999, the cost for State plans would reach $167,000; the cost for local plans would reach $290,000.

The direct cost of certifications and notices contribute to the overall social cost of the statute and regulations.

HHS has exercised regulatory discretion regarding two specific provisions that will be enforced exclusively by HHS (also referred to as the ''non-shared group market'' provisions).

These two areas are as follows:

Guaranteed Availability of Coverage for Employers in the PHS Act Group Health Market Provisions

The group market provisions include rules relating to guaranteed availability of coverage for employers in the small group market that are only in the PHS Act (not in ERISA or the Code). Section 146.150 of the HHS regulations implements section 2711 of the PHS Act. In general, this section requires health insurance issuers that offer coverage in the small group market to offer all policy forms to any eligible small employer and to accept for enrollment every eligible individual without regard to health status. HHS has interpreted this guaranteed availability requirement to apply to all products offered in the small group market. Some States and issuers argue that the statute would permit guaranteed availability of an issuer's basic and standard plan, as opposed to all products offered by the issuer in the small group market. HHS does not agree with this interpretation and have proposed our interpretation in the regulation. Depending upon State law, this decision may provide the benefit of additional choices to small employers purchasing coverage in the small group market, while adding some potential costs for issuers offering coverage in the small group market.

Exclusion of Certain Plans From the PHS Act Group Market Requirements

The group market provisions also include rules under which certain plans are excluded from the group market provisions that are only in the PHS Act (not in ERISA or the Code). Section 146.180 of the HHS regulations implements section 2721 of the PHS Act. Section 146.180(b) includes rules pertaining to non-federal governmental plans, which are permitted under HIPAA to elect to be exempted from some or all of HIPAA's requirements in the PHS Act. HHS has exercised regulatory discretion by prescribing the form and manner of the election and the contents of the notice. HHS has also required a non-federal governmental plan making this election to notify plan participants, at the time of enrollment and on an annual basis, of the fact and consequences of the election. HHS has exercised this regulatory authority in order to ensure adequate documentation of a non-federal governmental plan's proper and appropriate election without placing an undue burden on the plan. In addition, HHS has provided a non-federal governmental plan the flexibility to elect to opt out of specific provisions of the statute and have allowed for this flexibility in the contents of the notice. The cost of providing these notices for non-federal governmental would range from $79,000 to $158,000 in 1997 and from $158,000 to $315,000 in 1999.

HHS has also exercised regulatory discretion in connection with individual market provisions by specifying that college health plans are treated as bona fide associations. Since, under HIPAA, coverage offered through a bona fide association is creditable coverage, individuals covered under a college plan would receive credit for this coverage. However, because this coverage is offered though a bona fide association (as defined in Part 144 of the group market rules), the issuer benefits because it does not have to make the coverage available in the individual market to eligible individuals, and does not have to renew coverage for a student who leaves the association. This regulatory provision is expected to minimally disrupt business practices for those college plans.

HHS also exercised regulatory discretion in connection with individual market provisions. When an eligible individual applies for coverage in the individual market, the effective date of such coverage is deemed, in the regulations, to be the date on which the individual applies for such coverage, and assuming the individual's application for coverage was accepted.

The impact of this regulatory provision is that an individual who wishes to maintain creditable coverage may delay, for up to 63 days, an application for coverage in the individual insurance market, especially if he or she is assured of being covered by an issuer (e.g., if the person is guaranteed issuance of an individual product as an individual coming from group coverage, under the Act's guaranteed availability provisions). The individual may forego medical treatment during the 63-day period of non-coverage, resulting in a deterioration of health on entering the new health plan, with a potential for greater costs incurred by the insurer or health plan.

The regulation could have required that the individual apply for coverage within a reasonable time period in advance of the 63-day period, such as 30 days after the end of prior coverage (which is similar to the statutory requirement for a request for enrollment in a group health plan following exhaustion of COBRA coverage or other exhaustion of coverage); or, the insurer could have been required to begin coverage within some specified time period after application. However, the approach taken in the regulation is consistent with statutory provisions regarding the treatment of waiting periods or HMO affiliation periods, which the statute specifically excludes from being considered breaks in coverage. The regulatory provision also accords the same status to all individuals in any circumstance by making a 63-day period the maximum during which an individual can be

without coverage and still receive credit for creditable coverage.

M. Paperwork Reduction Act—Department of Labor and Department of the Treasury

The Department of Labor and the Department of the Treasury have submitted this emergency processing public information collection request (ICR), consisting of three distinct ICRs, to the OBM for review and clearance under the Paperwork Reduction Act of 1995 (Pub. L. 104–13, 44 U.S.C. Chapter 35). The Departments have asked for OMB clearance as soon as possible, and OMB approval is anticipated by or before June, 1, 1997.

These regulations contain three distinct ICRs. Two of them (Establishing Prior Creditable Coverage and Notice of Enrollment Rights) are prescribed by the statute.

The first ICR implements statutorily prescribed requirements necessary to establish prior creditable coverage. This is accomplished primarily through the issuance of certificates of prior coverage by group health plans or by service providers that the group health plans contract with in order to provide these documents. In addition, this ICR permits the use of a notice that may be used by the plans to meet their obligations in connection with periods of coverage ending during the transition period, October 1, 1996 through May 31, 1997, saving the respondents both hours and cost during that period. This ICR also covers the requests that certain plans will make regarding additional information they require because they are using the Alternative Method of Crediting Coverage. Finally, this ICR also includes the occasional circumstances where a participant is unable to secure a certificate and needs to provide some supplemental form of documentation in order to establish prior creditable coverage.

The second ICR, Notice of Special Enrollment Rights, implements the statutorily prescribed disclosure obligation of the plans to inform a participant, at the time of enrollment, of the plan's special enrollment rules.

The third ICR, Notice of Pre-Existing Condition Exclusion, concerns the disclosure requirements on those plans that contain pre-existing condition exclusion provisions. This ICR has two components: a notice to all participants at the time of enrollment stating the terms of the plan's pre-exisiting condition provisions, the participant's right to demonstrate creditable coverage, and that the plan or issuer will assist in securing a certificate if necessary; and notice by the plan of its determination that an exclusion period applies to an individual.

1. Establishing Prior Creditable Coverage

i. Department of Labor

The Department of Labor, as part of its continuing effort to reduce paperwork and respondent burden, conducts a preclearance consultation program to provide the general public and federal agencies with an opportunity to comment on proposed information collection requests (ICR) in accordance with the Paperwork Reduction Act of 1995 (PRA 95) (Pub. L. 104–13, 44 U.S.C. chapter 35) and 5 CFR 1320.11. This program helps to ensure that requested data can be provided in the desired format, reporting burden (time and financial resources) is minimized, collection instruments are clearly understood, and the impact of collection requirements on respondents can be properly assessed. Currently, the Pension and Welfare Benefits Administration is soliciting comments concerning the proposed new collection of Establishing Prior Creditable Coverage.

Dates: Written comments must be submitted to the office listed in the addressee section below on or before May 31, 1997. In light of the request for OMB clearance by June 1, 1997, submission of comments within the first 30 days is encouraged to ensure their consideration.

The Department of Labor is particularly interested in comments which:

- evaluate whether the proposed collection is necessary for the proper performance of the functions of the agency, including whether the information will have practical utility;
- evaluate the accuracy of the agency's estimate of the burden of the proposed collection of information, including the validity of the methodology and assumptions used;
- enhance the quality, utility, and clarity of the information to be collected; and
- minimize the burden of the collection of information on those who are to respond, including through the use of appropriate automated, electronic, mechanical, or other technological collection techniques or other forms of information technology, e.g., permitting electronic submissions of responses.

Addressee: Gerald B. Lindrew, Office of Policy and Research, U.S. Department of Labor, Pension and Welfare Benefits Administration, 200 Constitution Avenue, Room N–5647, Washington, DC 20210. Telephone: 202–219–4782 (this is not a toll-free number). Fax: 202–219–4745.

ii. Department of the Treasury

The collection of information is in Section 54.9801–5T. This information is required by the statute so that participants will be informed about their rights under HIPAA and about the amount of creditable coverage that they have accrued under a group health plan. The likely respondents are business or other for-profit institutions, non-profit institutions, small businesses or organizations, and Taft-Hartley trusts. Responses to this collection of information are mandatory.

Books or records relating to a collection of information must be retained as long as their contents may be come material in the administration of any internal revenue law. Generally, tax returns and tax return information are confidential, as required by 26 U.S.C. 6103.

Comments on the collection of information should be sent to the Office of Management and Budget, Attn: Desk Officer for the Department of the Treasury, Office of Information and Regulatory Affairs, Washington, DC 20503, with copies to the Internal Revenue Service, Attn: IRS Reports Clearance Officer, T:FP, Washington, DC 20224. Comments on the collection of information should be received by May 31, 1997. In light of the request for OMB clearance by June 1, 1997, submission of comments within the first 30 days is encouraged to ensure their consideration. Comments are specifically requested concerning:

Whether the proposed collection of information is necessary for the proper performance of the functions of the Internal Revenue Service, including whether the information will have practical utility;

The accuracy of the estimated burden associated with the proposed collection of information;

How to enhance the quality, utility, and clarity of the information to be collected;

How to minimize the burden of complying with the proposed collection of information, including the application of automated collection techniques or other forms of information technology; and

Estimates of capital or start up costs and costs of operation, maintenance, and purchase of services to provide information.

Additonal PRA 95 Information:

I. *Background:* In order to meet HIPAA's goal of improving access to and portability of health care benefits,

the statute provides that, after the submission of evidence establishing prior creditable coverage, a subsequent health insurance provider would be limited in the extent to which it could use pre-existing condition exclusions to limit coverage. This ICR covers the submission of materials sufficient to establish prior creditable coverage.

II. *Current Actions:* Under 29 CFR 2590.701–5 and 26 CFR 54.9801–5T of the interim rule, a group health plan offering group health insurance coverage is obligated to provide a written certificate of information suitable for establishing the prior creditable coverage of a participant or beneficiary. To the extent that a certification is not available or inadequate to prove prior creditable coverage, paragraph (c) provides other methods for establishing creditable coverage. During the transition period for certification (29 CFR 2590.710(e) and 26 CFR 54.9806–1T(e)), plans have the option of providing notices regarding participant's rights to certification rather than the certification itself; plans then provide certificates only to those participants who request them. 29 CFR 2590.701–5(a)(7) and 26 CFR 54.9801–5T(a)(7) provides special rules for establishing prior coverage of defendants, and 29 CFR 2590.701–5(b) and 26 CFR 54.9801–5T(b) provides guidance on providing evidence of coverage to those plans that use the alternative method of crediting coverage.

These regulations offer model certification and notice forms to be used by group health plans and health insurance issuers, containing the minimum information mandated by the statute. Based on past experience, the staff believes that most of the materials required to be exchanged under the certification procedure will be prepared by contract service providers such as insurance companies and third-party administrators.

Type of Review: New

Agencies: U.S. Department of Labor, Pension and Welfare Benefits Administration; U.S. Department of the Treasury, Internal Revenue Service.

Title: Establishing Prior Creditable Coverage

Affected Public: Individuals or households; Business or other for-profit; Not-for-profit institutions; Group Health Plans.

Frequency: On occasion

Burden:

Year	Total respondents	Total responses	Average time per response (range) (minutes)	Burden hours (range)	Cost (range)
1997	2,600,000	51,799,410	3.23	502,080	$57,180,000
			6.12	950,710	84,590,000
1998	2,600,000	44,431,970	5.04	672,120	64,480,000
			11.77	1,569,390	119,310,000
1999	2,600,000	44,399,150	5.27	702,360	66,310,000
			12.01	1,599,630	121,140,000
Totals					

Start up costs: It is estimated that the 15,604 plans that will perform these functions internally (rather than use a service provider) will incur an average cost of $5,000 per plan to revise their automated records systems to accommodate this information for a total cost of $78 million over 10 years beginning in 1997.

Estimated total cost:

Comments submitted in response to this notice will be summarized and/or included in the request for Office of Management and Budget approval of the information collection request; they will also become a matter of public record.

2. Notice of Enrollment Rights

i. Department of Labor

The Department of Labor, as part of its continuing effort to reduce paperwork and respondent burden, conducts a preclearance consultation program to provide the general public and federal agencies with an opportunity to comment on proposed information collection requests (ICR) in accordance with the Paperwork Reduction Act of 1995 (PRA 95) (Pub. L. 104–13, 44 U.S.C. Chapter 35) and 5 CFR 1320.11. This program helps to ensure that requested data can be provided in the desired format, reporting burden (time and financial resources) is minimized, collection instruments are clearly understood, and the impact of collection requirements on respondents can be properly assessed. Currently, the Pension and Welfare Benefits Administration is soliciting comments concerning the proposed new collection of Notice of Enrollment Rights.

Dates: Written comments must be submitted to the office listed in the addressee section below on or before May 31, 1997. In light of the request for OMB clearance by June 1, 1997, submission of comments within the first 30 days is encouraged to ensure their consideration.

The Department of Labor is particularly interested in comments which:

- evaluate whether the proposed collection is necessary for the proper performance of the functions of the agency, including whether the information will have practical utility;
- evaluate the accuracy of the agency's estimate of the burden of the proposed collection of information, including the validity of the methodology and assumptions used;
- enhance the quality, utility, and clarity of the information to be collected; and
- minimize the burden of the collection of information on those who are to respond, including through the use of appropriate automated, electronic, mechanical, or other technological collection techniques or other forms of information technology, e.g., permitting electronic submissions of responses.

Addressee: Gerald B. Lindrew, Office of Policy and Research, U.S. Department of Labor, Pension and Welfare Benefits Administration, 200 Constitution Avenue, Room N–5647, Washington, D.C. 20210. Telephone: 202–219–4782 (this is not a toll-free number). Fax: 202–219–4745.

ii. Department of the Treasury

The collection of information is in Section 54.9801–6T. This information is required by the statute so that participants will be informed about their rights under HIPAA and about the amount of creditable coverage that they have accrued under a group health plan.

The likely respondents are business or other for-profit institutions, non-profit institutions, small businesses or organizations, and Taft-Hartly trusts. Responses to this collection of information are mandatory.

Books or records relating to a collection of information must be retained as long as their contents may become material in the administration of any internal revenue law. Generally, tax returns and tax return information are confidential, as required by 26 U.S.C. 6103.

Comments on the collection of information should be sent to the Office of Management and Budget, Attn: Desk Officer for the Department of the Treasury, Office of Information and Regulatory Affairs, Washington, DC 20503, with copies to the Internal Revenue Service, Attn: IRS Reports Clearance Officer, T:FP, Washington, DC 20224. Comments on the collection of information should be received by May 31, 1997. In light of the request for OMB clearance by June 1, 1997, submission of comments within the first 30 days is encouraged to ensure their consideration. Comments are specially requested concerning:

Whether the proposed collection of information is necessary for the proper performance of the functions of the Internal Revenue Service, including whether the information will have practical utility;

The accuracy of the estimated burden associated with the proposed collection of information;

How to enhance the quality, utility, and clarity of the information to be collected;

How to minimize the burden of complying with the proposed collection of information, including the application of automated collection techniques or other forms of information technology; and

Estimates of capital or start up costs and costs of operation, maintenance, and purchase of services to provide information.

Additional PRA 95 Information:

I. *Background:* In order to improve participants' understanding of their rights under an employer's welfare benefits plan, the statute provides that, a participant be provided with a description of a plan's special enrollment rules on or before the time when a participant is offered the opportunity to enroll in a group health plan.

II. *Current Actions:* Under 29 CFR 2590.701–6 and 26 CFR 54.9801–6T of the interim rule, a group health plan offering group health insurance coverage is obligated to provide a description of the plans' special enrollment rules. The special enrollment rules generally apply in circumstances when the participant initially declined to enroll in the plan, and subsequently would like to have coverage.

These regulations offer a model form to be used by group health plans and health insurance issuers, containing the minimum information mandated by the statute. Based on past experience, the staff believes that most of the materials required to be supplied under this ICR will be prepared by contract service providers such as insurance companies and third-party administrators.

Type of Review: New.

Agencies: U.S. Department of Labor, Pension and Welfare Benefits administration; U.S. Department of the Treasury, Internal Revenue Service.

Title: Notice of Enrollment Rights.

Affected Public: Individuals or households; Business or other for-profit; Not-for-profit institutions; Group Health Plans.

Frequency: On occasion.

Burden:

Year	Total respondents (000)	Total responses	Average time per response (minutes)	Burden hours	Cost
1997	2,600,000	499,080	.50	750	100,000
1998	2,600,000	7,622.010	.50	11,430	1,460,000
1999	2,000,000	8,959,380	.50	13,440	1,720,000
Totals					

3. Notice of Pre-Existing Condition Exclusion

i. Department of Labor

The Department of Labor, as part of its continuing effort to reduce paperwork and respondent burden, conducts a preclearance consultation program to provide the general public and federal agencies with an opportunity to comment on proposed information collection requests (ICR) in accordance with the Paperwork Reduction Act of 1995 (PRA 95) (Pub. L. 104–13, 44 U.S.C. Chapter 35) and 5 CFR 1320.11. This program helps to ensure that requested data can be provided in the desired format, reporting burden (time and financial resources) is minimized, collection instruments are clearly understood, and the impact of collection requirements on respondents can be properly assessed. Currently, the Pension and Welfare Benefits Administration is soliciting comments concerning the proposed new collection of Notice of Pre-Existing Condition Exclusion.

Dates: Written comments must be submitted to the office listed in the addressee section below on or before May 31, 1997. In light of the request for OMB clearance by June 1, 1997, submission of comments within the first 30 days is encouraged to ensure their consideration.

The Department of Labor is particularly interested in comments which:

- evaluate whether the proposed collection is necessary for the proper performance of the functions of the agency, including whether the information will have practical utility;
- evaluate the accuracy of the agency's estimate of the burden of the proposed collection of information, including the validity of the methodology and assumptions used;
- enhance, the quality, utility, and clarity of the information to be collected; and
- minimize the burden of the collection of information on those who are to respond, including through the use of appropriate automated, electronic, mechanical, or other technological collection techniques or other forms of information technology, e.g., permitting electronic submissions of responses.

Addressee: Gerald B. Lindrew, Office of Policy and Research, U.S. Department of Labor, Pension and Welfare Benefits Administration, 200 Constitution Avenue, Room N–5647, Washington, D.C. 20210. Telephone: 202–219–4782 (this is not a toll-free number) Fax: 202–219–4745.

ii. Department of the Treasury

The collection of information is in Sections 54.9801–3T, 54.9801–4T, and 54.9801–5T. This information is required by the statute so that participants will be informed about their rights under HIPAA and about the amount of creditable coverage that they have accrued under a group health plan. The likely respondents are business or other for-profit institutions, non-profit institutions, small businesses or organizations, and Taft-Hartley trusts. Responses to this collection of information are mandatory.

Books or records relating to a collection of information must be retained as long as their contents may become material in the administration of any internal revenue law. Generally, tax returns and tax return information are confidential, as required by 26 U.S.C. 6103.

Comments on the collection of information should be sent to the Office of Management and Budget, Attn: Desk Officer for the Department of the Treasury, Officer of Information and Regulatory Affairs, Washington, DC 20503, with copies to the Internal Revenue Service, Attn: IRS Reports Clearance Officer, T:FP, Washington, DC 20224. Comments on the collection of information should be received by May 31, 1997. In light of the request for OMB clearance by June 1, 1997, submission of comments within the first 30 days in encouraged to ensure their consideration. Comments are specifically requested concerning:

Whether the proposed collection of information is necessary for the proper performance of the functions of the Internal Revenue Service, including whether the information will have practical utility;

The accuracy of the estimated burden associated with the proposed collection of information;

How to enhance the quality, utility, and clarity of the information to be collected;

How to minimize the burden of complying with the proposed collection of information, including the application of automated collection techniques or other forms of information technology; and

Estimates of capital or start up costs and costs of operation, maintenance, and purchase of services to provide information.

Additional PRA 95 Information:

I. *Background:* In order to meet HIPAA's goal of improving portability of health care coverage, participants needs to understand their rights to show prior creditable coverage when entering a group health plan that contain pre-existing condition exclusion provisions. In addition, participants entering plans that use the alternative method of crediting coverage also need to be informed of the plan's provisions. Therefore, the Department has determined that plans that contain these provisions must disclose that fact to new participants, as well as inform individual participants of the extent to which a pre-existing condition exclusion applies to them.

II. *Current Actions:* 29 CFR 2590.701–3(c) and 26 CFR 54.9801–3T(c) requires that a group health plan or health insurance issuer offering group health insurance under the plan may not impose any pre-existing condition exclusions on a participant unless the participant has been notified in writing that the plan contains per-existing condition exclusions, that a participant has the right to demonstrate any period of prior creditable coverage, and that the plan or issuer will assist the participant in obtaining a certificate of prior coverage from any prior plan or issuer, if necessary. 29 CFR 2590.701–4(c)(4) and 26 CFR 54.9801–4T(c)(4) requires that plans that use the alternative method of crediting coverage disclose their method at the time of enrollment in the plan. No additional cost of preparing or distributing this information has been included in this analysis because plans would only pursue this option if it were, on net, less costly than the standard method.

In addition, 29 CFR 2590.701–5(d)(2) and 26 CFR 54.9801–5T(d)(2) requires that before a plan or issuer imposes a pre-existing condition exclusion on a particular participant, it must first disclose that determination in writing, including the basis for the decision, and an explanation of any appeal procedure established by the plan or issuer.

Type of Review: New.

Agencies: U.S. Department of Labor, Pension and Welfare Benefits Administration; U.S. Department of the Treasury, Internal Revenue Service.

Title: Notice of Pre-Existing Exclusion Provisions.

Afffected Public: Individuals or households; Business or other for-profit; Not-for-profit institutions; Group Health Plans.

Frequency: On occasion.

Burden:

Cite/reference	Total respondents	Total responses	Average time per responses (minutes)	Burden hours	Cost
Notice at time of enrollment:					
1997	1,261,450	500,800	0.70	2,470	$180,000
1998	1,261,450	7,626,880	0.54	16,300	1,700,000
1999	1,261,450	8,959,700	0.50	13,750	1,730,000
Notice of pre-existing condition causing lack of coverage:					
1997	1,261,450	57,900	2.27	1,800	100,000
1998	1,261,450	862,830	0.84	6,160	410,000
1999	1,261,450	1,008,810	0.52	1,830	210,000
Totals					

Estimated Total Burden Cost:

N. Paperwork Reduction Act—Department of Health and Human Services

Under the Paperwork Reduction Act of 1995, HHS is required to provide 60-day notice in the **Federal Register** and solicit public comment before a collection of information requirement is submitted to the Office of Management and Budget (OMB) for review and approval. In order to fairly evaluate whether an information collection should be approved by OMB, section 3506(c)(2)(A) of the Paperwork Reduction Act of 1995 requires that we solicit comment on the following issues:

- The need for the information collection and its usefulness in carrying out the proper functions of our agency.
- The accuracy of our estimate of the information collection burden.

• The quality, utility, and clarity of the information to be collected.

• Recommendations to minimize the information collection burden on the affected public, including automated collection techniques.

We are, however, requesting an emergency review of this notice. In compliance with the requirement of section 3506(c)(2)(A) of the Paperwork Reduction Act of 1995, we have submitted to the Office of Management and Budget (OMB) the following requirement for emergency review. We are requesting an emergency review because the collection of this information is needed before the expiration of the normal time limits under OMB's regulations at 5 CFR, Part 1320, to ensure compliance with section 111 of the HIPAA necessary to implement congressional intent with respect to guaranteeing availability of individual health insurance coverage to certain individuals with prior group coverage. We cannot reasonably comply with the normal clearance procedures because public harm is likely to result because eligible individuals will not receive the health insurance protections under the statute.

We are requesting that OMB provide a 30-day public comment period from the date of the publication, with OMB review and approval by June 1, 1997, and a 180-day approval. During this 180-day period, we will publish a separate **Federal Register** notice announcing the initiation of an extensive 60-day agency review and public comment period on these requirements. We will submit the requirements for OMB review and an extension of this emergency approval.

Type of Information Request: New collection.

Title of Information Collection: Information Requirements Referenced in HIPAA for Group Health Plans.

Form Number: HCFA–R–206.

Use: This regulation and related information collection requirements will ensure that group health plans provide individuals with documentation necessary to demonstrate prior creditable coverage, and that group health plans notify individuals of their special enrollment rights in the group health insurance market.

Frequency: On occasion.

Affected Public: State and local governments, Business or other for profit, not-for-profit institutions, individuals or households, Federal government.

Number of Respondents: 1,430.

Total Annual Responses: Due to the rolling effective dates in the statute, the number of annual responses is estimated to be 32.5 million in 1997, but will increase to 41 million in 1998 and 42.5 million in 1999.

Total Annual Hours Requested: 1.8 million to 3.6 million hours in 1997; 2.3 million to 5.8 million hours in 1998; and 2.6 million to 5.9 million hours in 1999.

Total Annual Costs: $36.8 million to $53.9 million in 1997; $42.4 million to $76.3 million in 1998; and $43.5 million to $77.3 million in 1999. 45 CFR §§ 146.120, 146.122, 146.150, 146.152, 146.160, and 146.180 of this document contain information collection requirements.

45 CFR 146.120 Certificates and Disclosure of Previous Coverage

Certificates and Disclosure of Prior Coverage. This section sets forth guidance regarding the certification and other disclosure of information requirements relating to prior creditable coverage of an individual. In general, the certificate must be provided in writing and must include the following information: (1) The date any waiting or affiliation period began, (2) the date coverage began, and (3) the date coverage ended (or indicate if coverage is continuing). The regulations also allow a plan or issuer in an appropriate case to simply state in the certificate that the individual has at least 18 months of creditable coverage that is not interrupted by a significant break and indicate the date coverage ended. In general, individuals have the right to receive a certificate automatically (an automatic certificate) when they lose coverage under a plan and when they have a right to elect COBRA continuation coverage.

We anticipate that approximately 1,400 issuers will be required to produce 30 million certifications per year based on the model certificate provided. Our estimate of issuers (1,400) includes commercial insurers and HMOs, but does not include some types of issuers, such as Preferred Provider Organizations (PPOs); however, these types of issuers are small in number. The time estimate includes the time required to gather the pertinent information, create a certificate, and mail the certificate to the plan participant. This time estimate is based on discussions with industry individuals. We believe that, as a routine business practice, the issuers' administrative staff have the necessary information readily available to generate the required certificates. In addition, we have determined that the majority of issuers have or will have the capability to automatically computer generate and disseminate the necessary certification when appropriate.

These estimates include the certificates required by issuers acting as service providers on behalf of group health plans and state and local government health plans. We anticipate that most, if not all, state and local government health plans will contract with an issuer to develop the certificate.

ESTIMATES FOR CERTIFICATIONS

Year	Total respondents	Total responses	Average time per response (range)	Burden hours (range)	Cost (range)
1997	1,400	32,698,845	3.32 min	1,809,119 hrs	$36,366,106
		6.34min	3,456,036 hrs	53,434,628.	
1998	1,400	28,072,131	5.19 min	2,242,866 hrs	40,928,939
			12.23 min	5,720,198 hrs	74,859,759
1999	1,400	28,055,984	5.37 min	2,510,461 hrs	42,124,907
			12.41 min	5,804,408 hrs	75,760,119

NOTE: The costs above include the costs associated with issuers acting as service providers for group health plans. The costs are also included in the Department of Labor's estimates.

Notice to all participants: Under this section, issuers are required to notify all participants at the time of enrollment stating the terms of the issuer's pre-existing condition exclusion provisions, the participant's right to demonstrate creditable coverage, and that the issuer will assist in securing a certificate if necessary.

We have estimated the burden associated with this information collection requirement to be the time required for issuers to develop standardized language outlining the existence and terms of any preexisting condition exclusion under the plan and the rights of individuals to demonstrate creditable coverage. In specific, we anticipate that issuers will be required to develop approximately 660,000 notices in 1997; 5.6 million notices in 1998; and 6.2 million notices in 1999. At 30 seconds for each notice, we estimate the total hour burden to be 4,400 hours in 1997; 30,000 hours in 1998; and 34,000 hours in 1999. The respective costs will be $49,000 in 1997; $330,000 in 1998; and $377,000 in 1999. These estimates and subsequent estimates are based on an hourly wage of $11 for issuers and $15 for State and local government employees. These estimates include the notices required by issuers on behalf of state and local government health plans, since we anticipate that most, if not all state and local government health plans will contract with an issuer to develop the notice. The estimates have been disaggregated below:

Year	Issuers	State health plans	Local health plans	Total notices
Total notices:				
1997	320,000	129,826	214,880	664,706
1998	4,878,200	259,653	429,761	5,567,614
1999	5,734,300	259,653	429,761	6,189,714
Total burden hours:				
1997	1,592	1,078	1,784	4,454
1998	24,293	2,155	3,567	30,015
1999	28,557	2,155	3,567	34,279

Notice to individual of period of preexisting condition exclusion. Within a reasonable time following the receipt of the certificate, information relating to the alternative method, or other evidence of coverage, a plan or issuer is required to make a determination regarding the length of any preexisting condition exclusion period that applies to the individual and notify the individual of its determination. Whether a determination and notification is made within a reasonable period of time will depend upon the relevant facts and circumstances including whether the application of the preexisting condition exclusion period would prevent access to urgent medical services. The individual need only be notified, however, if, after considering the evidence, a preexisting condition exclusion period will be imposed on the individual. The basis of the determination, including the source and substance of any information on which the plan or issuer relied, must be included in the notice. The plan's appeals procedures and the opportunity of the individual to present additional evidence must also be explained in the notification.

We estimate that issuers will be required to develop approximately 29,000 notices in 1997; 425,000 notices in 1998; and 498,000 notices in 1999. At 2 minutes for each notice, we estimate the total hour burden to be 960 hours in 1997; 14,000 hours in 1998; and 16,600 hours in 1999. We estimate the respective costs associated with these burdens to be $10,600 in 1997; $156,000 in 1998; and $183,000 in 1999. These estimates include the notices required by issuers on behalf of state and local government health plans, since we anticipate that most, if not all state and local government health plans will contract with an issuer to develop the notice. The estimates have been disaggregated below:

Year	Issuers	State health plans	Local health plans	Total notices
Total notices:				
1997	27,650	588	766	29,004
1998	422,136	1,176	1,531	425,143
1999	496,182	1,176	1,531	498,889
Total burden hours:				
1997	921	20	25	966
1998	14,057	40	51	14,148
1999	16,553	40	51	16,644

45 CFR 146.122 Special Enrollment Periods

This section in the regulation provides guidance regarding new enrollment rights that employees and dependents have under HIPAA. A health insurance issuer offering group health insurance coverage is required to provide a description of the special enrollment rights to anyone who declines coverage at the time of enrollment. The regulations provide a model of such a description containing the minimum information mandated by the statute.

The first burden associated with this requirement is the time required for health insurance issuers and state and local government health plans to incorporate the model notice into the plan's standard policy information. We estimate the burden to be 2 hours annually per issuer, for a total burden of 2,800 hours. The cost associated with this hour burden is estimated to be $30,800 annually.

The second burden associated with this requirement is the time required to disseminate the notice to new enrollees. We estimate that issuers will be required to develop approximately 1 million notices in 1997; 5.3 million notices in 1998; and 5.9 million notices in 1999. At 30 seconds for each notice, we estimate the total hour burden to be 8,300 hours in 1997; 43,000 hours in 1998; and 48,000 hours in 1999. We have estimated the costs associated with these hour burdens to be $91,000 in 1997; $469,000 in 1998; and $527,000 in

1999. These estimates include the notices required by issuers on behalf of state and local government health plans, since we anticipate that most, if not all state and local government health plans will contract with an issuer to develop the notice. The estimates have been disaggregated below:

Year	Issuers	State health plans	Local health plans	Total notices
Total notices:				
1997	245,508	287,938	500,750	1,034,196
1998	3,750,024	575,875	1,001,500	5,327,399
1999	4,407,828	575,875	1,001,500	5,985,203
Total burden hours:				
1997	1,964	2,304	4,006	8,273
1998	30,000	4,607	8,012	42,619
1999	35,263	4,607	8,012	47,881

45 CFR 146.150 Guaranteed Availability of Coverage for Employers in the PHS Act Group Market Provisions

This section allows a health insurance issuer to deny health insurance coverage in the small group market if the issuer has demonstrated to the applicable State authority (if required by the State authority) that it does not have the financial reserves necessary to underwrite additional coverage and that it is applying this denial uniformly to all employers in the small group market in the State consistent with applicable State law and without regard to the claims experience of those employers and their employees (and their dependents) or any health status-related factor relating to those employees and dependents. Thus, issuers are only required to report to the applicable State authority if they are discontinuing coverage in the small group market.

This requirement exists in the absence of this regulation because under current insurance practices, State insurance departments oversee discontinuance of insurance products in their State as a normal business practice. Therefore, these information collection requirements are exempt from the PRA under 5 CFR 1320.3(b)(2) and 5 CFR 1320.3(b)(3). However, under HIPAA, States must review policies during their oversight process to make sure there is a guaranteed availability clause in each policy. For the 37 States that currently require guaranteed availability, it is our understanding that this is normal business practice. For the other 18 States, however, we see this State burden to be about 10 minutes per policy, since States already review policies for other requirements and this process does not prescribe a timetable for reviewing the policies. We see this as a total burden of 10,850 hours. We have estimated the cost associated with this hour burden to be $163,000. If the State identifies a violation and a State has to take some action, we believe that each State will be required to initiate fewer than 10 administrative actions on an annual basis against specific individuals or entities who failed to implement the Federal guarantee availability requirements.

45 CFR 146.152 Guaranteed Renewability of Coverage for Employers in the PHS Act Group Market Provisions

In this section issuers are only required to report if they are discontinuing a particular type of coverage or discontinuing all coverage. This requirement exists in the absence of this regulation because under current insurance practices, State insurance departments oversee discontinuance of insurance products in their State as a normal business practice. Therefore, these information collection requirements are exempt from the PRA under 5 CFR 1320.3(b)(2) and 5 CFR 1320.3(b)(3). However, under HIPAA, States must review policies during their oversight process to make sure there is a guaranteed availability clause in each policy. For the 43 States that currently require guaranteed renewability, it is our understanding that this is normal business practice. For the other 12 States, however, we see this State burden to be about 10 minutes per policy, since States already review policies for other requirements and this process does not prescribe a timetable for reviewing the policies. We see this as a total burden of 6,700 hours. We have estimated the cost associated with this hour burden to be $100,500. If the State identifies a violation and a State has to take some action, we believe that each State will be required to initiate fewer than 10 administrative actions on an annual basis against specific individuals or entities who failed to implement the Federal guarantee renewability requirements.

45 CFR 146.160 Disclosure of Information by Issuers to Employers Seeking Coverage in the Small Group Market in the PHS Act Provisions

This section requires issuers to disclose information to employers seeking coverage in the small group market. This section requires information to be provided by a health insurance issuer offering any health insurance coverage to a small employer. This information includes the issuer's right to change premium rates and the factors that may affect changes in premium rates, renewability of coverage, any preexisting condition exclusion, any affiliation periods applied by HMOs, the geographic areas served by HMOs, and the benefits and premiums available under all health insurance coverage for which the employer is qualified. The issuer is exempted from disclosing information that is proprietary or trade secret information under applicable law.

The information described in this section must be language that is understandable by the average small employer and sufficient to reasonably inform small employers of their rights and obligations under the health insurance coverage. This requirement is satisfied if the issuer provides an outline of coverage, the minimum contribution and group participation rules that apply to any particular type of coverage, and any other information required by the State. An outline of coverage is defined as a general description of benefits and premiums. This would include an outline of coverage similar to the manner in which Medigap policies are presented, allowing the employer to easily compare one policy form to another to determine what is covered and how much the coverage will cost.

We have estimated the total burden associated with this activity to be 2,400 hours. We anticipate that 1,200 issuers will be required to provide disclosure to small employers on an annual basis. We

estimate this time to be approximately 2 hours for each issuer to develop and update the standard information related to the general description of benefits and premiums on an annual basis and include this information in their policy information. We have estimated the cost associated with this hour burden to be $36,000.

45 CFR 146.180 Exclusion of Certain Plans From the PHS Act Group Market Requirements

Section 145.180(b) includes rules pertaining to nonfederal governmental plans, which are permitted under HIPAA to elect to be exempted from some or all of HIPAA's requirements in the PHS Act. The regulation establishes the form and manner of the election. In particular, a nonfederal governmental plan making this election is required to notify plan participants, at the time of enrollment and on an annual basis, of the fact and consequences of the election. The burden imposed by this is the requirement for plans to disseminate standard notification language describing the plans' election and the consequences of this election. We anticipate that between 3,500 and 5,000 nonfederal governmental plans will make this election and will therefore be required to disseminate notifications to their participants on an annual basis. Since this is standard language that will be incorporated into plans' existing policy documents, we see the burden as approximately 2 hours per plan to develop and update this standardized disclosure statement on an annual basis. Thus, we estimate the total burden for this activity to range from 7,000 to 10,000 hours. We estimate the cost associated with these hourly burdens to range from $77,000 to $110,000 per year.

The above estimate does not include the cost of disseminating the notices to all plan participants on an annual basis and to new enrollees at the time of enrollment. Although we do not have an accurate estimate of the number of nonfederal governmental plans will choose to opt out of these provisions, we have provided for a range of 50 to 100 percent. Using these ranges, we estimated 400,000 to 800,000 of these notices would need to be produced in 1997 and 800,000 to 1.6 million in 1998 and 1999. At 30 seconds per notice, we estimate the total burden hours to range from 3,400 to 6,800 in 1997; and 6,800 to 13,600 in 1998 and 1999. We have estimated the costs associated with these hour burdens to range from $37,400 to $74,800 in 1997; and from $74,800 to $149,600 in 1998 and 1999.

We have submitted a copy of this rule to OMB for its review of these information collections. A notice will be published in the **Federal Register** when approval is obtained. Interested persons are invited to send comments regarding this burden or any other aspect of these collections of information. If you comment on these information collection and record keeping requirements, please mail copies directly to the following addresses:

Health Care Financing Administration, Office of Financial and Human Resources, Management Planning and Analysis Staff, Room C2–26–17, 7500 Security Boulevard, Baltimore, MD 21244–1850. Attn: John Burke

Office of Information and Regulatory Affairs, Office of Management and Budget, Room 10235, New Executive Office Building, Washington, DC 20503, Attn: Allison Herron Eydt, HCFA Desk Officer.

Statutory Authorities

The Department of Labor interim final rule is adopted pursuant to the authority contained in Section 707 of ERISA (Pub. L. 93–406, 88 Stat. 894; 29 U.S.C. 1135) as amended by HIPAA, (Pub. L. 104–91; 101 Stat. 1936; 29 U.S.C. 1181).

The Department of Health and Human Services interim final rule is adopted pursuant to the authority contained in Sections 2701, 2702, 2711, 2712, 2713, and 2792 of the PHS Act, as established by HIPAA, (Pub. L. 104–191, 42 U.S.C. 300gg–1 through 300gg–13, and 300gg–92).

The Department of the Treasury temporary rule is adopted pursuant to the authority contained in Section.

List of Subjects

26 CFR Part 54

Excise taxes, Health insurance, Pensions, Reporting and recordkeeping requirements.

29 CFR Part 2590

Employee benefit plans, Employee Retirement Income Security Act, Health care, Health insurance, Reporting and recordkeeping requirements.

45 CFR Parts 144 and 146

Health care, Health insurance, Reporting and recordkeeping requirements, State regulation of health insurance.

Amendments to the Regulations

Internal Revenue Service

26 CFR Chapter 1

Accordingly, 26 CFR part 54 is amended as follows:

PART 54—PENSION EXCISE TAXES

Paragraph 1. The authority citation for part 54 is amended by adding entries in numerical order to read as follows:

Authority: 26 U.S.C. 7805 * * *

Section 54.9801–1T also issued under 26 U.S.C. 9806.

Section 54.9801–2T also issued under 26 U.S.C. 9806.

Section 54.9801–3T also issued under 26 U.S.C. 9806.

Section 54.9801–4T also issued under 26 U.S.C. 9806.

Section 54.9801–5T also issued under 26 U.S.C. 9801(c)(4), 9801(e)(3), and 9806

Section 54.9801–6T also issued under 26 U.S.C. 9806.

Section 54.9802–1T also issued under 26 U.S.C. 9806.

Section 54.9804–1T also issued under 26 U.S.C. 9806.

Section 54.9806–1T also issued under 26 U.S.C. 9806.

Par. 2. Sections 54.9801–1T, 54.9801–2T, 54.9801–3T, 54.9801–4T, 54.9801–5T, 54.9801–6T, 54.9802–1T, 54.9804–1T, and 54.9806–1T are added to read as follows:

§ 54.9801–1T Basis and scope (temporary).

(a) *Statutory basis.* Sections 54.9801–1T through 54.9801–6T, 54.9802–1T, 54.9804–1T, and 54.9806–1T (portability sections) implement Chapter 100 of Subtitle K of the Internal Revenue Code of 1986.

(b) *Scope.* A group health plan may provide greater rights to participants and beneficiaries than those set forth in these portability sections. These portability sections set forth minimum requirements for group health plans concerning:

(1) Limitations on a preexisting condition exclusion period.

(2) Certificates and disclosure of previous coverage.

(3) Rules relating to creditable coverage.

(4) Special enrollment periods.

(c) *Similar Requirements Under the Public Health Service Act and Employee Retirement Income Security Act.* Sections 2701, 2702, 2721, and 2791 of the Public Health Service Act and sections 701, 702, 703, 705, and 706 of the Employee Retirement Income Security Act of 1974 impose requirements similar to those imposed under Chapter 100 of Subtitle K of the Code with respect to health insurance issuers offering group health insurance coverage. See 45 CFR parts 144, 146 and 148 and 29 CFR part 2590. See also Part B of Title XXVII of the Public Health Service Act and 45 CFR part 148 for other rules applicable to health insurance offered in the individual market (defined in § 54.9801–2T).

§ 54.9801–2T Definitions (temporary).

Unless otherwise provided, the definitions in this section govern in applying the provisions of §§ 54.9801–1T through 54.9801–6T, 54.9802–1T, 54.9804–1T, and 54.9806–1T.

Affiliation period means a period of time that must expire before health insurance coverage provided by an HMO becomes effective, and during which the HMO is not required to provide benefits.

COBRA definitions:

(1) *COBRA* means Title X of the Consolidated Omnibus Budget Reconciliation Act of 1985, as amended.

(2) *COBRA continuation coverage* means coverage, under a group health plan, that satisfies an applicable COBRA continuation provision.

(3) *COBRA continuation provision* means sections 601–608 of the ERISA, section 4980B of the Code (other than paragraph (f)(1) of such section 4980B insofar as it relates to pediatric vaccines), and Title XXII of the PHSA.

(4) *Exhaustion of COBRA continuation coverage* means that an individual's COBRA continuation coverage ceases for any reason other than either failure of the individual to pay premiums on a timely basis, or for cause (such as making a fraudulent claim or an intentional misrepresentation of a material fact in connection with the plan). An individual is considered to have exhausted COBRA continuation coverage if such coverage ceases—

(i) Due to the failure of the employer or other responsible entity to remit premiums on a timely basis; or

(ii) When the individual no longer resides, lives, or works in a service area of an HMO or similar program (whether or not within the choice of the individual) and there is no other COBRA continuation coverage available to the individual.

Condition means a medical condition.

Creditable coverage means *creditable coverage* within the meaning of § 54.9801–4T(a).

Employee Retirement Income Security Act of 1974 (ERISA) means the Employee Retirement Income Security Act of 1974, as amended (29 U.S.C. 1001 *et seq.*).

Enroll means to become covered for benefits under a group health plan (i.e., when coverage becomes effective), without regard to when the individual may have completed or filed any forms that are required in order to enroll in the plan. For this purpose, an individual who has health insurance coverage under a group health plan is enrolled in the plan regardless of whether the individual elects coverage, the individual is a dependent who becomes covered as a result of an election by a participant, or the individual becomes covered without an election.

Enrollment date definitions (enrollment date and *first day of coverage)* are set forth in § 54.9801–3T(a)(2) (i) and (ii).

Excepted benefits means the benefits described as excepted in § 54.9804–1T(b).

Genetic information means information about genes, gene products, and inherited characteristics that may derive from the individual or a family member. This includes information regarding carrier status and information derived from laboratory tests that identify mutations in specific genes or chromosomes, physical medical examinations, family histories, and direct analysis of genes or chromosomes.

Group health insurance coverage means health insurance coverage offered in connection with a group health plan.

Group health plan means a plan (including a self-insured plan) of, or contributed to by, an employer (including a self-employed person) or employee organization to provide health care (directly or otherwise) to the employees, former employees, the employer, others associated or formerly associated with the employer in a business relationship, or their families.

Group market means the market for health insurance coverage offered in connection with a group health plan. (However, certain very small plans may be treated as being in the individual market, rather than the group market; see the definition of *individual market* in this section.)

Health insurance coverage means benefits consisting of medical care (provided directly, through insurance or reimbursement, or otherwise) under any hospital or medical service policy or certificate, hospital or medical service plan contract, or HMO contract offered by a health insurance issuer. However, benefits described in § 54.9804–1T(b)(2) are not treated as benefits consisting of medical care.

Health insurance issuer or *issuer* means an insurance company, insurance service, or insurance organization (including an HMO) that is required to be licensed to engage in the business of insurance in a State and that is subject to State law that regulates insurance (within the meaning of section 514(b)(2) of ERISA). Such term does not include a group health plan.

Health maintenance organization or *HMO* means—

(1) A federally qualified health maintenance organization (as defined in section 1301(a) of the PHSA);

(2) An organization recognized under State law as a health maintenance organization; or

(3) A similar organization regulated under State law for solvency in the same manner and to the same extent as such a health maintenance organization.

Individual health insurance coverage means health insurance coverage offered to individuals in the individual market, but does not include short-term, limited duration insurance. For this purpose, short-term, limited duration insurance means health insurance coverage provided pursuant to a contract with an issuer that has an expiration date specified in the contract (taking into account any extensions that may be elected by the policyholder without the issuer's consent) that is within 12 months of the date such contract becomes effective. Individual health insurance coverage can include dependent coverage.

Individual market means the market for health insurance coverage offered to individuals other than in connection with a group health plan. Unless a State elects otherwise in accordance with section 2791(e)(1)(B)(ii) of the PHSA, such term also includes coverage offered in connection with a group health plan that has fewer than two participants as current employees on the first day of the plan year.

Issuer means a health insurance issuer.

Late enrollment definitions (late enrollee and *late enrollment*) are set forth in § 54.9801–3T(a)(2) (iii) and (iv).

Medical care has the meaning given such term by section 213(d) of the Internal Revenue Code, determined without regard to section 213(d)(1)(C) and so much of section 213(d)(1)(D) as relates to qualified long-term care insurance.

Medical condition on *condition* means any condition, whether physical or mental, including, but not limited to, any condition resulting from illness, injury (whether or not the injury is accidental), pregnancy, or congenital malformation. However, genetic information is not a condition.

Placement, or being placed, for adoption means the assumption and retention of a legal obligation for total or partial support of a child by a person with whom the child has been placed in anticipation of the child's adoption. The child's placement for adoption with such person terminates upon the termination of such legal obligation.

Plan year means the year that is designated as the plan year in the plan

document of a group health plan, except that if the plan document does not designate a plan year or if there is no plan document, the plan year is—

(1) The deductible/limit year used under the plan;

(2) If the plan does not impose deductibles or limits on a yearly basis, then the plan year is the policy year;

(3) If the plan does not impose deductibles or limits on a yearly basis, and either the plan is not insured or the insurance policy is not renewed on an annual basis, then the plan year is the employer's taxable year; or

(4) In any other case, the plan year is the calendar year.

Preexisting condition exclusion means a limitation or exclusion of benefits relating to a condition based on the fact that the condition was present before the first day of coverage, whether or not any medical advice, diagnosis, care, or treatment was recommended or received before that day. A preexisting condition exclusion includes any exclusion applicable to an individual as a result of information that is obtained relating to an individual's health status before the individual's first day of coverage, such as a condition identified as a result of a pre-enrollment questionnaire or physical examination given to the individual, or review of medical records relating to the preenrollment period.

Public health plan means *public health plan* within the meaning of § 54.9801–4T(a)(1)(ix).

Public Health Service Act (PHSA) means the Public Health Service Act (42 U.S.C. 201, *et seq.*).

Significant break in coverage means a *significant break in coverage* within the meaning of § 54.9801–4T(b)(2)(iii).

Special enrollment date means a *special enrollment date* within the meaning of § 54.9801–6T(d).

State health benefits risk pool means a *State health benefits risk pool* within the meaning of § 54.9801–4T(a)(1)(vii).

Waiting period means the period that must pass before an employee or dependent is eligible to enroll under the terms of a group health plan. If an employee or dependent enrolls as a late enrollee or on a special enrollment date, any period before such late or special enrollment is not a waiting period. If an individual seeks and obtains coverage in the individual market, any period after the date the individual files a substantially complete application for coverage and before the first day of coverage is a waiting period.

§ 54.9801–3T Limitations on preexisting condition exclusion period (temporary).

(a) *Preexisting condition exclusion*—(1) *In general.* Subject to paragraph (b) of this section, a group health plan may impose, with respect to a participant or beneficiary, a preexisting condition exclusion only if the requirements of this paragraph (a) are satisfied. (See PHSA section 2701 and ERISA section 701 under which this prohibition is also imposed on a health insurance issuer offering group health insurance coverage.)

(i) *6-month look-back rule.* A preexisting condition exclusion must relate to a condition (whether physical or mental), regardless of the cause of the condition, for which medical advice, diagnosis, care, or treatment was recommended or received within the 6-month period ending on the enrollment date.

(A) For purposes of this paragraph (a)(1)(i), medical advice, diagnosis, care, or treatment is taken into account only if it is recommended by, or received from, an individual licensed or similarly authorized to provide such services under State law and operating within the scope of practice authorized by State law.

(B) For purposes of this paragraph (a)(1)(i), the 6-month period ending on the enrollment date begins on the 6-month anniversary date preceding the enrollment date. For example, for an enrollment date of August 1, 1998, the 6-month period preceding the enrollment date is the period commencing on February 1, 1998 and continuing through July 31, 1998. As another example, for an enrollment date of August 30, 1998, the 6-month period preceding the enrollment date is the period commencing on February 28, 1998 and continuing through August 29, 1998.

(C) The rules of this paragraph (a)(1)(i) are illustrated by the following examples:

Example 1. (i) Individual *A* is treated for a medical condition 7 months before the enrollment date in Employer *R*'s group health plan. As part of such treatment, *A*'s physician recommends that a follow-up examination be given 2 months later. Despite this recommendation, *A* does not receive a follow-up examination and no other medical advice, diagnosis, care, or treatment for that condition is recommended to *A* or received by *A* during the 6-month period ending on *A*'s enrollment date in Employer *R*'s plan.

(ii) In this *Example 1,* Employer *R*'s plan may not impose a preexisting condition exclusion period with respect to the condition for which *A* received treatment 7 months prior to the enrollment date.

Example 2. (i) Same facts as *Example 1* except that Employer *R's* plan learns of the condition and attaches a rider to *A*'s policy excluding coverage for the condition. Three months after enrollment, *A*'s condition recurs, and Employer *R*'s plan denies payment under the rider.

(ii) In this *Example 2,* the rider is a preexisting condition exclusion and Employer *R*'s plan may not impose a preexisting condition exclusion with respect to the condition for which *A* received treatment 7 months prior to the enrollment date.

Example 3. (i) Individual *B* has asthma and is treated for that condition several times during the 6-month period before *B*'s enrollment date in Employer *S*'s plan. The plan imposes a 12-month preexisting condition exclusion. *B* has no prior creditable coverage to reduce the exclusion period. Three months after the enrollment date, *B* begins coverage under Employer *S*'s plan. Two months later, *B* is hospitalized for asthma.

(ii) In this *Example 3,* Employer *S*'s plan may exclude payment for the hospital stay and the physician services associated with this illness because the care is related to a medical condition for which treatment was received by *B* during the 6-month period before the enrollment date.

Example 4. (i) Individual *D,* who is subject to a preexisting condition exclusion imposed by Employer *U*'s plan, has diabetes, as well as a foot condition caused by poor circulation and retinal degeneration (both of which are conditions that may be directly attributed to diabetes). After enrolling in the plan, *D* stumbles and breaks a leg.

(ii) In this *Example 4,* the leg fracture is not a condition related to *D*'s diabetes, even though poor circulation in *D*'s extremities and poor vision may have contributed towards the accident. However, any additional medical services that may be needed because of *D*'s preexisting diabetic condition that would not be needed by another patient with a broken leg who does not have diabetes may be subject to the preexisting condition exclusion imposed under Employer *U*'s plan.

(ii) *Maximum length of preexisting condition exclusion (the look-forward rule).* A preexisting condition exclusion is not permitted to extend for more than 12 months (18 months in the case of a late enrollee) after the enrollment date. For purposes of this paragraph (a)(1)(ii), the 12-month and 18-month periods after the enrollment date are determined by reference to the anniversary of the enrollment date. For example, for an enrollment date of August 1, 1998, the 12-month period after the enrollment date is the period commencing on August 1, 1998 and continuing through July 31, 1999.

(iii) *Reducing a preexisting condition exclusion period by creditable coverage.* The period of any preexisting condition exclusion that would otherwise apply to an individual under a group health plan is reduced by the number of days of creditable coverage the individual has as of the enrollment date, as counted under § 54.9801–4T. For purposes of § 54.9801–1T through § 54.9801–6T, the phrase ''days of creditable coverage'' has the same meaning as the phrase

''aggregate of the periods of creditable coverage'' as such term is used in section 9801(a)(3) of the Internal Revenue Code.

(iv) *Other standards.* See § 54.9802–1T for other standards that may apply with respect to certain benefit limitations or restrictions under a group health plan.

(2) *Enrollment definitions*—(i) *Enrollment date* means the first day of coverage or, if there is a waiting period, the first day of the waiting period.

(ii)(A) *First day of coverage* means, in the case of an individual covered for benefits under a group health plan in the group market, the first day of coverage under the plan and, in the case of an individual covered by health insurance coverage in the individual market, the first day of coverage under the policy.

(B) The following example illustrates the rule of paragraph (a)(2)(ii)(A) of this section:

Example. (i) Employer *V*'s group health plan provides for coverage to begin on the first day of the first payroll period following the date an employee is hired and completes the applicable enrollment forms, or on any subsequent January 1 after completion of the applicable enrollment forms. Employer *V*'s plan imposes a preexisting condition exclusion for 12 months (reduced by the individual's creditable coverage) following an individual's enrollment date. Employee *E* is hired by Employer *V* on October 13, 1998 and then on October 14, 1998 completes and files all the forms necessary to enroll in the plan. *E*'s coverage under the plan becomes effective on October 25, 1998 (which is the beginning of the first payroll period after *E*'s date of hire).

(ii) In this *Example, E*'s enrollment date is October 13, 1998 (which is the first day of the waiting period for *E*'s enrollment and is also *E*'s date of hire). Accordingly, with respect to *E,* the 6-month period in paragraph (a)(1)(i) would be the period from April 13, 1998 through October 12, 1998, the maximum permissible period during which Employer *V*'s plan could apply a preexisting condition exclusion under paragraph (a)(1)(ii) would be the period from October 13, 1998 through October 12, 1999, and this period would be reduced under paragraph (a)(1)(iii) by *E*'s days of creditable coverage as of October 13, 1998.

(iii) *Late enrollee* means an individual whose enrollment in a plan is a late enrollment.

(iv) (A) *Late enrollment* means enrollment under a group health plan other than on—

(*1*) The earliest date on which coverage can become effective under the terms of the plan; or

(*2*) A special enrollment date for the individual.

(B) If an individual ceases to be eligible for coverage under the plan by terminating employment, and then subsequently becomes eligible for coverage under the plan by resuming employment, only eligibility during the individual's most recent period of employment is taken into account in determining whether the individual is a late enrollee under the plan with respect to the most recent period of coverage. Similar rules apply if an individual again becomes eligible for coverage following a suspension of coverage that applied generally under the plan.

(v) *Examples.* The rules of this paragraph (a)(2) are illustrated by the following examples:

Example 1. (i) Employee *F* first becomes eligible to be covered by Employer *W*'s group health plan on January 1, 1999, but elects not to enroll in the plan until April 1, 1999. April 1, 1999 is not a special enrollment date for *F.*

(ii) In this *Example 1, F* would be a late enrollee with respect to *F*'s coverage that became effective under the plan on April 1, 1999.

Example 2. (i) Same as *Example 1,* except that *F* does not enroll in the plan on April 1, 1999 and terminates employment with Employer *W* on July 1, 1999, without having had any health insurance coverage under the plan. *F* is rehired by Employer *W* on January 1, 2000 and is eligible for and elects coverage under Employer *W*'s plan effective on January 1, 2000.

(ii) In this *Example 2, F* would not be a late enrollee with respect to *F*'s coverage that became effective on January 1, 2000.

(b) *Exceptions pertaining to preexisting condition exclusions*—(1) *Newborns*—

(i) *In general.* Subject to paragraph (b)(3) of this section, a group health plan may not impose any preexisting condition exclusion with regard to a child who, as of the last day of the 30-day period beginning with the date of birth, is covered under any creditable coverage. Accordingly, if a newborn is enrolled in a group health plan (or other creditable coverage) within 30 days after birth and subsequently enrolls in another group health plan without a significant break in coverage, the other plan may not impose any preexisting condition exclusion with regard to the child.

(ii) *Example.* The rule of this paragraph (b)(1) is illustrated by the following example:

Example. (i) Seven months after enrollment in Employer *W*'s group health plan, Individual *E* has a child born with a birth defect. Because the child is enrolled in Employer *W*'s plan with in 30 days of birth, no preexisting condition exclusion may be imposed with respect to the child under Employer *W*'s plan. Three months after the child's birth, *E* commences employment with Employer *X* and enrolls with the child in Employer *X*'s plan 45 days after leaving Employer *W*'s plan. Employer *X*'s plan imposes a 12-month exclusion for any preexisting condition.

(ii) In this *Example,* Employer *X*'s plan may not impose any preexisting condition exclusion with respect to *E*'s child because the child was covered within 30 days of birth and had no significant break in coverage. This result applies regardless of whether *E*'s child is included in the certificate of creditable coverage provided to *E* by Employer *W* indicating 300 days of dependent coverage or receives a separate certificate indicating 90 days of coverage. Employer *X*'s plan may impose a preexisting condition exclusion with respect to *E* for up to 2 months for any preexisting condition of *E* for which medical advice, diagnosis, care, or treatment was recommended or received by *E* within the 6-month period ending on *E*'s enrollment date in Employer *X*'s plan.

(2) *Adopted children.* Subject to paragraph (b)(3) of this section, a group health plan may not impose any preexisting condition exclusion in the case of a child who is adopted or placed for adoption before attaining 18 years of age and who, as of the last day of the 30-day period beginning on the date of the adoption or placement for adoption, is covered under creditable coverage. This rule does not apply to coverage before the date of such adoption or placement for adoption.

(3) *Break in coverage.* Paragraphs (b)(1) and (2) of this section no longer apply to a child after a significant break in coverage.

(4) *Pregnancy.* A group health plan may not impose a preexisting condition exclusion relating to pregnancy as a preexisting condition.

(5) *Special enrollment dates.* For special enrollment dates relating to new dependents, see § 54.9801–6T(b).

(c) *Notice of plan's preexisting condition exclusion.* A group health plan may not impose a preexisting condition exclusion with respect to a participant or dependent of the participant before notifying the participant, in writing, of the existence and terms of any preexisting condition exclusion under the plan and of the rights of individuals to demonstrate creditable coverage (and any applicable waiting periods) as required by § 54.9801–5T. The description of the rights of individuals to demonstrate creditable coverage includes a description of the right of the individual to request a certificate from a prior plan or issuer, if necessary, and a statement that the current plan or issuer will assist in obtaining a certificate from any prior plan or issuer, if necessary.

§ 54.9801–4T Rules relating to creditable coverage (temporary).

(a) *General rules*—(1) *Creditable coverage.* For purposes of this section,

except as provided in paragraph (a)(2) of this section, the term *creditable coverage* means coverage of an individual under any of the following:

(i) A group health plan as defined in § 54.9801–2T.

(ii) Health insurance coverage as defined in § 54.9801–2T (whether or not the entity offering the coverage is subject to chapter 100 of Subtitle K, and without regard to whether the coverage is offered in the group market, the individual market, or otherwise).

(iii) Part A or B of Title XVIII of the Social Security Act (Medicare).

(iv) Title XIX of the Social Security Act (Medicaid), other than coverage consisting solely of benefits under section 1928 of the Social Security Act (the program for distribution of pediatric vaccines).

(v) Title 10 U.S.C. Chapter 55 (medical and dental care for members and certain former members of the uniformed services, and for their dependents; for purposes of Title 10 U.S.C. Chapter 55, *uniformed services* means the armed forces and the Commissioned Corps of the National Oceanic and Atmospheric Administration and of the Public Health Service).

(vi) A medical care program of the Indian Health Service or of a tribal organization.

(vii) A State health benefits risk pool. For purposes of this section, a State health benefits risk pool means—

(A) An organization qualifying under section 501(c)(26);

(B) A qualified high risk pool described in section 2744(c)(2) of the PHSA; or

(C) Any other arrangement sponsored by a State, the membership composition of which is specified by the State and which is established and maintained primarily to provide health insurance coverage for individuals who are residents of such State and who, by reason of the existence or history of a medical condition—

(*1*) Are unable to acquire medical care coverage for such condition through insurance or from an HMO; or

(*2*) Are able to acquire such coverage only at a rate which is substantially in excess of the rate for such coverage through the membership organization.

(viii) A health plan offered under Title 5 U.S.C. Chapter 89 (the Federal Employees Health Benefits Program).

(ix) A public health plan. For purposes of this section, a public health plan means any plan established or maintained by a State, county, or other political subdivision of a State that provides health insurance coverage to individuals who are enrolled in the plan.

(x) A health benefit plan under section 5(e) of the Peace Corps Act (22 U.S.C. 2504(e)).

(2) *Excluded coverage*. Creditable coverage does not include coverage consisting solely of coverage of expected benefits (described in § 54.9804–1T).

(3) *Methods of counting creditable coverage*. For purposes of reducing any preexisting condition exclusion period, as provided under § 54.9801–3T(a)(1)(iii), a group health plan determines the amount of an individual's creditable coverage by using the standard method described in paragraph (b) of this section, except that the plan may use the alternative method under paragraph (c) of this section with respect to any or all of the categories of benefits described under paragraph (c)(3) of this section or may provide that a health insurance issuer offering health insurance coverage under the plan may use the alternative method of counting creditable coverage.

(b) *Standard method*—(1) *Specific benefits not considered*. Under the standard method, a group health plan determines the amount of creditable coverage without regard to the specific benefits included in the coverage.

(2) *Counting creditable coverage*—(i) *Based on days*. For purposes of reducing the preexisting condition exclusion period, a group health plan determines the amount of creditable coverage by counting all the days that the individual has under one or more types of creditable coverage. Accordingly, if on a particular day, an individual has creditable coverage from more than one source, all the creditable coverage on that day is counted as one day. Further, any days in a waiting period for a plan or policy are not creditable coverage under the plan or policy.

(ii) *Days not counted before significant break in coverage*. Days of creditable coverage that occur before a significant break in coverage are not required to be counted.

(iii) *Definition of significant break in coverage*. A significant break in coverage means a period of 63 consecutive days during all of which the individual does not have any creditable coverage, except that neither a waiting period nor an affiliation period is taken into account in determining a significant break in coverage. (See section 731(b)(2)(iii) of ERISA and section 2723(b)(2)(iii) of the PHSA which exclude from preemption State insurance laws that require a break of more than 63 days before an individual has a significant break in coverage for purposes of State law.)

(iv) *Examples*. The following examples illustrate how creditable coverage is counted in reducing preexisting condition exclusion periods under this paragraph (b)(2):

Example 1. (i) Individual *A* works for Employer *P* and has creditable coverage under Employer *P*'s plan for 18 months before *A*'s employment terminates. *A* is hired by Employer *Q*, and enrolls in Employer *Q*'s group health plan, 64 days after the last date of coverage under Employer *P*'s plan. Employer *Q*'s plan has a 12-month preexisting condition exclusion period.

(ii) In this *Example 1*, because *A* had a break in coverage of 63 days, Employer *Q*'s plan may disregard *A*'s prior coverage and *A* may be subject to a 12-month preexisting condition exclusions period.

Example 2. (i) Same facts as *Example 1*, except that *A* is hired by Employer *Q*, and enrolls in Employer *Q*'s plan, on the 63rd day after the last date of coverage under Employer *P*'s plan.

(ii) In this *Example 2*, *A* has a break in coverage of 62 days. Because *A*'s break in coverage is not a significant break in coverage, Employer *Q*'s plan must count *A*'s prior creditable coverage for purposes of reducing the plan's preexisting condition exclusion as it applies to *A*.

Example 3. (i) Same facts as *Example 1*, except that Employer *Q*'s plan provides benefits through an insurance policy that, as required by applicable State insurance laws, defines a significant break in coverage as 90 days.

(ii) In this *Example 3*, the issuer that provides group health insurance to Employer *Q*'s plan must count *A*'s period of creditable coverage prior to the 63-day break.

Example 4. (i) Same facts as *Example 3*, except that Employer *Q*'s plan is a self-insured plan, and, thus is not subject to State insurance laws.

(ii) In this *Example 4*, the plan is not governed by the longer break rules under State insurance law and *A*'s previous coverage may be disregarded.

Example 5. (i) Individual *B* begins employment with Employer *R* 45 days after terminating coverage under a prior group health plan. Employer *R*'s plan has a 30-day waiting period before coverage begins. *B* enrolls in Employer *R*'s plan when first eligible.

(ii) In this *Example 5*, *B* does not have a significant break in coverage for purposes of determining whether *B*'s prior coverage must be counted by Employer *R*'s plan. *B* has only a 44-day break in coverage because the 30-day waiting period is not taken into account in determining a significant break in coverage.

Example 6. (i) Individual *C* works for Employer *S* and has creditable coverage under Employer *S*'s plan for 200 days before *C*'s employment is terminated and coverage ceases. *C* is then unemployed for 51 days before being hired by Employer *T*. Employer *T*'s plan has a 3-month waiting period. *C* works for Employer *T* for 2 months and then terminates employment. Eleven days after terminating employment with Employer *T*, *C* begins working for Employer *U*. Employer

U's plan has no waiting period, but has a 6-month preexisting condition exclusion period.

(ii) In this *Example 6*, *C* does not have a significant break in coverage because, after disregarding the waiting period under Employer *T*'s plan, *C* had only a 62-break in coverage (51 days plus 11 days). Accordingly, *C* has 200 days of creditable coverage and Employer *U*'s plan may not apply its 6-month preexisting condition exclusion period with respect to *C*.

Example 7. (i) Individual *D* terminates employment with Employer *V* on January 13, 1998 after being covered for 24 months under Employer *V*'s group health plan. On March 17, the 63rd day without coverage, *D* applies for a health insurance policy in the individual market. *D*'s application is accepted and the coverage is made effective May 1.

(ii) In this *Example 7*, because *D* applied for the policy before the end of the 63rd day, coverage under the policy ultimately became effective, the period between the date of application and the first day of coverage is a waiting period and no significant break in coverage occurred even though the actual period without coverage was 107 days.

Example 8. (i) Same facts as *Example 7*, except that *D*'s application for a policy in the individual market is denied.

(ii) In this *Example 8*, because *D* did not obtain coverage following application, *D* incurred a significant break in coverage on the 64th day.

(v) *Other permissible counting methods—(A) Rule.* Notwithstandng any other provision of this paragraph (b)(2), for purposes of reducing a preexisting condition exclusion period (but not for purposes of issuing a certificate under § 54,9801–5T), a group health plan may determine the amount of creditable coverage in any other manner that is at least as favorable to the individual as the method set forth in this paragraph (b)(2), subject to the requirements of other applicable law.

(B) *Example.* The rule of this paragraph (b)(2)(v) is illustrated by the following example:

Example. (i) Individual *F* has coverage under group health plan *Y* from January 3, 1997 through March 25, 1997. *F* then becomes covered by group health plan *Z*. *F*'s enrollment date in Plan *Z* is May 1, 1997. Plan *Z* has a 12-month preexisting condition exclusion period.

(ii) In this *Example*, Plan *Z* may determine, in accordance with the rules prescribed in paragraph (b)(2) (i), (ii), and (iii), that *F* has 82 days of creditable coverage (29 days in January, 28 days in February, and 25 days in March). Thus, the preexisting condition exclusion period will no longer apply to *F* on February 8, 1998 (82 days before the 12-month anniversary of her enrollment (May 1)), For administrative convenience, however, Plan *Z* may consider that the preexisting condition exclusion period will no longer apply to *F* on the first day of the month (February 1).

(c) *Alternative method—(1) Specific benefits considered.* Under the alternative method, a group health plan determines the amount of creditable coverage based on coverage within any category of benefits described in paragraph (c)(3) of this section and not based on coverage for any other benefits. The plan may use the alternative method for any or all the categories. The plan may apply a different preexisting condition exclusion period with respect to each category (and may apply a different preexisting condition exclusion period for benefits that are not within any category). The creditable coverage determined for a category of benefits applies only for purposes of reducing the preexisting condition exclusion period with respect to that category. An individual's creditable coverage for benefits that are not within any category for which the alternative method is being used is determined under the standard method of paragraph (b) of this section.

(2) *Uniform application.* A plan using the alternative method is required to apply it uniformly to all participants and beneficiaries under the plan. A plan that provides benefits through one or more insurance policies (or in part through one or more insurance policies) will not fail the uniform application requirement of this paragraph (c)(2) if the alternative method is used (or not used) separately with respect to participants and beneficiaries under any policy, provided that the alternative method is applied uniformly with respect to all coverage under that policy. The use of the alternative method is required to be set forth in the plan.

(3) *Categories of benefits.* The alternative method for counting creditable coverage may be used for coverage for the following categories of benefits—

(i) Mental health;

(ii) Substance abuse treatment;

(iii) Prescription drugs;

(iv) Dental care; or

(v) Vision care.

(4) *Plan notice.* If the alternative method is used, the plan is required to—

(i) State prominently that the plan is using the alternative method of counting creditable coverage in disclosure statements concerning the plan, and state this to each enrollee at the time of enrollment under the plan; and

(ii) Include in these statements a description of the effect of using the alternative method, including an identification of the categories used.

(5) *Disclosure of information on previous benefits.* See § 54.9801–5T(b) for special rules concerning disclosure of coverage to a plan (or issuer) using the alternative method of counting creditable coverage under this paragraph (c).

(6) *Counting creditable coverage—(i) In general.* Under the alternative method, the group health plan counts creditable coverage within a category if any level of benefits is provided within the category. Coverage under a reimbursement account or arrangement such as a flexible spending arrangement (as defined in section 106(c)(2) of the Internal Revenue Code) does not constitute coverage within any category.

(ii) *Special rules.* In counting an individual's creditable coverage under the alternative method, the group health plan first determines the amount of the individual's creditable coverage that may be counted under paragraph (b) of this section, up to a total of 365 days of the most recent creditable coverage (546 days for a late enrollee). The period over which this creditable coverage is determined is referred to as the determination period. Then, for the category specified under the alternative method, the plan counts within the category all days of coverage that occurred during the determination period (whether or not a significant break in coverage for that category occurs), and reduces the individual's preexisting condition exclusion period for that category by that number of days. The plan may determine the amount of creditable coverage in any other reasonable manner, uniformly applied, this is at least as favorable to the individual.

(iii) *Example.* The rules of this paragraph (c)(6) are illustrated by the following example:

Example. (i) Individual *D* enrolls in Employer *V*'s plan on January 1, 2001. Coverage under the plan includes prescription drug benefits. On April 1, 2001, the plan ceases providing prescription drug benefits. *D*'s employment with Employer *V* ends on January 1, 2002, after *D* was covered under Employer *V*'s group health plan for 365 days. *D* enrolls in Employer *Y*'s plan on February 1, 2002 (*D*'s enrollment date). Employer *Y*'s plan uses the alternative method of counting creditable coverage and imposes a 12-month preexisting condition exclusion on prescription drug benefits.

(ii) In this *Example*, Employer *Y*'s plan may impose a 275-day preexisting condition exclusion with respect to *D* for prescription drug benefits because *D* had 90 days of creditable coverage relating to prescription drug benefits within *D*'s determination period.

§ 54.9801–5T Certification and disclosure of previous coverage (temporary).

(a) *Certificate of creditable coverage—(1) Entities required to provide certificate—(i) In general.* A group

health plan is required to furnish certificates of creditable coverage in accordance with this paragraph (a) of this section. (See PHSA section 2701(e) and ERISA section 701(e) under which this obligation is also imposed on a health insurance issuer offering group health insurance coverage.)

(ii) *Duplicate certificates not required.* An entity required to provide a certificate under this paragraph (a)(1) for an individual is deemed to have satisfied the certification requirements for that individual if another party provides the certificate, but only to the extent that information relating to the individual's creditable coverage and waiting or affiliation period is provided by the other party. For example, a group health plan is deemed to have satisfied the certification requirement with respect to a participant or beneficiary if any other entity actually provides a certificate that includes the information required under paragraph (a)(3) of this section with respect to the participant or beneficiary.

(iii) *Special rule for group health plans.* To the extent coverage under a plan consists of group health insurance coverage, the plan is deemed to have satisfied the certification requirements under this paragraph (a)(1) if any issuer offering the coverage is required to provide the certificates pursuant to an agreement between the plan and the issuer. For example, if there is an agreement between an issuer and the employer sponsoring the plan under which the issuer agrees to provide certificates for individuals covered under the plan, and the issuer fails to provide a certificate to an individual when the plan would have been required to provide one under this paragraph (a), then the plan does not violate the certification requirements of this paragraph (a) (though the issuer would have violated the certification requirements pursuant to section 2701(e) of the PHSA and section 701(e) of ERISA).

(iv) *Special rules relating to issuers providing coverage under a plan*—(A)(*1*) *Responsibility of issuer for coverage period.* See 29 CFR 2590.701–5 and 45 CFR 146.115, under which an issuer is not required to provide information regarding coverage provided to an individual by another party.

(*2*) *Example.* The rule referenced by this paragraph (a)(1)(iv)(A) is illustrated by the following example:

Example. (i) A plan offers coverage with an HMO option from one issuer and an indemnity option from a different issuer. The HMO has not entered into an agreement with the plan to provide certificates as permitted under paragraph (a)(1)(iii) of this section.

(ii) In this *Example,* if an employee switches from the indemnity option to the HMO option and later ceases to be covered under the plan, any certificate provided by the HMO is not required to provide information regarding the employee's coverage under the indemnity option.

(B) (*1*) *Cessation of issuer coverage prior to cessation of coverage under a plan.* If an individual's coverage under an issuer's policy ceases before the individual's coverage under the plan ceases, the issuer is required (under section 2701(e) of the PHSA and section 701(e) of ERISA) to provide sufficient information to the plan (or to another party designated by the plan) to enable a certificate to be provided by the plan (or other party), after cessation of the individual's coverage under the plan, that reflects the period of coverage under the policy. The provision of that information to the plan will satisfy the issuer's obligation to provide an automatic certificate for that period of creditable coverage for the individual under paragraph (a)(2)(ii) and (3) of this section. In addition, an issuer providing that information is required to cooperate with the plan in responding to any request made under paragraph (b)(2) of this section (relating to the alternative method of counting creditable coverage). If the individual's coverage under the plan ceases at the time the individual's coverage under the issuer's policy ceases, the issuer must provide an automatic certificate under paragraph (a)(2)(ii) of this section. An issuer may presume that an individual whose coverage ceases at a time other than the effective date for changing enrollment options has ceased to be covered under the plan.

(*2*) *Example.* The rule of this paragraph (a)(1)(iv)(B) is illustrated by the following example:

Example. (i) A group health plan provides coverage under an HMO option and an indemnity option with a different issuer, and only allows employees to switch on each January 1. Neither the HMO nor the indemnity issuer has entered into an agreement with the plan to provide automatic certificates as permitted under paragraph (a)(2)(ii) of this section.

(ii) In this *Example,* if an employee switches from the indemnity option to the HMO option on January 1, the issuer must provide the plan (or a person designated by the plan) with appropriate information with respect to the individual's coverage with the indemnity issuer. However, if the individual's coverage with the indemnity issuer ceases at a date other than January 1, the issuer is instead required to provide the individual with an automatic certificate.

(2) *Individuals for whom certificate must be provided; timing of issuance*—*(i) Individuals.* A certificate must be provided, without charge, for participants or dependents who are or were covered under a group health plan upon the occurrence of any of the events described in paragraph (a)(2)(ii) or (iii) of this section.

(ii) *Issuance of automatic certificates.* The certificates described in this paragraph (a)(2)(ii) are referred to as automatic certificates.

(A) *Qualified beneficiaries upon a qualifying event.* In the case of an individual who is a qualified beneficiary (as defined in section 4980B(g)(1)) entitled to elect COBRA continuation coverage, an automatic certificate is required to be provided at the time the individual would lose coverage under the plan in the absence of COBRA continuation coverage or alternative coverage elected instead of COBRA continuation coverage. A plan satisfies this requirement if it provides the automatic certificate no later than the time a notice is required to be furnished for a qualifying event under section 4980B(f)(6) (relating to notices required under COBRA).

(B) *Other individuals when coverage ceases.* In the case of an individual who is not a qualified beneficiary entitled to elect COBRA continuation coverage, an automatic certificate is required to be provided at the time the individual ceases to be covered under the plan. A plan satisfies this requirement if it provides the automatic certificate within a reasonable time period thereafter. In the case of an individual who is entitled to elect to continue coverage under a State program similar to COBRA and who receives the automatic certificate not later than the time a notice is required to be furnished under the State program, the certificate is deemed to be provided within a reasonable time period after the cessation of coverage under the plan.

(C) *Qualified beneficiaries when COBRA ceases.* In the case of an individual who is a qualified beneficiary and has elected COBRA continuation coverage (or whose coverage has continued after the individual became entitled to elect COBRA continuation coverage), an automatic certificate is to be provided at the time the individual's coverage under the plan ceases. A plan satisfies this requirement if it provides the automatic certificate within a reasonable time after coverage ceases (or after the expiration of any grace period for nonpayment of premiums). An automatic certificate is required to be provided to such an individual regardless of whether the individual has previously received an automatic certificate under paragraph (a)(2)(ii)(A) of this section.

(iii) *Any individual upon request.* Requests for certificates are permitted to be made by, or on behalf of, an individual within 24 months after coverage ceases. Thus, for example, a plan in which an individual enrolls may, if authorized by the individual, request a certificate of the individual's creditable coverage on behalf of the individual from a plan in which the individual was formerly enrolled. After the request is received, a plan or issuer is required to provide the certificate by the earliest date that the plan, acting in a reasonable and prompt fashion, can provide the certificate. A certificate is required to be provided under this paragraph (a)(2)(iii) even if the individual has previously received an automatic certificate under paragraph (a)(2)(ii) of this section.

(iv) *Examples.* The following examples illustrate the rules of this paragraph (a)(2):

Example 1. (i) Individual *A* terminates employment with Employer *Q. A* is a qualified beneficiary entitled to elect COBRA continuation coverage under Employer *q*'s group health plan. A notice of the rights provided under COBRA is typically furnished to qualified beneficiaries under the plan within 10 days after a covered employee terminates employment.

(ii) In this *Example 1*, the automatic certificate may be provided at the same time that *A* is provided the COBRA notice.

Example 2., (i) Same facts as *Example 1*, except that the automatic certificate for *A* is not completed by the time the COBRA notice is furnished to *A*.

(ii) In this *Example 2*, the automatic certificate may be provided within the period permitted by law for the delivery of notices under COBRA.

Example 3. (i) Employer *R* maintains an insured group health plan. *R* has never had 20 employees and thus *R*'s plan is not subject to the COBRA continuation coverage provisions. However, *R* is in a State that has a State program similar to COBRA. *B* terminates employment with *R* and loses coverage under *R*'s plan.

(ii) In this *Example 3*, the automatic certificate may be provided not later than the time a notice is required to be furnished under the State program.

Example 4. (i) Individual *C* terminates employment with Employer *S* and receives both a notice of *C*'s rights under COBRA and an automatic certificate. *C* elects COBRA continuation coverage under Employer *S*'s group health plan. After four months of COBRA continuation coverage and the expiration of a 30-day grace period, *S*'s group health plan determines that *C*'s COBRA continuation coverage has ceased due to failure to make a timely payment for continuation coverage.

(ii) In this *Example 4*, the plan must provide an updated automatic certificate to *C* within a reasonable time after the end of the grace period.

Example 5. (i) Individual *D* is currently covered under the group health plan of Employer *T*. *D* requests a certificate, as premitted under paragraph (a)(2)(iii). Under the procedure for Employer *T*'s plan, certificates are mailed (by first class mail) 7 business days following receipt of the request. This date reflects the earliest date that the plan, acting in a reasonable and prompt fashion, can provide certificates.

(ii) In this *Example 5*, the plan's procedure satisfies paragraph (a)(2)(iii) of this section.

(3) *Form and content of certificate*—(i) *Written certificate*—(A) *In general.* Except as provided in paragraph (a)(3)(i)(B) of this section, the certificate must be provided in writing (including any form approved by the Secretary as a writing).

(B) *Other permissible forms.* No written certificate is required to be provided under paragraph (a) with respect to a particular event described in paragraph (a)(2) (ii) or (iii) of this section if——

(*1*) An individual is entitled to receive a certificate;

(*2*) The individual requests that the certificate be sent to another plan or issuer instead of to the individual;

(*3*) The plan or issuer that would otherwise receive the certificate agrees to accept the information in this paragraph (a)(3) through means other than a written certificate (e.g., by telephone); and

(*4*) The receiving plan or issuer receives such information from the sending plan or issuer in such form within the time periods required under paragraph (a)(2) of this section.

(ii) *Required information.* The certificate must include the following——

(A) The date the certificate is issued;

(B) The name of the group health plan that provided the coverage described in the certificate;

(C) The name of the participant or dependent with respect to whom the certificate applies, and any other information necessary for the plan providing the coverage specified in the certificate to identify the individual, such as the individual's identification number under the plan and the name of the participant if the certificate is for (or includes) a dependent;

(D) The name, address, and telephone number of the plan administrator or issuer required to provide the certificate;

(E) The telephone number to call for further information regarding the certificate (if different from paragraph (a)(3)(ii)(D) of this section);

(F) Either—

(*1*) A statement that an individual has at least 18 months (for this purpose, 546 days is deemed to be 18 months) of creditable coverage, disregarding days of creditable coverage before a significant break in coverage, or

(*2*) The date any waiting period (and affiliation period, if applicable) began and the date creditable coverage began; and

(G) The date creditable coverage ended, unless the certificate indicates that creditable coverage is continuing as of the date of the certificate.

(iii) *Periods of coverage under certificate.* If an automatic certificate is provided pursuant to paragraph (a)(2)(ii) of this section, the period that must be included on the certificate is the last period of continuous coverage ending on the date coverage ceased. If an individual requests a certificate pursuant to paragraph (a)(2)(iii) of this section, a certificate must be provided for each period of continuous coverage ending within the 24-month period ending on the date of the request (or continuing on the date of the request). A separate certificate may be provided for each such period of continuous coverage.

(iv) *Combining information for families.* A certificate may provide information with respect to both a participant and the participant's dependents if the information is identical for each individual or, if the information is not identical, certificates may be provided on one form if the form provides all the required information for each individual and separately states the information that is not identical.

(v) *Model certificate.* The requirements of paragraph (a)(3)(ii) of this section are satisfied if the plan provides a certificate in accordance with a model certificate authorized by the Secretary.

(vi) *Excepted benefits; categories of benefits.* No certificate is required to be furnished with respect to excepted benefits described in § 54.9804–1T. In addition, the information in the certificate regarding coverage is not required to specify categories of benefits described in § 54.9801–4T(c) (relating to the alternative method of counting creditable coverage). However, if excepted benefits are provided concurrently with other creditable coverage (so that the coverage does not consist solely of excepted benefits), information concerning the benefits may be required to be disclosed under paragraph (b) of this section.

(4) *Procedures*—(i) *Method of delivery.* The certificate is required to be provided to each individual described in paragraph (a)(2) of this section or an entity requesting the certificate on behalf of the individual. The certificate

may be provided by first-class mail. If the certificate or certificates are provided to the participant and the participant's spouse at the participant's last known address, then the requirements of this paragraph (a)(4) are satisfied with respect to all individuals residing at that address. If a dependent's last known address is different than the participant's last known address, a separate certificate is required to be provided to the dependent at the dependent's last known address. If separate certificates are being provided by mail to individuals who reside at the same address, separate mailings of each certificate are not required.

(ii) *Procedure for requesting certificates.* A plan or issuer must establish a procedure for individuals to request and receive certificates pursuant to paragraph (a)(2)(iii) of this section.

(iii) *Designated recipients.* If an automatic certificate is required to be provided under paragraph (a)(2)(ii) of this section, and the individual entitled to receive the certificate designates another individual or entity to receive the certificate, the plan or issuer responsible for providing the certificate is permitted to provide the certificate to the designated party. If a certificate is required to be provided upon request under paragraph (a)(2)(iii) of this section and the individual entitled to receive the certificate designates another individual or entity to receive the certificate, the plan or issuer responsible for providing the certificate is required to provide the certificate to the designated party.

(5) *Special rules concerning dependent coverage*—(i)(A) *Reasonable efforts.* A plan is required to use reasonable efforts to determine any information needed for a certificate relating to the dependent coverage. In any case in which an automatic certificate is required to be furnished with respect to a dependent under paragraph (a)(2)(ii) of this section, no individual certificate is required to be furnished until the plan knows (or making reasonable efforts should know) of the dependent's cessation of coverage under the plan.

(B) *Example.* The rules of this paragraph (a)(5) are illustrated by the following example:

Example. (i) A group health plan covers employees and their dependents. The plan annually requests all employees to provide updated information regarding dependents, including the specific date on which an employee has a new dependent or on which a person ceases to be a dependent of the employee.

(ii) In this *Example,* the plan has satisfied the standard in this paragraph (a)(5)(i) of this section that it make reasonable efforts to determine the cessation of dependents' coverage and the related dependent coverage information.

(ii) *Special rules for demonstrating coverage.* If a certificate furnished by a plan or issuer does not provide the name of any dependent of an individual covered by the certificate, the individual may, if necessary, use the procedures described in paragraph (c)(4) of this section for demonstrating dependent status. In addition, an individual may, if necessary, use these procedures to demonstrate that a child was enrolled within 30 days of birth, adoption, or placement for adoption. See § 54.9801–3T(b), under which such a child would not be subject to a preexisting condition exclusion.

(iii) *Transition rule for dependent coverage through June 30, 1998*—(A) *In general.* A group health plan that cannot provide the names of dependents (or related coverage information) for purposes of providing a certificate of coverage for a dependent may satisfy the requirements of paragraph (a)(3)(ii)(C) of this section by providing the name of the participant covered by the group health plan and specifying that the type of coverage described in the certificate is for dependent coverage (e.g., family coverage or employee-plus-spouse coverage).

(B) *Certificates provided on request.* For purposes of certificates provided on the request of, or on behalf of, an individual pursuant to paragraph (a)(2)(iii) of this section, a plan must make reasonable efforts to obtain and provide the names of any dependent covered by the certificate where such information is requested to be provided. If a certificate does not include the name of any dependent of an individual covered by the certificate, the individual may, if necessary, use the procedures described in paragraph (c) of this section for submitting documentation to establish that the credible coverage in the certificate applies to the dependent.

(C) *Demonstrating a dependent's creditable coverage.* See paragraph (c)(4) of this section for special rules to demonstrate dependent status.

(D) *Duration.* This paragraph (a)(5)(iii) is only effective for certifications provided with respect to events occurring through June 30, 1998.

(6) *Special specification rules for entities not subject to Chapter 100 of Subtitle K of the Internal Revenue Code*—(i) *Issuers.* For rules requiring that issuers in the group and individual markets provide certificates consistent with the rules in this section, see section 701(e) of ERISA and sections 2701(e), 2721(b)(1)(B), and 2743 of the PHSA.

(ii) *Other entities.* For special rules requiring that certain other entities, not subject to Chapter 100 of Subtitle K of the Internal Revenue Code, provide certificates consistent with the rules in the section, see section 2791(a)(3) of the PHSA applicable to entities described in sections 2701(c)(1) (C), (D), (E), and (F) (relating to Medicare, Medicaid, CHAMPUS, and Indian Health Service), section 2721(b)(1)(A) of the PHSA applicable to nonfederal governmental plans generally, and section 2721(b)(2)(C)(ii) of the PHSA applicable to nonfederal governmental plans that elect to be excluded from the requirements of Subparts 1 and 3 of Part A of Title XXVII of the PHSA.

(b) *Disclosure of coverage to a plan, or issuer, using the alternative method of counting creditable coverage*—(1) *In general.* If an individual enrolls in a group health plan with respect to which the plan (or issuer) uses the alternative method of counting creditable coverage described in § 54.9801–4T(c), the individual provides a certificate of coverage under paragraph (a) of this section, and the plan (or issuer) in which the individual enrolls so requests, the entity that issued the certificate (the prior entity) is required to disclose promptly to a requesting plan (or issuer) (the requesting entity) the information set forth in paragraph (b)(2) of this section.

(2) *Information to be disclosed.* The prior entity is required to identify to the requesting entity the categories of benefits with respect to which the requesting entity is using the alternative method of counting creditable coverage, and the requesting entity may identify specific information that the requesting entity reasonably needs to order to determine the individual's creditable coverage with respect to any such category. The prior entity is required to disclose promptly to the requesting entity the creditable coverage information so requested.

(3) *Charge for providing information.* The prior entity furnishing the information under paragraph (b) of this section may charge the requesting entity for the reasonable cost of disclosing such information.

(c) *Ability of an individual to demonstrate creditable coverage and waiting period information*—(1) *In general.* The rules in this paragraph (c) implement section 9801(c)(4), which permits individuals to establish creditable coverage through means other than certificates, and section 9801(e)(3), which requires the Secretary to establish rules designed to prevent an

individual's subsequent coverage under a group health plan or health insurance coverage from being adversely affected by an entity's failure to provide a certificate with respect to that individual. If the accuracy of a certificate is contested or a certificate is unavailable when needed by the individual, the individual has the right to demonstrate creditable coverage (and waiting or affiliation periods) through the presentation of documents or other means. For example, the individual may make such a demonstration when—

(i) An entity has failed to provide a certificate within the required time period;

(ii) The individual has creditable coverage but an entity may not be required to provide a certificate of the coverage pursuant to paragraph (a) of this section;

(iii) The coverage is for a period before July 1, 1996;

(iv) The individual has an urgent medical condition that necessitates a determination before the individual can deliver a certificate to the plan; or

(v) The individual lost a certificate that the individual had previously received and is unable to obtain another certificate.

(2) *Evidence of creditable coverage*—(i) *Consideration of evidence.* A plan is required to take into account all information that it obtains or that is presented on behalf of an individual to make a determination, based on the relevant facts and circumstances, whether an individual has creditable coverage and is entitled to offset all or a portion of any preexisting condition exclusion period. A plan shall treat the individual as having furnished a certificate under paragraph (a) of this section if the individual attests to the period of creditable coverage, the individual also presents relevant corroborating evidence of some creditable coverage during the period, and the individual cooperates with the plan's efforts to verify the individual's coverage. For this purpose, cooperation includes providing (upon the plan's or issuer's request) a written authorization for the plan to request a certificate on behalf of the individual, and cooperating in efforts to determine the validity of the corroborating evidence and the dates of creditable coverage. While a plan may refuse to credit coverage where the individual fails to cooperate with the plan's or issuer's efforts to verify coverage, the plan may not consider an individual's inability to obtain a certificate to be evidence of the absence of creditable coverage.

(ii) *Documents.* Documents that may establish creditable coverage (and waiting periods or affiliation periods) in the absence of a certificate include explanations of benefit claims (EOB) or other correspondence from a plan or issuer indicating coverage, pay stubs showing a payroll deduction for health coverage, a health insurance identification card, a certificate of coverage under a group health policy, records from medical care providers indicating health coverage, third party statements verifying periods of coverage, and any other relevant documents that evidence periods of health coverage.

(iii) *Other evidence.* Creditable coverage (and waiting period or affiliation period information) may also be established through means other than documentation, such as by a telephone call from the plan or provider to a third party verifying creditable coverage.

(iv) *Example.* The rules of this paragraph (c)(2) are illustrated by the following example:

Example. (i) Individual *F* terminates employment with Employer *W* and, a month later, is hired by Employer *X*. Employer *X*'s group health plan imposes a preexisting condition exclusion of 12 months on new enrollees under the plan and uses the standard method of determining creditable coverage. *F* fails to receive a certificate of prior coverage from the self-insured group health plan maintained by *F*'s prior employer, Employer *W*, and requests a certificate. However, *F* (and Employer's *X*'s plan, on *F*'s behalf) is unable to obtain a certificate from Employer *W*'s plan. *F* attests that, to the best of *F*'s knowledge, *F* had at least 12 months of continuous coverage under Employer *W*'s plan, and that the coverage ended no earlier than *F*'s termination of employment from Employer *W*. In addition, *F* presents evidence of coverage, such as an explanation of benefits for a claim that was made during the relevant period.

(ii) In this *Example,* based solely on these facts, *F* has demonstrated creditable coverage for the 12 months of coverage under Employer *W*'s plan in the same manner as if *F* had presented a written certificate of creditable coverage.

(3) *Demonstrating categories of creditable coverage.* Procedures similar to those described in this paragraph (c) apply in order to determine an individual's creditable coverage with respect to any category under paragraph (b) of this section (relating to determining creditable coverage under the alternative method).

(4) *Demonstrating dependent status.* If, in the course of providing evidence (including a certificate) of creditable coverage, an individual is required to demonstrate dependent status, the group health plan or issuer is required to treat the individual as having furnished a certificate showing the dependent status if the individual attests to such dependency and the period of such status and the individual cooperates with the plan's or issuer's efforts to verify the dependent status.

(d) *Determination and notification of creditable coverage*—(1) *Reasonable time period.* In the event that a group health plan receives information under paragraph (a) of this section (certifications), paragraph (b) of this section (disclosure of information relating to the alternative method), or paragraph (c) of this section (other evidence of creditable coverage), the plan is required, within a reasonable time period following receipt of the information, to make a determination regarding the indivdiual's period of creditable coverage and notify the individual of the determination in accordance with paragraph (d)(2) of this section. Whether a determination and notification regarding an individual's creditable coverage is made within a reasonable time period is determined based on the relevant facts and circumstances. Relevant facts and circumstances include whether a plan's application of a preexisting condition exclusion would prevent an individual from having access to urgent medical services.

(2) *Notification to individual of period of preexisting condition exclusion.* A plan seeking to impose a preexisting condition exclusion is required to disclose to the individual, in writing, its determination of any preexisting condition exclusion period that applies to the individual, and the basis for such determination, including the source and substance of any information on which the plan relied. In addition, the plan is required to provide the individual with a written explanation of any appeal procedures established by the plan, and with a reasonable opportunity to submit additional evidence of creditable coverage. However, nothing in this paragraph (d) or paragraph (c) of this section prevents a plan from modifying an initial determination of creditable coverage if it determines that the individual did not have the claimed creditable coverage, provided that—

(i) A notice of such reconsideration, as described in this paragraph (d), is provided to the individual; and

(ii) Until the final determination is made, the plan, for purposes of approving access to medical services (such as a pre-surgery authorization), acts in a manner consistent with the initial determination.

(3) *Examples.* The following examples illustrate this paragraph (d):

Example 1. (i) Individual *G* is hired by Employer *Y*. Employer *Y*'s group health plan

imposes a preexisting condition exclusion for 12 months with respect to new enrollees and uses the standard method of determining creditable coverage. Employer *Y*'s plan determines that *G* is subject to a 4-month preexisting condition exclusion, based on a certificate of creditable coverage that is provided by *G* to Employer *Y*'s plan indicating 8 months of coverage under *G*'s prior group health plan.

(ii) In this *Example 1,* Employer *Y*'s plan must notify *G* within a reasonable period of time following receipt of the certificate that *G* is subject to a 4-month preexisting condition exclusion beginning on *G*'s enrollment date in *Y*'s plan.

Example 2. (i) Same facts as in *Example 1,* except that Employer *Y*'s plan determines that *G* has 14 months of creditable coverage based on *G*'s certificate indicating 14 months of creditable coverage under *G*'s prior plan.

(ii) In this *Example 2.* Employer *Y*'s plan is not required to notify *G* that *G* will not be subject to a preexisting condition exclusion.

Example 3. (i) Individual *H* is hired by Employer *Z*. Employer *Z*'s group health plan imposes a preexisting condition exclusion for 12 months with respect to new enrollees and uses the standard method of determining creditable coverage. *H* develops an urgent health condition before receiving a certificate of prior coverage. *H* attests to the period of prior coverage, presents corroborating documentation of the coverage period, and authorizes the plan to request a certificate on *H*'s behalf.

(ii) In this *Example 3,* Employer *Z*'s plan must review the evidence presented by *H.* In addition, the plan must make a determination and notify *H* regarding any preexisting condition exclusion period that applies to *H* (and the basis of such determination) within a reasonable time period following receipt of the evidence that is consistent with the urgency of *H's health condition* (this determination may be modified as permitted under paragraph (d)(2) of this section).

§ 54.9801–6T Special enrollment periods (temporary).

(a) *Special enrollment for certain individuals who lose coverage*—(1) *In general.* A group health plan is required to permit employees and dependents described in paragraph (a)(2), (3) or (4) of this section to enroll for coverage under the terms of the plan if the conditions in paragraph (a)(5) of this section are satisfied and the enrollment is requested within the period described in paragraph (a)(6) of this section. The enrollment is effective at the time described in paragraph (a)(7) of this section. The special enrollment rights under this paragraph (a) apply without regard to the dates on which an individual would otherwise be able to enroll under the plan. (See PHSA section 2701(f)(1) and ERISA section 701(f)(1) under which this obligation is also imposed on a health insurance issuer offering group health insurance coverage.)

(2) *Special enrollment of an employee only.* An employee is described in this paragraph (a)(2) if the employee is eligible, but not enrolled, for coverage under the terms of the plan and, when enrollment was previously offered to the employee under the plan and was declined by the employee, the employee was covered under another group health plan or had other health insurance coverage.

(3) *Special enrollment of dependents only.* A dependent is described in this paragraph (a)(3) if the dependent is a dependent of an employee participating in the plan, the dependent is eligible, but not enrolled, for coverage under the terms of the plan, and, when enrollment was previously offered under the plan was declined, the dependent was covered under another group health plan or had other health insurance coverage.

(4) *Special enrollment of both employee and dependent.* An employee and any dependent of the employee are described in this paragraph (a)(4) if they are eligible, but not enrolled, for coverage under the terms of the plan and, when enrollment was previously offered to the employee or dependent under the plan and was declined, the employee or dependent was covered under another group health plan or had other health insurance coverage.

(5) *Conditions for special enrollment.* An employee or dependent is eligible to enroll during a special enrollment period if each of the following applicable conditions is met:

(i) When the employee declined enrollment for the employee or the dependent, the employee stated in writing that coverage under another group health plan or other health insurance coverage was the reason for declining enrollment. This paragraph (a)(5)(i) applies only if—

(A) The plan required such a statement when the employee declined enrollment; and

(B) The employee is provided with notice of the requirement to provide the statement in this paragraph (a)(5)(i) (and the consequences of the employee's failure to provide the statement) at the time the employee declined enrollment.

(ii)(A) When the employee declined enrollment for the employee or dependent under the plan, the employee or dependent had CORRA continuation coverage under another plan and COBRA continuation coverage under that other plan has since been exhausted; or

(B) If the other coverage that applied to the employee or dependent when enrollment was declined was not under a COBRA continuation provision, either the other coverage has been terminated as a result of loss of eligibility for the coverage or employer contributions towards the other coverage have been terminated. For this purpose, loss of eligibility for coverage includes a loss of coverage as a result of legal separation, divorce, death, termination of employment, reduction in the number of hours of employment, and any loss of eligibility after a period that is measured by reference to any of the foregoing. Thus, for example, if an employee's coverage ceases following a termination of employment and the employee is eligible for but fails to elect COBRA continuation coverage, this is treated as a loss of eligibility under this paragraph (a)(5)(ii)(B). However, loss of eligibility does not include a loss due to failure of the individual or the participant to pay premiums on a timely basis or termination of coverage for cause (such as making a fraudulent claim or an intentional misrepresentation of a material fact in connection with the plan). In addition, for purposes of this paragraph (a)(5)(ii)(B), employer contributions include contributions by any current or former employer (of the individual or another person) that was contributing to coverage for the individual.

(6) *Length of special enrollment period.* The employee is required to request enrollment (for the employee or the employee's dependent, as described in paragraph (a) (2), (3), or (4) of this section) not later than 30 days after the exhaustion of the other coverage described in paragraph (a)(5)(ii)(A) of this section or termination of the other coverage as a result of the loss of eligibility for the other coverage for items described in paragraph (a)(5)(ii)(B) of this section or following the termination of employer contributions toward that other coverage. The plan may impose the same requirements that apply to employees who are otherwise eligible under the plan to immediately request enrollment for coverage (e.g., that the request be made in writing).

(7) *Effective date of enrollment.* Enrollment is effective not later than the first day of the first calendar month beginning after the date the completed request for enrollment is received.

(b) *Special enrollment with respect to certain dependent beneficiaries*—(1) *In general.* A group health plan that makes coverage available with respect to dependents of a participant is required to provide a special enrollment period to permit individuals described in paragraph (b) (2), (3), (4), (5), or (6) of this section to be enrolled for coverage under the terms of the plan if the enrollment is requested within the time

period described in paragraph (b)(7) of this section. The enrollment is effective at the time described in paragraph (b)(8) of this section. The special enrollment rights under this paragraph (b) apply without regard to the dates on which an individual would otherwise be able to enroll under the plan.

(2) *Special enrollment of an employee who is eligible but not enrolled.* An individual is described in this paragraph (b)(2) if the individual is an employee who is eligible, but not enrolled, in the plan, the individual would be a participant but for a prior election by the individual not to enroll in the plan during a previous enrollment period, and a person becomes a dependent of the individual through marriage, birth, or adoption or placement for adoption.

(3) *Special enrollment of a spouse of a participant.* An individual is described in this paragraph (b)(3) if either—

(i) The individual becomes the spouse of a participant; or

(ii) The individual is a spouse of the participant and a child becomes a dependent of the participant through birth, adoption or placement for adoption.

(4) *Special enrollment of an employee who is eligible but not enrolled and the spouse of such employee.* An employee who is eligible, but not enrolled, in the plan, and an individual who is a dependent of such employee, are described in this paragraph (b)(4) if the employee would be a participant but for a prior election by the employee not to enroll in the plan during a previous enrollment period, and either—

(i) The employee and the individual become married; or

(ii) The employee and individual are married and a child becomes a dependent of the employee through birth, adoption or placement for adoption.

(5) *Special enrollment of a dependent of a participant.* An individual is described in this paragraph (b)(5) if the individual is a dependent of a participant and the individual becomes a dependent of such participant through marriage, birth, or adoption or placement for adoption.

(6) *Special enrollment of an employee who is eligible but not enrolled and a new dependent.* An employee who is eligible, but not enrolled, in the plan, and an individual who is a dependent of the employee, are described in this paragraph (b)(6) if the employee would be a participant but for a prior election by the employee not to enroll in the plan during a previous enrollment period, and the dependent becomes a dependent of the employee through marriage, birth, or adoption or placement for adoption.

(7) *Length of special enrollment period.* The special enrollment period under paragraph (b)(1) of this section is a period of not less than 30 days and begins on the date of the marriage, birth, or adoption or placement for adoption (except that such period does not begin earlier than the date the plan makes dependent coverage generally available).

(8) *Effective date of enrollment.* Enrollment is effective—

(i) In the case of marriage, not later than the first day of the first calendar month beginning after the date the completed request for enrollment is received by the plan;

(ii) In the case of a dependent's birth, the date of such birth; and

(iii) In the case of a dependent's adoption or placement for adoption, the date of such adoption or placement for adoption.

(9) *Example.* The rules of this paragraph (b) are illustrated by the following example:

Example. (i) Employee *A* is hired on September 3, 1998 by Employer *X*, which has a group health plan in which *A* can elect to enroll either for employee-only coverage, for employee-plus-spouse coverage, or for family coverage, effective on the first day of any calendar quarter thereafter. *A* is married and has no children. *A* does not elect to join Employer *X's* plan (for employee-only coverage, employee-plus-spouse coverage, or family coverage) on October 1, 1998 or January 1, 1999. On February 15, 1999, a child is placed for adoption with *A* and *A*'s spouse.

(ii) In this *Example*, the conditions for special enrollment of an employee with a new dependent under paragraph (b)(2) of this section are satisfied, the conditions for special enrollment of an employee and a spouse with a new dependent under paragraph (b)(4) of this section are satisfied, and the conditions for special enrollment of an employee and a new dependent under paragraph (b)(6) of this section are satisfied. Accordingly, Employer *X*'s plan will satisfy this paragraph (b) if and only if it allows *A* to elect, by filing the required forms by March 16, 1999, to enroll in Employer *X*'s plan either with employee-only coverage, with employee-plus-spouse coverage, or with family coverage, effective as of February 15, 1999.

(c) *Notice of enrollment rights.* On or before the time an employee is offered the opportunity to enroll in a group health plan, the plan is required to provide the employee with a description of the plan's special enrollment rules under this section. For this purpose, the plan may use the following model description of the special enrollment rules under this section:

If you are declining enrollment for yourself or your dependents (including your spouse) because of other health insurance coverage, you may in the future be able to enroll yourself or your dependents in this plan, provided that you request enrollment within 30 days after your other coverage ends. In addition, if you have a new dependent as a result of marriage, birth, adoption, or placement for adoption, you may be able to enroll yourself and your dependents, provided that you request enrollment within 30 days after the marriage, birth, adoption, or placement for adoption.

(d) (1) *Special enrollment date definition.* A special enrollment date for an individual means any date in paragraph (a)(7) or (b)(8) of this section on which the individual has a right to have enrollment in a group health plan become effective under this section.

(2) *Examples.* The rules of this section are illustrated by the following examples:

Example 1. (i)(A) Employer *Y* maintains a group health plan that allows employees to enroll in the plan either—

(*1*) Effective on the first day of employment by an election filed within three days thereafter;

(*2*) Effective on any subsequent January 1 by an election made during the preceding months of November or December; or

(*3*) Effective as of any special enrollment date described in this section.

(B) Employee *B* is hired by Employer *Y* on March 15, 1998 and does not elect to enroll in Employer *Y*'s plan until January 31, 1999 when *B* loses coverage under another plan. *B* elects to enroll in Employer *Y*'s plan effective on February 1, 1999, by filing the completed request form by January 31, 1999, in accordance with the special rule set forth in paragraph (a) of this section.

(ii) In this *Example 1*, *B* has enrolled on a special enrollment date because the enrollment is effective at a date described in paragraph (a)(7) of this section.

Example 2. (i) Same facts as *Example 1*, except that *B*'s loss of coverage under the other plan occurs on December 31, 1998 and *B* elects to enroll in Employer *Y*'s plan effective on January 1, 1999 by filing the completed request form by December 31, 1998, in accordance with the special rule set forth in paragraph (a) of this section.

(ii) In this *Example 2*, *B* has enrolled on a special enrollment date because the enrollment is effective at a date described in paragraph (a)(7) of this section (even though this date is also a regular enrollment date under the plan).

§ 54.9802–1T Prohibiting discrimination against participants and beneficiaries based on a health status-related factor (temporary).

(a) *In eligibility to enroll*—(1) *In general.* Subject to paragraph (a)(2) of this section, a group health plan may not establish rules for eligibility (including continued eligibility) of any individual to enroll under the terms of the plan based on any of the following

health status-related factors in relation to the individual or a dependent of the individual:

(i) Health status.

(ii) Medical condition (including both physical and mental illnesses), as defined in § 54.9801–2T.

(iii) Claims experience.

(iv) Receipt of health care.

(v) Medical history.

(vi) Genetic information, as defined in § 54.9801–2T.

(vii) Evidence of insurability (including conditions arising out of acts of domestic violence).

(viii) Disability.

(2) *No application to benefits or exclusions.* To the extent consistent with section 9801 and § 54.9801–3T, paragraph (a)(1) of this section shall not be construed—

(i) To require a group health plan to provide particular benefits other than those provided under the terms of such plan; or

(ii) To prevent such a plan from establishing limitations or restrictions on the amount, level, extent, or nature of the benefits or coverage for similarly situated individuals enrolled in the plan or coverage.

(3) *Construction.* For purposes of paragraph (a)(1) of this section, rules for eligibility to enroll include rules defining any applicable waiting (or affiliation) periods for such enrollment and rules relating to late and special enrollment.

(4) *Example.* The following example illustrates the rules of this paragraph (a):

Example. (i) An employer sponsors a group health plan that is available to all employees who enroll within the first 30 days of their employment. However, individuals who do not enroll in the first 30 days cannot enroll later unless they pass a physical examination.

(ii) In this *Example,* the plan discriminates on the basis of one or more health status-related factors.

(b) *In premiums or contributions*—(1) *In general.* A group health plan may not require an individual (as a condition of enrollment or continued enrollment under the plan) to pay a premium or contribution that is greater than the premium or contribution for a similarly situated individual enrolled in the plan based on any health status-related factor, in relation to the individual or a dependent of the individual.

(2) *Construction.* Nothing in paragraph (b)(1) of this section shall be construed—

(i) To restrict the amount that an employer may be charged by an issuer for coverage under a group health plan; or

(ii) To prevent a group health plan from establishing premium discounts or rebates or modifying otherwise applicable copayments or deductibles in return for adherence to a bona fide wellness program. For purposes of this section, a bona fide wellness program is a program of health promotion and disease prevention.

(3) *Example.* The rules of this paragraph (b) are illustrated by the following example:

Example. (i) Plan *X* offers a premium discount to participants who adhere to a cholesterol-reduction wellness program. Enrollees are expected to keep a diary of their food intake over 6 weeks. They periodically submit the diary to the plan physician who responds with suggested diet modifications. Enrollees are to modify their diets in accordance with the physician's recommendations. At the end of the 6 weeks, enrollees are given a cholesterol test and those who achieve a count under 200 receive a premium discount.

(ii) In this *Example,* because enrollees who otherwise comply with the program may be unable to achieve a cholesterol count under 200 due to a health status-related factor, this is not a bona fide wellness program and such discounts would discriminate impermissibly based on one or more health status-related factors. However, if, instead, individuals covered by the plan were entitled to receive the discount for complying with the diary and dietary requirements and were not required to pass a cholesterol test, the program would be a bona fide wellness program.

§ 54.9804–1T Special rules relating to group health plans (temporary).

(a) *General exception small group health plans.* The requirements of Chapter 100 of Subtitle K of the Internal Revenue Code do not apply to any group health plan for any plan year if, on the first day of the plan year, the plan has fewer than 2 participants who are current employees.

(b) *Excepted benefits*—(1) *In general.* The requirements of §§ 54.9801–1T through 54.9801–6T and 54.9802–1T do not apply to any group health plan in relation to its provision of the benefits described in paragraph (b) (2), (3), (4), or (5) of this section (or any combination of these benefits).

(2) *Benefits excepted in all circumstances.* The following benefits are excepted in all circumstances—

(i) Coverage only for accident (including accidental death and dismemberment);

(ii) Disability income insurance;

(iii) Liability insurance, including general liability insurance and automobile liability insurance;

(iv) Coverage issued as a supplement to liability insurance;

(v) Workers' compensation or similar insurance;

(vi) Automobile medical payment insurance;

(vii) Credit-only insurance (for example, mortgage insurance); and

(viii) Coverage for on-site medical clinics.

(3) *Limited excepted benefits*—

(i) *In general.* Limited-scope dental benefits, limited-scope vision benefits, or long-term care benefits are excepted if they are provided under a separate policy, certificate, or contract of insurance, or are otherwise not an integral part of the plan, as defined in paragraph (b)(3)(ii) of this section.

(ii) *Integral.* For purposes of paragraph (b)(3)(i) of this section, benefits are deemed to be an integral part of a plan unless a participate has the right to elect not to receive coverage for the benefits and, if the participant elects to receive coverage for the benefits, the participant pays an additional premium or contribution for that coverage.

(iii) *Limited scope.* Limited scope dental or vision benefits are dental or vision benefits that are sold under a separate policy or rider and that are limited in scope in a narrow range or type of benefits that are generally excluded from hospital/medical/surgical benefit packages.

(iv) *Long-term care.* Long-term care benefits are benefits that are either—

(A) Subject to State long-term care insurance laws;

(B) For qualified long-term care insurance services; as defined in section 7702B(c)(1) of the Internal Revenue Code, or provided under a qualified long-term care insurance contract, as defined in section 7702B(b); or

(C) Based on cognitive impairment or a loss of functional capacity that is expected to be chronic.

(4) *Noncoordinated benefits*—(i) *Excepted benefits that are not coordinated.* Covered for only a specified disease or illness (for example, cancer-only policies) or hospital indemnity or other fixed dollar indemnity insurance (for example, $100/day) is excepted only if it meets each of the conditions specified in paragraph (b)(4)(ii) of this section.

(ii) *Conditions.* Benefits are described in paragraph (b)(4)(i) of this section only if—

(A) The benefits are provided under a separate policy, certificate, or contract of insurance;

(B) There is not coordination between the provision of the benefits and an exclusion of benefits under any group health plan maintained by the same plan sponsor; and

(C) The benefits are paid with respect to an event without regard to whether benefits are provided with respect to the

event under any group health plan maintained by the same plan sponsor.

(5) *Supplemental benefits.* The following benefits are excepted only if they are provided under a separate policy, certificate, or contract of insurance—

(i) Medicare supplemental health insurance (as defined under section 1882(g)(1) of the Social Security Act; also known as Medigap or MedSupp insurance);

(ii) Coverage supplemental to the coverage provided under Chapter 55, Title 10 of the United States Code (also known as CHAMPUS supplemental programs); and

(iii) Similar supplemental coverage provided to coverage under a group health plan.

(c) *Treatment of partnerships.* [Reserved]

§ 54.9806–1T Effective dates (temporary).

(a) *General effective dates*—(1) *Non-collectively-bargained plans.* Except as otherwise provided in this section, Chapter 100 of Subtitle K of the Internal Revenue Code and §§ 54.9801–1T through 54.9804–1T apply with respect to group health plans for plan years beginning after June 30, 1997.

(2) *Collectively bargained plans.* Except as otherwise provided in this section (other than paragraph (a)(1) of this section), in the case of a group health plan maintained pursuant to one or more collective bargaining agreements between employee representatives and one or more employers ratified before August 21, 1996, Chapter 100 of Subtitle K of the Internal Revenue Code and §§ 54.9801–1T through 54.9804–1T do not apply to plan years beginning before the later of July 1, 1997, or the date on which the last of the collective bargaining agreements relating to the plan terminates (determined without regard to any extension thereof agreed to after August 21, 1996). For these purposes, any plan amendment made pursuant to a collective bargaining agreement relating to the plan, that amends the plan solely to conform to any requirement of such part, is not treated as a termination of the collective bargaining agreement.

(3)(i) *Preexisting condition exclusion periods for current employees.* Any preexisting condition exclusion period permitted under § 54.9801–3T is measured from the individual's enrollment date in the plan. Such exclusion period, as limited under § 54.9801–3T, may be completed prior to the effective date of the Health Insurance Portability and Accountability Act of 1996 (HIPAA) for his or her plan. Therefore, on the date the individual's plan becomes subject to Chapter 100 of Subtitle K of the Internal Revenue Code, no preexisting condition exclusion may be imposed with respect to an individual beyond the limitation in § 54.9801–3T. For an individual who has not completed the permitted exclusion period under HIPPA, upon the effective date for his or her plan, the individual may use creditable coverage that the individual had prior to the enrollment date to reduce the remaining preexisting condition exclusion period applicable to the individual.

(ii) *Examples.* The following examples illustrate the rules of this paragraph (a)(3):

Example 1. (i) Individual *A* has been working for Employer *X* and has been covered under Employer *X*'s plan since March 1, 1997. Under Employer *X*'s plan, as in effect before January 1, 1998, there is no coverage for any preexisting condition. Employer *X*'s plan year begins on January 1, 1998. *A*'s enrollment date in the plan is March 1, 1997 and *A* has no creditable coverage before this date.

(ii) In this *Example 1,* Employer *X* may continue to impose the preexisting condition exclusion under the plan through February 28, 1998 (the end of the 12-month period using anniversary dates).

Example 2. (i) Same facts as in *Example 1,* except that *A*'s enrollment date was August 1, 1996, instead of March 1, 1997.

(ii) In this *Example 2,* on January 1, 1998, Employer *X*'s plan may no longer exclude treatment for any preexisting condition that *A* may have; however, because Employer *X*'s plan is not subject to HIPAA until January 1, 1998, *A* is not entitled to claim reimbursement for expenses under the plan for treatments for any preexisting condition of *A* received before January 1, 1998.

(b) *Effective date for certification requirement*—(1) *In general.* Subject to the transitional rule in § 54.9801–5T(a)(5)(iii), the certification rules of § 54.9801–5T apply to events occurring on or after July 1, 1996.

(2) *Period covered by certificate.* A certificate is not required to reflect coverage before July 1, 1996.

(3) *No certificate before June 1, 1997.* Notwithstanding any other provision of § 54.9801–5T, in no case is a certificate required to be provided before June 1, 1997.

(c) *Limitation on actions.* No enforcement action is to be taken, pursuant to Chapter 100 of Subtitle K of the Internal Revenue Code, against a group health plan or health insurance issuer with respect to a violation of a requirement imposed by Chapter 100 of Subtitle K of the Internal Revenue Code before January 1, 1998 if the plan or issuer has sought to comply in good faith with such requirements. Compliance with these regulations is deemed to be good faith compliance with the requirements of Chapter 100 of Subtitle K.

(d) *Transition rules for counting creditable coverage.* An individual who seeks to establish creditable coverage for periods before July 1, 1996 is entitled to establish such coverage through the presentation of documents or other means in accordance with the provisions of § 54.9801–5T(c). For coverage relating to an event occurring before July 1, 1996, a group health plan and a health insurance issuer is not subject to any penalty or enforcement action with respect to the plan's or issuer's counting (or not counting) such coverage if the plan or issuer has sought to comply in good faith with the applicable requirements under § 54.9801–5T(c).

(e) *Transition rules for certificates of creditable coverage*—(1) *Certificates only upon request.* For events occurring on or after July 1, 1996 but before October 1, 1996, a certificate is required to be provided only upon a written request by or on behalf of the individual to whom the certificate applies.

(2) *Certificates before June 1, 1997.* For events occurring on or after October 1, 1996 and before June 1, 1997, a certificate must be furnished no later than June 1, 1997, or any later date permitted under § 54.9801–5T(a)(2) (ii) and (iii).

(3) *Optional notice*—(i) *In general.* This paragraph (e)(3) applies with respect to events described in § 54.9801–5T(a)(5)(ii), that occur on or after October 1, 1996 but before June 1, 1997. A group health plan or health insurance issuer offering group health coverage is deemed to satisfy § 54.9801–5T(a) (2) and (3) if a notice is provided in accordance with the provisions of paragraphs (e)(3) (i) through (iv) of this section.

(ii) *Time of notice.* The notice must be provided no later than June 1, 1997.

(iii) *Form and content of notice.* A notice provided pursuant to this paragraph (e)(3) must be in writing and must include information substantially similar to the information included in a model notice authorized by the Secretary. Copies of the model notice are available at the following website—http://www.irs.ustreas.gov (or call (202) 622–4695).

(iv) *Providing certificate after request.* If an individual requests a certificate following receipt of the notice, the certificate must be provided at the time of the request as set forth in § 54.9801–5T(a)(5)(iii).

(v) *Other certification rules apply.* The rules set forth in § 54.9801–5T(a)(4)(i) (method of delivery) and

54.9801–5T(a)(1) (entities required to provide a certificate) apply with respect to the provision of the notice.

Dated: March 24, 1997.

Margaret Milner Richardson,

Commissioner of Internal Revenue.

Approved:

Donald C. Lubick,

Assistant Secretary of the Treasury.

Pension and Welfare Benefits Administration

29 CFR Chapter XXV

For the reasons set forth above, Chapter XXV of Title 29 of the Code of Federal Regulations is amended as set forth below:

1. A new Subchapter L, consisting of Part 2590, is added to read as follows:

Subchapter L—Health Insurance Portability and Renewability for Group Health Plans

PART 2590—RULES AND REGULATIONS FOR HEALTH INSURANCE PORTABILITY AND RENEWABILITY FOR GROUP HEALTH PLANS

Subpart A—Requirements Relating to Access and Renewability of Coverage, and Limitation on Preexisting Condition Exclusion Periods

Sec.
2590.701–1 Basis and scope.
2590.701–2 Definitions.
2590.701–3 Limitations on preexisting condition exclusion period.
2590.701–4 Rules relating to creditable coverage.
2590.701–5 Certification and disclosure of previous coverage.
2590.701–6 Special enrollment periods.
2590.701–7 HMO affiliation period as alternative to preexisting condition exclusion.
2590.702 Prohibiting discrimination against participants and beneficiaries based on a health status-related factor.
2590.703 Guaranteed renewability in multiemployer plans and multiple employer welfare arrangements. [Reserved]

Subpart B—Other Requirements

2590.711 Standards relating to benefits for mothers and newborns. [Reserved]
2590.712 Parity in the application of certain limits to mental health benefits. [Reserved]

Subpart C—General Provisions

2590.731 Preemption; State flexibility; construction.
2590.732 Special rules relating to group health plans.
2590.734 Enforcement. [Reserved]
2590.736 Effective dates.

Authority: Sec. 29 U.S.C. 1027, 1059, 1135, 1171, 1194; Sec. 101, Pub. L. 104–191, 101 Stat. 1936 (29 U.S.C. 1181); Secretary of labor's Order No. 1–87, 52 FR 13139, April 21, 1987.

Subpart A—Requirements Relating to Access and Renewability of Coverage, and Limitations on Preexisting Condition Exclusion Periods

§ 2590.701–1 Basis and scope.

(a) *Statutory basis.* This subpart implements Part 7 of Subtitle B of Title I of the Employee Retirement Income Security Act of 1974, as amended (hereinafter ERISA or the Act).

(b) *Scope.* A group health plan or health insurance issuer offering group health insurance coverage may provide greater rights to participants and beneficiaries than those set forth in this subpart. This subpart A sets forth minimum requirements for group health plans and health insurance issuers offering group health insurance coverage concerning:

(1) Limitations on a preexisting condition exclusion period.

(2) Certificates and disclosure of previous coverage.

(3) Rules relating to counting creditable coverage.

(4) Special enrollment periods.

(5) Use of an affiliation period by an HMO as an alternative to a preexisting condition exclusion.

§ 2590.701–2 Definitions.

Unless otherwise provided, the definitions in this section govern in applying the provisions of §§ 2590.701 through 2590.734.

Affiliation period means a period of time that must expire before health insurance coverage provided by an HMO becomes effective, and during which the HMO is not required to provide benefits.

COBRA definitions:

(1) *COBRA* means Title X of the Consolidated Omnibus Budget Reconciliation Act of 1985, as amended.

(2) *COBRA continuation coverage* means coverage, under a group health plan, that satisfies an applicable COBRA continuation provision.

(3) *COBRA continuation provision* means sections 601–608 of the Act, section 4980B of the Code (other than paragraph (f)(1) of such section 4980B insofar as it relates to pediatric vaccines), and Title XXII of the PHSA.

(4) *Exhaustion of COBRA continuation coverage* means that an individual's COBRA continuation coverage ceases for any reason other than either failure of the individual to pay premiums on a timely basis, or for cause (such as making a fraudulent claim or an intentional misrepresentation of a material fact in connection with the plan). An individual is considered to have exhausted COBRA continuation coverage if such coverage ceases—

(i) Due to the failure of the employer or other responsible entity to remit premiums on a timely basis; or

(ii) When the individual no longer resides, lives, or works in a service area of an HMO or similar program (whether or not within the choice of the individual) and there is no other COBRA continuation coverage available to the individual.

Condition means a medical condition.

Creditable coverage means creditable coverage within the meaning of § 2590.701–4(a).

Enroll means to become covered for benefits under a group health plan (i.e., when coverage becomes effective), without regard to when the individual may have completed or filed any forms that are required in order to enroll in the plan. For this purpose, an individual who has health insurance coverage under a group health plan is enrolled in the plan regardless of whether the individual elects coverage, the individual is a dependent who becomes covered as a result of an election by a participant, or the individual becomes covered without an election.

Enrollment date definitions (*enrollment date* and *first day of coverage*) are set forth in § 2590.701–3(a)(2) (i) and (ii).

Excepted benefits means the benefits described as excepted in § 2590.732(b).

Genetic information means information about genes, gene products, and inherited characteristics that may derive from the individual or a family member. This includes information regarding carrier status and information derived from laboratory tests that identify mutations in specific genes or chromosomes, physical medical examinations, family histories, and direct analysis of genes or chromosomes.

Group health insurance coverage means health insurance coverage offered in connection with a group health plan.

Group health plan means an employee welfare benefit plan to the extent that the plan provides medical care (including items and services paid for as medical care) to employees or their dependents (as defined under the terms of the plan) directly or through insurance, reimbursement, or otherwise.

Group market means the market for health insurance coverage offered in connection with a group health plan. (However, certain very small plans may be treated as being in the individual market, rather than the group market; see the definition of individual market in this section.)

Health insurance coverage means benefits consisting of medical care (provided directly, through insurance or

reimbursement, or otherwise) under any hospital or medical service policy or certificate, hospital or medical service plan contract, or HMO contract offered by a health insurance issuer.

Health insurance issuer or *issuer* means an insurance company, insurance service, or insurance organization (including an HMO) that is required to be licensed to engage in the business of insurance in a State and that is subject to State law that regulates insurance (within the meaning of section 514(b)(2) of the Act). Such term does not include a group health plan.

Health maintenance organization or *HMO* means—

(1) A federally qualified health maintenance organization (as defined in section 1301(a) of the PHSA);

(2) An organization recognized under State law as a health maintenance organization; or

(3) A similar organization regulated under State law for solvency in the same manner and to the same extent as such a health maintenance organization.

Individual health insurance coverage means health insurance coverage offered to individuals in the individual market, but does not include short-term, limited duration insurance. For this purpose, short-term, limited-duration insurance means health insurance coverage provided pursuant to a contract with an issuer that has an expiration date specified in the contract (taking into account any extensions that may be elected by the policyholder without the issuer's consent) that is within 12 months of the date such contract becomes effective. Individual health insurance coverage can include dependent coverage.

Individual market means the market for health insurance coverage offered to individuals other than in connection with a group health plan. Unless a State elects otherwise in accordance with section 2791(e)(1)(B)(ii) of the PHSA, such term also includes coverage offered in connection with a group health plan that has fewer than two participants as current employees on the first day of the plan year.

Internal Revenue Code (Code) means the Internal Revenue Code of 1986, as amended (Title 26, United States Code).

Issuer means a health insurance issuer.

Late enrollment definitions (late enrollee) and *late enrollment)* are set forth in § 2590.701–3(a)(2) (iii) and (iv).

Medical care means amounts paid for—

(1) The diagnosis, cure, mitigation, treatment, or prevention of disease, or amounts paid for the purpose of affecting any structure or function of the body;

(2) Transportation primarily for and essential to medical care referred to in paragraph (1) of this definition; and

(3) Insurance covering medical care referred to in paragraphs (1) and (2) of this definition.

Medical condition or *condition* means any condition, whether physical or mental, including, but not limited to, any condition resulting from illness, injury (whether or not the injury is accidental), pregnancy, or congenital malformation. However, genetic information is not a condition.

Placement, or being placed, for adoption means the assumption and retention of a legal obligation for total or partial support of a child by a person with whom the child has been placed in anticipation of the child's adoption. The child's placement for adoption with such person terminates upon the termination of such legal obligation.

Plan year means the year that is designated as the plan year in the plan document of a group health plan, except that if the plan document does not designate a plan year or if there is no plan document, the plan year is—

(1) The deductible/limit year used under the plan;

(2) If the plan does not impose deductibles or limits on a yearly basis, then the plan year is the policy year;

(3) If the plan does not impose deductibles or limits on a yearly basis, and either the plan is not insured or the insurance policy is not renewed on an annual basis, then the plan year is the employer's taxable year; or

(4) In any other case, the plan year is the calendar year.

Preexisting condition exclusion means a limitation or exclusion of benefits relating to a condition based on the fact that the condition was present before the first day of coverage, whether or not any medical advice, diagnosis, care, or treatment was recommended or received before that day. A preexisting condition exclusion includes any exclusion applicable to an individual as a result of information that is obtained relating to an individual's health status before the individual's first day of coverage, such as a condition identified as a result of a pre-enrollment questionnaire or physical examination given to the individual, or review of medical records relating to the pre-enrollment period.

Public health plan means *public health plan* within the meaning of § 2590.701–4(a)(1)(ix).

Public Health Service Act (PHSA) means the Public Health Service Act (42 U.S.C. 201, *et seq.).*

Significant break in coverage means a significant break in coverage within the meaning of § 2590.701–4(b)(2)(iii).

Special enrollment date means a special enrollment date within the meaning of § 2590.701–6(d).

State means each of the several States, the District of Columbia, Puerto Rico, the Virgin Islands, Guam, American Samoa, and the Northern Mariana Islands.

State health benefits risk pool means a State health benefits risk pool within the meaning of § 2590.701–4(a)(1)(vii).

Waiting period means the period that must pass before an employee or dependent is eligible to enroll under the terms of a group health plan. If an employee or dependent enrolls as a late enrollee or on a special enrollment date, any period before such late or special enrollment is not a waiting period. If an individual seeks and obtains coverage in the individual market, any period after the date the individual files a substantially complete application for coverage and before the first day of coverage is a waiting period.

§ 2590.701–3 Limitations on preexisting condition exclusion period.

(a) *Preexisting condition exclusion*—(1) *In general.* Subject to paragraph (b) of this section, a group health plan, and a health insurance issuer offering group health insurance coverage, may impose, with respect to a participant or beneficiary, a preexisting condition exclusion only if the requirements of this paragraph (a) are satisfied.

(i) *6-month look-back rule.* A preexisting condition exclusion must relate to a condition (whether physical or mental), regardless of the cause of the condition, for which medical advice, diagnosis, care, or treatment was recommended or received within the 6-month period ending on the enrollment date.

(A) For purposes of this paragraph (a)(1)(i), medical advice, diagnosis, care, or treatment is taken into account only if it is recommended by, or received from, an individual licensed or similarly authorized to provide such services under State law and operating within the scope of practice authorized by State law.

(B) For purposes of this paragraph (a)(1)(i), the 6-month period ending on the enrollment date begins on the 6-month anniversary date preceding the enrollment date. For example, for an enrollment date of August 1, 1998, the 6-month period preceding the enrollment date is the period commencing on February 1, 1998 and continuing through July 31, 1998. As another example, for an enrollment date

of August 30, 1998, the 6-month period preceding the enrollment date is the period commencing on February 28, 1998 and continuing through August 29, 1998.

(C) The rules of this paragraph (a)(1)(i) are illustrated by the following examples:

Example 1. (i) Individual *A* is treated for a medical condition 7 months before the enrollment date in Employer *R*'s group health plan. As part of such treatment, *A*'s physician recommends that a follow-up examination be given 2 months later. Despite this recommendation. *A* does not receive a follow-up examination and no other medical advice, diagnosis, care, or treatment for that condition is recommended to *A* or received by *A* during the 6-month period ending on *A*'s enrollment date in Employer *R*'s plan.

(ii) In this *Example 1,* Employer *R*'s plan may not impose a preexisting condition exclusion period with respect to the condition for which *A* received treatment 7 months prior to the enrollment date.

Example 2. (i) Same facts as *Example 1,* except that Employer *R*'s plan learns of the condition and attaches a rider to *A*'s policy excluding coverage for the condition. Three months after enrollment, *A*'s condition recurs, and Employer *R*'s plan denies payment under the rider.

(ii) In this *Example 2,* The rider is preexisting condition exclusion and Employer *R*'s plan may not impose a preexisting condition exclusion with respect to the condition for which *A* received treatment 7 months prior to the enrollment date.

Example 3. (i) Individual *B* has asthma and is treated for that condition several times during the 6-month period before *B*'s enrollment date in Employer *S*'s plan. The plan imposes a 12-month preexisting condition exclusion. *B* has no prior creditable coverage to reduce the exclusion period. Three months after the enrollment date, *B* begins coverage under Employer *S*'s plan. Two months later, *B* is hospitalized asthma.

(ii) In this *Example 3,* Employer *S*'s plan may exclude payment for the hospital stay and the physician services associated with this illness because the care is related to a medical condition for which treatment was received by *B* during the 6-month period before the enrollment date.

Example 4. (i) Individual *D,* who is subject to a preexisting exclusion imposed by Employer *U*'s plan, has diabetes, as well as a foot condition caused by poor circulation and retinal degeneration (both of which are conditions that may be directly attributed to diabetes). After enrolling in the plan, *D* stumbles and breaks a leg.

(ii) In this *Example 4,* the leg is fracture is not a condition related to *D*'s diabetes, even though poor circulation in *D*'s extremities and poor vision may have contributed towards the accident. However, any additional medical services that may be needed because of *D*'s preexisting diabetic condition that would not be needed by another patient with a broken leg who does not have diabetes may be subject to the preexisting condition exclusion imposed under Employer *U*'s plan.

(ii) *Maximum length of preexisting condition exclusion (the look-forward rule).* A preexisting condition exclusion is not permitted to extend for more than 12 months (18 months in the case of a late enrollee) after the enrollment date. For purposes of this paragraph (a)(1)(ii), the 12-month and 18-month periods after the enrollment date are determined by reference to the anniversary of the enrollment date. For example, for an enrollment date of August 1, 1998, the 12-month period after the enrollment date is the period commencing on August 1, 1998 and continuing through July 31, 1999.

(iii) *Reducing a preexisting condition exclusion period by creditable coverage.* The period of any preexisting condition exclusion that would otherwise apply to an individual under a group health plan is reduced by the number of days of creditable coverage the individual has as of the enrollment date, as counted under § 2590.701–4. For purposes of this subpart the phrase ''days of creditable coverage'' has the same meaning as the phrase ''aggregate of the periods of creditable coverage'' as such term is used in section 701(a)(3) of the Act.

(iv) *Other Standards.* See § 2590.702 for other standards that may apply with respect to certain benefits limitations or restrictions under a group health plan.

(2) *Enrollment definitions*—(i) *Enrollment date* means the first day of coverage or, if there is a waiting period, the first day of the waiting period.

(ii)(A) *First day of coverage* means, in the case of an individual covered for benefits under a group health plan in the group market, the first day of coverage under the plan and, in the case of an individual covered by health insurance coverage in the individual market, the first day of coverage under the policy.

(B) The following example illustrates the rule of paragraph (a)(2)(ii)(A) of this section:

Example. (i) Employer *V*'s group health plan provides for coverage to begin on the first day of the first payroll period following the date an employee is hired and completes the applicable enrollment forms, or on any subsequent January 1 after completion of the applicable enrollment forms. Employer's *V*'s plan imposes a preexisting condition exclusion for 12 months (reduced by the individual's creditable coverage) following an individual's enrollment date. Employee *E* is hired by Employer *V* on October 13, 1998 and then on October 14, 1998 completes and files all the forms necessary to enroll in the plan. *E*'s coverage under the plan becomes effective on October 25, 1998 (which is the beginning of the first payroll period after *E*'s date of hire).

(ii) In this *Example,* E's enrollment date is October 13, 1998 (which is the first day of the waiting period for *E*'s enrollment and is also *E*'s date of hire). Accordingly, with respect to *E,* the 6-month period in paragraph (a)(1)(i) would be the period from April 13, 1998 through October 12, 1998, the maximum permissible period during which Employer *V*'s plan could apply a preexisting condition exclusion under paragraph (a)(1)(ii) would be in the period from October 13, 1998 through October 12, 1999, and this period would be reduced under paragraph (a)(1)(iii) by *E*'s days of creditable coverage as of October 13, 1998.

(iii) *Late enrollee* means an individual whose enrollment in a plan is a late enrollment.

(iv)(A) *Late enrollment* means enrollment under a group health plan other than on—

(*1*) The earliest date on which coverage can become effective under the terms of the plan; or

(*2*) A special enrollment date for the individual.

(B) If an individual ceases to be eligible for coverage under the plan by terminating employment, and then subsequently becomes eligible for coverage under the plan by resuming employment, only eligibility during the individual's most recent period of employment is taken into account in determining whether the individual is a late enrollee under the plan with respect to the most recent period of coverage. Similar rules apply if an individual again becomes eligible for coverage following a suspension of coverage that applied generally under the plan.

(v) *Examples.* The rules of this paragraph (a)(2) are illustrated by the following examples:

Example 1. (i) Employee *F* first becomes eligible to be covered by Employer *W's* group health plan on January 1, 1999, but elects not to enroll in the plan until April 1, 1999. April 1, 1999 is not a special enrollment date for *F.*

(ii) In this *Example 1, F* would be a late enrollee with respect to *F's* coverage that became effective under the plan on April 1, 1999.

Example 2. (i) Same as *Example 1,* except that *F* does not enroll in the plan on April 1, 1999 and terminates employment with Employer *W* on July 1, 1999, without having had any health insurance coverage under the plan. *F* is rehired by Employer *W* on January 1, 2000 and is eligible for and elects coverage under Employer *W's* plan effective on January 1, 2000.

(ii) In this *Example 2, F* would not be a late enrollee with respect to *F's* coverage that became effective on January 1, 2000.

(b) *Exceptions pertaining to preexisting condition exclusions—(1) Newborns*—(i) *In general.* Subject to

paragraph (b)(3) of this section, a group health plan, and a health insurance issuer offering group health insurance coverage, may not impose any preexisting condition exclusion with regard to a child who, as of the last day of the 30-day period beginning with the date of birth, is covered under any creditable coverage. Accordingly, if a newborn is enrolled in a group health plan (or other creditable coverage) within 30 days after birth and subsequently enrolls in another group health plan without a significant break in coverage, the other plan may not impose any preexisting condition exclusion with regard to the child.

(ii) *Example.* The rule of this paragraph (b)(1) is illustrated by the following example:

Example. (i) Seven months after enrollment in Employer *W's* group health plan, Individual *E* has a child born with a birth defect. Because the child is enrolled in Employer *W's* plan within 30 days of birth, no preexisting condition exclusion may be imposed with respect to the child under Employer *W's* plan. Three months after the child's birth, *E,* commences employment with Employer *X* and enrolls with the child in Employer *X's* plan 45 days after leaving Employer *W's* plan. Employer *X's* plan imposes a 12-month exclusion for any preexisting condition.

(ii) In this *Example,* Employer *X's* plan may not impose any preexisting condition exclusion with respect to *E's* child because the child was covered within 30 days of birth and had no significant break in coverage. This result applies regardless of whether *E's* child is included in the certificate of creditable coverage provided to *E* by Employer *W* indicating 300 days of dependent coverage or receives a separate certificate indicating 90 days of coverage. Employer *X's* plan may impose a preexisting condition exclusion with respect to *E* for up to 2 months for any preexisting condition of *E* for which medical advice, diagnosis, care, or treatment was recommended or received by *E* within the 6-month period ending on *E's* enrollment date in Employer *X's* plan.

(2) *Adopted children.* Subject to paragraph (b)(3) of this section, a group health plan, and a health insurance issuer offering group health insurance coverage, may not impose any preexisting condition exclusion in the case of a child who is adopted or placed for adoption before attaining 18 years of age and who, as of the last day of the 30-day period beginning on the date of the adoption or placement for adoption, is covered under creditable coverage. This rule does not apply to coverage before the date of such adoption or placement for adoption.

(3) *Break in coverage.* Paragraphs (b)(1) and (2) of this section no longer apply to a child after a significant break in coverage.

(4) *Pregnancy.* A group health plan, and a health insurance issuer offering group health insurance coverage, may not impose a preexisting condition exclusion relating to pregnancy as a preexisting condition.

(5) *Special enrollment dates.* For special enrollment dates relating to new dependents, see § 2590.701–6(b).

(c) *Notice of plan's preexisting condition exclusion.* A group health plan, and health insurance issuer offering group health insurance under the plan, may not impose a preexisting condition exclusion with respect to a participant or dependent of the participant before notifying the participant, in writing, of the existence and terms of any preexisting condition exclusion under the plan and of the rights of individuals to demonstrate creditable coverage (and any applicable waiting periods) as required by § 2590.701–5. The description of the rights of individuals to demonstrate creditable coverage includes a description of the right of the individual to request a certificate from a prior plan or issuer, if necessary, and a statement that the current plan or issuer will assist in obtaining a certificate from any prior plan or issuer, if necessary.

§ 2590.701–4 Rules relating to creditable coverage.

(a) *General rules*—

(1) *Creditable coverage.* For purposes of this section, except as provided in paragraph (a)(2) of this section, the term *creditable coverage* means coverage of an individual under any of the following:

(i) A group health plan as defined in § 2590.701–2.

(ii) Health insurance coverage as defined in § 2590.701–2 (whether or not the entity offering the coverage is subject to Part 7 of Subtitle B of Title I of the Act, and without regard to whether the coverage is offered in the group market, the individual market, or otherwise).

(iii) Part A or B of Title XVIII of the Social Security Act (Medicare).

(iv) Title XIX of the Social Security Act (Medicaid), other than coverage consisting solely of benefits under section 1928 of the Social Security Act (the program for distribution of pediatric vaccines).

(v) Title 10 U.S.C. Chapter 55 (medical and dental care for members and certain former members of the uniformed services, and for their dependents; for purposes of Title 10 U.S.C. Chapter 55, *uniformed services* means the armed forces and the Commissioned Corps of the National Oceanic and Atmospheric Administration and of the Public Health Service).

(vi) A medical care program of the Indian Health Service or of a tribal organization.

(vii) A State health benefits risk pool. For purposes of this section, a State health benefits risk pool means—

(A) An organization qualifying under section 501(c)(26) of the Code;

(B) A qualified high risk pool described in section 2744(c)(2) of the PHSA; or

(C) Any other arrangement sponsored by a State, the membership composition of which is specified by the State and which is established and maintained primarily to provide health insurance coverage for individuals who are residents of such State and who, by reason of the existence or history of a medical condition—

(*1*) Are unable to acquire medical care coverage for such condition through insurance or from an HMO, or

(*2*) Are able to acquire such coverage only at a rate which is substantially in excess of the rate for such coverage through the membership organization.

(viii) A health plan offered under Title 5 U.S.C. Chapter 89 (the Federal Employees Health Benefits Program).

(ix) A public health plan. For purposes of this section, a public health plan means any plan established or maintained by a State, county, or other political subdivision of a State that provides health insurance coverage to individuals who are enrolled in the plan.

(x) A health benefit plan under section 5(e) of the Peace Corps Act (22 U.S.C. 2504(e)).

(2) *Excluded coverage.* Creditable coverage does not include coverage consisting solely of coverage of excepted benefits (described in § 2590.732).

(3) *Methods of counting creditable coverage.* For purposes of reducing any preexisting condition exclusion period, as provided under § 2590.701–3(a)(1)(iii), a group health plan, and a health insurance issuer offering group health insurance coverage, determines the amount of an individual's creditable coverage by using the standard method described in paragraph (b) of this section, except that the plan, or issuer, may use the alternative method under paragraph (c) of this section with respect to any or all of the categories of benefits described under paragraph (c)(3) of this section.

(b) *Standard method*—(1) *Specific benefits not considered.* Under the standard method, a group health plan, and a health insurance issuer offering group health insurance coverage, determines the amount of creditable

coverage without regard to the specific benefits included in the coverage.

(2) *Counting creditable coverage*—(i) *Based on days.* For purposes of reducing the preexisting condition exclusion period, a group health plan, and a health insurance issuer offering group health insurance coverage, determines the amount of creditable coverage by counting all the days that the individual has under one or more types of creditable coverage. Accordingly, if on a particular day, an individual has creditable coverage from more than one source, all the creditable coverage on that day is counted as one day. Further, any days in a waiting period for a plan or policy are not creditable coverage under the plan or policy.

(ii) *Days not counted before significant break in coverage.* Days of creditable coverage that occur before a significant break in coverage are not required to be counted.

(iii) *Definition of significant break in coverage.* A significant break in coverage means a period of 63 consecutive days during all of which the individual does not have any creditable coverage, except that neither a waiting period nor an affiliation period is taken into account in determining a significant break in coverage. (See section 731(b)(2)(iii) of the Act and section 2723(b)(2)(iii) of the PHSA which exclude from preemption State insurance laws that require a break of more than 63 days before an individual has a significant break in coverage for purposes of State law.)

(iv) *Examples.* The following examples illustrate how creditable coverage is counted in reducing preexisting condition exclusion periods under this paragraph (b)(2):

Example 1. (i) Individual *A* works for Employer *P* and has creditable coverage under Employer *P*'s plan for 18 months before *A*'s employment terminates. *A* is hired by Employer *Q*, and enrolls in Employer *Q*'s group health plan, 64 days after the last date of coverage under Employer *P*'s plan. Employer *Q*'s plan has a 12-month preexisting condition exclusion period.

(ii) In this *Example 1,* because *A* had a break in coverage of 63 days, Employer *Q*'s plan may disregard *A*'s prior coverage and *A* may be subject to a 12-month preexisting condition exclusion period.

Example 2. (i) Same facts as *Example 1,* except that *A* is hired by Employer *Q*, and enrolls in Employer *Q*'s plan, on the 63rd day after the last date of coverage under Employer *P*'s plan.

(ii) In this *Example 2, A* has a break in coverage of 62 days. Because *A*'s break in coverage is not a significant break in coverage, Employer *Q*'s plan must count *A*'s prior creditable coverage for purposes of reducing the plan's preexisting condition exclusion period as it applies to *A*.

Example 3. (i) Same facts as *Example 1,* except that Employer *Q*'s plan provides benefits through an insurance policy that, as required by applicable State insurance laws, defines a significant break in coverage as 90 days.

(ii) In this *Example 3,* the issuer that provides group health insurance to Employer *Q*'s plan must count *A*'s period of creditable coverage prior to the 63-day break.

Example 4. (i) Same facts as *Example 3,* except that Employer *Q*'s plan is a self-insured plan, and, thus, is not subject to State insurance laws.

(ii) In this *Example 4,* the plan is not governed by the longer break rules under State insurance law and *A*'s previous coverage may be disregarded.

Example 5. (i) Individual *B* begins employment with Employer *R* 45 days after terminating coverage under a prior group health plan. Employer *R*'s plan has a 30-day waiting period before coverage begins. *B* enrolls in Employer *R*'s plan when first eligible.

(ii) In this *Example 5, B* does not have a significant break in coverage for purposes of determining whether *B*'s prior coverage must be counted by Employer *R*'s plan. *B* has only a 44-day break in coverage because the 30-day waiting period is not taken into account in determining a significant break in coverage.

Example 6, (i) Individual *C* works for Employer *S* and has creditable coverage under Employer *S*'s plan for 200 days before *C*'s employment is terminated and coverage ceases. *C* is then unemployed for 51 days before being hired by Employer *T*. Employer *T*'s plan has a 3-month waiting period. *C* works for Employer *T* for 2 months and then terminates employment. Eleven days after terminating employment with Employer *T, C* begins working for Employer *U*. Employer *U*'s plan has no waiting period, but has a 6-month preexisting condition exclusion period.

(ii) In this *Example 6, C* does not have a significant break in coverage because, after disregarding the waiting period under Employer *T*'s plan, *C* had only a 62-day break in coverage (51 days plus 11 days). Accordingly, C has 200 days of creditable coverage and Employer *U*'s plan may not apply its 6-month preexisting condition exclusion period with respect to *C*.

Example 7. (i) Individual *D* terminates employment with Employer *V* on January 13, 1998 after being covered for 24 months under Employer *V*'s group health plan. On March 17, the 63rd day without coverage, *D* applies for a health insurance policy in the individual market. *D*'s application is accepted and the coverage is made effective May 1.

(ii) In this *Example 7,* because *D* applied for the policy before the end of the 63rd day, and coverage under the policy ultimately became effective, the period between the date of application and the first day of coverage is a waiting period and no significant break in coverage occurred even though the actual period without coverage was 107 days.

Example 8. (i) Same facts as *Example 7,* except that *D*'s application for a policy in the individual market is denied.

(ii) In this *Example 8,* because *D* did not obtain coverage following application, *D* incurred a significant break in coverage on the 64th day.

(v) *Other permissible counting methods*—(A) *Rule.* Notwithstanding any other provisions of this paragraph (b)(2), for purposes of reducing a preexisting condition exclusion period (but not for purposes of issuing a certificate under § 2590.701–5), a group health plan, and a health insurance issuer offering group health insurance coverage, may determine the amount of creditable coverage in any other manner that is at least as favorable to the individual as the method set forth in this paragraph (b)(2), subject to the requirements of other applicable law.

(B) *Example.* The rule of this paragraph (b)(2)(v) is illustrated by the following example:

Example. (i) Individual *F* has coverage under group health plan *Y* from January 3, 1997 through March 25, 1997. *F* then becomes covered by group health plan *Z*. *F*'s enrollment date in Plan *Z* is May 1, 1997. Plan *Z* has a 12-month preexisting condition exclusion period.

(ii) In this *Example*, Plan *Z* may determine, in accordance with the rules prescribed in paragraph (b)(2) (i), (ii), and (iii) of this section, that *F* has 82 days of creditable coverage (29 days in January, 28 days in February, and 25 days in March). Thus, the preexisting condition exclusion period will no longer apply to *F* on February 8, 1998 (82 days before the 12-month anniversary of *F*'s enrollment (May 1)). For administrative convenience, however, Plan *Z* may consider that the preexisting condition exclusion period will no longer apply to *F* on the first day of the month (February 1).

(c) *Alternative method*—(1) *Specific benefits considered.* Under the alternative method, a group health plan, or a health insurance issuer offering group health insurance coverage, determines the amount of creditable coverage based on coverage within any category of benefits described in paragraph (c)(3) of this section and not based on coverage for any other benefits. The plan or issuer may use the alternative method for any or all of the categories. The plan may apply a different preexisting condition exclusion period with respect to each category (and may apply a different preexisting condition exclusion period for benefits that are not within any category). The creditable coverage determined for a category of benefits applies only for purposes of reducing the preexisting condition exclusion period with respect to that category. An individual's creditable coverage for benefits that are not within any category for which the alternative method is being used is determined under the

standard method of paragraph (b) of this section.

(2) *Uniform application.* A plan or issuer using the alternative method is required to apply it uniformly to all participants and beneficiaries under the plan or policy. The use of the alternative method is required to be set forth in the plan.

(3) *Categories of benefits.* The alternative method for counting creditable coverage may be used for coverage for the following categories of benefits—

(i) Mental health;

(ii) Substance abuse treatment;

(iii) Prescription drugs;

(iv) Dental care; or

(v) Vision care.

(4) *Plan notice.* If the alternative method is used, the plan is required to—

(i) State prominently that the plan is using the alternative method of counting creditable coverage in disclosure statements concerning the plan, and state this to each enrollee at the time of enrollment under the plan; and

(ii) Include in these statements a description of the effect of using the alternative method, including an identification of the categories used.

(5) *Disclosure of information on previous benefits.* See § 2590.701–5(b) for special rules concerning disclosure of coverage to a plan, or issuer, using the alternative method of counting creditable coverage under this paragraph (c).

(6) *Counting creditable coverage*—(i) *In general.* Under the alternative method, the group health plan or issuer counts creditable coverage within a category if any level of benefits is provided within the category. Coverage under a reimbursement account or arrangement, such as a flexible spending arrangement (as defined in section 106(c)(2) of the Internal Revenue Code), does not constitute coverage within any category.

(ii) *Special rules.* In counting an individual's creditable coverage under the alternative method, the group health plan, or issuer, first determines the amount of the individual's creditable coverage that may be counted under paragraph (b) of this section, up to a total of 365 days of the most recent creditable coverage (546 days for a late enrollee). The period over which this creditable coverage is determined is referred to as the determination period. Then, for the category specified under the alternative method, the plan or issuer counts within the category all days of coverage that occurred during the determination period (whether or not a significant break in coverage for that category occurs), and reduces the individual's preexisting condition exclusion period for that category by that number of days. The plan or issuer may determine the amount of creditable coverage in any other reasonable manner, uniformly applied, that is at least as favorable to the individual.

(iii) *Example.* The rules of this paragraph (c)(6) are illustrated by the following example:

Example. (i) Individual *D* enrolls in Employer *V*'s plan on January 1, 2001. Coverage under the plan includes prescription drug benefits. On April 1, 2001, the plan ceases providing prescription drug benefits. *D*'s employment with Employer *V* ends on January 1, 2002, after *D* was covered under Employer *V*'s group health plan for 365 days. *D* enrolls in Employer *Y*'s plan on February 1, 2002 (*D*'s enrollment date). Employer *Y*'s plan uses the alternative method of counting creditable coverage and imposes a 12-month preexisting condition exclusion on prescription drug benefits.

(ii) In this *Example,* Employer *Y*'s plan may impose a 275-day preexisting condition exclusion with respect to *D* for prescription drug benefits because *D* had 90 days of creditable coverage relating to prescription drug benefits within *D*'s determination period.

§ 2590.701–5 Certification and disclosure of previous coverage.

(a) *Certificate of creditable coverage*—(1) *Entities required to provide certificate*—(i) *In general.* A group health plan, and each health insurance issuer offering group health insurance coverage under a group health plan, is required to furnish certificates of creditable coverage in accordance with this paragraph (a) of this section.

(ii) *Duplicate certificates not required.* An entity required to provide a certificate under this paragraph (a)(1) for an individual is deemed to have satisfied the certification requirements for that individual if another party provides the certificate, but only to the extent that information relating to the individual's creditable coverage and waiting or affiliation period is provided by the other party. For example, in the case of a group health plan funded through an insurance policy, the issuer is deemed to have satisfied the certification requirement with respect to a participant or beneficiary if the plan actually provides a certificate that includes the information required under paragraph (a)(3) of this section with respect to the participant or beneficiary.

(iii) *Special rule for group health plans.* To the extent coverage under a plan consists of group health insurance coverage, the plan is deemed to have satisfied the certification requirements under this paragraph (a)(1) if any issuer offering the coverage is required to provide the certificates pursuant to an agreement between the plan and the issuer. For example, if there is an agreement between an issuer and the plan sponsor under which the issuer agrees to provide certificates for individuals covered under the plan, and the issuer fails to provide a certificate to an individual when the plan would have been required to provide one under this paragraph (a), then the issuer, but not the plan, violates the certification requirements of this paragraph (a).

(iv) *Special rules for issuers*—(A)(*1*) *Responsibility of issuer for coverage period.* An issuer is not required to provide information regarding coverage provided to an individual by another party.

(*2*) *Example.* The rule of this paragraph (a)(1)(iv)(A) is illustrated by the following example:

Example. (i) A plan offers coverage with an HMO option from one issuer and an indemnity option from a different issuer. The HMO has not entered into an agreement with the plan to provide certificates as permitted under paragraph (a)(1)(iii) of this section.

(ii) In this *Example,* if an employee switches from the indemnity option to the HMO option and later ceases to be covered under the plan, any certificate provided by the HMO is not required to provide information regarding the employee's coverage under the indemnity option.

(B)(*1*) *Cessation of issuer coverage prior to cessation of coverage under a plan.* If an individual's coverage under an issuer's policy ceases before the individual's coverage under the plan ceases, the issuer is required to provide sufficient information to the plan (or to another party designated by the plan) to enable a certificate to be provided by the plan (or other party), after cessation of the individual's coverage under the plan, that reflects the period of coverage under the policy. The provision of that information to the plan will satisfy the issuer's obligation to provide an automatic certificate for that period of creditable coverage for the individual under paragraph (a) (2)(ii) and (3) of this section. In addition, an issuer providing that information is required to cooperate with the plan in responding to any request made under paragraph (b)(2) of this section (relating to the alternative method of counting creditable coverage). If the individual's coverage under the plan ceases at the time the individual's coverage under the issuer's policy ceases, the issuer must provide an automatic certificate under paragraph (a)(2)(ii) of this section. An issuer may presume that an individual whose coverage ceases at a time other than the effective date for changing enrollment

options has ceased to be covered under the plan.

(*2*) *Example.* The rule of this paragraph (a)(1)(iv)(B) is illustrated by the following example.

Example. (i) A group health plan provides coverage under an HMO option and an indemnity option with a different issuer, and only allows employees to switch on each January 1. Neither the HMO nor the indemnity issuer has entered into an agreement with the plan to provide automatic certificates as permitted under paragraph (a)(2)(ii) of this section.

(ii) In this *Example,* if an employee switches from the indemnity option to the HMO option on January 1, the issuer must provide the plan (or a person designated by the plan) with appropriate information with respect to the individual's coverage with the indemnity issuer. However, if the individual's coverage with the indemnity issuer ceases at a date other than January 1, the issuer is instead required to provide the individual with an automatic certificate.

(2) *Individuals for whom certificate must be provided; timing of issuance*—(i) *Individuals.* A certificate must be provided, without charge, for participants or dependents who are or were covered under a group health plan upon the occurrence of any of the events described in paragraph (a)(2)(ii) or (iii) of this section.

(ii) *Issuance of automatic certificates.* The certificates described in this paragraph (a)(2)(ii) are referred to as automatic certificates.

(A) *Qualified beneficiaries upon a qualifying event.* In the case of an individual who is a qualified beneficiary (as defined in section 607(3) of the Act) entitled to elect COBRA continuation coverage, an automatic certificate is required to be provided at the time the individual would lose coverage under the plan in the absence of COBRA continuation coverage or alternative coverage elected instead of COBRA continuation coverage. A plan or issuer satisfies this requirement if it provides the automatic certificate no later than the time a notice is required to be furnished for a qualifying event under section 606 of the Act (relating to notices required under COBRA).

(B) *Other individuals when coverage ceases.* In the case of an individual who is not a qualified beneficiary entitled to elect COBRA continuation coverage, an automatic certificate is required to be provided at the time the individual ceases to be covered under the plan. A plan or issuer satisfies this requirement if it provides the automatic certificate within a reasonable time period thereafter. In the case of an individual who is entitled to elect to continue coverage under a State program similar to COBRA and who receives the automatic certificate not later than the time a notice is required to be furnished under the State program, the certificate is deemed to be provided within a reasonable time period after the cessation of coverage under the plan.

(C) *Qualified beneficiaries when COBRA ceases.* In the case of an individual who is a qualified beneficiary and has elected COBRA continuation coverage (or whose coverage has continued after the individual became entitled to elect COBRA continuation coverage), an automatic certificate is to be provided at the time the individual's coverage under the plan ceases. A plan, or issuer, satisfies this requirement if it provides the automatic certificate within a reasonable time after coverage ceases (or after the expiration of any grace period for nonpayment of premiums). An automatic certificate is required to be provided to such an individual regardless of whether the individual has previously received an automatic certificate under paragraph (a)(2)(ii)(A) of this section.

(iii) *Any individual upon request.* Requests for certificates are permitted to be made by, or on behalf of, an individual within 24 months after coverage ceases. Thus, for example, a plan in which an individual enrolls may, if authorized by the individual, request a certificate of the individual's creditable coverage on behalf of the individual from a plan in which the individual was formerly enrolled. After the request is received, a plan or issuer is required to provide the certificate by the earliest date that the plan or issuer, acting in a reasonable and prompt fashion, can provide the certificate. A certificate is required to be provided under this paragraph (a)(2)(iii) even if the individual has previously received a certificate under this paragraph (a)(2)(iii) or an automatic certificate under paragraph (a)(2)(ii) of this section.

(iv) *Examples.* The following examples illustrate the rules of this paragraph (a)(2):

Example 1. (i) Individual *A* terminates employment with Employer *Q*. *A* is a qualified beneficiary entitled to elect COBRA continuation coverage under Employer *Q*'s group health plan. A notice of the rights provided under COBRA is typically furnished to qualified beneficiaries under the plan within 10 days after a covered employee terminates employment.

(ii) In this *Example 1,* the automatic certificate may be provided at the same time that *A* is provided the COBRA notice.

Example 2. (i) Same facts as *Example 1,* except that the automatic certificate for *A* is not completed by the time the COBRA notice is furnished to *A*.

(ii) In this *Example 2,* the automatic certificate may be provided within the period permitted by law for the delivery of notices under COBRA.

Example 3. (i) Employer *R* maintains an insured group health plan. R has never had 20 employees and thus *R*'s plan is not subject to the COBRA continuation coverage provisions. However, *R* is in a State that has a State program similar to COBRA. *B* terminates employment with *R* and loses coverage under *R*'s plan.

(ii) In this *Example 3,* the automatic certificate may be provided not later than the time a notice is required to be furnished under the State program.

Example 4. (i) Individual *C* terminates employment with Employer *S* and receives both a notice of *C*'s rights under COBRA and an automatic certificate. *C* elects COBRA continuation coverage under Employer *S*'s group health plan. After four months of COBRA continuation coverage and the expiration of a 30-day grace period, *S*'s group health plan determines that *C*'s COBRA continuation coverage has ceased due to failure to make a timely payment for continuation coverage.

(ii) In this *Example 4,* the plan must provide an updated automatic certificate to *C* within a reasonable time after the end of the grace period.

Example 5. (i) Individual *D* is currently covered under the group health plan of Employer *T*. *D* requests a certificate, as permitted under paragraph (a)(2)(iii) of this section. Under the procedure for Employer *T*'s plan, certificates are mailed (by first class mail) 7 business days following receipt of the request. This date reflects the earliest date that the plan, acting in a reasonable and prompt fashion, can provide certificates.

(ii) In this *Example 5,* the plan's procedure satisfies paragraph (a)(2)(iii) of this section.

(3) *Form and content of certificate*—(i) *Written certificate*—(A) *In general.* Except as provided in paragraph (a)(3)(i)(B) of this section, the certificate must be provided in writing (including any form approved by the Secretary as a writing).

(B) *Other permissible forms.* No written certificate is required to be provided under this paragraph (a) with respect to a particular event described in paragraph (a)(2) (ii) or (iii) of this section, if—

(*1*) An individual is entitled to receive a certificate;

(*2*) The individual requests that the certificate be sent to another plan or issuer instead of to the individual;

(*3*) The plan or issuer that would otherwise receive the certificate agrees to accept the information in this paragraph (a)(3) through means other than a written certificate (e.g., by telephone); and

(*4*) The receiving plan or issuer receives such information from the sending plan or issuer in such form within the time periods required under paragraph (a)(2) of this section.

(ii) *Required information.* The certificate must include the following—

(A) The date the certificate is issued;

(B) The name of the group health plan that provided the coverage described in the certificate;

(C) The name of the participant or dependent with respect to whom the certificate applies, and any other information necessary for the plan providing the coverage specified in the certificate to identify the individual, such as the individual's identification number under the plan and the name of the participant if the certificate is for (or includes) a dependent;

(D) The name, address, and telephone number of the plan administrator or issuer required to provide the certificate;

(E) The telephone number to call for further information regarding the certificate (if different from paragraph (a)(3)(ii)(D) of this section);

(F) Either—

(*1*) A statement that an individual has at least 18 months (for this purpose, 546 days is deemed to be 18 months) of creditable coverage, disregarding days of creditable coverage before a significant break in coverage, or

(*2*) The date any waiting period (and affiliation period, if applicable) began and the date creditable coverage began; and

(G) The date creditable coverage ended, unless the certificate indicates that creditable coverage is continuing as of the date of the certificate.

(iii) *Periods of coverage under certificate.* If an automatic certificate is provided pursuant to paragraph (a)(2)(ii) of this section, the period that must be included on the certificate is the last period of continuous coverage ending on the date coverage ceased. If an individual requests a certificate pursuant to paragraph (a)(2)(iii) of this section, a certificate must be provided for each period of continuous coverage ending within the 24-month period ending on the date of the request (or continuing on the date of the request). A separate certificate may be provided for each such period of continuous coverage.

(iv) *Combining information for families.* A certificate may provide information with respect to both a participant and the participant's dependents if the information is identical for each individual or, if the information is not identical, certificates may be provided on one form if the form provides all the required information for each individual and separately states the information that is not identical.

(v) *Model certificate.* The requirements of paragraph (a)(3)(ii) of this section are satisfied if the plan or issuer provides a certificate in accordance with a model certificate authorized by the Secretary.

(vi) *Excepted benefits; categories of benefits.* No certificate is required to be furnished with respect to excepted benefits described in § 2590.732. In addition, the information in the certificate regarding coverage is not required to specify categories of benefits described in § 2590.701–4(c) (relating to the alternative method of counting creditable coverage). However, if excepted benefits are provided concurrently with other creditable coverage (so that the coverage does not consist solely of excepted benefits), information concerning the benefits may be required to be disclosed under paragraph (b) of this section.

(4) *Procedures*—(i) *Method of delivery.* The certificate is required to be provided to each individual described in paragraph (a)(2) of this section or an entity requesting the certificate on behalf of the individual. The certificate may be provided by first-class mail. If the certificate or certificates are provided to the participant and the participant's spouse at the participant's last known address, then the requirements of this paragraph (a)(4) are satisfied with respect to all individuals residing at that address. If a dependent's last known address is different than the participant's last known address, a separate certificate is required to be provided to the dependent at the dependent's last known address. If separate certificates are being provided by mail to individuals who reside at the same address, separate mailings of each certificate are not required.

(ii) *Procedure for requesting certificates.* A plan or issuer must establish a procedure for individuals to request and receive certificates pursuant to paragraph (a)(2)(iii) of this section.

(iii) *Designated recipients.* If an automatic certificate is required to be provided under paragraph (a)(2)(ii) of this section, and the individual entitled to receive the certificate designates another individual or entity to receive the certificate, the plan or issuer responsible for providing the certificate is permitted to provide the certificate to the designated party. If a certificate is required to be provided upon request under paragraph (a)(2)(iii) of this section and the individual entitled to receive the certificate designates another individual or entity to receive the certificate, the plan or issuer responsible for providing the certificate is required to provide the certificate to the designated party.

(5) *Special rules concerning dependent coverage*—(i)(A) *Reasonable efforts.* A plan or issuer is required to use reasonable efforts to determine any information needed for a certificate relating to the dependent coverage. In any case in which an automatic certificate is required to be furnished with respect to a dependent under paragraph (a)(2)(ii) of this section, no individual certificate is required to be furnished until the plan or issuer knows (or making reasonable efforts should know) of the dependent's cessation of coverage under the plan.

(B) *Example.* The rules of this paragraph (a)(5) are illustrated by the following example:

Example. (i) A group health plan covers employees and their dependents. The plan annually requests all employees to provide updated information regarding dependents, including the specific date on which an employee has a new dependent or on which a person ceases to be a dependent of the employee.

(ii) In this *Example,* the plan has satisfied the standard in this paragraph (a)(5)(i) of this section that it make reasonable efforts to determine the cessation of dependents' coverage and the related dependent coverage information.

(ii) *Special rules for demonstrating coverage.* If a certificate furnished by a plan or issuer does not provide the name of any dependent of an individual covered by the certificate, the individual may, if necessary, use the procedures described in paragraph (c)(4) of this section for demonstrating dependent status. In addition, an individual may, if necessary, use these procedures to demonstrate that a child was enrolled within 30 days of birth, adoption, or placement for adoption. See § 2590.701–3(b), under which such a child would not be subject to a preexisting condition exclusion.

(iii) *Transaction rule for dependent coverage through June 30, 1998*—(A) *In general.* A group health plan or health insurance issuer that cannot provide the names of dependents (or related coverage information) for purposes of providing a certificate of coverage for a dependent may satisfy the requirements of paragraph (a)(3)(ii)(C) of this section by providing the name of the participant covered by the group health plan or health insurance issuer and specifying that the type of coverage described in the certificate is for dependent coverage (e.g., family coverage or employee-plus-spouse coverage).

(B) *Certificates provided on request.* For purposes of certificates provided on the request of, or on behalf of, an individual pursuant to paragraph (a)(2)(iii) of this section, a plan or issuer

must make reasonable efforts to obtain and provide the names of any dependent covered by the certificate where such information is requested to be provided. If a certificate does not include the name of any dependent of an individual covered by the certificate, the individual may, if necessary, use the procedures described in paragraph (c) of this section for submitting documentation to establish that the creditable coverage in the certificate applies to the dependent.

(C) *Demonstrating a dependent's creditable coverage.* See paragraph (c)(4) of this section for special rules to demonstrate dependent status.

(D) *Duration.* This paragraph (a)(5)(iii) is only effective for certificates provided with respect to events occurring through June 30, 1998.

(6) *Special certification rules for entities not subject to Part 7 of Subtitle B of Title I of the Act*—(i) *Issuers.* For special rules requiring that issuers, not subject to part 7 of subtitle B of title I of the Act, provide certificates consistent with the rules in this section, including issuers offering coverage with respect to creditable coverage described in sections 701(c)(1)(G) through (c)(1)(J) of the Act (coverage under a State health benefits risk pool, the Federal Employees Health Benefits Program, a public health plan, and a health benefit plan under section 5(e) of the Peace Corps Act), see section 2721(b)(1)(B) of the PHSA (requiring certificates by issuers offering health insurance covering in connection with a group health plan, including a church plan or a governmental plan (including the Federal Employees Health Benefits Program (FEHBP)). In addition, see section 2743 of the PHSA applicable to health insurance issuers in the individual market. (However, this section does not require a certificate to be provided with respect to short-term limited duration insurance, as described in the definition of *individual health insurance coverage* in § 2590.701–2, that is not provided by a group health plan or issuer offering health insurance in connection with a group health plan.)

(ii) *Other entities.* For special rules requiring that certain other entities, not subject to part 7 of subtitle B of title I of the Act, provide certificates consistent with the rules in this section, see section 2791(a)(3) of the PHSA applicable to entities described in sections 2701(c)(1)(C), (D), (E), and (F) of PHSA (relating to Medicare, Medicaid, CHAMPUS, and Indian Health Service), section 2721(b)(1)(A) of the PHSA applicable to nonfederal governmental plans generally, section 2721(b)(2)(C)(ii) of the PHSA applicable to nonfederal governmental plans that elect to be excluded from the requirements of subparts 1 and 3 of part A of Title XXVII of the PHSA, and section 9805(a) of the Internal Revenue Code applicable to group health plans, which includes church plans (as defined in section 414(e) of the Internal Revenue Code).

(b) *Disclosure of coverage to a plan, or issuer, using the alternative method of counting creditable coverage*—(1) *In general.* If an individual enrolls in a group health plan with respect to which the plan, or issuer, uses the alternative method of counting creditable coverage described in § 2590.701–4(c) the individual provides a certificate of coverage under paragraph (a) of this section, and the plan or issuer in which the individual enrolls so requests, the entity that issued the certificate (the prior entity) is required to disclose promptly to a requesting plan or issuer (the requesting entity) the information set forth in paragraph (b)(2) of this section.

(2) *Information to be disclosed.* Information to be disclosed. The prior entity is required to identify to the requesting entity the categories of benefits with respect to which the requesting entity is using the alternative method of counting creditable coverage, and the requesting entity may identify specific information that the requesting entity reasonably needs in order to determine the individual's creditable coverage with respect to any such category. The prior entity is required to disclose promptly to the requesting entity the creditable coverage information so requested.

(3) *Charge for providing information.* The prior entity furnishing the information under paragraph (b) of this section may charge the requesting entity for the reasonable cost of disclosing such information.

(c) *Ability of an individual to demonstrate creditable coverage and waiting period information*—(1) *In general.* The rules in this paragraph (c) implement section 701(c)(4) of the Act, which permits individuals to establish creditable coverage through means other than certificates, and section 701(e)(3) of the Act, which requires the Secretary to establish rules designed to prevent an individual's subsequent coverage under a group health plan or health insurance coverage from being adversely affected by an entity's failure to provide a certificate with respect to that individual. If the accuracy of a certificate is contested or a certificate is unavailable when needed by the individual, the individual has the right to demonstrate creditable coverage (and waiting or affiliation periods) through the presentation of documents or other means. For example, the individual may make such a demonstration when—

(i) An entity has failed to provide a certificate within the required time period;

(ii) The individual has creditable coverage but an entity may not be required to provide a certificate of the coverage pursuant to paragraph (a) of this section;

(iii) The coverage is for a period before July 1, 1996;

(iv) The individual has an urgent medical condition that necessitates a determination before the individual can deliver a certificate to the plan; or

(v) The individual lost a certificate that the individual had previously received and is unable to obtain another certificate.

(2) *Evidence of creditable coverage*—(i) *Consideration of evidence.* A plan or issuer is required to take into account all information that it obtains or that is presented on behalf of an individual to make a determination, based on the relevant facts and circumstances, whether an individual has creditable coverage and is entitled to offset all or a portion of any preexisting condition exclusion period. A plan or issuer shall treat the individual as having furnished a certificate under paragraph (a) of this section if the individual attests to the period of creditable coverage, the individual also presents relevant corroborating evidence of some creditable coverage during the period, and the individual cooperates with the plan's or issuer's efforts to verify the individual's coverage. For this purpose, cooperation includes providing (upon the plan's or issuer's request) a written authorization for the plan or issuer to request a certificate on behalf of the individual, and cooperating in efforts to determine the validity of the corroborating evidence and the dates of creditable coverage. While a plan or issuer may refuse to credit coverage where the individual fails to cooperate with the plan's or issuer's efforts to verify coverage, the plan or issuer may not consider an individual's inability to obtain a certificate to be evidence of the absence of creditable coverage.

(ii) *Documents.* Documents that may establish creditable coverage (and waiting periods or affiliation periods) in the absence of a certificate include explanations of benefit claims (EOB) or other correspondence from a plan or issuer indicating coverage, pay stubs showing a payroll deduction for health coverage, a health insurance identification card, a certificate of coverage under a group health policy,

records from medical care providers indicating health coverage, third party statements verifying periods of coverage, and any other relevant documents that evidence periods of health coverage.

(iii) *Other evidence.* Creditable coverage (and waiting period or affiliation period information) may also be established through means other than documentation, such as by a telephone call from the plan or provider to a third party verifying creditable coverage.

(iv) *Example.* The rules of this paragraph (c)(2) are illustrated by the following example:

Example. (i) Individual *F* terminates employment with Employer *W* and, a month later, is hired by Employer *X*. Employer *X*'s group health plan imposes a preexisting condition exclusion of 12 months on new enrollees under the plan and uses the standard method of determining creditable coverage. *F* fails to receive a certificate of prior coverage from the self-insured group health plan maintained by *F*'s prior employer, Employer *W*, and requests a certificate. However, *F* (and Employer *X*'s plan, on *F*'s behalf) is unable to obtain a certificate from Employer *W*'s plan. *F* attests that, to the best of *F*'s knowledge, *F* had at least 12 months of continuous coverage under Employer *W*'s plan, and that the coverage ended no earlier than *F*'s termination of employment from Employer *W*. In addition, *F* presents evidence of coverage, such as an explanation of benefits for a claim that was made during the relevant period.

(ii) In this *Example*, based solely on these facts, *F* has demonstrated creditable coverage for the 12 months of coverage under Employer *W*'s plan in the same manner as if *F* had presented a written certificate of creditable coverage.

(3) *Demonstrating categories of creditable coverage.* Procedures similar to those described in this paragraph (c) apply in order to determine an individual's creditable coverage with respect to any category under paragraph (b) of this section (relating to determining creditable coverage under the alternative method).

(4) *Demonstrating dependent status.* If, in the course of providing evidence (including a certificate) of creditable coverage, an individual is required to demonstrate dependent status, the group health plan or issuer is required to treat the individual as having furnished a certificate showing the dependent status if the individual attests to such dependency and the period of such status and the individual cooperates with the plan's or issuer's efforts to verify the dependent status.

(d) *Determination and notification of creditable coverage*—(1) *Resonable time period.* In the event that a group health plan or health insurance issuer offering group health insurance coverage receives information under paragraph (a) of this section (certifications), paragraph (b) of this section (disclosure of information relating to the alternative method), or paragraph (c) of this section (other evidence of creditable coverage), the entity is required, within a reasonable time period following receipt of the information, to make a determination regarding the individual's period of creditable coverage and notify the individual of the determination in accordance with paragraph (d)(2) of this section. Whether a determination and notification regarding an individual's creditable coverage is made within a reasonable time period is determined based on the relevant facts and circumstances. Relevant facts and circumstances include whether a plan's application of a preexisting condition exclusion would prevent an individual from having access to urgent medical services.

(2) *Notification to individual of period of preexisting condition exclusion.* A plan or issuer seeking to impose a preexisting condition exclusion is required to disclose to the individual, in writing, its determination of any preexisting condition exclusion period that applies to the individual, and the basis for such determination, including the source and substance of any information on which the plan or issuer relied. In addition, the plan or issuer is required to provide the individual with a written explanation of any appeal procedures established by the plan or issuer, and with a reasonable opportunity to submit additional evidence of creditable coverage. However, nothing in this paragraph (d) or paragraph (c) of this section prevents a plan or issuer from modifying an initial determination of creditable coverage if it determines that the individual did not have the claimed creditable coverage, provided that—

(i) A notice of such reconsideration, as described in this paragraph (d), is provided to the individual; and

(ii) Until the final determination is made, the plan or issuer, for purposes of approving access to medical services (such as a pre-surgery authorization), acts in a manner consistent with the initial determination.

(3) *Examples.* The following examples illustrate this paragraph (d):

Example 1. (i) Individual *G* is hired by Employer *Y*. Employer *Y*'s group health plan imposes a preexisting condition exclusion for 12 months with respect to new enrollees and uses the standard method of determining creditable coverage. Employer *Y*'s plan determines that *G* is subject to a 4-month preexisting condition exclusion, based on a certificate of creditable coverage that is provided by *G* to Employer *Y*'s plan indicating 8 months of coverage under *G*'s prior group health plan.

(ii) In this *Example 1,* Employer *Y*'s plan must notify *G* within a reasonable period of time following receipt of the certificate that *G* is subject to a 4-month preexisting condition exclusion beginning on *G*'s enrollment date in *Y*'s plan.

Example 2. (i) Same facts as in *Example 1,* except that Employer *Y*'s plan determines that *G* has 14 months of creditable coverage based on *G*'s certificate indicating 14 months of creditable coverage under *G*'s prior plan.

(ii) In this *Example 2,* Employer *Y*'s plan is not required to notify *G* that *G* will not be subject to a preexisting condition exclusion.

Example 3. (i) Individual *H* is hired by Employer *Z*. Employer *Z*'s group health plan imposes a preexisting condition exclusion for 12 months with respect to new enrollees and uses the standard method of determining creditable coverage. *H* develops an urgent health condition before receiving a certificate of prior coverage. *H* attests to the period of prior coverage, presents corroborating documentation of the coverage period, and authorizes the plan to request a certificate on *H*'s behalf.

(ii) In this *Example 3*, Employer *Z*'s plan must review the evidence presented by *H*. In addition, the plan must make a determination and notify *H* regarding any preexisting condition exclusion period that applies to *H* (and the basis of such determination) within a reasonable time period following receipt of the evidence that is consistent with the urgency of *H*'s health condition (this determination may be modified as permitted under paragraph (d)(2) of this section).

§ 2590.701–6 Special enrollment periods.

(a) *Special enrollment for certain individuals who lose coverage*—(1) *In general.* A group health plan, and a health insurance issuer offering group health insurance coverage in connection with a group health plan, is required to permit employees and dependents described in paragraph (a) (2), (3), or (4) of this section to enroll for coverage under the terms of the plan if the conditions in paragraph (a)(5) of this section are satisfied and the enrollment is requested within the period described in paragraph (a)(6) of this section. The enrollment is effective at the time described in paragraph (a)(7) of this section. The special enrollment rights under this paragraph (a) apply without regard to the dates on which an individual would otherwise be able to enroll under the plan.

(2) *Special enrollment of an employee only.* An employee is described in this paragraph (a)(2) if the employee is eligible, but not enrolled, for coverage under the terms of the plan and, when enrollment was previously offered to the employee under the plan and was declined by the employee, the employee

was covered under another group health plan or had other health insurance coverage.

(3) *Special enrollment of dependents only.* A dependent is described in this paragraph (a)(3) if the dependent is a dependent of an employee participating in the plan, the dependent is eligible, but not enrolled, for coverage under the terms of the plan, and, when enrollment was previously offered under the plan and was declined, the dependent was covered under another group health plan or had other health insurance coverage.

(4) *Special enrollment of both employee and dependent.* An employee and any dependent of the employee are described in this paragraph (a)(4) if they are eligible, but not enrolled, for coverage under the terms of the plan and, when enrollment was previously offered to the employee or dependent under the plan and was declined, the employee or dependent was covered under another group health plan or had other health insurance coverage.

(5) *Conditions for special enrollment.* An employee or dependent is eligible to enroll during a special enrollment period if each of the following applicable conditions is met:

(i) When the employee declined enrollment for the employee or the dependent, the employee stated in writing that coverage under another group health plan or other health insurance coverage was the reason for declining enrollment. This paragraph (a)(5)(i) applies only if—

(A) The plan required such a statement when the employee declined enrollment; and

(B) The employee is provided with notice of the requirement to provide the statement in this paragraph (a)(5)(i) (and the consequences of the employee's failure to provide the statement) at the time the employee declined enrollment.

(ii)(A) When the employee declined enrollment for the employee or dependent under the plan, the employee or dependent had COBRA continuation coverage under another plan and COBRA continuation coverage under that other plan has since been exhausted; or

(B) If the other coverage that applied to the employee or dependent when enrollment was declined was not under a COBRA continuation provision, either the other coverage has been terminated as a result of loss of eligibility for the coverage or employer contributions towards the other coverage has been terminated. For this purpose, loss of eligibility for coverage includes a loss of coverage as a result of legal separation, divorce, death, termination of employment, reduction in the number of hours of employment, and any loss of eligibility after a period that is measured by reference to any of the foregoing. Thus, for example, if an employee's coverage ceases following a termination of employment and the employee is eligible for but fails to elect COBRA continuation coverage, this is treated as a loss of eligibility under this paragraph (a)(5)(ii)(B). However, loss of eligibility does not include a loss due to failure of the individual or the participant to pay premiums on a timely basis or termination of coverage for cause (such as making a fraudulent claim or an intentional misrepresentation of a material fact in connection with the plan). In addition, for purposes of this paragraph (a)(5)(ii)(B), employer contributions include contributions by any current or former employer (of the individual or another person) that was contributing to coverage for the individual.

(6) *Length of special enrollment period.* The employee is required to request enrollment (for the employee or the employee's dependent, as described in paragraph (a) (2), (3), or (4) of this section) not later than 30 days after the exhaustion of the other coverage described in paragraph (a)(5)(ii)(A) of this section or termination of the other coverage as a result of the loss of eligibility for the other coverage for items described in paragraph (a)(5)(ii)(B) of this section or following the termination of employer contributions toward that other coverage. The plan may impose the same requirements that apply to employees who are otherwise eligible under the plan to immediately request enrollment for coverage (e.g., that the request be made in writing).

(7) *Effective date of enrollment.* Enrollment is effective not later than the first day of the first calendar month beginning after the date the completed request for enrollment is received.

(b) *Special enrollment with respect to certain dependent beneficiaries*—(1) *In general.* A group health plan that makes coverage available with respect to dependents of a participant is required to provide a special enrollment period to permit individuals described in paragraph (b) (2), (3), (4), (5), or (6) of this section to be enrolled for coverage under the terms of the plan if the enrollment is requested within the time period described in paragraph (b)(7) of this section. The enrollment is effective at the time described in paragraph (b)(8) of this section. The special enrollment rights under this paragraph (b) apply without regard to the dates on which an individual would otherwise be able to enroll under the plan.

(2) *Special enrollment of an employee who is eligible but not enrolled.* An individual is described in this paragraph (b)(2) if the individual is an employee who is eligible, but not enrolled, in the plan, the individual would be a participant but for a prior election by the individual not to enroll in the plan during a previous enrollment period, and a person becomes a dependent of the individual through marriage, birth, or adoption or placement for adoption.

(3) *Specil enrollment of a spouse of a participant.* An individual is described in this paragraph (b)(3) if either—

(i) The individual becomes the spouse of a participant; or

(ii) The individual is a spouse of the participant and a child becomes a dependent of the participant through birth, adoption or placement for adoption.

(4) *Special enrollment of an employee who is eligible but not enrolled and the spouse of such employee.* An employee who is eligible, but not enrolled, in the plan, and an individual who is a dependent of such employee, are described in this paragraph (b)(4) if the employee would be a participant but for a prior election by the employee not to enroll in the plan during a previous enrollment period, and either—

(i) The employee and the individual become married; or

(ii) The employee and individual are married and a child becomes a dependent of the employee through birth, adoption or placement for adoption.

(5) *Special enrollment of a dependent of a participant.* An individual is described in this paragraph (b)(5) if the individual is a dependent of a participant and the individual becomes a dependent of such participant through marriage, birth, or adoption or placement for adoption.

(6) *Sepcial enrollment of an employee who is eligible but not enrolled and a new dependent.* An employee who is eligible, but not enrolled, in the plan, and an individual who is a dependent of the employee, are described in this paragraph (b)(6) if the employee would be a participant but for a prior election by the employee not to enroll in the plan during a previous enrollment period, and the dependent becomes a dependent of the employee through marriage, birth, or adoption or placement for adoption.

(7) *Length of special enrollment period.* The special enrollment period under paragraph (b)(1) of this section is a period of not less than 30 days and begins on the date of the marriage, birth, or adoption or placement for adoption

(except that such period does not begin earlier than the date the plan makes dependent coverage generally available).

(8) *Effective date of enrollment.* Enrollment is effective—

(i) In the case of marriage, not later than the first day of the first calendar month beginning after the date the completed request for enrollment is received by the plan;

(ii) In the case of a dependent's birth, the date of such birth; and

(iii) In the case of a dependent's adoption or placement for adoption, the date of such adoption or placement for adoption.

(9) *Example.* The rules of this paragraph (b) are illustrated by the following example:

Example. (i) Employee *A* is hired on September 3, 1998 by Employer *X*, which has a group health plan in which *A* can elect to enroll either for employee-only coverage, for employee-plus-spouse coverage, or for family coverage, effective on the first day of any calendar quarter thereafter. *A* is married and has no children. *A* does not elect to join Employer *X*'s plan (for employee-only coverage, employee-plus-spouse coverage, or family coverage) on October 1, 1998 or January 1, 1999. On February 15, 1999, a child is placed for adoption with *A* and *A*'s spouse.

(ii) In this *Example,* the conditions for special enrollment of an employee with a new dependent under paragraph (b)(2) of this section are satisfied, the conditions for special enrollment of an employee and a spouse with a new dependent under paragraph (b)(4) of this section are satisfied, and the conditions for special enrollment of an employee and a new dependent under paragraph (b)(6) of this section are satisfied. Accordingly, Employer *X*'s plan will satisfy this paragraph (b) if and only if it allows *A* to elect, by filing the required forms by March 16, 1999, to enroll in Employer *X*'s plan either with employee-only coverage, with employee-plus-spouse coverage, or with family coverage, effective as of February 15, 1999.

(c) *Notice of enrollment rights.* On or before the time an employee is offered the opportunity to enroll in a group health plan, the plan is required to provide the employee with a description of the plan's special enrollment rules under this section. For this purpose, the plan may use the following model description of the special enrollment rules under this section:

If you are declining enrollment for yourself or your dependents (including your spouse) because of other health insurance coverage, you may in the future be able to enroll yourself or your dependents in this plan, provided that you request enrollment within 30 days after your other coverage ends. In addition, if you have a new dependent as a result of marriage, birth, adoption, or placement for adoption, you may be able to enroll yourself and your dependents, provided that you request enrollment within 30 days after the marriage, birth, adoption, or placement for adoption.

(d)(1) *Special enrollment date definition.* A special enrollment date for an individual means any date in paragraph (a)(7) or (b)(8) of this section on which the individual has a right to have enrollment in a group health plan become effective under this section.

(2) *Examples.* The rules of this section are illustrated by the following examples:

Example 1. (i)(A) Employer *Y* maintains a group health plan that allows employees to enroll in the plan either—

(*1*) Effective on the first day of employment by an election filed within three days thereafter;

(*2*) Effective on any subsequent January 1 by an election made during the preceding months of November or December; or

(*3*) Effective as of any special enrollment date described in this section.

(B) Employee *B* is hired by Employer *Y* on March 15, 1998 and does not elect to enroll in Employer *Y*'s plan until January 31, 1999 when *B* loses coverage under another plan. *B* elects to enroll in Employer *Y*'s plan effective on February 1, 1999, by filing the completed request form by January 31, 1999, in accordance with the special rule set forth in paragraph (a) of this section.

(ii) In this *Example 1, B* has enrolled on a special enrollment date because the enrollment is effective at a date described in paragraph (a)(7) of this section.

Example 2. (i) Same facts as *Example 1,* except that *B*'s loss of coverage under the other plan occurs on December 31, 1998 and *B* elect to enroll in Employer *Y*'s plan effective on January 1, 1999 by filing the completed request form by December 31, 1998, in accordance with the special rule set forth in paragraph (a) of this section.

(ii) In this *Example 2, B* has enrolled on a special enrollment date because the enrollment is effective at a date described in paragraph (a)(7) of this section (even though this date is also a regular enrollment date under the plan).

§ 2590.701–7 HMO affiliation period as alternative to preexisting condition exclusion.

(a) *In general.* A group health plan offering health insurance coverage through an HMO, or an HMO that offers health insurance coverage in connection with a group health plan, may impose an affiliation period only if each of the requirements in paragraph (b) of this section is satisfied.

(b) *Requirements for affiliation period.* (1) No preexisting condition exclusion is imposed with respect to any coverage offered by the HMO in connection with the particular group health plan.

(2) No premium is charged to a participant or beneficiary for the affiliation period.

(3) The affiliation period for the HMO coverage is applied uniformly without regard to any health status-related factors.

(4) The affiliation period does not exceed 2 months (or 3 months in the case of a late enrollee).

(5) The affiliation period begins on the enrollment date.

(6) The affiliation period for enrollment in the HMO under a plan runs concurrently with any waiting period.

(c) *Alternatives to affiliation period.* An HMO may use alternative methods in lieu of an affiliation period to address adverse selection, as approved by the State insurance commissioner or other official designated to regulate HMOs. Nothing in the part requires a State to receive proposals for or approve alternatives to affiliation periods.

§ 2590.702 Prohibiting discrimination against participants and beneficiaries based on a health status-related factor.

(a) *In eligibility to enroll*—(1) *In general.* Subject to paragraph (a)(2) of this section, a group health plan, and a health insurance issuer offering group health insurance coverage in connection with a group health plan, may not establish rules for eligibility (including continued eligibility) of any individual to enroll under the terms of the plan based on any of the following health status-related factors in relation to the individual or a dependent of the individual.

(i) Health status.

(ii) Medical condition (including both physical and mental illnesses), as defined in § 2590.701–2.

(iii) Claims experience.

(iv) Receipt of health care.

(v) Medical history.

(vi) Genetic information, as defined in § 2590.701–2.

(vii) Evidence of insurability (including conditions arising out of acts of domestic violence).

(viii) Disability.

(2) *No application to benefits or exclusions.* To the extent consistent with section 701 of the Act and § 2590.701–3, paragraph (a)(1) of this section shall not be construed—

(i) To require a group health plan, or a health insurance issuer offering group health insurance coverage, to provide particular benefits other than those provided under the terms of such plan or coverage; or

(ii) To prevent such a plan or issuer from establishing limitation or restrictions on the amount, level, extent, or nature of the benefits or coverage for similarly situated individuals enrolled in the plan or coverage.

(3) *Construction.* For purposes of paragraph (a)(1) of this section, rules for eligibility to enroll include rule defining any applicable waiting (or affiliation) periods for such enrollment and rules relating to late and special enrollment.

(4) *Example.* The following example illustrates the rules of this paragraph (a):

Example. (i) An employer sponsors a group health plan that is available to all employees who enroll within the first 30 days of their employment. However, individuals who do not enroll in the first 30 days cannot enroll later unless they pass a physical examination.

(ii) In this *Example,* the plan discriminates on the basis of one or more health status-related factors.

(b) *In premiums or contributions*—(1) *In general.* A group health plan, and a health insurance issuer offering health insurance coverage in connection with a group health plan, may not require an individual (as a condition of enrollment or continued enrollment under the plan) to pay a premium or contribution that is greater than the premium or contribution for a similarly situated individual enrolled in the plan based on any health status-related factor, in relation to the individual or a dependent of the individual.

(2) *Construction.* Nothing in paragraph (b)(1) of this section shall be construed—

(i) To restrict the amount that an employer may be charged by an issuer for coverage under a group health plan; or

(ii) To prevent a group health plan, and a health insurance issuer offering group health insurance coverage, from establishing premium discounts or rebates or modifying otherwise applicable copayments or deductibles in return for adherence to a bona fide wellness program. For purposes of this section, a bona fide wellness program is a program of health promotion and disease prevention.

(3) *Example.* The rules of this paragraph (b) are illustrated by the following example:

Example. (i) Plan *X* offers a premium discount to participants who adhere to a cholesterol-reduction wellness program. Enrollees are expected to keep a diary of their food intake over 6 weeks. They periodically submit the diary to the plan physician who responds with suggested diet modifications. Enrollees are to modify their diets in accordance with the physician's recommendations. At the end of the 6 weeks, enrollees are given a cholesterol test and those who achieve a count under 200 receive a premium discount.

(ii) In this *Example,* because enrollees who otherwise comply with the program may be unable to achieve a cholesterol count under 200 due to a health status-related factor, this is not a bona fide wellness program and such discounts would discriminate impermissibly based on one or more health status-related factors. However, if, instead, individuals covered by the plan were entitled to receive the discount for complying with the diary and dietary requirements and were not required to pass a cholesterol test, the program would be a bona fide wellness program.

§ 2590.703 Guaranteed renewability in multiemployer plans and multiple employer welfare arrangements. [Reserved]

Subpart B—Other Requirements

§ 2590.711 Standard relating to benefits for mothers and newborns. [Reserved]

§ 2590.712 Parity in the application of certain limits to mental health benefits. [Reserved]

Subpart C—General Provisions

§ 2590.731 Preemption; State flexibility; construction.

(a) *Continued applicability of State law with respect to health insurance issuers.* Subject to paragraph (b) of this section and except as provided in paragraph (c) of this section, part 7 of subtitle B of title I of the Act is not to be construed to supersede any provision of State law which establishes, implements, or continues in effect any standard or requirement solely relating to health insurance issuers in connection with group health insurance coverage except to the extent that such standard or requirement prevents the application of a requirements of this part.

(b) *Continued preemption with respect to group health plans.* Nothing in part 7 of subtitle B of title I of the Act affects or modifies the provisions of section 514 of the Act with respect to group health plans.

(c) *Special rules*—(1) *In general.* Subject to paragraph (c)(2) of this section, the provisions of part 7 of subtitle B of title I of the Act relating to health insurance coverage offered by a health insurance issuer supersede any provision of State law which establishes, implements, or continues in effect a standard or requirement applicable to imposition of a preexisting condition exclusion specifically governed by section 701 which differs from the standards or requirements specified in such section.

(2) *Exceptions.* Only in relation to health insurance coverage offered by a health insurance issuer, the provisions of this part do not supersede any provision of State law to the extent that such provision—

(i) Shortens the period of time from the ''6-month period'' described in section 701(a)(1) of the Act and § 2590.701–3(a)(1)(i) (for purposes of identifying a preexisting condition);

(ii) Shortens the period of time from the ''12 months'' and ''18 months'' described in section 701(a)(2) of the Act and § 2590.701–3(a)(1)(ii) (for purposes of applying a preexisting condition exclusion period);

(iii) Provides for a greater number of days than the ''63 day period'' described in sections 701(c)(2)(A) and (d)(4)(A) of the Act and §§ 2590.701–3(a)(1)(iii) and 2590.701–4 (for purposes of applying the break in coverage rules);

(iv) Provides for a greater number of days than the ''30-day period'' described in sections 701 (b)(2) and (d)(1) of the Act and § 2590.701–3(b) (for purposes of the enrollment period and preexisting condition exclusion periods for certain newborns and children that are adopted or placed for adoption);

(v) Prohibits the imposition of any preexisting condition exclusion in cases not described in section 701(d) of the Act or expands the exceptions described therein;

(vi) Requires special enrollment periods in addition to those required under section 701(f) of the Act; or

(vii) Reduces the maximum period permitted in an affiliation period under section 701(g)(1)(B) of the Act.

(d) *Definitions*—(1) *State law.* For purposes of this § 2590.736 the term *State law* includes all laws, decisions, rules, regulations, or other State action having the effect of law, of any State. A law of the United States applicable only to the District of Columbia is treated as a State law rather an a law of the United States.

(2) *State.* For purposes of this section the term *State* includes a State, the Northern Mariana Islands, any political subdivisions of a State or such Island, or any agency or instrumentality of either.

§ 2590.732 Special rule relating to group health plans.

(a) *General exception for certain small group health plans.* The requirements of this part 7 of subtitle B of title I of the Act do not apply to any group health plan (and group health insurance coverage offered in connection with a group health plan) for any plan year if, on the first day of the plan year, the plan has fewer than 2 participants who are current employees.

(b) *Excepted benefits*—(1) *In general.* The requirements of subparts A and C of this part do not apply to any group health plan (or any group health insurance coverage offered in connection with a group health plan) in relation to its provision of the benefits

described in paragraph (b)(92), (3), (4), or (5) of this section (or any combination of these benefits).

(2) *Benefits excepted in all circumstances.* The following benefits are excepted in all circumstances—

(i) Coverage only for accident (including accidental death and dismemberment);

(ii) Disability income insurance;

(iii) Liability insurance, including general liability insurance and automobile liability insurance;

(iv) Coverage issued as a supplement to liability insurance;

(v) Workers' compensation or similar insurance;

(vi) Automobile medical payment insurance;

(vii) Credit-only insurance (for example, mortgage insurance); and

(viii) Coverage for on-site medical clinics.

(3) *Limited excepted benefits*—(i) *In general.* Limited-scope dental benefits, limited-scope vision benefits, or long-term care benefits are excepted if they are provided under a separate policy, certificate, or contract of insurance, or are otherwise not an integral part of the plan, as defined in paragraph (b)(3)(ii) of this section.

(ii) *Integral.* For purposes of paragraph (b)(3)(i) of this section, benefits are deemed to be an integral part of a plan unless a participant has the right to elect not to receive coverage for the benefits and, if the participant elects to receive coverage for the benefits, the participant pays an additional premium or contribution for that coverage.

(iii) *Limited scope.* Limited scope dental or vision benefits are dental or vision benefits that are sold under a separate policy or rider and that are limited in scope to a narrow range or type of benefits that are generally excluded from hospital/medical/surgical benefit packages.

(iv) *Long-term care.* Long-term care benefits are benefits that are either—

(A) Subject to State long-term care insurance laws;

(B) For qualified long-term care insurance services, as defined in section 7702B(c)(1) of the Code, or provided under a qualified long-term care insurance contract, as defined in section 7702B(b) of the Internal Revenue Code; or

(C) Based on cognitive impairment or a loss of functional capacity that is expected to be chronic.

(4) *Noncoordinated benefits*—(i) *Excepted benefits that are not coordinated.* Coverage for only a specified disease or illness (for example, cancer-only policies) or hospital indemnity or other fixed dollar indemnity insurance (for example, $100/day) is excepted only if it meets each of the conditions specified in paragraph (b)(4)(ii) of this section.

(ii) *Conditions.* Benefits are described in paragraph (b)(4)(i) of this section only if—

(A) The benefits are provided under a separate policy, certificate, or contract of insurance;

(B) There is no coordination between the provision of the benefits and an exclusion of benefits under any group health plan maintained by the same plan sponsor; and

(C) The benefits are paid with respect to an event without regard to whether benefits are provided with respect to the event under any group health plan maintained by the same plan sponsor.

(5) *Supplemental benefits.* The following benefits are excepted only if they are provided under a separate policy, certificate, or contract of insurance:

(i) Medicare supplemental health insurance (as defined under section 1882(g)(1) of the Social Security Act; also known as Medigap or MedSupp insurance);

(ii) Coverage supplemental to the coverage provided under Chapter 55, Title 10 of the United States Code (also known as CHAMPUS supplemental programs), and

(iii) Similar supplemental coverage provided to coverage under a group health plan.

(c) *Treatment of partnerships.* [Reserved]

§ 2590.734 Enforcement. [Reserved]

§ 2590.736 Effective dates.

(a) *General effective dates*—(1) *Non-collectively-bargained plans.* Except as otherwise provided in this section, part 7 of subtitle B of title I of the Act and subparts A and C of this part apply with respect to group health plans, including health insurance issuers offering health insurance coverage in connection with group health plans, for plan years beginning after June 30, 1997.

(2) *Collectively bargained plans.* Except as otherwise provided in this section (other than paragraph (a)(1) of this section), in the case of a group health plan maintained pursuant to one or more collective bargaining agreements between employee representatives and one or more employers ratified before August 21, 1996, Part 7 of subtitle B of title I of the Act and subparts A and C of this part do not apply to plan years beginning before the later of July 1, 1997, or the date on which the last of the collective bargaining agreements relating to the plan terminates (determined without regard to any extension thereof agreed to after August 21, 1996). For these purposes, any plan amendment made pursuant to a collective bargaining agreement relating to the plan, that amends the plan solely to conform to any requirement of such part, is not treated as a termination of the collective bargaining agreement.

(3)(i) *Preexisting condition exclusion periods for current employees.* Any preexisting condition exclusion period permitted under § 2590.701–3 is measured from the individual's enrollment date in the plan. Such exclusion period, as limited under § 2590.701–3, may be completed prior to the effective date of the Health Insurance Portability and Accountability Act of 1996 (HIPAA) for his or her plan. Therefore, on the date the individual's plan becomes subject to part 7 of subtitle B of title I of the Act, no preexisting condition exclusion may be imposed with respect to an individual beyond the limitation of § 2590.701–3. For an individual who has not completed the permitted exclusion period under HIPAA, upon the effective date for his or her plan, the individual may use creditable coverage that the individual had prior to the enrollment date to reduce the remaining preexisting condition exclusion period applicable to the individual.

(ii) *Examples.* The following examples illustrate the rules of this paragraph (a)(3):

Example 1. (i) Individual *A* has been working for Employer *X* and has been covered under Employer *X*'s plan since March 1, 1997. Under Employer *X*'s plan, as in effect before January 1, 1998, there is no coverage for any preexisting condition. Employer *X*'s plan year begins on January 1, 1998. *A*'s enrollment date in the plan is March 1, 1997 and *A* has no creditable coverage before this date.

(ii) In this *Example 1,* Employer *X* may continue to impose the preexisting condition exclusion under the plan through February 28, 1998 (the end of the 12-month period using anniversary dates).

Example 2. (i) Same facts as in *Example 1,* except that *A*'s enrollment date was August 1, 1996, instead of March 1, 1997.

(ii) In this *Example 2,* on January 1, 1998, Employer *X*'s plan may no longer exclude treatment for any preexisting condition that *A* may have; however, because Employer *X*'s plan is not subject to HIPAA until January 1, 1998, *A* is not entitled to claim reimbursement for expenses under the plan for treatments for any preexisting condition of *A* received before January 1, 1998.

(b) *Effective date for certification requirement*—(1) *In general.* Subject to the transitional rule in § 2590.701–5(a)(5)(iii), the certification rules of

§ 2590.701–5 apply to events occurring on or after July 1, 1996.

(2) *Period covered by certificate.* A certificate is not required to reflect coverage before July 1, 1996.

(3) *No certificate before June 1, 1997.* Notwithstanding any other provision of subpart A or C of this part, in no case is a certificate required to be provided before June 1, 1997.

(c) *Limitation on actions.* No enforcement action is to be taken, pursuant to part 7 of subtitle B of title I of the Act, against a group health plan or health insurance issuer with respect to a violation of a requirement imposed by part 7 of subtitle B of title I of the Act before January 1, 1998, if the plan or issuer has sought to comply in good faith with such requirements. Compliance with this part is deemed to be good faith compliance with the requirements of part 7 of subtitle B of title I of the Act.

(d) *Transition rules for counting creditable coverage.* An individual who seeks to establish creditable coverage for periods before July 1, 1996 is entitled to establish such coverage through the presentation of documents or other means in accordance with the provisions of § 2590.701–5(c). For coverage relating to an event occurring before July 1, 1996, a group health plan and a health insurance issuer is not subject to any penalty or enforcement action with respect to the plan's or issuer's counting (or not counting) such coverage if the plan or issuer has sought to comply in good faith with the applicable requirements under § 2590.701–5(c).

(e) *Transition rules for certificates of creditable coverage*—(1) *Certificates only upon request.* For events occurring on or after July 1, 1996, but before October 1, 1996, a certificate is required to be provided only upon a written request by or on behalf of the individual to whom the certificate applies.

(2) *Certificates before June 1, 1997.* For events occurring on or after October 1, 1996 and before June 1, 1997, a certificate must be furnished no later than June 1, 1997, or any later date permitted under § 2590.701–5(a)(2) (ii) and (iii).

(3) *Optional notice*—(i) *In general.* This paragraph (e)(3) applies with respect to events described in § 2590.701–5(a)(5)(ii), that occur on or after October 1, 1996 but before June 1, 1997. A group health plan or health insurance issuer offering group health coverage is deemed to satisfy § 2590.701–5(a) (2) and (3) if a notice is provided in accordance with the provisions of paragraphs (e)(3) (i) through (iv) of this section.

(ii) *Time of notice.* The notice must be provided no later than June 1, 1997.

(iii) *Form and content of notice.* A notice provided pursuant to this paragraph (e)(3) must be in writing and must include information substantially similar to the information included in a model notice authorized by the Secretary. Copies of the model notice are available on the following website—http://www.dol.gov/dol/pwba/ (or call 1–800–998–7542).

(iv) *Providing certificate after request.* If an individual requests a certificate following receipt of the notice, the certificate must be provided at the time of the request as set forth in § 2590.701–5(a)(5)(iii).

(v) *Other certification rules apply.* The rules set forth in § 2590.701–5(a)(4)(i) (method of delivery) and § 2590.701–5(a)(1) (entities required to provide a certificate) apply with respect to the provision of the notice.

Signed at Washington, D.C., this 27 day of March, 1997.

Olena Berg,

Assistant Secretary, Pension and Welfare Benefits Administration, U.S. Department of Labor.

Department of Health and Human Services

45 CFR Subtitle A

45 CFR is amended as set forth below:

1. The heading for subtitle A is revised to read as follows:

SUBTITLE A—DEPARTMENT OF HEALTH AND HUMAN SERVICES

2. Existing parts 1 through 100 are designated as subchapter A of subtitle A and a new subchapter heading is added to read as follows:

SUBCHAPTER A—GENERAL ADMINISTRATION

3. New subchapter B, consisting of parts 140 through 199, is added to read as follows:

SUBCHAPTER B—REQUIREMENTS RELATING TO HEALTH CARE ACCESS

PARTS 140—143 [RESERVED]

PART 144—REQUIREMENTS RELATING TO HEALTH INSURANCE COVERAGE

Subpart A—General Provisions

Sec.
144.101 Basis and purpose.
144.102 Scope and applicability.
144.103 Definitions applicable to both group (45 CFR Part 146) and individual (45 CFR Part 148) markets.

Subpart B—[Reserved]

Authority: Secs. 2701 through 2763, 2791, and 2792 of the Public Health Service Act, 42 U.S.C. 300gg through 300gg–63, 300gg–91, and 300gg–92.

PART 144—REQUIREMENTS RELATING TO HEALTH INSURANCE COVERAGE

Subpart A—General Provisions

§ 144.101 Basis and purpose.

Part 146 of this subchapter implements sections 2701 through 2723 of the Public Health Service Act (PHS Act, 42 U.S.C. 300gg, *et seq.*). Its purpose is to improve access to group health insurance coverage and to guarantee the renewability of all coverage in the group market. Part 148 of this subchapter implements sections 2741 through 2763 of the PHS Act. Its purpose is to improve access to individual health insurance coverage for certain eligible individuals who previously had group coverage, and to guarantee the renewability of all coverage in the individual market. Sections 2791 and 2792 of the PHS Act define terms used in the regulations in this subchapter and provide the basis for issuing these regulations, respectively.

§ 144.102 Scope and applicability.

(a) For purposes of 45 CFR parts 144 through 148, all health insurance coverage is generally divided into two markets—the group market (set forth in 45 CFR part 146) and the individual market (set forth in 45 CFR part 148). 45 CFR part 146 limits the group market to insurance sold to employment-related group health plans and further divides the group market into the large group market and the small group market. Federal law further defines the small group market as insurance sold to employer plans with 2 to 50 employees. State law, however, may expand the definition of the small group market to include certain coverage that would otherwise, under the Federal law, be considered coverage in the large group market or the individual market.

(b) The protections afforded under 45 CFR parts 144 through 148 to individuals and employers (and other sponsors of health insurance offered in connection with a group health plan) are determined by whether the coverage involved is obtained in the small group market, the large group market, or the individual market. Small employers, and individuals who are eligible to enroll under the employer's plan, are guaranteed availability of insurance coverage sold in the small group market. Small and large employers are guaranteed the right to renew their group coverage, subject to certain

exceptions. Eligible individuals are guaranteed availability of coverage sold in the individual market, and all coverage in the individual market must be guaranteed renewable.

(c) Coverage that is provided to associations, but is not related to employment, is not considered group coverage under 45 CFR parts 144 through 148. The coverage is considered coverage in the individual market, regardless of whether it is considered group coverage under State law.

§ 144.103 Definitions applicable to both group (45 CFR part 146) and individual (45 CFR part 148) markets.

Unless otherwise provided, the following definitions apply:

Affiliation period means a period of time that must expire before health insurance coverage provided by an HMO becomes effective, and during which the HMO is not required to provide benefits.

Applicable State authority means, with respect to a health insurance issuer in a State, the State insurance commissioner or official or officials designated by the State to enforce the requirements of 45 CFR parts 146 and 148 for the State involved with respect to the issuer.

Beneficiary has the meaning given the term under section 3(8) of the Employee Retirement Income Security Act of 1974 (ERISA), which states, ''a person designated by a participant, or by the terms of an employee benefit plan, who is or may become entitled to a benefit'' under the plan.

Bona fide association means, with respect to health insurance coverage offered in a State, an association that meets the following conditions:

(1) Has been actively in existence for at least 5 years.

(2) Has been formed and maintained in good faith for purposes other than obtaining insurance.

(3) Does not condition membership in the association on any health status-related factor relating to an individual (including an employee of an employer or a dependent of any employee).

(4) Makes health insurance coverage offered through the association available to all members regardless of any health status-related factor relating to the members (or individuals eligible for coverage through a member).

(5) Does not make health insurance coverage offered through the association available other than in connection with a member of the association.

(6) Meets any additional requirements that may be imposed under State law.

Church plan means a Church plan within the meaning of section 3(33) of ERISA.

COBRA definitions:

(1) *COBRA* means Title X of the Consolidated Omnibus Budget Reconciliation Act of 1985, as amended.

(2) *COBRA continuation coverage* means coverage, under a group health plan, that satisfies an applicable COBRA continuation provision.

(3) *COBRA continuation provision* means sections 601 through 608 of the Employee Retirement Income Security Act of 1974, section 4980B of the Internal Revenue Code of 1986 (other than paragraph (f)(1) of section 4980B insofar as it relates to pediatric vaccines), and Title XXII of the PHS Act.

(4) *Continuation coverage* means coverage under a COBRA continuation provision or a similar State program. Coverage provided by a plan that is subject to a COBRA continuation provision or similar State program, but that does not satisfy all the requirements of that provision or program, will be deemed to be continuation coverage if it allows an individual to elect to continue coverage for a period of at least 18 months. Continuation coverage does not include coverage under a conversion policy required to be offered to an individual upon exhaustion of continuation coverage, nor does it include continuation coverage under the Federal Employees Health Benefits Program.

(5) *Exhaustion of COBRA continuation coverage* means that an individual's COBRA continuation coverage ceases for any reason other than either failure of the individual to pay premiums on a timely basis, or for cause (such as making a fraudulent claim or an intentional misrepresentation of a material fact in connection with the plan). An individual is considered to have exhausted COBRA continuation coverage if such coverage ceases—

(i) Due to the failure of the employer or other responsible entity to remit premiums on a timely basis; or

(ii) When the individual no longer resides, lives, or works in a service area of an HMO or similar program (whether or not within the choice of the individual) and there is no other COBRA continuation coverage available to the individual.

(6) *Exhaustion of continuation coverage* means that an individual's continuation coverage ceases for any reason other than either failure of the individual to pay premiums on a timely basis, or for cause (such as making a fraudulent claim or an intentional misrepresentation of a material fact in connection with the plan). An individual is considered to have exhausted continuation coverage if—

(i) Coverage ceases due to the failure of the employer or other responsible entity to remit premiums on a timely basis, or

(ii) When the individual no longer resides, lives, or works in a service area of an HMO or similar program (whether or not within the choice of the individual) and there is no other continuation coverage available to the individual.

Condition means a medical condition.

Creditable coverage has the meaning of 45 CFR 146.113(a).

Eligible individual, for purposes of—

(1) The group market provisions in 45 CFR part 146, subpart E, the term is defined in 45 CFR 146.150(b); and

(2) The individual market provisions in 45 CFR part 148, the term is defined in 45 CFR 148.103.

Employee has the meaning given the term under section 3(6) of ERISA, which states, ''any individual employed by an employer.''

Employer has the meaning given the term under section 3(5) of ERISA, which states, ''any person acting directly as an employer, or indirectly in the interest of an employer, in relation to an employee benefit plan; and includes a group or association of employers acting for an employer in such capacity.''

Enroll means to become covered for benefits under a group health plan (that is, when coverage becomes effective), without regard to when the individual may have completed or filed any forms that are required in order to enroll in the plan. For this purpose, an individual who has health insurance coverage under a group health plan is enrolled in the plan regardless of whether the individual elects coverage, the individual is a dependent who becomes covered as a result of an election by a participant, or the individual becomes covered without an election.

Enrollment date definitions (*enrollment date* and *first day of coverage*) are set forth in 45 CFR 146.11(a)(2)(i) and (a)(2)(ii).

ERISA stands for the Employee Retirement Income Security Act of 1974, as amended (29 U.S.C. 1001 *et seq.*).

Excepted benefits for purposes of the—

(1) Group market provisions in 45 CFR part 146 subpart D, the term is defined in 45 CFR 146.145(b); and

(2) The individual market provisions in 45 CFR part 148, the term is defined in 45 CFR 148.220.

Federal government plan means a governmental plan established or maintained for its employees by the Government of the United States or by

any agency or instrumentality of such Government.

Genetic information means information about genes, gene products, and inherited characteristics that may derive from the individual or a family member. This includes information regarding carrier status and information derived from laboratory tests that identify mutations in specific genes or chromosomes, physical medical examinations, family histories, and direct analysis of genes or chromosomes.

Governmental plan means a governmental plan within the meaning of section 3(32) of ERISA.

Group health insurance coverage means health insurance coverage offered in connection with a group health plan.

Group health plan means an employee welfare benefit plan (as defined in section 3(1) of ERISA) to the extent that the plan provides medical care (as defined in section 2791(a)(2) of the PHS Act and including items and services paid for as medical care) to employees or their dependents (as defined under the terms of the plan) directly or through insurance, reimbursement, or otherwise.

Group market means the market for health insurance coverage offered in connection with a group health plan. (However, unless otherwise provided under State law, certain very small plans may be treated as being in the individual market, rather than the group market; see the definition of ''individual market'' in this section.)

Health insurance coverage means benefits consisting of medical care (provided directly, through insurance or reimbursement, or otherwise) under any hospital or medical service policy or certificate, hospital or medical service plan contract, or HMO contract offered by a health insurance issuer.

Health insurance issuer or *issuer* means an insurance company, insurance service, or insurance organization (including an HMO) that is required to be licensed to engage in the business of insurance in a State and that is subject to State law that regulates insurance (within the meaning of section 514(b)(2) of ERISA). This term does not include a group health plan.

Health maintenance organization or *HMO* means—

(1) A Federally qualified health maintenance organization (as defined in section 1301(a) of the PHS Act);

(2) An organization recognized under State law as a health maintenance organization; or

(3) A similar organization regulated under State law for solvency in the same manner and to the same extent as such a health maintenance organization.

Health status-related factor means health status, medical condition (including both physical and mental illnesses), claims experience, receipt of health care, medical history, genetic information, evidence of insurability (including conditions arising out of acts of domestic violence) and disability.

Individual health insurance coverage means health insurance coverage offered to individuals in the individual market, but does not include short-term, limited-duration insurance. Individual health insurance coverage can include dependent coverage.

Indiviual market means the market for health insurance coverage offered to individuals other than in connection with a group health plan. Unless a State elects otherwise in accordance with section 2791(e)(1)(B)(ii) of the PHS Act, such term also includes coverage offered in connection with a group health plan that has fewer than two participants as current employees on the first day of the plan year.

Internal Revenue Code (Code) means the Internal Revenue Code of 1986, as amended (Title 26, United States Code).

Issuer means a health insurance issuer.

Large employer means, in connection with a group health plan with respect to a calendar year and a plan year, an employer who employed an average of at least 51 employees on business days during the preceding calendar year and who employs at least 2 employees on the first day of the plan year, unless otherwise provided under State law.

Large group market means the health insurance market under which individuals obtain health insurance coverage (directly or through any arrangement) on behalf of themselves (and their dependents) through a group health plan maintained by a large employer, unless otherwise provided under State law.

Late enrollment definitions (*late enrollee* and *late enrollment*) are set forth in 45 CFR 146.111 (a)(2)(iii) and (a)(2)(iv).

Medical care or *condition* means amounts paid for any of the following:

(1) The diagnosis, cure, mitigation, or prevention of disease, or amounts paid for the purpose of affecting any structure or function of the body.

(2) Transportation primarily for and essential to medical care referred to in paragraph (1) of this definition.

(3) Insurance covering medical care referred to in paragraphs (1) and (2) of this definition.

Medical condition means any condition, whether physical or mental, including, but not limited to, any condition resulting from illness, injury (whether or not the injury is accidental), pregnancy, or congenital malformation. However, genetic information is not a condition.

NAIC stands for the National Association of Insurance Commissioners.

Network plan means health insurance coverage of a health insurance issuer under which the financing and delivery of medical care (including items and services paid for as medical care) are provided, in whole or in part, through a defined set of providers under contract with the issuer.

Non-Federal governmental plan means a governmental plan that is not a Federal government plan.

Participant has the meaning given the term under section 3(7) of ERISA, which states, ''any employee or former employee of an employer, or any member or former member of an employee organization, who is or may become eligible to receive a benefit of any type from an employee benefit plan which covers employees of such employer or members of such organization, or whose beneficiaries may be eligible to receive any such benefit.''

PHS Act stands for the Public Health Service Act.

Placement, or being placed, for adoption means the assumption and retention of a legal obligation for total or partial support of a child by a person with whom the child has been placed in anticipation of the child's adoption. The child's placement for adoption with the person terminates upon the termination of the legal obligation.

Plan sponsor has the meaning given the term under section 3(16)(B) of ERISA, which states ''(i) the employer in the case of an employee benefit plan established or maintained by a single employer, (ii) the employee organization in the case of a plan established or maintained by an employee organization, or (iii) in the case of a plan established or maintained by two or more employers or jointly by one or more employers and one or more employee organizations, the association, committee, joint board of trustees, or other similar group of representatives of the parties who establish or maintain the plan.''

Plan year means the year that is designated as the plan year in the plan document of a group health plan, except that if the plan document does not designate a plan year or if there is no plan document, the plan year is:

(1) THe deductible/limit year used under the plan.

(2) If the plan does not impose deductibles or limits on a yearly basis, the plan year is the policy year.

(3) If the plan does not impose deductibles or limits on a yearly basis, and either the plan is not insured or the insurance policy is not renewed on an annual basis, the plan year is the employer's taxable year.

(4) In any other case, the plan year is the calendar year.

Preexisting condition exclusion means a limitation or exclusion of benefits relating to a condition based on the fact that the condition was present before the first day of coverage, whether or not any medical advice, diagnosis, care, or treatment was recommended or received before that day. A preexisting condition exclusion includes any inclusion applicable to an individual as a result of information that is obtained relating to an individual's health status before the individual's first day of coverage, such as a condition identified as a result of a pre-enrollment questionnaire or physical examination given to the individual, or review of medical records relating to the pre-enrollment period.

Public health plan means ''public health plan'' within the meaning of 45 CFR 146.113(a)(1)(ix).

Short-term limited duration insurance means health insurance coverage provided under a contract with an issuer that has an expiration date specified in the contract (taking into account any extensions that may be elected by the policyholder without the issuer's consent) that is within 12 months of the date the contract becomes effective.

Significant break in coverage has the meaning given the term in 45 CFR 146.113(b)(2)(iii).

Small employer means, in connection with a group health plan with respect to a calendar year and a plan year, an employer who employed an average of at least 2 but not more than 50 employees on business days during the preceding calendar year and who employs at least 2 employees on the first day of the plan year, unless otherwise provided under State law.

Small group market means the health insurance market under which individuals obtain health insurance coverage (directly or through any arrangement) on behalf of themselves (and their dependents) through a group health plan maintained by a small employer.

Special enrollment date has the meaning given the term in 45 CFR 146.117(d).

State means each of the several States, the District of Columbia, Puerto Rico, the Virgin Islands, Guam, American Samoa, and the Northern Mariana Islands.

State health benefits risk pool means a ''State health benefits risk pool'' within the meaning of 45 CFR 146.113(a)(1)(vii).

Waiting period means the period that must pass before an employee or dependent is eligible to enroll under the terms of a group health plan. If an employee or dependent enrolls as a late enrollee or on a special enrollment date, any period before such late or special enrollment is not a waiting period. If an individual seeks and obtains coverage in the individual market, any period after the date the individual files a substantially complete application for coverage and before the first day of coverage is a waiting period.

Subpart B—[Reserved]

PART 145—[RESERVED]

PART 146—REQUIREMENTS FOR THE GROUP HEALTH INSURANCE MARKET

Subpart A—General Provisions

Sec.
146.101 Basis and scope.

Subpart B—Requirements Relating to Access and Renewability of Coverage, and Limitations on Preexisting Condition Exclusion Periods

Sec.
146.111 Limitations on preexisting condition exclusion period.
146.113 Rules relating to creditable coverage.
146.115 Certification and disclosure of previous coverage.
146.117 Special enrollment periods.
146.119 HMO affiliation period as alternative to preexisting condition exclusion.
146.121 Prohibiting discrimination against participants and beneficiaries based on health status-related factors.
146.125 Effective dates.

Subpart C—[Reserved]

Subpart D—Preemption and Special Rules

Sec.
146.143 Preemption; State flexibility; construction.
146.145 Special rules relating to group health plans.

Subpart E—Provisions Applicable to Only Health Insurance Issuers

Sec.
146.150 Guaranteed availability of coverage for employers in the small group market.
146.152 Guaranteed renewability of coverage for employers in the group market.
146.160 Disclosure of information.

Subpart F—Exclusion of Plans and Enforcement

Sec.
146.180 Treatment of non-Federal governmental plans.
146.184 Enforcement.

Authority: Secs. 2701 through 2763, 2791, and 2792 of the PHS Act, 42 U.S.C. 300gg through 300gg–63, 300gg–91, and 300gg–92.

PART 146—REQUIREMENTS FOR THE GROUP HEALTH INSURANCE MARKET

Subpart A—General Provisions

§ 146.101 Basis and scope.

(a) *Statutory basis.* This part implements sections 2701 through 2723 of the PHS Act. Its purpose is to improve access to group health insurance coverage and to guarantee the renewability of all coverage in the group market. Sections 2791 and 2792 of the PHS Act define terms used in the regulations in this subchapter and provide the basis for issuing these regulations, respectively.

(b) *Scope.* A group health plan or health insurance issuer offering group health insurance coverage may provide greater rights to participants and beneficiaries than those set forth in this part.

(1) *Subpart B.* Subpart B of this part sets forth minimum requirements for group health plans and health insurance issuers offering group health insurance coverage concerning:

(i) Limitations on a preexisting condition exclusion period.

(ii) Certificates and disclosure of previous coverage.

(iii) Methods of counting creditable coverage.

(iv) Special enrollment periods.

(v) Use of an affiliation period by an HMO as an alternative to a preexisting condition exclusion.

(2) *Subpart D.* Subpart D of this part sets forth exceptions to the requirements of Subpart B for certain plans and certain types of benefits.

(3) *Subpart E.* Subpart E of this part implements sections 2711 through 2713 of the PHS Act, which set forth requirements that apply only to health insurance issuers offering health insurance coverage, in connection with a group health plan.

(4) *Subpart F.* Subpart F of this part addresses the treatment of non-Federal governmental plans, and sets forth enforcement procedures.

Subpart B—Requirements Relating to Access and Renewability of Coverage, and Limitations on Preexisting Condition Exclusion Periods

§ 146.111 Limitations on preexisting condition exclusion period.

(a) *Preexisting condition exclusion*—(1) *General.* Subject to paragraph (b) of this section, a group health plan, and a health insurance issuer offering group health insurance coverage, may impose, with respect to a participant or beneficiary, a preexisting condition exclusion only if the requirements of this paragraph (a) are satisfied.

(1) *6-month look-back rule.* A preexisting condition exclusion must relate to a condition (whether physical or mental), regardless of the cause of the condition, for which medical advice, diagnosis, care, or treatment was recommended or received within the 6-month period ending on the enrollment date.

(A) For purposes of this paragraph (a)(1)(i), medical advice, diagnosis, care, or treatment is taken into account only if it is recommended by, or received from, an individual licensed or similarly authorized to provide such services under State law and operating within the scope of practice authorized by State law.

(B) For purposes of this paragraph (a)(1)(i), the 6-month period ending on the enrollment date begins on the 6-month anniversary date preceding the enrollment date. For example, for an enrollment date of August 1, 1998, the 6-month period preceding the enrollment date is the period commencing on February 1, 1998 and continuing through July 31, 1998. As another example, for an enrollment date of August 30, 1998, the 6-month period preceding the enrollment date is the period commencing on February 28, 1998 and continuing through August 29, 1998.

(C) The following examples illustrate the requirements of this paragraph (a)(1)(i).

Example 1: (i) Individual *A* is treated for a medical condition 7 months before the enrollment date in Employer *R*'s group health plan. As part of such treatment, *A*'s physician recommends that a follow-up examination be given 2 months later. Despite this recommendation, *A* does not receive a follow-up examination and no other medical advice, diagnosis, care, or treatment for that condition is recommended to *A* or received by *A* during the 6-month period ending on *A*'s enrollment date in Employer *R*'s plan.

(ii) In this *Example,* Employer *R*'s plan may not impose a preexisting condition exclusion period with respect to the condition for which *A* received treatment 7 months prior to the enrollment date.

Example 2: (i) Same facts as *Example 1* except that Employer *R*'s plan learns of the condition and attaches a rider to *A*'s policy excluding coverage for the condition. Three months after enrollment, *A*'s condition recurs, and Employer *R*'s plan denies payment under the rider.

(ii) In this *Example,* the rider is a preexisting condition exclusion and Employer *R*'s plan may not impose a preexisting condition exclusion with respect to the condition for which *A* received treatment 7 months prior to the enrollment date.

Example 3: (i) Individual *B* has asthma and is treated for that condition several times during the 6-month period before *B*'s enrollment date in Employer *S*'s plan. The plan imposes a 12-month preexisting condition exclusion. *B* has no prior creditable coverage to reduce the exclusion period. Three months after the enrollment date, *B* begins coverage under Employer *S*'s plan. *B* is hospitalized for asthma.

(ii) In this *Example,* Employer *S*'s plan may exclude payment for the hospital stay and the physician services associated with this of illness because the care is related to a medical condition for which treatment was received by *B* during the 6-month period before the enrollment date.

Example 4: (i) Individual *D,* who is subject to a preexisting condition exclusion imposed by Employer *U*'s plan, has diabetes, as well as a foot condition caused by poor circulation and retinal degeneration (both of which are conditions that may be directly attributed to diabetes). After enrolling in the plan, *D* stumbles and breaks a leg.

(ii) In this *Example,* the leg fracture is not a condition related to *D*'s diabetes, even though poor circulation in *D*'s extremities and poor vision may have contributed towards the accident. However, any additional medical services that may be needed because of *D*'s preexisting diabetic condition that would not be needed by another patient with a broken leg who does not have diabetes may be subject to the preexisting condition exclusion imposed under Employer *U*'s plan.

(ii) *Maximum length of preexisting condition exclusion (the look-forward rule).* A preexisting condition exclusion is not permitted to extend for more than 12 months (18 months in the case of a late enrollee) after the enrollment date. For purposes of this paragraph (a)(1)(ii), the 12-month and 18-month periods after the enrollment date are determined by reference to the anniversary of the enrollment date. For example, for an enrollment date of August 1, 1998, the 12-month period after the enrollment date is the period commencing on August 1, 1998 and continuing through July 31, 1999.

(iii) *Reducing a preexisting condition exclusion period by creditable coverage.* The period of any preexisting condition exclusion that would otherwise apply to an individual under a group health plan is reduced by the number of days of creditable coverage the individual has as of the enrollment date, as counted under § 146.113. For purposes of this part, the phrase ''days of creditable coverage'' has the same meaning as the phrase ''the aggregate of the periods of creditable coverage'' as such term is used in section 2701(a)(3) of the PHS Act.

(iv) *Other standards.* See § 146.121 for other standards that may apply with respect to certain benefit limitations or restrictions under a group health plan.

(2) *Enrollment definitions*—(i) *Enrollment date* means the first day of coverage or, if there is a waiting period, the first day of the waiting period.

(ii) (A) *First day of coverage* means, in the case of an individual covered for benefits under a group health plan in the group market, the first day of coverage under the plan and, in the case of an individual covered by health insurance coverage in the individual market, the first day of coverage under the policy.

(B) *Example.* The following example illustrates the requirements of paragraph (a)(2)(ii)(A) of this section:

Example: (i) Employer *V*'s group health plan provides for coverage to begin on the first day of the first payroll period following the date an employee is hired and completes the applicable enrollment forms, or on any subsequent January 1 after completion of the applicable enrollment forms. Employer *V*'s plan imposes a preexisting condition exclusion for 12 months (reduced by the individual's creditable coverage) following an individual's enrollment date. Employee *E* is hired by Employer *V* on October 13, 1998 and then on October 14, 1998 completes and files all the forms necessary to enroll in the plan. *E*'s coverage under the plan becomes effective on October 25, 1998 (which is the beginning of the first payroll period after *E*'s date of hire).

(ii) In this *Example, E*'s enrollment date is October 13, 1998 (which is the first day of the waiting period for *E*'s enrollment and is also *E*'s date of hire). Accordingly, with respect to *E,* the 6-month period in paragraph (a)(1)(i) would be the period from April 13, 1998 through October 12, 1998, the maximum permissible period during which Employer *V*'s plan could apply a preexisting condition exclusion under paragraph (a)(1)(ii) would be the period from October 13, 1998 through October 12, 1999, and this period would be reduced under paragraph (a)(1)(iii) by *E*'s days of creditable coverage as of October 13, 1998.

(iii) *Late enrollee* means an individual whose enrollment in a plan is a late enrollment.

(iv) *Late enrollment* means enrollment under a group health plan other than on—

(A) The earliest date on which coverage can become effective under the terms of the plan; or

(B) A special enrollment date for the individual. If an individual ceases to be eligible for coverage under the plan by terminating employment, and subsequently becomes eligible for coverage under the plan by resuming employment, only eligibility during the individual's most recent period of employment is taken into account in determining whether the individual is a late enrollee under the plan with respect to the most recent period of coverage. Similar rules apply if an individual again becomes eligible for coverage following a suspension of coverage that applied generally under the plan.

(v) *Examples.* The following examples illustrate the requirements of this paragraph (a)(2):

Example 1: (i) Employee *F* first becomes eligible to be covered by Employer *W*'s group health plan on January 1, 1999, but elects not to enroll in the plan until April 1, 1999. April 1, 1999 is not a special enrollment date for *F*.

(ii) In this *Example, F* would be a late enrollee with respect to *F*'s coverage that became effective under the plan on April 1, 1999.

Example 2: (i) Same as *Example 1,* except that *F* does not enroll in the plan on April 1, 1999 and terminates employment with Employer *W* on July 1, 1999, without having had any health insurance coverage under the plan. *F* is rehired by Employer *W* on January 1, 2000 and is eligible for and elects coverage under Employer *W*'s plan effective on January 1, 2000.

(ii) In this *Example, F* would not be a late enrollee with respect to *F*'s coverage that became effective on January 1, 2000.

(b) *Exceptions pertaining to preexisting condition exclusions*—(1) *Newborns*—(i) *General rule.* Subject to paragraph (b)(3) of this section, a group health plan, and a health insurance issuer offering group health insurance coverage, may not impose any preexisting condition exclusion with regard to a child who, as of the last day of the 30-day period beginning with the date of birth, is covered under any creditable coverage. Accordingly, if a newborn is enrolled in a group health plan (or other creditable coverage) within 30 days after birth and subsequently enrolls in another group health plan without a significant break in coverage, the other plan may not impose any preexisting condition exclusion with regard to the child.

(ii) *Example.* The following example illustrates the requirements of this paragraph (b)(1).

Example: (i) Seven months after enrollment in Employer *W*'s group health plan, Individual *E* has a child born with a birth defect. Because the child is enrolled in Employer *W*'s plan within 30 days of birth, no preexisting condition exclusion may be imposed with respect to the child under Employer *W*'s plan. Three months after the child's birth, *E* commences employment with Employer *X* and enrolls with the child in Employer *X*'s plan within 45 days of leaving Employer *W*'s plan. Employer *X*'s plan imposes a 12-month exclusion for any preexisting condition.

(ii) In this *Example,* Employer *X*'s plan may not impose any preexisting condition exclusion with respect to *E*'s child because the child was covered within 30 days of birth and had no significant break in coverage. This result applies regardless of whether *E*'s child is included in the certificate of creditable coverage provided to *E* by Employer *W* indicating 300 days of dependent coverage or receives a separate certificate indicating 90 days of coverage. Employer *X*'s plan may impose a preexisting condition exclusion with respect to *E* for up to 2 months for any preexisting condition of *E* for which medical advice, diagnosis, care, or treatment was recommended or received by *E* within the 6-month period ending on *E*'s enrollment date in Employer *X*'s plan.

(2) *Adopted Children.* Subject to paragraph (b)(3) of this section, a group health plan, and a health insurance issuer offering group health insurance coverage, may not impose any preexisting condition exclusion in the case of a child who is adopted or placed for adoption before attaining 18 years of age and who, as of the last day of the 30-day period beginning on the date of the adoption or placement for adoption, is covered under creditable coverage. This rule does not apply to coverage before the date of such adoption or placement for adoption.

(3) *Break in coverage.* Paragraphs (b)(1) and (b)(2) of this section no longer apply to a child after a significant break in coverage.

(4) *Pregnancy.* A group health plan, and a health insurance issuer offering group health insurance coverage, may not impose a preexisting condition exclusion relating to pregnancy as a preexisting condition.

(5) *Special enrollment dates.* For special enrollment dates relating to new dependents, see § 146.117(b).

(c) *Notice of plan's preexisting condition exclusion.* A group health plan, and health insurance issuer offering group health insurance under the plan, may not impose a preexisting condition exclusion with respect to a participant or dependent of the participant before notifying the participant, in writing, of the existence and terms of any preexisting condition exclusion under the plan and of the rights of individuals to demonstrate creditable coverage (and any applicable waiting periods) as required by § 146.115. The description of the rights of individuals to demonstrate creditable coverage includes a description of the right of the individual to request a certificate from a prior plan or issuer, if necessary, and a statement that the current plan or issuer will assist in obtaining a certificate from any prior plan or issuer, if necessary.

§ 146.113 Rules relating to creditable coverage.

(a) *General rules*)—(1) *Creditable coverage.* For purposes of this section, except as provided in paragraph (a)(2), the term creditable coverage means coverage of an individual under any of the following:

(i) A group health plan as defined in § 144.103.

(ii) Health insurance coverage as defined in § 144.103 (whether or not the entity offering the coverage is subject to the requirements of this part and 45 CFR part 148, and without regard to whether the coverage is offered in the group market, the individual market, or otherwise).

(iii) Part A or part B of title XVIII of the Social Security Act (Medicare).

(iv) Title XIX of the Social Security Act (Medicaid), other than coverage consisting solely of benefits under section 1928 of the Social Security Act (the program for distribution of pediatric vaccines).

(v) Title 10 U.S.C. Chapter 55 (medical and dental care for members and certain former members of the uniformed services, and for their dependents; for purposes of title 10 U.S.C. chapter 55, ''uniformed services'' means the armed forces and the Commissioned Corps of the National Oceanic and Atmospheric Administration and of the Public Health Service).

(vi) A medical care program of the Indian Health Service or of a tribal organization.

(vii) A State health benefits risk pool. For purposes of this section, a State health benefits risk pool means—

(A) An organization qualifying under section 501(c)(26) of the Code;

(B) A qualified high risk pool described in section 2744(c)(2) of the PHS Act; or

(C) Any other arrangement sponsored by a State, the membership composition of which is specified by the State and which is established and maintained primarily to provide health insurance coverage for individuals who are residents of such State and who, by reason of the existence or history of a medical condition—

(*1*) Are unable to acquire medical care coverage for such condition through insurance or from an HMO; or

(*2*) Are able to acquire such coverage only at a rate which is substantially in

excess of the rate for such coverage through the membership organization.

(viii) A health plan offered under title 5 U.S.C. chapter 89 (the Federal Employees Health Benefits Program).

(ix) A public health plan. For purposes of this section, a public health plan means any plan established or maintained by a State, county, or other political subdivision of a State that provides health insurance coverage to individuals who are enrolled in the plan.

(x) A health benefit plan under section 5(e) of the Peace Corps Act (22 U.S.C. 2504(e)).

(2) *Excluded coverage.* Creditable coverage does not include coverage consisting solely of coverage of excepted benefits (described in § 146.145).

(3) *Methods of counting creditable coverage.* For purposes of reducing any preexisting condition exclusion period, as provided under § 146.111(a)(1)(iii), a group health plan, and a health insurance issuer offering group health insurance coverage, determines the amount of an individual's creditable coverage by using the standard method described in paragraph (b), except that the plan, or issuer, may use the alternative method under paragraph (c) with respect to any or all of the categories of benefits described under paragraph (c)(3).

(b) *Standard method*—(1) *Specific benefits not considered.* Under the standard method, a group health plan, and a health insurance issuer offering group health insurance coverage, determines the amount of creditable coverage without regard to the specific benefits included in the coverage.

(2) *Counting creditable coverage*—(i) *Based on days.* For purposes of reducing the preexisting condition exclusion period, a group health plan, and a health insurance issuer offering group health insurance coverage, determines the amount of creditable coverage by counting all the days that the individual has under one or more types of creditable coverage. Accordingly, if on a particular day, an individual has creditable coverage from more than one source, all the creditable coverage on that day is counted as one day. Further, any days in a waiting period for a plan or policy are not creditable coverage under the plan or policy.

(ii) *Days not counted before significant break in coverage.* Days of creditable coverage that occur before a significant break in coverage are not required to be counted.

(iii) *Definition of significant break in coverage.* A significant break in coverage means a period of 63 consecutive days during all of which the individual does not have any creditable coverage, except that neither a waiting period nor an affiliation period is taken into account in determining a significant break in coverage. (See section 731(b)(2)(iii) of ERISA and section 2723(b)(2)(iii) of the PHS Act, which exclude from preemption State insurance laws that require a break of more than 63 days before an individual has a significant break in coverage for purposes of State law.)

(iv) *Examples.* The following examples illustrate how creditable coverage is counted in reducing preexisting condition exclusion periods:

Example 1: (i) Individual *A* work for Employer *P* and has creditable coverage under Employer *P*'s plan for 18 months before *A*'s employment terminates. *A* is hired by Employer *O*, and enrolls in Employer *O*'s group health plan, 64 days after the last date of coverage under Employer *P*'s plan. Employer *O*'s plan has a 12-month preexisting condition exclusion period.

(ii) In this *Example*, because *A* had a break in coverage of 63 days, Employer *O*'s plan may disregard *A*'s prior coverage and *A* may be subject to a 12-month preexisting condition exclusion period.

Example 2: (i) Same facts as *Example 1*, except that *A* is hired by Employer *O*, and enrolls in Employer *O*'s plan, on the 63rd day after the last date of coverage under Employer *P*'s plan.

(ii) In this *Example*, *A* has a break in coverage of 62 days. Because *A*'s break in coverage is not a significant break in coverage, Employer *O*'s plan must count *A*'s prior creditable coverage for purposes of reducing the plan's preexisting condition exclusion period as it applies to *A*.

Example 3: (i) Same facts as *Example 1*, except that Employer *O*'s plan provides benefits through an insurance policy that, as required by applicable State insurance laws, defines a significant break in coverage as 90 days.

(ii) In this *Example*, the issuer that provides group health insurance to Employer *O's* plan must count *A's* period of creditable coverage prior to the 63-day break.

Example 4: (i) Same facts as *Example 3*, except that Employer *O*'s plan is a self-insured plan, and thus is not subject to State insurance laws.

(ii) In this *Example*, the plan is not governed by the longer break rules under State insurance law and *A*'s previous coverage may be disregarded.

Example 5: (i) Individual *B* begins employment with Employer *R* 45 days after terminating coverage under a prior group health plan. Employer *R*'s group health plan has a 30-day waiting period before coverage begins. *B* enrolls in Employer *R*'s plan when first eligible.

(ii) In this *Example*, *B* does not have a significant break in coverage for purposes of determining whether *B*'s prior coverage must be counted by Employer *R*'s plan. *B* has only a 44-day break in coverage because the 30-day waiting period is not taken into account in determining a significant break in coverage.

Example 6: (i) Individual *C* works for Employer *S* and has creditable coverage under Employer *S*'s plan for 200 days before *C*'s employment is terminated and coverage ceases. *C* is then unemployed for 51 days before being hired by Employer *T*. Employer *T*'s plan has a 3-month waiting period. *C* works for Employer *T* for 2 months and then terminates employment. Eleven days after terminating employment with Employer *T*, *C* begins working for Employer *U*. Employer *U*'s plan has no waiting period, but has a 6-month preexisting condition exclusion period.

(ii) In this *Example*, *C* does not have a significant break in coverage because, after disregarding the waiting period under Employer *T*'s plan, *C* had only a 62-day break in coverage (51 days plus 11 days). Accordingly, *C* has 200 days of creditable coverage and Employer *U*'s plan may not apply its 6-month preexisting condition exclusion period with respect to *C*.

Example 7: (i) Individual *D* terminates employment with Employer *V* on January 13, 1998 after being covered for 24 months under Employer *V*'s group health plan. On March 17, the 63rd day without coverage, *D* applies for a health insurance policy in the individual market. *D*'s application is accepted and the coverage is made effective May 1.

(ii) In this *Example*, because *D* applied for the policy before the end of the 63rd day, and coverage under the policy ultimately became effective, the period between the date of application and the first day of coverage is a waiting period, and no significant break in coverage occurred even though the actual period without coverage was 107 days.

Example 8: (i) Same facts as *Example 7*, except that *D*'s application for a policy in the individual market is denied.

(ii) In this *Example*, because *D* did not obtain coverage following application, *D* incurred a significant break in coverage on the 64th day.

(v) *Other permissible counting methods*—(A) *General rule.* Notwithstanding any other provisions of this paragraph (b)(2), for purposes of reducing a preexisting condition exclusion period (but not for purposes of issuing a certificate under § 146.115), a group health plan, and a health insurance issuer offering group health insurance coverage, may determine the amount of creditable coverage in any other manner that is at least as favorable to the individual as the method set forth in this paragraph (b)(2), subject to the requirements of other applicable law.

(B) *Example.* The following example illustrates the requirements of this paragraph (b)(2)(v):

Example: (1) Individual F has coverage under group health plan *Y* from January 3, 1997 through March 25, 1997. *F* then becomes covered by group health plan *Z*. *F*'s enrollment date in Plan *Z* is May 1, 1997. Plan *Z* has a 12-month preexisting condition exclusion period.

(ii) In this *Example*, Plan *Z* may determine, in accordance with the rules prescribed in

paragraph (b)(2) (i), (ii), and (iii), that *F* has 82 days of creditable coverage (29 days in January, 28 days in February, and 25 days in March). Thus, the preexisting condition exclusion period will no longer apply to *F* on February 8, 1998 (82 days before the 12-month anniversary of *F*'s enrollment (May 1)). For administrative convenience, however, Plan *Z* may consider that the preexisting condition exclusion period will no longer apply to *F* on the first day of the month (February 1).

(c) *Alternative method*—(1) *Specific benefits considered.* Under the alternative method, a group health plan, or a health insurance issuer offering group health insurance coverage, determines the amount of creditable coverage based on coverage within any category of benefits described in paragraph (c)(3) and not based on coverage for any other benefits. The plan or issuer may use the alternative method for any or all of the categories. The plan may apply a different preexisting condition exclusion period with respect to each category (and may apply a different preexisting condition exclusion period for benefits that are not within any category). The creditable coverage determined for a category of benefits applies only for purposes of reducing the preexisting condition exclusion period with respect to that category. An individual's creditable coverage for benefits that are not within any category for which the alternative method is being used is determined under the standard method of paragraph (b).

(2) *Uniform application.* A plan or issuer using the alternative method is required to apply it uniformly to all participants and beneficiaries under the plan or policy. The use of the alternative method is set forth in the plan.

(3) *Categories of benefits.* The alternative method for counting creditable coverage may be used for coverage for any of the following categories of benefits:

(i) Mental health.

(ii) Substance abuse treatment.

(iii) Prescription drugs.

(iv) Dental care.

(v) Vision care.

(4) *Plan notice.* If the alternative method is used, the plan is required to—

(i) State prominently that the plan is using the alternative method of counting creditable coverage in disclosure statements concerning the plan, and state this to each enrollee at the time of enrollment under the plan; and

(ii) Include in these statements a description of the effect of using the alternative method, including an identification of the categories used.

(5) *Issuer notice.* With respect to health insurance coverage offered by an issuer in the small or large group market, if the insurance coverage uses the alternative method, the issuer states prominently in any disclosure statement concerning the coverage, and to each employer at the time of the offer or sale of the coverage, that the issuer is using the alternative method, and include in such statements a description of the effect of using the alternative method. This applies separately to each type of coverage offered by the health insurance issuer.

(6) *Disclosure of information on previous benefits.* See § 146.115(b) for special rules concerning disclosure of coverage to a plan, or issuer, using the alternative method of counting creditable coverage under this paragraph (c).

(7) *Counting creditable coverage*—(i) *General.* Under the alternative method, the group health plan or issuer counts creditable coverage within a category if any level of benefits is provided within the category. Coverage under a reimbursement account or arrangement, such as a flexible spending arrangement, (as defined in section 106(c)(2) of the Internal Revenue Code), does not constitute coverage within any category.

(ii) *Special rules.* In counting an individual's creditable coverage under the alternative method, the group health plan, or issuer, first determines the amount of the individual's creditable coverage that may be counted under paragraph (b), up to a total of 365 days of the most recent creditable coverage (546 days for a late enrollee). The period over which this creditable coverage is determined is referred to as the ''determination period.'' Then, for the category specified under the alternative method, the plan or issuer counts within the category all days of coverage that occurred during the determination period (whether or not a significant break in coverage for that category occurs), and reduces the individual's preexisting condition exclusion period for that category by that number of days. The plan or issuer may determine the amount of creditable coverage in any other reasonable manner, uniformly applied, that is at least as favorable to the individual.

(iii) *Example.* The following example illustrates the requirements of this paragraph (c)(7):

Example: (i) Individual *D* enrolls in Employer *V*'s plan on January 1, 2001. Coverage under the plan includes prescription drug benefits. On April 1, 2001, the plan ceases providing prescription drug benefits. *D*'s employment with Employer *V* ends on January 1, 2002, after *D* was covered under Employer *V*'s group health plan for 365 days. *D* enrolls in Employer *Y*'s plan on February 1, 2001 (*D*'s enrollment date). Employer *Y*'s plan uses the alternative method of counting creditable coverage and imposes a 12-month preexisting condition exclusion on prescription drug benefits.

(ii) In this *Example,* Employer *Y*'s plan may impose a 275-day preexisting condition exclusion with respect to *D* for prescription drug benefits because *D* had the equivalent of 90-days of creditable coverage relating to prescription drug benefits within *D*'s determination period.

§ 146.115 Certification and disclosure of previous coverage.

(a) *Certificate of creditable coverage*—(1) *Entities required to provide certificate*—(i) *General.* A group health plan, and each health insurance issuer offering group health insurance coverage under a group health plan, is required to certificates of creditable coverage in accordance with this paragraph (a).

(ii) *Duplicate certificates not required.* An entity required to provide a certificate under this paragraph (a)(1) for an individual is deemed to have satisfied the certification requirements for that individual if another party provides the certificate, but only to the extent that information relating to the individual's creditable coverage and waiting or affiliation period is provided by the other party. For example, in the case of a group health plan funded through an insurance policy, the issuer is deemed to have satisfied the certification requirement with respect to a participant or beneficiary if the plan actually provides a certificate that includes the information required under paragraph (a)(3) with respect to the participant or beneficiary.

(iii) *Special rule for group health plan.* To the extent coverage under a plan consists of group health insurance coverage, the plan is deemed to have satisfied the certification requirements under this paragraph (a)(1) if any issuer offering the coverage is required to provide the certificates pursuant to an agreement between the plan and the issuer. For example, if there is an agreement between an issuer and the plan sponsor under which the issuer agrees to provide certificates for individuals covered under the plan, and the issuer fails to provide a certificate to an individual when the plan would have been required to provide one under this paragraph (a), then the issuer, but not the plan, violates the certification requirements of this paragraph (a).

(iv) *Special rules for issuers*—(A) *Responsibility of issuer for coverage period*—(*1*) *General rule.* An issuer is

not required to provide information regarding coverage provided to an individual by another party.

(2) *Example.* The following example illustrates the requirements of this paragraph (a)(1)(iv)(A):

Example. (i) A plan offers coverage with an HMO option from one issuer and an indemnity option from a different issuer. The HMO has not entered into an agreement with the plan to provide certificates as permitted under paragraph (a)(1)(iii) of this section.

(ii) In this *Example,* if an employee switches from the indemnity option to the HMO option and later ceases to be covered under the plan, any certificate provided by the HMO is not required to provide information regarding the employee's coverage under the indemnity option.

(B) *Cessation of issuer coverage prior to cessation of coverage under a plan—* (*1*) *General rule.* If an individual's coverage under an issuer's policy ceases before the individual's coverage under the plan ceases, the issuer is required to provide sufficient information to the plan (or to another party designated by the plan) to enable a certificate to be provided by the plan (or other party), after cessation of the individual's coverage under the plan, that reflects the period of coverage under the policy. The provision of that information to the plan will satisfy the issuer's obligation to provide an automatic certificate for that period of creditable coverage for the individual under paragraphs (a)(2)(ii) and (a)(3) of this section. In addition, an issuer providing that information is required to cooperate with the plan in responding to any request made under paragraph (b)(2) of this section (relating to the alternative method of counting creditable coverage). If the individual's coverage under the plan ceases at the time the individual's coverage under the issuer's policy ceases, the issuer must provide an automatic certificate under paragraph (a)(2)(ii) of this section. An issuer may presume that an individual whose coverage ceases at a time other than the effective date for changing enrollment options has ceased to be covered under the plan.

(*2*) *Example.* The following example illustrates the requirements of this paragraph (a)(1)(iv)(B):

Example: (i) A group health plan provides coverage under an HMO option and an indemnity option with a different issuer, and only allows employees to switch on each January 1. Neither the HMO nor the indemnity issuer has entered into an agreement with the plan to provide automatic certificates as permitted under paragraph (a)(2)(ii) of this section.

(ii) In this *Example,* if an employee switches from the indemnity option to the HMO option on January 1, the issuer must provide the plan (or a person designated by the plan) with appropriate information with respect to the individual's coverage with the indemnity issuer. However, if the individual's coverage with the indemnity issuer ceases at a date other than January 1, the issuer is instead required to provide the individual with an automatic certificate.

(2) *Individuals for whom a certificate must be provided; timing of issuance—* (i) *Individuals.* A certificate must be provided, without charge, for participants or dependents who are or were covered under a group health plan upon the occurrence of any of the events described in paragraph (a)(2)(ii) and (a)(2)(iii) of this section.

(ii) *Issuance of automatic certificates.* The certificates described in this paragraph (a)(2)(ii) of this section are referred to as ''automatic certificates.''

(A) *Qualified beneficiaries upon a qualifying event.* In the case of an individual who is a qualified beneficiary (as defined in section 607(3) of ERISA, section 4980B(g)(1) of the Code, or section 2208 of the PHS Act) entitled to elect COBRA continuation coverage, an automatic certificate is required to be provided at the time the individual would lose coverage under the plan in the absence of COBRA continuation coverage or alternative coverage elected instead of COBRA continuation coverage. A plan or issuer satisfies this requirement if it provides the automatic certificate no later than the time a notice is required to be furnished for a qualifying event under section 606 of the Act, section 4980B(f)(6) of the Code and section 2206 of the PHS Act (relating to notices required under COBRA).

(B) *Other individuals when coverage ceases.* In the case of an individual who is not a qualified beneficiary entitled to elect COBRA continuation coverage, an automatic certificate is required to be provided at the time the individual ceases to be covered under the plan. A plan or issuer satisfies this requirement if it provides the automatic certificate within a reasonable time period thereafter. In the case of an individual who is entitled to elect to continue coverage under a State program similar to COBRA and who receives the automatic certificate not later than the time a notice is required to be furnished under the State program, the certificate is deemed to be provided within a reasonable time period after the cessation of coverage under the plan.

(C) *Qualified beneficiaries when COBRA ceases.* In the case of an individual who is a qualified beneficiary and has elected COBRA continuation coverage (or whose coverage has continued after the individual became entitled to elect COBRA continuation coverage), an automatic certificate is to be provided at the time the individual's coverage under the plan ceases. A plan, or issuer, satisfies this requirement if it provides the automatic certificate within a reasonable time after coverage ceases (or after the expiration of any grace period for nonpayment of premiums). An automatic certificate is required to be provided to such an individual regardless of whether the individual has previously received an automatic certificate under paragraph (a)(2)(ii)(A) of this section.

(iii) *Any individual upon request.* Requests for certificates are permitted to be made by, or on behalf of, an individual within 24 months after coverage ceases. Thus, for example, a plan in which an individual enrolls may, if authorized by the individual, request a certificate of the individual's creditable coverage on behalf of the individual from a plan in which the individual was formerly enrolled. After the request is received, a plan or issuer is required to provide the certificate by the earliest date that the plan or issuer, acting in a reasonable or prompt fashion can provide the certificate. A certificate is to be provided under this paragraph (a)(2)(iii) even if the individual has previously received a certificate under this paragraph (a)(2)(iii) or an automatic certificate under paragraph (a)(2)(ii) of this section.

(iv) *Examples.* The following examples illustrate the requirements of this paragraph (a)(2).

Example 1: (i) Individual *A* terminates employment with Employer *O. A* is a qualified beneficiary entitled to elect COBRA continuation coverage under Employer *O*'s group health plan. A notice of the rights provided under COBRA is typically furnished to qualified beneficiaries under the plan within 10 days after a covered employee terminates employment.

(ii) In this *Example,* the automatic certificate may be provided at the same time that *A* is provided the COBRA notice.

Example 2: (i) Same facts as *Example 1,* except that the automatic certificate for *A* is not completed by the time the COBRA notice is furnished to *A.*

(ii) In this *Example,* the automatic certificate may be provided within the period permitted by law for the delivery of notices under COBRA.

Example 3: (i) Employer *R* maintains an insured group health plan. *R* has never had 20 employees and thus *R*'s plan is not subject to the COBRA continuation coverage provisions. However, *R* is in a State that has a State program similar to COBRA. *B* terminates employment with *R* and loses coverage under *R*'s plan.

(ii) In this *Example,* the automatic certificate may be provided not later than the time a notice is required to be furnished under the State program.

Example 4: (i) Individual *C* terminates employment with Employer *S* and receives both a notice of *C*'s rights under COBRA and an automatic certificate. *C* elects COBRA continuation coverage under Employer *S*'s group health plan. After four months of COBRA continuation coverage and the expiration of a 30-day grace period, *S*'s group health plan determines that *C*'s COBRA continuation coverage has ceased due to failure to make a timely payment for continuation coverage.

(ii) In this *Example*, the plan must provide an updated automatic certificate to *C* within a reasonable time after the end of the grace period.

Example 5: (i) Individual *D* is currently covered under the group health plan of Employer *T*. *D* requests a certificate, as permitted under paragraph (a)(2)(iii). Under the procedure for Employer *T*'s plan, certificates are mailed (by first class mail) 7 business days following receipt of the request. This date reflects the earliest date that the plan, acting in a reasonable and prompt fashion, can provide certificates.

(ii) In this *Example*, the plan's procedure satisfies paragraph (a)(2)(iii) of this section.

(3) *Form and content of certificate*—(i) *Written certificate*—(A) *General.* Except as provided in paragraph (a)(3)(i)(B) of this section, the certificate must be provided in writing (including any form approved by HCFA as a writing).

(B) *Other permissible forms.* No written certificate is required to be provided under this paragraph (a) with respect to a particular event described in paragraphs (a)(2)(ii) and (a)(2)(iii) of this section if all the following conditions are met:

(*1*) An individual is entitled to receive a certificate.

(*2*) The individual requests that the certificate be sent to another plan or issuer instead of to the individual.

(*3*) The plan or issuer that would otherwise receive the certificate agrees to accept the information in paragraph (a)(3) through means other than a written certificate (for example, by telephone).

(*4*) The receiving plan or issuer receives the information from the sending plan or issuer in such form within the time periods required under paragraph (a)(2) of this section.

(ii) *Required information.* The certificate must include all of the following:

(A) The date the certificate is issued.

(B) The name of the group health plan that provided the coverage described in the certificate.

(C) The name of the participant or dependent with respect to whom the certificate applies, and any other information necessary for the plan providing the coverage specified in the certificate to identify the individual, such as the individual's identification number under the plan and the name of the participant if the certificate is for (or includes) a dependent.

(D) The name, address, and telephone number of the plan administrator or issuer required to provide the certificate.

(E) The telephone number to call for further information regarding the certificate (if different from paragraph (a)(3)(ii)(D)).

(F) Either—

(*1*) A statement that an individual has at least 18 months (for this purpose, 546 days is deemed to be 18 months) of creditable coverage, disregarding days of creditable coverage before a significant break in coverage, or

(*2*) The date any waiting period (and affiliation period, if applicable) began and the date creditable coverage began.

(G) The date creditable coverage ended, unless the certificate indicates that creditable coverage is continuing as of the date of the certificate.

(iii) *Periods of coverage under certificate.* If an automatic certificate is provided under paragraph (a)(2)(ii) of this section, the period that must be included on the certificate is the last period of continuous coverage ending on the date coverage ceased. If an individual requests a certificate under paragraph (a)(2)(iii) of this section, a certificate must be provided for each period of continuous coverage ending within the 24-month period ending on the date of the request (or continuing on the date of the request). A separate certificate may be provided for each such period of continuous coverage.

(iv) *Combining information for families.* A certificate may provide information with respect to both a participant and the participant's dependents if the information is identical for each individual or, if the information is not identical, certificates may be provided on one form if the form provides all the required information for each individual and separately states the information that is not identical.

(v) *Model certificate.* The requirements of paragraph (a)(3)(ii) of this section are satisfied if the plan or issuer provides a certificate in accordance with a model certificate authorized by HCFA.

(vi) *Excepted benefits; categories of benefits.* No certificate is required to be furnished with respect to excepted benefits described in § 146.145. In addition, the information in the certificate regarding coverage is not required to specify categories of benefits described in § 146.113(c) (relating to the alternative method of counting creditable coverage). However, if excepted benefits are provided concurrently with other creditable coverage (so that the coverage does not consist solely of excepted benefits), information concerning the benefits may be required to be disclosed under paragraph (b) of this section.

(4) *Procedures*—(i) *Method of delivery.* The certificate is required to be provided to each individual described in paragraph (a)(2) of this section or an entity requesting the certificate on behalf of the individual. The certificate may be provided by first-class mail. If the certificate or certificates are provided to the participant and the participant's spouse at the participant's last known address, then the requirements of this paragraph (a)(4) are satisfied with respect to all individuals residing at that address. If a dependent's last known address is different than the participant's last known address, a separate certificate is required to be provided to the dependent at the dependent's last known address. If separate certificates are being provided by mail to individuals who reside at the same address, separate mailings of each certificate are not required.

(ii) *Procedure for requesting certificates.* A plan or issuer must establish a procedure for individuals to request and receive certificates under paragraph (a)(2)(iii) of this section.

(iii) *Designated recipients.* If an automatic certificate is required to be provided under paragraph (a)(2)(ii) of this section, and the individual entitled to receive the certificate designates another individual or entity to receive the certificate, the plan or issuer responsible for providing the certificate is permitted to provide the certificate to the designated party. If a certificate is required to be provided upon request under paragraph (a)(2)(iii) of this section and the individual entitled to receive the certificate designates another individual or entity to receive the certificate, the plan or issuer responsible for providing the certificate is required to provide the certificate to the designated party.

(5) *Special rules concerning dependent coverage*—(i) *Reasonable efforts*—(A) *General rule.* A plan or issuer is required to use reasonable efforts to determine any information needed for a certificate relating to the dependent coverage. In any case in which an automatic certificate is required to be furnished with respect to a dependent under paragraph (a)(2)(ii) of this section, no individual certificate is required to be furnished until the plan or issuer knows (or making reasonable efforts should know) of the

dependent's cessation of coverage under the plan.

(B) *Example.* The following example illustrates the requirements of this paragraph (a)(5)(i):

Example: (i) A group health plan covers employees and their dependents. The plan annually requests all employees to provide updated information regarding dependents, including the specific date on which an employee has a new dependent or on which a person ceases to be a dependent of the employee.

(ii) In this *Example,* the plan has satisfied the standard in this paragraph (a)(5)(i) that it make reasonable efforts to determine the cessation of dependents' coverage and the related dependent coverage information.

(ii) *Special rules for demonstrating coverage.* If a certificate furnished by a plan or issuer does not provide the name of any dependent of an individual covered by the certificate, the individual may, if necessary, use the procedures described in paragraph (c)(4) of this section for demonstrating dependent status. In addition, an individual may, if necessary, use these procedures to demonstrate that a child was enrolled within 30 days of birth, adoption, or placement for adoption. See § 146.111(b), under which such a child would not be subject to a preexisting condition exclusion.

(iii) *Transition rule for dependent coverage through June 30, 1998*—(A) *General.* A group health plan or health insurance issuer that cannot provide the names of dependents (or related coverage information) for purposes of providing a certificate of coverage for a dependent may satisfy the requirements of paragraph (a)(3)(ii)(C) of this section by providing the name of the participant covered by the group health plan or health insurance issuer and specifying that the type of coverage described in the certificate is for dependent coverage (for example, family coverage or employee-plus-spouse coverage).

(B) *Certificates provided on request.* For purposes of certificates provided on the request of, or on behalf of, an individual under paragraph (a)(2)(iii) of this section, a plan or issuer must make reasonable efforts to obtain and provide the names of any dependent covered by the certificate where such information is requested to be provided. It does not include the name of any dependent of an individual covered by the certificate, the individual may, if necessary, use the procedures described in paragraph (c) of this section for submitting documentation to establish that the creditable coverage in the certificate applies to the dependent.

(C) *Demonstrating a dependent's creditable coverage.* See paragraph (c)(4) of this section for special rules to demonstrate dependent status.

(D) *Duration.* This paragraph (a)(5)(iii) is only effective for certifications provided with respect to events occurring through June 30, 1998.

(6) *Special certification rules*—(i) *Issuers.* Issuers of group and individual health insurance are required to provide certificates of any creditable coverage they provide in the group or individual health insurance market, even if the coverage is provided in connection with an entity or program that is not itself required to provide a certificate because it is not subject to the group market provisions of this part, part 7 of subtitle B of title I of ERISA, or chapter 100 of subtitle K of the Internal Revenue Code. This would include coverage provided in connection with any of the following:

(A) Creditable coverage described in sections 2701 (c)(1)(G) through (c)(1)(J) of the PHS Act (coverage under a State health benefits risk pool, the Federal Employees Health Benefits Program, a public health plan, and a health benefit plan under section 5(e) of the Peace Corps Act),

(B) Coverage subject to section 2721(b)(1)(B) of the PHS Act (requiring certificates by issuers offering health insurance coverage in connection with any group health plan, including a church plan or a governmental plan (including the Federal Employees Health Benefits Program (FEHBP)).

(C) Coverage subject to section 2743 of the PHS Act applicable to health insurance issuers in the individual market. (However, this section does not require a certificate to be provided with respect to short-term limited duration insurance, which is excluded from the definition of ''individual health insurance coverage'' in 45 CFR 144.103 that is not provided in connection with a group health plan, as described in paragraph (a)(6)(i)(B) of this section.)

(ii) *Other entities.* For special rules requiring that certain other entities, not subject to this part, provide certificates consistent with the rules in this section, see section 2791(a)(3) of the PHS Act applicable to entities described in sections 2701(c)(1)(C), (D), (E), and (F) of the PHS Act (relating to Medicare, Medicaid, CHAMPUS, and Indian Health Service), section 2721(b)(1)(A) of the PHS Act applicable to non-Federal governmental plans generally, section 2721(b)(2)(C)(ii) of the PHS Act applicable to non-Federal governmental plans that elect to be excluded from the requirements of subparts 1 and 3 of part A of title XXVII of the PHS Act, and section 9805(a) of the Internal Revenue Code applicable to group health plans, which includes church plans (as defined in section 414(e) of the Internal Revenue Code).

(b) *Disclosure of coverage to a plan, or issuer, using the alternative method of counting creditable coverage*—(1) *General.* If an individual enrolls in a group health plan with respect to which the plan, or issuer, uses the alternative method of counting creditable coverage described in section 2701(c)(3)(B) of the PHS Act and § 146.113(c), the individual provides a certificate of coverage under paragraph (a) of this section, and the plan or issuer in which the individual enrolls so requests, the entity that issued the certificate (the ''prior entity'') is required to disclose promptly to a requesting plan or issuer (the ''requesting entity'') the information set forth in paragraph (b)(2) of this section.

(2) *Information to be disclosed.* The prior entity is required to identify to the requesting entity the categories of benefits with respect to which the requesting entity is using the alternative method of counting creditable coverage, and the requesting entity may identify specific information that the requesting entity reasonably needs in order to determine the individual's creditable coverage with respect to any such category. The prior entity is required to disclose promptly to the requesting entity the creditable coverage information so requested.

(3) *Charge for providing information.* The prior entity furnishing the information under paragraph (b) of this section may charge the requesting entity for the reasonable cost of disclosing such information.

(c) *Ability of an individual to demonstrate creditable coverage and waiting period information*—(1) *General.* The rules in this paragraph (c) implement section 2701(c)(4) of the PHS Act, which permits individuals to establish creditable coverage through means other than certificates, and section 2701(e)(3) of the PHS Act, which requires the Secretary to establish rules designed to prevent an individual's subsequent coverage under a group health plan or health insurance coverage from being adversely affected by an entity's failure to provide a certificate with respect to that individual. If the accuracy of a certificate is contested or a certificate is unavailable when needed by the individual, the individual has the right to demonstrate creditable coverage (and waiting or affiliation periods) through the presentation of documents or other means. For example, the individual may make such a demonstration when—

(i) An entity has failed to provide a certificate within the required time period;

(ii) The individual has creditable coverage but an entity may not be required to provide a certificate of the coverage under paragraph (a) of this section;

(iii) The coverage is for a period before July 1, 1996;

(iv) The individual has an urgent medical condition that necessitates a determination before the individual can deliver a certificate to the plan; or

(v) The individual lost a certificate that the individual had previously received and is unable to obtain another certificate.

(2) *Evidence of creditable coverage*—(i) *Consideration of evidence.* A plan or issuer is required to take into account all information that it obtains or that is presented on behalf of an individual to make a determination, based on the relevant facts and circumstances, whether an individual has creditable coverage and is entitled to offset all or a portion of any preexisting condition exclusion period. A plan or issuer shall treat the individual as having furnished a certificate under paragraph (a) of this section if the individual attests to the period of creditable coverage, the individual also presents relevant corroborating evidence of some creditable coverage during the period, and the individual cooperates with the plan's or issuer's efforts to verify the individual's coverage. For this purpose, cooperation includes providing (upon the plan's or issuer's request) a written authorization for the plan or issuer to request a certificate on behalf of the individual, and cooperating in efforts to determine the validity of the corroborating evidence and the dates of creditable coverage. While a plan or issuer may refuse to credit coverage where the individual fails to cooperate with the plan's or issuer's efforts to verify coverage, the plan or issuer may not consider an individual's inability to obtain a certificate to be evidence of the absence of creditable coverage.

(ii) *Documents.* Documents that may establish creditable coverage (and waiting periods or affiliation periods) in the absence of a certificate include explanations of benefit claims (EOB) or other correspondence from a plan or issuer indicating coverage, pay stubs showing a payroll deduction for health coverage, a health insurance identification card, a certificate of coverage under a group health policy, records from medical care providers indicating health coverage, third party statements verifying periods of coverage, and any other relevant documents that evidence periods of health coverage.

(iii) *Other evidence.* Creditable coverage (and waiting period or affiliation period information) may also be established through means other than documentation, such as by a telephone call from the plan or provider to a third party verifying creditable coverage.

(iv) *Example.* The following example illustrates the requirements of this paragraph (c)(2):

Example: (i) Employer *X*'s group health plan imposes a preexisting condition exclusion of 12 months on new enrollees under the plan and uses the standard method of determining creditable coverage. *F* fails to receive a certificate of prior coverage from the self-insured group health plan maintained by *F*'s prior employer, Employer *W*, and requests a certificate. However, *F* (and Employer *X*'s plan, on *F*'s behalf) is unable to obtain a certificate from Employer *W*'s plan. *F* attests that, to the best of *F*'s knowledge, *F* had at least 12 months of continuous coverage under Employer *W*'s plan, and that the coverage ended no earlier than *F*'s termination of employment from Employer *W*. In addition, *F* presents evidence of coverage, such as an explanation of benefits for a claim that was made during the relevant period.

(ii) In this *Example,* based solely on these facts, *F* has demonstrated creditable coverage for the 12 months of coverage under Employer *W*'s plan in the same manner as if *F* had presented a written certificate of creditable coverage.

(3) *Demonstrating categories of creditable coverage.* Procedures similar to those described in this paragraph (c) apply in order to determine an individual's creditable coverage with respect to any category under paragraph (b) of this section (relating to determining creditable coverage under the alternative method).

(4) *Demonstrating dependent status.* If, in the course of providing evidence (including a certificate) of creditable coverage, an individual is required to demonstrate dependent status, the group health plan or issuer is required to treat the individual as having furnished a certificate showing the dependent status if the individual attests to such dependency and the period of such status and the individual cooperates with the plan's or issuer's efforts to verify the dependent status.

(d) *Determination and notification of creditable coverage*—(1) *Reasonable time period.* In the event that a group health plan or health insurance issuer offering group health insurance coverage receives information in this section under paragraph (a) (certifications), paragraph (b) (disclosure of information relating to the alternative method), or paragraph (c) (other evidence of creditable coverage), the entity is required, within a reasonable time period following receipt of the information, to make a determination regarding the individual's period of creditable coverage and notify the individual of the determination in accordance with paragraph (d)(2) of this section. Whether a determination and notification regarding an individual's creditable coverage is made within a reasonable time period is determined based on the relevant facts and circumstances. Relevant facts and circumstances include whether a plan's application of a preexisting condition exclusion would prevent an individual from having access to urgent medical services.

(2) *Notification to individual of period of preexisting condition exclusion.* A plan or issuer seeking to impose a preexisting condition exclusion is required to disclose to the individual, in writing, its determination of any preexisting condition exclusion period that applies to the individual, and the basis for such determination, including the source and substance of any information on which the plan or issuer relied. In addition, the plan or issuer is required to provide the individual with a written explanation of any appeal procedures established by the plan or issuer, and with a reasonable opportunity to submit additional evidence of creditable coverage. However, nothing in this paragraph (d) or paragraph (c) of this section prevents a plan or issuer from modifying an initial determination of creditable coverage if it determines that the individual did not have the claimed creditable coverage, provided that—

(i) A notice of the reconsideration is provided to the individual; and

(ii) Until the final determination is made, the plan or issuer, for purposes of approving access to medical services (such as a pre-surgery authorization), acts in a manner consistent with the initial determination.

(3) *Examples.* The following examples illustrate this paragraph (d):

Example: (i) Individual *F* terminates employment with Employer *W* and, a month later, is hired by Employer *X*. *Example 1:* Individual *G* is hired by Employer *Y*. Employer *Y*'s group health plan imposes a preexisting condition exclusion for 12 months with respect to new enrollees and uses the standard method of determining credible coverage. Employer *Y*'s plan determines that *G* is subject to a 4-month preexisting condition exclusion, based on a certificate of creditable coverage that is provided by *G* to Employer *Y*'s plan indicating 8 months of coverage under *G*'s prior group health plan.

(ii) In this *Example,* Employer *Y*'s plan must notify *G* within a reasonable period of time following receipt of the certificate that *G* is subject to a 4-month preexisting condition exclusion beginning on *G*'s enrollment date in *Y*'s plan.

Example 2: (i) Same facts as in *Example 1,* except that Employer *Y*'s plan determines that *G* has 14 months of creditable coverage based on *G*'s certificate indicating 14 months of creditable coverage under *G*'s prior plan.

(ii) In this *Example,* Employer *Y*'s plan is not required to notify *G* that *G* will not be subject to a preexisting condition exclusion.

Example 3: (i) Individual *H* is hired by Employer *Z*. Employer *Z*'s group health plan imposes a preexisting condition exclusion for 12 months with respect to new enrollees and uses the standard method of determining creditable coverage. *H* develops an urgent health condition before receiving a certificate of prior coverage. *H* attests to the period of prior coverage, presents corroborating documentation of the coverage period, and authorizes the plan to request a certificate on *H*'s behalf.

(ii) In this *Example,* Employer *Z*'s plan must review the evidence presented by *H*. In addition, the plan must make a determination and notify *H* regarding any preexisting condition exclusion period that applies to *H* (and the basis of such determination) within a reasonable time period following receipt of the evidence that is consistent with the urgency of *H*'s health condition (this determination may be modified as permitted under paragraph (d)(2)).

§ 146.117 Special enrollment periods.

(a) *Special enrollment for certain individuals who lose coverage*—(1) *General.* A group health plan, and a health insurance issuer offering group health insurance coverage in connection with a group health plan, is required to permit employees and dependents described in this section in paragraph (a)(2), (a)(3), or (a)(4) to enroll for coverage under the terms of the plan if the conditions in paragraph (a)(5) are satisfied and the enrollment is requested within the period described in paragraph (a)(6). The enrollment is effective at the time described in paragraph (a)(7). The special enrollment rights under this paragraph (a) apply without regard to the dates on which an individual would otherwise be able to enroll under the plan.

(2) *Special enrollment of an employee only.* An employee is described in this paragraph (a)(2) if the employee is eligible, but not enrolled, for coverage under the terms of the plan and, when enrollment was previously offered to the employee under the plan and was declined by the employee, the employee was covered under another group health plan or had other health insurance coverage.

(3) *Special enrollment of dependents only.* A dependent is described in this paragraph (a)(3) if the dependent is a dependent of an employee participating in the plan, the dependent is eligible, but not enrolled, for coverage under the terms of the plan, and, when enrollment was previously offered under the plan and was declined, the dependent was covered under another group health plan or had other health insurance coverage.

(4) *Special enrollment of both employee and dependent.* An employee and any dependent of the employee are described in this paragraph (a)(4) if they are eligible, but not enrolled, for coverage under the terms of the plan and, when enrollment was previously offered to the employee or dependent under the plan and was declined, the employee or dependent was covered under another group health plan or had other health insurance coverage.

(5) *Conditions for special enrollment.* An employee or dependent is eligible to enroll during a special enrollment period if each of the following applicable conditions is met:

(i) When the employee declined enrollment for the employee or the dependent, the employee stated in writing that coverage under another group health plan or other health insurance coverage was the reason for declining enrollment. This paragraph (a)(5)(i) applies only if—

(A) The plan required such a statement when the employee declined enrollment; and

(B) The employee is provided with notice of the requirement to provide the statement in paragraph (a)(5)(i) (and the consequences of the employee's failure to provide the statement) at the time the employee declined enrollment.

(ii) (A) When the employee declined enrollment for the employee or dependent under the plan, the employee or dependent had COBRA continuation coverage under another plan and COBRA continuation coverage under that other plan has since been exhausted; or

(B) If the other coverage that applied to the employee or dependent when enrollment was declined was not under a COBRA continuation provision, either the other coverage has been terminated as a result of loss of eligibility for the coverage or employer contributions towards the other coverage have been terminated. For this purpose, loss of eligibility for coverage includes a loss of coverage as a result of legal separation, divorce, death, termination of employment, reduction in the number of hours of employment, and any loss of eligibility after a period that is measured by reference to any of the foregoing. Thus, for example, if an employee's coverage ceases following a termination of employment and the employee is eligible for but fails to elect COBRA continuation coverage, this is treated as a loss of eligibility under this paragraph (a)(5)(ii)(B). However, loss of eligibility does not include a loss due to failure of the individual or the participant to pay premiums on a timely basis or termination of coverage for cause (such as making a fraudulent claim or an intentional misrepresentation of a material fact in connection with the plan). In addition, for purposes of this paragraph (a)(5)(ii)(B), employer contributions include contributions by any current or former employer (of the individual or another person) that was contributing to coverage for the individual.

(6) *Length of special enrollment period.* The employee is required to request enrollment (for the employee or the employee's dependent, as described in this section in paragraph (a)(2), paragraph (a)(3), or paragraph (a)(4)) not later than 30 days after the exhaustion of the other coverage described in paragraph (a)(5)(ii)(A) or termination of the other coverage as a result of the loss of eligibility for the other coverage for items described in paragraph (a)(5)(ii)(B) or following the termination of employer contributions toward that other coverage. The plan may impose the same requirements that apply to employees who are otherwise eligible under the plan to immediately request enrollment for coverage (for example, that the request be made in writing).

(7) *Effective date of enrollment.* Enrollment is effective not later than the first day of the first calendar month beginning after the date the completed request for enrollment is received.

(b) *Special enrollment with respect to certain dependent beneficiaries*—(1) *General.* A group health plan that makes coverage available with respect to dependents of a participant is required to provide a special enrollment period to permit individuals described in this section in paragraph (b)(2), (b)(3), (b)(4), (b)(5), or (b)(6) to be enrolled for coverage under the terms of the plan if the enrollment is requested within the time period described in paragraph (b)(7). The enrollment is effective at the time described in paragraph (b)(8). The special enrollment rights under this paragraph (b) apply without regard to the dates on which an individual would otherwise be able to enroll under the plan.

(2) *Special enrollment of an employee who is eligible but not enrolled.* An individual is described in this paragraph (b)(2) if the individual is an employee who is eligible, but not

enrolled, in the plan, the individual would be a participant but for a prior election by the individual not to enroll in the plan during a previous enrollment period, and a person becomes a dependent of the individual through marriage, birth, or adoption or placement for adoption.

(3) *Special enrollment of a spouse of a participant.* An individual is described in this paragraph (b)(3) if either—

(i) The individual becomes the spouse of a participant; or

(ii) The individual is a spouse of the participant and a child becomes a dependent of the participant through birth, adoption, or placement for adoption.

(4) *Special enrollment of an employee who is eligible but not enrolled and the spouse of such employee.* An employee who is eligible, but not enrolled, in the plan, and an individual who is a dependent of such employee, are described in this paragraph (b)(4) if the employee would be a participant but for a prior election by the employee not to enroll in the plan during a previous enrollment period, and either—

(i) The employee and the individual become married; or

(ii) The employee and individual are married and a child becomes a dependent of the employee through birth, adoption or placement for adoption.

(5) *Special enrollment of a dependent of a participant.* An individual is described in this paragraph (b)(5) if the individual is a dependent of a participant and the individual becomes a dependent of such participant through marriage, birth, or adoption or placement for adoption.

(6) *Special enrollment of an employee who is eligible but not enrolled and a new dependent.* An employee who is eligible, but not enrolled, in the plan, and an individual who is a dependent of the employee, are described in this paragraph (b)(6) if the employee would be a participant but for a prior election by the employee not to enroll in the plan during a previous enrollment period, and the dependent becomes a dependent of the employee through marriage, birth, or adoption or placement for adoption.

(7) *Length of special enrollment period.* The special enrollment period under paragraph (b)(1) of this section is a period of not less than 30 days and begins on the date of the marriage, birth, or adoption or placement for adoption (except that such period does not begin earlier than the date the plan makes dependent coverage generally available).

(8) *Effective date of enrollment.* Enrollment is effective—

(i) In the case of marriage, not later than the first day of the first calendar month beginning after the date the completed request for enrollment is received by the plan;

(ii) In the case of a dependent's birth, the date of such birth; and

(iii) In the case of a dependent's adoption or placement for adoption, the date of such adoption or placement for adoption.

(9) *Example.* The following example illustrates the requirements of this paragraph (b):

Example. (i) Employee *A* is hired on September 3, 1998 by Employer *X*, which has a group health plan in which *A* can elect to enroll either for employee-only coverage, for employee-plus-spouse coverage, or for family coverage, effective on the first day of any calendar quarter thereafter. *A* is married and has no children. *A* does not elect to join Employer *X*'s plan (for employee-only coverage, employee-plus-spouse coverage, or family coverage) on October 1, 1998 or January 1, 1999. On February 15, 1999, a child is placed for adoption with *A* and *A*'s spouse.

(ii) In this *Example*, the conditions for special enrollment of an employee with a new dependent under paragraph (b)(2) are satisfied, the conditions for special enrollment of an employee and a spouse with a new dependent under paragraph (b)(4) are satisfied, and the conditions for special enrollment of an employee and a new dependent under paragraph (b)(6) are satisfied. Accordingly, Employer *X*'s plan will satisfy this paragraph (b) if and only if it allows *A* to elect, by filing the required forms by March 16, 1999, to enroll in Employer *X*'s plan either with employee-only coverage, with employee-plus-spouse coverage, or with family coverage, effective as of February 15, 1999.

(c) *Notice of enrollment rights.* On or before the time an employee is offered the opportunity to enroll in a group health plan, the plan is required to provide the employee with a description of the plan's special enrollment rules under this section. For this purpose, the plan may use the following model description of the special enrollment rules under this section:

If you are declining enrollment for yourself or your dependents (including your spouse) because of other health insurance coverage, you may in the future be able to enroll yourself or your dependents in this plan, provided that you request enrollment within 30 days after your other coverage ends. In addition, if you have a new dependent as a result of marriage, birth, adoption or placement for adoption, you may be able to enroll yourself and your dependents, provided that you request enrollment within 30 days after the marriage, birth, adoption, or placement for adoption.

(d) *Special enrollment date definition.* (1) *General rule.* A special enrollment date for an individual means any date in paragraph (a)(7) or paragraph (b)(8) of this section on which the individual has a right to have enrollment in a group health plan become effective under this section.

(2) *Examples.* The following examples illustrate the requirements of this paragraph (d):

Example 1: (i) Employer *Y* maintains a group health plan that allows employees to enroll in the plan either (a) effective on the first day of employment by an election filed within three days thereafter, (b) effective on any subsequent January 1 by an election made during the preceding months of November or December, or (c) effective as of any special enrollment date described in this section. Employee *B* is hired by Employer *Y* on March 15, 1998 and does not elect to enroll in Employer *Y*'s plan until January 31, 1999 when *B* loses coverage under another plan. *B* elects to enroll in Employer *Y*'s plan effective on February 1, 1999 by filing the completed request form by January 31, 1999, in accordance with the special rule set forth in paragraph (a).

(ii) In this *Example*, *B* has enrolled on a special enrollment date because the enrollment is effective at a date described in paragraph (a)(7).

Example 2: (i) Same facts as *Example 1*, except that *B*'s loss of coverage under the other plan occurs on December 31, 1998 and *B* elects to enroll in Employer *Y*'s plan effective on January 1, 1999 by filing the completed request form by December 31, 1998, in accordance with the special rule set forth in paragraph (a).

(ii) In this *Example*, *B* has enrolled on a special enrollment date because the enrollment is effective at a date described in paragraph (a)(7) (even though this date is also a regular enrollment date under the plan).

§ 146.119 HMO affiliation period as alternative to preexisting condition exclusion.

(a) *General.* A group health plan offering health insurance coverage through an HMO, or an HMO that offers health insurance coverage in connection with a group health plan, may impose an affiliation period only if each of the requirements in paragraph (b) of this section is satisfied.

(b) *Requirements for affiliation period.* (1) No preexisting condition exclusion is imposed with respect to any coverage offered by the HMO in connection with the particular group health plan.

(2) No premium is charged to a participant or beneficiary for the affiliation period.

(3) The affiliation period for the HMO coverage is applied uniformly without regard to any health status-related factors.

(4) The affiliation period does not exceed 2 months (or 3 months in the case of a late enrollee).

(5) The affiliation period begins on the enrollment date.

(6) The affiliation period for enrollment in the HMO under a plan runs concurrently with any waiting period.

(c) *Alternatives to affiliation period.* An HMO may use alternative methods in lieu of an affiliation period to address adverse selection, as approved by the State insurance commissioner or other official designated to regulate HMOs. Nothing in this section requires a State to receive proposals for or approve alternatives to affiliation periods.

§ 146.121 Prohibiting discrimination against participants and beneficiaries based on a health status-related factor.

(a) *In eligibility to enroll*—(1) *General.* Subject to paragraph (a)(2) of this section, a group health plan, and a health insurance issuer offering group health insurance coverage in connection with a group health plan, may not establish rules for eligibility (including continued eligibility) of any individual to enroll under the terms of the plan based on any of the following health status-related factors in relation to the individual or a dependent of the individual:

(i) Health status.

(ii) Medical condition (including both physical and mental illnesses), as defined in § 146.102.

(iii) Claims experience.

(iv) Receipt of health care.

(v) Medical history.

(vi) Genetic information, as defined in § 146.102.

(vii) Evidence of insurability (including conditions arising out of acts of domestic violence).

(viii) Disability.

(2) *No application to benefits or exclusions.* To the extent consistent with section 2701 of the Act and § 146.111, paragraph (a)(1) of this section shall not be construed—

(i) To require a group health plan, or a health insurance issuer offering group health insurance coverage, to provide particular benefits other than those provided under the terms of such plan or coverage; or

(ii) To prevent such a plan or issuer from establishing limitations or restrictions on the amount, level, extent, or nature of the benefits or coverage for similarly situated individuals enrolled in the plan or coverage.

(3) *Construction.* For purposes of paragraph (a)(1) of this section, rules for eligibility to enroll include rules defining any applicable waiting (or affiliation) periods for such enrollment and rules relating to late and special enrollment.

4. *Example.* The following example illustrates the requirements of this paragraph (a):

Example. (i) An employer sponsors a group health plan that is available to all employees who enroll within the first 30 days of their employment. However, individuals who do not enroll in the first 30 days cannot enroll later unless they pass a physical examination.

(ii) In this *Example,* the plan discriminates on the basis of one or more health status-related factors.

(b) *In premiums or contributions*—(1) *General.* A group health plan, and a health insurance issuer offering health insurance coverage in connection with a group health plan, may not require an individual (as a condition of enrollment or continued enrollment under the plan) to pay a premium or contribution that is greater than the premium or contribution for a similarly situated individual enrolled in the plan based on any health status-related factor, in relation to the individual or a dependent of the individual.

(2) *Construction.* Nothing in paragraph (b)(1) of this section can be construed—

(i) To restrict the amount that an employer may be charged by an issuer for coverage under a group health plan; or

(ii) To prevent a group health plan, and a health insurance issuer offering group health insurance coverage, from establishing premium discounts or rebates or modifying otherwise applicable copayments or deductibles in return for adherence to a bona fide wellness program. For purposes of this section, a bona fide wellness program is a program of health promotion and disease prevention.

(3) *Example.* The following example illustrates the requirements of this paragraph (b):

Example. (i) Plan *X* offers a premium discount to participants who adhere to a cholesterol-reduction wellness program. Enrollees are expected to keep a diary of their food intake over 6 weeks. They periodically submit the diary to the plan physician who responds with suggested diet modifications. Enrollees are to modify their diets in accordance with the physician's recommendations. At the end of the 6 weeks, enrollees are given a cholesterol test and those who achieve a count under 200 receive a premium discount.

(ii) In this *Example,* because enrollees who otherwise comply with the program may be unable to achieve a cholesterol count under 200 due to a health status-related factor, this is not a bona fide wellness program and such discounts would discriminate impermissibly based on one or more health status-related factors. However, if, instead, individuals covered by the plan were entitled to receive the discount for complying with the diary and dietary requirements and were not required to pass a cholesterol test, the program would be a bona fide wellness program.

§ 146.125 Effective dates.

(a) *General effective dates*—(1) *Non-collectively-bargained plans.* Except as otherwise provided in this section, part A of title XXVII of the PHS Act and this part applies with respect to group health plans, including health insurance issuers offering health insurance coverage in connection with group health plans, for plan years beginning after June 30, 1997.

(2) *Collectively bargained plans.* Except as otherwise provided in this section (other than paragraph (a)(1)), in the case of a group health plan maintained under one or more collective bargaining agreements between employee representatives and one or more employers ratified before August 21, 1996, part A of title XXVII of the PHS Act and this part does not apply to plan years beginning before the later of July 1, 1997, or the date on which the last of the collective bargaining agreements relating to the plan terminates (determined without regard to any extension thereof agreed to after August 21, 1996). For these purposes, any plan amendment made under a collective bargaining agreement relating to the plan, that amends the plan solely to conform to any requirement of such part, is not treated as a termination of the collective bargaining agreement.

(3) *Preexisting condition exclusion periods for current employees.* (i) *General rule.* Any preexisting condition exclusion period permitted under § 146.111 is measured from the individual's enrollment date in the plan. This exclusion period, as limited under § 146.111, may be completed before the effective date of the Health Insurance Portability and Accountability Act of 1996 (HIPAA) for his or her plan. Therefore, on the date the individual's plan becomes subject to part A of title XXVII of the PHS Act, no preexisting condition exclusion may be imposed with respect to an individual beyond the limitation in § 146.111. For an individual who has not completed the permitted exclusion period under HIPAA, upon the effective date for his or her plan, the individual may use credible coverage that the person had as of the enrollment date to reduce the remaining preexisting condition exclusion period applicable to the individual.

(ii) *Examples.* The following examples illustrate the requirements of this paragraph (a)(3):

Example 1: (i) Individual *A* has been working for Employer *X* and has been covered under Employer *X*'s plan since March 1, 1997. Under Employer *X*'s plan, as in effect before January 1, 1998, there is no coverage for any preexisting condition. Employer *X*'s plan year begins on January 1, 1998. *A*'s enrollment date in the plan is March 1, 1997, and *A* has no credible coverage before this date.

(ii) In this *Example*, Employer *X* may continue to impose the preexisting conditions exclusion under the plan through February 28, 1998 (the end of the 12-month period using anniversary dates).

Example 2: (i) Same facts as in *Example 1*, except that *A*'s enrollment date was August 1, 1996, instead of March 1, 1997.

(ii) In this *Example*, on January 1, 1998, Employer *X*'s plan may no longer exclude treatment for any preexisting condition that *A* may have, however, because Employer *X*'s plan is not subject to HIPAA until January 1, 1998, *A* is not entitled to claim reimbursement for expenses under the plan for treatments for any preexisting condition received before January 1, 1998.

(b) *Effective date for certification requirement*—(1) *General.* Subject to the transitional rule in § 146.115(a)(5)(iii), the certification rules of § 146.115 apply to events occurring on or after July 1, 1996.

(2) *Period covered by certificate.* A certificate is not required to reflect coverage before July 1, 1996.

(3) *No certificate before June 1, 1997.* Notwithstanding any other provision of this part, in no case is a certificate required to be provided before June 1, 1997.

(c) *Limitation on actions.* No enforcement action is taken, under, against a group health plan or health insurance issuer with respect to a violation of a requirement imposed by part A of title XXVII of the PHS Act before January 1, 1998, if the plan or issuer has sought to comply in good faith with such requirements. Compliance with this part is deemed to be good faith compliance with the requirements of part A of title XXVII of the PHS Act.

(d) *Transition rules for counting creditable coverage.* An individual who seeks to establish creditable coverage for periods before July 1, 1996 is entitled to establish such coverage through the presentation of documents or other means in accordance with the provisions of § 146.115(c). For coverage relating to an event occurring before July 1, 1996, a group health plan and a health insurance issuer is not subject to any penalty or enforcement action with respect to the plan's or issuer's counting (or not counting) such coverage if the plan or issuer has sought to comply in good faith with the applicable requirements under § 146.115(c).

(e) *Transition rules for certification of creditable coverage*—(1) *Certificates only upon request.* For events occurring on or after July 1, 1996 but before October 1, 1996, a certificate is required to be provided only upon a written request by or on behalf of the individual to whom the certificate applies.

(2) *Certificates before June 1, 1997.* For events occurring on or after October 1, 1996 and before June 1, 1997, a certificate must be furnished no later than June 1, 1997, or any later date permitted under § 146.115(a)(2) (ii) and (iii).

(3) *Optional notice*—(i) *General.* This paragraph (e)(3) applies with respect to events described in § 146.115(a)(5)(ii), that occur on or after October 1, 1996 but before June 1, 1997. A group health plan or health insurance issuer offering group health coverage is deemed to satisfy §§ 146.115 (a)(2) and (a)(3) if a notice is provided in accordance with the provisions of paragraphs (e)(3)(i) through (e)(3)(iv) of this section.

(ii) *Time of notice.* The notice must be provided no later than June 1, 1997.

(iii) *Form and content of notice.* A notice provided under this paragraph (e)(3) must be in writing and must include information substantially similar to the information included in a model notice authorized by HCFA. Copies of the model notice are available at the following website—www.hcfa.gov (or call (410) 786–1565).

(iv) *Providing certificate after request.* If an individual requests a certificate following receipt of the notice, the certificate must be provided at the time of the request as set forth in § 146.115(a)(5)(iii).

(v) *Other certification rules apply.* The rules set forth in § 146.115(a)(4)(i) (method of delivery) and (a)(1) (entities required to provide a certificate) apply with respect to the provision of the notice.

Subpart C—[Reserved]

Subpart D—Preemption and Special Rules

§ 146.143 Preemption; State flexibility; construction.

(a) *Continued applicability of State law with respect to health insurance issuers.* Subject to paragraph (b) of this section and except as provided in paragraph (c) of this section, part A of title XXVII of the PHS Act is not to be construed to supersede any provision of State law which establishes, implements, or continues in effect any standard or requirement solely relating to health insurance issuers in connection with group health insurance coverage except to the extent that such standard or requirement prevents the application of a requirement of part A of title XXVII of the PHS Act.

(b) *Continued preemption with respect to group health plans.* Nothing in part A of title XXVII of the PHS Act affects or modifies the provisions of section 514 of ERISA with respect to group health plans.

(c) *Special rules*—(1) *General.* Subject to paragraph (c)(2) of this section, the provisions of part A of title XXVII of the PHS Act relating to health insurance coverage offered by a health insurance issuer supersede any provision of State law which establishes, implements, or continues in effect a standard or requirement applicable to imposition of a preexisting condition exclusion specifically governed by section 2701 of the PHS Act, which differs from the standards or requirements specified in such section.

(2) *Exceptions.* Only in relation to health insurance coverage offered by a health insurance issuer, the provisions of this part do not supersede any provision of State law to the extent that such provision—

(i) Shortens the period of time from the ''6-month period'' described in section 2701(a)(1) of the PHS Act and § 146.111(a)(1)(i) (for purposes of identifying a preexisting condition);

(ii) Shortens the period of time from the ''12 months'' and ''18 months'' described in section 2701(a)(2) of the PHS Act and § 146.111(a)(1)(ii) (for purposes of applying a preexisting condition exclusion period);

(iii) Provides for a greater number of days than the ''63-day period'' described in sections 2701 (c)(2)(A) and (d)(4)(A) of the PHS Act and §§ 146.111(a)(1)(iii) and 146.113 (for purposes of applying the break in coverage rules);

(iv) Provides for a greater number of days than the ''30-day period'' described in sections 2701 (b)(2) and (d)(1) of the PHS Act and § 146.111(b) (for purposes of the enrollment period and preexisting condition exclusion periods for certain newborns and children that are adopted or placed for adoption);

(v) Prohibits the imposition of any preexisting condition exclusion in cases not described in section 2701(d) of the PHS Act or expands the exceptions described in that section;

(vi) Requires special enrollment periods in addition to those required under section 2701(f) of the PHS Act; or

(vii) Reduces the maximum period permitted in an affiliation period under section 701(g)(1)(B).

(d) *Definitions*—(1) *State law.* For purposes of this section the term ''State law'' includes all laws, decisions, rules, regulations, or other State action having the effect of law, of any State. A law of the United States applicable only to the District of Columbia is treated as a State law rather than a law of the United States.

(2) *State.* For purposes of this section the term ''State'' includes a State, the Northern Mariana Islands, any political subdivisions of a State or such Islands, or any agency or instrumentality of either.

§ 146.145 Special rules relating to group health plans.

(a) *General exception for certain small group health plans.* The requirements of this part do not apply to any group health plan (and group health insurance coverage offered in connection with a group health plan) for any plan year if, on the first day of the plan year, the plan has fewer than 2 participants who are current employees.

(b) *Excepted benefits*—(1) *General.* The requirements of subpart B of this part do not apply to any group health plan (or any group health insurance coverage offered in connection with a group health plan) in relation to its provision of the benefits described in paragraph (b)(2), (3), (4), or (5) of this section (or any combination of these benefits).

(2) *Benefits excepted in all circumstances.* The following benefits are excepted in all circumstances:

(i) Coverage only for accident (including accidental death and dismemberment).

(ii) Disability income insurance.

(iii) Liability insurance, including general liability insurance and automobile liability insurance.

(iv) Coverage issued as a supplement to liability insurance.

(v) Workers' compensation or similar insurance.

(vi) Automobile medical payment insurance.

(vii) Credit-only insurance (for example, mortgage insurance).

(viii) Coverage for on-site medical clinics.

(3) *Limited excepted benefits*—(1) *General.* Limited-scope dental benefits, limited-scope vision benefits, or long-term care benefits are excepted if they are provided under a separate policy, certificate, or contract of insurance, or are otherwise not an integral part of the plan, as defined in paragraph (b)(3)(ii) of this section.

(ii) *Integral.* For purposes of paragraph (b)(3)(i) of this section, benefits are deemed to be an integral part of a plan unless a participant has the right to elect not to receive coverage for the benefits and, if the participant elects to receive coverage for the benefits, the participant pays an additional premium or contribution for that coverage.

(iii) *Limited scope.* Limited scope dental or vision benefits are dental or vision benefits that are sold under a separate policy or rider and that are limited in scope to a narrow range or type of benefits that are generally excluded from hospital/medical/surgical benefits packages.

(iv) *Long-term care.* Long-term care benefits are benefits that are either—

(A) Subject to State long-term care insurance laws;

(B) For qualified long-term care insurance services, as defined in section 7702B(c)(1) of the Internal Revenue Code, or provided under a qualified long-term care insurance contract, as defined in section 7702B(b) of the Internal Revenue Code; or

(C) based on cognitive impairment or a loss of functional capacity that is expected to be chronic.

(4) *Noncoordinated benefits*—(i) *Excepted benefits that are not coordinated.* Coverage for only a specified disease or illness (for example, cancer-only policies) or hospital indemnity or other fixed dollar indemnity insurance (for example, $100/day) is expected only if it meets each of the conditions specified in paragraph (b)(4)(ii) of this section.

(ii) *Conditions.* Benefits are described in paragraph (b)(4)(i) of this section only if—

(A) The benefits are provided under a separate policy, certificate, or contract of insurance;

(B) There is no coordination between the provision of the benefits and an exclusion of benefits under any group health plan maintained by the same plan sponsor; and

(C) The benefits are paid with respect to an event without regard to whether benefits are provided with respect to the event under any group health plan maintained by the same plan sponsor.

(5) *Supplemental benefits.* The following benefits are excepted only if they are provided under a separate policy, certificate, or contract of insurance:

(i) Medicare supplemental health insurance (as defined under section 1882(g)(1) of the Social Security Act; also known as Medigap or MedSupp insurance),

(ii) Coverage supplemental to the coverage provided under Chapter 55, Title 10 of the United States Code (also known as CHAMPUS supplemental programs), and

(iii) Similar supplemental coverage provided to coverage under a group health plan.

Subpart E—Provisions Applicable to Only Health Insurance Issuers

§ 146.150 Guaranteed availability of coverage for employers in the small group market.

(a) *Issuance of coverage in the small group market.* Subject to paragraphs (c) through (f) of this section, each health insurance issuer that offers health insurance coverage in the small group market in a State must—

(1) Offer, to any small employer in the State, all products that are approved for sale in the small group market and that the issuer is actively marketing, and must accept any employer that applies for any of those products; and

(2) Accept for enrollment under the coverage every eligible individual (as defined in paragraph (b) of this section) who applies for enrollment during the period in which the individual first becomes eligible to enroll under the terms of the group health plan, or during a special enrollment period, and may not impose any restriction on an eligible individual, which is inconsistent with the nondiscrimination provisions of § 146.121 on an eligible individual being a participant or beneficiary.

(b) *Eligible individual defined.* For purposes of this section, the term ''eligible individual'' means an individual who is eligible—

(1) To enroll in group health insurance coverage offered to a group health plan maintained by a small employer, in accordance with the terms of the group health plan;

(2) For coverage under the rules of the health insurance issuer which are uniformly applicable in the State to small employers in the small group market, and

(3) For coverage in accordance with all applicable State laws governing the issuer and the small group market.

(c) *Special rules for network plans.* (1) In the case of a health insurance issuer that offers health insurance coverage in the small group market through a network plan, the issuer may—

(i) Limit the employers that may apply for the coverage to those with eligible individuals who live, work, or reside in the service area for the network plan; and

(ii) Within the service area of the plan, deny coverage to employers if the issuer has demonstrated to the applicable State authority (if required by the State authority) that—

(A) It will not have the capacity to deliver services adequately to enrollees of any additional groups because of its obligations to existing group contract holders and enrollees; and

(B) It is applying this paragraph (c)(1) uniformly to all employers without regard to the claims experience of those employers and their employees (and their dependents) or any health status-related factor relating to those employees and dependents.

(2) An issuer that denies health insurance coverage to an employer in any service area in accordance with paragraph (c)(1)(ii) of this section, may not offer coverage in the small group market within the service area to any employer for a period of 180 days after the date the coverage is denied. This paragraph (c)(2) does not limit the issuer's ability to renew coverage already in force or relieve the issuer of the responsibility to renew that coverage.

(3) Coverage offered within a service area after the 180-day period specified in paragraph (c)(2) of this section is subject to the requirements of this section.

(d) *Application of financial capacity limits.* (1) A health insurance issuer may deny health insurance coverage in the small group market if the issuer has demonstrated to the applicable State authority (if required by the State authority) that it—

(i) Does not have the financial reserves necessary to underwrite additional coverage; and

(ii) Is applying this paragraph (d)(1) uniformly to all employers in the small group market in the State consistent with applicable State law and without regard to the claims experience of those employers and their employees (and their dependents) or any health status-related factor relating to those employees and dependents.

(2) An issuer that denies group health insurance coverage to any small employer in a State in accordance with paragraph (d)(1) of this section may not offer coverage in connection with group health plans in the small group market in the State for a period of 180 days after the later of the date—

(i) The coverage is denied; or

(ii) The issuer demonstrates to the applicable State authority, if required under applicable State law, that the issuer has sufficient financial reserves to under write additional coverage.

(3) Paragraph (d)(2) of this section does not limit the issuer's ability to renew coverage already in force or relieve the issuer of the responsibility to renew that coverage.

(4) Coverage offered after the 180-day period specified in paragraph (d)(2) of this section, is subject to the requirements of this section.

(5) An applicable State authority may provide for the application of this paragraph (d) of this section on a service-area-specific basis.

(e) *Exception to requirement for failure to meet certain minimum participation or contribution rules.*

(1) Paragraph (a) of this section does not preclude a health insurance issuer from establishing employer contribution rules or group participation rules for the offering of health insurance coverage in connection with a group health plan in the small group market, as allowed under applicable State law.

(2) For purposes of paragraph (e)(1) of this section—

(i) The term ''employer contribution rule'' means a requirement relating to the minimum level or amount of employer contribution toward the premium for enrollment of participants and beneficiaries; and

(ii) The term ''group participation rule'' means a requirement relating to the minimum number of participants or beneficiaries that must be enrolled in relation to a specified percentage or number of eligible individuals or employees of an employer.

(f) *Exception for coverage offered only to bona fide association members.* Paragraph (a) of this section does not apply to health insurance coverage offered by a health insurance issuer if that coverage is made available in the small group market only through one or more bona fide associations (as defined in 45 CFR 144.103).

§ 146.152 Guaranteed renewability of coverage for employers in the group market.

(a) *General rule.* Subject to paragraphs (b) through (d) of this section, a health insurance issuer offering health insurance coverage in the small or large group market is required to renew or continue in force the coverage at the option of the plan sponsor.

(b) *Exceptions.* An issuer may nonrenew or discontinue group health insurance coverage offered in the small or large group market based only on one or more of the following:

(1) *Nonpayment of premiums.* The plan sponsor as failed to pay premiums or contributions in accordance with the terms of the health insurance coverage, including any timeliness requirements.

(2) *Fraud.* The plan sponsor has performed an act or practice that constitutes fraud or made an intentional misrepresentation of material fact in connection with the coverage.

(3) *Violation of participation or contribution rules.* The plan sponsor has failed to comply with a material plan provision relating to any employer contribution or group participation rules permitted under § 146.150(e) in the case of the small group market or under applicable State law in the case of the large group market.

(4) *Termination of plan.* The issuer is ceasing to offer coverage in the market in accordance with paragraphs (c) and (d) of this section and applicable State law.

(5) *Enrollees' movement outside service area.* For network plans, there is no longer any enrollee under the group health plan who lives, resides, or works in the service area of the issuer (or in the area for which the issuer is authorized to do business); and in the case of the small group market, the issuer applies the same criteria it would apply in denying enrollment in the plan under § 146.150(c).

(6) *Association membership ceases.* For coverage made available in the small or large group market only through one or more bona fide associations, if the employer's membership in the association ceases, but only if the coverage is terminated uniformly without regard to any health status-related factor relating to any covered individual.

(c) *Discontinuing a particular product.* In any case in which an issuer decides to discontinue offering a particular product offered in the small or large group market, that product may be discontinued by the issuer in accordance with applicable State law in the particular market only if—

(1) The issuer provides notice in writing to each plan sponsor provided that particular product in that market (and to all participants and beneficiaries covered under such coverage) of the discontinuation at least 90 days before the date the coverage will be discontinued;

(2) The issuer offers to each plan sponsor provided that particular product the option, on a guaranteed issue basis, to purchase all (or, in the case of the large group market, any) other health insurance coverage currently being offered by the issuer to a group health plan in that market; and

(3) In exercising the option to discontinue that product and in offering the option of coverage under paragraph (c)(2) of this section, the issuer acts uniformly without regard to the claims experience of those sponsors or any health status-related factor relating to any participants or beneficiaries covered or new participants or beneficiaries who may become eligible for such coverage.

(d) *Discontinuing all coverage.* An issuer may elect to discontinue offering all health insurance coverage in the small or large group market or both markets in a State in accordance with applicable State law only if—

(1) The issuer provides notice in writing to the applicable State authority and to each plan sponsor (and all participants and beneficiaries covered under the coverage) of the discontinuation at least 180 days prior to the date the coverage will be discontinued; and

(2) All health insurance policies issued or delivered for issuance in the State in the market (or markets) are discontinued and not renewed.

(e) *Prohibition on market reentry.* An issuer who elects to discontinue offering all health insurance coverage in a market (or markets) in a State as described in paragraph (d) of this section may not issue coverage in the market (or markets) and State involved during the 5-year period beginning on the date of discontinuation of the last coverage not renewed.

(f) *Exception for uniform modification of coverage.* Only at the time of coverage renewal may issuers modify the health insurance coverage for a product offered to a group health plan in the—

(1) Large group market; and

(2) Small group market if, for coverage available in this market (other than only through one or more bona fide associations), the modification is consistent with State law and is effective uniformly among group health plans with that product.

(g) *Application to coverage offered only through associations.* In the case of health insurance coverage that is made available by a health insurance issuer in the small or large group market to employers only through one or more associations, the reference to ''plan sponsor'' is deemed, with respect to coverage provided to an employer member of the association, to include a reference to such employer.

§ 146.160 Disclosure of information.

(a) *General rule.* In connection with the offering of any health insurance coverage to a small employer, a health insurance issuer is required to—

(1) Make a reasonable disclosure to the employer, as part of its solicitation and sales materials, of the availability of information described in paragraph (b) of this section; and

(2) Upon request of the employer, provide that information to the employer.

(b) *Information described.* Subject to paragraph (d) of this section, information that must be provided under paragraph (a)(2) of this section is information concerning the following:

(1) Provisions of coverage relating to the following:

(i) The issuer's right to change premium rates and the factors that may affect changes in premium rates.

(ii) Renewability of coverage.

(iii) Any preexisting condition exclusion, including use of the alternative method of counting creditable coverage.

(iv) Any affiliation periods applied by HMOs.

(v) The geographic areas served by HMOs.

(2) The benefits and premiums available under all health insurance coverage for which the employer is qualified, under applicable State law. See § 146.150(b) through (f) for allowable limitations on product availability.

(c) *Form of information.* The information must be described in language that is understandable by the average small employer, with a level of detail that is sufficient to reasonably inform small employers of their rights and obligations under the health insurance coverage. This requirement is satisfied if the issuer provides each of the following with respect to each product offered:

(1) An outline of coverage. For purposes of this section, outline of coverage means a description of benefits in summary form.

(2) The rate or rating schedule that applies to the product (with and without the preexisting condition exclusion or affiliation period).

(3) The minimum employer contribution and group participation rules that apply to any particular type of coverage.

(4) In the case of a network plan, a map or listing of counties served.

(5) Any other information required by the State.

(d) *Exception.* An issuer is not required to disclose any information that is proprietary and trade secret information under applicable law.

Subpart F—Exclusion of Plans and Enforcement

§ 146.180 Treatment on non-Federal governmental plans.

The plan sponsor of a non-Federal governmental plan may elect to be exempted from any or all of the requirements identified in paragraph (a) of this section with respect to any portion of its plan that is not provided through health insurance coverage, if the election complies with the requirements of paragraphs (b) and (c) of this section. The election remains in effect for the period described in paragraph (d) of this section.

(a) *Exemption from requirements.* The election described in this paragraph (a) exempts a non-Federal governmental plan from the following requirements:

(1) Limitations on preexisting condition exclusion periods (§ 146.111).

(2) Special enrollment periods for individuals (and dependents) losing other coverage (§ 146.117).

(3) Prohibitions against discriminating against individual participants and beneficiaries based on health status (§ 146.121).

(4) Standards relating to benefits for mothers and newborns (section 2704 of the PHS Act).

(5) Parity in the application of certain limits to mental health benefits (section 2705 of the PHS Act).

(b) *Form and manner of election.* (1) The election must be in writing.

(2) The election document must include as an attachment a copy of the notice described in paragraphs (f) and (g) of this section.

(3) The election document must state the name of the plan and the name and address of the plan administrator.

(4) The election document must either state that the plan does not include health insurance coverage, or identify which portion of the plan is not funded through insurance.

(5) The election must be made in conformity with all the plan sponsor's rules, including any public hearing, if required, and the election document must certify that the person signing the election document, including if applicable a third party plan administrator, is legally authorized to do so by the plan sponsor.

(6) The election document must be signed by the person described in paragraph (b)(5) of this section.

(c) *Timing of election.* (1) For plans not subject to collective bargaining agreements, the election must be received by HCFA by the day preceding the beginning date of the plan year.

(2) For plans provided under a collective bargaining agreement, the election must be received by HCFA no later than 30 days after—

(i) The date of the agreement between the governmental entity and union officials; or

(ii) If applicable, ratification of the agreement.

(3) HCFA may extend the deadlines specified under paragraphs (c)(1) and (c)(2) of this section for good cause.

(4) If the plan sponsor fails to file a timely election in accordance with paragraphs (c)(1) through (c)(3) of this section, the plan is subject to the

requirements described in paragraph (a) for the entire plan year, or, in the case of a plan provided under a collective bargaining agreement, for the term of the agreement.

(d) *Period of election.* An election under paragraph (a) of this section applies—

(1) For a single specified plan year; or

(2) In the case of a plan provided under a collective bargaining agreement, for the term of the agreement. (For purposes of this section, if a collective bargaining agreement expires during the bargaining process for a new agreement, and the parties agree that the prior bargaining agreement continues in effect until the new agreement takes effect, the ''term of the agreement'' is deemed to continue until the new agreement takes effect.)

(e) *Subsequent elections.* An election under this section may be extended through subsequent elections.

(f) *Notice to participants.* (1) A plan that makes the election described in this section notifies the participant of the election, and explains the consequences of the election. This notice must be provided—

(i) to each participant at the time of enrollment under the plan; and

(ii) To all participants on an annual basis.

(2) The notice shall be in writing, and must include the information specified in paragraph (g) of this section.

(3) The notice shall be provided to each participant individually.

(4) Subject to paragraph (g) of this section, the requirements of paragraphs (f)(1) through (f)(3) of this section are considered to have been met if the notice is prominently printed in the summary plan document, or equivalent document, and each participant receives a copy of that document at the time of enrollment and annually thereafter.

(g) *Notice content.* The notice must contain at least the following information:

(1) A statement that, in general, Federal law imposes upon group health plans the requirements described in paragraph (a) of this section (which must be individually described in the notice).

(2) A statement that Federal law gives the plan sponsor of a non-Federal governmental plan the right to exempt the plan in whole or in part from the requirements described in paragraph (a) of this section, and that the plan sponsor has elected to do so.

(3) A statement identifying which parts of the plan are subject to the election, and each of the requirements of paragraph (a) of this section from which the plan sponsor has elected to be exempted.

(4) If the plan chooses to provide any of the protections of paragraph (a) of this section voluntarily, or is required to under State law, a statement identifying which protections apply.

(h) *Certification and disclosure of creditable coverage.* Notwithstanding an election under this section, a non-Federal governmental plan must provide for certification and disclosure of creditable coverage under the plan with respect to participants and their dependents in accordance with § 146.115.

(i) *Effect of failure to comply with election requirements.* (1) Subject to paragraph (i)(2) of this section, a plan's failure to comply with the requirements of paragraphs (f) through (h) of this section invalidates an election made under this section.

(2) Upon a finding by HCFA that a non-Federal governmental plan has failed to comply with the requirements of paragraphs (f) through (h), and has failed to correct the noncompliance within 30 days (as provided in § 146.184(d) (7)(iii)(B)), HCFA notifies the plan that its election has been invalidated and that it is subject to the requirements of this part.

(3) A non-Federal governmental plan described in paragraph (i)(2) of this section that fails to comply with the requirements of this part is subject to Federal enforcement by HCFA under § 146.184, including appropriate civil money penalties.

§ 146.184 Enforcement.

(a) *Enforcement with respect to group health plans*—(1) *Scope.* In general, the requirements of the Health Insurance Portability and Accountability Act that apply to group health plans are contained in part 7 of subtitle B of title I of ERISA, and in subtitle K of the Internal Revenue Code. They are enforced by the Secretary of Labor under part 5 of subtitle B of title I of ERISA, and the Secretary of the Treasury under 26 U.S.C. 4980D. However, the provisions that apply to group health plans that are non-Federal governmental plans are contained in title XXVII of the PHS Act, and enforced by HCFA. The provisions of title XXVII that apply to health insurance issuers that offer coverage in connection with any group health plan are enforced in the first instance by the States. If HCFA determines under paragraph (b) of this section that a State is not substantially enforcing the provisions, HCFA enforces them under paragraph (d) of this section.

(2) *Non-Federal governmental plans.* Requirements of this part that apply to group health plans that are non-Federal governmental plans (sponsored by a State or local governmental entity) are enforced by HCFA, as provided in paragraph (d) of this section.

(b) *Enforcement with respect to health insurance issuers*—(1) *General rule—enforcement by State.* Except as provided in paragraph (b)(2) of this section, each State enforces the requirements of this part with respect to health insurance issuers that issue, sell, renew or offer health insurance coverage in the small or large group markets in the State.

(2) *Enforcement by HCFA.* HCFA enforces the provisions of this part with respect to health insurance issuers, using the procedures described in paragraph (d) of this section, only in the following circumstances:

(i) *State election.* If the State chooses not to enforce the Federal requirements.

(ii) *State failure to enforce.* If HCFA makes a determination under paragraph (c) of this section that a State has failed to substantially enforce one or more provisions of this part.

(c) *Determination by Administrator.* if HCFA receives information, through a complaint or any other means, that raises a question whether a State is substantially enforcing one or more provisions of this part, HCFA follows the procedures set forth in this section.

(1) *Verification of exhaustion.* HCFA makes a threshold determination of whether the individuals affected by the alleged failure to enforce have made a reasonable effort to exhaust any State remedies. This may involve informal contact with State officials about the questions raised.

(2) *Notice to the State.* If HCFA is satisfied that there is a reasonable question whether there has been a failure to substantially enforce, HCFA provides notice as specified in paragraph (c)(3) of this section, to the following State officials:

(i) The Governor or chief executive officer of the State.

(ii) The insurance commissioner or chief insurance regulatory official.

(iii) The official responsible for regulating HMOs, if different than paragraph (c)(2)(ii) of this section, but only if the alleged failure involves HMOs.

(3) *Form and content of notice.* The notice described in paragraph (c)(2) is in writing, and does the following:

(i) Identifies the provision or provisions of the statute and regulations that have allegedly been violated;

(ii) Describes the facts of the specific violations.

(iii) Explains that the consequence of a failure to substantially enforce any provisions(s) is that HCFA enforces the provision(s) in accordance with paragraph (d) of this section.

(iv) Advises the State that it has 45 days to respond to the notice, unless the time is extended as described in paragraph (c)(3) of this section, and that the response should include any information that the State wishes HCFA to consider in making the preliminary determination described in paragraph (c)(5) of this section.

(4) *Good cause.* The time for responding can be extended for good cause. Examples of good cause include an agreement between HCFA and the State that there should be a public hearing on the State's enforcement, or evidence that the State is undertaking expedited enforcement activities.

(5) *Preliminary determination.* If at the end of the 45-day period, and any extension, the State has not established to HCFA's satisfaction that it is substantially enforcing the provision or provisions described in the notice, HCFA takes the following actions:

(i) Consults with the officials described in paragraph (c)(1) of this section.

(ii) Notifies the State of HCFA's preliminary determination that the State has failed to enforce the provisions, and that the failure is continuing.

(iii) Permits the State a reasonable opportunity to show evidence of substantial enforcement.

(6) *Final determination.* If, after providing notice and the opportunity to enforce under paragraph (c)(5) of this section, HCFA finds that the failure to enforce has not been corrected, HCFA sends the State a written notice of that final determination. The notice—

(i) Identifies the provisions with respect to which HCFA is taking over enforcement;

(ii) States the effective date of HCFA's enforcement;

(iii) Informs the State of the mechanism for establishing in the future that it has corrected the failure, and has begun enforcement. This mechanism will include transition procedures for ending HCFA's enforcement.

(d) *Civil money penalties*—(1) *General rule.* If any health insurance issuer that is subject to HCFA's enforcement authority under paragraph (b)(2) of this section, or any non-Federal governmental plan (or employer that sponsors a non-Federal governmental plan) that is subject to HCFA's enforcement authority under paragraph (a)(2) of this section, fails to comply with any applicable requirement of this part, if may be subject to a civil money penalty as described in this paragraph (d).

(2) *Complaint.* Any person who is entitled to any right under this part, and who believes that the right is being denied as a result of any failure described in paragraph (d)(1) of this section, may file a complaint with HCFA. Based on the complaint, HCFA identifies which entities are potentially responsible for the violation, in accordance with paragraph (d)(3) of this section.

(3) *Determination of responsible entity.* If a failure to comply is established under this section, the responsible entity, as determined under this paragraph, is liable for the penalty. If the violation is due to a failure by—

(i) A health insurance issuer, the issuer is the responsible entity;

(ii) A group health plan that is a non-Federal governmental plan sponsored by a single employer, the employer is the responsible entity;

(iii) A group health plan that is a non-Federal governmental plan sponsored by two or more employers, the plan is the responsible entity.

(4) *Notice to responsible entities.* HCFA provides notice to the appropriate entity or entities identified under paragraph (d)(3) of this section that a complaint or other information has been received alleging a violation of this part. The notice—

(i) Describes the substance of any complaint or other allegation;

(ii) Provides 30 days for the responsible entity or entities to respond with additional information. This can include—

(A) Information refuting that there has been a violation;

(B) Evidence that the entity did not know, and exercising due diligence could not have known, of the violation;

(C) Evidence of a previous record of compliance.

(5) *Notice to other regulators.* HCFA notifies the State if the alleged violation involves a health insurance issuer under its jurisdiction.

(6) *Notice of assessment.* If, based on the information provided in the complaint, as well as any information submitted by the entity or any other parties, HCFA proposes to assess a civil money penalty, HCFA sends written notice of assessment to the responsible entity or entities by certified mail, return receipt requested. The notice contains the following information:

(i) A reference to the provision that was violated.

(ii) The name or names of the individuals with respect to whom a violation occurred, with relevant identification numbers.

(iii) The facts that support the finding of a violation, and the initial date of the violation.

(iv) The amount of the proposed penalty as of the date of the notice.

(v) The basis for calculating the penalty, including consideration of prior compliance.

(vi) Instructions for responding to the notice, including—

(A) A specific statement of the respondent's right to a hearing; and

(B) A statement that failure to request a hearing within 30 days permits the imposition of the proposed penalty, without right of appeal.

(7) *Amount of penalty*—(i) *Maximum daily penalty.* The penalty cannot exceed $100 for each day, for each responsible entity, for each individual with respect to whom such a failure occurs.

(ii) *Standard for calculating daily penalty.* In calculating the amount of the penalty HCFA takes into account the responsible entity's previous record of compliance and the gravity of the violation.

(iii) *Limitations on penalties.* No civil money penalty is imposed:

(A) With respect to a period during which a failure existed, but none of the responsible entities knew, or exercising reasonable diligence would have known, that the failure existed.

(B) With respect to the period occurring immediately after the period described in paragraph (d)(7)(iii)(A) of this section, if the failure—

(*1*) Was due to reasonable cause and was not due to willful neglect; and

(*2*) Was corrected within 30 days of the first day that any of the entities against whom the penalty would be imposed knew, or exercising reasonable diligence would have known, that the failure existed.

(C) The burden is on the responsible entity or entities to establish to the satisfaction of HCFA that none of the entities knew, or exercising reasonable diligence could have known that the failure existed.

(8) *Hearings*—(i) *Right to a hearing.* Any entity against which a penalty is assessed may request a hearing by HCFA. The request must be in writing, and must be postmarked within 30 days after the date the notice of assessment is issued.

(ii) *Failure to request a hearing.* If no hearing is requested under this paragraph, the notice of assessment constitutes a final order that is not subject to appeal.

(iii) *Parties to the hearing.* Parties to the hearing include any responsible entities, as well as the party who filed the complaint. An informational notice

is also sent to the State, or to the Secretaries of Labor and the Treasury, as appropriate.

(iv) *Initial agency decision*. The initial agency decision is made by an administrative law judge. The decision is made on the record according to section 554 of title 5, United States Code. The decision becomes a final, appealable order after 30 days, unless it is modified in accordance with paragraph (d)(8)(v) of this section.

(v) *Review by HCFA*. HCFA may modify or vacate the initial agency decision. Notice of intent to modify or vacate the decision is issued to the parties within 30 days after the date of the decision of the administrative law judge.

(9) *Judicial review*—(i) *Filing of action for review*. Any entity against whom a final order imposing a civil money penalty is entered in accordance with paragraph (d)(8) of this section may obtain review in the United States District Court for any district in which the entity is located or the United States District Court for the District of Columbia by—

(A) Filing a notice of appeal in that court within 30 days from the date of a final order; and

(B) Simultaneously sending a copy of the notice of appeal by registered mail to HCFA.

(ii) *Certification of administrative record*. HCFA will promptly certify and file with the court the record upon which the penalty was imposed.

(iii) *Standard of review*. The findings of HCFA may not be set aside unless they are found to be unsupported by substantial evidence, as provided by Section 706(2) (E) of title 5, United States Code.

(iv) *Appeal*. Any final decision, order or judgement of the district court concerning the Administrator's review is subject to appeal as provided in Chapter 83 of Title 28, United States Code.

(10) *Failure to pay assessment, maintenance of action*—(i) *Failure to pay assessment*. If any entity fails to pay an assessment after it becomes a final order under paragraphs (d)(7)(i)(A) or (d)(7)(iii) of this section, or after the court has entered final judgment in favor of HCFA, HCFA refers the matter to the Attorney General, who brings an action in the appropriate United States district court to recover the amount assessed.

(ii) *Final order not subject to review*. In an action brought under paragraph (d)(10)(i) of this section, the validity and appropriateness of the final order described in paragraphs (d)(7)(i)(A) or (d)(7)(iii) of this section is not subject to review.

(11) *Use of penalty funds*. (i) Any funds collected under this section will be paid to HCFA or other office imposing the penalty.

(ii) The funds will be available without appropriation and until expended.

(iii) The funds may only be used for the purpose of enforcing the provisions with respect to which the penalty was imposed.

PARTS 147—199 [RESERVED]

Authority: Secs. 2701 through 2723, 2791, and 2792 of the PHS Act, 42 U.S.C. 300gg–41 through 300gg–63, 300gg–91, and 300gg–92.

Dated: March 25, 1997.

Bruce C. Vladeck,

Administrator, Health Care Financing Administration.

Dated: March 25, 1997.

Donna E. Shalala,

Secretary.

[FR Doc. 97–8275 Filed 4–1–97; 12:42 pm]

BILLING CODE 4120–01–M; 4830–01–M; 4510–29–M

DEPARTMENT OF THE TREASURY

Internal Revenue Service

26 CFR Part 54

[Reg–253578–96]

RIN 1545–AV12

Health Insurance Portability for Group Health Plans

AGENCY: Internal Revenue Service (IRS), Treasury.

ACTION: Notice of proposed rulemaking by cross-reference to temporary regulations.

SUMMARY: Elsewhere in this issue of the **Federal Register**, the IRS is issuing temporary regulations relating to group health plan portability, access, and renewability requirements added to the Internal Revenue Code by section 401 of the Health Insurance Portability and Accountability Act of 1996 (HIPAA). The IRS is issuing the temporary regulations at the same time that the Pension and Welfare Benefits Administration of the U.S. Department of Labor and the Health Care Financing Administration of the U.S. Department of Health and Human Services are issuing substantially similar interim final regulations relating to the group health plan portability, access, and renewability requirements added by HIPAA to the Employee Retirement Income Security Act of 1974 and the Public Health Service Act. The temporary regulations provide guidance to employers and group health plans relating to the obligation of plans to comply with new requirements relating to preexisting condition exclusions, discrimination based on health status, access to coverage, and other requirements. The text of those temporary regulations also serves as the text of these proposed regulations.

DATES: Written comments and requests for a public hearing must be received by July 7, 1997.

ADDRESSES: Send submissions to: CC:DOM:CORP:R (REG–253578–96), room 5226, Internal Revenue Service, POB 7604, Ben Franklin Station, Washington, DC 20044. Submissions may be hand delivered to: CC:DOM:CORP:R (REG–253578–96), room 5226, Internal Revenue Service, 1111 Constitution Avenue, NW, Washington, DC. Alternatively, taxpayers may submit comments electronically via the Internet by selecting the ''Tax Regs'' option on the IRS Home Page, or by submitting comments directly to the IRS Internet site at http://www.irs.ustreas.gov/prod/tax__regs/comments.html

FOR FURTHER INFORMATION CONTACT: Concerning the regulations, Russ Weinheimer, (202) 622–4695; concerning submissions or to request a hearing, Christina D. Vasquez, 202–622–7180. These are not toll-free numbers.

SUPPLEMENTARY INFORMATION:

Paperwork Reduction Act

The collection of information referenced in this notice of proposed rulemaking has been submitted to the Office of Management and Budget for review in accordance with the Paperwork Reduction Act of 1995 (44 U.S.C. 3507(d)).

An agency may not conduct or sponsor, and a person is not required to respond to, a collection of information unless it displays a valid control number assigned by the Office of Management and Budget.

The collection of information is in §§ 54.9801–3T, 54.9801–4T, 54.9801–5T, 54.9801–6T, and 54.9806–1T (see the temporary regulations published elsewhere in this issue of the **Federal Register**). This information is required by the statute so that participants will be informed about their rights under HIPAA and about the amount of creditable coverage that they have accrued under a group health plan. The likely respondents are business or other for-profit institutions, nonprofit institutions, small businesses or organizations, and Taft-Hartley trusts. Responses to this collection of information are mandatory.

Books or records relating to a collection of information must be retained as long as their contents may become material in the administration of any internal revenue law. Generally tax returns and tax return information are confidential, as required by 26 U.S.C. 6103.

Comments on the collection of information should be sent to the Office of Management and Budget, Attn: Desk Officer for the Department of the Treasury, Office of Information and Regulatory Affairs, Washington, DC 20503, with copies to the Internal Revenue Service, Attn: IRS Reports Clearance Officer, T:FP, Washington, DC 20224. Comments on the collection of information should be received by June 9, 1997. Comments are specifically requested concerning:

Whether the proposed collection of information is necessary for the proper performance of the functions of the Internal Revenue Service, including whether the information will have practical utility;

The accuracy of the estimated burden associated with the proposed collection of information (see the preamble to the temporary regulations published elsewhere in this issue of the **Federal Register**);

How to enhance the quality, utility, and clarity of the information to be collected;

How to minimize the burden of complying with the proposed collection of information, including the application of automated collection techniques or other forms of information technology; and

Estimates of capital or start-up costs and costs of operation, maintenance, and purchase of services to provide information.

Background

The temporary regulations published elsewhere in this issue of the **Federal Register** add §§ 54.9801–1T through 54.9801–6T, 54.9802–1T, 54.9804–1T, and 54.9806–1T to the Miscellaneous Excise Tax Regulations. These regulations are being published as part of a joint rulemaking with the Department of Labor and the Department of Health and Human Services (the joint rulemaking).

The text of those temporary regulations also serves as the text of these proposed regulations. The preamble to the temporary regulations explains the temporary regulations.

Special Analyses

Pursuant to sections 603(a) and 605(b) of the Regulatory Flexibility Act, it is hereby certified that the collection of information referenced in this notice of proposed rulemaking (see §§ 54.9801–3T, 54.9801–4T, 54.9801–5T, 54.9801–6T and 54.9806–1T of the temporary regulations published elsewhere in this issue of the **Federal Register**) will not have a significant economic impact on a substantial number of small entities. Although a substantial number of small entities will be subject to the collection of information requirements in these regulations, the requirements will not have a significant economic impact on these entities. The average time required to complete a certification required under these regulations is estimated to be 5 to 12 minutes for all employers. This average is based on the assumption that most employers will automate the certification process. The paperwork requirements other than certifications that are contained in the regulations are estimated to impose less than 10% of the burden imposed by the certifications. Many small employers that maintain group health plans have their plans administered by an

insurance company or third party administrators (TPAs). Most insurers and TPAs are expected to automate the certification process and therefore their average time to produce a certificate should be similar to the 5 to 12 minute average estimated for all employers. However, even for small employers that do not automate the certification process, the collection of information requirements in the regulation will not have a significant impact. Even if it is conservatively assumed that their average time to produce a certificate is 3 times as long as the highest estimate for all employers (i.e., 36 minutes per certificate) and that all of their employees are covered by their group health plan and that half of the employees receive a certificate each year, and this figure is then increased by 10% to account for the paperwork burdens apart from the certifications, the average burden per employee is only 20 minutes per year. Thus, for example, for an employer with 10 employees, the annual burden would be 3 hours and 20 minutes per year. At an estimated cost of $11 per hour, this would result in a cost of less than $37 per year for the employer, which is not a significant economic impact.

This regulation is not subject to the Unfunded Mandates Reform Act of 1995 because the regulation is an interpretive regulation. For further information and for analyses relating to the joint rulemaking, see the preamble to the joint rulemaking. Pursuant to section 7805(f) of the Internal Revenue Code, this notice of proposed rulemaking will be submitted to the Chief Counsel for Advocacy of the Small Business Administration for comment on its impact on small business.

Comments and Requests for a Public Hearing

Before these proposed regulations are adopted as final regulations, consideration will be given to any written comments (a signed original and eight (8) copies) that are submitted timely to the IRS. All comments will be available for public inspection and copying. A public hearing may be scheduled if requested in writing by a person that timely submits written comments. If a public hearing is scheduled, notice of the date, time, and place for the hearing will be published in the **Federal Register**.

Drafting Information

The principal author of these proposed regulations is Russ Weinheimer, Office of the Chief Counsel, Employee Benefits and Exempt Organizations. However, other personnel from the IRS and Treasury Department participated in their development. The proposed regulations, as well as the temporary regulations, have been developed in coordination with personnel from the U.S. Department of Labor and U.S. Department of Health and Human Services.

List of Subjects in 26 CFR Part 54

Excise taxes, Health insurance, Pensions, Reporting and recordkeeping requirements.

Proposed Amendments to the Regulations

Accordingly, 26 CFR part 54 is proposed to be amended as follows:

PART 54—PENSION EXCISE TAXES

Paragraph 1. The authority citation for part 54 is amended by adding entries in numerical order to read as follows:

Authority: 26 U.S.C. 7805 * * *

Section 54.9801–1 is also issued under 26 U.S.C. 9806.

Section 54.9801–2 is also issued under 26 U.S.C. 9806.

Section 54.9801–3 is also issued under 26 U.S.C. 9806.

Section 54.9801–4 is also issued under 26 U.S.C. 9806.

Section 54.9801–5 is also issued under 26 U.S.C. 9801(c)(4), 9801(e)(3), and 9806.

Section 54.9801–6 is also issued under 26 U.S.C. 9806.

Section 54.9802–1 is also issued under 26 U.S.C. 9806.

Section 54.9804–1 is also issued under 26 U.S.C. 9806.

Section 54.9806–1 is also issued under 26 U.S.C. 9806. * * *

Par. 2. Sections 54.9801–1, 54.9801–2, 54.9801–3, 54.9801–4, 54.9801–5, 54.9801–6, 54.9802–1, 54.9804–1, and 54.9806–1 are added to read as follows:

[The text of these proposed sections is the same as the text of §§ 54.9801–1T, 54.9801–2T, 54.9801–3T, 54.9801–4T, 54.9801–5T, 54.9801–6T, 54.9802–1T, 54.9804–1T, and 54.9806–1T published elsewhere in this issue of the **Federal Register**].

Margaret Milner Richardson,

Commissioner of Internal Revenue.

[FR Doc. 97–8267 Filed 4–1–97; 12:48 pm]

BILLING CODE 4830–01–P

DEPARTMENT OF LABOR

Pension and Welfare Benefits Administration

29 CFR Part 2520

RIN 1210 AA55

Interim Rules Amending ERISA Disclosure Requirements for Group Health Plans

AGENCY: Pension and Welfare Benefits Administration, Department of Labor.

ACTION: Interim rules with request for comments.

SUMMARY: This document contains interim rules governing the content of the summary plan description (SPD) for group health plans, the furnishing of summaries of material reductions in covered services or benefits by group health plans, and the disclosure of SPD and related information through electronic media. The rules contained in this document implement amendments to the disclosure provisions of the Employee Retirement Income Security Act of 1974 (ERISA) enacted as part of the Health Insurance Portability and Accountability Act of 1996 (HIPAA) and the Newborns' and Mothers' Health Protection Act of 1996 (NMHPA).

Interested persons are invited to submit comments on the interim rules for consideration by the Department in developing final rules. The rules contained in this document are being adopted on an interim basis to accommodate statutorily established time frames intended to ensure that sponsors and administrators of group health plans, as well as participants and beneficiaries covered by such plans, have timely guidance concerning compliance with the recently enacted amendments to ERISA.

DATES: *Comments.* Written comments on these interim rules must be received by the Department of Labor on or before May 31, 1997.

Effective date. This regulation is effective on June 1, 1997. However, affected parties do not have to comply with the information collection requirements in the amendments to 29 CFR 2520.102–3, 2520.104b–1, and 2520.104b–3 made by these interim rules until the Department publishes in the **Federal Register** the control numbers assigned by the Office of Management and Budget (OMB) to these information collection requirements. Publication of the control numbers notifies the public that OMB has approved these information collection requirements under the Paperwork Reduction Act of 1995. The Department has asked for OMB clearance as soon as possible, and OMB approval is anticipated by or before June 1, 1997.

Applicability dates. The regulatory amendments implementing provisions enacted as part of HIPAA generally apply as of the first day of the first plan year beginning after June 30, 1997. The regulatory amendments implementing provisions enacted as part of NMHPA generally apply as of the first day of the first plan year beginning on or after January 1, 1998.

ADDRESSES: Interested persons are invited to submit written comments (preferably three copies) on these interim rules to: Pension and Welfare Benefits Administration, Room N–5669, U.S. Department of Labor, 200 Constitution Avenue, N.W., Washington D.C. 20210. Attention: Interim Disclosure Rules. All submissions will be open to public inspection at the Public Documents Room; Pension and Welfare Benefits Administration; U.S. Department of Labor; Room N–5638; 200 Constitution Avenue N.W.; Washington, D.C. 20210.

FOR FURTHER INFORMATION CONTACT: Eric A. Raps, Office of Regulations and Interpretations, Pension and Welfare Benefits Administration, (202) 219–8515 (not a toll-free number).

SUPPLEMENTARY INFORMATION:

A. Background

The rules contained in this document implement amendments to the disclosure provisions of ERISA enacted as part of HIPAA [1] and NMHPA. [2] The amendments affect group health plans as defined in section 733 of ERISA. [3] ERISA section 733(a) defines a ''group health plan'' as an ''employee welfare benefit plan to the extent that the plan provides medical care (as defined in paragraph (2) and including items and services paid for as medical care) to employees or their dependents (as defined under the terms of the plan) directly or through insurance, reimbursement or otherwise.'' [4]

As discussed herein, these rules affect the content of SPDs, the furnishing of summaries of material reductions in covered services or benefits to participants, and the disclosure of SPD and related information through electronic media. As also discussed herein, these rules are being adopted on an interim basis in order to accommodate statutorily established time frames for provision of regulatory guidance. The Department, however, is inviting public comment on the interim rules to assist in the formulation of final rules in this area.

B. Content of SPDs

Pursuant to ERISA section 101(a)(1), the administrator of an employee benefit plan is required to furnish an SPD to each participant covered under the plan and to each beneficiary who is receiving benefits under the plan. Section 102(b) and the Department's regulations issued thereunder, 29 CFR 2520.102–3, describe the information required to be contained in the SPD.

Section 101(c)(2) of HIPAA amended ERISA section 102(b) to require SPDs of group health plans to include information indicating whether a health insurance issuer (as defined in section 733(b)(2)) [5] is responsible for the financing or administration of the plan. This amendment, in the view of the Department, is intended to ensure that SPDs clearly inform participants and beneficiaries about the role of insurance issuers with respect to their group health plan, particularly in those cases when the plan is self-funded and an insurance issuer is serving as a contract administrator or claims payor, rather than an insurer. In such instances, it is important that participants and beneficiaries understand that the insurance issuer is not acting as insurer of their health benefits under the plan. In this regard, the Department is amending paragraph (q) of § 2520.102–3, relating to the identification of funding media through which benefits are provided, to add at the end thereof a requirement that, where a health insurance issuer is responsible, in whole or in part, for the financing or administration of a group health plan, the SPD of such plan include the name and address of the issuer, whether and to what extent benefits under the plan

[1] Pub. L. 104–191, enacted on August 21, 1996.

[2] Pub. L. 104–204, enacted on September 26, 1996.

[3] Section 733 was enacted as section 706 of ERISA by section 101(a) of HIPAA and subsequently redesignated as section 733 of ERISA pursuant to section 603(a)(3) of NMHPA.

[4] ''Medical care'' is defined in paragraph (a)(2) of section 733 to mean ''amounts paid for—(A) the diagnosis, cure, mitigation, treatment, or prevention of disease, or amounts paid for the purpose of affecting any structure or function of the body, (B) amounts paid for transportation primarily for and essential to medical care referred to in subparagraph (A), and (C) amounts paid for insurance covering medical care referred to in subparagraphs (A) and (B).''

[5] ''Health insurance issuer'' is defined in section 733(b)(2) to mean ''an insurance company, insurance service, or insurance organization (including a health maintenance organization, as defined in paragraph (3)) which is licensed to engage in the business of insurance in a State and which is subject to State law which regulates insurance (within the meaning of section 514(b)(2)). Such term does not include a group health plan.''

are guaranteed under a contract or policy of insurance issued by the issuer, and the nature of any administrative services (e.g., payment of claims) provided by the issuer.

Section 101(c)(2) of HIPAA also amended ERISA section 102(b) to require SPDs of group health plans to include the office at the Department of Labor through which participants and beneficiaries may seek assistance or information regarding their rights under ERISA and HIPAA with respect to health benefits. Currently, individualized participant assistance on all aspects of ERISA is offered through the Pension and Welfare Benefits Administration's field offices and, in the national office, the Division of Technical Assistance and Inquiries. To ensure that participants and beneficiaries are provided assistance information consistent with HIPAA section 101(c)(2), the Department is amending the model statement of ERISA rights, at § 2520.102–3(t)(2), to replace for group health plans the last sentence of that statement with an updated sentence that reads as follows: ''If you have any questions about this statement or about your rights under ERISA, you should contact the nearest office of the Pension and Welfare Benefits Administration, U.S. Department of Labor, listed in your telephone directory or the Division of Technical Assistance and Inquiries, Pension and Welfare Benefits Administration, U.S. Department of Labor, 200 Constitution Avenue, N.W., Washington, D.C. 20210.'' Administrators may include in the statement the address and telephone number of the nearest office or offices of the Pension and Welfare Benefits Administration (PWBA). A directory of current PWBA regional and district offices is printed below.

PWBA Offices

Atlanta Regional Office, 61 Forsyth St., S.W., Suite 7B54, Atlanta, Georgia 30303, Phone: 404/562–2156

Boston Regional Office, One Bowdoin Square, 7th Floor, Boston, MA 02114, Phone: 617/424–4950

Chicago Regional Office, 200 West Adams Street, Suite 1600, Chicago, IL 60606, Phone: 312/353–0900

Cincinnati Regional Office, 1885 Dixie Highway, Suite 210, Ft. Wright, KY 41011–2664, Phone: 606/578–4680

Dallas Regional Office, 525 Griffin Street, Rm. 707, Dallas, Texas 75202–5025, Phone: 214/767–6831

Detroit District Office, 211 West Fort Street, Suite 1310, Detroit, MI 48226–3211, Phone: 313/226–7450

Kansas City Regional Office, City Center Square, 1100 Main, Suite 1200, Kansas City, MO 64105–2112, Phone: 816/426–5131

Los Angeles Regional Office, 790 E. Colorado Boulevard, Suite 514, Pasadena, CA 91101, Phone: 818/583–7862

Miami District Office, 111 NW 183rd St., Suite 504, Miami, Florida 33169, Phone: 305/651–6464

New York Regional Office, 1633 Broadway, Rm. 226, New York, N.Y. 10019, Phone: 212/399–5191

Philadelphia Regional Office, Gateway Bldg., 3535 Market Street, Room M300, Philadelphia, PA 19104, Phone: 215/596–1134

St. Louis District Office, 815 Olive Street, Rm. 338, St. Louis, MO 63101–1559, Phone: 314/539–2691

San Francisco Regional Office, 71 Stevenson St., Suite 915, P.O. Box 190250, San Francisco, CA 94119–0250, Phone: 415/975–4600

Seattle District Office, 1111 Third Avenue, Suite 860, MIDCOM Tower, Seattle, Washington 98101–3212, Phone: 206/553–4244

Washington D.C. District Office, 1730 K Street, N.W., Suite 556, Washington, D.C. 20006, Phone: 202/254–7013

The Department notes that, in the case of group health plans not utilizing the model statement in § 2520.102–3(t)(2), the foregoing information is required to be included in a statement of ERISA rights intended to satisfy the requirements of paragraph (t)(1) of that section.

Pursuant to HIPAA section 101(g), the foregoing amendments to the SPD content requirements apply with respect to group health plans for plan years beginning after June 30, 1997. The Department is amending § 2520.102–3 to add a new paragraph (v), ''applicability dates'', that treats the HIPAA content changes as changes in the information required to be contained in the SPD and applies the requirements of 29 CFR 2520.104b–3[6] to the disclosure of such changes, except that the changes have to be disclosed to participants and beneficiaries not later than 60 days after the first day of the first plan year for which the changes are applicable to the plan.

While the interim rule amendment of the model statement of ERISA rights corrects outdated name and address information for contacting the U.S. Department of Labor, and therefore has obvious applicability beyond group health plans, the Department is limiting the interim rule to group health plans in view of directive under HIPAA section 101(c)(2). The Department, however, specifically invites public comment on the extent to which application of the rule should be extended to other plans.

Section 603(a) of the NMHPA also amended ERISA by adding a new section 711 establishing restrictions on the extent to which group health plans and health insurance issuers may limit hospital lengths of stay for mothers and newborn children following delivery. In an effort to ensure that participants and beneficiaries are apprised of the limitations established under NMHPA, paragraph (d) of section 711 provides that ''[t]he imposition of the requirements of this section [section 711] shall be treated as a material modification in the terms of the plan * * * except that the summary description required to be provided under the last sentence of section 104(b)(1) with respect to such modification shall be provided by not later than 60 days after the first day of the first plan year in which such requirements apply.''[7] Pursuant to NMHPA section 603(c), the provisions of section 603 apply to group health plans for plan years beginning on or after January 1, 1998. In this regard, the Department is amending § 2520.102–3, the SPD content regulations, by adding a new paragraph (u) requiring that the SPDs of group health plans offering maternity benefits include a statement indicating that ''group health plans and health insurance issuers offering group health insurance coverage generally may not, under Federal law, restrict benefits for any hospital length of stay in connection with childbirth for the mother or newborn child to less than 48 hours following a normal vaginal delivery, or less than 96 hours following a caesarean section, or require that a provider obtain authorization from the plan or insurance issuer for prescribing a length of stay not in excess of the above periods.'' To facilitate compliance, the Department views the statement included in this new paragraph (u) of the regulation as sample language that may be used by administrators to satisfy this content requirement for group health plan SPDs.

Consistent with NMHPA section 603(c), new paragraph (v) of § 2520.102–3, relating to applicability dates, provides that the information described in paragraph (u) of § 2520.102–3 shall be furnished to each participant covered

[6] Section 2520.104b–3 prescribes the requirements applicable to the furnishing of summaries of material modifications to the plan and changes in the information required to be included in the summary plan description.

[7] Section 104(b)(1) generally requires summary descriptions of material modifications to the plan to be furnished to participants and beneficiaries not later than 210 days after the end of the plan year in which the change is adopted.

under the plan and each beneficiary receiving benefits under the plan not later than 60 days after the first day of the first plan year beginning on or after January 1, 1998.

C. Material Reductions In Covered Services or Benefits

Section 104(b)(1) of ERISA requires, among other things, that participants and beneficiaries be furnished summary descriptions of material modifications in the terms of their plans and changes in the information required to be included in the SPD not later than 210 days after the end of the plan year in which the change is adopted. Section 101(c)(1) of HIPAA amended ERISA section 104(b)(1) to provide that in the case of any modification or change that is a ''material reduction in covered services or benefits provided under a group health plan'', participants and beneficiaries must be furnished the summary of such modification or change not later than 60 days after the adoption of the modification or change, unless plan sponsors provide summaries of modifications or changes at regular intervals of not more than 90 days.

The interim rules contained herein amend the regulations governing the furnishing of summaries of material modifications, at 29 CFR 2520.104b–3, to establish a special rule for the furnishing of summaries of material modifications and changes by group health plans when such modifications or changes constitute a material reduction in covered services or benefits under the plan. The rules governing the furnishing of such summaries are contained in a new paragraph (d) of § 2520.104b–3.

Section 2520.104b–3(d)(1) provides, consistent with HIPAA section 101(c)(1), that the administrator of a group health plan must furnish to each participant covered under the plan and each beneficiary receiving benefits under the plan, a summary of any modification to the plan or change in the information required to be included in the SPD that is a material reduction in covered services or benefits not later than 60 days after the date of adoption of the modification or change.

Section 2520.104b–3(d)(2) provides that the 60-day period for furnishing summaries of modifications or changes, described in paragraph (d)(1), does not apply to any participant covered by the plan or any beneficiary receiving benefits who would reasonably be expected to be furnished such summary in connection with a system of communication maintained by the plan sponsor or administrator, with respect to which plan participants and beneficiaries are provided information concerning their plan, including modifications and changes thereto, at regular intervals of not more than 90 days. For example, a summary of material reduction in services or benefits would not have to be furnished to participants within the prescribed 60-day period if such summary is included as an insert in a union newspaper or a company publication regularly furnished to participants at intervals of not more than 90 days. It should be noted that the use of such periodicals must otherwise meet the requirements of 29 CFR 2520.104b–1.[8] It should also be noted that if a plan has participants or beneficiaries (e.g., separated participants, qualified beneficiaries with continuation coverage, etc.) that do not receive the newspaper, company publication or periodic disclosure, such participants and beneficiaries must be furnished the summaries of material reductions in services or benefits under the group health plan not later than 60 days after the date of adoption.

Section 2520.104b–3(d)(3) defines the term ''material reduction in covered services or benefits'' provided under a group health plan. For purposes of furnishing summaries of material modifications or changes, paragraph (d)(3)(i) defines a ''material reduction in covered services or benefits'' to mean any modification to the plan or change in the information required to be included in the SPD that, independently or in conjunction with other contemporaneous modifications or changes, would be considered by the average plan participant to be an important reduction in covered services or benefits.

While it is the view of the Department that determinations as to whether a particular plan modification or SPD change constitutes a ''material reduction in covered services or benefits'' generally will depend on the facts of each case, the Department believes that in making such determinations it is appropriate, given the nature of the required disclosure, to assess in each case whether the average participant in the plan would view the modification or change as an important reduction in covered services or benefits under the plan. Also, recognizing that the significance of plan modifications or changes may be affected by other contemporaneous modifications or changes, it is the view of the Department that plan modifications and SPD changes must be viewed in the aggregate for purposes of determining whether such modifications or changes, individually or together, result in a ''material reduction in covered services or benefits.''

To facilitate compliance, paragraph (d)(3)(ii) sets forth a listing of modifications or changes that generally would constitute a ''reduction in covered services or benefits.'' In this regard, paragraph (d)(3)(ii) provides that a ''reduction in covered services or benefits'' generally would include any modification or change that: eliminates benefits payable under the plan; reduces benefits payable under the plan, including a reduction that occurs as a result of a change in formulas, methodologies or schedules that serve as the basis for making benefit determinations; increases deductibles, co-payments, or other amounts to be paid by a participant or beneficiary; reduces the service area covered by a health maintenance organization; establishes new conditions or requirements (e.g., preauthorization requirements) to obtaining services or benefits under the plan.

The interim rules add a new paragraph (e) to § 2520.104b–3 setting forth the dates on which the requirements of § 2520.104b–3(d) take effect. Under § 2520.104b–3(e), the requirements of paragraph (d) apply to material reductions in covered services or benefits under a group health plan adopted on or after the first day of the first plan year beginning after June 30, 1997.

D. Alternative Delivery Mechanisms—Disclosure Through Electronic Media

In addition to amending ERISA section 104(b)(1) to provide for the furnishing of summaries of material reductions in covered services or benefits, section 101(c) of HIPAA amended section 104(b)(1) to provide that ''[t]he Secretary shall issue regulations within 180 days after the date of enactment of the Health Insurance Portability and Accountability Act of 1996, providing alternative mechanisms to delivery by mail through which group health plans (as so defined) may notify participants and beneficiaries of material reductions in covered services or benefits.''

The Department has issued a regulation, at 29 CFR 2520.104b–1, governing the delivery of information required to be furnished to participants

[8] Section 2520.104b–1 permits the disclosure of plan information through periodicals, such as union newspapers and company publications, if the distribution list for the periodical is comprehensive and up-to-date and a prominent notice on the front page of the periodical advises the reader that the issue contains an insert with important information about the plan which should be read and retained for future reference.

and beneficiaries under ERISA. The Department notes that the regulation does not require delivery by mail where other methods of delivery are reasonably calculated to ensure actual receipt of materials by participants and beneficiaries and likely to result in full distribution of the information. *See* § 2520.104b–1(b). In this regard, paragraph (b) of § 2520.104b–1 cites, as an example, in-hand delivery of materials to employees at their worksite locations. The regulation also references the use of union newsletters and company publications as a means by which an administrator may satisfy its disclosure obligation. An alternative to mail delivery not specifically referenced in the current regulation is delivery of disclosure materials through electronic media. Accordingly, the Department is amending § 2520.104b–1 to clarify the circumstances under which a group health plan administrator will be deemed to satisfy its disclosure obligation under § 2520.104b–1 with respect to the delivery of SPDs, summaries of material reductions in covered services or benefits and other summaries of plan modifications and SPD changes through electronic media.[9] This amendment is intended to establish, on an interim basis, a ''safe harbor'' on which administrators of group health plans may rely in delivering plan disclosures through electronic media. The amendment is not intended to represent the exclusive means by which the requirements of § 2520.104b–1 may be satisfied in using electronic media as a method of delivering plan disclosures.

Under the interim rule, § 2520.104b–1 is amended by adding a new paragraph (c) setting forth the conditions under which the use by a group health plan of electronic media for furnishing documents described in ERISA section 104(b)(1), i.e., SPDs and summaries of material modifications and changes, will be deemed to be a method of delivery that is calculated to ensure actual receipt and result in full distribution, within the meaning of paragraph of § 2520.104b–1. New paragraph (c)(1) of § 2520.104b–1 sets forth criteria that are generally intended to ensure that the system of electronic communication utilized by a plan administrator for distribution of disclosure information results in the actual delivery of such information to participants and that the information delivered is equivalent in both substance and form to the disclosure information the participants would have received had they been furnished the information in paper form. In general, paragraph (c)(1) (i)–(ii) provides for the utilization of an electronic delivery system that: (i) the administrator takes appropriate and necessary steps to ensure results in actual receipt by participants of transmitted information, such as through the use of a return-receipt electronic mail feature or periodic reviews or surveys by the plan administrator to confirm the integrity of the delivery system; and (ii) results in the furnishing of disclosure information that is consistent with the style, format and content requirements applicable to the disclosure (*See* 29 CFR 2520.102–2 *et seq.*). New paragraph (c)(1)(iii) requires notification to each participant, through electronic or other means, apprising the participant of the disclosure documents furnished electronically (e.g., SPDs, summaries of material changes to the plan and changes to information included in the SPD), the significance of the documents (e.g., the document contains summary descriptions of changes in the benefits described in your SPD), and the participant's right to request and receive, free of charge, a paper copy of each such document from the plan administrator. The Department believes such notification is necessary so that participants who, for example, receive a disclosure document as an attachment to an electronically transmitted message will be put on notice that the attachment contains important plan information.

It is the view of the Department that participants have a general right to receive required plan disclosures in paper form from the plan administrator. Accordingly, the Department believes that where a plan administrator elects to utilize electronic media as the method for delivering required plan disclosures, participants must be afforded the opportunity to obtain the disclosures from the plan administrator in paper form, free of charge. The obligation to furnish paper copies of documents furnished through electronic media is set forth in paragraph (c)(1)(iv). The Department specifically invites public comment on the relative costs and benefits of this requirement to furnish paper copies to participants on request of documents furnished through electronic media.

New paragraph (c)(2) describes the participants with respect to whom the electronic delivery of plan disclosures will be deemed to be an acceptable method of delivery for fulfilling the disclosure obligation described in § 2520.104b–1(b)(1). Such participants, in the view of the Department, must have: the ability to effectively access at their worksite documents furnished in electronic form; and the opportunity at their worksite to readily convert furnished documents from electronic form to paper form, free of charge. In this regard, the Department believes that, however effective an electronic system may be for delivering plan disclosures, the critical determination in assessing the adequacy of the system, as a means for communicating to plan participants, will be the extent to which participants can readily access and retain the delivered information.

While the Department believes the criteria set forth in the interim rule have applicability beyond group health plans, the Department is limiting the interim rule ''safe harbor'' to group health plans in view of directive under HIPAA section 101(c)(1) and the absence of a public record on the matter. The Department, however, specifically invites public comment on the criteria established by the interim rule, the extent to which application of the rule should be extended to other plans, the extent to which application of the rule should be expanded to other plan disclosures (e.g., summary annual reports, individual benefit statements) and, if expanded, whether additional criteria may be necessary to ensure private, confidential communications of individual account or benefit-related information.

Administrators of group health plans may rely on this interim amendment on or after June 1, 1997.

E. Interim Rules and Request for Comments

The rules contained herein are being adopted on an interim basis in order to ensure that plan sponsors and administrators of group health plans, as well as participants and beneficiaries, are provided timely guidance concerning compliance with recently enacted amendments to ERISA. Specifically, HIPAA section 101(a) adds a new ERISA part 7, and within this new part, section 707 (redesignated as section 734 by section 603(a)(3) of the NMHPA) provides that the Secretary of Labor may promulgate any interim final rules as the Secretary determines are appropriate to carry out this part. The rules herein complement changes made in the new part 7 of ERISA and are being adopted on an interim basis because the Department finds that issuance of such regulations in interim

[9] In the Department's view, a method of delivery, and conditions applicable thereto, appropriate for furnishing summaries of material reductions in covered services or benefits is necessarily appropriate to the furnishing by group health plans of other types of material modifications, SPDs and updated SPDs, given the similar, if not identical, nature of the information being provided.

final form with a request for comments is appropriate to carry out the new regulatory structure imposed by HIPAA on group health plans and health insurance issuers, and is necessary to ensure that plan sponsors and administrators of group health plans, as well as participants and beneficiaries, are provided timely guidance concerning compliance with new and important disclosure obligations imposed by HIPAA. The Department also finds for the above reasons that the publication of a proposed regulation would be impracticable, unnecessary, and contrary to the public interest.

The statutory provisions of HIPAA and NMHPA implemented by the pertinent regulatory amendments in this document are generally applicable for group health plans for plan years beginning on or after July 1, 1997, and January 1, 1998, respectively. Plan administrators and sponsors, and participants and beneficiaries, will need guidance on how to comply with the new statutory provisions before these effective dates. Pursuant to section 101(g) of HIPAA, the Secretary must first issue regulations necessary to carry out the amendments made by section 101 by April 1, 1997. Issuance of a notice of proposed rulemaking with a period for comments prior to issuing a final rule could delay the issuance of essential guidance and prevent the Department from complying with its deadline. Furthermore, although the rules herein are being adopted on an interim basis, the Department is inviting interested persons to submit written comments on the rules for consideration in the development of final rules in this area. Such final rules may be issued in advance of the above July 1, 1997, and January 1, 1998, dates.

Executive Order 12866 Statement

Under Executive Order 12866 (58 FR 51735, Oct. 4, 1993), it must be determined whether a departmental action is ''significant'' and therefore subject to review by the Office of Management and Budget (OMB) and the requirements of the Executive Order. Under section 3(f), the order defines a ''significant regulatory action'' as an action that is likely to result in a rule (1) having an annual effect on the economy of $100 million or more, or adversely and materially affecting a sector of the economy, productivity, competition, jobs, the environment, public health or safety, or State, local or tribal governments or communities (also referred to as ''economically significant''); (2) creating a serious inconsistency or otherwise interfering with an action taken or planned by another agency; (3) materially altering the budgetary impacts of entitlement, grants, user fees, or loan programs or the rights and obligations of recipients thereof; or (4) raising novel legal or policy issues arising out of legal mandates, the President's priorities, or the principles set forth in the Executive Order.

Pursuant to the terms of the Executive Order, it has been determined that the action that is the subject of the interim rules is ''significant'' under category (4), *supra*, and subject to OMB review on that basis. The estimated cost of compliance with HIPAA and the interim rules are set forth in the Paperwork Reduction Act Analysis, below. The benefits of the interim rules, as yet unquantified, will arise as participants and beneficiaries become better informed about their health care coverage because of additional disclosures and more timely distribution of plan information.

Paperwork Reduction Act Analysis

The Department of Labor has submitted this emergency processing public information collection request (ICR) to the Office of Management and Budget for review and clearance under the Paperwork Reduction Act of 1995 (Pub. L. 104–13, 44 U.S.C. Chapter 35). The Department has asked for OMB clearance as soon as possible, and OMB approval is anticipated by or before June 1, 1997. As part of its continuing effort to reduce paperwork and respondent burden, the Department conducts a pre-clearance consultation program to provide the general public and Federal agencies with an opportunity to comment on ICRs in accordance with the Paperwork Reduction Act of 1995 (PRA 95)(Pub. L. 104–13, 44 U.S.C. Chapter 35) and 5 CFR 1320.11. This program helps to ensure that requested data can be provided in the desired format, reporting burden (time and financial resources) is minimized, collection instruments are clearly understood, and the impact of collection requirements on respondents can be properly assessed. Currently, the Pension and Welfare Benefits Administration is soliciting comments concerning the revised collection of Summary Plan Description Requirements under ERISA.

DATES: Written comments must be submitted to the offices listed in the addressee section below on or before May 31, 1997. In light of the request for OMB clearance by June 1, 1997, submission of comments within the first 30 days is encouraged to ensure their consideration.

The Department and the Office of Management and Budget are particularly interested in comments which:

- evaluate whether the proposed collection is necessary for the proper performance of the functions of the agency, including whether the information will have practical utility;
- evaluate the accuracy of the agency's estimate of the burden of the proposed collection of information, including the validity of the methodology and assumptions used;
- enhance the quality, utility, and clarify the information to be collected; and
- minimize the burden of the collection of information on those who are to respond, including through the use of appropriate automated, electronic, mechanical, or other technological collection techniques or other forms of information technology, e.g., permitting electronic submissions of responses.

ADDRESSES: Comments and questions about the ICR should be forwarded to: Gerald B. Lindrew, Office of Policy and Research, U.S. Department of Labor, Pension and Welfare Benefits Administration, 200 Constitution Avenue, Room N–5647, Washington, D.C. 20210, Telephone: (202) 219–4782 (this is not a toll-free number), Fax: (202) 219–4745; and the Office of Information and Regulatory Affairs, Attn: OMB Desk Officer for the Pension and Welfare Benefits Administration, Office of Management and Budget, Room 10235, Washington, D.C. 20503, Telephone: (202) 395–7316. Additional PRA 95 Information:

I. *Background:* The administrator of an employee benefit plan is required to furnish an SPD to each participant covered under the plan and to each beneficiary who is receiving benefits under the plan. The SPD must be written in a manner calculated to be understood by the average plan participant and must be sufficiently comprehensive to apprise the plan's participants and beneficiaries of their rights and obligations under the plan. To the extent that there is a material modification in the terms of the plan or a change in the information required to be contained in the SPD, ERISA requires that the administrator furnish participants covered under the plan and beneficiaries receiving benefits with a summary of such changes.

II. *Current Actions: HIPAA and NMHPA amend certain reporting and disclosure provisions of ERISA*

Type of Review: Revision of currently approved collection.

Agency: Pension and Welfare Benefits Administration.

Title: The title of the interim rule is Amendment of Summary Plan Description and Related ERISA Regulations To Implement Statutory Changes In the Health Insurance Portability and Accountability Act of 1996 (HIPAA).

OMB Number: 1210–0039.

Affected Public: Business or other for-profit, not-for-profit.

Total Responses (annual): 43,952,715 (1997), 62,728,915 (1998), 31,896,715 (1999).

Total Respondents (annual): 176,315 (1997), 194,235 (1998), 163,515 (1999).

Frequency: On occasion.

Average Time per Response:

Average SPD/SMM—We estimate it takes an average of 6 hours for preparation of SPDs/SMMs, including the time to copy, assemble, and mail the document to the Department of Labor.

SMM Compliance—We estimate that preparation of an SMM sufficient to satisfy the requirements of this regulation will take an average of 1 hour.

Distribution—We estimate that 2 minutes per participant is the time needed to distribute an SMM/SPD, including time spent reproducing the document and mailing the document.

Estimated Total Burden Hours: 1,007,425 (1997), 1,130,282 (1998), 942,980 (1999).

There is estimated to be no capital/start-up cost. Total Burden Cost for operating/maintenance is estimated to be $72,310,858 in 1997, $82,338,958 in 1998 and $65,002,858 in 1999.

Note: The Average Time Per Response, Estimated Total Burden Hours, and Total Burden Cost have been estimated without accounting for those respondents that will implement the ''alternative mechanisms to delivery by mail'' provision contained in the interim rule. It is expected that some respondents will use these alternatives, and that these alternatives will reduce burden hours and costs.

Comments submitted in response to this notice will be summarized and/or included in the request for OMB approval of the information collection request; they will also become a matter of public record.

Congressional Review

This interim rule has been transmitted to Congress and the Comptroller General for review under section 801(a)(1)(A) of the Small Business Regulatory Enforcement Fairness Act of 1996 (5 U.S.C. 801 *et seq.*).

Unfunded Mandates Reform Act

For purposes of the Unfunded Mandates Reform Act of 1995 (Pub. L. 104–4), as well as Executive Order 12875, this interim rule does not include any Federal mandate that may result in expenditures by State, local or tribal governments, and does not impose an annual burden exceeding $100 million on the private sector.

Statutory Authority

This interim regulation is adopted pursuant to authority contained in section 505 of ERISA (Pub. L. 93–406, 88 Stat. 894, 29 U.S.C. 1135) and sections 104(b) and 734 of ERISA, as amended, (Pub. L. 104–191, 110 Stat. 1936, 1951 and Pub. L. 104–204, 110 Stat. 2935, 29 U.S.C. 1024 and 1191c) and under Secretary of Labor's Order No. 1–87, 52 FR 13139, April 21, 1987.

List of Subjects in 29 CFR Part 2520

Employee benefit plans, Employee Retirement Income Security Act, Group health plans, Pension plans, Welfare benefit plans.

For the reasons set forth above, Part 2520 of Title 29 of the Code of Federal Regulations is amended as follows:

PART 2520—[AMENDED]

1. The authority for Part 2520 is revised to read as follows:

Authority: Secs. 101, 102, 103, 104, 105, 109, 110, 111(b)(2), 111(c), and 505, Pub. L. 93–406, 88 Stat. 840–52 and 894 (29 U.S.C. 1021–1025, 1029–31, and 1135); Secretary of Labor's Order No. 27–74, 13–76, 1–87, and Labor Management Services Administration Order 2–6.

Sections 2520.102–3, 2520.104b–1 and 2520.104b–3 also are issued under sec. 101 (a), (c) and (g)(4) of Pub. L. 104–191, 110 Stat. 1936, 1939, 1951 and 1955 and, sec. 603 of Pub. L. 104–204, 110 Stat. 2935 (29 U.S.C. 1185 and 1191c).

2. Section 2520.102–3 is amended by adding a sentence at the end of paragraph (q) to read as follows:

§ 2520.102–3 Contents of summary plan description.

* * * * *

(q) * * * If a health insurance issuer, within the meaning of section 733(b)(2) of the Act, is responsible, in whole or in part, for the financing or administration of a group health plan, the summary plan description shall indicate the name and address of the issuer, whether and to what extent benefits under the plan are guaranteed under a contract or policy of insurance issued by the issuer, and the nature of any administrative services (e.g., payment of claims) provided by the issuer.

* * * * *

3. Section 2520.102–3 is further amended by revising the last sentence of the undesignated paragraph following paragraph (t)(2) to read as follows:

§ 2520.102–3 Contents of summary plan description.

* * * * *

(t) * * *

(2) * * *

If you have any questions about this statement or about your rights under ERISA, you should contact the nearest office of the Pension and Welfare Benefits Administration, U.S. Department of Labor, listed in your telephone directory or the Division of Technical Assistance and Inquiries, Pension and Welfare Benefit Administration, U.S. Department of Labor, 200 Constitution Avenue N.W., Washington, D.C. 20210.

4. Section 2520.102–3 is further amended by adding paragraphs (u) and (v) to read as follows:

§ 2520.102–3 Contents of summary plan description.

* * * * *

(u) In the case of a group health plan, as defined in section 733(a)(1) of the Act, that provides maternity or newborn infant coverage, a statement indicating that group health plans and health insurance issuers offering group insurance coverage generally may not, under Federal law, restrict benefits for any hospital length of stay in connection with childbirth for the mother or newborn child to less than 48 hours following a normal vaginal delivery, or less than 96 hours following a caesarean section, or require that a provider obtain authorization from the plan or the insurance issuer for prescribing a length of stay not in excess of the above periods.

(v) *Applicability dates.* (1) The information described in the last sentence of paragraph (q) and in the last two sentences of paragraph (t)(2) shall be treated as a change in the information required to be included in the summary plan description for a group health plan for purposes of 29 CFR 2520.104b–3, except that such information shall be furnished to each participant covered under the plan and each beneficiary receiving benefits under the plan not later than 60 days after the first day of the first plan year beginning after June 30, 1997.

(2) The information described in paragraph (u) of this section shall be furnished to each participant covered under a group health plan and each beneficiary receiving benefits under a group health plan not later than 60 days after the first day of the first plan year beginning on or after January 1, 1998.

5. Section 2520.104b–3 is amended by revising the second sentence of paragraph (a), redesignating paragraphs (d) and (e) as paragraphs (f) and (g), respectively, and adding new paragraphs (d) and (e) to read as follows:

§ 2520.104b–3 Summary of material modifications to the plan and changes in the information required to be included in the summary plan description.

(a) * * * Except as provided in paragraph (d) of this section, the plan administrator shall furnish this summary, written in a manner calculated to be understood by the average plan participant, not later than 210 days after the close of the plan year in which the modification or change was adopted. * * *

* * * * *

(d) *Special rule for group health plans.* (1) *General.* Except as provided in paragraph (d)(2) of this section, the administrator of a group health plan, as defined in section 733(a)(1) of the Act, shall furnish to each participant covered under the plan and each beneficiary receiving benefits under the plan a summary, written in a manner calculated to be understood by the average plan participant, of any modification to the plan or change in the information required to be included in the summary plan description, within the meaning of paragraph (a) of this section, that is a material reduction in covered services or benefits not later than 60 days after the date of adoption of the modification or change.

(2) *90-day alternative rule.* The administrator of a group health plan shall not be required to furnish a summary of any material reduction in covered services or benefits within the 60-day period described in paragraph (d)(1) of this section to any participant covered under the plan or any beneficiary receiving benefits who would reasonably be expected to be furnished such summary in connection with a system of communication maintained by the plan sponsor or administrator, with respect to which plan participants and beneficiaries are provided information concerning their plan, including modifications and changes thereto, at regular intervals of not more than 90 days and such communication otherwise meets the disclosure requirements of 29 CFR 2520.104b–1.

(3) *''Material reduction''.* (i) For purposes of this paragraph (d), a ''material reduction in covered services or benefits'' means any modification to the plan or change in the information required to be included in the summary plan description that, independently or in conjunction with other contemporaneous modifications or changes, would be considered by the average plan participant to be an important reduction in covered services or benefits under the plan.

(ii) A ''reduction in covered services or benefits'' generally would include any plan modification or change that: eliminates benefits payable under the plan; reduces benefits payable under the plan, including a reduction that occurs as a result of a change in formulas, methodologies or schedules that serve as the basis for making benefit determinations; increases deductibles, co-payments, or other amounts to be paid by a participant or beneficiary; reduces the service area covered by a health maintenance organization; establishes new conditions or requirements (e.g., preauthorization requirements) to obtaining services or benefits under the plan.

(e) *Applicability date.* Paragraph (d) of this section is applicable as of the first day of the first plan year beginning after June 30, 1997.

* * * * *

6. Section 2520.104b–1 is amended by redesignating paragraph (c) as paragraph (d) and adding a new paragraph (c) to read as follows:

§ 2520.104b–1 Disclosure.

* * * * *

(c) *Disclosure through electronic media.* (1) The administrator of a group health plan furnishing documents described in section 104(b)(1) of the Act through electronic media will be deemed to satisfy the requirements of paragraph (b)(1) of this section with respect to participants described in paragraph (c)(2) of this section if:

(i) The administrator takes appropriate and necessary measures to ensure that the system for furnishing documents results in actual receipt by participants of transmitted information and documents (e.g., uses return-receipt electronic mail feature or conducts periodic reviews or surveys to confirm receipt of transmitted information);

(ii) Electronically delivered documents are prepared and furnished in a manner consistent with the applicable style, format and content requirements (See 29 CFR 2520.102–2 through 2520.102–5);

(iii) Each participant is provided notice, through electronic means or in writing, apprising the participant of the document(s) to be furnished electronically, the significance of the document (e.g., the document describes changes in the benefits provided by your plan) and the participant's right to request and receive, free of charge, a paper copy of each such document; and

(iv) Upon request of any participant, the administrator furnishes, free of charge, a paper copy of any document delivered to the participant through electronic media.

(2) For purposes of paragraph (c)(1) of this section, the furnishing of documents through electronic media satisfies the requirements of paragraph (b)(1) of this section only with respect to participants:

(i) Who have the ability to effectively access at their worksite documents furnished in electronic form; and

(ii) Who have the opportunity at their worksite location to readily convert furnished documents from electronic form to paper form free of charge.

(3) This paragraph (c) applies on or after June 1, 1997.

* * * * *

Signed at Washington, D.C., this 27th day of March, 1997.

Olena Berg,

Assistant Secretary, Pension and Welfare Benefits Administration, U.S. Department of Labor.

[FR Doc. 97–8173 Filed 4–1–97; 12:52 pm]

BILLING CODE 4510–29–P

DEPARTMENT OF HEALTH AND HUMAN SERVICES

45 CFR Part 148

[BPD–882–IFC]

RIN 0938–AH75

Individual Market Health Insurance Reform: Portability From Group to Individual Coverage; Federal Rules for Access in the Individual Market; State Alternative Mechanisms to Federal Rules

AGENCY: Department of Health and Human Services.

ACTION: Interim final rule with comment period.

SUMMARY: This interim final rule with comment period implements section 111 of the Health Insurance Portability and Accountability Act of 1996, which sets forth Federal requirements designed to improve access to the individual health insurance market. Certain ''eligible individuals'' who lose group health insurance coverage are assured availability of coverage in the individual market, on a guaranteed issue basis, without preexisting condition exclusions. In addition, all individual health insurance coverage must be guaranteed renewable. This rule also sets forth procedures that apply to States that choose to implement a

mechanism under State law, as an alternative to the Federal requirements, with respect to guaranteed availability for eligible individuals. It also sets forth the rules that apply if a State does not substantially enforce the statutory requirements.

DATES: *Effective date:* These regulations are effective April 8, 1997.

However, affected parties do not have to comply with the information collection requirements in §§ 148.120, 148.122, 148.124, 148.126, 148.200, and 148.202 until the Department has published in the **Federal Register** the control numbers assigned by the Office of Management and Budget (OMB) to these information collection requirements. Section 148.128 is currently approved under emergency OMB approval number 0938–0699, which will expire on July 31, 1997, but will be reapproved with the sections referenced above. Publication of the control numbers notifies the public that OMB has approved these information collection requirements under the Paperwork Reduction Act of 1995.

Comment date: Comments will be considered if we receive them at the appropriate address, as provided below, no later than 5 p.m. on July 7, 1997.

Applicability dates: The various dates that these regulations are applicable are set forth in the Supplementary Information section of the preamble.

ADDRESSES: Mail written comments (1 original and 3 copies) to the following address: Health Care Financing Administration, Department of Health and Human Services, Attention: BPD–882–IFC, P.O. Box 26676, Baltimore, MD 21207–0488.

If you prefer, you may deliver your written comments (1 original and 3 copies) to one of the following addresses:

Room 309–G, Hubert H. Humphrey Building, 200 Independence Avenue, SW., Washington, DC 20201, or

Room C5–09–26, 7500 Security Boulevard, Baltimore, MD 21244–1850.

Because of staffing and resource limitations, we cannot accept comments by facsimile (FAX) or E-mail transmission. In commenting, please refer to file code BPD–882–IFC. Comments received timely will be available for pubic inspection as they are received, generally beginning approximately 3 weeks after publication of a document, in Room 309–G of the Department's offices at 200 Independence Avenue, SW., Washington, DC, on Monday through Friday of each week from 8:30 a.m. to 5 p.m. (phone: (202) 690–7890).

Copies: To order copies of the **Federal Register** containing this document, send your request to: New Orders, Superintendent of Documents, P.O. Box 371954, Pittsburgh, PA 15250–7954. Specify the date of the issue requested and enclose a check or money order payable to the Superintendent of Documents, or enclose your Visa or Master Card number and expiration date. Credit card orders can also be placed by calling the order desk at (202) 512–1800 or by faxing to (202) 512–2250. The cost for each copy is $8. As an alternative, you can view and photocopy the **Federal Register** document at most libraries designated as Federal Depository Libraries and at many other public and academic libraries throughout the country that receive the **Federal Register.**

FOR FURTHER INFORMATION CONTACT: Gertrude Saunders of the Insurance Reform Implementation Task Force (IRITF), (410) 786–5888.

SUPPLEMENTARY INFORMATION:

I. Summary of Recent Legislation

The Health Insurance Portability and Accountability Act of 1996 (HIPAA, Pub. L. 104–191) was enacted on August 21, 1996. Title I of the statute enacted reforms in both the group and individual health insurance markets, in part, to help many individuals maintain insurance coverage if they lose or leave their jobs. Sections 101 through 103 of HIPAA amended the Employee Retirement Income Security Act of 1974 (ERISA), the Public Health Service Act (PHS Act), and the Internal Revenue Code of 1986 (Code) to provide for improved access and renewability with respect to employment-related group health plans (GHPs), and health insurance coverage sold in connection with GHPs. Section 111 of HIPAA amends the PHS Act to improve availability and renewability in the individual market.

Group health plans are generally regulated by the Department of Labor under ERISA, and by the Internal Revenue Service under the Code. For health insurance coverage sold to group health plans, and sold in the individual market, the insurance issuers are regulated by the States under State law.

We believe that the individual health insurance market provisions of HIPAA recognize that States play the primary role in the regulation of insurance, and afford the States great flexibility in implementing the reforms required by the statute. While the statute provides enforcement authority to HHS in the event that a State substantially fails to enforce Federal requirements, the primary authority clearly rests with the States.

This rule only pertains to the individual market changes made to sections 2741 through 2763 and 2791 of the PHS Act by section 111 of HIPAA. For rules implementing the group market provisions of HIPAA, see the ''Interim Rules for Health Insurance Portability for Group Health Plans'' (BPD–890–IFC), which is published elsewhere in this **Federal Register**.

II. Provisions of This Interim Final Rule

A. Guaranteed Availability—General

The statue requires all health insurance issuers offering coverage in the individual market to accept any ''eligible individuals'' who apply for coverage, without imposing a preexisting condition exclusion.

A health insurance issuer means an insurance company, insurance service, or insurance organization (including an HMO) that is licensed to engage in the business of insurance in a State and that is subject to State law that regulates insurance within the meaning of section 514(b)(2) of the ERISA. The term does not include a group health plan. For purposes of this rule, we will use the term ''issuer'' to mean a health insurance issuer.

1. Definition of an Eligible Individual (§ 148.103)

An eligible individual must met several criteria:

- *The individual must have at least 18 months of creditable coverage without a significant break in coverage.*

The rules for determining creditable coverage are set forth in the group market regulations at § 146.113 and explained in the preamble to that regulation. In general, creditable coverage includes almost any type of health care coverage. A significant break in coverage is 63 days without any creditable coverage. This requirement is related to the group market rules, since an individual in the group market is protected against preexisting condition exclusions under any circumstances if the individual has 18 months of creditable coverage without a significant break. As with the group market rules, States may have requirements that are more generous to individuals. For instance, a State may require less than 18 months of creditable coverage in order to be considered an eligible individual in the individual market. It may also lengthen the significant break in coverage period from 63 days to some longer period.

We are also including a provision in § 148.120(f)(2) that deems certain

children to be eligible individuals, even if they do not have a full 18 months of creditable coverage. These are children who were covered under any creditable coverage within 30 days of birth, adoption, or placement for adoption, and have not had a significant break in coverage. Under §§ 146.111(b) and 146.117(b)(5), these children are entitled to a special enrollment period under a group health plan or group health insurance coverage, and are fully protected from the imposition of preexisting condition exclusions under the group coverage. We believe that deeming these children to be eligible individuals is necessary in order to carry out clear congressional intent to provide special protection for them.

• *The individual's most recent coverage must have been under a group health plan.*

There is no limit on the amount of time that must have been spent under group coverage—one day is sufficient. The coverage must, however, be under a group health plan as defined in Part 146, which means it must be employment-related. However, it does not have to be a group health plan that is regulated under ERISA. It may be under governmental or church plans (or under health insurance coverage offered in connection with either type of group health plan). Governmental plans are plans for employees of government entities, not public welfare or other benefit plans such as Medicare, Medicaid, or IHS.

• *The individual cannot currently be eligible for Medicare or Medicaid or covered under any other health insurance.*

This requires that the individual actually be covered under the health insurance. Except for COBRA or similar continuation coverage, the individual who has the option of purchasing some sort of health insurance and does not do so may still meet the definition of an eligible individual.

This interpretation of the law permits an individual to choose among options. In addition to the products that are available to him or her as an eligible individual, the individual may have available a conversion policy, other coverage sold in the individual market on an underwritten basis, or coverage through any associations to which the individual may be eligible to join. Eligible individuals cannot be required to obtain denials of other coverage (a common requirement of many risk pools) because the only disqualifying circumstance is ''having'' other coverage, not having other options available. Nevertheless, individuals will want to explore other options to ensure that they obtain the best coverage for the lowest cost.

• *The individual has both elected and exhausted any continuation coverage available under COBRA or a similar State program.*

This requirement means that if an individual's qualifying event entitles him or her to more than 18 months of COBRA coverage, the individual must exhaust all the COBRA coverage that is available to him or her before becoming eligible under HIPAA's individual market rules. Many State laws, by contrast, require less than 18 months. Therefore, an individual would need to aggregate prior group coverage with the coverage under the mini-COBRA to reach the minimum of 18 months of creditable coverage required to be an eligible individual. Note, however, that the exhaustion requirement refers only to the continuation coverage that is mandated under Federal law (COBRA) or a similar program under State law (sometimes referred to as ''mini-COBRA''). An individual, however, is not required to accept a ''conversion'' policy that may be available when continuation coverage ends, and should be careful about doing so. Continuation coverage meets the criterion of coverage for both the individual and group markets. An individual who accepts a conversion policy, however, maintains eligibility only for the group market and forfeits the right to be an ''eligible individual,'' for the individual market. This is so because the statute provides no portability from one individual policy to another. A conversion policy is an individual policy, not a group policy, even though prior group coverage is a prerequisite to qualifying for the conversion policy.

• *Residency requirements.* We wish to clarify that States may not require a specific period of residency for HIPAA protected eligible individuals, however, States may require that an HIPAA eligible individual be a State resident to be eligible for protection under applicable State law.

2. State Flexibility

States are given the flexibility either to enforce the Federal requirements set forth in § 148.120, or to implement an alternative mechanism, under State law, that achieves the statutory mandate of providing eligible individuals with access to individual health insurance, or comparable coverage, without preexisting condition exclusions. The statute provides that if States notify the Secretary no later than April 1, 1997, with supporting information, that they intend to implement an alternative mechanism by January 1, 1998, they will be presumed to be implementing a mechanism as of July 1, 1997 (the effective date of the statute). Alternative mechanisms are discussed in section II.F. of this preamble.

If a State chooses to enforce the Federal guaranteed availability requirements (sometimes referred to as the ''Federal fallback'' requirements), the provisions of § 148.120 apply, and must be enforced by the State under State law. If the State implements neither an alternative mechanism, nor the Federal fallback requirements, we will implement the Federal fallback provisions in that State and will enforce those requirements using the penalty provisions specified in §§ 148.200 and 148.202.

B. Alternative Coverage Under the Federal Fallback Provisions

In accordance with § 148.120(c), if the Federal fallback provisions are in effect in a State, an issuer that offers health insurance coverage in the individual market in that State may elect to limit coverage by making only two policies available to eligible individuals.

1. Limitation of Policy Forms—General

The issuer may limit the individual market coverage it offers as long as it offers two different policy forms. Both policy forms must be designed for, made generally available to, actively marketed to, and enroll both eligible and other individuals, and meet one of two requirements regarding policy forms described in § 148.120(c)(2) and (c)(3).

The statute creates an ambiguity when it indicates that policy forms that have different cost-sharing arrangements or different riders must be considered different policy forms. It is our understanding that this is inconsistent with State law definitions of a policy form, which refer to a contract form that is filed with the State, which has a number assigned to it, and which may have more than one cost-sharing arrangement. Since the statute does not define ''policy form,'' we believe the statutory intent was to leave the definition to State law.

However, we also believe the intent of the statutory requirement of two different policy forms was to ensure that eligible individuals would have some choice of coverage and/or cost for that coverage. Because differences in levels of cost sharing in out-of-pocket spending are among the most important determinants of price, for Federal enforcement purposes, we would interpret this statutory provision to mean that significant differences in deductibles or other significantly

different cost-sharing arrangements provide sufficient choice.

2. Most Popular Policies

Under § 148.120(c)(2), the health insurance issuer may choose to offer the policy forms for individual health insurance coverage with the largest, and the second largest, premium volume of all similar policy forms offered by the issuer in the State, or applicable marketing or service area, for the period involved. In the absence of applicable State standards, ''premium volume'' means earned premiums for the last reporting year. In the absence of applicable State standards, the last reporting year is the period from October 1 through September 30 of the preceding year. Blocks of business closed under applicable State law are not included in calculating premium volume.

3. Representative Policy Forms

Under § 148.120(c)(3), the health insurance issuer may choose, instead, to offer a lower-level and higher-level coverage policy form. Each of these policy forms must meet the requirements of § 148.120(c)(3)(ii), which state that issuers must include benefits substantially similar to other individual health insurance coverage offered by the issuer in the State; and must be covered under a method described in § 148.120(c)(3)(ii)(D) pertaining to risk adjustment, risk spreading, risk spreading mechanism, or financial subsidization; and must meet all applicable State requirements.

In a State that chooses to enforce the Federal fallback provisions instead of an alternative mechanism, the issuer must provide the appropriate state authorities with any documentation required by the State (§ 148.120(c)(5)(i)). In a State where we enforce the individual market provisions, the issuer must provide us with documentation that we determine to be necessary (§ 148,120(c)(5)(ii)). The following is an example of what we would expect to be a minimum level of documentation:

(A) Issuer name, address, and explanation of corporate and company structure.

(B) Information on all products offered by the issuer in the individual market.

(C) If the issuer elects the option for—

(i) The most popular policies, data on premium volumes of all policy forms offered by the issuer in the individual market; or

(ii) Representative coverage, data, assumptions, and methods used to calculate the actuarial values of the two representative policy forms.

(D) Explanation of how the issuer is complying with the provisions of HIPAA.

(E) List of all products the issuer is making or will make available to eligible individuals and an explanation of how the issuer will inform eligible individuals of these policy forms, with copies of all marketing material.

(F) Description of risk spreading and financial subsidization mechanism.

For policy forms already being marketed as of July 1, 1997 (the effective date of the Federal fallback provisions), the issuer must submit the information to HCFA no later than September 1, 1997. For other policy forms, the issuer must submit the information 90 days before the beginning of the calendar year in which the issuer wants to market the policy form.

4. Special Rules for Network Plans

An issuer that offers coverage in the individual market through a network plan may require that eligible individuals live, reside, or work within the service area for the plan (§ 148.120(d)). An issuer may also deny coverage if it has demonstrated the following, if required, to the appropriate State authority:

- It does not have the capacity to deliver services adequately to additional individual enrollees because of the volume of current group contract holders and enrollees, and to current individual enrollees. In addition, the issuer must not offer any coverage in the individual market within that service area for a period of 180 days after the coverage is denied.
- It uniformly denies coverage to an individual without regard to any health status-related factor or whether the individual is an eligible individual.

5. Application of Financial Capacity Limits

A health insurance issuer may deny coverage in the individual market to an eligible individual if the issuer has demonstrated the following, if required, to the applicable State authority (§ 148.120(e)(1)):

- It does not have the financial reserves necessary to underwrite additional coverage.
- It uniformly denies coverage to an individual without regard to any health status-related factor or whether the individual is an eligible individual.

In those States under Federal enforcement of the individual market provisions, the demonstration of a lack of capacity to provide services, or a lack of financial capacity, must be made to us rather than the State (§ 148.120(e)(2)). The issuer must not deny coverage to any eligible individual until 30 days after we receive and do not reject the required information. We are currently developing reporting requirements for this information and we request comments regarding criteria that would be fair to all issuers, and at the same time promote the intent of the law to guarantee access to health insurance coverage for all eligible individuals.

An issuer that denies coverage in any service area is provided in § 148.120(e)(1), as prohibited from offering that coverage in the individual market for a period of 180 days after the later of the date coverage is denied or the issuer demonstrates to the applicable State authority (if required under applicable State law) that the issuer has sufficient financial reserves to underwrite additional coverage. A State may apply the 180 day suspension described in § 148.120(e)(3) on a service-area-specific basis.

6. Dependent Coverage

In general, if an issuer offers policies in the individual market that provide dependent coverage, the issuer may apply a preexisting condition exclusion, as allowed under applicable State law, to dependents who are not eligible individuals (§ 148.120(f)). However, the issuer may not apply a preexisting condition exclusion on certain children who have less than 18 months creditable coverage but are protected from an exclusion under the group market rules of Part 146.

These children are dependents who were enrolled as a dependent under a group health plan within 30 days of birth, adoption, or placement for adoption and have not had a significant break in coverage. We believe that the statute did not intend to eliminate this protection for children who could not have been enrolled any earlier (that is, before birth, adoption, or placement for adoption), and thus could not possibly have aggregated 18 months of creditable coverage.

7. Construction of Provisions

The regulation clarifies several areas that are not affected by this regulation (§ 148.120(g)). A health insurance issuer offering health insurance coverage only in connection with group health plans, or only through one or more bona fide associations, or both, is not required to offer that type of coverage in the individual market. Similarly, an issuer that only offers a conversion policy in connection with a group health plan is not considered to be an issuer offering individual health insurance coverage. The premium amount that an issuer charges for coverage in the individual

market is only restricted by applicable State law. An issuer offering coverage in the individual market is not prohibited from establishing premium discounts or rebates, or modifying applicable copayments or deductibles, in return for adherence to programs of health promotion and disease prevention. Also, issuers are not required to reopen blocks of business that have been closed under applicable State law, and an issuer in the individual market is not required to offer a family coverage option with any policy form unless State law requires the issuer to do so.

In addition, if an issuer elects to sell coverage to an individual who is not an eligible individual, the issuer may apply a preexisting condition exclusion period as permitted under State law. The HIPAA group rules relating to reduction of preexisting condition exclusion periods do not apply in the individual market unless a State chooses to apply them.

8. Broad Preclusion of Preexisting Condition Exclusions for Eligible Individuals

The individual market provisions (§ 148.120(a)(2)) preclude an issuer from imposing on an eligible individual a preexisting condition exclusion as defined under section 2701(b)(1)(A) of the PHS Act. That definition is very broad, including any limitation relating to a condition based on the fact that the condition was present before the date of enrollment under the coverage, whether or not any medical advice, diagnosis, care, or treatment was recommended or received before that date.

9. Treatment of Coverage Under the Federal Employee Health Benefit Plan (FEHBP)

Federal employees are not subject to COBRA, but they may elect Federal Employee Temporary Continuation Coverage (TCC). This continuation coverage, like COBRA, is considered group coverage. While the individual is under the continuation coverage, the individual is still eligible for group coverage until that coverage has been exhausted. Therefore, the individual does not qualify as an eligible individual in the individual market by simply failing to exhaust TCC.

C. Guaranteed Renewability

Section 148.122 requires that a health insurance issuer providing individual health insurance coverage to an individual, renew or ''continue in force'' the coverage at the option of the individual. ''Continue in force'' means that the issuer maintains the same policy form that the individual purchased. The requirements in this section apply to all individuals purchasing health insurance coverage in the individual market, not only eligible individuals.

A health insurance issuer may nonrenew or discontinue health insurance coverage of an individual in the individual market only for the following reasons: nonpayment of premiums, fraud, termination of plan, movement outside service area, and cessation of association membership. If coverage is terminated based on movement outside the service area and cessation of association membership, coverage must be terminated uniformly without regard to the health status-related factor of any covered individuals. Health status-related factor is defined in § 144.103 (definitions for the group and individual health insurance markets.)

Becoming eligible for Medicare by reason of age or otherwise is not a basis for nonrenewal or termination of an individual's health insurance coverage in the individual market, because it is not included in the statute's specifically defined list of permissible reasons for nonrenewal. If permitted by State law, however, policies that are sold to individuals before they attain Medicare eligibility may contain coordination of benefit clauses that exclude payment under the policy to the extent that Medicare pays.

Issuers who decide to discontinue offering a particular type or all coverage in the individual market are subject to certain requirements outlined in § 148.122 (d) and (e). Issuers discontinuing all coverage in the individual market are prohibited from issuing coverage in the market and State involved for 5 years following the date of discontinuation of the last coverage policy not renewed (§ 148.122(f)).

Issuers may modify the health insurance coverage for a policy form only at the time of coverage renewal, if the modification is consistent with State law and effective uniformly for all individuals with that policy form (§ 148.122(g)).

In the case of health insurance coverage made available by a health insurance issuer in the individual market to individuals only through one or more associations, the reference to an ''individual'' is deemed to include a reference to the association (§ 148.122(h)).

D. Certification of Coverage

Section 148.124 specifies that an issuer in the individual market must provide a certificate of creditable coverage, and, if required, make certain other disclosures regarding an individual's coverage under an individual policy. In general, the certificates and disclosure requirements are substantially identical to the relevant provisions of § 146.115 that apply to health insurance coverage offered by issuers in the group market. The preamble accompanying the group market regulation published elsewhere in this **Federal Register** explains these procedures in detail. The certificates and other disclosure of information are intended to enable individuals to avoid or reduce preexisting condition exclusions included under subsequent group health insurance coverage the individual may obtain.

The following model is different from the model certificate in the group market regulation. The individual market model certificate provides for the date that the substantially completed application was received from the policyholder. This date tolls the significant break period.

Certificate of Individual Health Insurance Coverage

* IMPORTANT—This certificate provides evidence of your health coverage. You may need to furnish this certificate if you become eligible under a group health plan that excludes coverage for medical conditions you have before you enroll, if medical advice, diagnosis, care, or treatment is recommended or received for the condition during the 6 months before you enroll in the new plan. If you become covered under another group health plan, check with the plan administrator to see if you need to provide this certificate. You may also need this certificate to establish your right to buy coverage for yourself or your family, with no exclusion for previous medical conditions, if you are not covered under a group health plan.

1. Date of this certificate: _____
2. Name of policyholder: _____
3. Identification number of policyholder: _____
4. Name of any dependents to whom this certificate applies: _____
5. Name, address, and telephone number of issuer responsible for providing this certificate:
_____
_____
_____
6. For further information, call: _____
7. If all individual(s) identified in items 2 and 4 have at least 18 months of creditable coverage (disregarding periods of coverage before a 63-day break), check here _____ and skip items 8 and 9.
8. Date coverage began: _____
9. Date that a substantially completed application was received from the policyholder: _____
10. Date coverage ended: _____ (or check here if coverage is continuing as of the date of this certificate:_____)

Note: Separate certificates will be furnished if information is not identical for the policyholder and each dependent.

Individuals have the right to receive a certificate automatically (an automatic certificate) when they lose coverage under an individual policy. A certificate must also be provided upon a request by, or on behalf of, an individual no later than 24 months after coverage ceases. The certificate must be provided at the earliest time that an issuer, acting in a reasonable and prompt fashion, can provide the certificate. The certificate must also be provided consistent with State law.

An issuer of an individual policy is required, to the same extent as an issuer of insurance in the group market, to prepare certificates with respect to the coverage of any of the individual's dependents that are covered under the individual policy. During a transitional period until July 1, 1998, an issuer may satisfy its obligation to provide a written certificate regarding the coverage of a dependent of a policyholder by providing the name of the policyholder covered by the policy and specifying the type of coverage as family coverage. If requested to provide a certificate related to a dependent, however, the issuer must make reasonable efforts to obtain and provide the name of the dependent.

For certain types of creditable coverage, including under a State health benefits risk pool, a public health plan, and section 5(e) of the Peace Corps Act, the statute does not identify a particular entity that is responsible for providing a certificate. However, any issuer that provides coverage in connection with those programs must provide certificates.

E. Determination of an Eligible Individual

An issuer is potentially subject to civil money penalties if it denies coverage, or applies a preexisting condition exclusion to, an eligible individual, unless it can show that it did not know, or exercising reasonable diligence could not have known, of the violation. Section 148.126 specifies that the issuer is responsible for determining whether an applicant is an eligible individual, and must exercise reasonable diligence in making this determination. An issuer could, for example, include questions on the application form that would be designed to elicit information that would indicate that the applicant may be an eligible individual.

An individual seeking to establish that he or she is an eligible individual may not have a certificate of creditable coverage that establishes 18 months of creditable coverage, and that the most recent period of creditable coverage is in a group health plan. The individual has the same right to demonstrate periods of creditable coverage as in the group market. Thus the issuer must take into account all information that the individual presents, and must treat the individual as having furnished a certificate if the individual attests to the period of creditable coverage, the individual presents relevant corroborating evidence of some creditable coverage during the period, and the individual cooperates with the issuer's efforts to verify the individual's coverage.

F. State Flexibility

1. Alternative Mechanism

If a State implements an alternative mechanism as described in § 148.128, the State does not have to enforce the ''Federal fallback'' provisions for guaranteed availability, although it must still enforce the guaranteed renewability provisions set forth in § 148.122. Although the law recognizes diversity among the States by allowing for an alternative mechanism, there are minimum requirements for an alternative mechanism. Under § 148.128, an alternative mechanism must meet the following requirements:

- Provide a choice of health insurance coverage to all eligible individuals.
- Not impose any preexisting condition exclusions and affiliation periods for coverage of an eligible individual.
- Include at least one policy form of coverage that is comparable to either one of the following:

+ Comprehensive health insurance coverage offered in the individual market in the State.
+ A standard option of coverage available under the group or individual health insurance laws of the State.

- Implement one of the following:

+ The National Association of Insurance Commissioners (NAIC) Small Employer and Individual Health Insurance Availability Model Act, as it applies to individual health insurance coverage, and as revised in State regulations to meet all the requirements of Part 148 of this rule and Part 144 published elsewhere in this **Federal Register** with the group market rules.
+ The Individual Health Insurance Portability Model Act, as adopted on June 3, 1996, and revised in State regulations to meet all the requirements of Part 148 of this rule and Part 144 published elsewhere in this **Federal Register** with the group market rules.
+ A qualified high-risk pool that provides for the following:
  —Health insurance coverage (or comparable coverage) to all eligible individuals that does not impose any preexisting condition exclusion or affiliation periods with respect to this coverage for all eligible individuals.
  —Premium rates and covered benefits for that coverage consistent with standards included in the NAIC Model Health Plan for Uninsurable Individuals Act in effect on August 21, 1996, and revised in State regulations to meet all the requirements of Part 148 of this rule and Part 144 published elsewhere in this **Federal Register** with the group market rules.
+ Another mechanism—
  —That provides for risk adjustment, risk spreading, or a risk-spreading mechanism (among issuers or policies of an issuer) or otherwise provides for some financial subsidization for eligible individuals, including through assistance to participating issuers, or
  —Under which each eligible individual is provided a choice of all individual health insurance coverage otherwise available.

2. Permissible Forms of Mechanisms

A private or public individual health insurance mechanism (such as a health insurance coverage pool or program, mandatory group conversion policy, guaranteed issue of one or more plans of individual health insurance coverage, or open enrollment by one or more health insurance issuers), or combination of these mechanisms, that is designed to provide access to health benefits for individuals in the individual market in the State, may constitute an acceptable alternative mechanism.

3. Transition Rules for Establishing an Acceptable Alternative Mechanism

We presume a State to be implementing an acceptable alternative mechanism as of July 1, 1997, if the State submits a notice and required information that meets the notice and information requirements for an acceptable alternative mechanism described in § 148.128(c), no later than April 1, 1997, and we do not make a determination within 90 days (except as provided in § 148.128(e)(3)(ii) for suspensions of the review period) that the State will not be implementing a

mechanism reasonably designed to be an acceptable alternative mechanism as of January 1, 1998. To assist States in meeting the April 1, 1997, statutory deadline for notifying HCFA and submitting the necessary information, HCFA will consider postmark dates, special delivery service dates or other such dates as the date of receipt.

4. Delay Permitted for Certain States

If a State notifies us that its legislature is not meeting in a regular session between August 21, 1996, and August 20, 1997, our presumption that the State is implementing an acceptable alternative mechanism will continue until July 1, 1998, if the State meets the notice and information requirements in § 148.128(d).

5. General Rules for Establishing an Alternative Mechanism

A State that chooses to implement an acceptable alternative mechanism must submit the notice and supporting information specified in § 148.128(e). After receiving the information, if we do not make a preliminary determination as described in § 148.128(e)(2), within 90 days of receiving the State's information (except as provided in § 148.128(e)(3)(ii), that the mechanism is not accepted, the (proposed) alternative mechanism is presumed to be an acceptable alternative mechanism. If we do make a preliminary determination, after consultation with the chief executive officer of the State, that an alternative mechanism is not acceptable, we will notify the State, in writing, of the consequences of failing to implement an acceptable alternative mechanism and permit the State a reasonable opportunity to modify the mechanism or adopt another mechanism. In determining a reasonable opportunity, we will take into consideration a State's legislative calendar and process. If after taking all of these actions, our final determination is that a State's alternative mechanism is not an acceptable mechanism or the State is not substantially enforcing an acceptable mechanism, we will notify the State, in writing, as provided in § 148.128(e)(4)(ii).

A State may request that we notify it, after reviewing the material submitted, if we did not make a preliminary determination that the mechanism is not an acceptable alternative mechanism (§ 148.128(e)(4)).

6. Suspension of Review Period

If we notify a State of our need for additional information or further discussions on its submission, we will suspend the review period, as described in § 148.128(e)(3)(ii) until the State provides the necessary information. If the State chooses not to provide the necessary information or our discussions with the State cannot be concluded satisfactorily, we may make a preliminary determination that the mechanism is not an acceptable alternative mechanism.

7. Review Criteria

The law gives States substantial flexibility in devising alternative mechanisms. If a State chooses to submit a proposed alternative mechanism, the State determines what to submit. We must, however, be able to determine whether the mechanism is designed to ensure that eligible individuals are given the required access to insurance coverage. Our review will focus on results for eligible individuals. Our main concern is that the State submission show the analysis and the reasoning behind the design of the proposed alternative mechanism, and a reasonable assessment of the likelihood that the mechanism will achieve the legislative objectives. These requirements are described in § 148.128(g).

8. Continued Application and Effective Dates

A State must provide information necessary for us to review its mechanism's implementation every 3 years, or before implementing any significant change, to continue to be presumed to have an acceptable alternative mechanism (§ 148.128(f)). We suggest that a State inform us of any significant change to its alternative mechanism 120 days before implementing the change.

For alternative mechanisms submitted after April 1, 1997, if we do not make a preliminary determination within the review period, the alternative mechanism is effective 90 days after the end of the 90-day review period (except as provided in § 148.128(e)(3)(ii).

9. Limitation on HCFA's Authority

We do not make a preliminary or final determination on any basis other than that a mechanism is not considered an acceptable alternative mechanism or is not being implemented by the State (§ 148.128(h)).

G. Enforcement

Sections 2741 through 2763 and 2791 of the PHS Act, as implemented by Part 148 of these regulations, impose requirements on health insurance issuers that offer coverage in the individual market in a State. The statute makes clear that it is solely within the discretion of the States, in the first instance, whether to take on the responsibility for enforcing those requirements, or whether to leave enforcement to the Federal government. We anticipate that the States will choose to enforce the requirements. However, the statute also makes clear that if a State does not substantially enforce the requirements, we must enforce them. Section 148.200 sets forth the procedures that we will follow in the event that a question is raised about the State's enforcement. The procedures are designed to give the State every opportunity to show why Federal enforcement is not required. The regulation also makes clear that the process will not be triggered unless we are satisfied that there has been a reasonable effort to exhaust any State remedies. However, if, after giving the State a reasonable opportunity to enforce, we make a final determination that a State is not substantially enforcing these requirements, we will enforce the requirements using the civil money penalties provided for under § 148.202.

Section 148.202 describes the process for imposing civil money penalties against issuers that fail to comply with the requirements of Part 148 requiring them to make coverage available to eligible individuals, to renew all individual coverage, and to provide certificates of creditable coverage. If we receive a complaint or other information that indicates that the issuer is not in compliance with these requirements, we will give the issuer an opportunity to respond. If we assess the penalty, which can consist of up to $100 for each day, for each individual whose rights are violated, the regulation provides appeal rights.

H. Preemption

Section 2762 of the PHS Act specifies that, in general, State laws regarding health insurance issuers are not preempted unless they ''prevent the application of'' a requirement of the individual market rules in Part 148 of this rule or Part 144 published elsewhere in this **Federal Register** with the group market rules. Within these restrictions, however, the conference report makes clear that the conferees intended ''the narrowest preemption'' of State law, and indicates that State laws that are ''broader'' than Federal requirements would not ''prevent the application of'' the HIPAA requirements.

The statute, however, makes clear that nothing in sections 2741 through 2763 and 2791 of the PHS Act can be construed to affect or modify the

provisions of section 514 of ERISA, which limits State regulation of group health plans.

I. Excepted Benefits

Section 146.145 specifies that certain benefits are excluded from certain requirements of the group market only if they are provided under a separate policy, certificate, or contract of insurance, or are otherwise not an integral part of the plan. Under § 148.220, for purposes of the individual market, these benefits are excluded if provided under a separate policy certificate, or contract of insurance. The term ''integral to a plan'' does not apply in the individual market.

In addition, in the group market, coverage for only a specified disease or illness or hospital indemnity or other fixed dollar indemnity insurance is excepted only if the following applies:

• It is provided under a separate policy, certificate, or contract of insurance.

• There is no coordination between the provision of the benefits and an exclusion of benefits under any group health plan maintained by the same plan sponsor. (This does not apply in the individual market.)

• The benefits are paid with respect to an event without regard to whether benefits are provided with respect to the event under any group health plan maintained by the same plan sponsor. (This does not apply in the individual market.)

The requirements of Part 148 do not apply to ''excepted benefits,'' which are benefits under one or more (or any combination) of the following:

• Fully excepted benefits—

—Coverage only for accident (including accidental death and dismemberment);
—Disability income insurance;
—Liability insurance, including general liability insurance and automobile liability insurance;
—Coverage issued as a supplement to liability insurance;
—Workers' compensation or similar insurance;
—Automobile medical payment insurance;
—Credit-only insurance (for example, mortgage insurance); and
—Coverage for onsite medical clinics.

• Other excepted benefits, which are excepted only if they are provided under a separate policy, certificate, or contract of insurance—

—Limited scope dental or vision benefits;
—Benefits for long-term care;
—Coverage only for a specified disease or illness (for example, cancer policies) as long as the policy does not coordinate benefits;
—Hospital indemnity or other fixed indemnity insurance (for example, $100 per day) as long as the policy does not coordinate benefits;
—Medicare supplemental health insurance, also known as Medigap or MedSup insurance (as defined in section 1882(g)(1) of the Social Security Act);
—Supplemental coverage provided under Chapter 55 Title 10 of the United States Code (also known as CHAMPUS supplemental programs); and
—Similar supplemental coverage provided under a group health plan.

J. Associations in the Individual Market

As we discuss in the preamble to the interim final rules for the group market rules published elsewhere in this **Federal Register**, an association policy that is not offered in connection with an employment-related group health plan falls under the individual market provisions of HIPAA, even if a State otherwise regulates it as ''association group'' coverage. In response to the notice published in the **Federal Register** on December 30, 1996 (61 FR 68697), we received a large number of comments relating to coverage under ''college plans,'' which provide association group coverage for students (as distinguished from employees of a college or university).

The following discussion of college plans, which generally applies to any association coverage in the individual market, addresses the commenters' concerns.

• College plans are clearly creditable coverage under § 146.113(a)(1) because they meet the definition of ''health insurance coverage'' under part 144 of the group market rules.

• If an issuer offers student coverage through a ''bona fide association,'' that meets all six requirements set forth in the definition of these entities in part 144 of the group market rules, the issuer benefits because it does not have to make the coverage available in the individual market to eligible individuals, and does not have to renew coverage for a student who leaves the association. The student also benefits because a bona fide association must make the coverage available to all association members regardless of any health status-related factors. If the college plan is not a bona fide association, however, it does have to guarantee coverage to all eligible individuals in the individual market and must renew the coverage indefinitely at the option of former students. In addition, State laws may be more stringent than the Federal definition of bona fide association.

• The commenters were concerned that students should be able to move from coverage under an employment-related group health plan (through their own or their parents' employment) to a college plan, between college plans, and from a college plan to individual coverage, with guaranteed availability and without preexisting condition exclusions. These concerns cannot be fully addressed under the current law. Because HIPAA provides for full portability from individual products to group market coverage, moving from a college plan to a employer plan presents no problem, since the coverage under the college plan constitutes creditable coverage that reduces any preexisting condition exclusion under the group health plan. However, a student moving from a group health plan to college or other individual coverage will not qualify for these protections unless he or she qualifies as an ''eligible individual'' as defined in § 148.103. To gain this status, a student must exhaust any COBRA or State ''mini-COBRA'' continuation coverage available. A child aging out of a parent's coverage generally qualifies for 36 months of COBRA. This puts the student in the position of either paying the higher cost of continuation coverage for the duration of the continuation coverage, or taking the lower-cost student coverage subject to a preexisting condition exclusion of any length permitted under State law. HIPAA places no limits on preexisting condition exclusion in the individual market for noneligible individuals.

Moreover, HIPPA does not provide any guaranteed availability or protection against preexisting condition exclusions for students moving from one individual policy to another. This is true even if the student originally enrolled in a student plan as an eligible individual, since that status is applicable only when the student's most recent coverage is under a group health plan.

III. Regulatory Impact Analysis

Ordinarily, we would include a Regulatory Impact Statement in this section of the document. We have chosen, however, to address the economic impact analysis of this regulation in a combined impact statement contained in the interim final rule for the group market provisions (BPD–890–IFC). A combined impact analysis has been prepared because of the close connection between the effects of HIPAA's group market reforms and the reforms in the individual insurance

market, and because of the overlap of issuers participating in both the group and individual market. The regulatory burdens placed on entities in the group and individual markets are virtually identical in many respects, notably in the certification process. There are also economic effects that crossover from one market segment to the other because of HIPPA provisions, such as the group-to-individual portability provision, which may have an effect on premiums in either or both market segments. We believe a single discussion of the economic impact is the most appropriate means of highlighting the similarities and discussing the interactions between the two market segments.

In accordance with the provisions of Executive Order 12866, this regulation was reviewed by the Office of Management and Budget.

IV. Collection of Information Requirements

Under the Paperwork Reduction Act of 1995, we are required to provide 60-day notice in the **Federal Register** and solicit public comment before a collection of information requirement is submitted to the Office of Management and Budget (OMB) for review and approval. In order to fairly evaluate whether an information collection should be approved by OMB, section 3506(c)(2)(A) of the Paperwork Reduction Act of 1995 requires that we solicit comment on the following issues:

- The need for the information collection and its usefulness in carrying out the proper functions of our agency.
- The accuracy of our estimate of the information collection burden.
- The quality, utility, and clarity of the information to be collected.
- Recommendations to minimize the information collection burden on the affected public, including automated collection techniques.

We are, however, requesting an emergency review of this notice. In compliance with the requirement of section 3506(c)(2)(A) of the Paperwork Reduction Act of 1995, we have submitted to the Office of Management and Budget (OMB) the following requirements for emergency review. We are requesting an emergency review because the collection of this information is needed before the expiration of the normal time limits under OMB's regulations at 5 CFR, Part 1320. This is necessary to ensure compliance with section 111 of HIPAA necessary to implement congressional intent with respect to guaranteeing availability of individual health insurance coverage to certain individuals with prior group coverage. We cannot reasonably comply with the normal clearance procedures because public harm is likely to result because eligible individuals will not receive the health insurance protections under the statute.

We are requesting that OMB provide a 30-day public comment period, from the date of publication, with OMB approval by June 1, 1997 and a 180-day approval. During this 180-day period, we will publish a separate **Federal Register** notice announcing the initiation of an extensive 60-day agency review and public comment period on these requirements. We will submit the requirements for OMB review and an extension of this emergency approval.

Type of Information Request: New collection.

Title of Information Collection: Individual Health Insurance.

Reform: Portability from Group to Individual Coverage; Federal Rules for Access in the Individual Market; State Alternative Mechanisms to Federal Rules BPD–882–IFC.

Form Number: HCFA–R–205.

Use: These rules ensure access to the individual insurance market for certain individuals and allows the States to implement their own program to meet the HIPAA requirements for access to the individual market. The information collection requirements outlined in this rule document the record keeping necessary for issuers and States to ensure individuals receive protection under section 111 of HIPAA.

Frequency: On occasion.

Affected Public: States, businesses or other for profit, not-for-profit institutions, Federal Government, individuals or households.

Number of Respondents: 1,035.

Total Annual Responses: 3.5 million in 1997; 3 million each in 1998 and 1999;

Total Annual Hours Requested: 335,000 to 586,000 hours in 1997; 384,000 to 882,000 in 1998; and 377,000 to 882,000 in 1999.

Total Annual Cost: $4.9 million to $6.8 million in 1997; $5.1 million to $8.7 million in 1998; and $5.4 million to $8.7 million in 1999.

Sections 148.120, 148.122, 148.124, 148.126, 148.128, 148.200, and 148.202 of this document contain information collection requirements. As required by section 3504(h) of the Paperwork Reduction Act of 1995, we have submitted a copy of this document to OMB for its review of these information collection requirements.

We are soliciting public comment on each of these issues for the following sections of this document that contain information collection requirements:

Section 148.120 Guaranteed availability of individual health insurance coverage to certain individuals with prior group coverage.

States are given the flexibility either to enforce the Federal requirements set forth in § 148.120, or to implement an alternative mechanism, under State law, that achieves the statutory mandate of providing eligible individuals with access to individual health insurance, or comparable coverage, without preexisting condition exclusions. However, a State could choose to do nothing, resulting in Federal enforcement of the individual market regulations under HIPAA. Thirty States have indicated to us an intent to implement an alternative mechanism under § 148.128. The information collection requirements associated with implementing and enforcing the alternative mechanism are discussed below for § 148.128.

If a State chooses to enforce the Federal guaranteed availability requirements (sometimes referred to as the ''Federal fall back'' requirements), the provisions of § 148.120 apply, and must be enforced by the State under State law. Since many of these requirements are enforced under existing State law, for these instances, they are exempt from the Paperwork Reduction Act (PRA) as described under 5 CFR 1320.3(b)(3). Although applicable PRA burden will vary by State and issuer, we anticipate that ten States will be required to review materials submitted by at most 325 issuers per State on an annual basis to ensure compliance with the requirements of all products guaranteed or alternative coverage, which are not currently required under State laws and regulations. Therefore, the PRA burden imposed under this option is the time required by the ten States to review the materials submitted by the issuers. This burden is 1,625 hours based on each of the ten States reviewing the material for 30 minutes for each issuer on an annual basis. We estimate the cost associated with this burden to be $24,375.

If a State implements neither an alternative mechanism, nor the Federal fall back requirements, we will implement the Federal fall back provisions in that State and will enforce those requirements using the penalty provisions specified in §§ 148.200 and 148.202. We anticipate that fewer than ten States will rely on Federal enforcement of the statute. In particular, the only jurisdictions that we believe

will choose this option are the five U.S. territories.

This section also requires an issuer who elects the alternative coverage option to document any actuarial calculations necessary to satisfy State and/or Federal oversight provisions referenced in § 148.120. Since the majority of issuers rely on automated means of storing their calculations, we estimate the annual burden for this record keeping activity to be 25 hours. This is based on the assumption that it will take approximately 10 issuers per State, in 15 States, on an annual basis, 10 minutes per issuer, to electronically store and verify the storage of their calculations. We estimate the cost associated with this burden to be $375.

Section 148.122 Guaranteed renewability of individual health insurance coverage.

In this section issuers are only required to report if they are discontinuing a particular type of coverage or discontinuing all coverage. This requirement exists in the absence of this regulation because under current insurance practices, State insurance departments oversee discontinuance of insurance products in their State as a normal business practice. Therefore, these information collection requirements are exempt from the PRA under 5 CFR 1320.3(b)(2) and 5 CFR 1320.3(b)(3). However, under HIPAA, States must review policies during their oversite process to make sure there is a guarantee renewability clause in each policy. For the 21 States that currently require guaranteed renewability, it is our understanding that this is normal business practice. For the other 34 States, however, we see this State burden to be about 10 minutes per policy, since States already review policies for other requirements and this process does not prescribe a timetable for reviewing the policies. We see this as a total annual burden of 20,000 hours. We estimate the cost associated with this burden to be $300,000. If the State identifies a violation and a State has to take some action, we believe that each State will be required to initiate fewer than 10 administrative actions on an annual basis against specific individuals or entities who failed to implement the Federal guarantee renewability requirements.

Section 148.124 Certification and disclosure of coverage.

Section 148.124 specifies that an issuer in the individual market must provide a written certificate of creditable coverage, and, if required, make other certain disclosures regarding an individual's coverage under an individual policy. In general, the certification and disclosure requirements are substantially identical to the relevant provisions of § 146.115 that apply to health insurance coverage offered by issuers in the group market. The preamble accompanying the group market regulation explains these procedures in detail. In general, the certificates from issuers in the individual market and other disclosure of information are intended to enable individuals to avoid or reduce preexisting condition exclusions included under subsequent group health insurance coverage the individual may obtain.

Individuals have the right to receive a certificate automatically (an automatic certificate) when they lose coverage under an individual policy. A certificate must also be provided upon a request by, or on behalf of, an individual for the period not later than 24 months after coverage ceases. The certificate must be provided at the earliest time that an issuer, acting in a reasonable and prompt fashion, can provide the certificate. The certificate must also be provided consistent with State law.

An issuer of an individual policy is required, to the same extent as an issuer of insurance in the group market, to prepare certificates with respect to the coverage of any of the individual's dependents that are covered under the individual policy.

We anticipate that 3 million individual market-based certificates will be generated on an annual basis. We are assuming that the majority of certificates issued in the individual market will require issuers to find out the application date since many individuals will have less than 18 months of credible coverage with that issuer.

The range of time estimates, shown in the table below, are based on discussions with industry individuals. We believe that as a routine business practice, the issuers' administrative staff have the necessary information readily available to generate the required certificates. In addition, we have determined that the majority of issuers have or will have the capability to automatically computer generate and disseminate the necessary certification when appropriate.

Year	Total respondents	Total responses	Average time (in minutes) per response (range)	Burden hours (range)	Cost (range)
1997	1,000	3,418,052	4.63	263,548	$3,897,932
			8.95	509,665	5,716,826
1998	1,000	2,929,759	6.94	338,781	4,542,924
			17.11	835,517	8,035,131
1999	1,000	2,929,759	6.81	332,480	4,746,736
			17.11	835,517	8,035,131

Section 148.126 Determination of an eligible individual.

In this section, issuers may maintain records for those individuals who they determine are not HIPAA eligible individuals. We estimate this to be on average less than 50 individuals per the 1,000 issuers nationwide each year. At 20 minutes per record, this represents an annual burden of 16,667 hours. We estimate the cost associated with this burden to be $183,000.

Section 148.128 State flexibility in individual market reforms—alternative mechanisms.

As explained above, 30 or more States may implement acceptable alternative mechanisms as allowed under this section. It is estimated that this reporting burden will range from 33,000 to 38,500 hours depending on the number of States that choose to submit the required information. We estimate the cost associated with this burden to be $495,000 to $577,500.

The information collection requirements associated with submitting the required documentation outlining a State's alternative mechanism is currently approved under emergency OMB approval number 0938–0699 which expires on 07/31/97. The information collection requirements

currently approved in this section will be re-approved with the remaining information collection requirements referenced in the HHS PRA section.

Section 148.200 Enforcement and Section 148.202 Civil money penalties.

We anticipate identifying violations through individual nonstandardized consumer complaints. Therefore, the complaints submitted and our enforcement activities do not fall within the requirements of the PRA, as outlined in 5 CFR 1320.3(c) and 5 CFR 1320.4(a).

We have submitted a copy of this notice to OMB for its review of these information collections. A notice will be published in the **Federal Register** when approval is obtained. Interested persons are invited to send comments regarding the burden or any other aspect of these collections of information requirements.

If you comment on these information collection and record keeping requirements, please mail copies directly to the following addresses:

Health Care Financing Administration, Office of Financial and Human Resources, Management Planning and Analysis Staff, Room C2–26–17, 7500 Security Boulevard, Baltimore, MD 21244–1850.

Office of Information and Regulatory Affairs, Office of Management and Budget, Room 10235, New Executive Office Building, Washington, DC 20503, Attn: Allison Herron Eydt, HCFA Desk Officer.

V. Response to Comments

Because of the large number of items of correspondence we normally receive on **Federal Register** documents published for comment, we are not able to acknowledge or respond to them individually. We will consider all comments we receive by the date and time specified in the **DATES** section of this preamble, and, if we proceed with a subsequent document, we will respond to the comments in the preamble to that document.

VI. Interim Rules and Request for Comments

Section 2792 of the PHS Act, provides in part, that HHS may promulgate any interim final rules as they determine are appropriate to carry out the provisions of the new Part B of the PHS Act. Under section 553(b) of the Administrative Procedure Act (5 U.S.C. 551 et seq.), a general notice of proposed rulemaking is not required when the agency, for good cause, finds that notice and public comment thereon are impracticable, unnecessary or contrary to the public interest.

These rules are being adopted on an interim basis, rather than as proposed rules, because the Department has determined that, without prompt guidance, some members of the regulated community will have difficulty complying with the HIPAA's certification requirements and could be in violation of the statute. The Congress expressly intended that the certification and prior creditable coverage provisions serve as the mechanism for increasing the portability of health coverage for individuals. Without the Department's guidance, issuers will likely be unable to produce the necessary amendments to policy documents reflecting HIPAA's new requirements, as well as the appropriate certifications of prior coverage that would eliminate preexisting condition exclusion periods for eligible individuals. Moreover, without the Department's prompt guidance, insured individuals will not understand the benefit to them of having a certificate of prior coverage to present upon entering the individual health insurance market and will likely have greater difficulty proving that they are entitled to health coverage.

HIPAA's portability requirements will affect the regulated community in the immediate future. HIPAA's certification requirements are effective for all issuers on June 1, 1997. HIPAA's underlying requirements concerning establishing periods of prior creditable coverage and eliminating pre-existing condition exclusions in the individual market are generally applicable July 1, 1997. Issuers and individuals will need guidance on how to comply with the new statutory provisions before this effective date. The rules have been written in order to ensure that issuers of individual health insurance, as well as individuals, are provided timely guidance concerning compliance with these recently enacted amendments to the PHS Act. The rules provide guidance on these statutory changes, and are being adopted on an interim basis because the Department finds that issuance of such regulations in interim final form with a request for comments is appropriate to carry out the new regulatory structure imposed by HIPAA on health insurance issuers. In addition, the rules are necessary to ensure that issuers, as well as individuals, are provided timely guidance concerning compliance with new and important disclosure obligations imposed by HIPAA.

Section 2792 of the PHS Act authorizes the Department to issue regulations necessary to carry out the amendments made by section 111 of HIPAA by April 1, 1997. Issuance of a notice of proposed rule making with public comment prior to issuing a final rule could delay significantly the issuance of essential guidance and prevent the Department from complying with its statutory rulemaking deadline. Furthermore, although these rules are being adopted on an interim basis, the Department is inviting interested persons to submit written comments on the rules for consideration in the development of the final rules relating to HIPAA. Development of subsequent rules may be issued in advance of January 1, 1998.

For the foregoing reasons, the Department finds that the publication of a proposed regulation, for the purpose of notice and public comment, would be impracticable, unnecessary, and contrary to the public interest. However, we are providing a 90-day period for public comment, as indicated at the beginning of this rule.

List of Subjects in 45 CFR Part 148

Administrative practice and procedure, Health care, Health insurance, Penalties, Reporting and recordkeeping requirements.

For the reasons set forth in the preamble, 45 CFR Subtitle A is amended as set forth below: A new Part 148, consisting of §§ 148.101 through 148.220, is added to Subchapter B to read as follows:

PART 148—REQUIREMENTS FOR THE INDIVIDUAL HEALTH INSURANCE MARKET

Subpart A—General Provisions

Sec.
148.101 Basis and purpose.
148.102 Scope, applicability, and effective dates.
148.103 Definitions.

Subpart B—Requirements Relating to Access and Renewability of Coverage

148.120 Guaranteed availability of individual health insurance coverage to certain individuals with prior group coverage.
148.122 Guranteed renewability of individual health insurance coverage.
148.124 Certification and disclosure of coverage.
148.126 Determination of an eligible individual.
148.128 State flexibility in individual market reforms—alternative mechanisms.

Subpart C—[Reserved]

Subpart D—Enforcement; Penalties; Preemption

Sec.
148.200 Enforcement by State; determination regarding failure to enforce.
148.202 Civil money penalties.

148.210 Preemption.
148.220 Excepted benefits.

Authority: Secs. 2741 through 2763, 2791, and 2792 of the Public Health Service Act (42 U.S.C. 300gg–41 through 300gg–63, 300gg–91, and 300gg–92).

Subpart A—General Provisions

§ 148.101 Basis and purpose.

This part implements sections 2741 through 2763 and 2791 and 2792 of the PHS Act. Its purpose is to improve access to individual health insurance coverage for certain eligible individuals who previously had group coverage, and to guarantee the renewability of all coverage in the individual market.

§ 148.102 Scope, applicability, and effective dates.

(a) *Scope and applicability*. (1) Individual health insurance coverage includes all health insurance coverage (as defined in 45 CFR 144.103) that is neither health insurance coverage sold in connection with an employment-related group health plan, nor short-term, limited duration coverage as defined in 45 CFR 144.103. In some cases, coverage that may be considered group coverage under State law (such as coverage sold through certain associations) is considered individual coverage.

(2) The requirements of this part that pertain to guaranteed availability of individual health insurance coverage for certain eligible individuals apply to all issuers of individual health insurance coverage in a State, unless the State implements an acceptable alternative mechanism as described in § 148.128. The requirements that pertain to guaranteed renewability for all individuals apply to all issuers of individual health insurance coverage in the State, regardless of whether a State implements an alternative mechanism.

(b) *Effective date*. Except as provided in § 148.124 (certificate of coverage) and § 148.128 (alternative State-mechanisms), the requirements of this part apply to health insurance coverage offered, sold, issued, renewed, in effect, or operated in the individual market after June 30, 1997, regardless of when a period of creditable coverage occurs.

§ 148.103 Definitions.

Unless otherwise provided, the following definition applies:

Eligible individual means an individual who meets the following conditions:

(1) The individual has at least 18 months of creditable coverage (as determined under 45 CFR 146.113) as of the date on which the individual seeks coverage under this part.

(2) The individual's most recent prior creditable coverage was under a group health plan, governmental plan, or church plan (or health insurance coverage offered in connection with any of these plans).

(3) The individual is not eligible for coverage under any of the following:

(i) A group health plan.

(ii) Part A or Part B of Title XVIII (Medicare) of the Social Security Act.

(iii) A State plan under Title XIX (Medicaid) of the Social Security Act (or any successor program).

(4) The individual does not have other health insurance coverage.

(5) The individual's most recent coverage was not terminated because of nonpayment of premiums or fraud. (For more information about nonpayment of premiums or fraud, see 45 CFR 146.152(b)(1) and (b)(2).)

(6) If the individual has been offered the option of continuing coverage under a COBRA continuation provision or a similar State program, the individual has both elected and exhausted the continuation coverage.

Subpart B—Requirements Relating to Access and Renewability of Coverage

§ 148.120 Guaranteed availability of individual health insurance coverage to certain individuals with prior group coverage.

(a) *General rule*. Except as provided for in paragraph (c) of this section, an issuer that furnishes health insurance coverage in the individual market must meet the following requirements with respect to any eligible individual who requests coverage:

(1) May not decline to offer coverage or deny enrollment under any policy forms that it actively markets in the individual market, except as permitted in paragraph (c) of this section concerning alternative coverage when no State mechanism exists. An issuer is deemed to meet this requirement if, upon the request of an eligible individual, it acts promptly to do the following:

(i) Provide information about all available coverage options.

(ii) Enroll the individual in any coverage option the individual selects.

(2) May not impose any preexisting condition exclusion on the individual.

(b) *Exception*. The requirements of paragraph (a) of this section do not apply to health insurance coverage offered in the individual market in a State that chooses to implement an acceptable alternative mechanism described in § 148.128.

(c) *Alternative coverage permitted where no State mechanism exists*. (1) If the State does not implement an acceptable alternative mechanism under § 148.128, an issuer may elect to limit the coverage required under paragraph (a) of this section if it offers eligible individuals at least two policy forms that meet the following requirements:

(i) Each policy form must be designed for, made generally available to, and actively marketed to, and enroll, both eligible and other individuals.

(ii) The policy forms must be either the issuer's two most popular policy forms (as described in paragraph (c)(2) of this section) or representative samples of individual health insurance offered by the issuer in the State (as described in paragraph (c)(3) of this section).

(2) *Most popular policies*. The *two most popular policy forms* means the policy forms with the largest, and the second largest, premium volume for the last reporting year, for policies offered in that State. In the absence of applicable State standards, *premium volume* means earned premiums for the last reporting year. In the absence of applicable State standards, the last reporting year is the period from October 1 through September 30 of the preceding year. Blocks of business closed under applicable State law are not included in calculating premium volume.

(3) *Representative policy forms*—(i) *Definition of weighted average*. Weighted average means the average actuarial value of the benefits provided by all the health insurance coverage issued by one of the following:

(A) An issuer in the individual market in a State during the previous calendar year, weighted by enrollment for each policy form, but not including coverage issued to eligible individuals.

(B) All issuers in the individual market in a State if the data are available for the previous calendar year, weighted by enrollment for each policy form.

(ii) *Requirements*. The two representative policy forms must meet the following requirements:

(A) Include a lower-level coverage policy form under which the actuarial value of benefits under the coverage is at least 85 percent but not greater than 100 percent of the weighted average.

(B) Include a higher-level coverage policy form under which the actuarial value of the benefits under the coverage is at least 15 percent greater than the actuarial value of the lower-level coverage policy form offered by an issuer in that State and at least 100 percent, but not greater than 120 percent of the weighted average.

(C) Include benefits substantially similar to other individual health

insurance coverage offered by the issuer in the State.

(D) Provide for risk adjustment, risk spreading, or a risk spreading mechanism, or otherwise provide some financial subsidization for eligible individuals.

(E) Meet all applicable State requirements.

(iii) *Actuarial value of benefits.* The actuarial value of benefits provided under individual health insurance coverage must be calculated based on a standardized population, and a set of standardized utilization and cost factors under applicable State law.

(4) *Election.* All issuer elections must be applied uniformly to all eligible individuals in the State and must be effective for all policies offered during a period of at least 2 years.

(5) *Documentation.* The issuer must document the actuarial calculations it makes as follows:

(i) *Enforcement by State.* In a State that elects to enforce the provisions of this section in lieu of an alternative mechanism under § 148.128, the issuer must provide the appropriate State authorities with the documentation required by the State.

(ii) *Enforcement by HCFA.* If HCFA acts to enforce the provisions of this section under § 148.200, the issuer must provide to HCFA, within the following time frames, any documentation HCFA requests:

(A) For policy forms already being marketed as of July 1, 1997—no later than September 1, 1997.

(B) For other policy forms—90 days before the beginning of the calendar year in which the issuer wants to market the policy form.

(d) *Special rules for network plans.* (1) An issuer that offers coverage in the individual market through a network plan may take the following actions:

(i) Specify that an eligible individual may only enroll if he or she lives, resides, or works within the service area for the network plan.

(ii) Deny coverage to an eligible individual if the issuer has demonstrated the following to the applicable State authority (if required by the State):

(A) It does not have the capacity to deliver services adequately to additional individual enrollees because of its obligations to provide services to current group contract holders and enrollees, and to current individual enrollees.

(B) It uniformly denies coverage to individuals without regard to any health status-related factor, and without regard to whether the individuals are eligible individuals.

(iii) Not offer any coverage in the individual market, within the service area identified for purposes of paragraph (d)(1)(ii) of this section, for a period of 180 days after the coverage is denied.

(2) In those States in which HCFA is enforcing the individual market provisions of this part in accordance with § 148.200, the issuer must make the demonstration described in paragraph (d)(1)(ii) of this section to HCFA rather than to the State, and the issuer may not deny coverage to any eligible individual until 30 days after HCFA receives and approves the information.

(e) *Application of financial capacity limits.* (1) An issuer may deny coverage to an eligible individual if the issuer has demonstrated the following to the applicable State authority (if required by the State):

(i) It does not have the financial reserves necessary to underwrite additional coverage.

(ii) It uniformly denies coverage to all individuals in the individual market, consistent with applicable State law, without regard to any health status-related factor of the individuals, and without regard to whether the individuals are eligible individuals.

(2) In those States in which HCFA is enforcing the individual market provisions of this part in accordance with § 148.200, the issuer must make the demonstration described in paragraph (e)(1) of this section to HCFA rather than to the State, and the issuer may not deny coverage to any eligible individual until 30 days after HCFA receives and approves the information.

(3) An issuer that denies coverage in any service area according to paragraph (e)(1) of this section is prohibited from offering that coverage in the individual market for a period of 180 days after the later of the date—

(1) The coverage is denied; or

(ii) The issuer demonstrates to the applicable State authority (if required under applicable State law) that the issuer has sufficient financial reserves to underwrite additional coverage.

(4) A State may apply the 180-day suspension described in paragraph (e)(3) of this section on a service-area-specific basis.

(f) *Rules for dependents*—(1) *General rule.* If an eligible individual elects to enroll in individual health insurance coverage that provides coverage for dependents, the issuer may apply a preexisting condition exclusion on any dependent who is not an eligible individual.

(2) *Exception for certain children.* A child is deemed to be an eligible individual if the following conditions are met:

(i) The child was covered under any creditable coverage within 30 days of birth, adoption, or placement for adoption (or longer if the State provides for a longer special enrollment period than required under 45 CFR 146.117).

(ii) The child has not had a significant break in coverage.

(3) *Examples.* The following examples illustrate the requirements of this paragraph (f) for certain children:

Example 1: Individual *A* had self-only coverage under his employer's group health plan for five years. *A* has two children, ages 11 and 15, but never enrolled in family coverage. *A* leaves his job to become self-employed, and qualifies as an eligible individual because he is not entitled to any continuation coverage, Medicare or Medicaid, and has no other health insurance coverage. He applies to Issuer *R* for coverage in the individual market under a policy with family coverage that *R* makes available to eligible individuals. *R* must sell *A* the policy, but he may refuse coverage to *A*'s children, or may apply a preexisting condition exclusion to them if allowed under applicable State law, because they did not have prior creditable coverage, and therefore do not qualify as eligible individuals.

Example 2: Individual *B* was also covered under a group health plan for 5 years before losing his job. He originally had coverage only for himself and his wife, but 3 months before his employment ended, his wife had a baby. *B* took advantage of the special enrollment period that applied, changed to family coverage, and enrolled the baby in the group health plan within 20 days. Immediately after losing his job, *B* applied to Issuer *R* for family converge. *B* and his wife qualify as eligible individuals, and the baby is deemed to be an eligible individual even though she has less than three months of creditable coverage. Therefore *R* must make the policy available to all three members of the family, and cannot impose any preexisting condition exclusions.

(g) *Clarification of applicability.* (1) An issuer in the individual market is not required to offer a family coverage option with any policy form.

(2) An issuer offering health insurance coverage only in connection with group health plans, or only through one or more bona fide associations, or both, is not required to offer that type of coverage in the individual market.

(3) An issuer offering health insurance coverage in connection with a group health plan is not deemed to be a health insurance issuer offering individual health insurance coverage solely because the issuer offers a conversion policy.

(4) This section does not restrict the amount of the premium rates that an issuer may charge an individual under State law for health insurance coverage provided in the individual market.

(5) This section does not prevent an issuer offering health insurance coverage in the individual market from establishing premium discounts or rebates, or modifying otherwise applicable copayments or deductibles, in return for adherence to programs of health promotion and disease prevention.

(6) This section does not require issuers to reopen blocks of business closed under applicable State law.

§ 148.122 Guaranteed renewability of individual health insurance coverage.

(a) *Applicability.* This section applies to all health insurance coverage in the individual market.

(b) *General rules.* (1) Except as provided in paragraph (c) of this section, an issuer must renew or continue in force the coverage at the option of the individual.

(2) Medicare eligibility or entitlement is not a basis for nonrenewal or termination of an individual's health insurance coverage in the individual market.

(c) *Exceptions to renewing coverage.* An issuer may nonrenew or discontinue health insurance coverage of an individual in the individual market based only on one or more of the following:

(1) *Nonpayment of premiums.* The individual has failed to pay premiums or contributions in accordance with the terms of health insurance coverage, including any timeliness requirements.

(2) *Fraud.* The individual has performed an act or practice that constitutes fraud or made an intentional misrepresentation of material fact under the terms of the coverage.

(3) *Termination of plan.* The issuer is ceasing to offer coverage in the individual market in accordance with paragraphs (d) and (e) of this section and applicable State law.

(4) *Movement outside the service area.* For network plans, the individual no longer resides, lives, or works in the service area of the issuer, or area for which the issuer is authorized to do business, but only if coverage is terminated uniformly without regard to any health status-related factor of covered individuals.

(5) *Association membership ceases.* For coverage made available in the individual market only through one or more bona fide associations, the individual's membership in the association ceases, but only if the coverage is terminated uniformly without regard to any health status-related factor of covered individuals.

(d) *Discontinuing a particular type of coverage.* An issuer may discontinue offering a particular type of health insurance coverage offered in the individual market only if it meets the following requirements:

(1) Provides notice in writing to each individual provided coverage of that type of health insurance at least 90 days before the date the coverage will be discontinued.

(2) Offers to each covered individual, on a guaranteed issue basis, the option to purchase any other individual health insurance coverage currently being offered by the issuer for individuals in that market.

(3) Acts uniformly without regard to any health status-related factor of covered individuals or dependents of covered individuals who may become eligible for coverage.

(e) *Discontinuing all coverage.* An issuer may discontinue offering all health insurance coverage in the individual market in a State only if it meets the following requirements.

(1) Provides notice in writing to the applicable State authority and to each individual of the discontinuation at least 180 days before the date the coverage will expire.

(2) Discontinues and does not renew all health insurance policies it issues or delivers for insurance in the State in the individual market.

(3) Acts uniformly without regard to any health status-related factor of covered individuals or dependents of covered individuals who may become eligible for coverage.

(f) *Prohibition on market reentry.* An issuer who elects to discontinue offering all health insurance coverage under paragraph (e) of this section may not issue coverage in the market and State involved during the 5-year period beginning on the date of discontinuation of the last coverage not renewed.

(g) *Exception for uniform modification of coverage.* An issuer may, only at the time of coverage renewal, modify the health insurance coverage for a policy form offered in the individual market if the modification is consistent with State law and is effective uniformly for all individuals with that policy form.

(h) *Application to coverage offered only through associations.* In the case of health insurance coverage that is made available by a health insurance issuer in the individual market only through one or more associations, any reference in this section to an ''individual'' is deemed to include a reference to the association of which the individual is a member.

§ 148.124 Certification and disclosure of coverage.

(a) *Applicability*—(1) *General rule.* Except as provided in paragraph (a)(2) of this section, this section applies to all issuers of health insurance coverage.

(2) *Exception.* The provisions of this section do not apply to issuers of the following types of coverage:

(i) Health insurance coverage furnished in connection with a group health plan defined in 45 CFR 144.103. (These issuers are regulated under 45 CFR 146.115 to provide a certificate of coverage.)

(ii) Excepted benefits described in § 148.220.

(b) *General rules*—(1) *Individuals for whom a certificate must be provided; timing of issuance.* A certificate must be provided, without charge, for individuals and dependents, who are or were covered under an individual health insurance policy for the following:

(i) *Issuance of automatic certificates.* An automatic certificate must be provided within a reasonable time period consistent with State law after the individual ceases to be covered under the policy.

(ii) *Any individual upon request.* A request for a certificate may be made by, or on behalf of, an individual within 24 months after coverage ends. For example, an entity that provides coverage to an individual in the future may, if authorized by the individual, request a certificate of the individual's creditable coverage on behalf of the individual from the issuer of the individual's prior coverage. After the request is received, an issuer must provide the certificate promptly. A certificate must be provided under this paragraph even if the individual has previously received an automatic certificate under paragraph (a)(l)(i) of this section.

(2) *Form and content of certificate*—(i) *Written certificate*—(A) *General rule.* Except as provided in paragraph (b)(2)(i)(B) of this section, the issuer must provide the certificate in writing (including any form approved by the HCFA) (B) *Other permissible forms.* No written certificate must be provided if the following occurs:

(*1*) An individual is entitled to receive a certificate.

(*2*) The individual requests that the certificate be sent to another plan or issuer instead of to the individual.

(*3*) The plan or issuer that would otherwise receive the certificate agrees to accept the information in paragraph (a)(3) of this section through means other than a written certificate (for example, by telephone).

(*4*) The receiving plan or issuer receives the information from the sending issuer in the prescribed form within the time periods required under paragraph (b)(1) of this section.

(ii) *Required information.* The certificate must include the following:

(A) The date the certificate is issued.

(B) The name of the individual or dependent for whom the certificate applies, and any other information necessary for the issuer providing the coverage specified in the certificate to identify the individual, such as the individual's identification number under the policy and the name of the policyholder if the certificate is for (or includes) a dependent.

(C) The name, address, and telephone number of the issuer required to provide the certificate.

(D) The telephone number to call for further information regarding the certificate (if different from paragraph (b)(2)(ii)(C) of this section).

(E) Either one of the following:

(*1*) A statement that the individual has at least 18 months (for this purpose, 546 days is deemed to be 18 months) of creditable coverage, disregarding days of creditable coverage before a significant break in coverage as defined in 45 CFR 146.113(b)(2)(iii).

(*2*) Both the date the individual first sought coverage, as evidenced by a substantially complete application, and the date creditable coverage began.

(F) The date creditable coverage ended, unless the certificate indicates that creditable coverage is continuing as of the date of the certificate.

(iii) *Periods of coverage under a certificate.* If any automatic certificate is provided under paragraph (b)(1)(i) of this section, the period that must be included on the certificate is the last period of continuous coverage ending on the date coverage ceased. If an individual requests a certificate under paragraph (b)(1)(ii) of this section, a certificate must be provided for each period of continuous coverage ending within the 24-month period ending on the date of the request (or continuing on the date of the request). A separate certificate may be provided for each period of continuous coverage.

(iv) *Single certificate permitted for families.* An issuer may provide a single certificate for both an individual and the individual's dependents if it provides all the required information for each individual and dependent, and separately states the information that is not identical.

(v) *Model certificate.* The requirements of paragraph (b)(2)(ii) of this section are satisfied if the issuer provides a certificate in accordance with a model certificate as provided by HCFA.

(vi) *Excepted benefits; categories of benefits.* No certificate is required to be furnished with respect to excepted benefits described in § 148.220. If excepted benefits are provided concurrently with other creditable coverage (so that the coverage does not consist solely of excepted benefits), information concerning the benefits may be required to be disclosed under paragraph (c) of this section.

(3) *Procedures*—(i) *Method of delivery.* The certificate is required to be provided, without charge, to each individual described in paragraph (b)(1) of this section or an entity requesting the certificate on behalf of the individual. The certificate may be provided by first-class mail. If the certificate or certificates are provided to the individual and the individual's spouse at the individual's last known address, the requirements of this paragraph (b)(3) are satisfied with respect to all individuals and dependents residing at that address. If a dependent does not reside at the individual's last known address, a separate certificate must be provided to the dependent at the dependent's last known address. If separate certificates are provided by mail to individuals and dependents who reside at the same address, separate mailings of each certificate are not required.

(ii) *Procedure for requesting certificates.* An issuer must establish a procedure for individuals and dependents to request and receive certificates under paragraph (b)(1)(ii) of this section.

(iii) *Designated recipients.* If an automatic certificate is required to be provided under paragraph (b)(1)(i) of this section, and the individual or dependent entitled to receive the certificate designates another individual or entity to receive the certificate, the issuer responsible for providing the certificate may provide the certificate to the designated party. If a certificate must be provided upon request under paragraph (b)(1)(ii) of this section, and the individual entitled to receive the certificate designates another individual or entity to receive the certificate, the issuer responsible for providing the certificates must provide the certificate to the designated party.

(4) *Special rules concerning dependent coverage*—(i) *Reasonable efforts.* An issuer must use reasonable efforts to determine any information needed for a certificate relating to dependent coverage. If an automatic certificate must be furnished with respect to a dependent under paragraph (b)(1)(i) of this section, no individual certificate must be furnished until the issuer knows (or making reasonable efforts should know) of the dependent's cessation of coverage under the policy.

(ii) *Special rules for demonstrating coverage.* If a certificate furnished by an issuer does not provide the name of any dependent of an individual covered by the certificate, the individual may, if necessary, use the procedures described in paragraph (d)(3) of this section for demonstrating dependent status. An individual may, if necessary, use these procedures to demonstrate that a child was enrolled within 30 days of birth, adoption, or placement for adoption, in which case the child would not be subject to a preexisting condition exclusion under § 148.120(f)(2).

(iii) *Transition rule for dependent coverage before July 1, 1998*—(A) *General rule.* An issuer that cannot provide the names of dependents (or related coverage information) for purposes of providing a certificate of coverage for a dependent may satisfy the requirements of paragraph (b)(2)(ii)(C) of this section by providing the name of the policyholder and specifying that the type of coverage provided in the certificate is for dependent coverage (for example, family coverage or individual-plus-spouse coverage).

(B) *Certificates provided on request.* For purposes of certificates provided on the request of, or on behalf of, an individual under paragraph (b)(1)(ii) of this section, an issuer must make reasonable efforts to obtain and provide the names of any dependent covered by the certificate if the information is requested. If an issuer responsible for providing a certificate does not provide the name of any dependent of an individual covered by the certificate, the individual may, if necessary, use the procedures described in paragraph (d)(3) of this section for submitting documentation to establish that the creditable coverage in the certificate applies to the dependent.

(C) *Timing.* An issuer providing an automatic certificate that does not contain the name of a dependent must furnish a certificate within 21 days after the individual ceases to be covered under the policy.

(D) *Duration.* The transitional rules of this paragraph (b)(4)(iii) are effective for certifications provided with respect to an event occurring before July 1, 1998.

(E) *Optional notice.* This paragraph applies to events described in § 148.124 (b)(4)(ii), that occur on or after October 1, 1996, but before June 1, 1997. An issuer offering individual health insurance coverage is deemed to satisfy § 148.124 (b)(1) and (b)(2) if a notice is

provided in accordance with the provisions of § 148.124(b)(4)(iii).

(c) *Disclosure of coverage to a plan, or issuer, electing the alternative method of creating coverage*—(1) *General rule.* If an individual enrolls in a group health plan and the plan or issuer uses the alternative method of determining creditable coverage described in 45 CFR 146.113(c), the individual provides a certificate of coverage under paragraph (b) of this section or demonstrates creditable coverage under paragraph (d) of this section, and the plan or coverage in which the individual enrolls requests from the prior entity, the prior entity must disclose promptly to the requesting plan or issuer (''requesting entity'') the information set forth in paragraph (c)(2) of this section.

(2) *Information to be disclosed.* The prior entity must promptly identify for the requesting entity the categories of benefits and services used by the individual for which the requesting entity uses the alternative method of crediting coverage, and any specific information that the requesting entity requests to determine the individual's creditable coverage. The prior entity must promptly disclose to the requesting entity the creditable coverage information.

(3) *Charge for providing information.* The prior entity furnishing the information under paragraph (c)(2) of this section may charge the requesting entity for the reasonable cost of disclosing the information.

(d) *Ability of an individual to demonstrate creditable coverage and waiting period information*—(1) *General rule.* Individuals may establish creditable coverage through means other than certificates. If the accuracy of a certificate is contested or a certificate is unavailable when needed by the individual, the individual has the right to demonstrate creditable coverage (and waiting or affiliation periods) through the presentation of documents or other means. For example, the individual may make a demonstration if one of the following occurs:

(i) An entity has failed to provide a certificate within the required time period.

(ii) The individual has creditable coverage but an entity may not be required to provide a certificate of the coverage.

(iii) The coverage is for a period before July 1, 1996.

(iv) The individual has an urgent medical condition that necessitates a determination before the individual can deliver a certificate to the plan.

(v) The individual lost a certificate that the individual had previously received and is unable to obtain another certificate.

(2) *Evidence of creditable coverage*—(i) *Consideration of evidence.* An issuer must take into account all information that it obtains or that is presented on behalf of an individual to make a determination, based on the relevant facts and circumstances, whether or not an individual has 18 months of creditable coverage. An issuer must treat the individual as having furnished a certificate if the individual attests to the period of creditable coverage, the individual presents relevant corroborating evidence of some creditable coverage during the period, and the individual cooperates with the issuer's efforts to verify the individual's coverage. For this purpose, cooperation includes providing (upon the issuer's request) a written authorization for the issuer to request a certificate on behalf of the individual, and cooperating in efforts to determine the validity of the corroborating evidence and the dates of creditable coverage. While an issuer may refuse to credit coverage if the individual fails to cooperate with the issuer's efforts to verify coverage, the issuer may not consider an individual's inability to obtain a certificate to be evidence of the absence of creditable coverage.

(ii) *Documents.* Documents that may establish creditable coverage (and waiting periods or affiliation periods) in the absence of a certificate include explanations of benefit claims (EOB) or other correspondence from a plan or issuer indicating coverage, pay stubs showing a payroll deduction for health coverage, a health insurance identification card, a certificate of coverage under a group health policy, records from medical care providers indicating health coverage, third party statements verifying periods of coverage, and any other relevant documents that evidence periods of health coverage.

(iii) *Other evidence.* Creditable coverage (and waiting period or affiliation period information) may be established through means other than documentation, such as by a telephone call from the issuer to a third party verifying creditable coverage.

(3) *Demonstrating dependent status.* If, in the course of providing evidence (including a certificate) of creditable coverage, an individual is required to demonstrate dependent status, the issuer must treat the individual as having furnished a certificate showing the dependent status if the individual attests to the dependency and the period of the status and the individual cooperates with the issuer's efforts to verify the dependent status.

§ 148.126 Determination of an eligible individual.

(a) *General rule.* Each issuer offering health insurance coverage in the individual market is responsible for determining whether an applicant for coverage is an eligible individual as defined in § 148.103.

(b) *Specific requirements.* (1) The issuer must exercise reasonable diligence in making this determination.

(2) The issuer must promptly determine whether an applicant is an eligible individual.

(3) If an issuer determines that an individual is an eligible individual, the issuer must promptly issue a policy to that individual.

(c) *Insufficient information*—(1) *General rule.* If the information presented in or with an application is substantially insufficient for the issuer to make the determination described in paragraph (b)(2) of this section, the issuer may immediately request additional information from the individual, and must act promptly to make its determination after receipt of the requested information

(2) *Failure to provide a certification of creditable coverage.* If an entity fails to provide the certificate that is required under this part or 45 CFR part 146 to the applicant, the issuer is subject to the procedures set forth in § 148.124(d)(1) concerning an individual's right to demonstrate creditable coverage.

§ 148.128 State flexibility in individual market reforms—alternative mechanisms.

(a) *Waiver of requirements.* The requirements of § 148.120, which set forth Federal requirements for guaranteed availability in the individual market, do not apply in a State that implements an acceptable alternative mechanism in accordance with the following criteria:

(1) The alternative mechanism meets the following conditions:

(i) Offers health insurance coverage to all eligible individuals.

(ii) Prohibits imposing preexisting condition exclusions and affiliation periods for coverage of an eligible individual.

(iii) Offers an eligible individual a choice of coverage that includes at least one policy form of coverage that is comparable to either one of the following:

(A) Comprehensive coverage offered in the individual market in the State.

(B) A standard option of coverage available under the group or individual health insurance laws of the State.

(2) The State is implementing one of the following provisions relating to risk:

(i) One of the following model acts, as adopted by the NAIC on June 3, 1996, but only if the model has been revised in State regulations to meet all of the requirements of this part and part 144:

(A) The Small Employer and Individual Health Insurance Availability Model Act to the extent it applies to individual health insurance coverage.

(B) The Individual Health Insurance Portability Model Act.

(ii) A qualified high risk pool, which, for purposes of this section, is a high risk pool that meets the following conditions:

(A) Provides to all eligible individuals health insurance coverage (or comparable coverage) that does not impose any preexisting condition exclusion or affiliation periods for coverage of an eligible individual.

(B) Provides for premium rates and covered benefits for the coverage consistent with standards included in the NAIC Model Health Plan for Uninsurable Individuals Act (as in effect as of August 21, 1996), but only if the model has been revised in State regulations to meet all of the requirements of this part and part 144.

(iii) One of the following mechanisms:

(A) Any other mechanism that provides for risk adjustment, risk spreading, or a risk-spreading mechanism (among issuers or policies of an issuer) or otherwise provides for some financial subsidization for eligible individuals, including through assistance to participating issuers.

(B) A mechanism that provides a choice for each eligible individual of all individual health insurance coverage otherwise available.

(b) *Permissible forms of mechanisms.* A private or public individual health insurance mechanism (such as a health insurance coverage pool or program, a mandatory group conversion policy, guaranteed issue of one or more plans of individual health insurance coverage, or open enrollment by one or more health insurance issuers), or combination of these mechanisms, that is designed to provide access to health benefits for individuals in the individual market in the State, in accordance with this section, may constitute an acceptable alternative mechanism.

(c) *Establishing an acceptable alternative mechanism—transition rules.* HCFA presumes a State to be implementing an acceptable alternative mechanism as of July 1, 1997 if the following conditions are met:

(1) By not later than April 1, 1997, as evidenced by a postmark date, or other such date, the chief executive officer of the State takes the following actions:

(i) Notifies HCFA that the State has enacted or intends to enact by not later than January 1, 1998 (unless it is a State described in paragraph (d) of this section), any legislation necessary to provide for the implementation of a mechanism reasonably designed to be an acceptable alternative mechanism as of January 1, 1998.

(ii) Provides HCFA with the information necessary to review the mechanism and its implementation (or proposed implementation).

(2) HCFA has not made a determination, in accordance with the procedure in paragraph (e)(4)(1) of this section, that the State will not be implementing a mechanism reasonably designed to be an acceptable alternative mechanism as of January 1, 1998.

(d) *Delay permitted for certain States.* If a State notifies HCFA that its legislature is not meeting in a regular session between August 21, 1996 and August 20, 1997, HCFA continues to presume until July 1, 1998 that the State is implementing an acceptable alternative mechanism, if the chief executive officer of the State takes the following actions:

(1) Notifies HCFA by April 1, 1997, that the State intends to submit an alternative mechanism and intends to enact any necessary legislation to provide for the implementation of an acceptable alternative mechanism as of July 1, 1998.

(2) Notifies HCFA by April 1, 1998, that the State has enacted any necessary legislation to provide for the implementation of an acceptable alternative mechanism as of July 1, 1998.

(3) Provides HCFA with the information necessary to review the mechanism and its implementation (or proposed implementation).

(e) *Submitting an alternative mechanism after April 1, 1997*—(1) *Notice with information.* A State that wishes to implement an acceptable alternative mechanism must take the following actions:

(i) Notify HCFA that it has enacted legislation necessary to provide for the implementation of a mechanism reasonably designed to be an acceptable alternative mechanism, and

(ii) Provide HCFA with the information necessary for HCFA to review the mechanism and its implementation (or proposed implementation).

(2) If the State takes the actions described in paragraph (e)(1) of this section, the mechanism is considered to be an acceptable alternative mechanism unless HCFA makes a preliminary determination (under paragraph (e)(4)(i) of this section), within the review period (defined in paragraph (e)(3) of this section), that the mechanism is not an acceptable alternative mechanism.

(3) *Review period*—(1) *General.* The review period begins on the date the State's notice and information are received by HCFA, and ends 90 days later, not counting any days during which the review period is suspended under paragraph (e)(3)(ii) of this section.

(ii) *Suspension of review period.* During any review period, if HCFA notifies the State of the need for additional information or further discussion on its submission, HCFA suspends the review period until the State provides the necessary information.

(4) *Determination by HCFA*—(i) *Preliminary determination.* If HCFA finds after reviewing the submitted information, and after consultation with the chief executive officer of the State and the chief insurance regulatory official of the State, that the mechanism is not an acceptable alternative mechanism, HCFA takes the following actions:

(A) Notifies the State, in writing, of the preliminary determination.

(B) Informs the State that if it fails to implement an acceptable alternative mechanism, the Federal guaranteed availability provisions of § 148.120 will take effect.

(C) Permits the State a reasonable opportunity to modify the mechanism (or to adopt another mechanism).

(ii) *Final determination.* If, after providing notice and a reasonable opportunity for the State to modify its mechanism, HCFA makes a final determination that the design of the State's alternative mechanism is not acceptable or that the State is not substantially enforcing an acceptable alternative mechanism, HCFA notifies the State in writing of the following:

(A) HCFA's final determination.

(B) That the requirements of § 148.120 concerning guaranteed availability apply to health insurance coverage offered in the individual market in the State are effective as of a date specified in the notice from HCFA.

(iii) *State request for early notice.* A State may request that HCFA notify the State before the end of the review period if HCFA is not making a preliminary determination.

(5) *Effective date.* If HCFA does not make a preliminary determination within the review period, the acceptable alternative mechanism is effective 90 days after the end of the 90-day review

period described in paragraph (e)(3)(i) of this section.

(f) *Continued application.* A State alternative mechanism may continue to be presumed to be acceptable, if the State provides information to HCFA that meets the following requirements:

(1) If the State makes a significant change to its alternative mechanism, it provides the information before making a change.

(2) Every 3 years from the later of implementing the alternative mechanism or implementing a significant change, it provides HCFA with information.

(g) *Review criteria.* HCFA reviews each State's submission to determine whether it addresses all of the following requirements:

(1) Is the mechanism reasonably designed to provide all eligible individuals with a choice of health insurance coverage?

(2) Does the choice offered to eligible individuals include at least one policy form that meets one of the following requirements?

(i) Is the policy form comparable to comprehensive health insurance coverage offered in the individual market in the State?

(ii) Is the policy form comparable to a standard option of coverage available under the group or individual health insurance laws of the State?

(3) Does the mechanism prohibit preexisting condition exclusions for all eligible individuals?

(4) Is the State implementing one of the following:

(i) The NAIC Small Employer and Individual Health Insurance Availability Model Act (Availability Model), adopted on June 3, 1996, revised to reflect HIPAA requirements.

(ii) The Individual Health Insurance Portability Model Act (Portability Model), adopted on June 3, 1996, revised to reflect HIPAA requirements.

(iii) A qualified high-risk pool that provides eligible individuals health insurance or comparable coverage without a preexisting condition exclusion, and with premiums and benefits consistent with the NAIC Model Health Plan for Uninsurable Individuals Act (as in effect August 21, 1996), revised to reflect HIPAA requirements.

(iv) A mechanism that provides for risk spreading or provides eligible individuals with a choice of all available individual health insurance coverage.

(5) Has the State enacted all legislation necessary for implementing the alternative mechanism?

(6) If the State has not enacted all legislation necessary for implementing the alternative mechanism, will the necessary legislation be enacted by January 1, 1998?

(h) *Limitation of HCFA's authority.* HCFA does not make a preliminary or final determination on any basis other than a mechanism is not considered an acceptable alternative mechanism or is not being implemented.

Subpart C—[Reserved]

Subpart D—Enforcement; Penalties; Preemption

§ 148.200 Enforcement by State; determination regarding failure to enforce.

(a) *General rule—enforcement by State.* Except as provided in paragraph (b) of this section, each State enforces the requirements of this part with respect to health insurance issuers that issue, sell, renew, or offer health insurance coverage in the individual market in the State.

(b) *Exception—enforcement by HCFA.* HCFA enforces the provisions of this part with respect to health insurance issuers, using the procedures described in § 148.202, only in the following circumstances:

(1) *State election.* The State chooses not to enforce the Federal requirements.

(2) *State failure to enforce.* HCFA determines under paragraph (c) of this section that a State has failed to substantially enforce the requirements of this part.

(c) *HCFA determination.* If HCFA receives information, through a complaint or any other means, that raises a question about whether a State is substantially enforcing the requirements of this part, HCFA follows the following procedures:

(1) *Verification of exhaustion.* HCFA makes a threshold determination of whether the individuals affected by the alleged failure to enforce have made a reasonable effort to exhaust any State remedies. This may involve informal contact with State officials about the questions raised.

(2) *Notice to the State.* If HCFA is satisfied that there is a reasonable question about whether there has been a failure to substantially enforce the requirements of this part, HCFA sends, in writing, the notice described in paragraph (c)(3) of this section, to the following State officials:

(i) The Governor or chief executive officer of the State.

(ii) The insurance commissioner or chief insurance regulatory official.

(iii) If the alleged failure involves HMOs, the official responsible for regulating HMOs, if different than the official listed in paragraph (c)(2)(ii) of this section.

(3) *Form and content of notice.* HCFA's written notice to the State sets forth the following information:

(i) Describes the facts of the specific violations.

(ii) Explains that the consequence of a failure to substantially enforce the requirements of this part is that HCFA enforces the requirements in accordance with paragraph (d) of this section.

(iii) Advises the State that it has 45 days to respond to the notice, unless the time is extended as described in paragraph (c)(4) of this section, and that the response should include any information that the State wishes HCFA to consider in making the preliminary determination described in paragraph (c)(5) of this section.

(4) *Extension.* HCFA may, for good cause, grant the State an extension of the time period described in paragraph (c)(3)(iii) of this section. Examples of good cause include an agreement between HCFA and the State that there should be a public hearing on the State's enforcement, or evidence that the State is undertaking expedited enforcement activities.

(5) *Preliminary determination.* If, at the end of the 45-day period for a State to respond to HCFA's notice (and any extension), the State has not established to HCFA's satisfaction that it is substantially enforcing the requirements of this part, HCFA takes the following actions:

(i) Consults with the officials described in paragraph (c)(1) of this section.

(ii) Notifies the State of HCFA's preliminary determination that the State has failed to enforce the requirements, and that the failure is continuing.

(iii) Permits the State a reasonable opportunity to show evidence of substantial enforcement.

(6) *Final determination.* If, after providing notice and the opportunity to enforce the requirements of this part, HCFA finds that the failure to enforce has not been corrected, HCFA sends the State a written notice of that final determination. The notice sets forth the following:

(i) The effective date of HCFA enforcement.

(ii) The mechanism for establishing in the future that it has corrected the failure, and has begun enforcement. This mechanism includes transition procedures for ending HCFA's enforcement period.

§ 148.202 Civil money penalties.

(a) *General rule.* If any health insurance issuer that is subject to HCFA's enforcement authority under § 148.200 fails to comply with any

applicable requirement of this part, it may be subject to a civil money penalty.

(b) *Complaint.* Any person who is entitled to any right under this part, and who believes that the right is being denied as a result of an issuer's failure to comply with the requirements of this part may file a complaint with HCFA.

(c) *Notice to issuer.* HCFA sends a written notice to the issuer that a complaint or other information has been received alleging a violation of this part. The notice sets forth the following:

(1) A description of the substance of any complaint or other allegation.

(2) A time frame of 30 days for the issuer to respond with additional information, which can include the following:

(i) Information refuting that there has been a violation.

(ii) Evidence that the issuer did not know, and exercising reasonable diligence could not have known, of the violation.

(iii) Evidence of a previous record of compliance.

(d) *Notice of assessment.* If, based on the information provided in the complaint, as well as any information submitted by the issuer or any other parties, HCFA proposes to assess a civil money penalty, HCFA sends written notice of the assessment to the issuer by certified mail, return receipt requested. The notice contains the following information:

(1) The name or names of the individuals with respect to whom a violation occurred, with relevant identification numbers.

(2) The facts that support the finding of a violation, and the initial date of the violation.

(3) The amount of the proposed penalty as of the date of the notice.

(4) The basis for calculating the penalty, including consideration of prior compliance.

(5) Instructions for responding to the notice, including the following information:

(i) A specific statement of the issuer's right to a hearing.

(ii) A statement that failure to request a hearing within 30 days permits the imposition of the proposed penalty, without right of appeal.

(e) *Amount of penalty*—(1) *Maximum daily penalty*. The penalty cannot exceed $100 for each day, for each individual with respect to whom a failure occurs.

(2) *Standard for calculating daily penalty*. In calculating the amount of the penalty, HCFA takes into account the issuer's previous record of compliance and the seriousness of the violation.

(3) *Limitations on penalties*. No civil money penalty is imposed for the following periods:

(i) A period during which a failure existed, but the issuer did not know, and exercising reasonable diligence would not have known, that the failure existed.

(ii) A period occurring immediately after the period during which a failure existed, but the issuer did not know, and exercising reasonable diligence would not have known, that the failure existed if the failure—

(A) Was due to reasonable cause and was not due to willful neglect; and

(B) Was corrected within 30 days of the first day that the issuer knew, or exercising reasonable diligence would have known, that the failure existed.

(iii) The burden is on the issuer to establish to the satisfaction of HCFA that it did not know, and exercising reasonable diligence could not have known that the failure existed.

(f) *Hearings*—(1) *Right to a hearing.* Any issuer against which a penalty is assessed may request a hearing by HCFA. The request must be in writing, and must be postmarked within 30 days after the date HCFA issues the notice of assessment.

(2) *Failure to request a hearing.* If no hearing is requested in accordance with this paragraph (f), the notice of assessment constitutes a final order that is not subject to appeal.

(3) *Parties to the hearing.* Parties to the hearing include the issuer and the party who filed the complaint. HCFA sends an informational notice to the State.

(4) *Initial agency decision*. The initial agency decision is made by an administrative law judge. The decision is made on the record under section 554 of Title 5, United States Code. The decision becomes a final and appealable order after 30 days, unless it is modified in accordance with paragraph (g) of this section.

(5) *Review by HCFA*. HCFA may modify or vacate the initial agency decision. Notice of intent to modify or vacate the decision is issued to the parties within 30 days after the date of the decision by the administrative law judge.

(g) *Judicial review*—(1) *Filing of action for review*. Any issuer against whom a final order imposing a civil money penalty is entered may obtain review in the United States District Court for any district in which the entity is located or the United States District Court for the District of Columbia by—

(i) Filing a notice of appeal in that court within 30 days from the date of a final order; and

(ii) Simultaneously sending a copy of the notice of appeal by registered mail to HCFA.

(2) *Certification of administrative record*. HCFA promptly certifies and files with the court the record upon which the penalty was imposed.

(3) *Standard of review*. The findings of HCFA may not be set aside unless they are found to be unsupported by substantial evidence, as provided by section 706(2)(E) of Title 5, United States Code.

(4) *Appeal*. Any final decision, order, or judgment of the district court concerning HCFA's review is subject to appeal as provided in Chapter 83 of Title 28, United States Code.

(h) *Failure to pay assessment, maintenance of action*—(1) *Failure to pay assessment*. If an issuer fails to pay an assessment after it becomes a final order, or after the court has entered final judgment in favor of HCFA, HCFA refers the matter to the Attorney General, who brings an action against the issuer in the appropriate United States district court to recover the amount assessed.

(2) *Final order not subject to review*. In an action brought under paragraph (h)(1) of this section, the validity and appropriateness of the final order described in paragraph (g)(1)(i) of paragraph (g)(3) of this section is not subject to review.

(i) *Use of penalty funds*. (1) Any funds collected under this section are paid to the Administrator or other office imposing the penalty.

(2) The funds are available without appropriation and until expended.

(3) The funds may only be used for the purpose of enforcing the provisions for which the penalty was imposed.

§ 148.210 Preemption.

(a) *Scope*. (1) This section describes the effect of sections 2741 through 2763 and 2791 of the PHS Act on a State's authority to regulate health insurance issuers in the individual market. This section makes clear that States remain subject to section 514 of ERISA, which generally preempts State law that relates to ERISA-covered plans.

(2) Sections 2741 through 2763 and 2791 of the PHS Act cannot be construed to affect or modify the provisions of section 514 of ERISA.

(b) *Regulation of insurance issuers*. The individual market rules of this part do not prevent a State law from establishing, implementing, or continuing in effect standards or requirements unless the standards or requirements prevent the application of a requirement of this part.

§ 148.220 Excepted benefits.

The requirements of this part do not apply to individual health insurance coverage in relation to its provision of the benefits described in paragraphs (a) and (b) of this section (or any combination of the benefits).

(a) *Benefits excepted in all circumstances.* The following benefits are excepted in all circumstances:

(1) Coverage only for accident (including accidental death and dismemberment).

(2) Disability income insurance.

(3) Liability insurance, including general liability insurance and automobile liability insurance.

(4) Coverage issued as a supplement to liability insurance.

(5) Workers' compensation or similar insurance.

(6) Automobile medical payment insurance.

(7) Credit-only insurance (for example, mortgage insurance).

(8) Coverage for on-site medical clinics.

(b) *Other excepted benefits.* The requirements of this part do not apply to individual health insurance coverage described in paragraph (b)(1) through (b)(6) of this section if the benefits are provided under a separate policy, certificate, or contract of insurance. These benefits include the following:

(1) Limited scope dental or vision benefits. These benefits are dental or vision benefits that are limited in scope to a narrow range or type of benefits that are generally excluded from benefit packages that combine hospital, medical, and surgical benefits.

(2) Long-term care benefits. These benefits are benefits that are either—

(i) Subject to State long-term care insurance laws;

(ii) For qualified long-term care insurance services, as defined in section 7702B(c)(1) of the Code, or provided under a qualified long-term care insurance contract, as defined in section 7702B(b) of the Code; or

(iii) Based on cognitive impairment or a loss of functional capacity that is expected to be chronic.

(3) Coverage only for a specified disease or illness (for example, cancer policies), or hospital indemnity or other fixed indemnity insurance (for example, $100/day) if the policies meet the requirements of 45 CFR 146.145(b)(4)(ii)(B) and (b)(4)(ii)(C) regarding noncoordination of benefits.

(4) Medicare supplemental health insurance (as defined under section 1882(g)(1) of the Social Security Act. 42 U.S.C. 1395ss, also known as Medigap or MedSup insurance).

(5) Coverage supplemental to the coverage provided under Chapter 55, Title 10 of the United States Code (also known as CHAMPUS supplemental programs).

(6) Similar supplemental coverage provided to coverage under a group health plan.

Authority: Secs. 2741 through 2763, 2791, and 2792 of the PHS Act, 42 U.S.C. 300gg–41 through 300gg–63, 300gg–91, and 300gg–91.

Dated: March 25, 1997.

Bruce C. Vladeck,

Administrator, Health Care Financing Administration.

Dated: March 25, 1997.

Donna E. Shalala,

Secretary.

[FR Doc. 97–8217 Filed 4–1–97; 12:58 pm]

BILLING CODE 4120–01–M

DEPARTMENT OF THE TREASURY

Internal Revenue Service

26 CFR Part 54

[TD 8716]

RIN 1545–AV05

DEPARTMENT OF LABOR

Pension and Welfare Benefits Administration

29 CFR Part 2590

RIN 1210–AA54

Interim Rules for Health Insurance Portability for Group Health Plans

AGENCIES: Internal Revenue Service, Department of the Treasury; Pension and Welfare Benefits Administration, Department of Labor.

ACTION: Interim rules: Correction.

SUMMARY: This document contains a correction regarding the preamble to the interim rules governing access, portability and renewability requirements for group health plans and issuers of health insurance coverage offered in connection with a group health plan that were published elsewhere in this issue of the **Federal Register**. A sentence in the preamble to the interim rules was inadvertently dropped. This document adds this sentence.

EFFECTIVE DATE: June 1, 1997.

FOR FURTHER INFORMATION CONTACT: Mark Connor, Office of Regulations and Interpretations, Pension and Welfare Benefits Administration, Department of Labor, at 202–219–4377; Diane Pedulla, Plan Benefits Security Division, Office of the Solicitor, Department of Labor, at 202–219–4377; or Russ Weinheimer, Internal Revenue Service, at 202–622–4695. These are not toll-free numbers.

SUPPLEMENTARY INFORMATION: The last sentence of the first paragraph of the preamble to the interim rules entitled section ''M. Paperwork Reduction Act—Department of Labor and Department of the Treasury'' is inadvertently missing. This document adds this sentence to the preamble to the interim rules. The sentence reads ''An agency may not conduct or sponsor, and a person is not required to respond to, a collection of information unless it displays a valid control number assigned by the Office of Management and Budget''.

Signed at Washington, DC, this 3rd day of April, 1997.

Olena Berg,

Assistant Secretary, Pension and Welfare Benefits Administration, U.S. Department of Labor.

Dale D. Goode,

Federal Register Liaison, Assistant Chief Counsel (Corporate), U.S. Department of the Treasury.

[FR Doc. 97–8933 Filed 4–3–97; 12:49 pm]

BILLING CODE 4830–01–P, 4510–29–P

DEPARTMENT OF HEALTH AND HUMAN SERVICES

Health Care Financing Administration

45 CFR Subtitle A

[BPD–882–CN]
[BPD–890–CN]

Interim Rules for Health Insurance Portability for Group Health Plans and Individual Market Health Insurance Reform: Portability from Group to Individual Coverage; and Federal Rules for Access in the Individual Market; State Alternative Mechanisms to Federal Rules

AGENCY: Health Care Financing Administration (HCFA), HHS.

ACTION: Interim rule; correction.

SUMMARY: **Federal Register** documents 97–8217 and 97–8275 in this issue include provisions that implement the health insurance portability, availability, and renewability provisions of the Health Insurance Portability and Accountability Act of 1996.

Those documents contain a technical error in amendments because of differing effective dates. The rule with the earlier effective date establishes a new part in a subchapter established by the rule with the later date. This document corrects that error.

EFFECTIVE DATE: This correction is effective on April 8, 1997.

FOR FURTHER INFORMATION CONTACT: Michelle Bruggy, (410) 786–4672.

SUPPLEMENTARY INFORMATION: .

Correction

I. In document 97–8217, effective April 8, 1997:

a. Immediately following the List of Subjects, on the page in which the regulations text begins, immediately following the statement ''For the reasons set forth in the preamble, 45 CFR Subtitle A is amended as set forth below:'' the following is inserted:

''Department of Health and Human Services

45 CFR Subtitle A

45 CFR is amended as set forth below:

PART 45 [CORRECTED]

1. The heading for Subtitle A is revised to read as follows:

Subtitle A—Department of Health and Human Services

2. Existing parts 1 through 100 are designated as Subchapter A of Subtitle A and a new Subchapter heading is added to read as follows:

Subchapter A—General Administration

3. New Subchapter B, consisting of Parts 140 through 199, is added to read as follows:

Subchapter B—Requirements Relating to Health Care Access

PARTS 140—147 [RESERVED]''

b. On that same page, delete the amendatory language, ''A new Part 148, consisting of §§ 148.101 through 148.220, is added to Subchapter B to read as follows:''.

II. In document 97–8275, effective June 1, 1997:

a. Immediately following the Internal Revenue Service revisions to 26 CFR, on the page where the HHS regulations text begins, the following is deleted:

''45 CFR is amended as set forth below:

1. The heading for Subtitle A is revised to read as follows:

Subtitle A—Department of Health and Human Services

2. Existing parts 1 through 100 are designated as Subchapter A of Subtitle A and a new Subchapter heading is added to read as follows:

Subchapter A—General Administration

3. New Subchapter B, consisting of Parts 140 through 199, is added to read as follows:

Subchapter B—Requirements Relating to Health Care Access

PARTS 140—143 [RESERVED]''

b. Insert in its place the following:

''45 CFR is amended in Subchapter B, by adding Parts 144 and 146 as set forth below:''.

§ 148.128 [Corrected]

4. In § 148.128 (a)(2)(i) and (a)(2)(ii)(B), the phrase ''part 144'' is corrected to read ''title 27 of the PHS Act''.

Authority: Secs. 2701 through 2763, 2791, and 2792 of the PHS Act, 42 U.S.C. 300gg through 300gg–63, 300gg–91, and 300gg–92.

Dated: April 4, 1997.

Neil J. Stillman,

Deputy Assistant Secretary for Information Resources Management.

[FR Doc. 97–9124 Filed 4–4–97; 2:25 pm]

BILLING CODE 4120–01–M

federal register

Tuesday
April 8, 1997

Part III

Department of Transportation

Coast Guard

46 CFR Part 8

Streamlined Inspection Program; Proposed Rule

DEPARTMENT OF TRANSPORTATION

Coast Guard

46 CFR Part 8

[CGD 96–055]

RIN 2115–AF37

Streamlined Inspection Program

AGENCY: Coast Guard, DOT.

ACTION: Notice of proposed rulemaking.

SUMMARY: The Coast Guard proposes to establish an optional Streamlined Inspection Program (SIP) to provide owners and operators of U.S. documented or registered vessels an alternative method of complying with Coast Guard inspection requirements. Vessel owners or operators would have their own personnel periodically perform many of the tests and examinations conducted by Coast Guard marine inspectors. Vessel owners and operators opting to participate in the program would maintain a vessel in compliance with a Vessel Action Plan (VAP). The Coast Guard expects that participating vessels would continuously meet a higher level of safety and inspection readiness throughout the inspection cycle.

DATES: Comments must be received on or before July 7, 1997.

ADDRESSES: Mail comments to the Executive Secretary, Marine Safety Council (G–LRA/3406) [CGD 96–055], U.S. Coast Guard Headquarters, 2100 Second Street SW., Washington, DC 20593–0001, or deliver them to room 3406 at the same address between 9:30 a.m. and 2 p.m., Monday through Friday, except Federal holidays. The telephone number is (202) 267–1477.

Comments on collection-of-information requirements must be mailed also to the Office of Information and Regulatory Affairs, Office of Management and Budget, 725 17th Street NW., Washington, DC 20593, ATTN: Desk Officer, U.S. Coast Guard.

The Executive Secretary maintains the public docket for this rulemaking. Comments will become part of this docket and will be available for inspection or copying at room 3406, U.S. Coast Guard Headquarters, between 9:30 a.m. and 2 p.m., Monday through Friday, except Federal holidays.

FOR FURTHER INFORMATION CONTACT: CDR Mark D. Bobal, Vessel and Facility Operating Standards Division (G–MSO–2), U.S. Coast Guard Headquarters, 2100 Second Street, SW., Washington, DC 20593–0001, telephone (202) 267–1093.

SUPPLEMENTARY INFORMATION:

Request for Comments

The Coast Guard encourages interested persons to participate in this rulem aking by submitting written data, views, or arguments. Persons submitting comments should include their names and addresses, identify this rulemaking [CGD 96–055] and the specific section of this proposal to which each comment applies, and give the reason for each comment. Please submit two copies of all comments and attachments in an unbound format, no larger than 8½ by 11 inches, suitable for copying and electronic filing. Persons wanting acknowledgment of receipt of comments should enclose stamped, self-addressed postcards or envelopes.

The Coast Guard will consider all comments received during the comment period. It may change this proposal in view of the comments.

The Coast Guard plans no public hearing. Persons may request a public hearing by writing to the Marine Safety Council at the address under **ADDRESSES**. The request should include the reason why a hearing would be beneficial. If it determines that the opportunity for oral presentations will aid this rulemaking, the Coast Guard will hold a public meeting at a time and place announced by a later document in the **Federal Register**.

Background and Purpose

Title 46 U.S.C. 3306 authorizes the Coast Guard to prescribe regulations necessary to carry out the inspection of vessels required to be inspected under 46 U.S.C. 3301. The inspection of vessels identified in 46 U.S.C. 3301 is required by statute; however, the specific procedures for conducting inspection are set out in Coast Guard regulations.

In 1992, as part of an initiative known as Maritime Regulatory Reform, the Coast Guard considered a number of alternatives for inspection of U.S. documented or registered vessels. Two of these alternatives are the Alternate Compliance Program (ACP)(46 CFR part 8) and the proposed Streamlined Inspection Program (SIP).

The SIP would be an optional alternative inspection program for owners and operators of U.S. documented or registered vessels,. The objective of the SIP would be to have vessels participate in a constant state of regulatory compliance rather than the traditional cyclical readiness associated with vessels that must undergo Coast Guard periodic inspections. Under this alternative, the vessel owner or operator would work with a Coast Guard representative to develop a Company Action Plan (CAP) and a Vessel Action Plan (VAP). A CAP describes the company's organization and its commitment to the SIP. The CAP also details how the company would train its employees on their specific SIP responsibilities. The VAP describes the Coast Guard regulations that apply to the vessel and the company's tailored plans for its employees to properly examine vessel systems and ensure these systems operate safely. To simplify the CAP and the VAP and to provide consistency throughout the country, the Coast Guard would provide specific guidance for prospective SIP companies and Coast Guard personnel. These guidance documents would be published for each regulatory subchapter applicable to particular types of vessels (e.g., 46 CFR chapter I, subchapters T, K, H, L, I, and D). Plans would contain detailed procedures for periodic examination and testing of vessel equipment and systems by company employees.

To provide flexibility and to encourage greater participation in the SIP, waiver provisions for the SIP procedural requirements are included in this proposed rule. A company could request a waiver for any provision of the proposed SIP regulations. After the cognizant OCMI has reviewed the request, waivers would be considered on a case-by-case basis by the Coast Guard District Commander. For example, a waiver could be granted for a company to allow enrollment of a vessel that does not meet the 3-year ownership rule prior to the date of application as proposed in § 8.515. The waiver provisions in this proposed rule do not affect the equipment, operating, or other requirements of the regulatory subchapter applicable to the vessel.

The SIP would be premised on responsible company personnel performing vessel system examinations at a frequency ordinarily greater than, but at least equal to, examinations conducted by Coast Guard marine inspectors. The Coast Guard would continue to certificate vessels enrolled in the SIP and ensure that they meet applicable safety requirements. Under SIP, the company would have an interactive role in ensuring compliance with applicable laws and regulations. By participating in the development of a VAP with the Coast Guard, the company has greater control of its vessels' operations and procedures, and will be able to measure the success of the SIP. The CAP and VAP are expected to be dynamic working documents that would require continuous maintenance and periodic revision by the company to

ensure proper administration of its SIP as set forth in this proposed rule. A vessel enrolled in the SIP and operating under an approved VAP would still be inspected by a Coast Guard marine inspector, but the procedures for inspection would be contained in the VAP's Inspection Criteria References and the Inspection Schedule and Verification. These documents incorporate all inspection requirements for the vessel and conform to the inspection subchapters applicable to the vessel.

To ensure the high standards of the SIP are upheld, the Coast Guard is proposing disenrollment criteria. Under this proposal, the disenrollment of a vessel from the SIP may take two forms—voluntary and involuntary. Voluntary disenrollment would be granted at the company's request. Failure to maintain compliance with a CAP or VAP may lead to involuntary disenrollment of a company or a vessel. Should this occur, the vessel would be inspected under traditional inspection methods or inspected under the ACP. Disenrolled companies and vessels would have to apply to the cognizant Officer in Charge, Marine Inspection (OCMI), if they wanted to participate in the SIP again. Companies would have the right to appeal the OCMI determinations under this proposed SIP as found in 46 CFR 1.03.

If vessels choose not to participate in the SIP, these vessels would continue to be inspected by the Coast Guard under traditional procedures or, perhaps, opt to be inspected by a Recognized Classification Society under the ACP.

Discussion of Proposed Rules

The Coast Guard proposes to add the SIP as an inspection alternative for qualified U. S. documented or registered vessels. The SIP would include inspections for certification, reinspections, and discrepancy follow-ups. Dry-dock examinations would not be included in the SIP. Dry-dock examinations would be conducted as prescribed by the operational inspection subchapter in 46 CFR chapter I applicable to each vessel. As SIP performance data is collected and evaluated by the Coast Guard, dry-dock examinations may be added to this program.

The Coast Guard's proposed process to consider a company and at least one of its vessels for the SIP can be broken down into four phases as described in the following discussion.

Phase (1): Application

This phase would begin with a company's application submission to the OCMI and end with the OCMI's acceptance or rejection of the applicant. Illustration (1) shows the proposed process and lists the proposed regulatory sections for each step.

BILLING CODE 4910–14–P

Illustration (1) -- Application to OCMI

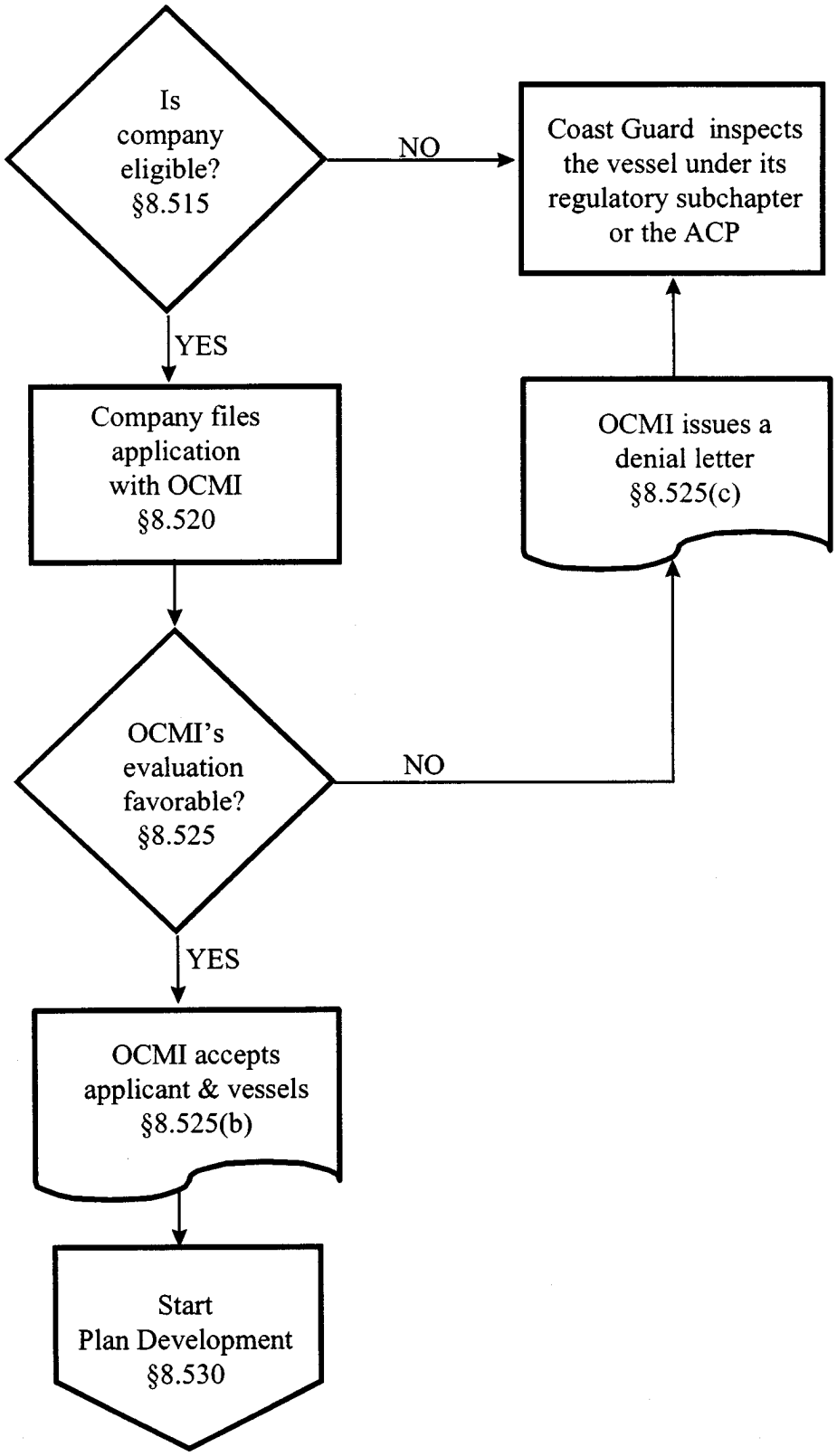

Illustration (1) -- Application to OCMI

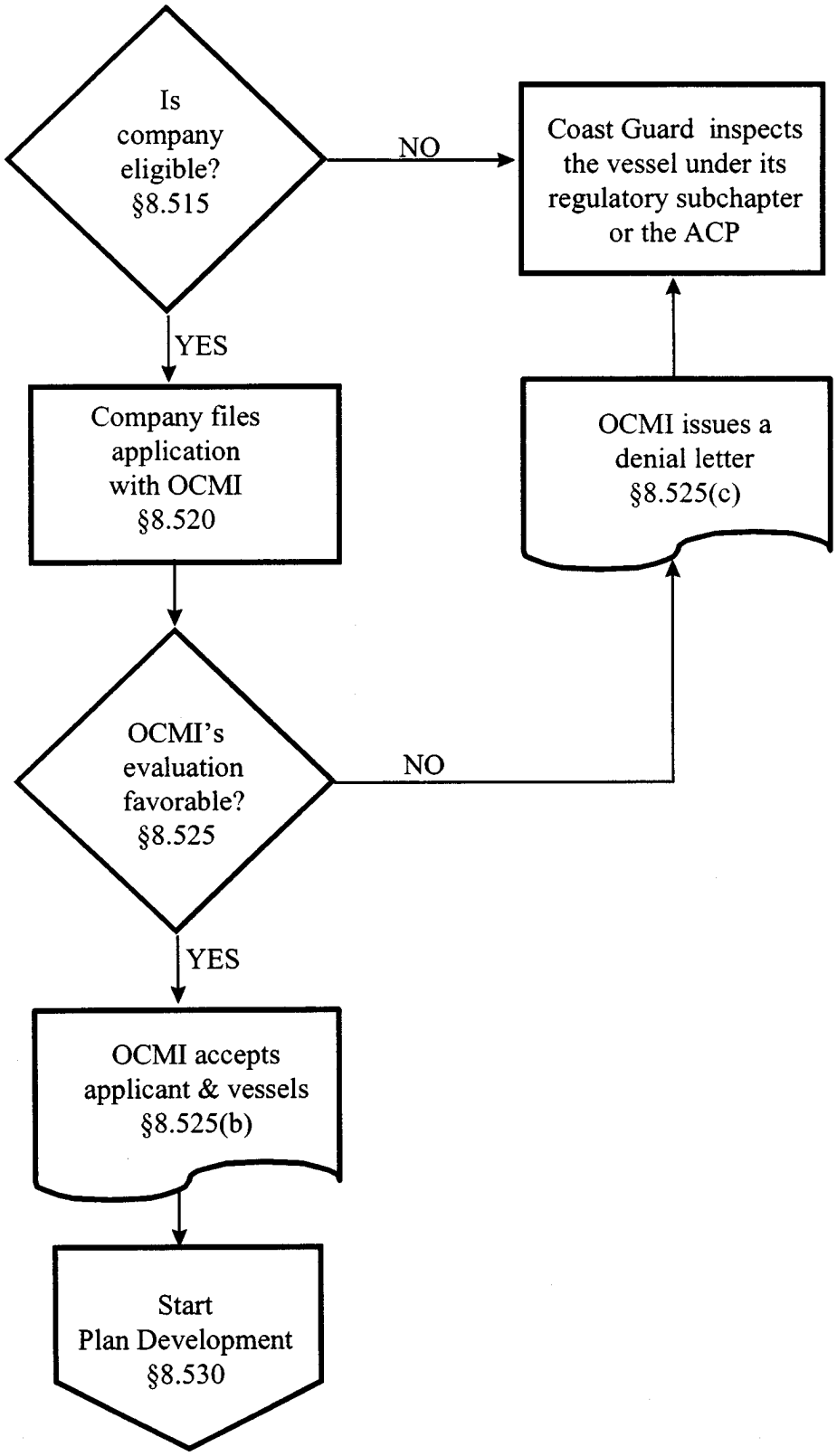

The applying company and at least one of its vessels would have to meet certain eligibility requirements to be accepted in the SIP. The proposal includes a requirement for the company to operate the vessel for at least 3 years prior to the SIP application. This ensures that the Coast Guard would have sufficient documentation on the vessel's operating history to properly evaluate the company and vessel application. The Coast Guard is proposing other eligibility requirements that would ensure that a vessel has been operating in compliance with Coast Guard regulations. For example, the company would have to reconcile all overdue civil penalties or user fees and the vessel could not have documented material deficiencies which indicate operation outside the requirements contained in the COI. These documented deficiencies do not apply to the provisions of deviations from navigation safety rules (33 CFR 164.51 through 164.55) or sailing short (46 CFR 15.725).

Phase (2): Plan Development

During this phase, the company and vessel personnel would work with a Coast Guard SIP Advisor, who would be a qualified Coast Guard marine inspector assigned by the OCMI as resources permit. Together they would develop the CAP and the VAP(s), the detailed documents that would govern how company employees would be trained and would test and examine the vessel's systems under the SIP. Illustration (2) shows the proposed process and lists the proposed regulatory sections for each step.

Illustration (2) -- Plan Development

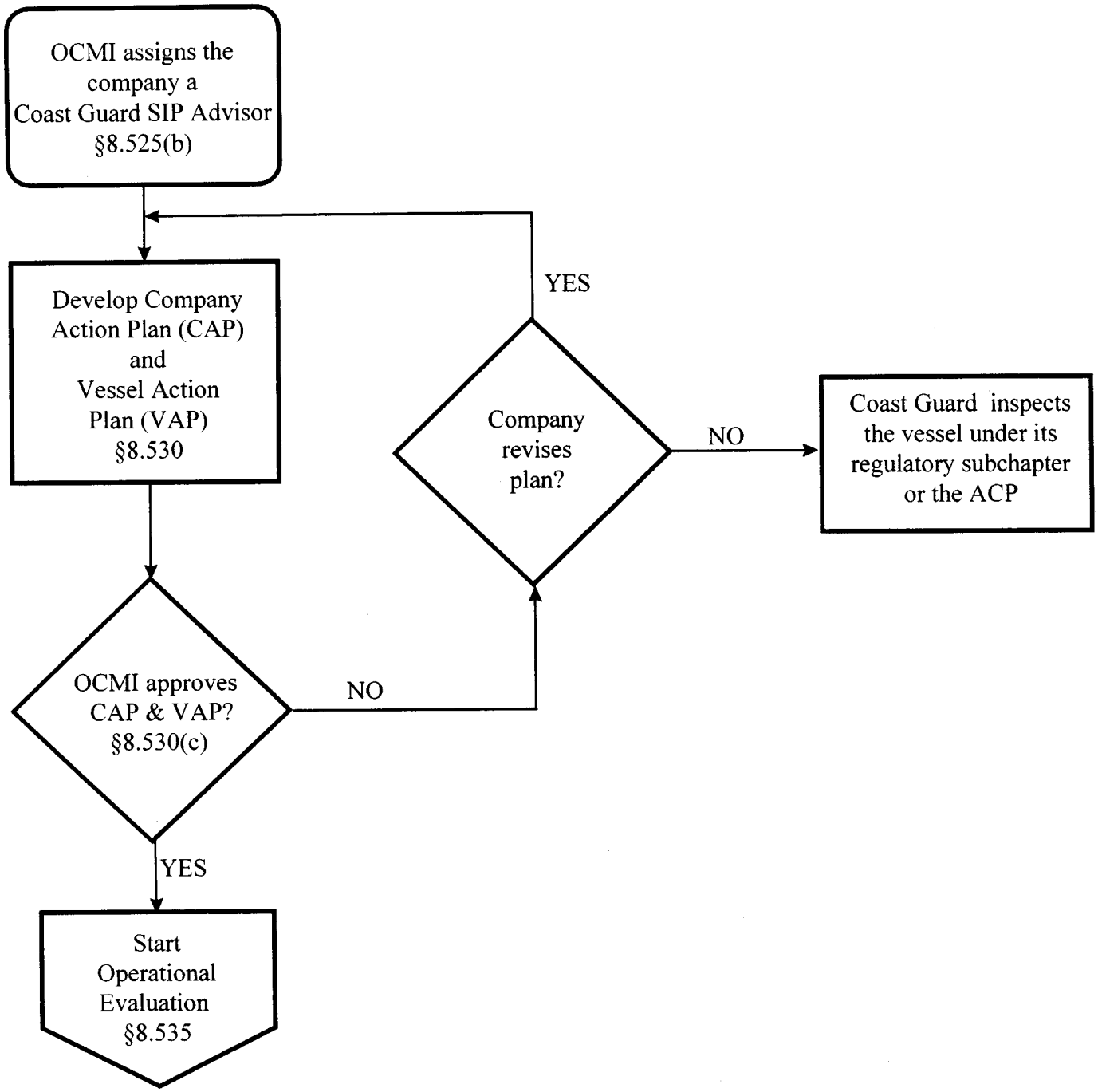

The Coast Guard SIP Advisor would initially help the company to develop the CAP and first VAP. After OCMI approval, additional VAPs would be created addressing other company vessel's and their specific equipment and systems. Development of the CAP and VAP(s) is an iterative process. The CAP and VAP may need to be revised to address concerns such as vessel specific equipment or personnel training needs. This planning phase would end with OCMI approval of all VAP(s) and any vessels would then enter the operational evaluation phase.

Phase (3): Operational Evaluation

During this phase, a participating vessel would be operated under its VAP and inspected by the Coast Guard SIP Advisor in accordance with the VAP. The company would train its employees to follow procedures in the VAP. Illustration (3) shows the proposed process and lists the proposed regulatory sections for each step.

Illustration (3) -- Operational Evaluation

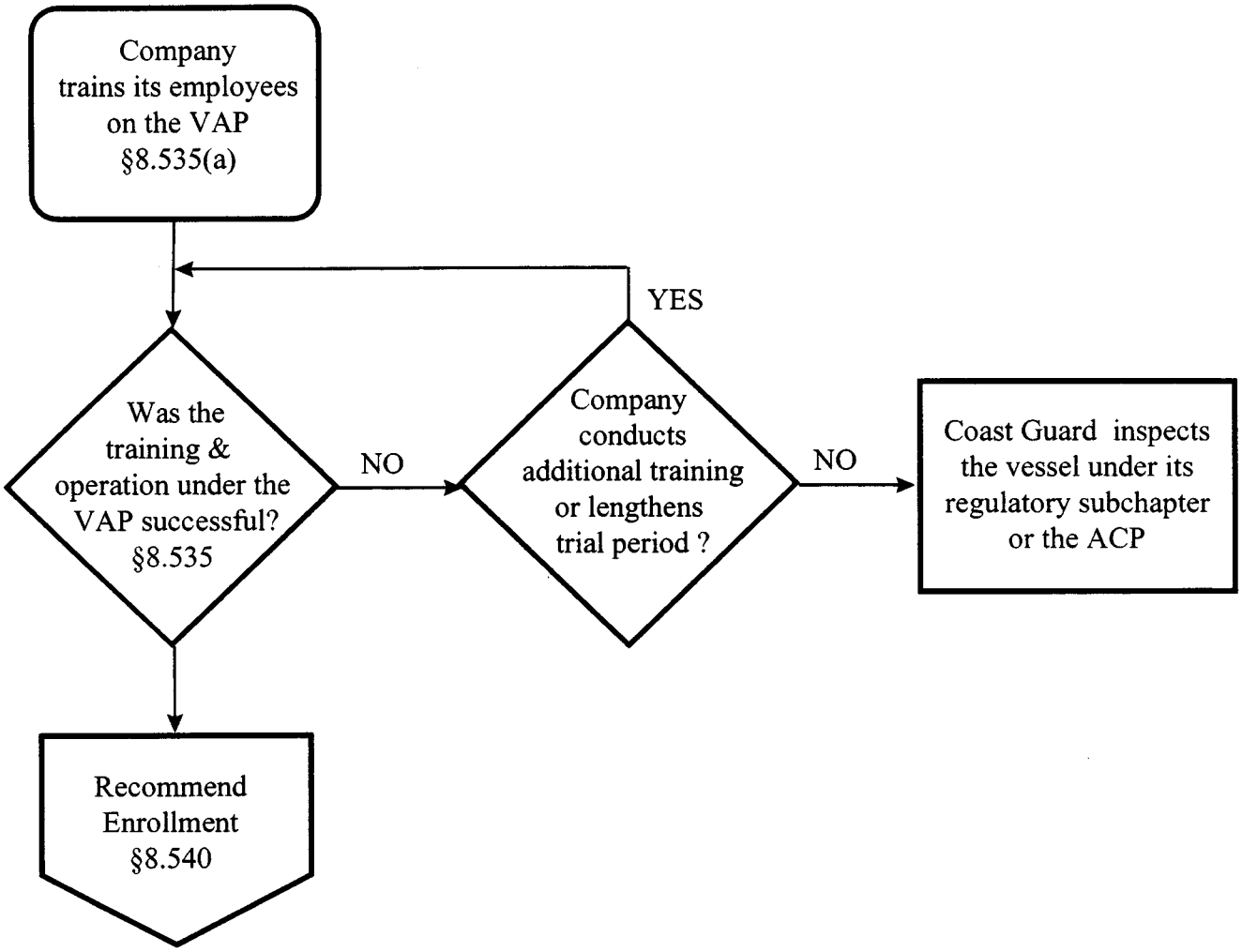

After OCMI approval of the CAP and VAP(s), the company would begin implementation of its SIP. This would be a two-step process consisting of employee training and a SIP trial period. Company training would provide company employees the skills they need to perform their specific SIP responsibilities.

When the training is completed, a trial period of at least 3 months would begin to test the effectiveness of the VAP on each vessel. During the trial period, problems would be documented by company personnel and the Coast Guard SIP Advisor. The company may be required to modify its VAP procedures, if necessary.

Phase (4): Enrollment

Following a successful operational evaluation phase, the cognizant OCMI would enroll a vessel in the SIP and authorize full implementation of the SIP through a specific endorsement on the vessel's COI. Illustration (4) shows the proposed process and lists the proposed regulatory sections for each step.

Illustration(4) -- Enrollment

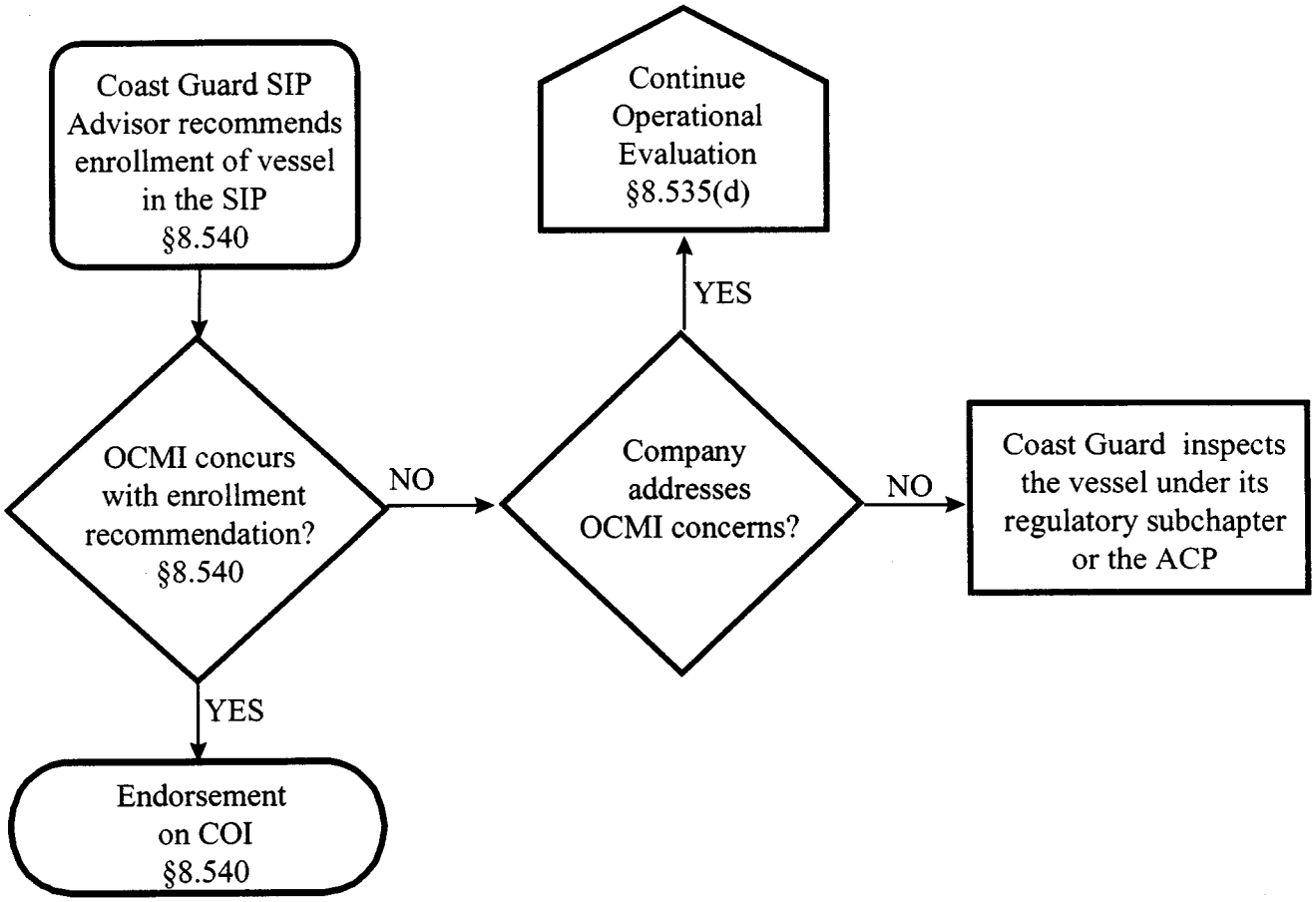

BILLING CODE 4910–14–C

Regulatory Evaluation

This proposal is not a significant regulatory action under section 3(f) of Executive Order 12866 and does not require an assessment of potential costs and benefits under section 6(a)(3) of that order. It has not been reviewed by the Office of Management and Budget under that order. It is not significant under the regulatory policies and procedures of the Department of Transportation (DOT) (44 FR 11040; February 26, 1979).

The Coast Guard expects the economic impact of this proposal to be so minimal that a full Regulatory Evaluation under paragraph 10e of the regulatory policies and procedures of DOT is unnecessary. The Coast Guard expects this proposal to provide an economic benefit to the owners and operators of U.S. documented or registered vessels. Currently, 11,800 U.S. documented or registered vessels may be eligible to participate in this optional Streamlined Inspection Program (SIP). Entrance into a SIP is voluntary. Because the program is new, it is difficult to estimate how many vessel owners will choose to develop a Vessel Action Plan (VAP) and seek enrollment. Some Coast Guard offices have been working with company owners on prototype programs that are similar to the proposed SIP.

Over the next 3 years, the Coast Guard estimates that the following number of vessels would voluntarily enroll in the SIP:

- 274 small passenger vessels (subchapter T).
- 78 small passenger vessels (subchapter K).
- 48 large passenger vessels (subchapter H).
- 131 offshore supply vessels (subchapter L).
- 29 cargo vessels (subchapter I).
- 4 tank ships (subchapter D).
- 942 tank barges or oil spill response vessels (OSRVs) (subchapter D or O).

These estimates of vessel enrollment reflect both the number of vessels presently in prototype programs similar to the proposed SIP and the number of vessels that could enter in the SIP within the next 3 years.

Industry Cost

Cost estimates for the proposed SIP were based on the incremental costs company owners and operators have incurred participating in prototype programs similar to the proposed SIP. Company owners and operators would have different economic impacts from this program depending on the number, class, and size of the vessels that they enter in the program. The time and resources an owner or operator may spend developing the VAP would vary depending on the vessel's system complexity (simple tank barge systems or multi-faceted large passenger vessel systems), the current company management infrastructure (availability of support staff, system expertise and strength of organizational policies), and the number of crewmembers or employees involved with the plan's implementation. The company time spent developing and implementing the VAP(s) is considered part of this proposal's collection-of-information burden.

Under this proposal, vessel owners and operators would incur some SIP implementation training costs. These costs reflect a slight increase in existing crew or employee training costs to ensure responsible personnel have the skills needed to conduct maintenance and examinations of vessel equipment a′nd systems required by the VAP.

One small passenger vessel owner (regulated under subchapter K), currently in a prototype program estimated that training on the VAP took approximately 35 hours for four employees required to properly conduct and record the tests and examinations under the VAP. Based on an hourly salary of $16 for the trainer, and an average hourly salary of $13 for each of the four employees, a one-time training cost is estimated to be $2,380 for a similar passenger vessel.

A tank barge owner currently in a prototype program estimated that training on the VAP took approximately 40 days for 16 employees required to conduct and record examinations under the VAP. Based on an 8-hour training day, an hourly salary of $33.65 for the trainer, and an average hourly salary of $25 for each of the employees, the training cost is estimated to be $138,770 for a similar 200-barge fleet.

One-time training costs for vessels in the SIP is estimated to range from $700 ($138,770 divided by a 200-simple-system fleet) to $3,000 (for one large multi-system vessel) per vessel. Once the VAP is approved and the vessel is enrolled in the SIP, it was assumed that any further training would be incorporated into established company training and vessel maintenance programs at little or no additional cost. Therefore, recurring training costs were not included in the cost estimates for this proposal.

Some owners and operators participating in prototype programs purchased computers and other administrative items to assist in the collation of plan information. While a computer could reduce the administrative time spent on developing the VAP, a company would not be required to have a computer in this proposal. Because a company could meet all of the SIP criteria without a computer, no equipment costs were included in the cost estimate for this proposal. The Coast Guard specifically solicits comments on potential training costs or other costs companies may incur if voluntarily enrolled in SIP.

Industry Benefits

Benefits from the proposed SIP are expected to vary and are not currently quantifiable. Participants in prototype programs stated that the cost to participate and maintain this type of voluntary program has been partially offset by an increased availability of their vessels for profit-making ventures. Some Coast Guard marine inspectors have noted as much as a 50 percent reduction in their onboard inspection time on vessels participating in a prototype program. Other benefits have also been reported by prototype program participants. These participants reported that they have experienced the following benefits:

- The vessel's material condition was kept at a consistently high level and there were fewer major repairs.
- The company's cost of maintaining the vessel in regulatory compliance was reduced and expenses were more evenly distributed over time.
- The licensed mariners recognized their role in regulatory compliance and welcomed the empowerment to conduct the procedures specified in the VAP.
- The unlicensed crew experienced more rapid professional growth as they were trained and became familiar with conducting the step-by-step verification procedures.
- The communication between the company and the Coast Guard was open and problem-solving.
- The vessel's working environment was better than it was under the traditional inspection program.
- There were fewer insurance claims and personnel injuries.
- The vessel's maintenance records provide more information and are better than the records the company required on its own.

There were no monetary estimates for the value of these benefits. The Coast Guard specifically seeks comments on these potential benefits and their value for this proposed program.

User Fees

The Coast Guard expects that once implemented, the proposed SIP would result in fewer onboard Coast Guard inspection hours required to inspect and

certify participating vessels. This proposal, however, would not change existing vessel inspection user fees. When sufficient data exists regarding the Coast Guard costs required to administer the new program, the Coast Guard plans to review the existing user fee structure to determine if a reduction in fees is warranted.

Government Costs

This proposal has short-term costs to the Coast Guard but, in the long-term, will save resources. In the initial implementation of the proposed SIP, Coast Guard inspectors would need to review company applications, assist companies in plan development, and oversee the operational implementation of the plan. The time required by this program varies depending on the type of vessel and the current company management infrastructure. It may take the Coast Guard as little as 3 hours to verify a tank barge company's eligibility, 18 hours to assist in developing and reviewing its plan, and 8 hours to oversee its operation prior to a favorable assessment of the program by the Coast Guard marine inspector. However, the Coast Guard may take significantly more time to assist in developing, reviewing, and overseeing the plans and operation of a large passenger vessel because of its complex onboard systems and the large number of company personnel involved in managing the SIP. After the initial investment of Coast Guard resources (time and training) to assist vessel personnel with their plans, the Coast Guard expects to reduce the amount of time taken to inspect and certify SIP enrolled vessels.

Small Entities

Under the Regulatory Flexibility Act (5 U.S.C. 601 *et seq.*), the Coast Guard must consider whether this proposal, if adopted, will have a significant economic impact on a substantial number of small entities. ''Small entities'' may include (1) small businesses and not-for-profit organizations that are independently owned and operated and are not dominant in their fields and (2) governmental jurisdictions with populations of less than 50,000.

The Coast Guard expects this proposal to have a positive economic impact for owners and operators who choose to participate in the SIP. Approximately 1,388 owners and operators may volunteer for the proposed SIP within the next 3 years. Of these, 334 small passenger vessels, 52 offshore supply vessels, and 94 tank barges or OSRV's are estimated to be owned by small entities. Under Section 601 of the Regulatory Flexibility Act, the Coast Guard has provided a flexible approach which meets the needs of each company and its vessels and would benefit any small businesses choosing to enter the proposed program. This proposal would have no impact on vessel owners who do not choose to participate in the program.

This proposal would provide an optional way of complying with existing inspection regulations and would only have an economic impact if the vessel owner chooses to use the SIP instead of the existing Coast Guard scheduled inspection program. For a small entity, plan development may be too large an initial investment recoverable after too long a time for them to see the benefits. To assist small entities in plan development, the Coast Guard intends to provide detailed guidance tailored to the small passenger vessel operator and to other small entities that operate other vessel types. The Coast Guard proposal also provides for one-on-one time with Coast Guard inspectors to assist in plan development. Benefits from the proposed SIP are expected to be especially positive to those small entities with more than one vessel in the program because after developing the first CAP and VAP, costs would be minimal for developing VAP(s) for the remaining vessels.

Because this proposed program is voluntary and provides benefits to small entities willing to invest the time and training needed for enrollment, the Coast Guard certifies under 5 U.S.C. 605(b) that this proposal, if adopted, will not have a significant economic impact on a substantial number of small entities. If however, you think that your business or organization qualifies as a small entity and that this proposal would have a significant economic impact on your business or organization, please submit a comment to the address under **ADDRESSES** explaining why you think it qualifies and in what way and to what degree this proposal would economically affect it.

Assistance for Small Entities

In accordance with section 213(a) of the Small Business Regulatory Enforcement Fairness Act of 1996 (Pub. L. 104–121), the Coast Guard will provide assistance to small entities to determine how this proposed rule applies to them. If you are a small business and need assistance understanding the provisions of this proposed rule please contact CDR Mark D. Bobal, Vessel and Facility Operating Standards Division (G–MSO–2), U.S. Coast Guard Headquarters, 2100 Second Street, SW., Washington, DC 20593–0001, telephone (202) 267–1093.

Collection of Information

Under the Paperwork Reduction Act (44 U.S.C. 3501 *et. seq.*), the Office of Management and Budget (OMB) reviews each rule that contains a collection-of-information requirement to determine whether the practical value of the information is worth the burden imposed by its collection. Collection-of-information requirements include reporting, recordkeeping, notification and other similar requirements.

This proposal contains collection-of-information requirements in the following sections: §§ 8.520, 8.530, 8.535, and 8.550. The following particulars apply: DOT NO: 2115–AF37.

OMB Control No(S).: 2115–0578, 2115–0592, 2115–0071, 2115–0025.

Administration: U.S. Coast Guard.

Title: 2115–0578: Various forms and posting requirements under 46 CFR chapter I, subchapters K and T ''Small Passenger Vessels (under 100 gross tons).''

2115–0592: 46 CFR chapter I, subchapter L—Reporting, Recordkeeping and Marking Requirements.

2115–0071: Official Logbook.

2115–0025: Oil Record Book for Ships.

Need for Information: Vessel records are needed to document the compliance of a vessel with U.S. regulations and law. Company owners or operators wishing to enroll their vessel(s) in the program must submit the application(s), develop the Vessel Action Plan(s), and keep records on plan activities conducted by designated company employees.

Proposed Use of Information: The information would be used by the Coast Guard during vessel inspections to help determine if the vessel is in compliance with the requirements necessary for issuance of a certificate of inspection (COI).

Frequency of Response: Records must be kept and reports must be submitted whenever the company representative performs activities required by the VAP. These activities generally include a crew member or company employee completing a checklist for each onboard system on a monthly or quarterly basis, depending on the system and the VAP. Estimates of the increase in the collection burden differ based on the vessel's type, the company's existing operational guides and internal inspection documents (if any), and the vessel system knowledge of those company personnel assigned to write the plan. The development of the VAP

would be a one-time collection burden. Recurring collection burdens would be created when company employees keep records of their activities to ensure the plan is being followed. Based on prototype programs similar to the proposed SIP, the following collection burdens are estimated for each vessel type:

- Small passenger vessel (subchapter T): Vessel Action Plan development: 70 hours. Annual report time after plan approval: 9 hours in addition to current collections under 2115–0578.
- Small passenger vessel (subchapter K): Vessel Action Plan development: 100 hours. Annual report time after plan approval: 12 hours in addition to current collections under 2115–0578.
- Large passenger vessel (subchapter H):

Vessel Action Plan development: 100 hours.

Annual report time after plan approval: 14 hours in addition to current collections under 2115–0071.

- Offshore supply vessel (subchapter L):

Vessel Action Plan development: 60 hours.

Annual report time after plan approval: 18 hours in addition to current collections under 2115–0592.

- Cargo vessel (subchapter I):

Vessel Action Plan development: 80 hours.

Annual report time after plan approval: 14 hours in addition to current collections under 2115–0071.

- Tank Ship (subchapter D):

Vessel Action Plan development: 100 hours.

Annual report time after plan approval: 16 hours in addition to current collections under 2115–0071.

- Tank Barge and Oil Spill Response Vessel (subchapter D):

Vessel Action Plan development: 40 hours.

Annual report time after plan approval: 3 hours in addition to current collections under 2115–0025.

Burden Estimate: The Coast Guard is seeking an authorized increase in the collection-of-information burden for the following existing OMB control numbers:

2115–0578: From 405,608 burden hours to 416,869 hours.

2115–0592: From 2,051 burden hours to 51,467 hours.

2115–0071: From 1,750 burden hours to 5,018 hours.

2115–0025: From 10,418 burden hours to 49,559 hours.

Respondents: The number of respondents for each collection will be amended as follows:

2115–0578: Remains the same.

2115–0592: Increases from 45 respondents to 528 respondents.

2115–0071: Remains the same.

2115–0025: Increases from 586 respondents to 2,516 respondents.

Form(s): None.

Average Burden Hours per Respondent: Those respondents voluntarily enrolled in the SIP would have an increased average burden hour per respondent as follows:

From 41 hours to 76 hours per respondent for 2115–0578.

From 46 hours to 78 hours per respondent for 2115–0592.

From 5 hours to 46 hours per respondent for 2115–0071.

From 18 hours to 33 hours per respondent for 2115–0025.

The Coast Guard has submitted the proposed requirements to the OMB for review under section 3504(h) of the Paperwork Reduction Act (44 U.S.C. 3501 *et seq.*). Persons submitting comments on the requirements should submit their comments both to OMB and the Coast Guard where indicated under **ADDRESSES**.

Federalism

The Coast Guard has analyzed this rule under the principles and criteria contained in Executive Order 12612 and has determined that this rule does not have sufficient federalism implications to warrant a Federalism Assessment.

The authority to regulate safety requirements of U.S. vessels is delegated to the Coast Guard by statute. Furthermore, because these vessels tend to move from port to port in the national market place, these safety requirements need to be national in scope to avoid numerous, unreasonable and burdensome variances. Therefore, this action would preempt State action addressing the same matter.

Environment

The Coast Guard considered the environmental impact of this rule and concluded that under paragraph 2.B.2 of Commandant Instruction M16475.1B, this rule is categorically excluded from further environmental documentation. This rule is excluded based on its inspection and equipment aspects. A Categorical Exclusion Determination is available in the docket for inspection or copying where indicated under **ADDRESSES**.

List of Subjects in 46 CFR Part 8

Administrative practice and procedures, Organization and functions (Government agencies), Reporting and recordkeeping requirements, Incorporation by reference.

For the reasons set out in the preamble, the Coast Guard proposes to amend 46 CFR part 8 as follows:

PART 8—VESSEL INSPECTION ALTERNATIVES

1. The authority citation for part 8 is revised to read as follows:

Authority: 46 U.S.C. 3103, 3306; 46 U.S.C. 3316, 3703; 49 CFR 1.45.

2. Subpart E, consisting of §§ 8.500 through 8.570, is added to read as follows:

Subpart E—Streamlined Inspection Program

Sec.
8.500 Purpose.
8.505 Scope and applicability.
8.510 Definitions.
8.515 Eligibility.
8.520 Application.
8.525 OCMI review and action.
8.530 Plan development and approval.
8.535 Training and operational evaluation.
8.540 Enrollment in SIP.
8.545 Scope of inspection for enrolled vessels.
8.550 Plan review and revisions.
8.555 Disenrollment.
8.560 Waiver.
8.565 Appeal.
8.570 Interim approval of prototype company or vessel plans.

Subpart E—Streamlined Inspection Program

§ 8.500 Purpose.

(a) This subpart establishes the Streamlined Inspection Program (SIP) which is an alternative inspection program for U.S. documented or registered vessels required to maintain a valid certificate of inspection (COI).

(b) This subpart sets out the eligibility and application requirements and the plan development and approval procedures for enrollment of companies and their vessels in the SIP.

§ 8.505 Scope and applicability.

(a) This subpart applies to U.S. documented or registered vessels that have a valid COI.

(b) A vessel enrolled in the SIP will be inspected in accordance with its approved Vessel Action Plan (VAP).

(c) The SIP includes all inspections required to renew and maintain a valid COI. The SIP does not include dry-dock examinations, unscheduled inspections related to vessel casualties, equipment repair or replacement, or vessel modifications. Those inspections will be conducted in accordance with the subparts applicable to the vessel.

§ 8.510 Definitions.

The following definitions apply to this subpart:

Civil penalty means a final assessment under the provisions of 33 CFR part 1, subpart 1.07 or part 20 of this chapter.

Coast Guard SIP Advisor means the Coast Guard marine inspector assigned by the Officer in Charge, Marine Inspection (OCMI), to assist in the development of an action plan.

Company means the owner of the vessel or any other organization or person, such as the manager or the bareboat charterer, who operates a vessel under the SIP.

Company Action Plan (CAP) means the document describing a company's organization, policies, and responsibilities required for participation in the SIP.

Company SIP Agent means the individual who is responsible for the Company Action Plan and the Vessel Action Plan development and implementation and who has the authority to bind the company to the terms of these plans.

Correction Report means a document which sets out specific vessel deficiencies and is used to record their correction by the company.

Documented deficiency means an incident documented in a Coast Guard record in which the condition of a vessel, its equipment, or its operation was not in compliance with Coast Guard regulations.

Exam checklist means the form that is used to record the periodic examinations required by the VAP to be conducted by company employees.

Inspection Criteria References (ICR) means the individual pages in the VAP that list each item on the vessel required by regulation to be periodically inspected.

Inspection Schedule and Verification (ISV) means the document that lists the items to be inspected and the intervals for their inspection, and on which is recorded the completion of required examinations and tests conducted by designated company employees.

Prototype vessel plan means the SIP plan developed for a vessel participating in a Coast Guard District- or OCMI-endorsed SIP before [Date of publication of the final rule in the **Federal Register**].

Reportable casualty means a marine casualty or accident required to be reported under 46 CFR part 4, subpart 4.05 of this chapter.

Streamlined Inspection Program (SIP) means the alternative inspection program set out in this subpart.

Vessel Action Plan (VAP) means the document that prescribes procedures for maintenance, examination, and inspection of a vessel enrolled in the SIP.

§ 8.515 Eligibility.

(a) The company must—

(1) Have owned or operated at least one U.S. documented or registered vessel for a minimum of 3 consecutive years before the SIP application date; and

(2) Have paid all civil penalties and user fees.

(b) Each vessel must—

(1) Have been in operation with an eligible owner or operator for at least 3 consecutive years before the SIP application date;

(2) Have had no revocation of its COI during the 3 years before the SIP application date; and

(3) Have no documented deficiency for the following in the 3 years before the SIP application date:

(i) Any vessel operation inconsistent with the operating details specified on its COI.

(ii) Operating without the required amount of lifesaving appliances on board the vessel or with inoperable survival craft.

(iii) Operating without the required firefighting equipment on board the vessel or with an inoperable fire pump(s).

(iv) Unauthorized modifications to the vessel's approved systems or structure, such as fixed firefighting systems, pollution prevention arrangements, overcurrent protection devices, or watertight boundary arrangements.

(v) Operating without the required navigation equipment on board the vessel or with inoperable navigation equipment.

§ 8.520 Application.

To apply for SIP enrollment, a company will submit an application, in writing, to the cognizant OCMI. The application must contain the following:

(a) A statement that the company and prospective vessel(s) meet the requirements of § 8.515.

(b) A summation of the company's current status in relation to § 8.530(a).

(c) The name and official number of the vessel(s) the company intends to enroll in the SIP.

(d) The name and contact information for the Company SIP Agent.

§ 8.525 OCMI review and action.

(a) The cognizant OCMI will review Coast Guard records for the 3 years before the SIP application date to verify the eligibility of the company and each vessel listed in the SIP application.

(b) If the company and one or more of its vessels meets the eligibility requirements contained in § 8.515, the cognizant OCMI will notify the company of its eligibility and assign a Coast Guard SIP Advisor.

(c) If, according to Coast Guard records, a company or vessel does not meet the eligibility requirements contained in § 8.515, the cognizant OCMI will notify the company in writing of its ineligibility with a list the reasons for not accepting the company or a vessel.

§ 8.530 Plan development and approval.

The Company SIP Agent will develop the CAP and VAP with guidance from the Coast Guard SIP Advisor for OCMI approval.

(a) *Company Action Plan.* The CAP shall include at least the following:

(1) A copy of the OCMI CAP approval letter (once the CAP is approved).

(2) An organization commitment statement.

(3) A company organization chart that includes the name(s) of the designated SIP support personnel who will be responsible for implementation and oversight of the approved CAP and VAP(s).

(4) A statement describing the responsibilities and authorities of personnel involved in the examination and maintenance of the vessel(s) for the company.

(5) A description of the method the company will use to integrate the applicable subpart regulations into its SIP and the method or system used to initiate corrective action.

(6) A description of the company's safety program.

(7) A description of the company's environmental protection program.

(8) A description of the company's training infrastructure, the method used to track and record training for individual employees, and the training required for the designated SIP support personnel to implement the CAP and the VAP.

(9) A master list of all SIP documents and ICRs that the company intends to use in its VAP(s).

(10) Appendices for each approved VAP.

(b) *Vessel Action Plan.* Each VAP shall include at least the following:

(1) A copy of the OCMI VAP approval letter (once the VAP is approved).

(2) A description of the method that will be used to integrate the VAP into the vessel's regular operations.

(3) Vessel-specific ICRs.

(4) Vessel-specific ISV forms.

(5) Vessel-specific exam checklists.

(6) Correction Reports.

(c) *Plan Approval.* The Company SIP Agent will submit the CAP and each VAP to the cognizant OCMI for approval. Once approved, a copy of the VAP shall be kept on board the vessel.

§ 8.535 Training and operational evaluation.

When the CAP and VAP(s) have been approved by the cognizant OCMI, the company may begin training and operating under the plans. This evaluation phase includes the following:

(a) The company shall provide the designated SIP support personnel with training as required by the CAP.

(b) The vessel must operate and be examined under the VAP for a period of at least 3 months.

(c) During the operational periods, the Coast Guard SIP Adviser will conduct an ongoing evaluation of the vessel's operation, the training records, and the ability of all designated persons to perform their assigned functions under the VAP. The Coast Guard SIP Advisor will report periodically to the cognizant OCMI and the Company SIP Agent on the vessel's performance, and make recommendations, if needed.

(e) Revisions recommended under paragraph (c) of this section, or any additional operational periods under a revised CAP or VAP as may be required by the cognizant OCMI must be completed prior to enrollment.

§ 8.540 Enrollment in SIP.

Upon recommendation of the Coast Guard SIP Advisor, the OCMI may issue an enrollment letter to a vessel and endorse the vessel's COI to reflect SIP enrollment. Subsequent inspections covered under this subpart will be conducted in accordance with the approved VAP.

§ 8.545 Scope of inspection for enrolled vessels.

(a) A Coast Guard marine inspector will conduct required annual and follow-on inspections necessary to ensure compliance with Coast Guard regulations.

(b) A Coast Guard marine inspector will conduct the inspections in paragraph (a) of this section in accordance with the procedures set out in the VAP. These inspections will normally include the following:

(1) *Administrative review.* This portion of the inspection consists of a review of prior Coast Guard SIP inspection forms, review of the contents of the VAP, and review of other certifications of equipment and vessel systems.

(2) *SIP performance review.* This portion of the inspection consists of a review of vessel SIP documentation and records, review of the SIP procedures, and a company evaluation of their SIP.

(3) *Materiel review.* This portion of the inspection consists of a general examination of the vessel, witnessing the examination of selected items under the VAP by company designated SIP support personnel, inspection of selected items, and witnessing of crew participation in drills by the Coast Guard marine inspector.

(4) *Conclusion and recommendations.* This portion of the inspection contains the Coast Guard marine inspector's evaluation of regulatory compliance of the vessel under its VAP.

(c) A Coast Guard marine inspector may conduct any additional tests or examinations of vessel equipment or systems necessary to ensure compliance with Coast Guard regulations during an inspection covered in paragraph (a) of this section.

§ 8.550 Plan review and revisions.

(a) *Mandatory reviews and revisions.* The CAP and VAP(s) must be reviewed and revised as follows:

(1) Every 2 years after the plan approval date, the company shall review the CAP and update all information required by § 8.530.

(2) Every 5 years after the plan approval date, the Coast Guard SIP Advisor and the Company SIP Agent will review the VAP.

(3) If a reportable casualty occurs, the cognizant OCMI will review the portions of the VAP related to equipment, training, personnel, and systems involved in the casualty and determine whether revisions to the VAP are appropriate.

(4) When statutes or regulations change, the appropriate sections of the CAP and VAP(s) will be revised.

(b) *Discretionary reviews and revisions.* The CAP and VAP(s) may be reviewed and revised by the company at any time. The revisions must be submitted to the cognizant OCMI for approval.

§ 8.555 Disenrollment.

(a) *Voluntary disenrollment.* A company may request SIP disenrollment (which includes all of its vessels) or may request disenrollment of a specific vessel from the SIP by writing to the cognizant OCMI. The OCMI will then issue a letter disenrolling the vessel or company. Disenrolled vessels will be inspected in accordance with the requirements of 46 CFR part 2, subpart 2.01 of this chapter.

(b) *Company disenrollment.* The OCMI may issue a letter disenrolling the company if the company no longer has at least one enrolled vessel or if the company fails to continuously meet the eligibility requirements in § 8.515.

(c) *Vessel disenrollment.* The OCMI may issue a letter disenrolling a vessel if any one or more of the following occurs:

(1) The sale of the vessel.

(2) A finalized letter of warning or assessment of a civil penalty for—

(i) Operating outside the scope of the vessel's COI or Stability Letter;

(ii) Not reporting a personnel or material casualty required to be reported under 46 CFR part 4; or

(iii) A material deficiency listed in § 8.515(b)(3).

§ 8.560 Waiver.

(a) A Coast Guard District Commander may waive any requirement of this subpart—

(1) If good cause exists for granting a waiver; and

(2) If the safety of the vessel and those on board will not be adversely affected.

(b) Requests for waiver of any requirement of this subpart must be submitted in writing to the cognizant OCMI for review before forwarding to the Coast Guard District Commander for action.

(c) A copy of each waiver under this section shall be maintained at all times in the VAP.

§ 8.565 Appeal.

A company may appeal any decision or action taken under this subpart in accordance with 46 CFR part 1, subpart 1.03 of this chapter.

§ 8.570 Interim approval of prototype company or vessel plans.

(a) A company operating under an approved prototype company or vessel plan must apply, in writing by [*Date 3 months after the effective date of the final rule*], to the cognizant OCMI for approval to continue operating under the plans while revisions are developed to bring the prototype company or vessel plan into conformance with this subpart. The OCMI may approve the request for a period of up to 3 years.

(b) A company that does not request approval as required by paragraph (a) of this section or does not obtain approval to continue operating under a prototype company or vessel plan by [*Date 6 months after the effective date of the final rule*], may no longer operate under the plans and will be inspected in accordance with the requirements of 46 CFR part 2, subpart 2.01 of this chapter.

Dated: March 21, 1997.

J.C. Card,

Rear Admiral, U.S. Coast Guard, Assistant Commandant for Marine Safety and Environmental Protection.

[FR Doc. 97–8509 Filed 4–7–97; 8:45 am]

BILLING CODE 4910–14–M

federal register

Tuesday
April 8, 1997

Part IV

Department of Housing and Urban Development

Fiscal Year 1997; Funding Availability for Continuum of Care Homeless Assistance; Supportive Housing Program (SHP); Shelter Plus Care (S+C); Sec. 8 Moderate Rehabilitation Single Room Occupancy Program for Homeless Individuals (SRO); Notice

DEPARTMENT OF HOUSING AND URBAN DEVELOPMENT

[Docket No. FR–4182–N–01]

Fiscal Year 1997 Notice of Funding Availability for Continuum of Care Homeless Assistance; Supportive Housing Program (SHP); Shelter Plus Care (S+C); Sec 8 Moderate Rehabilitation Single Room Occupancy Program for Homeless Individuals (SRO)

AGENCY: Office of the Assistant Secretary for Community Planning and Development, HUD.

ACTION: Notice of funding availability (NOFA).

SUMMARY: This Notice announces the 1997 homeless assistance competition designed to help communities develop Continuum of Care systems to assist homeless persons.

The process of developing a Continuum of Care system is part of the community's larger effort of developing a Consolidated Plan. For a community to successfully address its often complex and interrelated problems, including homelessness, the community must marshall its varied resources—community and economic development resources, social service resources, housing and homeless assistance resources—and use them in a coordinated and effective manner. The Consolidated Plan serves as the vehicle for a community to comprehensively identify each of its needs and to coordinate a plan of action for addressing them.

The funds available under this NOFA can be used under any of three programs that can assist in creating community systems for combating homelessness. The three programs are: (1) Supportive Housing; (2) Shelter Plus Care; and (3) Section 8 Moderate Rehabilitation for Single Room Occupancy Dwellings for Homeless Individuals. This notice of funding availability (NOFA) contains information concerning the Continuum of Care approach, eligible applicants, eligible activities, application requirements, and application processing.

DEADLINE DATE: *Applications Delivered.* Applications are due before midnight on *July 8, 1997.*

Before and on the deadline date, and during normal business hours (up to 6:00 pm) completed applications will be accepted at the Office of Special Needs Assistance Programs (Room 7270) in Washington at the address below.

On the deadline date and after normal business hours (after 6:00 pm), hand-carried applications will be received at the South Lobby of the Department of Housing and Urban Development at the address below. HUD will treat as ineligible for consideration delivered applications that are received after that deadline.

Applications Mailed. Applications will be considered timely filed if postmarked before midnight on *July 8, 1997,* and received by HUD Headquarters within ten (10) days after that date.

Applications Sent by Overnight Delivery. Overnight delivery items will be considered timely filed if received before or on *July 8, 1997,* or upon submission of documentary evidence that they were placed in transit with the overnight delivery service by no later than *July 8, 1997.*

No facsimile (FAX). Applications may not be sent by FAX.

Copies of Applications to Field Offices. Two copies of the application must also be sent to the HUD Field Office serving the State in which the applicant's projects are located. Field office copies must be received by the application deadline as well, but a determination that an application was received on time will be made solely on receipt of the application at HUD Headquarters in Washington. All three copies may be used in reviewing the application.

ADDRESSES: For a copy of the application package and supplemental information please call the Community Connections information center at 1–800–998–9999 (voice) or 1–800–483–2209 (TTY), or contact by internet at http://www.comcon.org/ccprog.html.

The address of the Special Needs Assistance Programs Office in HUD Headquarters is: Special Needs Assistance Programs, Room 7270, Office of Community Planning and Development, Department of Housing and Urban Development, 451 Seventh Street, S.W., Washington, DC 20410, Attention: Continuum of Care Funding. Addresses of HUD Field Offices are contained in Appendix B.

ELECTRONIC SUBMISSION: This year, for the first time, you may use a special supplement to HUD's new Community Planning Software to prepare your application. The special supplement has been programmed to produce the charts and narratives that will meet both the requirements of the homelessness sections of the Consolidated Plan (Con Plan) and the identical requirements of the Continuum of Care application. The supplement will also produce the necessary project-specific information. If you choose to use the supplement to prepare your Continuum of Care application, you will simply submit the required information on 3½″ computer diskettes, together with signed application cover sheets (SF–424), all required certifications and other required documentation, by the deadline identified above. Please submit three copies, as described in the **DEADLINE DATE** section above. The supplement may be obtained at no charge by contacting the Community Connections information center by phone or internet as described in the **ADDRESSES** section above.

FOR FURTHER INFORMATION AND TECHNICAL ASSISTANCE: A video presentation providing general background that can be useful in preparing your application can be obtained for a nominal fee from the Community Connections information center. This fee may be waived in the event of financial hardship.

For answers to your questions, you have several options. You may call the HUD Field Office serving your area, at the telephone number shown in Appendix B to this NOFA. Or, you may contact the Community Connections information center at 1–800–998–9999 (voice) or 1–800–483–2209 (TTY) or by internet at: http://www.comcon.org/ccprog.html.

Prior to the application deadline, staff will be available to provide general guidance, but not guidance in actually preparing the application. HUD field office staff will also be available to help identify organizations in your community that are involved in developing the Continuum of Care system. Following conditional selection, HUD staff will be available to assist in clarifying or confirming information that is a prerequisite to the offer of a grant agreement or Annual Contributions Contract by HUD. However, between the application deadline and the announcement of conditional selections, HUD will accept no information that would improve the substantive quality of the application pertinent to the funding decision.

SUPPLEMENTARY INFORMATION:

Paperwork Reduction Act Statement

The information collection requirements contained in this notice have been submitted to the Office of Management and Budget (OMB) under the Paperwork Reduction Act of 1995 (42 U.S.C. 3501–3520), and OMB approval is pending. An agency may not conduct or sponsor, and a person is not required to respond to, a collection of information unless the collection displays a valid control number.

Promoting Comprehensive Approaches to Housing and Community Development

HUD is interested in promoting comprehensive, coordinated approaches to housing and community development. Economic development, community development, public housing revitalization, homeownership, assisted housing for special needs populations, supportive services, and welfare-to-work initiatives can work better if linked at the local level. Toward this end, the Department in recent years has developed the Consolidated Planning process designed to help communities undertake such approaches.

In this spirit, it may be helpful for applicants under this NOFA to be aware of other related HUD NOFAs that have recently been published or are expected to be published in the near future. By reviewing these NOFAs with respect to their program purposes and the eligibility of applicants and activities, applicants may be able to relate the activities proposed for funding under this NOFA to the recent and upcoming NOFAs and to the community's Consolidated Plan.

The related NOFAs the Department expects to publish in the **Federal Register** within the next few weeks include: the Family Unification NOFA, the Housing Opportunities for Persons with AIDS (HOPWA) NOFA, the Supportive Housing for the Elderly NOFA, the Designated Housing NOFA, and the NOFA for Mainstream Housing Opportunities.

To foster comprehensive, coordinated approaches by communities, the Department intends for the remainder of FY 1997 to continue to alert applicants to upcoming and recent NOFAs as each NOFA is published. In addition, a complete schedule of NOFAs to be published during the fiscal year and those already published appears under the HUD Homepage on the Internet, which can be accessed at http://www.hud.gov/nofas.html. Additional steps on NOFA coordination may be considered for FY 1998.

To help in obtaining a copy of your community's Consolidated Plan, please contact the community development office of your municipal government.

I. Substantive Description

(a) Authority

The Supportive Housing Program is authorized by title IV, subtitle C, of the Stewart B. McKinney Homeless Assistance Act (McKinney Act), as amended, 42 U.S.C. 11381. Funds made available under this NOFA for the Supportive Housing program are subject to the program regulations at 24 CFR part 583, as amended by the final rule published in the **Federal Register** on September 30, 1996 (61 FR 51174).

The Shelter Plus Care program is authorized by title IV, subtitle F, of the McKinney Act, as amended, 42 U.S.C. 11403. Funds made available under this NOFA for the Shelter Plus Care program are subject to the program regulations at 24 CFR part 582, as amended by the final rule published in the **Federal Register** on September 30, 1996 (61 FR 51168).

The Section 8 Moderate Rehabilitation Program for Single Room Occupancy Dwellings for Homeless Individuals (SRO) is authorized by section 441 of the McKinney Act, as amended, 42 U.S.C. 11401. Funds made available under this NOFA for the SRO program are subject to the program regulations at 24 CFR part 882, subpart H, as amended by the final rule published in the **Federal Register** on September 11, 1996 (61 FR 48052).

(b) Program Summaries

The chart in Appendix A summarizes key aspects of the Supportive Housing Program, the Shelter Plus Care Program, and the Section 8 Moderate Rehabilitation Program for Single Room Occupancy Dwellings for Homeless Individuals. Program descriptions are contained in the applicable regulations cited in the chart.

(c) Funding Availability

Approximately $625 million is available for this competition. Any unobligated funds from previous competitions or additional funds that may become available as a result of deobligations or recaptures from previous awards may be used in addition to 1997 appropriations to fund applications submitted in response to this NOFA.

Amounts for each of the three programs will not be specified this year. Instead, the distribution of funds among the three programs will depend on locally determined priorities and overall demand. HUD reserves the right to fund less than the full amount requested in any application to ensure the fair distribution of the funds and to ensure the purposes of these homeless programs are met.

(d) Purpose: Develop Continuum of Care Systems

The purpose of this NOFA is to fund projects that will fill gaps in locally developed Continuum of Care systems to assist homeless persons move to self-sufficiency and permanent housing. A Continuum of Care system consists of four basic components:

(1) A system of outreach and assessment for determining the needs and conditions of an individual or family who is homeless;

(2) Emergency shelters with appropriate supportive services to help ensure that homeless individuals and families receive adequate emergency shelter and referral to necessary service providers or housing finders;

(3) Transitional housing with appropriate supportive services to help those homeless individuals and families who are not prepared to make the transition to permanent housing and independent living; and

(4) Permanent housing, or permanent supportive housing, to help meet the long-term needs of homeless individuals and families.

A Continuum of Care system is developed through a community-wide or region-wide process involving nonprofit organizations (including those representing persons with disabilities), government agencies, other homeless providers, housing developers and service providers, private foundations, neighborhood groups, and homeless or formerly homeless persons. It should address the specific needs of each homeless subpopulation: the jobless, veterans, homeless persons with serious mental illnesses, persons with substance abuse issues, persons with HIV/AIDS, persons with multiple diagnoses, victims of domestic violence, runaway youth, and any others.

The community process used in developing a Continuum of Care system must include interested veteran service organizations, particularly veteran service organizations with specific experience in serving homeless veterans, in order to ensure that the Continuum of Care system addresses the needs of homeless veterans.

High scores under the Continuum of Care scoring criteria will be assigned to applications that demonstrate the achievement of two basic goals:

- Have maximum participation by non-profit providers of housing and services; homeless and formerly homeless persons; state and local governments and agencies; veteran service organizations; organizations representing persons with disabilities; the private sector; housing developers; foundations and other community organizations.
- Create, maintain and build upon a community-wide inventory of housing and services for homeless families and individuals; identify the full spectrum of needs of homeless families and individuals; and coordinate efforts to

obtain resources, particularly resources sought through this NOFA, to fill gaps between the current inventory and existing needs.

In deciding the geographic area to be covered by a Continuum of Care strategy, applicants should be aware that the single most important factor in receiving funding under this competition will be the strength of the Continuum of Care strategy when measured against the Continuum of Care criteria described in this NOFA. In determining what jurisdictions to include in a Continuum of Care strategy area, the applicant should include those jurisdictions that are involved in the development and implementation of the Continuum of Care strategy.

Applicants should also be aware that the larger the area included in a Continuum of Care strategy area, the larger the pro rata need share that will be allocated to the strategy area (as described in section III(a)(4) of this NOFA). However, it would be a mistake to include jurisdictions that are not fully involved in the development and implementation of the Continuum of Care strategy since this would adversely affect the Continuum of Care score. Because most rural counties have extremely small pro rata need shares, they are strongly encouraged to consider working with larger groups of contiguous counties to develop a region-wide or multi-county Continuum of Care strategy covering the combined service areas of these counties. This will be taken into account during the HUD review.

Since the basic concept of a Continuum of Care strategy is the creation of a single, coordinated, inclusive homeless assistance system for an area, the areas covered by Continuum of Care strategies should not overlap. If there are cases where the Continuum of Care strategies geographically overlap to the extent that they are essentially competing with each other, projects in the application/Continuum of Care that receives the highest score out of the possible 60 points for Continuum of Care will be eligible for up to 40 points under Need. Projects in the competing applications with the less effective Continuum of Care strategies will be eligible for only 10 points under Need. In no case will the same geography be used more than one time in assigning Need points. The local HUD field office can help applicants determine if any of the area covered by one Continuum of Care strategy is also likely to be claimed under another Continuum of Care in this competition.

(e) Prioritizing

Priority decisions are best made through a locally-driven process and are key to the ultimate goal of reducing homelessness. As was done in 1996, this year's application (1997) instructs that all projects proposed for funding under this NOFA be listed in priority order from the highest priority to the lowest. This priority order will mean, for example, that if funds are only available to finance 8 of 10 proposed projects, then funding will be awarded to the first eight projects listed. HUD expects nonprofit organizations to be given a fair role in establishing these priorities.

This priority list will be used in awarding up to 40 points per project under the ''Need'' scoring criteria. Higher priority projects will receive more points under Need than lower priority projects. If projects are not prioritized in the application, each project will receive the lowest score for Need.

Project renewals. In the past, HUD has taken a portion of the funds available under the current appropriation to fund the renewal of expiring Supportive Housing grants, Supportive Housing Demonstration Program grants, and SAFAH grants. However, this policy results in less funds available for the competition and places the decision on what is needed in a community in the hands of HUD officials rather than communities. Consistent with the Continuum of Care approach, the need for the continuation of previously funded projects should be considered in the local needs analysis and a decision should be made locally on the priority to assign to the continuation of a project. Therefore, HUD funds needed to continue expiring Supportive Housing grants, Supportive Housing Demonstration Program grants, SAFAH grants, and Shelter Plus Care grants, as described below, will only be available through the competitive process described in this NOFA.

For this 1997 competition, communities need to pay particular attention to the funding needs of current McKinney homeless assistance projects which will have insufficient funds to continue operating throughout 1998 if additional funds are not awarded to them in this competition. To the extent a locality desires to have such projects renewed, it should give them the top priorities on the priority projects listing in the application. (Communities should not request additional funding in this competition for those projects that have sufficient remaining funds to continue operating into 1999.) For the renewal of a Supportive Housing project, you may request for each of three (3) years up to 50 percent of the amount of leasing and operating costs in the final year of the expiring grant's term and up to 50 percent of the amount of HUD grant funds for supportive services in the final year of the expiring grant's term. For the renewal of a Supportive Housing Demonstration Program project or SAFAH project which is at the 50 percent amount in its final year, you may request up to the same amount as in the final year for each of three (3) years. For the renewal of a Shelter Plus Care project, you may request up to the amount determined by multiplying the number of units under lease at the time of application for renewal funding under this NOFA by the applicable current Fair Market Rent(s) by 60 months. This NOFA is not applicable to the renewal of funding under the SRO program.

II. Application Requirements

The application requires a description of the Continuum of Care system and proposed project(s). It also contains certifications that the applicant will comply with fair housing and civil rights requirements, program regulations, and other Federal requirements, and (where applicable) that the proposed activities are consistent with the HUD-approved Consolidated Plan of the applicable State or unit of general local government, including the Analysis of Impediments to Fair Housing and the Action Plan to address these impediments. Projects funded under this NOFA shall operate in a fashion that does not deprive any individual of any right protected by the Fair Housing Act (42 U.S.C. 3601–19), Section 504 of the Rehabilitation Act of 1973 (29 U.S.C. 794) or the Americans with Disabilities Act of 1990 (42 U.S.C. 12101 *et. seq.*)

There are three options for submitting an application under this NOFA.

One: A ''Consolidated Application'' is submitted when a jurisdiction (or a consortium of jurisdictions) submits a single application encompassing a Continuum of Care strategy and containing all the projects within that strategy for which funding is being requested. Individual projects are contained within the one consolidated application. Grant funding may go to one entity which then administers all funded projects submitted in the application, or under this option, grant funding may go to all or any of the projects individually. Your application will specify the grantee for each project.

Two: ''Associated Applications'' are submitted when applicants plan and organize a single Continuum of Care

strategy which is adopted by project sponsors or operators who choose to submit separate applications for projects while including the identical Continuum of Care strategy. In this case, project funding would go to each successful applicant individually and each would be responsible to HUD for administering its separate grant.

Three: A ''Solo Application'' is submitted when an applicant applies for a project exclusive of participation in any community-wide or region-wide Continuum of Care development process.

Options one and two are not substantively different and will be considered equally competitive. Applicants are advised that projects that are not a part of a Continuum of Care strategy will receive few, if any, points under the Continuum of Care rating criteria.

III. Application Selection Process

(a) Review, Rating and Conditional Selection

The Department will use the same review, rating, and conditional selection process for all three programs (S+C, SRO, and SHP). To review and rate applications, the Department may establish panels including persons not currently employed by HUD to obtain certain expertise and outside points of view, including views from other Federal agencies. Two types of reviews will be conducted. Paragraphs (1) and (2) below describe threshold reviews and paragraphs (3) and (4) describe criteria—Continuum of Care and Need—that will be used to assign points. Up to 100 points will be assigned using these criteria.

(1) *Applicant and sponsor eligibility and capacity.* Applicant and project sponsor capacity will be reviewed to ensure the following eligibility and capacity standards are met. If HUD determines these standards are not met, the project will be rejected from the competition.

- The applicant must be eligible to apply for the specific program;
- The applicant must demonstrate that there is sufficient knowledge and experience to carry out the project(s). With respect to each proposed project, this means that in addition to knowledge of and experience with homelessness in general, the organization carrying out the project, its employees, or its partners, must have the necessary experience and knowledge to carry out the specific activities proposed, such as housing development, housing management, and service delivery;
- If the applicant or project sponsor is a current or past recipient of assistance under a HUD McKinney Act program or the HUD Single Family Property Disposition Homeless Program, there must be no project or construction delay, HUD finding, or outstanding audit that HUD deems serious regarding the administration of HUD McKinney Act programs or the HUD Single Family Property Disposition Homeless Program; and
- The applicant and project sponsors must be in compliance with applicable civil rights laws and Executive Orders.

The Department will use the following standards to assess compliance with civil rights laws at the threshold review. In making this assessment, the Department shall review appropriate records maintained by the Office of Fair Housing and Equal Opportunity, e.g., records of monitoring, audit, or compliance review findings, complaint determinations, compliance agreements, etc. If the review reveals the existence of any of the following, the application will be rejected.

(1) There is pending civil rights suit against the sponsor instituted by the Department of Justice.

(2) There is an outstanding finding of noncompliance with civil rights statutes, Executive Orders or regulations as result of formal administrative proceedings, unless the applicant is operating under a HUD-approved compliance agreement designed to correct the area of noncompliance, or is currently negotiating such an agreement with the Department.

(3) There is an unresolved Secretarial charge of discrimination issued under Section 810(g) of the Fair Housing Act, as implemented by 24 CFR 103.400.

(4) There has been adjudication of a civil rights violation in a civil action brought against it by a private individual, unless the applicant is operating in compliance with a court order designed to correct the area of noncompliance or the applicant has discharged any responsibility arising from such litigation.

(5) There has been a deferral of the processing of applications from the sponsor imposed by HUD under Title VI of the Civil Rights Act of 1964, the Attorney General's Guidelines (28 CFR 50.3) or the HUD Title VI regulations (24 CFR 1.8) and procedures, or under Section 504 of the Rehabilitation Act of 1973 and the HUD Section 504 regulations (24 CFR 8.57).

(2) *Project eligibility and quality.* Each project will be reviewed to determine if it meets the following eligibility and threshold quality standards. If HUD determines the following standards are not met by a specific project or activity, the project or activity will be rejected from the competition.

- The population to be served must meet the eligibility requirements of the specific program, as described in the application instructions;
- The activity(ies) for which assistance is requested must be eligible under the specific program, as described in the program regulations;
- The housing and services proposed must be appropriate to the needs of the persons to be served. HUD may find a project to be inappropriate if:

—The type and scale of the housing or services clearly does not fit the needs of the proposed participants (e.g., housing homeless families with children in the same space as homeless individuals, or separating members of the same family, without an acceptable rationale provided);
—Participant safety is not addressed;
—Participants will have little or no involvement in decision-making and project operations
—The housing or services are clearly designed to principally meet emergency needs rather than helping participants achieve self-sufficiency;
—Transportation and community amenities are not available and accessible; or
—Housing accessibility in accordance with applicable laws for persons with disabilities is not addressed;

- The project must be cost-effective in HUD's opinion, including costs associated with construction, operations, and administration, with such costs not deviating substantially from the norm in that locale for the type of structure or kind of activity.
- Supportive services only projects, and all others, must show how participants will be helped to access permanent housing and achieve self-sufficiency.
- For the Section 8 SRO program, at least 25 percent of the units to be assisted at any one site must be vacant at the time of application;
- For those projects proposed under the SHP innovative category: Whether or not a project is considered innovative will be determined on the basis that the particular approach proposed is new to the area, is a sensible model for others, and can be replicated; and
- HUD will also find one or more of these standards not to have been met if there is insufficient information provided in the application on which to make a determination.

(3) *Continuum of Care.* Up to 60 points will be awarded as follows:

(i) Process and Strategy. Up to 30 points will be awarded based on the

extent to which the application demonstrates:

- The existence of a quality and inclusive community process, including organizational structure(s), for developing and implementing a Continuum of Care strategy which includes nonprofit organizations (such as veterans service organizations, other organizations representing persons with disabilities, and other groups serving homeless persons), State and local governmental agencies, other homeless providers, housing developers and service providers, private foundations, local businesses and the banking community, neighborhood groups, and homeless or formerly homeless persons, as articulated in section I(d) of this NOFA; and
- That a quality and comprehensive strategy has been developed which addresses the components of a Continuum of Care system (i.e., outreach, intake, and assessment; emergency shelter; transitional housing; permanent and permanent supportive housing) and that strategy has been designed to serve all homeless subpopulations in the community (e.g., seriously mentally ill, persons with multiple diagnoses, veterans), including those persons living in emergency shelters, supportive housing for homeless persons, or in places not designed for, or ordinarily used as, a regular sleeping accommodation for human beings. For S+C, the strategy receives more points based on the extent to which S+C activities will serve homeless persons who are seriously mentally ill, have chronic alcohol and/or substance abuse issues, or have AIDS and related diseases.

(ii) Gaps and Priorities. Up to 20 points will be awarded based on the extent to which the application:

- Establishes the relative priority of homeless needs identified in the Continuum of Care strategy; and
- Proposes projects that are consistent with the priority analysis described in the Continuum of Care strategy.

(iii) Supplemental Resources. Up to 10 points will be awarded based on the extent to which the application demonstrates leveraging of funds requested under this NOFA with other resources, including private, other public, and mainstream services and housing programs.

(iv) Court-ordered consideration. Due to an order of the U.S. District Court for the Northern District of Texas, Dallas Division, with respect to any application by the City of Dallas, Texas, for HUD funds, HUD shall consider the extent to which the Continuum of Care strategy for the Dallas area will be used to eradicate the vestiges of segregation in the Dallas Housing Authority's low income housing programs. The City of Dallas should address the effect, if any, that vestiges of racial segregation in Dallas Housing Authority's low income housing programs have on potential participants in the programs covered by this NOFA, and identify proposed actions for remedying those vestiges. HUD may add up to 2 points to the Continuum of Care score based on this consideration.

(4) *Need.* Up to 40 points will be awarded for need. There is a three-step approach to determining the need scores to be awarded to projects:

(i) Determining relative need: To determine the homeless assistance need of a particular jurisdiction, HUD will use nationally available data, including the following factors as used in the Emergency Shelter Grants program: data on poverty, housing overcrowding, population, age of housing, and growth lag. Applying those criteria to a particular jurisdiction provides an estimate of the relative need index for that jurisdiction compared to other jurisdictions applying for assistance under this NOFA.

(ii) Applying relative need: That relative need index is then applied to the total amount of funding estimated to be available under this NOFA to determine a jurisdiction's pro rata need. HUD reserves the right to adjust pro rata need if necessary to address the issue of project renewals.

(iii) Awarding need points to projects: Once the pro rata need is established, it is applied against the priority project list in the application. Starting from the highest priority project, HUD proceeds down the list to include those projects whose total funding equals that jurisdiction's pro rata need. Those priority projects which fall within that pro rata need each receive the full 40 points for need. Thereafter, HUD proceeds further down the priority project list until two (2) times the pro rata need is reached and each of those projects receive 20 points. Remaining projects each receive 10 points.

If an application does not prioritize projects, each project will receive 10 points for Need.

In the case of competing applications from a single jurisdiction or service area, projects in the application that received the highest score out of the possible 60 points for Continuum of Care are eligible for up to 40 points under Need. Projects in the competing applications with less effective Continuum of Care strategies are eligible for only 10 points under Need.

(5) *Ranking.* The score for Continuum of Care will be added to the Need score in order to obtain a total score for each project. The projects will then be ranked from highest to lowest according to the total combined score. A bonus of 3 points will be added in determining the final score of any project that will be located within the boundaries of a federal Empowerment Zone (EZ) or Enterprise Community (EC) if priority placement will be given by the project to homeless persons living on the streets or in shelters within the EZ or EC, or whose last known address was within the EZ or EC. A bonus of 2 points will be added in determining the final score of any project that will make use of surplus military buildings or properties located on a military base that is covered by the provisions of the Base Closure Community Redevelopment and Homeless Assistance Act of 1994.

(6) *Conditional selection.* Whether a project is conditionally selected, as described in section IV below, will depend on its overall ranking compared to others, except that HUD reserves the right to select lower rated projects if necessary to achieve geographic diversity.

HUD also reserves the right to break ties among projects by determining which project will best achieve the purposes described in the preceding sentence, or to fund a project at less than the full amount requested.

In the event of an error that, when corrected, would result in selection of an otherwise eligible project during the funding round under this NOFA, one remedy may be that HUD selects that project to the extent funds are available.

(7) *Additional selection considerations.* HUD will also apply the limitations on funding described below in making conditional selections.

In accordance with section 429 of the McKinney Act, as amended, HUD will award Supportive Housing funds as follows: not less than 25 percent for projects that primarily serve homeless families with children; not less than 25 percent for projects that primarily serve homeless persons with disabilities; and not less than 10 percent for supportive services not provided in conjunction with supportive housing. After projects are rated and ranked, based on the criteria described above, HUD will determine if the conditionally selected projects achieve these minimum percentages. If not, HUD will skip higher-ranked projects in a category for which the minimum percent has been achieved in order to achieve the minimum percent for another category. If there are an insufficient number of conditionally selected projects in a

category to achieve its minimum percent, the unused balance will be used for the next highest-ranked approvable Supportive Housing project.

In accordance with section 463(a) of the McKinney Act, as amended by the 1992 Act, at least 10 percent of Shelter Plus Care funds will be awarded for each of the four components of the program: Tenant-based Rental Assistance; Sponsor-based Rental Assistance; Project-based Rental Assistance; and Section 8 Moderate Rehabilitation of Single Room Occupancy Dwellings for Homeless Individuals (provided there are sufficient numbers of approvable projects to achieve these percentages). After projects are rated and ranked, based on the criteria described below, HUD will determine if the conditionally selected projects achieve these minimum percentages. If necessary, HUD will skip higher-ranked projects for a component for which the minimum percent has been achieved in order to achieve the minimum percent for another component. If there are an insufficient number of approvable projects in a component to achieve its minimum percent, the unused balance will be used for the next highest-ranked approvable Shelter Plus Care project.

In accordance with section 455(b) of the McKinney Act, no more than 10 percent of the assistance made available for Shelter Plus Care in any fiscal year may be used for programs located within any one unit of general local government.

In accordance with section 441(c) of the McKinney Act, no city or urban county may have Section 8 SRO projects receiving a total of more than 10 percent of the assistance made available under this program.

This year's NOFA does not make available specific amounts for the three programs covered by the NOFA. Instead, distribution is demand-driven. However, potential applicants need to be able to plan for their project proposals. Therefore, HUD is defining the 10 percent availability this fiscal year as $10 million for Shelter Plus Care and $10 million for Section 8 SRO. The $10 million number is based on past experience of the distribution of the total funds made available for HUD homeless assistance programs. However, if the amount awarded under either of these two programs exceeds $100 million, then the amount awarded to any one unit of general local government (for purposes of the Shelter Plus Care program) or city or urban county (for the purposes of the SRO program) could be up to 10 percent of the actual total amount awarded for that program.

Lastly, HUD reserves the right to reduce the amount of a grant if necessary to ensure that no more than 10 percent of assistance made available under this NOFA will be awarded for projects located within any one unit of general local government or within the geographic area covered by any one Continuum of Care. If HUD exercises a right it has reserved under this NOFA, that right will be exercised uniformly across all applications received in response to this NOFA.

(b) Clarification of Application Information

In accordance with the provisions of 24 CFR part 4, subpart B, HUD may contact an applicant to seek clarification of an item in the application, or to request additional or missing information, but the clarification or the request for additional or missing information shall not relate to items that would improve the substantive quality of the application pertinent to the funding decision.

IV. Funding Award Process

HUD will notify conditionally selected applicants in writing. As necessary, HUD will subsequently request them to submit additional project information, which may include documentation to show the project is financially feasible; documentation of firm commitments for cash match; documentation showing site control; information necessary for HUD to perform an environmental review, where applicable; and such other documentation as specified by HUD in writing to the applicant, that confirms or clarifies information provided in the application. SRO and S+C/SRO applicants will be notified of the date of the two month deadline for submission of such information; other S+C applicants and all SHP applicants will be notified of the date of the one month deadline for submission of such information. If an applicant is unable to meet any conditions for fund award within the specified timeframe, HUD reserves the right not to award funds to the applicant, but instead to either: use them to select the next highest ranked application(s) from the original competition for which there are sufficient funds available; or add them to funds available for the next competition for the applicable program.

V. Program Limitations

(a) *SRO program*. Applicants need to be aware of the following limitations that apply to the Section 8 SRO program:

- Under section 8(e)(2) of the United States Housing Act of 1937, no single project may contain more than 100 units;
- Under 24 CFR 882.802, applicants that are private nonprofit organizations must subcontract with a Public Housing Authority to administer the SRO assistance;
- Under section 8(e)(2) of the United States Housing Act of 1937 and 24 CFR 882.802, rehabilitation must involve a minimum expenditure of $3,000 for a unit, including its prorated share of work to be accomplished on common areas or systems, to upgrade conditions to comply with the Housing Quality Standards.
- Under section 441(e) of the McKinney Act and 24 CFR 882.805(g)(1), HUD publishes the SRO per unit rehabilitation cost limit each year to take into account changes in construction costs. This cost limitation applies to rehabilitation that is compensated for in a Housing Assistance Payments Contract. For purposes of Fiscal Year 1997 funding, the cost limitation is raised from $16,500 to $16,900 per unit to take into account increases in construction costs during the past 12-month period.

(b) *Shelter Plus Care/Section 8 SRO Component*. With regard to the SRO component of the Shelter Plus Care program, applicant States, units of general local government and Indian tribes must subcontract with a Public Housing Authority to administer the Shelter Plus Care assistance. Also with regard to this component, no single project may contain more than 100 units.

VI. Timeliness Standards

Applicants are expected to initiate their approved projects promptly. If implementation difficulties occur, applicants need to be aware of the following timeliness standards:

(a) *Supportive Housing Program*.

- HUD will deobligate SHP funds if site control has not been demonstrated within one (1) year after initial notification of the grant award, as provided in 24 CFR 583.320(a), subject to the exceptions noted in that regulation.
- Except where HUD finds that delay was due to factors beyond the control of the grantee, HUD will deobligate SHP funds if the grantee does not meet the following additional timeliness standards:

—Construction activities must begin within eighteen (18) months after initial notification of the grant award

and be completed within thirty-six (36) months after that notification.

—For activities that cannot begin until construction activities are completed, such as supportive service or operating activities that will be conducted within the building being rehabilitated or newly constructed, these activities must begin within three (3) months after the construction is completed.

—For all activities that may proceed independent of construction activities, these activities must begin within twelve (12) months after initial notification of the grant award.

(b) *Shelter Plus Care Program Components Except SRO Component.* Except where HUD finds that delay was due to factors beyond the control of the grantee, HUD will deobligate S+C funds if the grantee does not meet the following timeliness standards:

• For Tenant-based Rental Assistance, for Sponsor-based Rental Assistance, and for Project-based Rental Assistance without rehabilitation, the rental assistance must begin within twelve (12) months of the initial announcement of the grant award.

• For Project-based Rental Assistance with rehabilitation, the rehabilitation must be completed within twelve (12) months of initial notification of the grant award.

(c) *SRO Program and SRO Component of the Shelter Plus Care Program.*

For projects carried out under the SRO program and the SRO component of the S+C program, the rehabilitation work must be completed and the Housing Assistance Payments contract executed within twelve (12) months of execution of the Annual Contributions Contract. HUD may reduce the number of units or the amount of the annual contribution commitment if, in the determination of HUD, the Public Housing Authority fails to demonstrate a good faith effort to adhere to this schedule.

VII. Linking Supportive Housing Programs and AmeriCorps

Applicants for the Supportive Housing Program are encouraged to link their proposed projects with AmeriCorps, a national service program engaging thousands of Americans on a full- or part-time basis to help communities address their toughest challenges, while earning support for college, graduate school, or job training. For information about AmeriCorps SHP partnerships, call the Corporation for National Service at (202) 606–5000 extension 486.

VIII. Other Matters

Performance Measures. The grant agreement or Annual Contributions Contract to be executed by HUD and the award recipient will contain performance measures.

Prohibition Against Lobbying Activities. The use of funds awarded under this NOFA is subject to the disclosure requirements and prohibitions of Section 319 of the Department of the Interior and Related Agencies Appropriations Act for Fiscal Year 1990 (31 U.S.C. 1352) (the ''Byrd Amendment'') and the implementing regulations at 24 CFR part 87. These authorities prohibit recipients of Federal contracts, grants, or loans from using appropriated funds for lobbying the Executive or Legislative branches of the Federal government in connection with a specific contract, grant, or loan. The prohibition also covers the awarding of contracts, grants, cooperative agreements, or loans unless the recipient has made an acceptable certification regarding lobbying. Under 24 CFR part 87, applicants, recipients and sub-recipients of assistance exceeding $100,000 must certify that no Federal funds have been or will be spent on lobbying activities in connection with the assistance.

Applicants for funding under this NOFA are subject to the provisions of Section 319 of the Department of the Interior and Related Agencies Appropriation Act for Fiscal Year 1991, 31 U.S.C. 1352 (the Byrd Amendment), which prohibits applicants from using appropriated funds for lobbying the Executive or Legislative Branches of the Federal Government in connection with a specific contract, grant, or loan. Applicants are required to certify, using the certification found at Appendix A to 24 CFR part 87, that they will not, and have not, used appropriated funds for any prohibited lobbying activities. In addition, applicants must disclose, using Standard Form LLL, ''Disclosure of Lobbying Activities,'' any funds, other than federally appropriated funds, that will be or have been used to influence federal employees, members of Congress, and congressional staff regarding specific grants or contracts.

Environmental Impact. This NOFA provides funding under, and does not alter the environmental requirements of, regulations in 24 CFR parts 582, 583 and 882, subpart H. Accordingly, under 24 CFR 50.19(c)(5), this NOFA is categorically excluded from environmental review under the National Environmental Policy Act of 1969 (42 U.S.C. 4321). Conditional selection of projects under this NOFA is subject to the environmental review requirements under 24 CFR 582.230, 583.230 and 882.804(c), as applicable.

Executive Order 12606, The Family. The General Counsel, as the Designated Official under Executive Order 12606, *The Family,* has determined that the policies announced in this Notice would have a significant impact on the formation, maintenance, and general well-being of families, but since this impact would be beneficial, no further analysis under the Order is necessary.

Executive Order 12612, Federalism. The General Counsel has determined, as the Designated Official for HUD under section 6(a) of Executive Order 12612, *Federalism,* that the policies contained in this Notice will not have federalism implications and, thus, are not subject to review under the Order. The promotion of activities and policies to end homelessness is a recognized goal of general benefit without direct implications on the relationship between the national government and the states or on the distribution of power and responsibilities among various levels of government.

Drug-Free Workplace Certification. The Drug-Free Workplace Act of 1988 requires grantees of Federal agencies to certify that they will provide drug-free workplaces. Thus, each applicant must certify that it will comply with drug-free workplace requirements in accordance with 24 CFR part 24, subpart F.

Accountability in the Provision of HUD Assistance. Section 102 of the Department of Housing and Urban Development Reform Act of 1989 (HUD Reform Act) and the final rule codified at 24 CFR part 4, subpart A, published on April 1, 1996 (61 FR 1448), contain a number of provisions that are designed to ensure greater accountability and integrity in the provision of certain types of assistance administered by HUD. On January 14, 1992, HUD published, at 57 FR 1942, a notice that also provides information on the implementation of section 102. The documentation, public access, and disclosure requirements of section 102 are applicable to assistance awarded under this NOFA as follows:

Documentation and public access requirements. HUD will ensure that documentation and other information regarding each application submitted pursuant to this NOFA are sufficient to indicate the basis upon which assistance was provided or denied. This material, including any letters of support, will be made available for public inspection for a five-year period beginning not less than 30 days after the award of the assistance. Material will be made available in accordance with the

Freedom of Information Act (5 U.S.C. 552) and HUD's implementing regulations at 24 CFR part 15. In addition, HUD will include the recipients of assistance pursuant to this NOFA in its **Federal Register** notice of all recipients of HUD assistance awarded on a competitive basis.

Disclosures. HUD will make available to the public for five years all applicant disclosure reports (HUD Form 2880) submitted in connection with this NOFA. Update reports (also Form 2880) will be made available along with the applicant disclosure reports, but in no case for a period less than three years. All reports—both applicant disclosures and updates—will be made available in accordance with the Freedom of Information Act (5 U.S.C. 552) and HUD's implementing regulations at 24 CFR part 15.

Section 103 HUD Reform Act. Section 103 of the Department of Housing and Urban Development Reform Act of 1989, and HUD's implementing regulation codified at subpart B of 24 CFR part 4, applies to the funding competition announced today. These requirements continue to apply until the announcement of the selection of successful applicants. HUD employees involved in the review of applications and in the making of funding decisions are limited by section 103 from providing advance information to any person (other than an authorized employee of HUD) concerning funding decisions, or from otherwise giving any applicant an unfair competitive advantage. Persons who apply for assistance in this competition should confine their inquiries to the subject areas permitted under section 103 and subpart B of 24 CFR part 4.

Applicants or employees who have HUD Reform Act or other ethics related questions should contact the HUD's Ethics Law Division (202) 708–3815. (This is not a toll-free number.)

Authority: 42 U.S.C. 11403 note; 42 U.S.C. 11389; 42 U.S.C. 1437a, 1437c, and 1437f; 42 U.S.C. 3535(d); 24 CFR parts 582, 583, and 882.

Dated: April 3, 1997.

Jacquie Lawing,

General Deputy Assistant Secretary for Community Planning and Development.

BILLING CODE 4210–29–P

APPENDIX A

ELEMENT	SUPPORTIVE HOUSING	SHELTER PLUS CARE	SECTION 8 SRO
AUTHORIZING LEGISLATION	Subtitle C of Title IV of the Stewart B. McKinney Homeless Assistance Act, as amended	Subtitle F of Title IV of the Stewart B. McKinney Homeless Assistance Act, as amended	Section 441 of the Stewart B. McKinney Homeless Assistance Act, as amended
IMPLEMENTING REGULATIONS	24 CFR part 583, as amended September 30, 1996	24 CFR part 582, as amended September 30, 1996	24 CFR part 882, subpart H, as amended September 11, 1996
ELIGIBLE APPLICANT(S)	• States • Units of general local government • Public housing agencies (PHAs) • Tribes • Private nonprofit organizations • CMHCs that are public nonprofit organizations	• States • Units of general local government • Tribes • PHAs	• PHAs • Private nonprofit organizations
ELIGIBLE COMPONENTS	• Transitional housing • Permanent housing for disabled persons only • Supportive services not in conjunction with supportive housing • Safe Havens • Innovative supportive housing	• Tenant-based • Sponsor-based • Project-based • SRO-based	• SRO housing
ELIGIBLE ACTIVITIES See footnotes 1 and 2	• Acquisition • Rehabilitation • New construction • Leasing • Operating costs • Supportive services	• Rental assistance	• Rental Assistance
ELIGIBLE POPULATIONS See footnote 2	• Homeless persons	• Homeless disabled individuals • Homeless disabled individuals and their families	• Homeless individuals • Section 8 eligible current occupants

POPULATIONS GIVEN SPECIAL CONSIDERATION	• Homeless persons with disabilities • Homeless families with children	Homeless persons who: • are seriously mentally ill • have chronic problems with alcohol and/or drugs • have AIDS and related diseases	N/A
INITIAL TERM OF ASSISTANCE	3 years	5 years: TRA, SRA, and PRA if no rehab 10 years: SRO and PRA with rehab	10 years

Footnote 1: Homeless prevention activities are statutorily ineligible under these programs.

Footnote 2: Persons at risk of homelessness are statutorily ineligible for assistance under these programs.

Footnote 3: Acquisition, construction, rehabilitation, leasing and operating costs for emergency shelters are statutorily ineligible for assistance under these programs.

APPENDIX B

LIST OF HUD FIELD OFFICES

Telephone numbers for Telecommunications Devices for the Deaf (TTY machines) are listed for CPD Directors in HUD Field Offices; all HUD numbers, including those noted *, may be reached via TTY by dialing the Federal Information Relay Service on 1-800-877-TDDY or (1-800-877-8339).

ALABAMA — William H. Dirl, Beacon Ridge Tower, 600 Beacon Pkwy. West, Suite 300, Birmingham, AL 35209-3144; (205) 290-7645; TTY (205) 290-7624.

ALASKA — Colleen Bickford, 949 E. 36th Avenue, Suite 401, Anchorage, AK 99508-4399; (907) 271-4684; TTY (907) 271-4328.

ARIZONA — Martin H. Mitchell, Two Arizona Center, Suite 1600, 400 N. 5th St., Phoenix, AZ 85004; (602) 379-4754; TTY (602) 379-4461.

ARKANSAS — Billy M. Parsley, TCBY Tower, 425 West Capitol Ave., Suite 900, Little Rock, AR 72201-3488; (501) 324-6375; TTY (501) 324-5931.

CALIFORNIA — (Southern) Herbert L. Roberts, 611 West Sixth St., Suite 800, Los Angeles, CA 90017-3127; (213) 894-8026; TTY (213) 894-8133.

(Northern) Steve Sachs, 450 Golden Gate Ave., P.O. Box 36003, San Francisco, CA 94102-3448; (415) 436-6597; TTY (415) 436-6594.

COLORADO — Guadalupe M. Herrera, First Interstate Tower North, 633 17th St., Denver, CO 80202-3607; (303) 672-5414; TTY (303) 672-5248.

CONNECTICUT — Mary Ellen Morgan, 330 Main St., Hartford, CT 06106-1866; (860) 240-4508; TTY (860) 240-4665.

DELAWARE — Joyce Gaskins, Wanamaker Bldg., 100 Penn Square East, Philadelphia, PA 19107; (215) 656-0624; TTY (215) 656-3452.

DISTRICT OF COLUMBIA (and MD and VA suburbs) — James H. McDaniel, 820 First St., NE, Washington, DC 20002; (202) 275-0994; TTY (202) 275-0772.

FLORIDA — (Northern) James N. Nichol, 301 West Bay St., Suite 2200, Jacksonville, FL 32202-5121; (904) 232-3587; TTY (904) 232-1241.

(Miami-So. Dade) Angelo Castillo, Gables Tower 1, 1320 South Dixie Hwy., Coral Gables, FL 33146-2911; (305) 662-4570; TTY (305) 662-4511.

GEORGIA — John L. Perry, Russell Fed. Bldg., Room 270, 75 Spring St., SW, Atlanta, GA 30303-3388; (404) 331-5139; TTY (404) 730-2654.

HAWAII (and Pacific) — Patty A. Nicholas, 7 Waterfront Plaza, Suite 500, 500 Ala Moana Blvd., Honolulu, HI 96813-4918; (808) 522-8180 x264; TTY (808) 522-8193.

IDAHO — John G. Bonham, 400 S.W. Sixth Ave., Suite 700, Portland, OR 97204-1632 (503) 326-7012; TTY * via 1-800-877-8339.

ILLINOIS — James Barnes, 77 W. Jackson Blvd., Chicago, IL 60604-3507; (312) 353-1696; TTY (312) 353-5944.

INDIANA — Robert F. Poffenberger, 151 N. Delaware St., Indianapolis, IN 46204-2526; (317) 226-5169; TTY * via 1-800-877-8339.

IOWA — Gregory A. Bevirt, Executive Tower Centre, 10909 Mill Valley Road, Omaha, NE 68154-3955; (402) 492-3144; TTY (402) 492-3183.

KANSAS	William Rotert, Gateway Towers 2, 400 State Ave., Kansas City, KS 66101-2406; (913) 551-5485; TTY (913) 551-6972.
KENTUCKY	Ben Cook, P.O. Box 1044, 601 W. Broadway, Louisville, KY 40201-1044; (502) 582-6141; TTY 1-800-648-6056.
LOUISIANA	Gregory J. Hamilton, 501 Magazine St., New Orleans, LA 70130; (504) 589-7212; TTY (504) 589-7237.
MAINE	David Lafond, Norris Cotton Fed. Bldg., 275 Chestnut St., Manchester, NH 03101-2487; (603) 666-7640; TTY (603) 666-7518.
MARYLAND	Joseph J. O'Connor, Acting Director, 10 South Howard Street, 5th Floor, Baltimore, MD 21202-0000; (410) 962-2520 x3071; TTY (410) 962-0106.
MASSACHUSETTS	Robert L. Paquin, Thomas P. O'Neill, Jr., Fed. Bldg., 10 Causeway St., Boston, MA 02222-1092; (617) 565-5342; TTY (617) 565-5453.
MICHIGAN	Richard Paul, Patrick McNamara Bldg., 477 Michigan Ave., Detroit, MI 48226-2592; (313) 226-4343; TTY * via 1-800-877-8339.
MINNESOTA	Shawn Huckleby, 220 2nd St. South, Minneapolis, MN 55401-2195; (612) 370-3019; TTY (612) 370-3185.
MISSISSIPPI	Jeanie E. Smith, Dr. A. H. McCoy Fed. Bldg., 100 W. Capitol St., Room 910, Jackson, MS 39269-1096; (601) 965-4765; TTY (601) 965-4171.
MISSOURI	(Eastern) James A. Cunningham, 1222 Spruce St., St. Louis, MO 63103-2836; (314) 539-6524; TTY (314) 539-6331.
	(Western) William Rotert, Gateway Towers 2, 400 State Ave., Kansas City, KS 66101-2406; (913) 551-5485; TTY (913) 551-6972.
MONTANA	Guadalupe Herrera, First Interstate Tower North, 633 17th St., Denver, CO 80202-3607; (303) 672-5414; TTY (303) 672-5248.
NEBRASKA	Gregory A. Bevirt, Executive Tower Centre, 10909 Mill Valley Road, Omaha, NE 68154-3955; (402) 492-3144; TTY (402) 492-3183.
NEVADA	(Las Vegas, Clark Cnty) Martin H. Mitchell, Two Arizona Center, Suite 1600, 400 N. 5th St., Phoenix, AZ 85004; (602) 379-4754; TTY (602) 379-4461.
	(Remainder of State) Steve Sachs, 450 Golden Gate Ave., P.O. Box 36003, San Francisco, CA 94102-3448; (415) 436-6597; TTY (415) 436-6594.
NEW HAMPSHIRE	David J. Lafond, Norris Cotton Fed. Bldg., 275 Chestnut St., Manchester, NH 03101-2487; (603) 666-7640; TTY (603) 666-7518.
NEW JERSEY	Kathleen Naymola, Acting Director, 1 Newark Center, Newark, NJ 07102; (201) 622-7900x3300; TTY (201) 645-3298.
NEW MEXICO	Frank Padilla, 625 Truman St. N.E., Albuquerque, NM 87110-6472; (505) 262-6463; TTY (505) 262-6463.
NEW YORK	(Upstate) Michael F. Merrill, Lafayette Ct., 465 Main St., Buffalo, NY 14203-1780; (716) 551-5768; TTY * via 1-800-877-8339.
	(Downstate) Joseph D'Agosta, 26 Federal Plaza, New York, NY 10278-0068; (212) 264-0771; TTY (212) 264-0927.
NORTH CAROLINA	Charles T. Ferebee, Koger Building, 2306 West Meadowview Road, Greensboro, NC 27407; (910) 547-4006; TTY (910) 547-4055.
NORTH DAKOTA	Guadalupe Herrera, First Interstate Tower North, 633 17th St., Denver, CO 80202-3607; (303) 672-5414; TTY (303) 672-5248.
OHIO	John E. Riordan, 200 North High St., Columbus, OH 43215-2499; (614) 469-6743; TTY (614) 469-6694.

OKLAHOMA	David H. Long, 500 West Main Place, Suite 400, Oklahoma City, OK 73102; (405) 553-7569; TTY * via 1-800-877-8339.
OREGON *	John G. Bonham, 400 S.W. Sixth Ave., Suite 700, Portland, OR 97204-1632 (503) 326-7012; TTY * via 1-800-877-8339.
PENNSYLVANIA	(Western) Bruce Crawford, 339 Sixth Ave., Pittsburgh, PA 15222-2515; (412) 644-5493; TTY (412) 644-5747.
	(Eastern) Joyce Gaskins, Wanamaker Bldg., 100 Penn Square East, Philadelphia, PA 19107; (215) 656-0624; TTY (215) 656-3452.
PUERTO RICO (and Caribbean)	Carmen R. Cabrera, 159 Carlos Chardon Ave., San Juan, PR 00918-1804; (787) 766-5576; TTY (787) 766-5909.
RHODE ISLAND	Robert L. Paquin, Thomas P. O'Neill, Jr., Fed. Bldg., 10 Causeway St., Boston, MA 02222-1092; (617) 565-5342; TTY (617) 565-5453.
SOUTH CAROLINA	Louis E. Bradley, Fed. Bldg., 1835 Assembly St., Columbia, SC 29201; (803) 765-5564; TTY (803) 253-3071.
SOUTH DAKOTA	Guadalupe Herrera, First Interstate Tower North, 633 17th St., Denver, CO 80202-3607; (303) 672-5414; TTY (303) 672-5248.
TENNESSEE	Virginia E. Peck, John J. Duncan Federal Bldg., Third Floor, 710 Locust St. S.W., Knoxville, TN 37902-2526; (423) 545-4391; TTY (423) 545-4559.
TEXAS	(Northern) Katie Worsham, 1600 Throckmorton, P.O. Box 2905, Fort Worth, TX 76113-2905; (817) 978-9016; TTY (817) 978-9274.
	(Southern) John T. Maldonado, Washington Sq., 800 Dolorosa, San Antonio, TX 78207-4563; (210) 472-6820; TTY (210) 472-6885.
UTAH	Guadalupe Herrera, First Interstate Tower North, 633 17th St., Denver, CO 80202-3607; (303) 672-5414; TTY (303) 672-5248.
VERMONT	David J. Lafond, Norris Cotton Fed. Bldg., 275 Chestnut St., Manchester, NH 03101-2487; (603) 666-7640; TTY (603) 666-7518.
VIRGINIA	Joseph K. Aversano, 3600 W. Broad St., Richmond, VA 23230-4920; (804) 278-4503; TTY (804) 278-4501.
WASHINGTON *	John W. Peters, Federal Office Bldg., 909 First Ave., Suite 200, Seattle, WA 98104-1000; (206) 220-5150; TTY (206) 220-5185.
WEST VIRGINIA	Bruce Crawford, 339 Sixth Ave., Pittsburgh, PA 15222-2515; (412) 644-5493; TTY (412) 644-5747.
WISCONSIN	Lana J. Vacha, Henry Reuss Fed. Plaza, 310 W. Wisconsin Ave., Ste. 1380, Milwaukee, WI 53203-2289; (414) 297-3113; TTY * via 1-800-877-8339.
WYOMING	Guadalupe Herrera, First Interstate Tower North, 633 17th St., Denver, CO 80202-3607; (303) 672-5414; TTY (303) 672-5248.

* the following areas in Washington State are served by the Oregon CPD office: Clark, Klickitat and Shamania Counties.

[FR Doc. 97–9034 Filed 4–7–97; 8:45 am]
BILLING CODE 4210–29–C

federal register

Tuesday
April 8, 1997

Part V

The President

Executive Order 13041—Further Amendment to Executive Order 13010, as Amended

Federal Register
Vol. 62, No. 67
Tuesday, April 8, 1997

Presidential Documents

Title 3—

The President

Executive Order 13041 of April 3, 1997

Further Amendment to Executive Order 13010, as Amended

By the authority vested in me as President by the Constitution and the laws of the United States of America, and in order to add the Assistant to the President for Economic Policy and the Assistant to the President and Director, Office of Science and Technology Policy to the Principals Committee of the President's Commission on Critical Infrastructure Protection (''Commission'') and to extend the life of the Commission for an additional 90 days, it is hereby ordered that Executive Order 13010, as amended, is further amended by adding (1) ''(xii) Assistant to the President for Economic Policy and Director of the National Economic Council; and (xiii) Assistant to the President and Director of the Office of Science and Technology Policy.'' to section 2 of that order and (2) ''and 90 days'' after ''1 year'' in section 6(f) of that order.

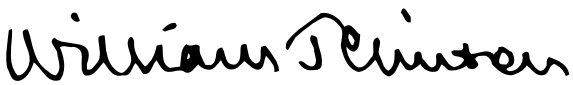

THE WHITE HOUSE,
April 3, 1997.

[FR Doc. 97–9200
Filed 4–7–97; 11:11 am]
Billing code 3195–01–P

Reader Aids

Federal Register

Vol. 62, No. 67

Tuesday, April 8, 1997

CUSTOMER SERVICE AND INFORMATION

Federal Register/Code of Federal Regulations

General Information, indexes and other finding aids **202–523–5227**

Laws

For additional information **523–5227**

Presidential Documents

Executive orders and proclamations **523–5227**

The United States Government Manual **523–5227**

Other Services

Electronic and on-line services (voice) **523–4534**

Privacy Act Compilation **523–3187**

TDD for the hearing impaired **523–5229**

ELECTRONIC BULLETIN BOARD

Free **Electronic Bulletin Board** service for Public Law numbers, Federal Register finding aids, and list of documents on public inspection. **202–275–0920**

FAX-ON-DEMAND

You may access our Fax-On-Demand service. You only need a fax machine and there is no charge for the service except for long distance telephone charges the user may incur. The list of documents on public inspection and the daily Federal Register's table of contents are available using this service. The document numbers are 7050-Public Inspection list and 7051-Table of Contents list. The public inspection list will be updated immediately for documents filed on an emergency basis.

NOTE: YOU WILL ONLY GET A LISTING OF DOCUMENTS ON FILE AND NOT THE ACTUAL DOCUMENT. Documents on public inspection may be viewed and copied in our office located at 800 North Capitol Street, N.W., Suite 700. The Fax-On-Demand telephone number is: **301–713–6905**

FEDERAL REGISTER PAGES AND DATES, APRIL

15355–15598 1
15599–15808 2
15809–16052 3
16053–16464 4
16465–16658 7
16659–17040 8

CFR PARTS AFFECTED DURING APRIL

At the end of each month, the Office of the Federal Register publishes separately a List of CFR Sections Affected (LSA), which lists parts and sections affected by documents published since the revision date of each title.

3 CFR

Proclamations:
6980 16033
6981 16035
6982 16039

Executive Orders:
13041 17039
13010 (amended by EO 13041) 17039

5 CFR

532 16465
591 16218

7 CFR

301 15809
600 16659
601 16659
723 15599
916 15355
917 15355
1901 16465
1940 16465
1951 16465
2003 16465
3570 16465

Proposed Rules:
300 16218
319 ..... 16218, 16737
1137 16737
1435 15622

8 CFR

3 15362
208 15362
236 15362
312 15751

9 CFR

205 15363

10 CFR

0 16053

Proposed Rules:
430 16739

12 CFR

208 15600
213 ..... 15364, 16053
303 16662
560 15819
1805 16444

Proposed Rules:
226 15624
545 15626
556 15626
557 15626
561 15626
563 15626
563g 15626

13 CFR

120 15601

14 CFR

1 16220
21 15570
25 15570
39 ..... 15373, 15375, 15378, 16064, 16066, 16067, 16069, 16070, 16072, 16073, 16473, 16474, 16475, 16477, 16664, 16667
61 ..... 16220, 16892
71 ..... 15602, 15603, 15751, 15825, 15826, 15827, 16075, 16076, 16668
91 15570
107 15751
108 15751
109 15751
119 15570
121 15570
125 15570
129 15751
135 15570
141 16220
143 16220
191 15751

Proposed Rules:
39 ..... 15429, 15431, 15433, 15435, 15437, 15439, 15441, 15443, 15861, 16113, 16115
71 ..... 15635, 15863, 15864
107 16892
108 16892

15 CFR

902 15381

16 CFR

23 16669

Proposed Rules:
432 16500
456 15865
703 15636

17 CFR

30 16687
202 ..... 15604, 16076
232 16690

18 CFR

2 15827

19 CFR

19 15831
113 15831
144 15831

20 CFR

404 15607

21 CFR

74 15389
101 15390

510 15751
556 15391
558 ..... 15391, 15751
1300 15391
1309 15391
1310 15391

23 CFR

625 15392

24 CFR

50 15800
55 15800
103 15794

25 CFR

12 15610
Proposed Rules:
41 15446

26 CFR

54 (2 documents) 16894, 17004
Proposed Rules:
54 17004

27 CFR

4 16479
Proposed Rules:
9 16502

29 CFR

2520 16979
2590 (3 documents) 16894, 17004

30 CFR

915 16490
Proposed Rules:
202 16121
216 16121
243 16116
253 15639
926 16506
944 16507
946 16509

32 CFR

701 15614
Proposed Rules:
199 16510
216 16691
552 15639

33 CFR

5 16695
26 16695
27 16695
95 16695
100 16695
110 16695
117 15842
130 16695
136 16695
138 16695
140 16695
151 16695
153 16695
155 16492
165 ..... 15398, 16080, 16081
177 16695
Proposed Rules:
100 16513
117 16122

36 CFR

Proposed Rules:
1258 15867

38 CFR

1 15400

40 CFR

9 16492
52 ..... 15751, 15844, 16704
63 ..... 15402, 15404
80 16082
81 15751
91 15806
180 15615
271 15407
300 ..... 15411, 15572, 16706, 16707
Proposed Rules:
52 ..... 15867, 16746
63 ..... 15452, 15453, 15754
70 16124
261 16747
268 16753
300 15572

44 CFR

64 16084
65 16087
67 16089
Proposed Rules:
67 16125

45 CFR

144 16894
146 16894
148 17004

46 CFR

2 16695
Proposed Rules:
8 17008

47 CFR

Ch. I 16093
0 15852
1 15852
2 15978
27 ..... 16099, 16493
36 15412
73 15858
90 15978
Proposed Rules:
2 ..... 16004, 16129
25 16129
63 15868
73 ..... 15869, 15870, 15871, 15872
90 16004
101 16514

48 CFR

235 16099

49 CFR

1 16498
29 15620
171 16107
Ch. III 16370
367 15417
368 15417
371 15417
372 15417
373 15417
374 15417
376 15417
377 15417
378 15417
387 16707
390 16707
395 16707
533 15859
571 ..... 16707, 16718
589 16718
Proposed Rules:
192 16131
195 16131
571 ..... 15353, 16131

50 CFR

229 16108
648 ..... 15381, 15425
678 ..... 16648, 16656
679 ..... 16112, 16736
Proposed Rules:
17 ..... 15640, 15646, 15872, 15873, 16518
229 16519
285 16132
630 16132
644 16132
648 16753
660 15874
678 16132

REMINDERS

The items in this list were editorially compiled as an aid to Federal Register users. Inclusion or exclusion from this list has no legal significance.

RULES GOING INTO EFFECT APRIL 8, 1997

FEDERAL DEPOSIT INSURANCE CORPORATION

Practice and procedure:

Applications, requests, and submittals, etc.; published 4-8-97

FEDERAL TRADE COMMISSION

Industry guides:

Jewelry, precious metals, and pewter industries; platinum product claims; published 4-8-97

HEALTH AND HUMAN SERVICES DEPARTMENT

Individual health insurance market requirements; published 4-8-97

TRANSPORTATION DEPARTMENT

Federal Highway Administration

Motor carrier safety standards:

Drivers, hours of service; financial responsibility minimum levels; published 4-8-97

COMMENTS DUE NEXT WEEK

AGRICULTURE DEPARTMENT

Animal and Plant Health Inspection Service

Exportation and importation of animals and animal products:

Exotic Newcastle Disease; disease status change—

Great Britain; comments due by 4-8-97; published 2-7-97

AGRICULTURE DEPARTMENT

Cooperative State Research, Education, and Extension Service

Small business innovation research grants program; administrative provisions; comments due by 4-10-97; published 3-11-97

AGRICULTURE DEPARTMENT

Food and Consumer Service

Child nutrition programs:

Child and adult care food program—

Day care home reimbursements; targeting improvement; comments due by 4-7-97; published 1-7-97

COMMERCE DEPARTMENT

National Oceanic and Atmospheric Administration

Fishery conservation and management:

Northeastern United States fisheries—

Northeast multispecies; comments due by 4-7-97; published 3-19-97

West Coast States and Western Pacific fisheries—

Pacific Coast groundfish; comments due by 4-8-97; published 2-7-97

Magnuson-Stevens Fishery Conservation and Management Act; implementation:

Limited access permits; central title and lien registry; comments due by 4-7-97; published 3-6-97

DEFENSE DEPARTMENT

Acquisition regulations:

Berry Amendment application to synthetic fabric and coated synthetic fabric and contracts and subcontracts for commercial items; comments due by 4-8-97; published 2-7-97

ENERGY DEPARTMENT

Federal Energy Regulatory Commission

Natural gas companies (Natural Gas Act):

Authorization to construct, operate, or modify facilities used for exportation or importation of natural gas; comments due by 4-11-97; published 2-10-97

ENVIRONMENTAL PROTECTION AGENCY

Air quality implementation plans:

Preparation, adoption, and submittal—

Sulfur oxide (sulfur dioxide) emissions reduction; comments due by 4-11-97; published 3-20-97

Air quality implementation plans; approval and promulgation; various States:

Delaware; comments due by 4-11-97; published 3-12-97

Illinois; comments due by 4-11-97; published 3-12-97

Oregon; comments due by 4-7-97; published 3-7-97

Pennsylvania; comments due by 4-10-97; published 3-11-97

Virginia; comments due by 4-11-97; published 3-12-97

Air quality implementation plans; √A√approval and promulgation; various States; air quality planning purposes; designation of areas:

Oregon; comments due by 4-7-97; published 3-7-97

Virginia; comments due by 4-11-97; published 3-12-97

Washington et al.; comments due by 4-7-97; published 3-7-97

Hazardous waste program authorizations:

Nevada; comments due by 4-7-97; published 3-7-97

FEDERAL COMMUNICATIONS COMMISSION

Radio stations; table of assignments:

Arkansas; comments due by 4-7-97; published 2-21-97

Idaho; comments due by 4-7-97; published 2-21-97

Illinois; comments due by 4-7-97; published 2-21-97

Kentucky; comments due by 4-7-97; published 2-21-97

Louisiana; comments due by 4-7-97; published 2-21-97

Montana; comments due by 4-7-97; published 2-21-97

North Dakota; comments due by 4-7-97; published 2-21-97

Tennessee; comments due by 4-7-97; published 2-21-97

Utah; comments due by 4-7-97; published 2-21-97

Washington; comments due by 4-7-97; published 2-21-97

FEDERAL EMERGENCY MANAGEMENT AGENCY

Disaster assistance:

Robert T. Stafford Disaster Relief and Emergency Assistance Act—

Criminal and Civil penalties; comments due by 4-11-97; published 2-10-97

GOVERNMENT ETHICS OFFICE

Conflict of interests;

Executive agency ethics training programs; comments due by 4-11-97; published 3-12-97

HEALTH AND HUMAN SERVICES DEPARTMENT

Food and Drug Administration

Food additives:

Paper and paperboard components—

Perfluoroalkyl substituted phophate ester acids, ammonium salts; comments due by 4-7-97; published 3-7-97

HEALTH AND HUMAN SERVICES DEPARTMENT

Public Health Service

Fellowships, internships, training:

National Institutes of Health clinical research loan repayment program for Individuals from disadvantaged backgrounds; comments due by 4-11-97; published 2-10-97

JUSTICE DEPARTMENT

Privacy Act; implementation; comments due by 4-7-97; published 3-7-97

PERSONNEL MANAGEMENT OFFICE

Employment:

Reduction in force—

Retention service credit received based on job performance; comments due by 4-7-97; published 2-4-97

TRANSPORTATION DEPARTMENT

Federal Aviation Administration

Airworthiness directives:

British Aerospace; comments due by 4-9-97; published 2-28-97

Construcciones Aeronauticas, S.A.; comments due by 4-10-97; published 3-3-97

Eurocopter Deutschland GmbH; comments due by 4-7-97; published 2-4-97

McDonnell Douglas; comments due by 4-7-97; published 2-26-97

Mitsubishi; comments due by 4-7-97; published 2-26-97

Raytheon; comments due by 4-7-97; published 1-29-97

Class D airspace; comments due by 4-7-97; published 2-20-97

Class E airspace; comments due by 4-7-97; published 2-19-97

TREASURY DEPARTMENT

Internal Revenue Service

Income taxes, etc.:

Basis reduction due to discharge of indebtedness; comments due by 4-7-97; published 1-7-97

Income taxes:

Inflation-indexed debt instruments; cross-reference; comments due by 4-7-97; published 1-6-97

Obligation-shifting transactions, multiple-party; realized income and deductions; comments due by 4-8-97; published 12-27-96

FEDERAL REGISTER WORKSHOP

THE FEDERAL REGISTER: WHAT IT IS AND HOW TO USE IT

FOR: Any person who uses the Federal Register and Code of Federal Regulations.

WHO: Sponsored by the Office of the Federal Register.

WHAT: Free public briefings (approximately 3 hours) to present:

1. The regulatory process, with a focus on the Federal Register system and the public's role in the development of regulations.
2. The relationship between the Federal Register and Code of Federal Regulations.
3. The important elements of typical Federal Register documents.
4. An introduction to the finding aids of the FR/CFR system.

WHY: To provide the public with access to information necessary to research Federal agency regulations which directly affect them. There will be no discussion of specific agency regulations.

Kansas City—Independence, MO

WHEN: May 6, 1997 at 9:00 am to 12:00 noon

WHERE: Harry S. Truman Library
Whistle Stop Room
U.S. Highway 24 and Delaware Street
Independence, MO 64050

Long Beach, CA

WHEN: May 20, 1997 at 9:00 am to 12:00 noon

WHERE: Glenn M. Anderson Federal Building
501 W. Ocean Blvd.
Conference Room 3470
Long Beach, CA 90802

San Francisco, CA

WHEN: May 21, 1997 at 9:00 am to 12:00 noon

WHERE: Phillip Burton Federal Building and Courthouse
450 Golden Gate Avenue
San Francisco, CA 94102

Anchorage, AK

WHEN: May 23, 1997 at 9:00 am to 12:00 noon

WHERE: Federal Building and U.S. Courthouse
222 West 7th Avenue
Executive Dining Room (Inside Cafeteria)
Anchorage, AK 99513

RESERVATIONS: For Kansas City, Long Beach, San Francisco and Anchorage workshops please call
Federal Information Center
1-800-688-9889 x 0