5–2–97
Vol. 62 No. 85
Pages 23939–24324

# federal register

Friday
May 2, 1997

**Briefings on how to use the Federal Register**
For information on briefings in Washington, DC, Kansas City and Independence, MO, Long Beach and San Francisco, CA, and Anchorage, AK, see the announcements on the inside cover of this issue and in the Reader Aids.

**Now Available Online**

***Code of Federal Regulations***

***via***

***GPO Access***

*(Selected Volumes)*

Free, easy, online access to selected *Code of Federal Regulations (CFR)* volumes is now available via *GPO Access*, a service of the United States Government Printing Office (GPO). *CFR* titles will be added to *GPO Access* incrementally throughout calendar years 1996 and 1997 until a complete set is available. GPO is taking steps so that the online and printed versions of the *CFR* will be released concurrently.

The *CFR* and *Federal Register* on *GPO Access*, are the official online editions authorized by the Administrative Committee of the Federal Register.

New titles and/or volumes will be added to this online service as they become available.

http://www.access.gpo.gov/nara/cfr

For additional information on ***GPO Access*** products, services and access methods, see page II or contact the *GPO Access* User Support Team via:

★ Phone: toll-free: 1-888-293-6498

★ Email: gpoaccess@gpo.gov

**FEDERAL REGISTER** Published daily, Monday through Friday, (not published on Saturdays, Sundays, or on official holidays), by the Office of the Federal Register, National Archives and Records Administration, Washington, DC 20408, under the Federal Register Act (49 Stat. 500, as amended; 44 U.S.C. Ch. 15) and the regulations of the Administrative Committee of the Federal Register (1 CFR Ch. I). Distribution is made only by the Superintendent of Documents, U.S. Government Printing Office, Washington, DC 20402.

**The Federal Register** provides a uniform system for making available to the public regulations and legal notices issued by Federal agencies. These include Presidential proclamations and Executive Orders and Federal agency documents having general applicability and legal effect, documents required to be published by act of Congress and other Federal agency documents of public interest. Documents are on file for public inspection in the Office of the Federal Register the day before they are published, unless earlier filing is requested by the issuing agency.

**The seal of the National Archives and Records Administration authenticates this issue of the Federal Register** as the official serial publication established under the Federal Register Act. 44 U.S.C. 1507 provides that the contents of the **Federal Register** shall be judicially noticed.

**The Federal Register** is published in paper, 24x microfiche and as an online database through *GPO Access*, a service of the U.S. Government Printing Office. The online edition of the **Federal Register** on *GPO Access* is issued under the authority of the Administrative Committee of the Federal Register as the official legal equivalent of the paper and microfiche editions. The online database is updated by 6 a.m. each day the **Federal Register** is published. The database includes both text and graphics from Volume 59, Number 1 (January 2, 1994) forward. Free public access is available on a Wide Area Information Server (WAIS) through the Internet and via asynchronous dial-in. Internet users can access the database by using the World Wide Web; the Superintendent of Documents home page address is http://www.access.gpo.gov/su__docs/, by using local WAIS client software, or by telnet to swais.access.gpo.gov, then login as guest, (no password required). Dial-in users should use communications software and modem to call (202) 512–1661; type swais, then login as guest (no password required). For general information about *GPO Access*, contact the *GPO Access* User Support Team by sending Internet e-mail to gpoaccess@gpo.gov; by faxing to (202) 512–1262; or by calling toll free 1–888–293–6498 or (202) 512–1530 between 7 a.m. and 5 p.m. Eastern time, Monday–Friday, except for Federal holidays.

The annual subscription price for the **Federal Register** paper edition is $555, or $607 for a combined **Federal Register**, Federal Register Index and List of CFR Sections Affected (LSA) subscription; the microfiche edition of the **Federal Register** including the Federal Register Index and LSA is $220. Six month subscriptions are available for one-half the annual rate. The charge for individual copies in paper form is $8.00 for each issue, or $8.00 for each group of pages as actually bound; or $1.50 for each issue in microfiche form. All prices include regular domestic postage and handling. International customers please add 25% for foreign handling. Remit check or money order, made payable to the Superintendent of Documents, or charge to your GPO Deposit Account, VISA or MasterCard. Mail to: New Orders, Superintendent of Documents, P.O. Box 371954, Pittsburgh, PA 15250–7954.

There are no restrictions on the republication of material appearing in the **Federal Register.**

**How To Cite This Publication:** Use the volume number and the page number. Example: 60 FR 12345.

## SUBSCRIPTIONS AND COPIES

| | |
|---|---|
| **PUBLIC** | |
| **Subscriptions:** | |
| Paper or fiche | **202–512–1800** |
| Assistance with public subscriptions | **512–1806** |
| **General online information** | **202–512–1530; 1–888–293–6498** |
| **Single copies/back copies:** | |
| Paper or fiche | **512–1800** |
| Assistance with public single copies | **512–1803** |
| **FEDERAL AGENCIES** | |
| **Subscriptions:** | |
| Paper or fiche | **523–5243** |
| Assistance with Federal agency subscriptions | **523–5243** |

**For other telephone numbers, see the Reader Aids section at the end of this issue.**

**NOW AVAILABLE ONLINE**

The January 1997 Office of the Federal Register Document Drafting Handbook

Free, easy, online access to the newly revised January 1997 Office of the Federal Register Document Drafting Handbook (DDH) is now available at:

**http://www.nara.gov/nara/fedreg/ddh/ddhout.html**

This handbook helps Federal agencies to prepare documents for publication in the **Federal Register**.

For additional information on access, contact the Office of the Federal Register's Technical Support Staff.

Phone: 202–523–3447

E-mail: info@fedreg.nara.gov

**FEDERAL REGISTER WORKSHOP**

## THE FEDERAL REGISTER: WHAT IT IS AND HOW TO USE IT

**FOR:** Any person who uses the Federal Register and Code of Federal Regulations.

**WHO:** Sponsored by the Office of the Federal Register.

**WHAT:** Free public briefings (approximately 3 hours) to present:

1. The regulatory process, with a focus on the Federal Register system and the public's role in the development of regulations.
2. The relationship between the Federal Register and Code of Federal Regulations.
3. The important elements of typical Federal Register documents.
4. An introduction to the finding aids of the FR/CFR system.

**WHY:** To provide the public with access to information necessary to research Federal agency regulations which directly affect them. There will be no discussion of specific agency regulations.

**FOR ADDITIONAL BRIEFINGS SEE THE ANNOUNCEMENT IN READER AIDS**

Printed on recycled paper containing 100% post consumer waste

# Contents

**Federal Register**

Vol. 62, No. 85

Friday, May 2, 1997

**Agriculture Department**
*See* Animal and Plant Health Inspection Service
*See* Commodity Credit Corporation
*See* Farm Service Agency
*See* Rural Utilities Service
NOTICES
Agency information collection activities:
Submission for OMB review; comment request, 24075

**Air Force Department**
NOTICES
Meetings:
Mountain Home Air Force Base, ID; enhanced training, hearing, 24089
Scientific Advisory Board, 24089

**Animal and Plant Health Inspection Service**
RULES
Genetically engineered organisms and products; requirements and procedures simplification, 23945–23958
Plant-related quarantine, domestic:
Pink bollworm, 23943–23945

**Antitrust Division**
NOTICES
Mutual antitrust enforcement assistance; proposed agreement between United States of America and Australia; comment request; correction, 24131, 24159

**Army Department**
*See* Engineers Corps

**Blind or Severely Disabled, Committee for Purchase From People Who Are**
*See* Committee for Purchase From People Who Are Blind or Severely Disabled

**Census Bureau**
NOTICES
Census 2000; block group program; proposed criteria; comment request, 24077–24080

**Centers for Disease Control and Prevention**
NOTICES
Agency information collection activities:
Proposed collection; comment request, 24115–24116
Smokeless tobacco products manufactured, imported, or packaged in U.S.; nicotine measuring standards, 24116–24119

**Civil Rights Commission**
NOTICES
Meetings; Sunshine Act, 24077

**Commerce Department**
*See* Census Bureau
*See* Foreign-Trade Zones Board
*See* International Trade Administration
*See* National Oceanic and Atmospheric Administration

**Committee for Purchase From People Who Are Blind or Severely Disabled**
NOTICES
Procurement list; additions and deletions, 24076–24077

**Commodity Credit Corporation**
NOTICES
Agency information collection activities:
Proposed collection; comment request, 24075–24076

**Commodity Futures Trading Commission**
RULES
Reporting requirements:
Options and futures large trader reports; daily filing requirements, 24026–24034

**Defense Department**
*See* Air Force Department
*See* Engineers Corps
NOTICES
*Applications, hearings, determinations, etc.:*
Submission for OMB review; comment request, 24088

**Education Department**
NOTICES
Grants and cooperative agreements; availability, etc.:
National Research Institutes' field-initiated studies program; correction, 24090
Meetings:
National Assessment Governing Board, 24090
State educational agencies; submission of expenditure and revenue data, etc., 24090–24091

**Employment and Training Administration**
NOTICES
Adjustment assistance:
Anchor Glass Container, 24137
Adjustment assistance and NAFTA transitional adjustment assistance:
Badger Northland, Inc., et al., 24134–24136
Rayonier, Inc., 24136–24137
NAFTA transitional adjustment assistance:
Flexible Corp., 24137

**Energy Department**
*See* Energy Efficiency and Renewable Energy Office
*See* Federal Energy Regulatory Commission
*See* Southeastern Power Administration
NOTICES
Grants and cooperative agreements; availability, etc.:
Exploration and production technologies; testing demonstration program, 24091–24092

**Energy Efficiency and Renewable Energy Office**
PROPOSED RULES
Energy conservation:
New Federal residential buildings; energy efficiency code, 24164–24209

### Engineers Corps
**RULES**
Danger zones and restricted areas:
Persons subject to restrictions; clarification
Correction, 24034–24035
**NOTICES**
Meetings:
Coastal Engineering Research Board, 24089

### Environmental Protection Agency
**RULES**
Air quality implementation plans; approval and promulgation; various States; air quality planning purposes; designation of areas:
Louisiana, 24036–24038
Maine, 24038–24040
Air quality implementation plans; approval and promulgation; various States:
New Jersey, 24035–24036
Pesticides; tolerances in food, animal feeds, and raw agricultural commodities:
Clomazone, 24040–24045
Paraquat, 24045–24051
Propiconazole
Correction, 24045
Solid wastes:
Beverage containers and resource recovery facilties; mangement guidelines—
Federal regulatory reform, 24051–24054
**PROPOSED RULES**
Air quality implementation plans; approval and promulgation; various States; air quality planning purposes; designation of areas:
Maine, 24065
Air quality implementation plans; approval and promulgation; various States:
Pennsyvania, 24060–24065
Pesticides; tolerances in food, animal feeds, and raw agricultural commodities:
Bromoxynil, 24065–24073
Solid wastes:
Hazardous waste combustors, etc.; maximum achievable control technologies performance standards, 24212–24254
**NOTICES**
Environmental statements; availability, etc.:
Agency statements—
Comment availability, 24105–24106
Weekly receipts, 24106
Meetings:
Common Sense Initiative Council, 24106–24107
Industrial Combustion Coordinated Rulemaking Advisory Coordinating Committee, 24107–24108
Science Advisory Board, 24108
Superfund; response and remedial actions, proposed settlements, etc.:
Vanguard Vinyl Siding, Inc., 24109–24110
Superfund program:
Prospective purchaser agreements—
Vineland Co. Chemical Site, NJ, 24109
Toxic and hazardous substances control:
Premanufacture exemption approvals, 24110

### Executive Office of the President
*See* Presidential Documents

### Farm Credit Administration
**NOTICES**
Meetings; Sunshine Act, 24110

### Farm Service Agency
**NOTICES**
Agency information collection activities:
Proposed collection; comment request, 24075–24076

### Federal Aviation Administration
**RULES**
Air traffic operating and flight rules:
Fees for air traffic services for certain flights through U.S.-controlled airspace
Correction, 24286
Airworthiness directives:
Aerospatiale, 24021–24022
Boeing, 24009–24013, 24015–24017, 24022–24024
Jetstream, 24017–24019
McDonnell Douglas, 24019–24021
Raytheon, 24013–24014
Correction, 24014–24015
Class D airpace
Correction, 24024–24025
Standard instrument approach procedures, 24025–24026
**PROPOSED RULES**
Aircraft products and parts; certification procedures:
Type certificated products; certification of changes, 24288–24299
**NOTICES**
Advisory circulars; availability, etc.:
Type certification procedures for changed products, 24152–24153
Airport noise compatibility program:
Boise Air Terminal, ID, 24153–24154

### Federal Communications Commission
**RULES**
Organization, functions, and authority delegations:
Associate General Counsel, 24054–24055
Radio stations; table of assignments:
Michigan, 24055
**PROPOSED RULES**
Common carrier services:
Satellite communications—
Digital audio radio service terrestrial repeaters or gap-fillers; deployment, 24073
**NOTICES**
Agency information collection activities:
Submission for OMB review; comment request, 24110–24112
Meetings:
North American Numbering Council
Closure to public, 24112

### Federal Deposit Insurance Corporation
**NOTICES**
Meetings; Sunshine Act, 24112–24113

### Federal Energy Regulatory Commission
**NOTICES**
Electric rate and corporate regulation filings:
L'Energia, L.P., et al., 24099–24103
Hydroelectric applications, 24103–24104
*Applications, hearings, determinations, etc.:*
Avoca Natural Gas Storage, 24092
Canyon Creek Compression Co., 24093
El Paso Natural Gas Co., 24093
K N Interstate Gas Transmission Co., 24093
Kohinoor Energy Limited et al., 24093–24097
Northern Natural Gas Co., 24097
Richfield Gas Storage System, 24098

Stingray Pipeline Co., 24098
Trailblazer Pipeline Co., 24098
Williams Natural Gas Co., 24098–24099
Williams Natural Gas Co.; correction, 24159

**Federal Highway Administration**
**NOTICES**
Grants and cooperative agreements; availability, etc.:
Strategic planning process; development of performance measures, 24154–24157

**Federal Housing Finance Board**
**NOTICES**
Meetings; Sunshine Act, 24113

**Federal Reserve System**
**NOTICES**
Banks and bank holding companies:
Change in bank control, 24113
Formation, acquisitions, and mergers, 24113–24114
Formations, acquisitions, and mergers, 24114
Meetings; Sunshine Act, 24114
Permissible nonbanking activities, 24114

**Federal Trade Commission**
**NOTICES**
Mutual antitrust enforcement assistance; proposed agreement between United States of America and Australia; comment request; correction, 24131, 24159

**Financial Management Service**
*See* Fiscal Service

**Fiscal Service**
**RULES**
Bonds and notes, U.S. Treasury:
Series EE U.S. savings bonds—
Rate structure changes, 24280–24283

**Food and Drug Administration**
**NOTICES**
Harmonisation International Conference; guidelines availability:
Biotechnological/biological products; cell substrates used for production; derivation and characterization quality, 24312–24317
Pharmaceuticals—
Impurities; residual solvents for safety of patients, 24302–24309
Harmonization International Conference; guidelines availability:
Human clinical trails; pharmaceuticals, nonclinical studies, 24320–24323
Meetings:
Advisory committees, panels, etc., 24119–24120

**Foreign-Trade Zones Board**
**NOTICES**
*Applications, hearings, determinations, etc.:*
Alabama
Shell Oil Co.; oil refinery complex, 24080
Texas, 24081
LYONDELL-CITGO Refining Co., Ltd.; oil refinery and petrochemical complex, 24080–24081

**Health and Human Services Department**
*See* Centers for Disease Control and Prevention
*See* Food and Drug Administration
*See* Health Care Financing Administration
*See* National Institutes of Health
*See* Substance Abuse and Mental Health Services Administration
**NOTICES**
Meetings:
Advisory Commission on Consumer Protection and Quality in the Health Care Industry, 24114–24115

**Health Care Financing Administration**
**NOTICES**
Organization, functions, and authority delegations, 24120–24126

**Housing and Urban Development Department**
**NOTICES**
Grants and cooperative agreements; availability, etc.:
Facilities to assist homeless—
Excess and surplus Federal property, 24128

**Immigration and Naturalization Service**
**NOTICES**
Agency information collection activities:
Proposed collection; comment request, 24131

**Interior Department**
*See* Land Management Bureau
*See* National Park Service

**International Trade Administration**
**NOTICES**
Antidumping:
Forged stainless steel flanges from—
India, 24088
Antidumping and countervailing duties:
Administrative review requests, 24081–24082
Countervailing duties:
Cotton shop towels from—
Pakistan, 24082–24085
Leather, etc. from—
Argentina, 24085–24088

**Justice Department**
*See* Antitrust Division
*See* Immigration and Naturalization Service
*See* Justice Programs Office
**RULES**
Conflict of interests, 23941–23943
**NOTICES**
Agency information collection activities:
Submission for OMB review; comment request, 24130–24131

**Justice Programs Office**
**NOTICES**
Agency information collection activities:
Proposed collection; comment request, 24131–24132
Submission for OMB review; comment request, 24132–24133

**Labor Department**
*See* Employment and Training Administration
*See* Labor Statistics Bureau
**NOTICES**
Agency information collection activities:
Submission for OMB review; comment request, 24133–24134

**Labor Statistics Bureau**
NOTICES
Agency information collection activities:
Proposed collection; comment request, 24137–24138

**Land Management Bureau**
NOTICES
Meetings:
Front Range Resource Advisory Council, 24128
Resource advisory councils—
Bakersfield, CA, 24128–24129
Realty actions; sales, leases, etc.:
California, 24129
Nevada, 24129–24130
Wyoming; correction, 24159

**Legal Services Corporation**
RULES
Aliens; legal assistance restrictions
Correction, 24054, 24159
NOTICES
Meetings; Sunshine Act, 24138–24139

**National Aeronautics and Space Administration**
NOTICES
Agency information collection activities:
Proposed collection; comment request, 24139–24140

**National Institutes of Health**
NOTICES
Meetings:
National Institute of Arthritis and Musculoskeletal and Skin Diseases, 24127
National Institute of Diabetes and Digestive and Kidney Diseases, 24126–24127
National Institute on Aging, 24126
Research Grants Division special emphasis panels, 24127

**National Oceanic and Atmospheric Administration**
RULES
Fishery conservation and management:
Alaska; fisheries of Exclusive Economic Zone—
Pacific cod, 24058
Yellowfin sole, 24058–24059
PROPOSED RULES
Fishery conservation and management:
Northeastern United States fisheries—
New England Fishery Management Council; meetings, 24073–24074

**National Park Service**
NOTICES
Environmental statements; notice of intent:
Lake Roosevelt National Recreation Area, 24130

**National Science Foundation**
NOTICES
Meetings:
Advanced Scientific Computing Special Emphasis Panel, 24140
Biological Sciences Advisory Committee, 24140
Electrical Communication Systems Special Emphasis Panel, 24140
Genetics Advisory Panel, 24140–24141
Geosciences Advisory Committee, 24141
Geosciences Special Emphasis Panel, 24141
Materials Research Special Emphasis Panel, 24141

**Personnel Management Office**
NOTICES
Personnel management demonstration projects:
Commerce Department—
Alternative personnel management system, 24256–24278

**Presidential Documents**
ADMINISTRATIVE ORDERS
Korean Peninsula Energy Development Organization; U.S. contribution (Presidential Determination No. 97–21 of April 24, 1997), 23939

**Public Health Service**
*See* Centers for Disease Control and Prevention
*See* Food and Drug Administration
*See* National Institutes of Health
*See* Substance Abuse and Mental Health Services Administration

**Research and Special Programs Administration**
RULES
Hazardous materials transportation and pipeline safety:
Informal guidance and interpretive assistance; availability, 24055–24058
NOTICES
Pipeline safety; waiver petitions:
Northern Eclipse, Inc., 24157–24158

**Rural Utilities Service**
RULES
Telecommunications standards and specifications:
Materials, equipment, and construction—
Telecommunications plant acceptance tests and measurements, 23958–24008

**Securities and Exchange Commission**
PROPOSED RULES
Investment companies:
Registered investment company name requirements
Correction, 24161
Investment companies and securities:
Open-end management investment companies; registration form
Correction, 24160
Securities:
Open-end management investment companies—
New disclosure option; correction, 24160
NOTICES
Meetings; Sunshine Act, 24146–24147
Self-regulatory organizations; proposed rule changes:
National Association of Securities Dealers, Inc., 24147–24151
*Applications, hearings, determinations, etc.:*
Cinergy Corp., et al., 24141–24144
WNC Housing Tax Credit Fund VI, L.P., et al., 24144–24146

**Social Security Administration**
NOTICES
Agency information collection activities:
Proposed collection; comment request, 24151

**Southeastern Power Administration**
NOTICES
Power rates:
Stonewall Jackson Project, 24104–24105

**Substance Abuse and Mental Health Services Administration**
NOTICES
Meetings; special emphasis panels
June, 24127–24128

**Transportation Department**
*See* Federal Aviation Administration
*See* Federal Highway Administration
*See* Research and Special Programs Administration
NOTICES
Agency information collection activities:
Submission for OMB review; comment request, 24151–24152
Aviation proceedings:
Agreements filed; weekly receipts, 24152
Certificates of public convenience and necessity and foreign air carrier permits; weekly applications, 24152

**Treasury Department**
*See* Fiscal Service

## Separate Parts In This Issue

**Part II**
Department of Energy, Energy Efficiency and Renewable Energy Office, 24164–24209

**Part III**
Environmental Protection Agency, 24212–24254

**Part IV**
Office of Personnel Management, 24256–24278

**Part V**
Department of the Treasury, Fiscal Service, 24280–24283

**Part VI**
Department of Transportation, Federal Aviation Administration, 24286

**Part VII**
Department of Transportation, Federal Aviation Administration, 24288–24299

**Part VIII**
Department of Health and Human Services, Food and Drug Administration, 24302–24309

**Part IX**
Department of Health and Human Services, Food and Drug Administration, 24312–24317

**Part X**
Department of Health and Human Services, Food and Drug Administration, 24320–24323

## Reader Aids

Additional information, including a list of public laws, telephone numbers, reminders, and finding aids, appears in the Reader Aids section at the end of this issue.

## Electronic Bulletin Board

Free **Electronic Bulletin Board** service for Public Law numbers, **Federal Register** finding aids, and a list of documents on public inspection is available on 202–275–1538 or 275–0920.

## CFR PARTS AFFECTED IN THIS ISSUE

A cumulative list of the parts affected this month can be found in the Reader Aids section at the end of this issue.


**3 CFR**

**Administrative Orders:**

Presidential Determinations:

No. 97–21 of April 24, 1997 .....23939

**5 CFR**

3801.....23941

**7 CFR**

301.....23943
340.....23945
1755.....23958

**10 CFR**

**Proposed Rules:**

435.....24164

**14 CFR**

39 (8 documents) .....24009, 24013, 24014, 24015, 24017, 24019, 24021, 24022
71.....24024
97.....24025
187.....24286

**Proposed Rules:**

11.....24288
21.....24288
25.....24288

**17 CFR**

1.....24026
15.....24026
16.....24026
17.....24026

**Proposed Rules:**

230 (2 documents) .....24160
239.....24160
270 (2 documents) .....24160, 24161
274.....24160

**28 CFR**

45.....23941

**31 CFR**

351.....24280

**33 CFR**

334.....24034

**40 CFR**

52 (2 documents) .....24035, 24036
81 (2 documents) .....24036, 24038
180 (3 documents) .....24040, 24045
244.....24051

**Proposed Rules:**

52.....24060
60.....24212
63.....24212
81.....24065
180.....24065
260.....24212
261.....24212
264.....24212
265.....24212
266.....24212
270.....24212
271.....24212

**45 CFR**

1626 (2 documents) .....24054, 24159

**47 CFR**

0.....24054
73.....24055

**Proposed Rules:**

25.....24073

**49 CFR**

107.....24055
190.....24055

**50 CFR**

670.....24058
679.....24058

**Proposed Rules:**

648.....24073

**Federal Register**
Vol. 62, No. 85
Friday, May 2, 1997

# Presidential Documents

**Title 3—**

## The President

**Presidential Determination No. 97–21 of April 24, 1997**

## Use of Nonproliferation, Anti-Terrorism, Demining and Related Programs Account Funds for the U.S. Contribution to the Korean Peninsula Energy Development Organization (KEDO)

**Memorandum for the Secretary of State**

Pursuant to the authority vested in me by section 614(a)(1) of the Foreign Assistance Act of 1961, as amended, 22 U.S.C. 2364(a)(1), I hereby determine that it is important to the security interests of the United States to furnish up to $25 million in funds made available under heading ''Nonproliferation, Anti-Terrorism, Demining and Related Programs'' in title II of the Foreign Operations, Export Financing, and Related Programs Appropriations Act, 1997 (as enacted in Public Law 104–208) for the United States contribution to the Korean Peninsula Energy Development Organization without regard to any provision of law within the scope of section 614(a)(1). I hereby authorize this contribution.

You are hereby authorized and directed to transmit this determination to the Congress and to arrange for its publication in the **Federal Register.**

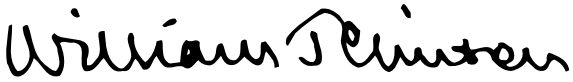

THE WHITE HOUSE,
*Washington, April 24, 1997.*

[FR Doc. 97–11686
Filed 5–1–97; 8:45 am]
Billing code 4710–10–M

# Rules and Regulations

Federal Register
Vol. 62, No. 85
Friday, May 2, 1997

This section of the FEDERAL REGISTER contains regulatory documents having general applicability and legal effect, most of which are keyed to and codified in the Code of Federal Regulations, which is published under 50 titles pursuant to 44 U.S.C. 1510.

The Code of Federal Regulations is sold by the Superintendent of Documents. Prices of new books are listed in the first FEDERAL REGISTER issue of each week.

## DEPARTMENT OF JUSTICE

## 5 CFR Part 3801

## 28 CFR Part 45

**RIN 3209–AA15**

## Supplemental Standards of Ethical Conduct for Employees of the Department of Justice

**AGENCY:** Department of Justice (Department).

**ACTION:** Final rule.

**SUMMARY:** The Department of Justice, with the concurrence of the Office of Government Ethics (OGE), is issuing a final rule for Department employees as a supplement to the Uniform Standards of Ethical Conduct for Employees of the Executive Branch (Uniform Standards) issued by OGE. The regulations established by the final rule, which adopt the prior interim regulations as final with two minor changes, are a necessary supplement to the Uniform Standards because they address statutory requirements and issues that are unique to the Department. The Department is also finalizing the revision of its residual employee responsibilities regulation, with certain changes.

**EFFECTIVE DATE:** May 2, 1997.

**FOR FURTHER INFORMATION CONTACT:** Mary Braden, U.S. Department of Justice, Justice Management Division, Departmental Ethics Office, (202) 514–8196.

**SUPPLEMENTARY INFORMATION:**

### I. Rulemaking History

On August 7, 1992, the Office of Government Ethics published the Uniform Standards. See 57 FR 35006–35067, as corrected at 57 FR 48557, 57 FR 52583, and 60 FR 51667, and amended at 61 FR 42965–42970 (as corrected at 61 FR 48733) and 61 FR 50689–50691 (interim rule revisions adopted as final at 62 FR 12531), with additional grace period extensions at 59 FR 4779–4780, 60 FR 6390–6391, 60 FR 66857–66858, and 61 FR 40950–40952. The Uniform Standards, codified at 5 CFR part 2635 and effective February 3, 1993, established uniform standards of ethical conduct for executive branch personnel. Pursuant to E.O. 12674 (54 FR 15159, 3 CFR, 1989 Comp., p. 215, as modified by E.O. 12731, 55 FR 42547, 3 CFR, 1990 Comp., p. 306) and 5 CFR 2635.105, executive branch agencies may issue agency-specific regulations, with the concurrence of OGE, that supplement the Uniform Standards. After considering its unique operations, the Department, with the concurrence of OGE, has determined that the regulations established by the final rule, based on the prior interim rule with two minor changes, are necessary to implement the Department's ethics program successfully.

### II. Comments

On November 25, 1996, the Department, with the concurrence of OGE, issued interim supplemental standards regulations. See 61 FR 59811–59815, which provided for a 45-day comment period that ended January 9, 1997. We received only one comment on the interim rule. The comment was in regard to 5 CFR 3801.106 of the interim rule dealing with outside employment. Section 3801.106(b)(1)(i) of the interim rule, which generally prohibits outside employment that involves the practice of law, contains an exception for the practice of law on behalf of certain family members, specifically, the employee, his parents, spouse, or minor children. The commenter noted that the regulation did not conform to the exceptions for representing family members found in 18 U.S.C. 203(d) and 205(e). 18 U.S.C. 203 and 205 generally prohibit an employee from acting as agent or attorney for anyone, with or without compensation, before any agency or court of the United States on a matter in which the United States is a party or has a direct and substantial interest. Exceptions in these two statutes permit representations on behalf of the employee's parents, spouse, child and certain other persons. There is no qualification that the child must be a minor in the language of these statutes. Therefore, we agree with the commenter that the regulation should conform to the representational statutes and have been told that the Office of Government Ethics has no objection to our amending the rule by removing the word ''minor'' which appears before the word ''children'' in 5 CFR 3801.106(b)(1)(i). For ease of reference, the Department is publishing in this rulemaking document the part 3801 regulation in its entirety.

### III. Additional Changes to 28 CFR Part 45

We are also making two additional changes to the Department's agency conduct regulations at 28 CFR part 45, as revised in the prior interim rule. First, in addition to the sections the Department repealed because they were superseded by the Uniform Standards, we are now also repealing previously redesignated and amended § 45.3 (old § 45.735–5(b)), because it was superseded by regulations at 5 CFR part 2640 which the Office of Government Ethics issued as a final rule on December 18, 1996, 61 FR 66830–66851 (part III), as corrected at 62 FR 1361 (January 9, 1997), and which became effective January 17, 1997.

Second, pursuant to 5 U.S.C. 301, we are publishing a Department rule at 28 CFR 45.4 which was issued earlier as policy on April 21, 1995. This rule authorizes Department of Justice office and library equipment and facilities. This policy has actually been in effect in a modified form since 1989. We believe that it is reasonable to authorize employees to make certain limited personal use of Department property as long as managers have the right to limit or revoke such use should it interfere with the conduct of official business. We have also amended 5 CFR 3801.105 which refers employees to the Department policy authorizing certain use of Department property to refer instead to 28 CFR 45.4.

### IV. Matters of Regulatory Procedure

*Executive Order 12866*

In promulgating this final regulation, the Department of Justice has adhered to the regulatory philosophy and the applicable principles of regulation set forth in section 1 of Executive Order 12866, Regulatory Planning and Review. This regulation has not been reviewed by the Office of Management and Budget under the Executive Order, it

deals with agency organizational, management, and personnel matters and is not in any event, deemed ''significant'' thereunder.

*Regulatory Flexibility Act*

Pursuant to the Regulatory Flexibility Act, 5 U.S.C. chapter 6, as Assistant Attorney General for Administration of the Department of Justice, I have determined that this regulation will not have a significant economic impact on a substantial number of small entities, because it affects only Department of Justice employees.

*Paperwork Reduction Act*

As Assistant Attorney General for Administration of the Department of Justice, I have determined that the Paperwork Reduction Act, 44 U.S.C. chapter 35, does not apply to the regulation established by the final rule, because the regulation does not contain any information collection requirements that require the approval of the Office of Management and Budget.

**List of Subjects in 5 CFR Part 3801 and 28 CFR Part 45**

Conflicts of interest, Executive branch standards of conduct, Government employees.

Dated: April 23, 1997.

**Stephen R. Colgate.**

*Assistant Attorney General for Administration, Department of Justice.*

Approved: April 25, 1997.

**Stephen D. Potts,**

*Director, Office of Government Ethics.*

Accordingly, for the reasons set forth in the preamble, the Department of Justice, with the concurrence of the Office of Government Ethics, is amending title 5 of the Code of Federal Regulations and the Department is also amending title 28 of the Code of Federal Regulations as follows:

**TITLE 5—[AMENDED]**

**CHAPTER XXVIII—DEPARTMENT OF JUSTICE**

1. Part 3801 is revised to read as follows:

## PART 3801—SUPPLEMENTAL STANDARDS OF ETHICAL CONDUCT FOR EMPLOYEES OF THE DEPARTMENT OF JUSTICE

Sec.

3801.101 General.
3801.102 Detailed or assigned special agents of certain Departmental components.
3801.103 Designation of separate Departmental components.
3801.104 Purchase or use of certain forfeited and other property.
3801.105 Personal use of Government property.
3801.106 Outside employment.

**Authority:** 5 U.S.C. 301, 7301; 5 U.S.C. App. (Ethics in Government Act of 1978); E.O. 12674, 54 FR 15159, 3 CFR, 1989 Comp., p. 215, as modified by E.O. 12731, 55 FR 42547, 3 CFR, 1990 Comp., p. 306; E.O. 12988, 61 FR 4739; 5 CFR 2635.105, 2635.203(a), 2635.403(a), 2635.701–2635.705, 2635.803, 2635.807(a)(2)(ii); and DOJ Order 1735.1.

### § 3801.101 General.

In accordance with § 2635.105 of this title, the regulations in this part apply to employees of the Department of Justice and supplement the Standards of Ethical Conduct for Employees of the Executive Branch in part 2635 of this title. In addition to the regulations contained in part 2635 of this title and in this part, employees are subject to the conduct regulations contained in part 735 of this title and 28 CFR part 45.

### § 3801.102 Detailed or assigned special agents of certain Departmental components.

Notwithstanding a detail or assignment to another entity, any special agent of the Federal Bureau of Investigation or Drug Enforcement Administration who is subject to the regulations or standards of ethical conduct of that entity pursuant to § 2635.104 of this title shall also remain subject to the regulations in this part.

### § 3801.103 Designation of separate Departmental components.

(a) Pursuant to § 2635.203(a) of this title, each of the following components is designated as a separate agency for purposes of the regulations contained in subpart B of part 2635 of this title governing gifts from outside sources, and, accordingly, § 2635.807 of this title governing teaching, speaking, and writing:

Antitrust Division
Bureau of Prisons
(including Federal Prison Industries, Inc.)
Civil Division
Civil Rights Division
Community Relations Service
Criminal Division
Drug Enforcement Administration
Environment and Natural Resources Division
Executive Office for Immigration Review
Executive Office for United States Attorneys
(The Executive Office for United States Attorneys shall not be considered separate from any Office of the United States Attorney for a judicial district, but only from other designated components of the Department of Justice.)
Executive Office for United States Trustees
(The Executive Office for United States Trustees shall not be considered separate from any Office of the United States Trustee for a region, but only from other designated components of the Department of Justice.)
Federal Bureau of Investigation
Foreign Claims Settlement Commission
Immigration and Naturalization Service
Independent Counsel appointed by the Attorney General
INTERPOL
National Drug Intelligence Center
Justice Management Division
Office of Information and Privacy
Office of Intelligence Policy and Review
Office of Community Oriented Policing Services
Office of Justice Programs
Office of the Pardon Attorney
Office of Policy Development
Offices of the United States Attorney (94)
(Each Office of the United States Attorney for a judicial district shall be considered a separate component from each other such office.)
Offices of the United States Trustee (21)
(Each Office of the United States Trustee for a region shall be considered a separate component from each other such office.)
Tax Division
United States Marshals Service
United States Parole Commission

(b) Employees serving in positions within the Department but outside of the components designated in paragraph (a) of this section must continue to treat the entire Department of Justice as their employing agency for purposes of the gift rules of subpart B of part 2635 of this title and the application of the teaching, speaking and writing provisions found in § 2635.807 of this title.

### § 3801.104 Purchase or use of certain forfeited and other property.

(a) In the absence of prior approval by the agency designee, no employee shall purchase, directly or indirectly, from the Department of Justice or its agents property forfeited to the United States and no employee shall use property forfeited to the United States which has been purchased, directly or indirectly, from the Department of Justice or its agents by his spouse or minor child. Approval may be granted only on the basis of a written determination by the agency designee that in the mind of a reasonable person with knowledge of the circumstances, purchase or use by the employee of the asset will not raise a question as to whether the employee has used his official position or nonpublic information to obtain or assist in an advantageous purchase or create an appearance of loss of impartiality in the performance of the employee's duties. A copy of the written determination shall be filed with the Deputy Attorney General.

(b) No employee of the United States Marshals Service, Federal Bureau of Investigation, or Drug Enforcement

Administration shall purchase, directly or indirectly, from his component, the General Services Administration, or the agent of either, property formerly used by that component and no such employee shall use property formerly used by his component which has been purchased, directly or indirectly, by his spouse or minor child from his component, the General Services Administration, or to the agent of either.

**§ 3801.105 Personal use of Government property.**

Employees are prohibited by part 2635 of this title from using Government property for other than authorized purposes. The Department rule authorizing limited personal use of Department of Justice office and library equipment and facilities by its employees is at 28 CFR 45.4.

**§ 3801.106 Outside employment.**

(a) *Definition.* For purposes of this section, *outside employment* means any form of employment, business relationship or activity, involving the provision of personal services whether or not for compensation, other than in the discharge of official duties. It includes, but is not limited to, services as a lawyer, officer, director, trustee, employee, agent, consultant, contractor, or general partner. Speaking, writing and serving as a fact witness are excluded from this definition, so long as they are not combined with the provision of other services that do fall within this definition, such as the practice of law. Employees who wish to engage in compensated speaking and writing should review § 2635.807 of this title.

(b) *Prohibitied outside employment.* (1) No employee may engage in outside employment that involves:

(i) The practice of law, unless it is uncompensated and in the nature of community service, or unless it is on behalf of himself, his parents, spouse, or children;

(ii) Any criminal or have as corpus matter, be it Federal, State, or local; or

(iii) Litigation, investigations, grants or other matters in which the Department of Justice is or represents a party, witness, litigant, investigator or grant-maker.

(2) Where application of the restrictions of paragraph (b)(1) of this section will cause undue personal or family hardship; unduly prohibit an employee from completing a professional obligation entered into prior to Government service; or unduly restrict the Department from securing necessary and uniquely specialized services, the restrictions may be waived in writing based upon a determination that the activities covered by the waiver are not expected to involve conduct prohibited by statute or Federal regulation. Employees should refer to DOJ Order 1735.1 on obtaining waivers. The Order is available from the agency designee which, for purposes of this rule, shall be the Deputy Designated Agency Ethics Official for the component.

(c) *Prior approval for outside employment.* (1) An employee must obtain written approval before engaging in outside employment, not otherwise prohibited by paragraph (b) of this section that involves:

(i) The practice of law; or

(ii) A subject matter, policy,or program that is in his component's area of responsibility.

(2) Employees should refer to DOJ Order 1735.1 for procedures on obtaining prior approval. A waiver granted pursuant to paragraph (b)(2) of this section will be sufficient to satisfy this prior approval requirement.

(3) Approval shall be granted only upon a determination that the outside employment is not expected to involve conduct that is prohibited by statute or Federal regulation.

**TITLE 28—[AMENDED]**

**CHAPTER I—DEPARTMENT OF JUSTICE**

## PART 45—[AMENDED]

2. The authority citation for part 45 is revised to read as follows:

**Authority:** 5 U.S.C. 301, 7301; 18 U.S.C. 207; 28 U.S.C. 503, 528; DOJ Order 1735.1.

3. Section 45.1 is republished to read as follows:

**§ 45.1 Cross-reference to ethical standards and financial disclosure regulations.**

Employees of the Department of Justice are subject to the executive branch-wide Standards of Ethical Conduct at 5 CFR part 2635, the Department of Justice regulations at 5 CFR part 3801 which supplement the executive branch-wide standards, the executive branch-wide financial disclosure regulations at 5 CFR part 2634 and the executive branch-wide employee responsibilities and conduct regulations at 5 CFR part 735.

**§ 45.3 [Removed]**

**§ 45.4 [Redesignated as § 45.3]**

4. Section 45.3 is removed and § 45.4 is redesignated as § 45.3.

5. A new § 45.4 is added to read as follows:

**§ 45.4 Personal use of Government property.**

(a) Employees may use Government property only for official business or as authorized by the Government. See 5 CFR 2635.101(b)(9), 2635.704(a). The following uses of Government office and library equipment and facilities are hereby authorized:

(1) Personal uses that involve only negligible expense (such as electricity, ink, small amounts of paper, and ordinary wear and tear); and

(2) Limited personal telephone/fax calls to locations within the office's commuting area, or that are charged to non-Government accounts.

(b) The foregoing authorization does not override any statutes, rules, or regulations governing the use of specific types of Government property (e.g. internal Departmental policies governing the use of electronic mail; and 41 CFR (FPMR) 101–35.201, governing the authorized use of long-distance telephone services), and may be revoked or limited at any time by any supervisor or component for any business reason.

(c) In using Government property, employees should be mindful of their responsibility to protect and conserve such property and to use official time in an honest effort to perform official duties. See 5 CFR 2635.101(b)(9), 2635.704(a), 2635.705(a).

[FR Doc. 97–11476 Filed 5–1–97; 8:45 am]
BILLING CODE 4410–AR–M

## DEPARTMENT OF AGRICULTURE

### Animal and Plant Health Inspection Service

### 7 CFR Part 301

**[Docket No. 97–023–1]**

### Pink Bollworm Regulated Areas

**AGENCY:** Animal and Plant Health Inspection Service, USDA.

**ACTION:** Interim rule and request for comments.

**SUMMARY:** We are amending the pink bollworm regulations by removing all or portions of previously regulated areas in Clay, Crittenden, and Mississippi Counties in Arkansas; Dunklin, New Madrid, and Pemiscot Counties in Missouri; and Dyer and Lauderdale Counties in Tennessee from the list of suppressive areas for pink bollworm. We are also removing Missouri and Tennessee from the list of States quarantined because of pink bollworm. We are taking this action because trapping surveys show that the pink

bollworm no longer exists in these areas. This action is necessary to relieve unnecessary restrictions on the interstate movement of regulated articles from these previously regulated areas. This rule also adds a previously nonregulated portion of Poinsett County in Arkansas to the list of suppressive areas for pink bollworm. This action imposes restrictions on the interstate movement of regulated articles from the regulated area in Poinsett County in Arkansas. This action is necessary to prevent the interstate movement of pink bollworm into noninfested areas.

**DATES:** Interim rule effective May 2, 1997. Consideration will be given only to comments received on or before July 1, 1997.

**ADDRESSES:** Please send an original and three copies of your comments to Docket No. 97–023–1, Regulatory Analysis and Development, PPD, APHIS, Suite 3C03, 4700 River Road Unit 118, Riverdale, MD 20737–1238. Please state that your comments refer to Docket No. 97–023–1. Comments received may be inspected at USDA, room 1141, South Building, 14th Street and Independence Avenue SW., Washington, DC, between 8 a.m. and 4:30 p.m., Monday through Friday, except holidays. Persons wishing to inspect comments are requested to call ahead on (202) 690–2817 to facilitate entry into the comment reading room.

**FOR FURTHER INFORMATION CONTACT:** Mr. Gary Cunningham, Chief Operations Officer, Program Support Staff, PPQ, APHIS, suite 4C09, 4700 River Road Unit 138, Riverdale, MD 20737–1236, (301) 734–8676; or e-mail: gcunningham@hal.aphis.usda.gov.

**SUPPLEMENTARY INFORMATION:**

## Background

The pink bollworm, *Pectinophora gossypiella* (Saunders), is one of the world's most destructive pests of cotton. This insect spread to the United States from Mexico in 1917 and now exists throughout most of the cotton-producing States west of the Mississippi River.

The pink bollworm regulations, contained in 7 CFR 301.52 through 301.52–10 (referred to below as the regulations), quarantine certain States and restrict the interstate movement of regulated articles from regulated areas in quarantined States for the purpose of preventing the interstate spread of pink bollworm.

Regulated areas for the pink bollworm are designated as either suppressive areas or generally infested areas. Restrictions are imposed on the interstate movement of regulated articles from both types of areas in order to prevent the movement of pink bollworm into noninfested areas.

Prior to the effective date of this document, all or portions of Clay, Crittenden, and Mississippi Counties in Arkansas; Dunklin, New Madrid, and Pemiscot Counties in Missouri; and Dyer and Lauderdale Counties in Tennessee were designated as suppressive areas. Based on 2 years of negative trapping surveys conducted by inspectors of Arkansas, Missouri, and Tennessee State and county agencies, and by inspectors of the Animal and Plant Health Inspection Service (APHIS), we have determined that pink bollworm no longer exists in these areas. We are, therefore, removing these areas from the list of suppressive areas in § 301.52–2a.

However, surveys conducted by inspectors of APHIS and by State agencies in Arkansas have established that pink bollworm has spread into a portion of Poinsett County, AR. Therefore, in order to prevent the further spread of pink bollworm, we are also amending the list of regulated areas in § 301.52–2a of the regulations by adding a portion of Poinsett County, AR, as a pink bollworm suppressive area. A description of the area designated as a suppressive area is set forth in the rule portion of this document.

As of the effective date of this document, there will be no areas in Missouri or Tennessee regulated because of the pink bollworm. We are, therefore, also removing Missouri and Tennessee from the list of States in § 301.52–2a quarantined because of the pink bollworm.

## Immediate Action

The Administrator of the Animal and Plant Health Inspection Service has determined that there is good cause for publishing this interim rule without prior opportunity for public comment. Immediate action is necessary to prevent the interstate movement of pink bollworm to noninfested areas of the United States, and is warranted to relieve unnecessary restrictions on the interstate movement of regulated articles from areas where pink bollworm no longer exists.

Because prior notice and other public procedures with respect to this action are impracticable and contrary to the public interest under these conditions, we find good cause under 5 U.S.C. 553 to make it effective upon publication in the **Federal Register**. We will consider comments that are received within 60 days of publication of this rule in the **Federal Register**. After the comment period closes, we will publish another document in the **Federal Register**. It will include a discussion of any comments we receive and any amendments we are making to the rule as a result of the comments.

## Executive Order 12866 and Regulatory Flexibility Act

This rule has been reviewed under Executive Order 12866. For this action, the Office of Management and Budget has waived its review process required by Executive Order 12866.

This interim rule relieves unnecessary restrictions on the interstate movement of regulated articles from certain areas previously regulated for pink bollworm in Arkansas, Missouri, and Tennessee. This interim rule also imposes restrictions on the interstate movement of regulated articles from a portion of Poinsett County in Arkansas in order to prevent the interstate movement of pink bollworm into noninfested areas.

This emergency situation make compliance with section 603 and timely compliance with section 604 of the Regulatory Flexibility Act (5 U.S.C. 601 *et seq.*) impracticable. If we determine that this rule will have a significant economic impact on a substantial number of small entities, then we will discuss the issues raised by section 604 of the Regulatory Flexibility Act in our Final Regulatory Flexibility Analysis.

## Executive Order 12372

This program/activity is listed in the catalog of Federal Domestic Assistance under No. 10.025 and is subject to Executive Order 12372, which requires intergovernmental consultation with State and local officials. (See 7 CFR part 3015, subpart V.)

## Executive Order 12988

This rule has been reviewed under Executive Order 12988, Civil Justice Reform. This rule: (1) Preempts all State and local laws and regulations that are inconsistent with this rule; (2) has no retroactive effect; and (3) does not require administrative proceedings before parties may file suit in court challenging this rule.

## Paperwork Reduction Act

This rule contains no information collection or recordkeeping requirements under the Paperwork Reduction Act of 1995 (44 U.S.C. 3501 *et seq.*).

## List of Subjects in 7 CFR Part 301

Agricultural commodities, Plant diseases and pests, Quarantine, Reporting and recordkeeping requirements, Transportation.

Accordingly, 7 CFR part 301 is amended as follows:

## PART 301—DOMESTIC QUARANTINE NOTICES

1. The authority citation for part 301 continues to read as follows:

**Authority:** 7 U.S.C. 147a, 150bb, 150dd, 150ee, 150ff, 161, 162, and 164–167; 7 CFR 2.22, 2.80, and 371.2(c).

**§ 301.52 [Amended]**

2. In § 301.52, paragraph (a) is amended by removing the words ''Missouri,'' and ''Tennessee,''.

3. Section 301.52–2a is amended as follows:

a. The entry for Arkansas is revised to read as set forth below.

b. The entry for Missouri and all of the material pertaining to Missouri are removed.

c. The entry for Tennessee and all of the material pertaining to Tennessee are removed.

**§ 301.52–2a Regulated areas; suppressive and generally infested areas.**

* * * * *

Arkansas

(1) *Generally infested area.* None.

(2) *Suppressive area.*

*Poinsett County.* T. 12 N., R. 5 E.; Sections 22, 23, 24, 25, 26, 27, 34, 35, and 36.

* * * * *

Done in Washington, DC, this 25th day of April 1997.

**Charles P. Schwalbe,**

*Acting Administrator, Animal and Plant Health Inspection Service.*

[FR Doc. 97–11463 Filed 5–1–97; 8:45 am]

BILLING CODE 3410–34–P

---

## DEPARTMENT OF AGRICULTURE

## Animal and Plant Health Inspection Service

## 7 CFR Part 340

**[Docket No. 95–040–2]**

**RIN 0579–AA73**

## Genetically Engineered Organisms and Products; Simplification of Requirements and Procedures for Genetically Engineered Organisms

**AGENCY:** Animal and Plant Health Inspection Service, USDA.

**ACTION:** Final rule.

**SUMMARY:** This document amends the regulations pertaining to genetically engineered plants introduced under notification and to the petition process for the determination of nonregulated status. The notification amendments allow most genetically engineered plants that are considered regulated articles to be introduced under the notification procedure, provided that the introduction meets certain eligibility criteria and performance standards. The petition amendments enable the Animal and Plant Health Inspection Service to extend an existing determination of nonregulated status to certain additional regulated articles that are closely related to an organism for which a determination of nonregulated status has already been made. We have prepared guidelines to provide additional information to developers of regulated articles and other interested persons regarding procedures, methods, scientific principles, and other factors that could be considered in support of certain actions under the regulations, and anticipate developing other such guidelines when appropriate for other actions. We are also reducing the field test reporting requirements for certain multi-year field trials conducted under permit or notification procedures.

The amendments simplify procedures for the introduction of certain genetically engineered organisms, requirements for certain determinations of nonregulated status, and procedures for the reporting of field tests conducted under notification. We are also changing all references to ''Biotechnology, Biologics, and Environmental Protection'' to ''Animal and Plant Health Inspection Service'' to reflect an internal reorganization within the Agency.

**EFFECTIVE DATE:** June 2, 1997.

**FOR FURTHER INFORMATION CONTACT:** Dr. John Payne, Director, Biotechnology and Scientific Services, PPQ, APHIS, 4700 River Road Unit 98, Riverdale, MD 20737–1237; (301) 734–7602. For technical information, contact Dr. Michael Schechtman, Domestic Programs Leader, Biotechnology and Scientific Services, PPQ, APHIS; (301) 734–7601. Guidelines for extensions to determinations of nonregulated status are available on the Internet at the APHIS World Wide Web site, http://www.aphis.usda.gov/bbep/bp/, or by mail from Ms. Kay Peterson at the address listed above.

**SUPPLEMENTARY INFORMATION:**

### Background

The regulations in 7 CFR part 340, referred to as the ''regulations,'' pertain to the introduction (importation, interstate movement, and release into the environment) of genetically engineered organisms and products that are derived from known plant pests (regulated articles). Before introducing a regulated article, a person is required under § 340.0 of the regulations to either (1) notify the Animal and Plant Health Inspection Service (APHIS) in accordance with § 340.3 or (2) obtain a permit in accordance with § 340.4. Introductions under notification must meet specified eligibility criteria and performance standards. Under § 340.4, a permit is granted when APHIS has determined that the conduct of the trial, under the conditions specified by the applicant or stipulated by APHIS, does not pose a plant pest risk.

On August 22, 1995, APHIS published in the **Federal Register** a proposed rule on Genetically Engineered Organisms and Products; Simplification of Requirements and Procedures for Genetically Engineered Organisms and Products (60 FR 43567–43573, Docket No. 95–040–1). This rule proposed to amend the regulations to allow the introduction under notification procedures of any plant species that is not listed as a noxious weed under regulations in 7 CFR part 360, and for release in the environment, is not considered a weed in the area of the proposed release into the environment. In addition, APHIS proposed to increase the range of virus resistance modifications allowable under notification. APHIS also proposed to amend its administrative procedures by discontinuing the requirement that States in every case provide concurrences for notifications for interstate movement prior to APHIS acknowledgment, and to simplify the reporting requirements on the performance characteristics of regulated articles in field trials conducted under permit or notification.

APHIS further proposed to amend the regulations pertaining to petitions for determinations for nonregulated status in § 340.6 to allow the extension of a previously issued determination of nonregulated status to certain additional regulated articles that are closely related to an organism that was determined not to be a regulated article in the initial determination.

To provide information regarding procedures, methods, practices, or protocols, APHIS indicated its intention to prepare guidelines relating to such considerations.

We solicited comments concerning our proposal for 60 days ending October 23, 1995. During the designated comment period, APHIS received a total of 50 comments on the proposed amendments from industry, universities, State departments of agriculture, science policy organizations, environmental groups,

industry organizations, professional societies, consumer organizations, individuals, and a university cooperative extension service office. A general discussion of the comments appears below, followed by a section-by-section response to comments and an explanation of modifications made.

*Summary and Analysis of Comments*

Over 60 percent of the comments expressed support for the proposed amendments, while about one-third opposed any change in the current level of oversight for genetically engineered organisms. Several commenters, expressing support for the proposed amendments, made detailed comments and suggestions concerning specific provisions and terms used in the proposed amendments. A major concern expressed by commenters in opposition to the proposed simplification of requirements was the potential for an increased risk to the environment from certain transgenic plants, particularly those with wild or weedy relatives. APHIS has carefully considered all the comments, suggestions, requests for clarification, and concerns. Several modifications have been made to the proposed amendments in response to the comments. Before providing detailed responses to comments on specific provisions of the proposed amendments, and an explanation of the modifications made in consideration of these comments, however, APHIS would like to respond in a general way to concern about the potential for increased risk for field trials conducted under notification for certain new transgenic plant species. The comments raising concerns in this regard presuppose that the safety standards enforced by APHIS under its notification procedures are different from those under its permitting procedures. This presupposition is incorrect. The performance standards for field trials under notification procedures, as provided in § 340.3(c), establish the same standards for confinement of regulated articles that have been applied to field trials conducted under permit, except that in the latter the Agency receives and evaluates detailed information on the methodology used to ensure confinement of the regulated articles for each trial. The notification option, which has, to date, been used only with respect to field trials involving six crop species, is one additional means of meeting those standards. More detailed responses to specific comments follow.

Comments on Proposed Changes to Notification Eligibility Criteria (§ 340.3(b))

Approximately half of all comments specifically supported the proposal to revise § 340.3(b)(1) to extend the notification option to any regulated article that is a crop species not listed as a noxious weed in regulations at 7 CFR 360 under the Federal Noxious Weed Act (7 U.S.C. 2801 *et seq.*) and that meets the other eligibility criteria at §§ 340.3(b)(2) through 340.3(b)(6), provided that the regulated article being considered for release into the environment is not considered by the Administrator to be a weed in the area of release into the environment. A representative comment noted that field testing of a wide variety of different types of genetically engineered plants over the past decade has confirmed that such tests can be carried out safely. It further expressed the opinion that the notification system, using performance standards, has worked well since its establishment in 1993.

Another commenter pointed out the importance of simplified procedures to aid the development of improved tree varieties that are propagated as rootstocks under conditions in which they cannot reproduce, produce pollen, or flower, or that are seriously endangered by virulent diseases such as chestnut blight. APHIS agrees with these comments. APHIS notes the experience alluded to in field trials to date under permit with several tree species whose confinement has been assured because the plants were sexually immature, or by physical or biological means. This evidence of safe trials indicates that trials with these species can be conducted safely under notification procedures, and the conduct of such trials should be facilitated by the availability of notification procedures.

About a third of the comments opposed the proposed change to § 340.3(b)(1). In general, comments that indicated specific reasons for opposition to the proposal focused on some or all of the following three issues: the appropriateness of performance standards as regulatory tools for certain field trials; the wide range of species that would be eligible for notification procedures; and the inadequacy of available knowledge about certain aspects of the biology of the plant species or its relatives. Comments pertaining to each of these general topics will be discussed in greater detail below.

Several commenters expressed concern that, by largely shifting oversight for many organisms from permitting to notification procedures, oversight would be inappropriately decreased and compliance could be compromised. One commenter in this regard expressed the view that performance standard-based regulations are typically more difficult to enforce than traditional design standard-based regulations. In response to these concerns, we agree that there is a distinction between performance standards and more prescriptive design standards, and it might in fact be easier, in some instances, to determine whether a design standard, as opposed to a more general performance standard, is being followed. We disagree, however, with the assertion that performance standards are inappropriate when high levels of compliance are desirable. High levels of compliance with a performance standard can be achieved if procedures exist to enable an applicant to meet the standard, and the parameters that determine whether a performance standard is or is not met are clear and well understood.

In the case of implementation of the performance standards under § 340.3(c), it has been useful to provide to individuals seeking to introduce regulated articles derived from any of the six crops listed under § 340.3(b)(1)(i) examples of confinement procedures that would enable the performance standards to be met. Such examples are not prescribed procedures that must be followed, but rather are indications of options that can be used to achieve the required confinement standard for each of the crop species. APHIS has provided such examples in its User's Guide for Introducing Genetically Engineered Plants and Microorganisms (APHIS Technical Bulletin No. 1783)(referred to hereinafter as User's Guide), which is provided upon request to any interested individual. APHIS believes that the same level of clarity can be achieved for other crop species and that providing additional information to responsible persons will remove uncertainty about the ability to comply with the performance standards in particular cases.

APHIS intends that there be clear information available to responsible persons to aid them in meeting the performance standards. To provide additional guidance of this sort, particularly in regard to the requirements of performance standards in §§ 340.3(c)(5) and 340.3(c)(6), APHIS has developed additional information that illustrates the type of reasoning that would apply in designing an appropriate protocol for other crop species based on their biology. The

discussions of biological factors relevant to issues of confinement and persistence for several examples of plant species not included in the original list of crops at § 340.3(b)(1)(i) will be included in a revised User's Guide. The examples will be accompanied by an expanded discussion of the biological factors that need to be considered to evaluate the adequacy of confinement protocols based on the biology of the particular plant species in question.

APHIS has provided advice to responsible persons in the past on whether particular protocols for field tests of the six crops listed at § 340.3(b)(1)(i) meet performance standard requirements. The Agency anticipates providing similar advice upon request for protocols for any other plant species eligible under § 340.3(b)(1). It remains the duty of the responsible person to determine the specific procedures that will need to be used to meet the performance standards and to certify that those standards are being met.

In further response to the commenter, APHIS would stress that the performance standards themselves must not be confused with other mechanisms to monitor or document compliance with those standards. Since the original publication of 7 CFR 340 (52 FR 22892–22915, June 16, 1987), APHIS has performed field inspections for many field trials. Initially, when only permitting procedures were available, inspections were performed exclusively on field trials under permit. Since 1993, many inspections have also been performed on trials that have gone forward under notification procedures. Inspections have often been conducted with the participation of State regulatory officials. These inspections have demonstrated to the Agency that applicants have been able to comply extremely well with either the performance standards or specified permit conditions.

APHIS considers as erroneous the assumption that oversight under permitting procedures provides greater assurance of ''safety'' than oversight under notification procedures. Compliance with either specified permit conditions or performance standards under notification procedures requires the cooperation of all involved in the conduct of the field trial. The outcome of either permitting or notification procedures is attainment of essentially the same level of confinement. No change to the regulations is made in response to this comment.

Several commenters expressed the view that the proposed expansion of eligibility requirements for notification was too broad and that permitting procedures should remain in force for a regulated article that has wild relatives in the United States with which the plant can interbreed. Genetically engineered varieties of crops such as sunflowers, radishes, rice, and rapeseed, which can hybridize with wild relatives growing in the United States, were singled out as special concerns, as were genetically engineered varieties of perennial landscaping species and largely undomesticated species such as forest trees. In response to these concerns, APHIS agrees that there are important differences in the biology of different crop species that will affect the ability of confinement procedures to achieve the required performance standard. These biological factors will be relevant when a protocol intended to meet the performance standards for a particular field trial is being designed. Such factors include, for example, the lifespan of the plant species in the field, dormancy of its seeds, pollen survival and dispersion, the presence of sexually compatible plants that are available to receive pollen in the vicinity of the trial, the ability of the plant to be vegetatively propagated, and climatic conditions. We note, however, that these commenters appear to presume that all gene transfers pose risks, even those that only result in progeny that do not persist in the environment (in accordance with the requirements of performance standards in §§ 340.3(c)(5) and 340.3(c)(6)). We believe that this is not the case. Indeed, it would be inaccurate to assert that any trait that is transferred from a transgenic plant to a wild relative, even with the potential of persisting in a population of that wild relative, will necessarily pose a risk per se. The environmental analysis to address the effect of a particular trait on a recipient population, as required in the consideration of certain petitions for the determination of nonregulated status, would likely involve case-by-case analysis based on the trait, the characteristics of the recipient population, and other factors.

The inference of previous commenters that field tests with certain plant species will require more stringent confinement procedures to comply with the performance standards is, however, clearly correct. Certain crop species are not highly domesticated, and some, such as strawberries, are sometimes grown in areas where interfertile wild relatives are abundant. In some instances these wild relatives are routinely found within fields of the cultivated crop. In such instances, it may be necessary to prevent flowering or to apply physical methods that contain pollen flow. In some instances, the responsible person may deem a particular test site unsuitable for a particular field trial based on such biological considerations. We would, however, note that field trials of many species of trees, which were raised as a concern, can easily be safely performed over a period of several years under notification procedures, based on the fact that the trees do not become sexually mature for a considerable, and well-established, period of years. Other tree species can be effectively isolated from wild populations by the appropriate choice of test location or by use of physical methods for confinement of pollen. APHIS does not believe, therefore, that the biological differences discussed in these comments provide adequate justification for limiting the application of performance standards to a smaller set of host organisms than was in the proposed rule. However, APHIS recognizes that there are two features of biology of trees (and, in some instances, of other crops grown as perennials) that merit specific consideration in a regulatory context. Field tests involving trees may be several years in duration, and such trials may result in unexpected exposures of nontarget organisms in the environment of the test site if continual vigilance as to adherence to performance standards is not maintained. Furthermore, the regulated articles may reach sexual maturity considerably after initial planting. It may well be, therefore, that the procedures utilized to ensure reproductive confinement of the regulated articles in the first year of a field trial may prove inadequate at a later time in the trial. To emphasize the level of continual vigilance that is required to ensure that all relevant biological factors are taken into account, APHIS will require that all field trials under notification procedures that are to be greater than one year in duration be renewed annually. This will be accomplished by adding the following sentence at the end of § 340.3(e)(4):

> Such acknowledgment will apply to field testing for one year from the date of introduction, and may be renewed annually by submission of an additional notification to APHIS.

APHIS stresses that it views the requirement for compliance with a performance standard as a stringent one that requires responsible persons to take a level of care equal to or greater than that under permitting procedures. We expect that, if a responsible person has any question about whether he or she

can comply with the performance standards for the introduction of a regulated article, that person must either apply for a permit under § 340.4 or consult with APHIS; and that States will continue to provide input to APHIS, particularly if they have any concern about whether the performance standards can be complied with in a given field trial.

Another commenter that opposed the proposed extension of notification procedures asserted that APHIS' 1993 final rule (58 FR 17044–17059, March 31, 1993) establishing notification procedures for field trials of certain regulated articles, particularly the six crop species listed in § 340.3(b)(1)(i), was based primarily on a USDA finding that the six listed crop species posed a negligible risk of gene flow to wild relatives in the United States. The commenter argued that in many cases, scientists do not know the extent to which U.S. crops interbreed with wild relatives nor the extent to which wild relatives exist in areas where crops are grown, and further recommended that case-by-case risk assessments under its permit procedures of all U.S. crops with interbreeding wild relatives in this country should continue to be required until the Department has a comprehensive database of information addressing relevant biological factors for these crops.

In response to this comment, APHIS disagrees with the assertion that the primary basis for our final rule establishing the notification option was an Agency determination that there was negligible risk of gene flow from transgenic derivatives of the six listed crop species to wild relatives. Our action was based on accumulated experience showing that the six listed crop species, which were those crops for which the greatest number of field trials had been performed in the United States to that time, could be safely field tested under permit, and on our recognition that the conditions imposed under permit formed the basis for adequate confinement measures under performance standards. In response to a specific request by a commenter, APHIS did provide in its final rule additional evidence that the potential for gene flow from the six listed crop species to wild relatives in the United States was negligible regardless of whether the performance standards were applied. Nevertheless, the Agency continues to believe that the performance standards themselves adequately address the issue of gene flow. APHIS acknowledges that insufficient data with respect to interbreeding potential or the locations of populations of wild relatives for some plant species could affect the appropriateness of design protocols for particular field trials. These considerations would be a necessary part of the responsible person's analysis of what would be required to comply with the performance requirements under § 340.3(c). It may be the case that in some instances, based on the realization that existing information is inadequate, adherence to the performance standards might require, for example, that flowering of the regulated article be prevented or that physical means such as bagging be utilized to prevent pollen flow from the regulated article. As indicated previously, APHIS will consult with responsible persons upon request regarding compliance with the standards in individual instances and is also preparing other useful information for inclusion in its User's Guide. Nonetheless, APHIS believes that the performance standards themselves adequately address the concerns raised by the commenters. No change to the regulations is made in response to this comment.

The commenter does raise a point that is relevant to another section of the rule, however. Incomplete data regarding compatibility with relatives or the presence of interbreeding populations of related species may dramatically affect the ability to reach a subsequent determination of nonregulated status for certain regulated articles, and this should be noted by any persons who may consider submitting such petitions. For traits potentially related to plant survival, such as disease or stress resistance, information of this kind will often be important to an analysis of the potential for plant pest risk under the petition process at § 340.6.

Several commenters disputed APHIS' assertion in the proposed rule that the Agency has gained considerable experience with field testing under notification and permitting procedures. These comments, in general, questioned how much experience had really been gained, in view of the fact that most of the permits have been granted in the last few years; whether the long-term effects of releases had really been determined; and whether the Agency had yet obtained any ''hard data'' to assess specific environmental impacts.

In response to these comments, APHIS believes that its statements regarding accumulated experience remain correct. While it is true that the majority of field trials of regulated articles have been conducted in the last two years, all evidence obtained to date, including that from monitoring reports submitted to the Agency by responsible persons overseeing the tests, indicates that the trials have been conducted safely, and that there has been no reason to believe that any hypothetical ''long-term'' impacts have arisen or are likely or foreseeable as a consequence of the conduct of any field trial in accordance with this final rule. The request for ''hard data,'' which APHIS interprets to mean ''data derived from experiments designed specifically to address particular safety concerns,'' ignores a great deal of highly relevant data, some of which may be empirical in nature, on the behavior of the test plants as determined by individuals expert in the behavior of the plant species. Moreover, ''hard data'' has been requested and obtained by the Agency in some instances, when deemed material to consideration of a petition for determination of nonregulated status for a regulated article.

One commenter inquired whether an applicant would be able to request a permit for which an environmental assessment is written for a regulated article that might qualify for notification procedures. APHIS agrees that field trials that would qualify for notification procedures could be given permits upon request. However, as indicated in APHIS' National Environmental Policy Act (NEPA) Implementing Procedures, which were published on February 1, 1995 (60 FR 6000–6005) and codified at 7 CFR part 372, permitting and acknowledgment of notifications for confined field releases of genetically engineered organisms have been categorically excluded from the requirement to prepare environmental assessments or environmental impact statements. There are two relevant exceptions indicated in those procedures. Section 372.5(d)(1) provides for preparation of an environmental assessment or environmental impact statement ''When any routine measure, the incremental impact of which, when added to other past, present, and future actions (regardless of what agency or person undertakes such actions), has the potential for significant environmental impact.'' Section 372.5(d)(4) provides for the preparation of such analyses ''When a confined field release of genetically engineered organisms or products involves new species or organisms or novel modifications that raise new issues.'' The decision as to whether either or both of these exceptions to the categorical exclusion applies will be made by the Administrator.

One commenter asked whether the proposed changes to notification procedures would in effect require a responsible person to submit requests

for notification more than 120 days in advance of a desired field trial in order to give the Administrator, APHIS, time to determine whether the plant species in question is considered a weed in the area of the proposed introduction, and to give the responsible person time to submit a permit application if notification procedures are deemed not to apply. APHIS believes that the scenario described will rarely apply for plant species that are commonly cultivated. In most instances, there will not be any uncertainty beforehand as to whether a particular species is a weed in the area around the site of a proposed introduction. If an applicant has any uncertainty regarding the weed status of a particular species around the site of a proposed introduction, that applicant should consult with the Agency as early as possible to enable the agency to obtain the necessary information early enough to prevent undesirable delays. It should be pointed out that applicants need to take into consideration the presence of sexually-compatible populations of the same plant species, even if not weedy, in the area of a proposed test site in the development of test protocols that would meet the performance standards under § 340.4.

One commenter suggested that the phrasing of the new eligibility criterion under proposed § 340.3(b)(1) would require that notification procedures apply for introductions of all non-weed plant species. APHIS believes that this comment is incorrect. The eligibility criterion, as written, applies only to regulated articles, as defined under § 340.1.

Less than half of all comments specifically addressed the proposed revision of eligibility criterion under § 340.3(b)(5), which would extend the existing eligibility criterion to allow introductions under notification procedures of plants containing genetic sequences from plant viruses that are noncoding regulatory sequences of known function, or that are sense or antisense genetic constructs derived from viral genes from plant viruses that are prevalent and endemic in the area where the introduction will occur and that infect plants of the same host species, and that do not encode a functional noncapsid gene product responsible for cell-to-cell movement of the virus.

One comment from a scientific society expressed the view that the proposal was based on sound scientific data dealing with the safety of virus-resistant plants. Another comment supported the proposed extension, but recommended in addition that the eligibility criterion not require that any viral gene be derived from a plant virus that is prevalent and endemic in the area where the introduction will occur. The rationale provided for this recommendation was that when field trials are performed under controlled circumstances, the crop performance standards would be sufficient to prevent the unintentional dissemination of the virus by the introduced viral component, which is not itself capable of plant infection. Also, it was indicated that the opportunity for recombination would be less in an isolated field with no homologous viruses than in an area with like viruses.

APHIS disagrees with the commenter's rationale for further changes to the proposal. The performance standards are designed to prevent persistence of the regulated article or its progeny, and do not specifically address dissemination or persistence of other organisms, such as viruses or their vectors.

Approximately a quarter of the comments opposed the proposed revision to the eligibility criterion in § 340.3(b)(5). These comments raised some or all of the following four issues: risks of gene flow to related plant species; risks of synergistic effects when the regulated article is infected with plant viruses other than the one from which its viral component was derived; risks that new viral strains will be produced; and the supposed paucity of empirical data available to support the proposed revision.

One commenter expressed concern that movement of genes of viral origin from regulated articles to related plant species could occur when plants containing such genes are introduced under notification, which could have significant implications for both agroecosystems and natural ecosystems, as viral transgenes transferred to wild plant populations could result in new or worse weeds in farmers' fields or alter the genetic diversity of natural ecosystems.

APHIS disagrees with these comments. APHIS believes that it has addressed the issue of gene flow from regulated articles to other plants in its general discussion of the appropriateness of the performance standards for confinement of field trials.

The issues with respect to potential synergistic effects and/or recombinational events revolve around potential interactions between the regulated article and other viruses in field settings. Before discussing these phenomena in detail, however, APHIS notes that during field testing of virus resistant plants (whether transgenic or conventionally bred), researchers routinely make efforts to exclude unwanted viruses to which the test plants are not resistant (unless they are specifically investigating an effect such as synergy). This is done because infection of plants with other viruses causes additional disease symptoms that make comparative evaluation of the desired disease resistance phenotypes of the test lines (the transgenic lines) with controls (the nontransgenic parent lines) difficult or impossible. The need for exclusion of other viruses during field trials with vegetatively propagated plants (e.g., potatoes) is even more severe. With such plants, infection with other viruses not only contaminates the experimental plants but results in infection of all clonal progeny. Infected plants then need to be destroyed, or the unwanted virus must be eliminated via tissue culture, a time-consuming and expensive procedure. For any crop, if an unwanted virus is seed transmitted, progeny lines also become infected, which can affect an entire breeding program. Thus, researchers have long recognized the importance of minimizing the presence of unwanted viruses from field tests of virus resistant plants. Minimizing unwanted viruses in a test plot minimizes the opportunity for recombination or synergy.

The concerns raised over the potential for synergistic effects between viral genes in the regulated article and other viruses that may infect the plant allude to the phenomenon that, when two viruses simultaneously infect a plant, disease symptoms can be more severe than when either of the viruses alone infects the plant. Such synergistic infections can often result in severely diseased, unsalable crops under current agricultural production. APHIS believes, however, that such synergistic interactions are relatively rare in mixed viral infections. APHIS estimates that more than 2000 plant viruses have been identified worldwide. Information gathered for APHIS on the occurrence of synergistic interactions by Dr. Vicki Vance, University of South Carolina, on file in the administrative record, identified no more than 25 synergistic viral interactions. Moreover, because synergy, unlike recombination, is not related to the potential for creation of new viruses, the effects of synergy may in effect be considered to be agronomic, rather than environmental. Investigation of the potential for synergy may be a part of the evaluation of a new crop variety undergoing agronomic testing. Were synergistic interactions manifested by a transgenic crop during field testing, severe infection would result, and the plants or plant lines would likely be

destroyed because they would have no use in a breeding program. These effects would be limited to the test plants.

Three other independent reports prepared in different countries and published in 1995 and on file in the administrative record address the subject of synergy and viral resistant transgenic plants:

1. ''Transgenic virus-resistant plants and new plant viruses,'' a report prepared by the American Institute of Biological Sciences (AIBS), based on a workshop convened by AIBS and sponsored by the USDA;

2. ''Risks to the Agricultural Environment Associated with Current Strategies to Develop Virus Tolerant Plants Using Genetic Modification,'' written by Henry, C. M., Barker, I., Pratt, M., Pemberton, A. W., Farmer, M. J., Cotten, J., Ebbels, D., Coates, D., and Stratford, R., for the United Kingdom Ministry of Agriculture Fisheries and Food; and

3. ''Transgenic plants expressing viral genes: Issues related to field releases,'' written by Rochon, D. M., Ellis, P. E., Martin, R. R., and Sanforn, H., for Agriculture and Agri-Food Canada.

All these reports support APHIS' conclusions that viral synergies are rare and would pose only transitory agronomic concerns, but not environmental risks. Agronomic characteristics such as disease susceptibility are routinely evaluated during agronomic testing. On the basis of all the information presented, therefore, APHIS believes that the potential for viral synergies when regulated articles are introduced under notification will pose no concerns different from those arising under traditional agricultural breeding and practice.

In further response to the commenters, the issue with respect to recombination centers around the potential to create new plant viruses when transgenic virus resistant plants are infected by other plant viruses. The term ''recombination'' is typically defined as an exchange of nucleotide sequences between two nucleic acid molecules. Such exchanges between genomes result in heritable, permanent change. While recombination is a common process, which is responsible in nature for much of the observed variation between individual members of the same species, a variety of factors affect the appearance and survival of recombinant types. In all experiments that have been performed to date with plant viruses, recombinant types have been observed only when transgenic plants, containing viral sequences and susceptible to the virus from which those sequences are derived, are infected with a defective but replication-competent parental virus type under a strong selection for production of recombinant virus. Recombination between two plant viruses under natural field conditions has never been reported and may be sufficiently rare that it may only be observed to occur on an evolutionary time scale. There are no published reports demonstrating recombination between a virus-resistant transgenic plant and a nondefective and unrelated plant virus. Resistance to an infecting virus would prevent or at least partially inhibit replication of that virus and replicated progeny viruses might not therefore be available for recombination with the resident viral transgene. The reports cited above on transgenic plants expressing viral genes provide more detailed discussions on the factors affecting recombination, the detection or survival of recombinants, and provide additional reference sources.

The likelihood that a statistically rare recombinational event will occur depends on, among other things, sample size. Typically, the first field trials of regulated articles containing genes from plant viruses that have not yet been demonstrated to confer virus resistance on the host plant are small, i.e., with single genotypes representing perhaps 0.5 acre or less. Lines that are selected for testing on larger plots are generally those that have been shown to be resistant to infection by the parental virus under field conditions during prior small scale field testing. In fact, greater than 95 percent of the individual field tests of virus resistant plants that have been conducted to date under permit or notification procedures have been small, under 5 acres in area. The larger field trials that have been performed to date have involved lines that have been subsequently deregulated (e.g., Asgrow's ZW–20 squash) or other crop lines that are relatively far along in their agronomic testing. All such varieties have already been demonstrated to be resistant to viral infection, reducing the likelihood of recombination with the related virus.

As stated above, if an unwanted virus infects the transgenic plant and replicates, recombination theoretically could occur. The potential for recombination will be limited by efforts to exclude unwanted viruses from field tests. Additional constraints in proposed eligibility criterion § 340.3(b)(5) for viral sequences that meet notification are that the inserted viral sequences come from a viral strain that infects the recipient plant and that the virus be widely prevalent in the area where the field test is to be performed. If these limitations apply, the RNA's of concern that could potentially recombine (the viral transgene and the unwanted virus) would be nucleic acids that would have already had the potential to interact and recombine in nature if the two viruses naturally infected the same plant and were located within the same plant tissues.

APHIS believes that scientific evidence, routine agricultural practices, and the other restrictions contained under revised § 340.3(b)(5) make it highly unlikely that any new virus will arise as a result of field testing of a transgenic virus resistant plant under notification procedures. APHIS also believes that in the unlikely event that a new virus should arise, standard practices that are used to control new viral diseases that are detected in agricultural settings would also be adequate to address any new virus. Again, two of the above-cited reports that addressed this general subject reached conclusions similar to those of APHIS. In a report to Agriculture and Agri-Food Canada, Rochon et al. (1995) conclude, ''It is likely that current means of detecting and controlling new diseases in this country would be adequate to control any new virus resulting from recombination between a transgene and another virus.'' The AIBS report concludes by stating, ''With or without the use of transgenic plants, new plant virus diseases will develop that will require attention.'' No changes to the regulations are made in response to these comments.

Several commenters expressing opposition to the proposed revision to § 340.3(b)(5) asserted that there is insufficient empirical data for its justification. In response to these comments, we understand the desire for additional experiments specifically designed to increase understanding of the mechanisms involved in virus resistance, to measure the frequency at which certain interactions between regulated articles and infecting viruses occur, and to examine the effects of those interactions on virus populations. We agree that such information will probably be scientifically interesting. It may also be potentially useful for resolving uncertainties that may arise for specific crop-gene combinations when, eventually, approval is sought to grow the regulated articles under routine agricultural conditions as opposed to under performance standards (i.e., when a petition is submitted to APHIS for a determination of nonregulated status). A statement in the AIBS report (1995) previously cited recognizes this fact: ''More research is

needed to explain these mechanisms and to assess the environmental and agricultural risks that might be presented by the commercialization of transgenic virus-resistant crops.''

We do not agree with the comment that additional data of these types are needed to justify the proposed modification to § 340.3(b)(5) for field trials under notification procedures. Such arguments, APHIS believes, ignore the weight of experience with conventionally bred and conventionally cross-protected crop varieties (a cross-protected variety being one made immune or resistant to a severe strain of a virus by infecting the variety with a mild strain of the virus), and take note of neither the performance standards under § 340.3(b) nor the agricultural practices routinely used to minimize infection of test crops or to control infections.

One commenter suggested that APHIS mischaracterized the results of the AIBS Workshop on Transgenic Virus-Resistant Plants and New Plant Viruses. The comment asserted that a discrepancy exists between the proposed regulations (which would extend eligibility to all viral genes derived from certain viruses, apart from those genes encoding noncapsid movement proteins) and the written proceedings, which in the view of the commenter indicated that any as yet undiscovered viral genes would pose novel risks, with the implicit implication that such genes should not be eligible for APHIS' notification procedures.

APHIS disagrees with this commenter's interpretation of the workshop proceedings. The relevant phrase in the AIBS report, which contains the only mention of ''known'' genes, is, ''The participants agreed that the risk considerations for coat protein (currently on the list for notification) are the same as those for other known viral genes . * * *'' APHIS believes that the report does not attempt to indicate that other genes would pose new risks, but rather that the participants at the workshop only discussed the potential risks of genes for which scientific information was at hand. APHIS believes that enough information has been established to date about the function of plant virus genes so that whole new categories of genes that would raise new concerns other than those addressed at the workshop are unlikely to appear. However, should any information arise that would suggest that notification procedures are not appropriate for a specific, as yet undiscovered class of viral genes, APHIS would of course act to ensure that appropriate safety requirements for field testing applied to such trials.

The comment also noted that the proposal would extend notification procedures to field trials of any size, while the report only discussed risk considerations for small-scale trials, i.e., those under 10 acres. APHIS agrees that the workshop participants, in discussing specific categories of genes in accordance with questions distributed to participants to help focus discussions, specifically addressed small scale field trials. However, in their discussions of the various types of viral interactions (such as recombination and synergy) that formed the broader issues at the heart of the workshop, no specific size-related concerns were raised. Moreover, as was discussed previously, preliminary field trials with new crop lines carrying virus-derived genes are generally conducted on a very small scale until it can be demonstrated that the new lines exhibit the desired virus-resistant phenotype. When this phenotype is manifested, the likelihood that the viral transgene could recombine with a related infecting virus is further limited. Again, however, the general concerns raised are concerns that may become relevant on a case-by-case basis when the Agency considers petitions for determination of nonregulated status for specific virus-resistant regulated articles. No change is made to the regulations in response to this comment.

Comments on Proposed Simplifications to Paperwork Requirements by State Regulatory Officials (§ 340.3(e)(1))

About one-fifth of all comments specifically addressed the proposal to eliminate the requirement that States actively provide to APHIS concurrence on interstate movements of regulated articles under notification. All but one of the comments were in favor of the rule as proposed. Each of those, however, suggested that the proposal needed some additional clarification: either that States' roles in oversight over other aspects of the notification process should be lessened, or that the notification process for interstate movement should be made ''generic'' by indicating a master list of potential terminal destinations to which transgenic seed might be shipped. Several comments indicated that State involvement should be eliminated entirely.

In response to these comments, APHIS believes that the notification process for interstate movement is not burdensome, that State notification and involvement in that process has been, and continues to be, useful, and that it is appropriate that States be made aware that shipments of specific regulated articles may be destined to enter. States should be offered the opportunity to consider any notifications in view of local requirements. APHIS further believes that a system for generic identification of sites to which transgenic seed may be shipped might not provide States with adequate opportunities to address these considerations.

One State commenter indicated strong opposition to removal of the requirement for review and concurrence by affected States. The comment asserted that notification without the review opportunity would not be acceptable. APHIS believes that this comment reinforces the view of other comments, in favor of the proposed rule, that indicated the need for additional clarification. APHIS believes that the proposed regulation was not sufficiently clear in indicating that States would be notified and that those States that wish to continue to review notifications for interstate movement would be free to do so. Furthermore, the important role that States have played in considering local factors with respect to field trials will remain unchanged. (These field test factors, as indicated by one State Department of Agriculture, include review of proposed uses of challenge organisms, the planting of species in areas in which host-free periods exist for the crop, the planting of crops in protection districts where specific state regulations restrict planting, and the planting of plant material for which there are established specific quarantines.) In response to comments, APHIS is revising § 340.3(e)(1) of the regulations to clarify its intent as follows:

> APHIS will provide copies of all notifications to appropriate State regulatory official(s) for review within 5 business days of receipt. Comments to APHIS from appropriate State regulatory officials in response to notifications for interstate movement of regulated articles will not be required by APHIS prior to acknowledgment, although States may provide their reviews to APHIS at their discretion.

Comments on Proposed Changes to Regulations for Petitions for Determination of Nonregulated Status and on Proposed Use of Guidelines To Provide Information to the Public (§ 340.6(e) and Footnotes Added to the Ends of the Headings of §§ 340.3, 340.4, 340.5, and 340.6)

Two related portions of the proposed rule, i.e., the proposed changes to regulations for petitions for determination of nonregulated status and the proposed use of guidelines to

provide information to the public on various issues, were frequently discussed together in comments. APHIS will discuss the comments received on these two topics together.

A majority of comments that specifically addressed the expansion of determinations of nonregulated status supported the concept of relating the extension of a determination of nonregulated status to a determination of nonregulated status for a closely related antecedent organism. One comment stated that the slight differences in closely related varieties are no more significant than the differences that occur between the products of traditional plant breeding.

Several commenters also noted the value of the increased flexibility provided by the proposed changes, in allowing for desirable outcomes such as greater innovation, reduced paperwork, less redundant experimentation, and promoting the rapid development of the best new crop varieties. One commenter, in pointing out that progress through the development of new transformants would be encouraged under the proposed changes, noted that the current system encourages the development of genetically engineered crops using a trait from a single progenitor line, and that such crops are genetically more narrow and less adaptable than crops developed from several lines derived from various insertions of the same trait. APHIS agrees with these comments.

The comments opposed to the proposed extension of determinations of nonregulated status to plants closely related to antecedent organisms generally expressed the view that a ''huge loophole'' would be opened up under which risk assessments of potentially dangerous new varieties would not be made. One comment suggested that companies would be able to reengineer particular plants to contain genes that pose ecological concerns and then claim that the new plants are, indeed, ''closely related.''

APHIS disagrees with these comments. The basis for extending a determination of nonregulated status to additional closely related regulated articles will be a demonstration by the applicant that the risk assessment that was developed for the antecedent organism is in fact adequate to address any potential plant pest risk issues for the regulated article. While the guidelines developed by APHIS will provide examples of types of differences between regulated article and antecedent organism that the Agency believes are unlikely to raise such new issues, it will be the burden of the applicant to provide data, including data from field tests, to demonstrate this contention. Moreover, in the proposal, any action by the Agency to extend a determination of nonregulated status would not take effect for 30 days. This interval was deliberately incorporated into the proposed rule to allow an opportunity for any new plant pest risk issues that might have been overlooked in APHIS' review of the applicant's requests to be identified. No change to the regulations is made in response to these comments.

Another commenter, expressing the desire that APHIS proceed cautiously with respect to this proposed action, noted that differences in gene insertion sites, copy number, and genetic background have the potential to make two very similar sounding varieties significantly different in phenotype. APHIS agrees that phenotypic differences may arise in these ways. However, the Agency believes that the differences that may result would likely be of the magnitude observed through traditional crop breeding. In any event, the phenotype of the regulated article will need to be specifically described in any request for an extension of an existing determination of nonregulated status. On a case-by-case basis, APHIS will consider whether observed phenotypic changes raise any issues that were not adequately addressed in the determination of nonregulated status for the antecedent organism, and the Agency's decision will be announced to the public 30 days before it takes effect.

One commenter objected to this portion of the proposed rule on the grounds that commercialization of genetically engineered plants raises large-scale issues not addressed by small-scale field testing, and, implicitly, that these issues would not be adequately addressed when requests for extension to existing determinations of nonregulated status are considered. APHIS disagrees. We reiterate, as was indicated in response to comments in the final rule establishing the notification and petition options, that we believe that all relevant issues are carefully considered in APHIS analyses of petitions for determination of nonregulated status. It should further be noted that other agencies outside USDA, notably the Environmental Protection Agency and the Food and Drug Administration, also exercise regulatory responsibilities for assuring the safety of certain agricultural products developed using biotechnological techniques. The framework of agency authorities and responsibilities, under which more than one agency often has a designated regulatory role in assuring the safety of a particular product was set forth by the White House Office of Science and Technology Policy as the Coordinated Framework for the Regulation of the Products of Biotechnology (51 FR 23303–23350, June 6, 1986).

Two commenters addressed APHIS' discussion of the use of guidelines as part of regulatory oversight. One comment stated that guidelines should not be used as a substitute for rulemaking, and that the practice of issuing guidelines should be codified in the regulation and not relegated to the status of a footnote in the preamble of the proposed regulation.

Both commenters requested that APHIS codify the use of guidelines to establish the policy that data developed in compliance with those guidelines will be accepted by the Agency for purposes of review. In response to these comments, APHIS notes that its guidelines are intended to provide guidance to applicants as to what kind of information could be or has been submitted and approved by APHIS. This guidance is not a guarantee that any other submission along the same lines will receive the same determination. Each situation will be addressed on a case-by-case basis. Also, the guidelines are not intended to be requirements for submission of requests under this part and, accordingly, they have not been placed in the regulations. Should APHIS at a later date decide to adopt the guidelines as requirements, it would do so after notice and comment rulemaking. In addition, APHIS anticipates that data and information submitted in accordance with the guidelines would generally be acceptable to the Agency, unless additional information becomes available to the Agency that raises specific new plant pest risk issues regarding a particular request for an extension of a determination of nonregulated status. As stated previously, this determination will be made on a case-by-case basis. No change to the regulations is made in response to these comments.

Several comments were received regarding the use of guidelines to help applicants establish the similarity of a regulated article to an antecedent organism. Many of the comments suggested that APHIS needed to provide clear definitions for ''closely related'' and ''negligibly different,'' two terms used in the discussion of the relation of antecedent organism to regulated article in the proposed rule. Two comments indicated that a standard for ''closely related'' should be put directly in the text of the regulations. Several commenters also expressed the desire to

comment directly on precise definitions for these terms or on any guidelines APHIS might develop. Several comments suggested that it was not possible, given the information in the proposed rule, to provide informed comments on this portion of the proposed rule.

In response to these comments, APHIS continues to believe, as indicated in the proposed rule, that it is not appropriate to establish rigid rules or definitions for determining similarity. A wide range of minor differences might be exhibited by a regulated article and its antecedent organism that would not affect any characteristics related to the potential for plant pest risk of the regulated article. Moreover, the relevant plant pest risk issues discussed in any determination of nonregulated status will vary depending on the biology of the regulated article in question. When an applicant requests an extension of a determination of nonregulated status, that applicant must demonstrate that the Agency's analysis of the identified relevant issues for the antecedent organism, in fact adequately addresses all relevant issues relating to the regulated article as well. APHIS has developed guidelines for extensions to determinations of nonregulated status. The Agency believes that these guidelines will provide useful examples of some types of modifications that should not raise new plant pest risk issues, and the kinds of information that an applicant may use in support of such a request. No applicant is required to follow the guidelines, and because an applicant follows the guidelines does not mean his or her request will automatically be approved. Each application will be evaluated on its own merits. The guidelines are available on the Internet or by mail as indicated under **FOR FURTHER INFORMATION CONTACT**. APHIS welcomes suggestions on how to improve the guidelines themselves. The Agency will carefully consider all suggestions, both those that identify specific new plant pest risk issues that may be posed by classes of modifications as well as any of those identifying additional types of similarities that would be unlikely to raise any new risk issues. The guidelines will be updated periodically as extensions are granted.

Several comments indicated general preferences for either stringent or flexible requirements. Four other comments provided specific suggestions as to the types of similarities between antecedent organisms and regulated articles that the commenters believe would be unlikely to raise new plant pest risk issues. APHIS does not believe that it would be informative to attempt to categorize guidance information provided to potential applicants as either ''stringent'' or ''flexible,'' inasmuch as these are subjective terms. We would note that independent of the specific content of the guidelines, the Agency's responsibilities to prevent the introduction and dissemination of plant pests are no less stringent under the regulations in 7 CFR part 340 than under its other regulations. The comments suggested the following types of changes between antecedent organisms and regulated articles would raise no new plant pest risk issues: the regulated article and the antecedent organism contain genes from different donor organisms when the two genes perform the same molecular function; and the antecedent organism and the regulated article differ only in the use of a different selectable marker gene; the antecedent organism and the regulated article differ only in structural modifications of the same functional gene, or in the use of different noncoding regulatory sequences to drive the expression of the gene. APHIS agrees that it is likely that most organisms in the proposed classes would raise no new plant pest risk issues. As an illustration, a new ''selectable marker gene'' could potentially be a gene of any function, providing that a useful assay has been developed for it in the context in which the gene is to be expressed. However, evaluation of the potential for plant pest risk posed by a new selectable marker gene would, APHIS believes, require consideration of the specific function of that gene. A requester will need to provide justification as to why the analysis put forth in the determination of nonregulated status for the antecedent organism is adequate to address any potential plant pest risk issues that may be posed by the regulated article. No changes to the regulations are made in response to these comments.

One State cooperator expressed the view that States need the opportunity to review guidelines to verify that any specific conditions in the State are addressed. The comment asked three questions: (1) how States can make known any difference of opinion on any judgment by APHIS to extend a determination of nonregulated status; (2) whether the particular guideline on which a requester based a request for extension of a determination would be identified in that request; and (3) if a different guideline were followed by a person requesting an extension of a determination of nonregulated status, whether States would have the opportunity to comment on that guideline.

In response to these comments, APHIS notes, first, that it welcomes any comments from its State cooperators at any time, whether in response to any guideline or in response to a particular action to extend a determination of nonregulated status. With respect to the identification of specific guidelines on which an applicant bases his or her request to extend a determination of nonregulated status, APHIS presumes that the applicant will describe in any request, the justification for the proposed extension. An applicant may choose whether or not to follow a particular guideline as a basis for a proposed extension, inasmuch as adherence to the guidelines is not mandatory. APHIS believes that whether any particular guideline may have been followed is not important, but that States should focus on the justification provided by an applicant and the documentation developed by the Agency that demonstrates that the analysis of the antecedent organism is adequate to address the new regulated article as well.

One commenter in favor of the proposal to allow the extension of determinations of nonregulated status to closely related organisms requested that APHIS change the term ''antecedent organism'' to either ''antecedent deregulated article'' or ''substantially equivalent organism,'' to avoid implying that new genetic transformation events result in ''new organisms.'' APHIS does not believe that the term ''antecedent organism'' carries with it the implication that the commenter inferred. No change to the regulations is made in response to this comment.

Two commenters requested that individuals who seek extensions of determinations of nonregulated status and who did not submit the initial petition for determination of nonregulated status be required by APHIS to provide written proof of permission for use of any information in the initial petition. One of those comments further suggested that APHIS should provide petitioners with a means of deriving compensation for information from their petition that is used by another person who requests an extension of the original determination of nonregulated status. If such a compensation provision is not included, then, the comment asserted, extensions of determinations of nonregulated status should only be available to the submitters of the initial petition for the antecedent organism.

APHIS understands the concern that competitors may derive a competitive advantage from utilizing information developed by others without equivalent expenditure of time and money. However, the Agency disagrees that an individual who requests an extension of a determination of nonregulated status will necessarily utilize to any great extent the data contained in the petition for the antecedent organism. Rather, a person who requests an extension to a determination of nonregulated status is likely, in large part, to make reference to APHIS' analysis of the potential for plant pest risk posed by the antecedent organism, providing additional evidence for the new regulated article that the existing analysis is adequate to address that organism as well. Requesters do need, however, to attest to the validity of any data they provide to the agency that is material to the safety of the regulated article that is the subject of the extension request.

Two commenters requested clarification on the content of requests to extend determinations of nonregulated status, specifically on the format of such requests and on information requirements. APHIS does not believe a specific format for requests for extension of determinations of nonregulated status needs to be specified, but believes that the request itself could simply be provided to the Agency in the form of a letter. Similarly, the guidelines, as guidelines rather than regulations, do not specify data requirements in great detail, but indicate the general rationale of the analyses that need to be presented to the Agency and the general areas that need to be addressed, including a description of the genetic modifications in the regulated articles under consideration and a comparison of the modifications in those regulated articles with those in the antecedent organism, information on the phenotypic expression of the genetic modifications in the regulated articles and any known differences in phenotype between the regulated article and its antecedent organism in support of the contention that the regulated articles in question do not pose new risk issues meriting separate consideration.

One commenter requested that APHIS clarify whether field data reports need to be submitted along with a request to extend determinations of nonregulated status. APHIS believes that submission of such data is material to any determination of nonregulated status, whether the determination is made in response to a separate petition or in response to a request for extension of a determination. (The guidelines mentioned previously do indicate that data from at least one field trial should be included for any new regulated articles for which an extension of a determination of nonregulated status is requested.) APHIS intended in its proposed rule that requirements for submission of field data reports for petitions for the determination of nonregulated status under proposed § 340.6(c)(5) would also apply to extensions of such determinations. In response to comments, proposed § 340.6(c)(5) is revised to indicate that field test reports for all completed field trials need to be submitted prior to submission of either a petition for determination of nonregulated status or a request for extension of a determination of nonregulated status.

Two commenters recommended that APHIS eliminate the 30-day interval between the announcement of an extension of a determination of nonregulated status and its effective date, based on the fact that the Agency had already conducted a thorough safety review, with public comment, on the antecedent organism. APHIS believes that it is necessary to retain the 30-day interval to allow State officials and PPQ officers to receive and process the information concerning the extension of an existing determination to new lines. Moreover, § 340.6(e)(3) ensures that the public has adequate notice of all preliminary decisions to extend determinations of nonregulated status by announcing such decisions in the **Federal Register** 30 days before the decisions become final and effective. This section provides that APHIS may modify its preliminary decision should APHIS receive additional information that it determines warrants a change in the decision. In such cases, APHIS will issue a revised decision and publish it in the **Federal Register**. In the absence of additional information that the Agency believes warrants such a change, the preliminary decision will automatically become final and effective after 30 days.

Comments on Proposed Simplifications to Reporting Requirements Under Permit or Notification (§§ 340.3(d)(4), 340.4(f)(9)), and 340.6(c)(5))

About 40 percent of the comments specifically addressed the proposals to simplify the reporting requirements under permit and notification procedures in §§ 340.3(d)(4), 340.4(f)(9), and 340.6(c)(5). Less than half of the comments on this section supported the proposal. These supportive commenters recognized the intent of the proposed regulations to preserve reporting of all significant occurrences, in that the proposed regulations would still require: reporting of deleterious effects observed in trials under either permit or notification procedures; and submission of all field test reports for completed trials prior to, or as part of, a petition for determination of nonregulated status.

A majority of those who commented on this section opposed the proposed simplification of reporting requirements, although a few of those commenters indicated that other, more limited streamlining measures would be appropriate. Several commenters suggested that field reporting requirements should be strengthened, although no evidence in support of such a view was provided.

Commenters opposed to the proposed regulations and in favor of retaining existing reporting requirements or of implementing other, more limited measures, provided justification for their disapproval of the proposed changes to the regulations. One commenter suggested that even though there have been no unfavorable incidents with the few organisms released to date, other future releases might not be as safe, and that there has been little long term analysis of the potential environmental effects caused by such releases. A second commenter suggested that USDA created a loophole which would allow companies to decide for themselves what constitutes deleterious effects, and that USDA and the public could be kept in the dark about unsafe field trials. A third commenter stressed the importance of reporting requirements as an incentive for companies to comply with APHIS's record-keeping requirement, in providing information to the public, and in helping generate public confidence in the conduct of field trials.

In response to these comments, APHIS agrees in part with the first comment that it is inappropriate to base judgments on the safety of future introductions of specific regulated articles solely on the behavior of other regulated articles in previous introductions. However, we have never intended that reports of field trial results submitted to APHIS be broadly used to affirm the safety of individual future trials with other organisms. Each report is used in more limited and appropriate contexts that refer specifically to the trial itself, i.e., to verify that specific introduction did not result in unmanaged dissemination of a regulated article, and to document any unusual occurrences during the trial or any deleterious effects of the regulated article on plants, nontarget organisms, or the environment. The reports do support the broad conclusion that it has

been possible to conduct field trials with a variety of plant species under a variety of experimental protocols without unmanaged dissemination of regulated articles, and the reports indicate that to date, observed unusual occurrences and deleterious effects have been minimal. Further, APHIS believes that the suggestion that the Agency should consider potential long term environmental effects that differ from any effects that have yet been observed is outside the scope of the requirements of the NEPA and would be an exercise in speculation. NEPA does require, however, that Agencies have a continuing duty to gather and evaluate new information relevant to the environmental impact of their actions (*See* Association Concerned About Tomorrow v. Dole, 610 F.Supp. 1101 (D.C. Texas 1985)).

APHIS also disagrees with the second comment that the proposed simplifications of reporting requirements create a ''loophole'' for the reporting of deleterious effects. The proposed regulation neither alters in any way the legal requirement that deleterious effects be reported to the agency, nor alters either the classes of effects that are to be reported to the agency or the time schedules for reporting those effects. The proposed rule would only have eliminated the requirement for submission of field data reports for field trials conducted under notification procedures if those trials exhibited no deleterious effects, unusual occurrences, or accidental releases. Any events or observations of deleterious effects, unusual occurrences, or accidental releases would have been reported to APHIS and the reports would have been available for public scrutiny. If a responsible person had any uncertainty regarding whether a particular event or observation constituted a deleterious effect, unusual occurrence, or accidental release, it was their responsibility to contact APHIS to ascertain whether that event or observation required reporting under the proposed regulations.

In response to the third comment, APHIS disagrees that the requirement to submit field data reports for trials under notification procedures in which no deleterious effect, unusual occurrence, or accidental release is observed, in fact provides any additional incentive to maintain complete and accurate records. However, the Agency agrees that the availability of field trial reports, including the vast majority not reporting unexpected events, may help to increase public confidence about the conduct of field trials. For this reason, we believe that there is significant benefit in maintaining reporting requirements for all field trials under notification or permit procedures at the present time. The Agency will accordingly continue to require submission of field data reports for all field trials. The regulations at § 340.3(d)(4)(i) are changed in response to these comments.

Inasmuch as the proposal did not affect recordkeeping requirements, we believe that a continued requirement for submission of field data reports is not a great burden on responsible persons. APHIS received two identical comments that opposed the original proposal for streamlining reporting requirements. Both comments requested that, for field trials of longer than one year duration, the requirement for yearly submission of field data reports be eliminated and that only a single report be submitted within 6 months of completion of the field trial. APHIS believes that this is a reasonable request. In response to these comments, the regulations at §§ 340.3(d)(4)(i) and 340.4(f)(9) are changed accordingly. Additionally, the regulations at § 340.6(c)(5) for the submission of yearly field data reports in multi-year field trials in support of petitions for determination of nonregulated status are changed to be consistent with the previous sections.

Another commenter suggested that when APHIS receives field test reports that demonstrate deleterious effects or other unexpected field observations, the agency should be required to notify the affected State of those observations. APHIS agrees that affected States should be informed when such events are observed. Such provision of information is in keeping with our existing coordination with States. APHIS currently provides such information to States on a routine basis, and will continue to inform affected States in the future whenever the Agency receives either a report of deleterious effects or directly notify States under § 340.4(f)(10) that there has been an accidental or unplanned release.

## Miscellaneous

We are deleting all references to ''Biotechnology, Biologics, and Environmental Protection'' and replacing them with ''Animal and Plant Health Inspection Service'' in order to reflect an internal reorganization within APHIS; we are also adding a definition of *Administrator* as part of that change. The authority citation has also been amended to reflect number changes in Title 7 of the Code of Federal Regulations that address delegations of authority to the Assistant Secretary, Marketing and Regulatory Programs, and the Administrator, APHIS.

Therefore, based on the rationale set forth in the proposed rule and in this document, we are adopting the provisions of the proposal as a final rule with the changes discussed in this document.

## Executive Order 12866 and Regulatory Flexibility Act

This rule has been reviewed under Executive Order 12866. The rule has been determined to be significant for the purposes of Executive Order 12866 and, therefore, has been reviewed by the Office of Management and Budget.[1]

The effect of the amendments is to simplify procedures: (1) For the introduction of certain genetically engineered organisms by expanding the scope of organisms that will be included under notification procedures and lessening certain administrative requirements for State concurrence on interstate movements under notification procedures; (2) for determination of nonregulated status for certain organisms by allowing for extension of determinations of nonregulated status to other regulated articles closely related to those for which the initial determination was made; and (3) for reporting requirements during multi-year field trials.

The expansion of the scope of organisms included under notification procedures will eliminate the need for a permit to conduct field tests for many crops that currently fall under the permitting regulations. This will allow researchers to conduct field tests for most crops with greatly simplified regulatory requirements. At present, approximately 87 percent of all field trials are conducted under notification procedures. Based on trials to date, APHIS estimates that less than 0.5 percent of the transgenic plants field tested would not qualify for notification procedures based on the local weed status of the crop species. In addition, nearly 99 percent of all introduced genes in plants field tested to date have qualified under notification procedures. Most of the donor genes that have not met the eligibility criteria have been virus-derived genes that could

[1] The agricultural biotechnology industry is still in a relatively early stage of development. Each year, as the industry continues to grow, it is anticipated there will be growth in experimentation, ultimately resulting in an increase in agricultural production and a broadening of international trade. The potential benefits could be significant, but are speculative at this time. APHIS anticipates that this Final Rule will be generally welcomed by public and private researchers, because it is estimated that it could save the industry as a whole perhaps $50,000 in costs associated with preparing submissions to APHIS. These savings are expected to increase as the number of submissions to APHIS continues to grow.

potentially also qualify for notification under the revised § 340.3(b)(5). APHIS therefore estimates that about 99 percent of all field trials will be conducted under notification procedures under these modifications. APHIS estimates that the cost savings for preparation of notification over preparation of a permit application is approximately 95 percent.

APHIS also estimates that extension of existing determinations will potentially be applicable to perhaps half of all regulated articles for which a determination of nonregulated status might be sought. The amount of time required to establish similarity with an antecedent organism, APHIS estimates, might be about one-fourth of that required for preparation of a petition for determination of nonregulated status. Much of this data is data that the researcher should already have acquired while conducting field tests of genetically engineered crops.

This rule is consistent with the risk-based and product-based philosophy underlying the Federal policy for the regulation of the products of biotechnology, as announced by the Office of Science and Technology Policy in the Coordinated Framework for the Regulation of the Products of Biotechnology (51 FR 23303–23350, June 26, 1986). It is also consistent with the principles of regulation expressed in Executive Order 12866, specifically that the agency consider the degree and nature of risks posed by the activities under its jurisdiction, and tailor its regulations to achieve the least burden on society consistent with obtaining its regulatory objectives. The option of allowing applicants to submit requests to extend existing determinations of nonregulated status to one or more related organisms is also consistent with the Presidential Memorandum to heads of Departments and Agencies of March 4, 1995, on the Regulatory Reform Initiative which, among other things, directs agencies to consider the question, ''Could private business, setting its own standards and being subject to public accountability, do the job as well?''

In response to the comments received, APHIS is changing the proposed regulations to simplify field test reporting for notifications, permits, and petitions, and to clarify the requirement for State concurrence on interstate movements under notification procedures.

Under these circumstances, the Administrator of the Animal and Plant Health Inspection Service has determined that this action will not have a significant economic impact on a substantial number of small entities.

**Executive Order 12372**

This program/activity is listed in the Catalog of Federal Domestic Assistance under No. 10.025 and is subject to Executive Order 12372, which requires intergovernmental consultation with State and local officials. (See 7 CFR part 3015, subpart V.)

**Executive Order 12988**

This rule has been reviewed under Executive Order 12988, Civil Justice Reform. This rule: (1) Preempts all State and local laws and regulations that are inconsistent with this rule; (2) has no retroactive effect; and (3) does not require administrative proceedings before parties may file suit in court challenging this rule.

**Paperwork Reduction Act**

This final rule contains an information collection requirement that was not included in the proposed rule. Specifically, this final rule adds an additional 288 annual burden hours required for the field test reports submission to APHIS. In accordance with section 3507(d) of the Paperwork Reduction Act of 1995 (44 U.S.C. 3501 *et seq.*), this information collection requirement has been submitted for approval to the Office of Management and Budget (OMB). When OMB notifies us of its decision, we will publish a document in the **Federal Register** providing notice of the assigned OMB control number or, if approval is denied, providing notice of what action we plan to take.

**List of Subjects in 7 CFR Part 340**

Administrative practice and procedure, Biotechnology, Genetic engineering, Imports, Packaging and containers, Plant diseases and pests, Transportation.

Accordingly, we are amending 7 CFR part 340 as follows:

## PART 340—INTRODUCTION OF ORGANISMS AND PRODUCTS ALTERED OR PRODUCED THROUGH GENETIC ENGINEERING WHICH ARE PLANT PESTS OR WHICH THERE IS REASON TO BELIEVE ARE PLANT PESTS

1. The authority citation for part 340 is revised to read as follows:

**Authority:** 7 U.S.C. 150aa–150jj, 151–167, and 1622n; 31 U.S.C. 9701; 7 CFR 2.22, 2.80, and 371.2(c).

### § 340.0 [Amended]

2. In § 340.0(a), the introductory text, the words ''Director, BBEP,'' are removed and the word ''Administrator'' added in their place.

3. Section 340.1 is amended as follows:

a. In the definitions of *courtesy permit, inspector, permit,* and *regulated article,* the words ''Director, BBEP,'' are removed and the word ''Administrator'' added in their place.

b. The definition of *Director, BBEP* is removed, and definitions for *Administrator* and *antecedent organism* are added, in alphabetical order, to read as set forth below:

### § 340.1 Definitions.

* * * * *

*Administrator.* The Administrator of the Animal and Plant Health Inspection Service (APHIS) or any other employee of APHIS to whom authority has been or may be delegated to act in the Administrator's stead.

* * * * *

*Antecedent organism.* An organism that has already been the subject of a determination of nonregulated status by APHIS under § 340.6, and that is used as a reference for comparison to the regulated article under consideration under these regulations.

* * * * *

### §§ 340.4, 340.8, and 340.9 [Amended]

4. In § 340.4, footnotes 5 through 7 are redesignated as footnotes 7 through 9; in § 340.8, footnote 8 is redesignated as footnote 12; and in § 340.9, footnote 9 is redesignated as footnote 13.

5. Section 340.3 is amended as follows:

a. A new footnote 5 is added at the end of the section heading and paragraphs (b)(1), (b)(5), (d)(4), (e)(1) and (e)(4) are revised to read as set forth below.

b. In paragraph (d)(1), the words ''Biotechnology, Biologics, and Environmental Protection'' are removed and the words ''Plant Protection and Quarantine, Biotechnology and Scientific Services'' are added in their place.

c. In paragraph (d)(3), introductory text, the word ''BBEP'' is removed and the word ''APHIS'' is added in its place.

d. In paragraphs (d)(5), (e)(2), and (e)(3), the words ''Director, BBEP,'' are removed and the word ''Administrator'' is added in their place.

### § 340.3 Notification for the introduction of certain regulated articles.[5]

* * * * *

[5] APHIS may issue guidelines regarding scientific procedures, practices, or protocols which it has found acceptable in making various determinations under the regulations. A person may follow an APHIS guideline or follow different procedures, practices, or protocols. When different procedures, practices, or protocols are followed, a person may,

(b) * * *

(1) The regulated article is any plant species that is not listed as a noxious weed in regulations at 7 CFR part 360 under the Federal Noxious Weed Act (7 U.S.C. 2809), and, when being considered for release into the environment, the regulated article is not considered by the Administrator to be a weed in the area of release into the environment.

* * * * *

(5) To ensure that the introduced genetic sequences do not pose a significant risk of the creation of any new plant virus, plant virus-derived sequences must be:

(i) Noncoding regulatory sequences of known function, or

(ii) Sense or antisense genetic constructs derived from viral genes from plant viruses that are prevalent and endemic in the area where the introduction will occur and that infect plants of the same host species, and that do not encode a functional noncapsid gene product responsible for cell-to-cell movement of the virus.

* * * * *

(d) * * *

(4) Field test reports must be submitted to APHIS within 6 months after termination of the field test. Field test reports shall include the APHIS reference number, methods of observation, resulting data, and analysis regarding all deleterious effects on plants, nontarget organisms, or the environment.

* * * * *

(e) * * *

(1) APHIS will provide copies of all notifications to appropriate State regulatory official(s) for review within 5 business days of receipt. Comments to APHIS from appropriate State regulatory officials in response to notifications for interstate movement of regulated articles will not be required by APHIS prior to acknowledgment, although States may provide their reviews to APHIS at their discretion.

* * * * *

(4) APHIS will provide acknowledgment within 30 days of receipt that the environmental release is appropriate under notification. Such acknowledgment will apply to field testing for 1 year from the date of introduction, and may be renewed annually by submission of an additional notification to APHIS.

* * * * *

but is not required to, discuss the matter in advance with APHIS to help ensure that the procedures, practices, or protocols to be followed will be acceptable to APHIS.

6. Section 340.4 is amended as follows:

a. A new footnote 6 is added at the end of the section heading.

b. In paragraph (a), the first complete sentence after the paragraph heading is revised to read as set forth below.

c. Paragraph (f)(9) is revised to read as set forth below.

d. The words ''Director, BBEP'' are removed and the word ''Administrator'' is added in their place in the following places:

i. Paragraph (f), introductory text;

ii. Paragraph (f)(7);

iii. Paragraph (f)(8);

iv. Paragraph (g), each time they appear;

v. Paragraph (h)(1).

e. The words ''Biotechnology, Biologics, and Environmental Protection'' are removed and the word ''APHIS'' is added in their place in the following places:

i. Paragraph (b), introductory text, each time they appear;

ii. Paragraph (c), introductory text, each time they appear;

iii. Paragraph (c)(1), both times they appear;

iv. Paragraph (c)(2);

v. Paragraph (f)(10);

vi. Paragraph (f)(11)(ii);

vii. Paragraph (h)(2);

viii. Paragraph (h)(3), both times they appear.

f. In paragraph (b), in newly redesignated footnote 8, the words ''Biotechnology, Biologics, and Environmental Protection'' are removed and the words ''Plant Protection and Quarantine, Biotechnology and Scientific Services'' added in their place.

g. In paragraph (e), the words ''Biotechnology, Biologics, and Environmental Protection, of the'' are removed and the words ''APHIS of the'' added in their place, and the words ''Biotechnology, Biologics, and Environmental Protection, a permit'' are removed and the words ''APHIS, a permit'' added in their place.

**§ 340.4 Permits for the introduction of a regulated article.[6]**

(a) * * * Two copies of a written application for a permit to introduce a regulated article, which may be obtained from APHIS, shall be submitted by the responsible person to the Animal and Plant Health Inspection Service, Plant Protection and Quarantine, Biotechnology and Scientific Services, Biotechnology Permits, 4700 River Road, Unit 147, Riverdale, Maryland 20737–1237. * * *

* * * * *

[6] See footnote 5 in § 340.3.

(f) * * *

(9) A person who has been issued a permit shall submit to APHIS a field test report within 6 months after the termination of the field test. A field test report shall include the APHIS reference number, methods of observation, resulting data, and analysis regarding all deleterious effects on plants, nontarget organisms, or the environment.

* * * * *

7. Section 340.5 is amended as follows:

a. In § 340.5, a new footnote 10 is added at the end of the section heading to read as set forth below.

b. The words ''Director, BBEP'' are removed and the word ''Administrator'' added in their place in the following places:

i. In paragraph (a), each time it appears.

ii. In paragraph (c)(3), both times it appears.

c. In paragraph (b), introductory text, the words ''Biotechnology, Biologics, and Environmental Protection'' are removed and the words ''Biotechnology and Scientific Services, PPQ'' added in their place.

d. In paragraph (b), under subheading ''PETITION TO AMEND 7 CFR 340.2,'' the words ''the Director, BBEP of Biotechnology, Biologics, and Environmental Protection, to'' are removed and the words ''that the Administrator'' added in their place.

e. In paragraph (c)(1), in the third sentence, and in paragraph (c)(3), the words ''Biotechnology, Biologics, and Environmental Protection'' are removed and the word ''APHIS'' added in their place.

f. In paragraph (c)(1), in the first sentence, and in paragraph (c)(2), the words ''Director of Biotechnology, Biologics, and Environmental Protection'' are removed and the word ''APHIS'' added in their place.

g. In paragraph (c)(3)(ii), the words ''Director, BBEP's'' are removed and the word ''Administrator's'' added in their place.

**§ 340.5 Petition to amend the list of organisms.[10]**

* * * * *

8. Section 340.6 is amended as follows:

a. A new footnote 11 is added at the end of the section heading, a new paragraph (c)(5) is added, paragraph (e) is redesignated as paragraph (f), and a new paragraph (e) is added to read as set forth below.

b. The words ''Director, BBEP,'' are removed and the word ''Administrator''

[10] *See* footnote 5 in § 340.3.

added in their place in the following places:

i. Paragraph (a), both times they appear;

ii. Paragraph (b), under subheading ''PETITION FOR DETERMINATION OF NONREGULATED STATUS'';

iii. Paragraphs (d)(1), (d)(2), and (d)(3).

c. In paragraph (a), remove the words ''Director, Biotechnology, Biologics, and Environmental Protection (BBEP),'' and add in their place the word ''Administrator''.

d. In paragraph (b), remove the words ''Biotechnology, Biologics, and Environmental Protection'' and add in their place the words ''Plant Protection and Quarantine, Biotechnology and Scientific Services''.

e. In paragraph (c)(4), remove the word ''Director'' and add the word ''Administrator'' in its place.

f. In paragraph (d)(1), remove the words ''The BBEP'' and add in their place the word ''APHIS''.

g. In the undesignated paragraph following paragraph (d)(3)(ii), remove the word ''Director's'' and add the word ''Administrator's'' in its place, and remove the word ''BBEP'' and add the word ''APHIS'' in its place.

h. In newly redesignated paragraph (f)(1), remove the word ''Director's'' and add the word ''Administrator's'' in its place.

**§ 340.6 Petition for determination of nonregulated status.**[11]

* * * * *

(c) * * *

(5) Field test reports for all trials conducted under permit or notification procedures, involving the regulated article, that were submitted prior to submission of a petition for determination of nonregulated status or prior to submission of a request for extension of a determination of nonregulated status under paragraph (e) of this part. Field test reports shall include the APHIS reference number, methods of observation, resulting data, and analysis regarding all deleterious effects on plants, nontarget organisms, or the environment.

* * * * *

(e) *Extensions to determinations of nonregulated status.*

(1) The Administrator may determine that a regulated article does not pose a potential for plant pest risk, and should therefore not be regulated under this part, based on the similarity of that organism to an antecedent organism.

(2) A person may request that APHIS extend a determination of nonregulated status to other organisms. Such a request shall include information to establish the similarity of the antecedent organism and the regulated articles in question.

(3) APHIS will announce in the **Federal Register** all preliminary decisions to extend determinations of nonregulated status 30 days before the decisions become final and effective. If additional information becomes available that APHIS believes justifies changing its decision, it will issue a revised decision.

(4) If a request to APHIS to extend a determination of nonregulated status under this part is denied, APHIS will inform the submitter of that request of the reasons for denial. The submitter may submit a modified request or a separate petition for determination of nonregulated status without prejudice.

* * * * *

**§ 340.7 [Amended]**

9. In § 340.7, paragraph (b), the introductory text, remove the words ''Biotechnology, Biologics, and Environmental Protection'' and add in their place the word ''APHIS''.

Done in Washington, DC, this 28th day of April 1997.

**Donald W. Luchsinger,**

*Acting Administrator, Animal and Plant Health Inspection Service.*

[FR Doc. 97–11359 Filed 5–1–97; 8:45 am]

BILLING CODE 3410–34–P

[11] *See* footnote 5 in § 340.3.

---

## DEPARTMENT OF AGRICULTURE

## Rural Utilities Service

## 7 CFR Part 1755

## RUS Standard for Acceptance Tests and Measurements of Telecommunications Plant

**AGENCY:** Rural Utilities Service, USDA.

**ACTION:** Final rule.

**SUMMARY:** The Rural Utilities Service (RUS) amends its regulations on Telecommunications Standards and Specifications for Materials, Equipment and Construction, by rescinding RUS Bulletin 345–63, RUS Standard for Acceptance Tests and Measurements of Telephone Plant, PC–4, and codifying the revised RUS standard at 7 CFR 1755.400 through 7 CFR 1755.407, in the Code of Federal Regulations. The revised standard: Updates the acceptance tests and measurements for copper conductor telecommunications plant; includes a section on acceptance tests and measurements for fiber optic cable plant; includes a section on acceptance tests and measurements for voiceband data transmission; and includes a shield or armor ground resistance test to determine outer jacket cable damage.

**DATES:** Effective date: June 2, 1997.

*Incorporation by reference:* Incorporation by reference of certain publications listed in this final rule is approved by the Director of the Federal Register as of June 2, 1997.

**FOR FURTHER INFORMATION CONTACT:** Charlie I. Harper, Jr., Chief, Outside Plant Branch, Telecommunications Standards Division, Rural Utilities Service, room 2837, STOP 1598, South Building, U.S. Department of Agriculture, Washington, DC 20250–1598, telephone number (202) 720–0667.

**SUPPLEMENTARY INFORMATION:**

### Executive Order 12866

This final rule has been determined to be not significant and therefore has not been reviewed by the Office of Management and Budget.

### Executive Order 12988

This final rule has been reviewed under Executive Order 12988, Civil Justice Reform. RUS has determined that this final rule meets the applicable standards provided in section 3 of that Executive Order.

### Regulatory Flexibility Act Certification

The Administrator of RUS has determined that this final rule will not have a significant economic impact on a substantial number of small entities, as defined by the Regulatory Flexibility Act (5 U.S.C. 601 *et seq.*). This final rule involves standards and specifications, which may increase the direct short-term costs to RUS borrowers. However, the long-term direct economic costs are reduced through greater durability and lower maintenance cost over time.

### Information Collection and Recordkeeping Requirements

The reporting and recordkeeping requirements contained in the final rule were approved by the Office of Management and Budget (OMB) pursuant to the Paperwork Reduction Act of 1995 (44 U.S.C. Chapter 35, as amended) under control number 0572–0059.

Send questions or comments regarding this burden or any aspect of these collections of information, including suggestions for reducing the burden, to F. Lamont Heppe, Jr., Director, Program Support and Regulatory Analysis, Rural Utilities Service, U.S. Department of Agriculture,

Stop 1522, Washington, DC 20250–1522, Fax: (202) 720–4120.

**National Environmental Policy Act Certification**

The Administrator of RUS has determined that this final rule will not significantly affect the quality of the human environment as defined by the National Environmental Policy Act of 1969 (42 U.S.C. 4321 *et seq.*) Therefore, this action does not require an environmental impact statement or assessment.

**Catalog of Federal Domestic Assistance**

The program described by this final rule is listed in the Catalog of Federal Domestic Assistance programs under No. 10.851, Rural Telephone Loans and Loan Guarantees; and No. 10.852, Rural Telephone Bank Loans. This catalog is available on a subscription basis from the Superintendent of Documents, the United States Government Printing Office, Washington, DC 20402.

**Executive Order 12372**

This final rule is excluded from the scope of Executive Order 12372, Intergovernmental Consultation, which may require consultation with State and local officials. A Notice of Final rule titled Department Programs and Activities Excluded from Executive Order 12372 (50 FR 47034) exempts RUS and RTB loans and loan guarantees, and RTB bank loans, to governmental and nongovernmental entities from coverage under this Order.

**Background**

RUS issues publications titled ''Bulletin'' which serve to guide borrowers regarding already codified policy, procedures, and requirements needed to manage loans, loan guarantee programs, and the security instruments which provide for and secure RUS financing. RUS issues standards and specifications for the construction of telephone facilities financed with RUS Loan Funds. RUS is rescinding Bulletin 345–63, ''RUS Standard for Acceptance Tests and Measurements of Telephone Plant, PC–4,'' and to codifying this standard in 7 CFR 1755.400 through 7 CFR 1755.407, RUS Standard for Acceptance Tests and Measurements of Telecommunications Plant.

This standard is used to determine the acceptability of installed telecommunications plant. The current standard with regard to copper cable plant acceptance tests and measurements has become outdated as a result of technological advancements made in copper cable plant acceptance test methods during the past fourteen years. Therefore to assure RUS borrowers that their installed copper cable plant is of the highest quality, the revised standard will update acceptance test and measurement methods for copper cable plant.

There is currently a need to include into the standard a section dealing with standardized test methods and measurements for installed fiber optic cable plant. Presently acceptance test methods and measurements for fiber optic cable plant are developed by each consulting engineer resulting in a variety of test methods and measurements which in turn results in higher construction costs to RUS borrowers. By providing standardized acceptance test methods and measurements for fiber optic cable plant, RUS will be assisting its borrowers by decreasing their construction costs for fiber optic cable installation.

There is currently a need to include into the standard a section dealing with standardized test methods and measurements for voiceband data transmission. Because RUS borrowers are increasing their usage of modems to transmit data over telecommunications transmission facilities, standardized test methods and measurements are needed to ensure that the transmission facilities are acceptable for data transmission.

There is presently a need to include into the current standard a standardized shield or armor ground resistance test method and a minimum requirement to determine when the outer cable jacket is damaged as a result of the installation procedures. This standard test method and minimum requirement will result in cost savings to RUS borrowers because the variety of test methods and minimum requirements presently being used by consulting engineers and contractors will be eliminated.

This action establishes RUS standardized acceptance test methods and measurements to determine acceptability of installed telecommunications plant. These standardized acceptance test methods and measurements will afford RUS telephone borrowers an economical and efficient means of reducing their construction costs.

On August 28, 1996, RUS published a proposed rule (61 FR 44195) to rescind RUS Bulletin 345–63, RUS Standard for Acceptance Tests and Measurements of Telephone Plant, PC–4, and to codify the revised RUS Standard for Acceptance Tests and Measurements of Telecommunications Plant in 7 CFR 1755.400 through 7 CFR 1755.407. Comments on this proposed rule were due October 28, 1996. No comments were received by this due date.

**List of Subjects in 7 CFR Part 1755**

Incorporation by reference, Loan programs—communications, Reporting and recordkeeping requirements, Rural areas, Telephone.

For the reasons set out in the preamble, RUS amends chapter XVII of title 7 of the Code of Federal Regulations as follows:

## Part 1755—Telecommunications Standards and Specifications for Materials, Equipment and Construction

1. The authority citation for part 1755 continues to read as follows:

**Authority:** 7 U.S.C. 901 *et seq.*, 1921 *et seq.*, 6941 *et seq.*

**§ 1755.97 [Amended]**

2. Section 1755.97 is amended by removing the entry RUS Bulletin 345–63 from the table.

3. Section 1755.98 is amended by adding the entry 1755.400 through 1755.407 to the table in numerical order to read as follows:

**§ 1755.98 List of telephone standards and specifications included in other 7 CFR parts.**

* * * * *

| Section | Issue date | Title |
|---|---|---|
| * * | * * * | * * |
| 1755.400 through 1755.407 | [Effective date of final rule] | RUS Standard for Acceptance Tests and Measurements of Telecommunications Plant. |
| * * | * * * | * * |

4. Sections 1755.400 through 1755.407 are added to read as follows:

**§ 1755.400 RUS standard for acceptance tests and measurements of telecommunications plant.**

Sections 1755.400 through 1755.407 cover the requirements for acceptance tests and measurements on installed copper and fiber optic telecommunications plant and equipment.

**§ 1755.401 Scope.**

(a) Acceptance tests outlined in §§ 1755.400 through 1755.407 are applicable to plant constructed by contract or force account. This testing standard provides for the following:

(1) Specific types of tests or measurements for the different types of telecommunications plant and equipment;

(2) The method of measurement and types of measuring equipment;

(3) The expected results and tolerances permitted to meet the acceptable standards and objectives;

(4) Suggested formats for recording the results of the measurements and tests; and

(5) Some probable causes of nonconformance and methods for corrective action, where possible.

(b) Alternative methods of measurements that provide suitable alternative results shall be permitted with the concurrence of the Rural Utilities Service (RUS).

(c) For the purpose of this testing standard, a ''measurement'' shall be defined as an evaluation where quantitative data is obtained (e.g., resistance in ohms, structural return loss in decibels (dB), etc.) and a ''test'' shall be defined as an evaluation where no quantitative data is obtained (e.g., a check mark indicating conformance is usually the result of the test).

(d) The sequence of tests and measurements described in this standard have been prepared as a guide. Variations from the sequence may be necessary on an individual application basis.

(e) There is some overlap in the methods of testing shown; also, the extent of each phase of testing may vary on an individual basis. The borrower shall determine the overall plan of testing, the need and extent of testing, and the responsibility for each phase of testing.

**§ 1755.402 Ground resistance measurements.**

(a) The resistance of the central office (CO) and the remote switching terminal (RST) ground shall be measured before and after it has been bonded to the master ground bar (MGB) where it is connected to the building electric service ground.

(b) The ground resistance of electronic equipment such as span line repeaters, carrier terminal equipment, concentrators, etc. shall be measured.

(c) *Method of measurement.* The connection of test equipment for the ground resistance measurement shall be as shown in Figure 1. Refer to RUS Bulletin 1751F–802, ''Electrical Protection Grounding Fundamentals,'' for a comprehensive discussion of ground resistance measurements.

(d) *Test equipment.* The test equipment for making this measurement is shown in Figure 1 as follows:

BILLING CODE 3410–15–P

FIGURE 1

GROUND RESISTANCE MEASUREMENT (1), (2)

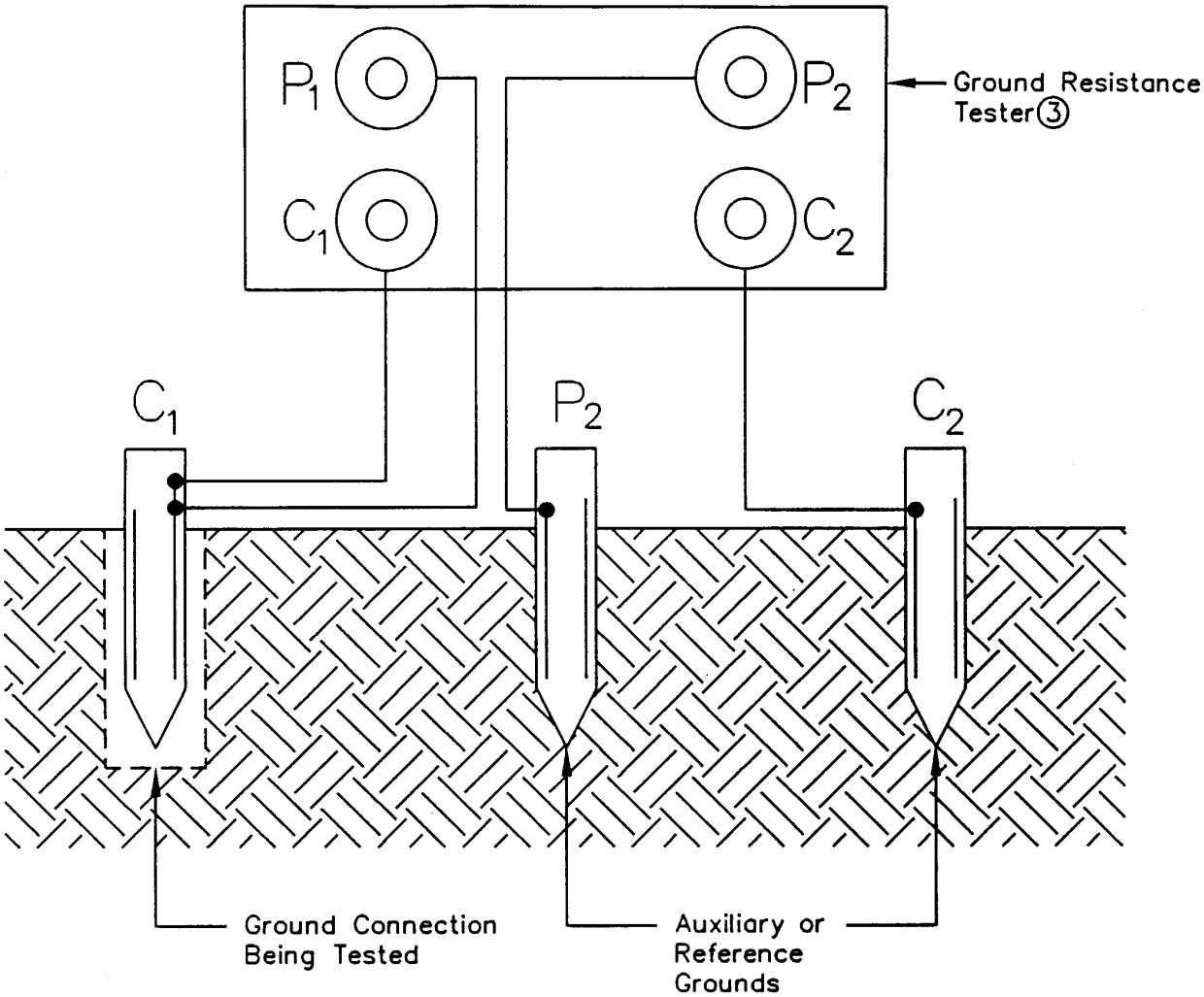


Notes:

(1.) Measurement procedure for COs, RSTs, and electronic equipment housings approximately 10 ft by 10 ft (3 m by 3m) or smaller shall be as follows: The minimum distance between the CO ground ($C_1$) being tested and $C_2$ = 100 ft (30.5 m). Take several measurements moving $P_2$ from 50 ft to 75 ft (15.2 m to 23 m) away from CO ground $C_2$. Resistance should initially rise then level off and then start rising again. The value to record for CO ground resistance is the value where it levels off which usually should occur with $P_2$ at 62 % of the distance between the CO ground and $C_2$.

(2.) Measurement procedure for COs, RSTs, and electronic equipment housings larger than 10 ft by 10 ft (3 m by 3 m) shall be in accordance with the test equipment manufacturer's instructions.

(3.) Dynatel Research–Vibroground, General Radio–Megger Bridge, Associate Research–Megohm Meter or equivalent.

BILLING CODE 3410–15–C

(e) *Applicable results.* (1) For the CO and RST, the resistance after the bond has been made to the MGB electric service ground shall not exceed 5 ohms. Where the measured ground resistance exceeds 5 ohms, the borrower shall determine what additional grounding, if any, shall be provided.

(2) For electronic equipment, the ground resistance shall not exceed 25 ohms. Where the measured ground resistance exceeds 25 ohms, the borrower shall determine what additional grounding, if any, shall be provided.

(3) When ground resistance measurements exceed the ground resistance requirements of paragraphs (e)(1) and (e)(2) of this section, refer to RUS Bulletin 1751F–802, ''Electrical Protection Grounding Fundamentals,'' for suggested methods of reducing the ground resistance.

(f) *Data record.* Results of the CO and RST ground resistance measurements shall be recorded. A suggested format similar to Format I, Outside Plant Acceptance Tests—Subscriber Loops, in § 1755.407 or a format specified in the applicable construction contract may be used. Results of the electronic equipment ground resistance measurements shall be recorded. A suggested format similar to Format II, Outside Plant Acceptance Tests—Trunk Circuits, in § 1755.407 or a format specified in the applicable construction contract may be used. Data showing approximate moisture content of the soil at the time of measurement, the temperature, the type of soil and a description of the test equipment used shall also be included.

(g) *Probable causes for nonconformance.* Refer to RUS Bulletin 1751F–802, ''Electrical Protection Grounding Fundamentals,'' and Telecommunications Engineering and Construction Manual (TE&CM) Section 810, ''Electrical Protection of Electronic Analog and Digital Central Office Equipment,'' for possible causes of nonconformance and suggested methods for corrective action.

**§ 1755.403 Copper cable telecommunications plant measurements.**

(a) *Shield or shield/armor continuity.* (1) Tests and measurements shall be made to ensure that cable shields or shield/armors are electrically continuous. There are two areas of concern. The first is shield or shield/armor bonding within a pedestal or splice and the second is shield or shield/armor continuity between pedestals or splices.

(2) Measurement techniques outlined here for verification of shield or shield/armor continuity are applicable to buried cable plant. Measurements of shield continuity between splices in aerial cable plant should be made prior to completion of splicing. Conclusive results cannot be obtained on aerial plant after all bonds have been completed to the supporting strand, multigrounded neutral, etc.

(3) *Method of measurement.* (i) The shield or shield/armor resistance measurements shall be made between pedestals or splices using either a Wheatstone bridge or a volt-ohm meter. For loaded plant, measurements shall be made on cable lengths that do not exceed one load section. For nonloaded plant, measurements shall be made on cable lengths that do not exceed 5,000 feet (ft) (1,524 meters (m)). All bonding wires shall be removed from the bonding lugs at the far end of the cable section to be measured. The step-by-step measurement procedure shall be as shown in Figure 2.

(ii) Cable shield or shield/armor continuity within pedestals or splices shall be measured with a cable shield splice continuity test set. The step-by-step measurement procedure outlined in the manufacturer's operating instructions for the specific test equipment being used shall be followed.

(4) *Test equipment.* (i) The test equipment for measuring cable shield or shield/armor resistance between pedestals or splices is shown in Figure 2 as follows:

BILLING CODE 3410–15–P

# FIGURE 2

## SHIELD OR SHIELD/ARMOR RESISTANCE MEASUREMENT

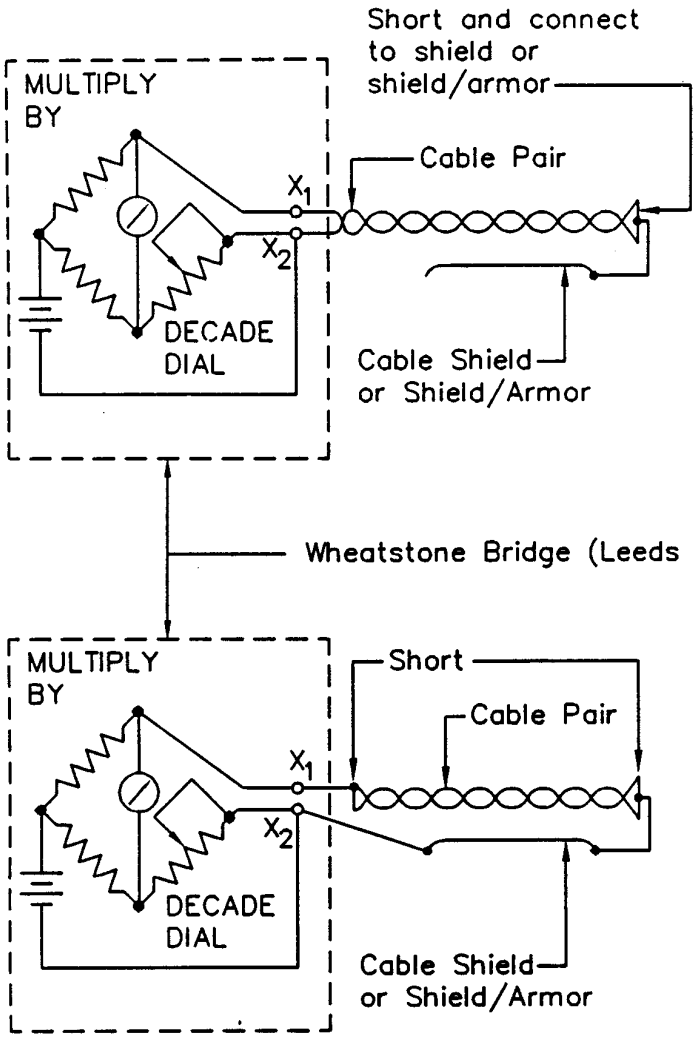


STEP 1

SETTINGS ON TEST SET

A. Set "RES.–VAR–MUR" Key to "RES".
B. Set "RVM–GA–HIL" Switch to "RVM".
C. Set "INT–BA–EXT" Switch to "INT".
D. Connect Pair to Terminals $X_1$ and $X_2$ as shown.

PROCEDURE

E. Null galvanometer by operating "MULTIPLY BY" and "DECADE" dials of bridge. Use lowest sensitivity range.
F. Multiply "DECADE" reading in ohms by "MULTIPLY BY" ratio to obtain value of the Loop Resistance ($R_1$). Record this value.

STEP 2

SETTINGS ON TEST SET

A. Set Keys and Switches as in STEP 1, A through C, above.
B. Connect Shorted Pair and Shield to Terminals $X_1$ and $X_2$ as shown.

PROCEDURE

C. Null galvanometer as in STEP 1, E, above.
D. Obtain value of Resistance ($R_2$) as in STEP 1, F, above.

STEP 3

COMPUTE THE SHIELD OR SHIELD/ARMOR RESISTANCE ($R_S$)

$$R_S = R_2 - \frac{R_1}{4}$$

BILLING CODE 3410–15–C

(ii) A cable shield splice continuity tester shall be used to measure shield or shield/armor continuity within pedestals or splices.

(5) *Applicable results.* (i) The shield or shield/armor resistance per 1000 ft and per kilometer (km) for cable diameters and types of shielding materials are given in Table 1 (English Units) and Table 2 (Metric Units), respectively as follows:

TABLE 1.—SHIELD RESISTANCE @ 68 °F (20°C) CABLE DIAMETERS VERSUS SHIELD TYPES

[English Units]

| Outside diameter inches (in.) | Nominal resistance ohm/1000 ft. | | | | | |
|---|---|---|---|---|---|---|
| | A | B | C | D | E | F |
| 0.40–0.49 | 0.77 | 1.54 | 1.65 | 1.96 | 2.30 | 5.51 |
| 0.50–0.59 | 0.64 | 1.28 | 1.37 | 1.63 | 1.91 | 4.58 |
| 0.60–0.69 | 0.51 | 1.03 | 1.10 | 1.31 | 1.53 | 3.67 |
| 0.70–0.79 | 0.44 | 0.88 | 0.94 | ..... | 1.31 | 3.14 |
| 0.80–0.89 | 0.38 | 0.77 | 0.82 | ..... | 1.14 | 2.74 |
| 0.90–0.99 | 0.35 | 0.69 | 0.74 | ..... | 1.03 | 2.47 |
| 1.00–1.09 | 0.31 | 0.62 | 0.66 | ..... | 0.92 | 2.20 |
| 1.10–1.19 | 0.28 | 0.56 | 0.60 | ..... | 0.84 | 2.00 |
| 1.20–1.29 | 0.26 | 0.51 | 0.55 | ..... | 0.77 | 1.84 |
| 1.30–1.39 | 0.24 | 0.48 | 0.51 | ..... | 0.71 | 1.70 |
| 1.40–1.49 | 0.22 | 0.44 | 0.47 | ..... | 0.65 | 1.57 |
| 1.50–1.59 | 0.21 | 0.41 | 0.44 | ..... | 0.61 | 1.47 |
| 1.60–1.69 | 0.19 | 0.38 | 0.41 | ..... | 0.57 | 1.37 |
| 1.70–1.79 | 0.18 | 0.37 | 0.39 | ..... | 0.54 | 1.30 |
| 1.80–1.89 | 0.17 | 0.35 | 0.37 | ..... | 0.51 | 1.24 |
| 1.90–1.99 | 0.16 | 0.33 | 0.35 | ..... | 0.49 | 1.17 |
| 2.00–2.09 | 0.15 | 0.31 | 0.33 | ..... | 0.46 | 1.10 |
| 2.10–2.19 | 0.15 | 0.29 | 0.31 | ..... | 0.43 | 1.03 |
| 2.20–2.29 | 0.14 | 0.28 | 0.30 | ..... | 0.42 | 1.00 |
| 2.30–2.39 | 0.14 | 0.27 | 0.29 | ..... | 0.40 | 0.97 |
| 2.40–2.49 | 0.13 | 0.25 | 0.27 | ..... | 0.38 | 0.90 |
| 2.50–2.59 | 0.12 | 0.24 | 0.26 | ..... | 0.36 | 0.87 |
| 2.60–2.69 | 0.12 | 0.23 | 0.25 | ..... | 0.35 | 0.83 |
| 2.70–2.79 | 0.11 | 0.22 | 0.24 | ..... | 0.33 | 0.80 |
| 2.80–2.89 | 0.11 | 0.22 | 0.24 | ..... | 0.33 | 0.80 |
| 2.90–2.99 | 0.11 | 0.22 | 0.23 | ..... | 0.32 | 0.77 |
| 3.00–3.09 | 0.10 | 0.21 | 0.22 | ..... | 0.31 | 0.73 |
| 3.10–3.19 | 0.10 | 0.20 | 0.21 | ..... | 0.29 | 0.70 |
| 3.20–3.29 | 0.10 | 0.20 | 0.21 | ..... | 0.29 | 0.70 |
| 3.30–3.39 | 0.09 | 0.19 | 0.20 | ..... | 0.28 | 0.67 |
| 3.40–3.49 | 0.09 | 0.18 | 0.19 | ..... | 0.26 | 0.63 |
| 3.50–3.59 | 0.09 | 0.18 | 0.19 | ..... | 0.26 | 0.63 |
| 3.60–3.69 | 0.08 | 0.17 | 0.18 | ..... | 0.25 | 0.60 |
| 3.70–3.79 | 0.08 | 0.17 | 0.18 | ..... | 0.25 | 0.60 |
| 3.80–3.89 | 0.08 | 0.16 | 0.17 | ..... | 0.24 | 0.57 |
| 3.90–3.99 | 0.08 | 0.16 | 0.17 | ..... | 0.24 | 0.57 |
| 4.00–4.99 | 0.07 | 0.15 | 0.16 | ..... | 0.22 | 0.53 |

*Where:* Column A–10 mil Copper shield.
Column B—5 mil Copper shield.
Column C—8 mil Coated Aluminum and 8 mil Coated Aluminum/6 mil Coated Steel shields.
Column D—7 mil Alloy 194 shield.
Column E—6 mil Alloy 194 and 6 mil Copper Clad Stainless Steel shields.
Column F—5 mil Copper Clad Stainless Steel and 5 mil Copper Clad Alloy Steel shields.

TABLE 2.—SHIELD RESISTANCE @ 68°F (20°C) CABLE DIAMETERS VERSUS SHIELD TYPES

[Metric Units]

| Outside diameter millimeters (mm) | Nominal Resistance ohm/km | | | | | |
|---|---|---|---|---|---|---|
| | A | B | C | D | E | F |
| 10.2—12.5 | 2.53 | 5.05 | 5.41 | 6.43 | 7.55 | 18.08 |
| 12.7—15.0 | 2.10 | 4.20 | 4.49 | 5.35 | 6.27 | 15.03 |
| 15.2—17.5 | 1.67 | 3.38 | 3.61 | 4.30 | 5.02 | 12.04 |
| 17.8—20.1 | 1.44 | 2.89 | 3.08 | ..... | 4.30 | 10.30 |
| 20.3—22.6 | 1.25 | 2.53 | 2.69 | ..... | 3.74 | 8.99 |
| 22.9—25.1 | 1.15 | 2.26 | 2.43 | ..... | 3.38 | 8.10 |
| 25.4—27.7 | 1.02 | 2.03 | 2.16 | ..... | 3.02 | 7.22 |
| 27.9—30.2 | 0.92 | 1.84 | 1.97 | ..... | 2.76 | 6.56 |
| 30.5—32.8 | 0.85 | 1.67 | 1.80 | ..... | 2.53 | 6.04 |
| 33.0—35.3 | 0.79 | 1.57 | 1.67 | ..... | 2.33 | 5.58 |
| 35.6—37.8 | 0.72 | 1.44 | 1.54 | ..... | 2.13 | 5.15 |
| 38.1—40.4 | 0.69 | 1.34 | 1.44 | ..... | 2.00 | 4.82 |

TABLE 2.—SHIELD RESISTANCE @ 68°F (20°C) CABLE DIAMETERS VERSUS SHIELD TYPES—Continued

[Metric Units]

| Outside diameter millimeters (mm) | Nominal Resistance ohm/km | | | | | |
|---|---|---|---|---|---|---|
| | A | B | C | D | E | F |
| 40.6—42.9 | 0.62 | 1.25 | 1.34 | ..... | 1.87 | 4.49 |
| 43.2—45.5 | 0.59 | 1.21 | 1.28 | ..... | 1.77 | 4.26 |
| 45.7—48.0 | 0.56 | 1.15 | 1.21 | ..... | 1.67 | 4.07 |
| 48.3—50.5 | 0.52 | 1.08 | 1.15 | ..... | 1.61 | 3.84 |
| 50.8—53.1 | 0.49 | 1.02 | 1.08 | ..... | 1.51 | 3.61 |
| 53.3—55.6 | 0.49 | 0.95 | 1.02 | ..... | 1.41 | 3.38 |
| 55.9—58.2 | 0.46 | 0.92 | 0.98 | ..... | 1.38 | 3.28 |
| 58.4—60.7 | 0.46 | 0.89 | 0.95 | ..... | 1.31 | 3.18 |
| 61.0—63.2 | 0.43 | 0.82 | 0.89 | ..... | 1.25 | 2.95 |
| 63.5—65.8 | 0.39 | 0.79 | 0.85 | ..... | 1.18 | 2.85 |
| 66.0—68.3 | 0.39 | 0.75 | 0.82 | ..... | 1.15 | 2.72 |
| 68.6—70.9 | 0.36 | 0.72 | 0.79 | ..... | 1.08 | 2.62 |
| 71.1—73.4 | 0.36 | 0.72 | 0.79 | ..... | 1.08 | 2.62 |
| 73.7—75.9 | 0.36 | 0.72 | 0.75 | ..... | 1.05 | 2.53 |
| 76.2—78.5 | 0.33 | 0.69 | 0.72 | ..... | 1.02 | 2.39 |
| 78.7—81.0 | 0.33 | 0.66 | 0.69 | ..... | 0.95 | 2.30 |
| 81.3—83.6 | 0.33 | 0.66 | 0.69 | ..... | 0.95 | 2.30 |
| 83.6—86.1 | 0.29 | 0.62 | 0.66 | ..... | 0.92 | 2.20 |
| 86.4—88.6 | 0.29 | 0.59 | 0.62 | ..... | 0.85 | 2.07 |
| 88.9—91.2 | 0.29 | 0.59 | 0.62 | ..... | 0.85 | 2.07 |
| 91.4—93.7 | 0.26 | 0.56 | 0.59 | ..... | 0.82 | 1.97 |
| 94.0—96.3 | 0.26 | 0.56 | 0.59 | ..... | 0.82 | 1.97 |
| 96.5—98.8 | 0.26 | 0.52 | 0.56 | ..... | 0.79 | 1.87 |
| 99.1—101.3 | 0.26 | 0.52 | 0.56 | ..... | 0.79 | 1.87 |
| 101.6—103.9 | 0.23 | 0.49 | 0.52 | ..... | 0.72 | 1.74 |

Where: Column A—10 mil Copper shield.
Column B—5 mil Copper shield.
Column C—8 mil Coated Aluminum and 8 mil Coated Aluminum/6 mil Coated Steel shields.
Column D—7 mil Alloy 194 shield.
Column E—6 mil Alloy 194 and 6 mil Copper Clad Stainless Steel shields.
Column F—5 mil Copper Clad Stainless Steel and 5 mil Copper Clad Alloy Steel shields.

(ii) All values of shield and shield/armor resistance provided in Tables 1 and 2 in (a)(5)(i) of this section are considered approximations. If the measured value corrected to 68°F (20°C) is within ±30 percent (%) of the value shown in Table 1 or 2, the shield and shield/armor shall be assumed to be continuous.

(iii) To correct the measured shield resistance to the reference temperature of 68°F (20°C) use the following formulae:

$R_{68}=Rt/[1+A(t-68)]$ for English Units

$R_{20}=Rt/[1+A(t-20)]$ for Metric Units

Where:

$R_{68}$=Shield resistance corrected to 68°F in ohms.

$R_{20}$=Shield resistance corrected to 20°C in ohms.

$R_t$=Shield resistance at measurement temperature in ohms.

A=Temperature coefficient of the shield tape.

t=Measurement temperature in °F or (°C).

(iv) The temperature coefficients (A) for the shield tapes to be used in the formulae referenced in paragraph (a)(5)(iii) of this section are as follows:

(A) 5 and 10 mil copper = 0.0021 for English units and 0.0039 for Metric units;

(B) 8 mil coated aluminum and 8 mil coated aluminum/6 mil coated steel = 0.0022 for English units and 0.0040 for Metric units;

(C) 5 mil copper clad stainless steel and 5 mil copper clad alloy steel = 0.0024 for English units and 0.0044 for Metric units;

(D) 6 mil copper clad stainless steel = 0.0019 for English units and 0.0035 for Metric units; and

(E) 6 and 7 mil alloy 194 = 0.0013 for English units and 0.0024 for Metric units.

(v) When utilizing shield continuity testers to measure shield and shield/armor continuity within pedestals or splices, refer to the manufacturer's published information covering the specific test equipment to be used and for anticipated results.

(6) *Data record*. Measurement data from shield continuity tests shall be recorded together with anticipated Table 1 or 2 values (see paragraph (a)(5)(i) of this section) in an appropriate format to permit comparison. The recorded data shall include specific location, cable size, cable type, type of shield or shield/armor, if known, etc.

(7) *Probable causes for nonconformance*. Among probable causes for nonconformance are broken or damaged shields or shield/armors, bad bonding harnesses, poorly connected bonding clamps, loose bonding lugs, etc.

(b) *Conductor continuity*. After placement of all cable and wire plant has been completed and joined together in continuous lengths, tests shall be made to ascertain that all pairs are free from grounds, shorts, crosses, and opens, except for those pairs indicated as being defective by the cable manufacturer. The tests for grounds, shorts, crosses, and opens are not separate tests, but are inherent in other acceptance tests discussed in this section. The test for grounds, shorts, and crosses is inherent when conductor insulation resistance measurements are conducted per paragraph (c) of this section, while tests for opens are inherent when tests are conducted for loop resistance, insertion loss, noise, or return loss measurements, per paragraphs (d), (e), or (f) of this section. The borrower shall make certain that all defective pairs are corrected, except

those noted as defective by the cable manufacturer in accordance with the marking provisions of the applicable cable and wire specifications. All defective pairs that are not corrected shall be reported in writing with details of the corrective measures attempted.

(c) *Dc insulation resistance (IR) measurement.* (1) IR measurements shall be made on completed lengths of insulated cable and wire plant.

(2) *Method of measurement.* (i) The IR measurement shall be made between each conductor and all other conductors, sheath, shield and/or shield/armor, and/or support wire electrically connected together and to the main distributing frame (MDF) ground. The measurement shall be made from the central office with the entire length of the cable under test and, where used with all protectors and load coils connected. For COs containing solid state arresters, the solid state arresters shall be removed before making the IR measurements. Field mounted voice frequency repeaters, where used, may be left connected for the IR test but all carrier frequency equipment, including carrier repeaters and terminals, shall be disconnected. Pairs used to feed power remote from the CO shall have the power disconnected and the tip and ring conductors shall be opened before making IR tests. All conductors shall be opened at the far end of the cable being measured.

(ii) IR tests are normally made from the MDF with all CO equipment disconnected at the MDF, but this test may be made on new cables at field locations before they are spliced to existing cables. The method of measurement shall be as shown in Figure 3 as follows:

BILLING CODE 3410–15–P

# FIGURE 3

## DC INSULATION RESISTANCE MEASUREMENT

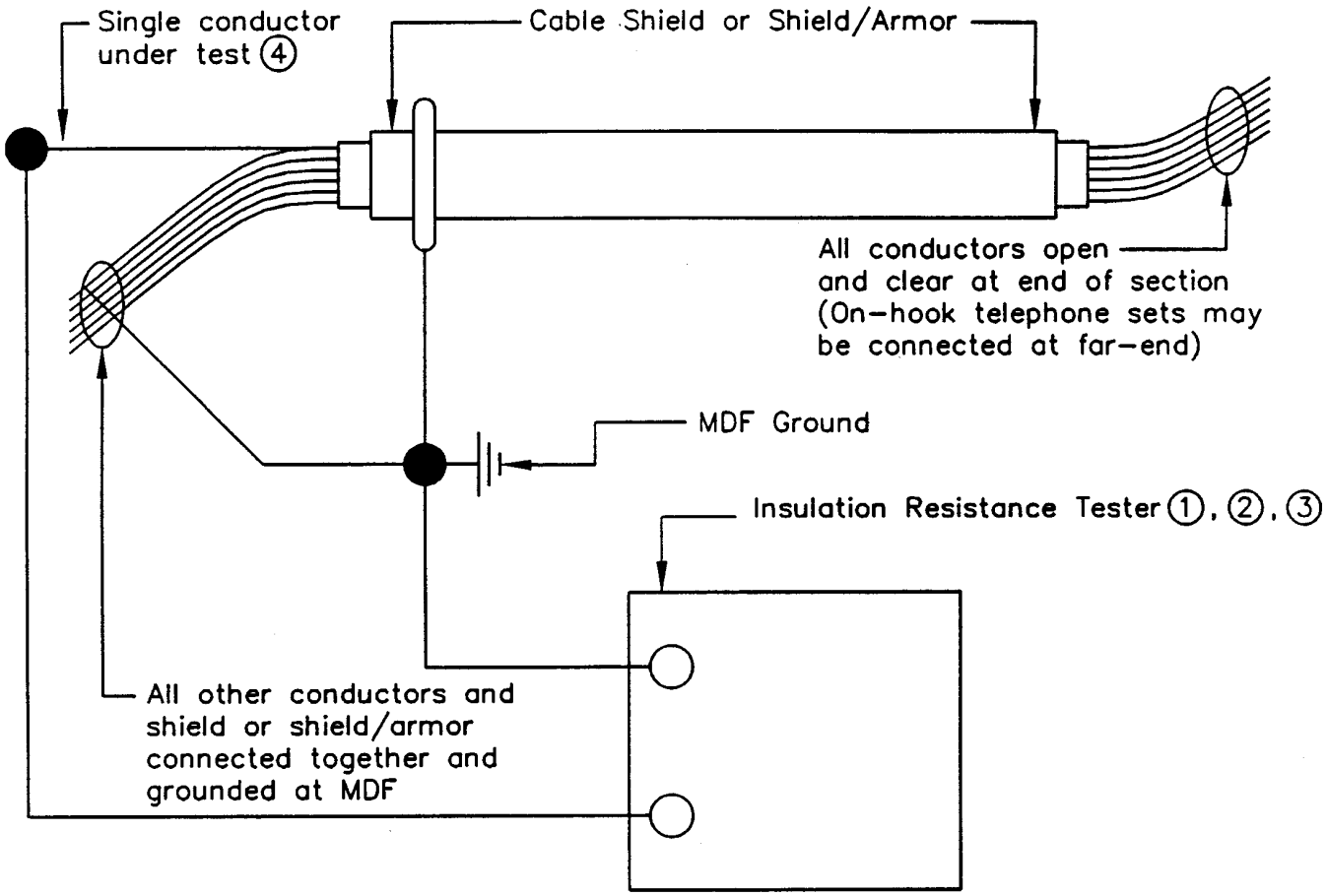


Notes:

1. For hand cranked or battery operated Insulation Resistance Testers, the output voltage should not exceed 500 volts dc.

2. For dc bridge type Megohmmeters, the voltage applied to the conductors under test should not exceed 250 volts dc when using instruments having adjustable test voltage levels.

3. Biddle CO.–Model BM 200, Associate Research–Model 263, General Radio–1864 Megohm Meter, or equivalent.

4. Repeat test for each conductor in cable.

BILLING CODE 3410–15–C

(iii) If the IR of the conductor cannot be measured because of breakdown of lightning arresters by the test voltage, the arrester units shall be removed and the conductor IR retested. If the IR then meets the minimum requirements, the conductor will be considered satisfactory. Immediately following the IR tests, all arrester units which have been removed shall be reinstalled.

(3) *Test equipment.* (i) IR measurements shall be made with either an insulation resistance test set or a direct current (dc) bridge type megohmmeter.

(ii) The IR test set shall have an output voltage not to exceed 500 volts dc and shall be of the hand cranked or battery operated type.

(iii) The dc bridge type megohmmeter, which may be alternating current (ac) powered, shall have scales and multiplier which make it possible to accurately read IR from 1 megohm to 1 gigohm. The voltage applied to the conductors under test shall not exceed ''250 volts dc'' when using an instrument having adjustable test voltage levels. This will help to prevent breakdown of lightning arresters.

(4) *Applicable results.* (i) For all new insulated cable or wire facilities, the expected IR levels are normally greater than 1,000 to 2,000 megohm-mile (1,609 to 3,218 megohm-km). A value of 500 megohm-mile (805 megohm-km) at 68°F (20°C) shall be the minimum acceptable value of IR. IR varies inversely with the length and the temperature.

(ii) The megohm-mile (megohm-km) value for a conductor may be computed by multiplying the actual scale reading in megohms on the test set by the length in miles (km) of the conductor under test.

(iii) The objective insulation resistance may be determined by dividing 500 by the length in miles (805 by the length in km) of the cable or wire conductor being tested. The resulting value shall be the minimum acceptable meter scale reading in megohms.

(iv) Due to the differences between various insulating materials and filling compounds used in manufacturing cable or wire, it is impractical to provide simple factors to predict the magnitude of variation in insulation resistance due to temperature. The variation can, however, be substantial for wide excursions in temperature from the ambient temperature of 68 °F (20 °C).

(v) Borrowers should be certain that tip and ring IR measurements of each pair are approximately the same. Borrowers should also be certain that IR measurements are similar for cable or wire sections of similar length and cable or wire type. If some pairs measure significantly lower, borrowers should attempt to improve these pairs in accordance with cable manufacturer's recommendations.

**Note:** Only the megohm-mile (megohm-km) requirement shall be cause for rejection, not individual measurement differences.

(5) *Data record.* The measurement data shall be recorded. Suggested formats similar to Format I, Outside Plant Acceptance Tests—Subscriber Loops, or Format II, Outside Plant Acceptance Tests—Trunk Circuits, in § 1755.407 or formats specified in the applicable construction contract may be used.

(6) *Probable causes for nonconformance.* (i) When an IR measurement is below 500 megohm-mile (805 megohm-km), the cable or wire temperature at the time of testing must then be taken into consideration. If this temperature is well above 68 °F (20 °C), the measurement shall be disregarded and the cable or wire shall be remeasured at a time when the temperature is approximately 68 °F (20 °C). If the result is then 500 megohm-mile (805 megohm-km) or greater, the cable or wire shall be considered satisfactory.

(ii) Should the cable or wire fail to meet the 500 megohm-mile (805 megohm-km) requirement when the temperature is known to be approximately 68 °F (20 °C) there is not yet justification for rejection of the cable or wire. Protectors, lightning arresters, etc., may be a source of low insulation resistance. These devices shall be removed from the cable or wire and the cable or wire IR measurement shall be repeated. If the result is acceptable, the cable or wire shall be considered acceptable. The removed devices which caused the low insulation resistance value shall be identified and replaced, if found defective.

(iii) When the cable or wire alone is still found to be below the 500 megohm-mile (805 megohm-km) requirement after completing the steps in paragraph (c)(6)(i) and/or paragraph (c)(6)(ii) of this section, the test shall be repeated to measure the cable or wire in sections to isolate the piece(s) of cable or wire responsible. The cable or wire section(s) that is found to be below the 500 megohm-mile (805 megohm-km) requirement shall be either repaired in accordance with the cable or wire manufacturer's recommended procedure or shall be replaced as directed by the borrower.

(d) *Dc loop resistance and dc resistance unbalance measurement.* (1) When specified by the borrower, dc loop resistance and dc resistance unbalance measurements shall be made on all cable pairs used as trunk circuits. The dc loop resistance and dc resistance unbalance measurements shall be made between CO locations. Measurements shall include all components of the cable path.

(2) Dc loop resistance and dc resistance unbalance measurements shall be made on all cable pairs used as subscriber loop circuits when:

(i) Specified by the borrower;

(ii) A large number of long loops terminate at one location (similar to trunk circuits); or

(iii) Circuit balance is less than 60 dB when computed from noise measurements as described in paragraph (e) of this section.

(3) Dc resistance unbalance is controlled to the maximum possible degree by the cable specification. Allowable random unbalance is specified between tip and ring conductors within each reel. Further random patterns should occur when the cable conductor size changes. Cable meeting the unbalance requirements of the cable specification may under some conditions result in unacceptable noise levels as discussed in paragraph (d)(6)(iii) of this section.

(4) *Method of measurement.* The method of measurement shall be as detailed in Figures 4 and 5.

(5) *Test equipment.* The test equipment is shown in Figures 4 and 5 as follows:

BILLING CODE 3410–15–P

# FIGURE 4

## DC LOOP RESISTANCE MEASUREMENT

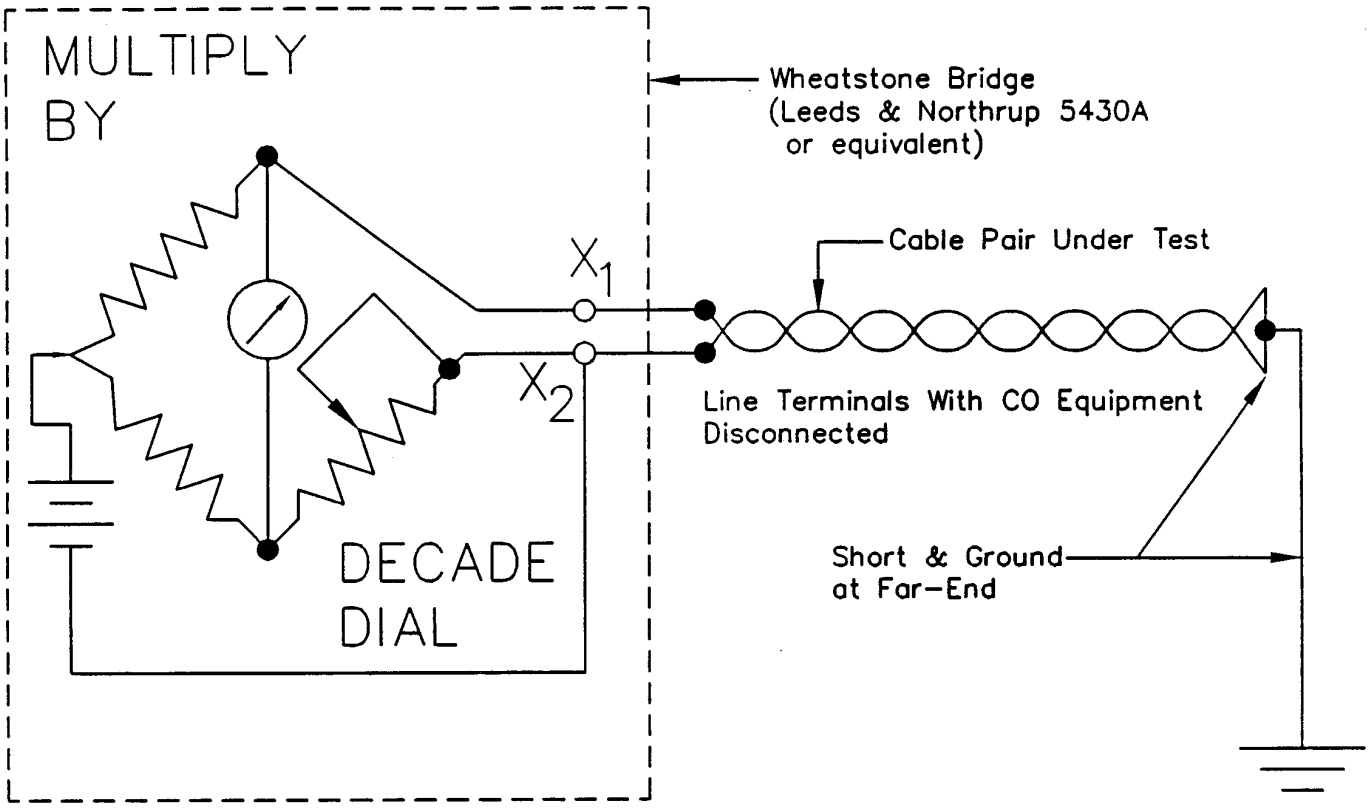


SETTINGS ON TEST SET

1. Set "RES.–VAR–MUR" Key to "RES".
2. Set "RVM–GA–HIL" Switch to "RVM".
3. Set "INT–BA–EXT" Switch to "INT".
4. Connect Pair to Terminals $X_1$ and $X_2$ as shown.

PROCEDURE

1. Null galvanometer by operating "MULTIPLY BY" and "DECADE" dials of bridge. Use lowest sensitivity range.

2. Multiply "DECADE" reading in ohms by "MULTIPLY BY" ratio to obtain value of the Loop Resistance.

# FIGURE 5

## DC LOOP RESISTANCE UNBALANCE MEASUREMENT

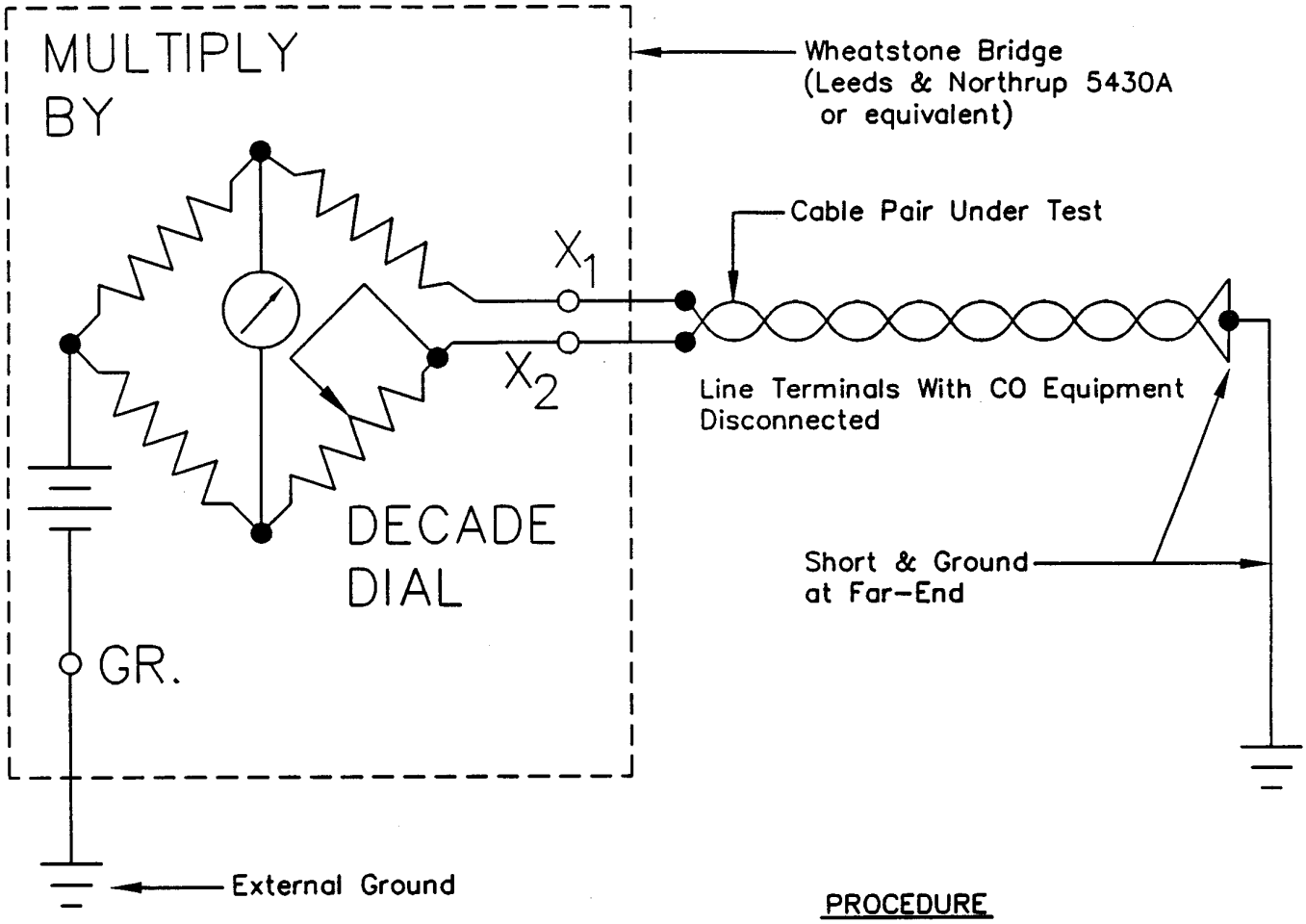


**SETTINGS ON TEST SET**

1. Connect Terminals $X_1$ & $X_2$ as shown.
2. Set "RES.–VAR–MUR" Key to "VAR".
3. "MULTIPLY BY" Switch to 1/1.
4. Set "RVM–GA–HIL" Switch to "RVM".
5. Set "INT–BA–EXT" Switch to "INT".

**PROCEDURE**

1. Null galvanometer by operating "MULTIPLY BY" and "DECADE" dials of bridge. Use lowest sensitivity range.
2. If continuously varying 1, 10, or 100 ohm switches from 1 to 999 ohms produces a deflection consistently to the left on the galvanometer, reverse the conductors of the cable pair under test to the $X_1$ & $X_2$ terminals of the bridge.
3. Vary 1, 10, or 100 ohm switches again until deflection approaches zero. Read "DECADE" dial for Resistance Unbalance in ohms.

BILLING CODE 3410–15–C

(6) *Applicable results.* (i) The measured dc loop resistance shall be within ± 5% of the calculated dc loop resistance when corrected for temperature.

(ii) The calculated dc loop resistance is computed as follows:

(A) Multiply the length of each different gauge by the applicable resistance per unit length as shown in Table 3 as follows:

TABLE 3.—DC LOOP RESISTANCE @ 68°F (20°C)

| American wire gauge (AWG) | Loop resistance | |
|---|---|---|
| | ohms/1000 ft | ohms/km |
| 19 | 16.1 | 52.8 |
| 22 | 32.4 | 106.3 |
| 24 | 51.9 | 170.3 |
| 26 | 83.3 | 273.3 |

(B) Add the individual resistances for each gauge to give the total calculated dc loop resistance at a temperature of 68°F (20°C).

(C) Correct the total calculated dc loop resistance at the temperature of 68°F (20°C) to the measurement temperature by the following formulae:

$R_t=R_{68}\times[1+0.0022\times t—68)]$ for English Units

$R_t=R_{20}\times[1+0.0040\times(t—20)]$ for Metric Units

Where:

$R_t$ = Loop resistance at the measurement temperature in ohms.

$R_{68}$ = Loop resistance at a temperature of 68°F in ohms.

$R_{20}$ = Loop resistance at a temperature of 20°C in ohms.

t = Measurement temperature in °F or (°C).

(D) Compare the calculated dc loop resistance at the measurement temperature to the measured dc loop resistance to determine compliance with the requirement specified in paragraph (d)(6)(i) of this section.

(iii) Resistance varies directly with temperature change. For copper conductor cables, the dc resistance changes by ± 1% for every ± 5°F (2.8°C) change in temperature from 68°F (20°C).

(iv) The dc resistance unbalance between the individual conductors of a pair shall not exceed that value which will result in a circuit balance of less than 60 dB when computed from noise measurements as described in paragraph (e) of this section. It is impractical to establish a precise limit for overall circuit dc resistance unbalance due to the factors controlling its contribution to circuit noise. These factors include location of the resistance unbalance in relation to a low impedance path to ground (close to the central office) and the magnitude of unbalance in short lengths of cable making up the total circuit length. The objective is to obtain the minimum unbalance throughout the entire circuit when it is ascertained through noise measurements that dc resistance unbalance may be contributing to poor cable balance.

(v) Pairs with poor noise balance may be improved by reversing tip and ring conductors of pairs at cable splices. Where dc resistance unbalances are systematic over the total trunk circuit or loop circuit length, tip and ring reversals may be made at frequent intervals. Where the unbalances are concentrated in a shorter section of cable, only one tip and ring reversal should be required. Concentrated dc resistance unbalance produces maximum circuit noise when located adjacent to the central office. Concentrated dc resistance unbalance will contribute to overall circuit noise at a point approximately two-thirds (⅔) of the distance to the subscriber. All deliberate tip and ring reversals shall be tagged and identified to prevent plant personnel from removing the reversals when resplicing these connections in the future. The number of tip and ring reversals shall be held to a minimum.

(vi) A systematic dc resistance unbalance can sometimes be accompanied by other cable parameters that are marginal. Among these are pair-to-pair capacitance unbalance, capacitance unbalance-to-ground, and 150 kilohertz (kHz) crosstalk loss. Engineering judgment has to be applied in each case. Rejection of cable for excessive dc resistance unbalance shall only apply to a single reel length, or shorter.

(7) *Data record*. The measurement data for dc loop resistance and dc resistance unbalance shall be recorded. Suggested formats similar to Format I for subscriber loops and Format II for trunk circuits in § 1755.407 or formats specified in the applicable construction contract may be used.

(8) *Probable causes for nonconformance*. Dc loop resistance and dc resistance unbalance are usually the result of the resistance of individual conductors used in the manufacture of the cable. Resistance unbalance can be worsened by defective splicing of the conductors (splicing connectors, improper crimping tool, etc.).

(e) *Subscriber loop measurement (loop checking)*. (1) When specified by the borrower, insertion loss and noise measurements shall be performed on subscriber loops after connection of a line circuit to the loop by the one person method using loop checking equipment from the customer access location. For this method, the central office should be equipped with a 900 ohm plus two microfarad quiet termination and a milliwatt generator having the required test frequencies; or a portable milliwatt generator having the desired frequencies may be used, especially, where several small offices are involved.

(2) At a minimum, insertion loss and frequency response of subscriber loop plant shall be measured at 1,000, 1,700, 2,300, and 2,800 Hertz (Hz). When additional testing frequencies are desired, the additional frequencies shall be specified in the applicable construction contract.

(3) Measurements of insertion loss and noise shall be made on five percent or more of the pairs. A minimum of five pairs shall be tested on each route. Pairs shall be selected on a random basis with greater consideration in the selection given to the longer loops. Consideration shall be given to measuring a large percentage, up to 100 percent, of all loops.

(4) *Method of measurement*—(i) *Insertion loss*. The step-by-step measurement procedure shall be as shown in Figure 6. The output level of the milliwatt generator tones shall be determined prior to leaving the CO. This shall be accomplished by dialing the milliwatt generator number from a spare line at the MDF and measuring with the same equipment to be used in the tests at customer access locations. The output levels shall be recorded for reference later. Insertion loss measurements shall be made across the tip and ring terminals of the pair under test. Figure 6 is as follows:

BILLING CODE 3410–15–P

# FIGURE 6

## INSERTION LOSS AND FREQUENCY RESPONSE MEASUREMENT AT SUBSCRIBER LOCATION USING LOOP CHECKING EQUIPMENT

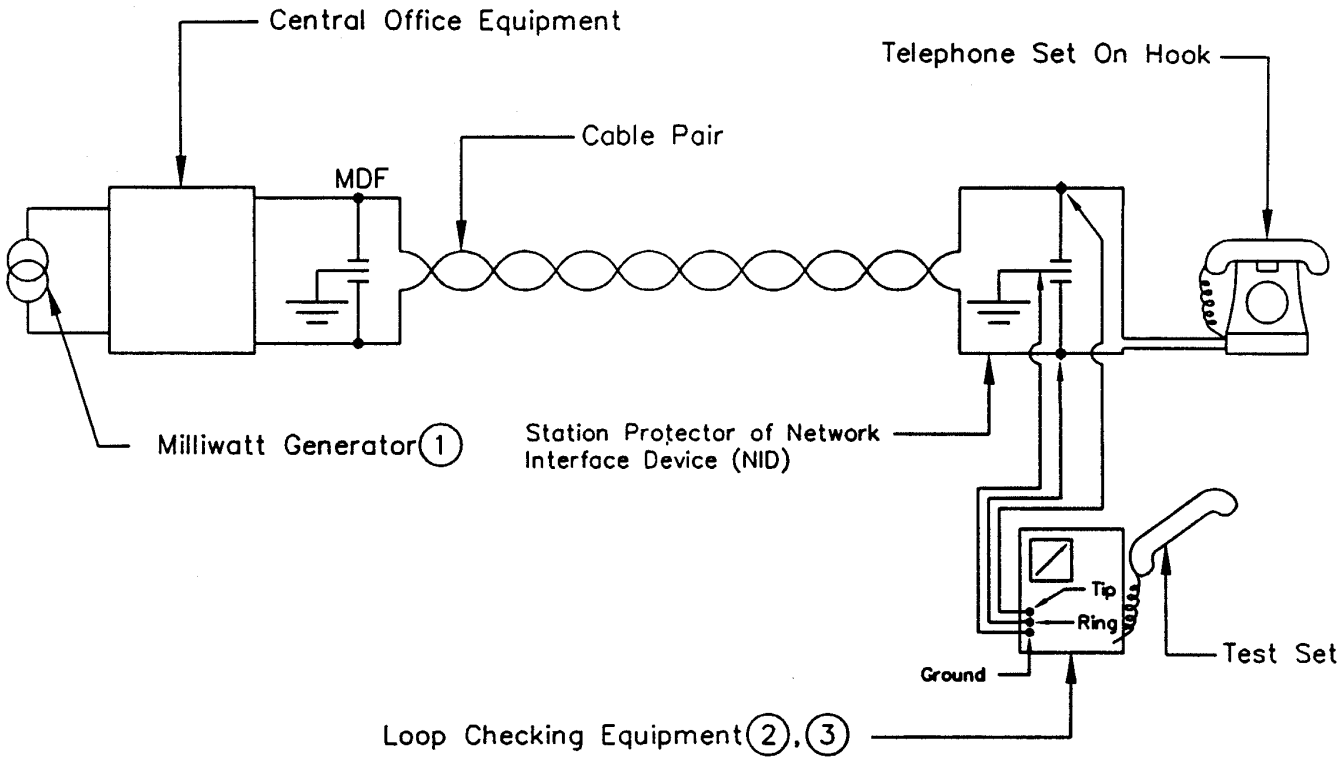


### Calibration

1. Before leaving CO connect Loop Checking equipment to idle line at MDF.

   A. Dial number of Milliwatt Generator.

   B. Read and record output level of all tones in dBm for reference.

Notes:

(1.) H.P.–204B, H.P.–204C, General Radio–1335, or equivalent.

(2.) N.E.C.–125, N.E.C.–37B, Wilcom–136, Wilcom–336, Wilcom–337, or equivalent.

(3.) Do not leave test equipment connected and exposed to ringing voltage of incoming call. Ringing voltage could damage test equipment.

### Measurement Procedure

1. Connect Loop Checking equipment at subscriber's NID as shown.
2. Dial number of Milliwatt Generator at central office.
3. Verify by listening on the test set that the tones are being received.
4. Switch test set to Circuit Loss mode.
5. Read loss in dBm at each frequency.
6. Record results of loss at each frequency.
7. Subtract the output levels observed at the CO for each tone by the values observed at the subscriber location. The resultant values are the Insertion Loss.
8. Disconnect leads of test equipment from NID when tests are completed.

BILLING CODE 3410–15–C

(ii) *Noise.* The step-by-step measurement procedure shall be as shown in Figure 7. Prior to leaving the CO for testing, dial the 900 ohm plus two microfarad quiet termination from a spare pair and measure the termination to determine that it actually is quiet. Circuit noise (noise-metallic) shall be measured at the customer access location across the tip and ring terminals of the pair under test. Power influence (direct reading with loop checking equipment) shall be measured at the customer access location from tip and ring conductors-to-ground (this connection is completed via the test unit). The power influence measurement includes the entire talking connection from the quiet termination to the customer. (That is, the power influence measurement includes all the CO equipment which normally makes up the connection.) Figure 7 is as follows:

BILLING CODE 3410–15–P

# FIGURE 7

## NOISE MEASUREMENT AT SUBSCRIBER LOCATION USING LOOP CHECKING EQUIPMENT

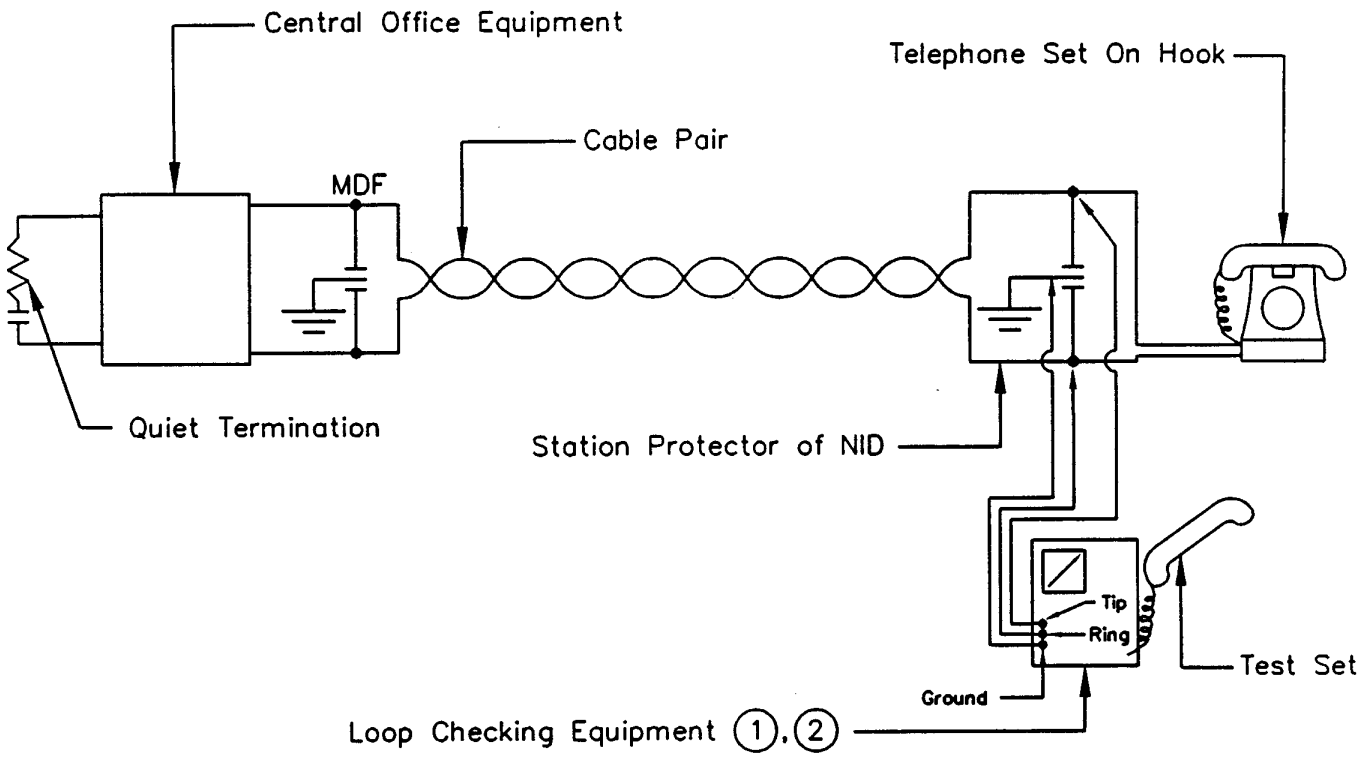


### Calibration

1. Before leaving CO connect Loop Checking equipment to idle line at MDF (no outside plant attached).

   A. Dial number of Quiet Termination.

   B. Read and record Circuit Noise in dBrnc.

Note:

(1.) N.E.C.–125, N.E.C.–37B, Wilcom–136, Wilcom–336, Wilcom–337, or equivalent.

(2.) Do not leave test equipment connected and exposed to ringing voltage of incoming call. Ringing voltage could damage test equipment.

### Measurement Procedure

1. Connect Loop Checking equipment at subscriber's NID as shown.
2. Dial number of Quiet Termination in cental office.
3. Switch test set to Circuit Noise (NM) mode.
4. Read and record Circuit Noise value in dBrnc.
5. Switch test set to Power Influence (PI) mode.
6. Read and record Power Influence value in dBrnc.
7. Compute and record apparent Balance (Balance = PI – NM).
8. Disconnect leads of test equipment from NID when tests are completed.

BILLING CODE 3410–15–C

(5) *Test equipment.* (i) Loop checking equipment which is available from several manufacturers may be used for these measurements. The equipment should have the capability of measuring loop current, insertion loss, circuit noise (NM) and power influence (PI). The test equipment manufacturer's operating instructions shall be followed.

(ii) There should be no measurable transmission loss when testing through loop extenders.

(6) *Applicable results—(i) Insertion loss.* (A) For D66 loaded cables (a specific loading scheme using a 66 millihenry inductor spaced nominally at 4,500 ft [1,371 m] intervals) measured at a point one-half section length beyond the last load point, the measured nonrepeated insertion loss shall be within ± 10% at 1000, 1700, 2300, and 2800 Hz, ± 15% at 3400 Hz and ± 20% at 4000 Hz of the calculated insertion loss at the same frequencies and temperature.

(B) For H88 loaded cables (a specific loading scheme using an 88 millihenry inductor spaced nominally at 6,000 ft [1,829 m] intervals) measured at a point one-half section length beyond the last load point, the measured nonrepeatered insertion loss shall be within ± 10% at 1000, 1700, and 2300 Hz, ± 15% at 2800 Hz, and ± 20% at 3400 Hz of the calculated insertion loss at the same frequencies and temperature.

(C) For nonloaded cables, the measured insertion loss shall be within ± 10% at 1000, 1700, 2300, and 2800 Hz, ± 15% at 3400 Hz and ± 20% at 4000 Hz of the calculated insertion loss at the same frequencies and temperature.

(D) For loaded cables, the calculated loss at each desired frequency shall be computed as follows:

(*1*) Multiply the length in miles (km) of each different gauge in the loaded portion of the loop (between the office and a point one-half load section beyond the furthest load point) by the applicable decibel (dB)/mile (dB/km) value shown in Table 4 or 5. This loss represents the total loss for each gauge in the loaded portion of the loop;

(*2*) Multiply the length in miles (km) of each different gauge in the end section or nonloaded portion of the cable (beyond a point one-half load section beyond the furthest load point) by the applicable dB/mile (dB/km) value shown in Table 6. This loss represents the total loss for each gauge in the nonloaded portion of the loop; and

(*3*) The total calculated insertion loss is computed by adding the individual losses determined in paragraphs (e)(6)(i)(D)(*1*) and (e)(6)(i)(D)(*2*) of this section.

(E) For nonloaded cables, the calculated loss at each desired frequency shall be computed by multiplying the length in miles (km) of each different gauge by the applicable dB/mile (dB/km) value shown in Table 6 and then adding the individual losses for each gauge to determine the total calculated insertion loss for the nonloaded loop.

(F) The attenuation information in Tables 4, 5, and 6 are based on a cable temperature of 68 °F (20 °C). Insertion loss varies directly with temperature. To convert measured losses for loaded cables to a different temperature, use the following value for copper conductors: For each ±5 °F ( ±2.8 °C) change in the temperature from 68 °F (20 °C), change the insertion loss at any frequency by ±1%. To convert measured losses for nonloaded cables to a different temperature, use the following value for copper conductors: For each ±10 °F (±5.6 °C) change in the temperature from 68 °F (20 °C), change the insertion loss at any frequency by ±1%. Tables 4, 5, and 6 are as follows:

TABLE 4.—FREQUENCY ATTENUATION @ 68 °F (20 °C) D66 LOADED EXCHANGE CABLES 83 NANOFARAD (NF)/MILE (52 NF/KM) (SEE NOTE)

| Frequency (Hz) | Attenuation dB/mile (dB/km) AWG | | | |
|---|---|---|---|---|
| | 19 | 22 | 24 | 26 |
| 200 | 0.41 (0.26) | 0.67 (0.42) | 0.90 (0.56) | 1.21 (0.75) |
| 400 | 0.43 (0.26) | 0.77 (0.48) | 1.09 (0.68) | 1.53 (0.95) |
| 600 | 0.44 (0.27) | 0.80 (0.49) | 1.17 (0.73) | 1.70 (1.06) |
| 800 | 0.44 (0.27) | 0.81 (0.50) | 1.21 (0.75) | 1.80 (1.12) |
| 1000 | 0.44 (0.27) | 0.82 (0.51) | 1.23 (0.76) | 1.86 (1.15) |
| 1200 | 0.45 (0.28) | 0.83 (0.52) | 1.24 (0.77) | 1.91 (1.19) |
| 1400 | 0.45 (0.28) | 0.83 (0.52) | 1.26 (0.78) | 1.94 (1.20) |
| 1600 | 0.45 (0.28) | 0.84 (0.52) | 1.26 (0.78) | 1.96 (1.22) |
| 1800 | 0.45 (0.28) | 0.84 (0.52) | 1.27 (0.78) | 1.98 (1.23) |
| 2000 | 0.46 (0.29) | 0.85 (0.53) | 1.28 (0.79) | 1.99 (1.24) |
| 2200 | 0.46 (0.29) | 0.85 (0.53) | 1.29 (0.80) | 2.01 (1.25) |
| 2400 | 0.47 (0.29) | 0.86 (0.53) | 1.30 (0.81) | 2.02 (1.26) |
| 2600 | 0.47 (0.29) | 0.87 (0.54) | 1.31 (0.81) | 2.04 (1.27) |
| 2800 | 0.48 (0.30) | 0.88 (0.55) | 1.32 (0.82) | 2.07 (1.29) |
| 3000 | 0.49 (0.30) | 0.89 (0.55) | 1.34 (0.83) | 2.10 (1.30) |
| 3200 | 0.50 (0.31) | 0.91 (0.57) | 1.36 (0.84) | 2.13 (1.32) |
| 3400 | 0.52 (0.32) | 0.93 (0.58) | 1.40 (0.87) | 2.19 (1.36) |
| 3600 | 0.54 (0.34) | 0.97 (0.60) | 1.45 (0.90) | 2.26 (1.40) |
| 3800 | 0.57 (0.35) | 1.02 (0.63) | 1.52 (0.94) | 2.36 (1.47) |
| 4000 | 0.62 (0.38) | 1.10 (0.68) | 1.63 (1.01) | 2.53 (1.57) |

NOTE: Between end-section lengths of 2,250 ft (686 m) for D66 loading.

TABLE 5.—FREQUENCY ATTENUATION @ 68 °F (20 °C) H88 LOADED EXCHANGE CABLES 83 NF/ MILE (52 NF/KM) (SEE NOTE)

| Frequency (Hz) | Attenuation dB/mile (dB/km) AWG | | | |
|---|---|---|---|---|
| | 19 | 22 | 24 | 26 |
| 200 | 0.40 (0.25) | 0.66 (0.41) | 0.90 (0.56) | 1.20 (0.75) |

TABLE 5.—FREQUENCY ATTENUATION @ 68 °F (20 °C) H88 LOADED EXCHANGE CABLES 83 nF/ MILE (52 nF/KM) (SEE NOTE)—Continued

| Frequency (Hz) | Attenuation dB/mile (dB/km) AWG | | | |
|---|---|---|---|---|
| | 19 | 22 | 24 | 26 |
| 400 | 0.42 (0.26) | 0.76 (0.47) | 1.08 (0.67) | 1.53 (0.95) |
| 600 | 0.43 (0.27) | 0.79 (0.49) | 1.16 (0.72) | 1.70 (1.06) |
| 800 | 0.43 (0.27) | 0.80 (0.50) | 1.20 (0.75) | 1.80 (1.12) |
| 1000 | 0.43 (0.27) | 0.81 (0.50) | 1.23 (0.76) | 1.86 (1.15) |
| 1200 | 0.44 (0.27) | 0.82 (0.51) | 1.24 (0.77) | 1.91 (1.19) |
| 1400 | 0.44 (0.28) | 0.82 (0.51) | 1.25 (0.78) | 1.94 (1.20) |
| 1600 | 0.44 (0.27) | 0.83 (0.52) | 1.26 (0.78) | 1.97 (1.22) |
| 1800 | 0.45 (0.28) | 0.84 (0.52) | 1.28 (0.79) | 1.99 (1.24) |
| 2000 | 0.46 (0.29) | 0.85 (0.53) | 1.29 (0.80) | 2.02 (1.26) |
| 2200 | 0.47 (0.29) | 0.86 (0.53) | 1.31 (0.81) | 2.06 (1.28) |
| 2400 | 0.48 (0.30) | 0.89 (0.55) | 1.34 (0.83) | 2.10 (1.30) |
| 2600 | 0.50 (0.31) | 0.92 (0.57) | 1.39 (0.86) | 2.18 (1.35) |
| 2800 | 0.53 (0.33) | 0.97 (0.60) | 1.47 (0.91) | 2.29 (1.42) |
| 3000 | 0.59 (0.37) | 1.07 (0.66) | 1.60 (0.99) | 2.48 (1.54) |
| 3200 | 0.71 (0.44) | 1.26 (0.78) | 1.87 (1.16) | 2.86 (1.78) |
| 3400 | 1.14 (0.71) | 1.91 (1.19) | 2.64 (1.64) | 3.71 (2.30) |
| 3600 | 4.07 (2.53) | 4.31 (2.68) | 4.65 (2.90) | 5.30 (3.29) |
| 3800 | 6.49 (4.03) | 6.57 (4.08) | 6.72 (4.18) | 7.06 (4.39) |
| 4000 | 8.22 (5.11) | 8.27 (5.14) | 8.36 (5.19) | 8.58 (5.33) |

NOTE: Between end-section lengths of 3,000 ft (914 m) for H88 loading.

TABLE 6.—FREQUENCY ATTENUATION @ 68 °F (20 °C) NONLOADED EXCHANGE CABLES 83 nF/ MILE (52 nF/KM) AWG

| Frequency (Hz) | Attenuation dB/mile (dB/km) AWG | | | |
|---|---|---|---|---|
| | 19 | 22 | 24 | 26 |
| 200 | 0.58 (0.36) | 0.82 (0.51) | 1.03 (0.64) | 1.30 (0.81) |
| 400 | 0.81 (0.51) | 1.15 (0.71) | 1.45 (0.90) | 1.84 (1.14) |
| 600 | 0.98 (0.61) | 1.41 (0.87) | 1.77 (1.10) | 2.26 (1.40) |
| 800 | 1.13 (0.70) | 1.62 (1.01) | 2.04 (1.27) | 2.60 (1.61) |
| 1000 | 1.25 (0.78) | 1.80 (1.12) | 2.28 (1.42) | 2.90 (1.80) |
| 1200 | 1.36 (0.84) | 1.97 (1.22) | 2.50 (1.55) | 3.17 (1.97) |
| 1400 | 1.46 (0.91) | 2.12 (1.32) | 2.69 (1.67) | 3.42 (2.12) |
| 1600 | 1.55 (0.96) | 2.26 (1.40) | 2.87 (1.78) | 3.65 (2.27) |
| 1800 | 1.63 (1.01) | 2.39 (1.48) | 3.04 (1.89) | 3.87 (2.40) |
| 2000 | 1.71 (1.06) | 2.51 (1.56) | 3.20 (1.99) | 4.08 (2.53) |
| 2200 | 1.78 (1.11) | 2.62 (1.63) | 3.35 (2.08) | 4.27 (2.65) |
| 2400 | 1.85 (1.15) | 2.73 (1.70) | 3.49 (2.17) | 4.45 (2.76) |
| 2600 | 1.91 (1.19) | 2.83 (1.76) | 3.62 (2.25) | 4.63 (2.88) |
| 2800 | 1.97 (1.22) | 2.93 (1.82) | 3.75 (2.33) | 4.80 (2.98) |
| 3000 | 2.03 (1.26) | 3.02 (1.88) | 3.88 (2.41) | 4.96 (3.08) |
| 3200 | 2.08 (1.29) | 3.11 (1.93) | 4.00 (2.48) | 5.12 (3.18) |
| 3400 | 2.13 (1.32) | 3.19 (1.98) | 4.11 (2.55) | 5.27 (3.27) |
| 3600 | 2.18 (1.35) | 3.28 (2.04) | 4.22 (2.62) | 5.41 (3.36) |
| 3800 | 2.22 (1.38) | 3.36 (2.09) | 4.33 (2.69) | 5.55 (3.45) |
| 4000 | 2.27 (1.41) | 3.43 (2.13) | 4.43 (2.75) | 5.69 (3.53) |

(G) For loaded subscriber loops, the 1 kHz loss shall be approximately 0.45 dB per 100 ohms of measured dc loop resistance. This loss shall be the measured loss less the net gain of any voice frequency repeaters in the circuit. Testing shall also be conducted to verify that the loss increases gradually as the frequency increases. The loss on H88 loaded loops should be down only slightly at 2.8 kHz but drop rapidly above 2.8 kHz. The loss on D66 loaded loops shall be fairly constant to about 3.4 kHz and there shall be good response at 4.0 kHz. When voice frequency repeaters are in the circuit there will be some frequency weighting in the build-out network and the loss at the higher frequencies will be greater than for nonrepeatered loops.

(H) For nonloaded subscriber loops, the 1 kHz loss shall be approximately 0.9 dB per 100 ohms of measured dc loop resistance. Testing shall also be conducted to verify that the loss is approximately a straight line function with no abrupt changes. The 3 kHz loss should be approximately 70% higher than the 1 kHz loss.

(ii) *Noise.* The principal objective related to circuit noise (noise-metallic) and the acceptance of new plant is that circuit noise levels be 20 dBrnc or less (decibels above reference noise, C-message weighted (a weighting derived from listening tests, to indicate the relative annoyance or speech impairment by an interfering signal of frequency (f) as heard through a ''500-type'' telephone set)). For most new, properly installed, plant construction, circuit noise will usually be considerably less than 20 dBrnc unless there are unusually long sections of telephone plant in parallel with electric power facilities and/or power influence of paralleling electric facilities is abnormally high. When circuit noise is

20 dBrnc or less, the loop plant shall be considered acceptable. When measured circuit noise is greater than 20 dBrnc, loop plant shall still be considered acceptable providing circuit balance (power influence reading minus circuit noise readings) is 60 dB or greater and power influence readings are 85 dBrnc or greater. When circuit noise is greater than 20 dBrnc and circuit balance is less than 60 dB and/or power influence is less than 85 dBrnc, loop plant shall not be considered acceptable and the loop plant shall be remedied to make circuit balance equal to or greater than 60 dB.

(7) *Data record.* Measurement data shall be recorded. A suggested format similar to Format I for subscriber loops in § 1755.407 or a format specified in the applicable construction contract may be used.

(8) *Probable causes for nonconformance.*—(i) *Insertion loss.* Some of the more common causes for failing to obtain the desired results may be due to reversed load coil windings, missing load coils, bridge taps between load coils, load coil spacing irregularities, excessive end sections, cables having high or low mutual capacitance, load coils having the wrong inductance, load coils inadvertently installed in nonloaded loops, moisture or water in cable, split pairs, and improperly spliced connections. The above factors can occur singularly or in combination. Experience to date indicates that the most common problems are missing load coils, reversed load coil windings or bridge taps.

(ii) *Noise.* Some of the common causes for failing to obtain the desired results may be due to high power influence from paralleling electrical power systems, poor telephone circuit balance, discontinuous cable shields, inadequate bonding and grounding of cable shields, high capacitance unbalance-to-ground of the cable pairs, high dc loop resistance unbalance, dc loop current less than 20 milliamperes, etc. The above factors can occur singularly or in combination. See TE&CM Section 451, Telephone Noise Measurement and Mitigation, for steps to be taken in reducing telecommunications line noise.

(f) *One-person open circuit measurement (subscriber loops).* (1) When specified by the borrower, open circuit measurements shall be made on all loaded and nonloaded subscriber loops upon completion of the cable work to verify that the plant is free from major impedance irregularities.

(2) For loaded loops, open circuit measurements shall be made using one of the following methods:

(i) Impedance or pulse return pattern, with cable pair trace compared to that of an artificial line of the same length and gauge. For best results, a level tracer or fault locator with dual trace capability is required;

(ii) Return loss using a level tracer, with cable pair compared to an artificial line of the same length and gauge connected in lieu of a Precision Balance Network (PBN). This method can be made with level tracers having only single trace capability; or

(iii) Open circuit structural return loss using a level tracer. This method can be made with level tracer having only single trace capability.

(3) Of the three methods suggested for loaded loops, the method specified in paragraph (f)(2)(ii) of this section is the preferred method because it can yield both qualitative and quantitative results. The methods specified in paragraphs (f)(2)(i) and (f)(2)(iii) of this section can be used as trouble shooting tools should irregularities be found during testing.

(4) For nonloaded loops, open circuit measurements shall be made using the method specified in paragraph (f)(2)(i) of this section.

(5) *Method of measurement.* Open circuit measurements shall be made at the CO on each loaded and nonloaded pair across the tip and ring terminals of the pair under test. All CO equipment shall be disconnected at the MDF for this test. For loaded loops containing voice frequency repeaters installed in the CO or field mounted, the open circuit measurement shall be made after the repeaters have been disconnected. Where field mounted repeaters are used, the open circuit measurement shall be made at the repeater location in both directions.

(i) *Impedance or pulse return pattern.* The step-by-step measurement procedure using the impedance or pulse return pattern for loaded and nonloaded loops shall be as shown in Figure 8. An artificial line of the same makeup as the cable to be tested shall be set up. The traces of the impedance or pulse return pattern from the cable pair and the artificial line shall be compared and should be essentially identical. If the impedance or pulse return traces from the cable pair are different than the artificial line trace, cable faults are possible. When the cable pair trace indicates possible defects, the defects should be identified and located. One method of identifying and locating defects involves introducing faults into the artificial line until its trace is identical with the cable trace.

(ii) *Return loss balanced to artificial line.* The step-by-step measurement procedure using the return loss balanced to artificial line for loaded loops shall be as shown in Figure 9. An artificial line of the same makeup as the cable to be tested shall be set up. The artificial line is connected to the external network terminals of the test set. The cable pair under test is compared to this standard. When defects are found, they should be identified and located by introducing faults into the artificial line. This is more difficult than with the method referenced in paragraph (f)(5)(i) of this section since this measurement is more sensitive to minor faults and only a single trace is used.

(iii) *Open circuit structural return loss using level tracer.* The step-by-step measurement procedure using the level tracer for loaded loops shall be as shown in Figure 10. The cable pair is compared to a PBN.

(6) *Test equipment.* Equipment for performing these tests is shown in Figures 8 through 10. For loaded loops, artificial loaded lines must be of the same gauge and loading scheme as the line under test. For nonloaded loops, artificial nonloaded lines must be of the same gauge as the line under test. Artificial lines should be arranged using switches or other quick connect arrangements to speed testing and troubleshooting. Figures 8 through 10 are as follows:

BILLING CODE 3410–15–P

# FIGURE 8

## ONE-PERSON OPEN CIRCUIT MEASUREMENT IMPEDANCE OR PULSE RETURN PATTERN

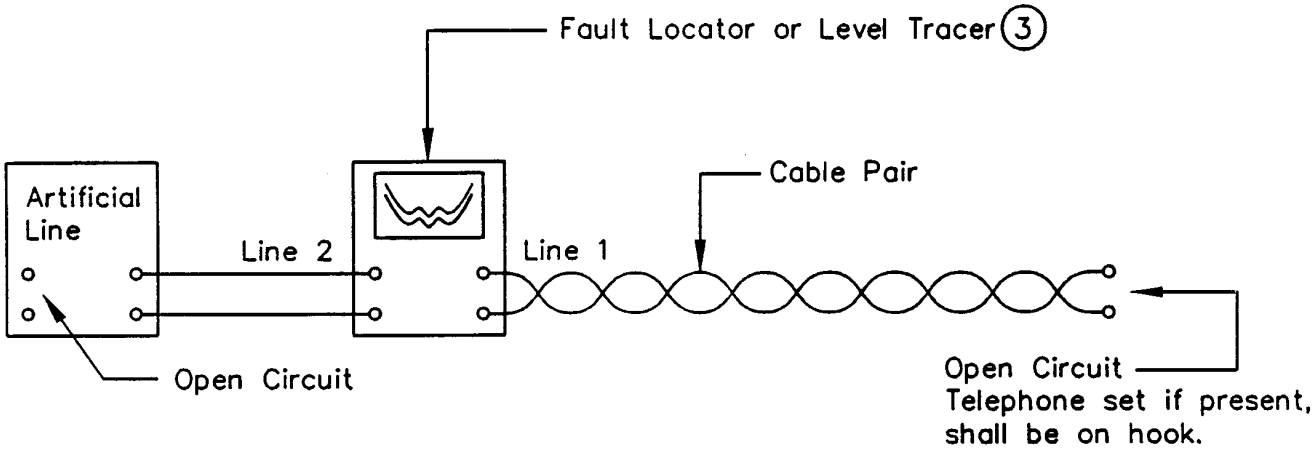


Measurement Procedure

1. Set up Artificial Line to same make-up [Length & Gauge(s)] as the cable pair.
2. Connect to test set (See Note (1)).
3. Connect cable pair to test set (See Note (1)).
4. Compare traces of Artificial Line and cable pair (2). They should be essentially identical. Differences indicate cable faults.
5. Location and type of fault may be determined by introducing faults in the Artificial Line until its trace is identical to that of the cable pair.

Notes:

(1.) Terminals to which cable pair and artificial line are attached shall be determined from the manufacturer's operating instructions. Proper settings for various switches and adjustments on the test set shall also be determined from the same source.

(2.) With test sets having trace storage capability only one set of terminals need be used. Connect Artificial Line to test set, store trace and disconnect line. Connect cable pair and compare trace to stored trace. To identify fault, store cable pair trace and connect Artificial Line. Introduce faults in the Artificial Line until traces are identical.

(3.) N.E.C.-17A, Biddle-CME110A-1, Dolcom-490, Tektronix-1503, Wilcom-T195, Wilcom-T132, or equivalent.

# FIGURE 9

## ONE-PERSON OPEN CIRCUIT MEASUREMENT RETURN LOSS BALANCED TO ARTIFICIAL LINE

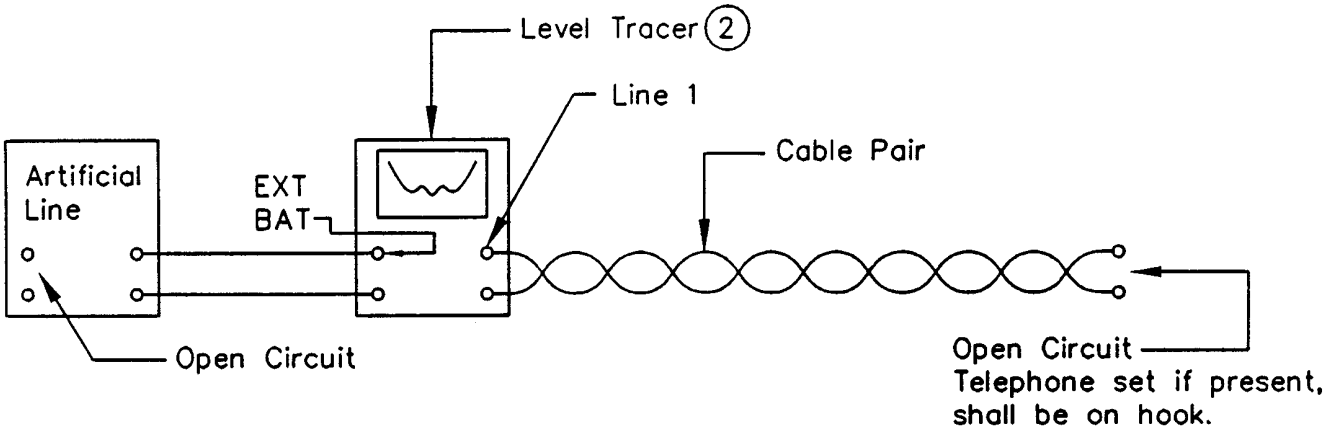


Measurement Procedure

1. Connect the test equipment and cable pair under test as shown above (See Note 1 ). Set up Artificial Line to same make-up [Length & Gauge(s)] as the cable pair.

2. Observe Return Loss from 200 to 3500 Hz (D66) or 200 to 3000 Hz (H88) noting maximum and minimum values. Note the value and frequency of the poorest (Lowest Numerical Value) SRL. (SRL becomes better as the readings become more negative). Record this value and frequency.

Notes:

(1.) Terminals to which cable pair and Artificial Line are attached shall be determined from the manufacturer's operating instructions. Proper settings for various switches and adjustments on the test set shall also be determined from the same source.

(2.) Wilcom-T132, Wilcom-T195, or equivalent.

# FIGURE 10

## ONE-PERSON OPEN CIRCUIT MEASUREMENT STRUCTURAL RETURN LOSS USING LEVEL TRACER

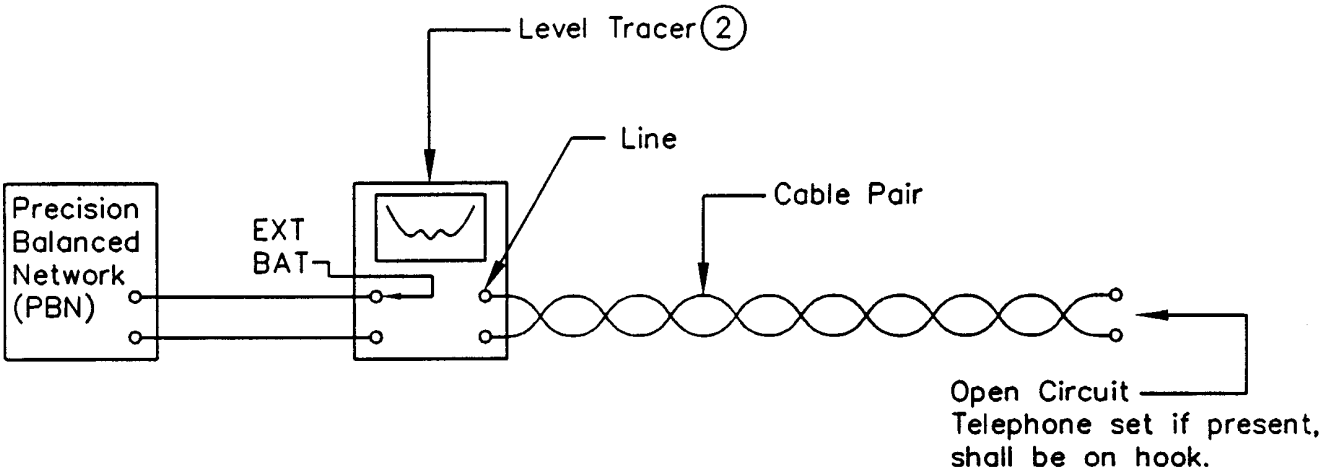


Measurement Procedure

1. Connect the test equipment and cable pair under test as shown above (See Note (1)). Set gauge of PBN for: Single Gauge – Same gauge as cable being measured; Mixed Gauge – Most predominant gauge adjacent to test set.

2. Observe Return Loss between 1000 and 3500 Hz (D66) or 1000 and 3000 Hz (H88) observing maximum and minimum values. Note the value and frequency of the poorest (Lowest Numerical Value) SRL. Single Gauge: Record this value. Mixed Gauge: Change gauge of PBN and note if SRL becomes better. (SRL becomes better as readings become more negative). If it does, record this value and frequency; if not, record value obtained with original gauge setting. (Varying gauge will be necessary, depending on actual cable layout, to obtain best SRL).

Notes:

(1.) Terminals to which cable pair and Artificial Line are attached shall be determined from the manufacturer's operating instructions. Proper settings for various switches and adjustments on the test set shall also be determined from the same source.

(2.) Wilcom–T132, Wilcom–T195, or equivalent.

BILLING CODE 3410–15–C

(7) *Applicable results.* (i) For loaded and nonloaded loops, the two traces in the pulse return pattern or impedance method (paragraph (f)(5)(i) of this section) shall be essentially identical. The degree of comparison required of the two traces is to be determined by experience.

(ii) For loaded loops, results for return loss measurements using a level tracer, with artificial line, in lieu of a PBN (paragraph (f)(5)(ii) of this section) shall meet the following requirements:

(A) For D66 and H88 loaded cables the structural return loss (SRL) values shall range between 28 and 39 dB, respectively, at the critical frequency of structural return loss (CFSRL) within the pass band of the loading system being used. The minimum SRL value for uniform gauge shall be 25 dB CFSRL. These SRL values apply for loaded cables of uniform gauge for the entire length of the subscriber loop circuit. Subscriber loop circuits shall meet the loading spacing deviations and the cable mutual capacitance requirements in the applicable RUS cable specifications;

(B) For mixed gauge loaded cables the SRL values shall be 25 and 27 dB CFSRL, respectively, and the minimum SRL value shall be 22 dB CFSRL; and

(C) The two traces in the pulse return pattern should be essentially identical. The degree of comparison required of the two traces is determined by experience.

(iii) For loaded loops, the results of open circuit structural return loss measurements using a level tracer (paragraph (f)(5)(iii) of this section) shall meet the following requirements. For D66 and H88 loaded cables with uniform or mixed gauges, the worst value allowed for measured open circuit structural return loss between 1,000–3,500 Hz and 1,000–3,000 Hz, respectively, shall be approximately 0.9 dB (round trip) for each 100 ohms outside plant dc loop resistance including the resistance of the load coils. The value of 0.9 dB per 100 ohms for the round trip loss remains reasonably accurate as long as:

(A) The subscriber end section of the loaded pair under test is approximately 2,250 ft (685 m) for D66 loading or 3,000 ft (914 m) for H88 loading in length; and

(B) The one-way 1,000 Hz loss does not exceed 10 dB.

(iv) For loaded loops, the measured value of open circuit structural return loss can only be as accurate as the degree to which the dc loop resistance of the loaded pair under test is known. Most accurate results shall be obtained when the dc loop resistance is known by actual measurements as described in paragraph (d) of this section. Furthermore, where the dc loop resistance is measured at the same time as the open circuit structural return loss, no correction for temperature is needed because the loss is directly proportional to the loop resistance. Where it is not practical to measure the dc loop resistance, it shall be calculated and corrected for temperature as specified in paragraph (d)(6)(ii) of this section. When measuring existing plant, care shall be taken to verify the accuracy of the records, if they are used for the calculation of the dc loop resistance. For buried plant, the temperature correction shall be based at the normal depth of the cable in the ground. (Temperature can be measured by boring a hole to cable depth with a ground rod, placing a thermometer in the ground at the cable depth, and taking and averaging several readings during the course of the resistance measurements.) For aerial cable it shall be based on the temperature inside the cable sheath.

(v) For loaded loops, the best correlation between the measured and the expected results shall be obtained when the cable is of one gauge, one size, and the far end section is approximately 2,250 ft (685 m) for D66 loading or 3,000 ft (914 m) for H88 loading. Mixing gauges and cable sizes will result in undesirable small reflections whose frequency characteristics and magnitude cannot be accurately predicted. In subscriber loop applications, cable gauge may be somewhat uniform but the cable pair size most likely will not be uniform as cable pair sizes taper off toward the customer access location and a downward adjustment of 1 dB of the allowed value shall be acceptable. ''Long'' end sections (as defined in TE&CM Section 424, ''Guideline for Telecommunications Subscriber Loop Plant'') lower the expected value, a further downward adjustment of 3 dB in the allowed value shall be acceptable.

(vi) For loaded loops, the limiting factor when making open circuit structural return loss measurements is when the 1,000 Hz one-way loss of the loaded cable pair under test becomes 10 dB or greater; it becomes difficult to detect the presence of irregularities beyond the 10 dB point on the loop. To overcome this difficulty, loaded loops having a one-way loss at 1,000 Hz greater than 10 dB shall be opened at some convenient point (such as a pedestal or ready access enclosure) and loss measurements at the individual portions measuring less than 10 dB one-way shall be made separately. When field mounted voice frequency repeaters are used, the measurement shall be made at the repeater location in both directions.

(8) *Data record*. (i) When performing a pulse return pattern or impedance open circuit measurement on loaded and nonloaded loops, a ''check mark'' indicating that the pair tests good or an ''X'' indicating that the pair does not test good shall be recorded in the SRL column. A suggested format similar to Format I for subscriber loops in § 1755.407 or a format specified in the applicable construction contract may be used.

(ii) When performing open circuit return loss measurements using the return loss balanced to an artificial line or return loss using a level tracer on loaded loops, the value of the poorest (lowest numerical value) SRL and its frequency in the proper column between 1,000 and 3,500 Hz for D66 loading or between 1,000 and 3,000 Hz for H88 loading shall be recorded. A suggested format similar to Format I for subscriber loops in § 1755.407 or a format specified in the applicable construction contract may be used.

(9) *Probable causes for nonconformance.* Some of the more common causes for failing to obtain the desired results may be due to reversed load coil windings, missing load coils, bridge taps between load coils, load coil spacing irregularities, excessive end sections, cables having high or low mutual capacitance, load coils inadvertently installed in nonloaded loops, moisture or water in the cable, load coils having the wrong inductance, split pairs, and improperly spliced connectors. The above can occur singularly or in combination. Experience to date indicates that the most common problems are missing load coils, reversed load coil windings or bridge taps.

(g) *Cable insertion loss measurement (carrier frequencies).* (1) When specified by the borrower, carrier frequency insertion loss measurements shall be made on cable pairs used for T1, T1C, and/or station carrier systems. Carrier frequency insertion loss shall be made on a minimum of three pairs. Select at least one pair near the outside of the core unit layup. If the three measured pairs are within 10% of the calculated loss in dB corrected for temperature, no further testing is necessary. If any of the measured pairs of a section are not within 10% of the calculated loss in dB, all pairs in that section used for carrier transmission shall be measured.

(2) *Method of measurement.* The step-by-step method of measurement shall be as shown in Figure 11.

(3) *Test equipment.* The test equipment is shown in Figure 11 as follows:

BILLING CODE 3410–15–P

# FIGURE 11

## CARRIER FREQUENCY INSERTION LOSS MEASUREMENT CABLE FACILITIES

Measurement

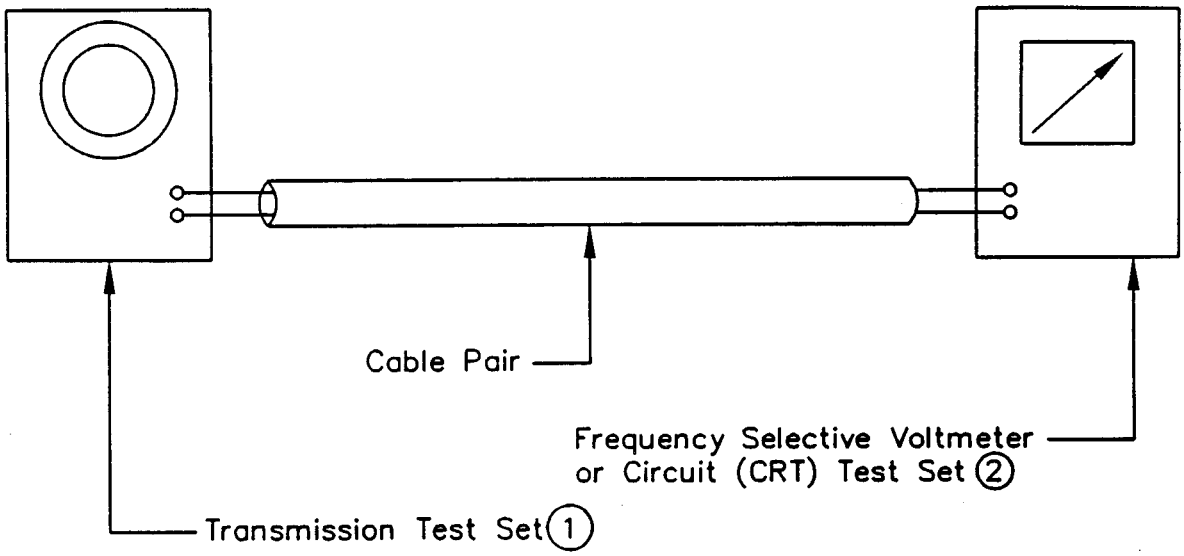


Measurement Procedure

1. Connect the transmission test set to one end of the length of cable to be measured and either the frequency selective voltmeter (FSVM) or CRT test set to the other end as shown.
2. Record the Insertion Loss in dB of the cable at each specified frequency.
3. The measured Insertion Loss of the cable should be within ± 10 percent of the calculated loss in dB when the loss is corrected for temperature.
4. Transmission test sets having an impedance between 100 and 135 ohms on the cable side are acceptable.

Notes:

1. H.P.–204B, H.P.–204C, H.P.–355, Siemens–W2057, or equivalent.
2. Wilcom–T136, Wilcom–T336, Wilcom–T337, Wilcom–T132B, Siemens–D2057, or equivalent.

BILLING CODE 3410–15–C

(4) *Applicable results.* (i) The highest frequency to be measured is determined by the type of carrier system. For T1 type carrier, the highest frequency is normally 772 kHz. For T1C type carrier, the highest frequency is normally 1576 kHz. The highest frequency to be measured for station carrier is 140 kHz.

(ii) The measured insertion loss of the cable shall be within ±10% of the calculated loss in dB when the loss is corrected for temperature.

(iii) The calculated insertion loss is computed as follows:

(A) Multiply the length of each different gauge by the applicable dB per unit length as shown in Table 7 or 8 as follows:

TABLE 7.—CABLE ATTENUATION @ 68 °F (20 °C) FILLED CABLES—SOLID INSULATION

| Frequency (kHz) | Attenuation dB/mile (dB/km) Gauge (AWG) | | | |
|---|---|---|---|---|
| | 19 | 22 | 24 | 26 |
| 10 | 2.8 (1.7) | 4.8 (2.9) | 6.4 (3.9) | 8.5 (5.3) |
| 20 | 3.2 (2.0) | 5.8 (3.6) | 8.2 (5.1) | 11.2 (6.9) |
| 40 | 3.6 (2.2) | 6.5 (4.0) | 9.6 (6.0) | 13.9 (8.6) |
| 60 | 4.0 (2.5) | 6.9 (4.2) | 10.3 (6.4) | 15.2 (9.4) |
| 80 | 4.5 (2.8) | 7.3 (4.5) | 10.7 (6.6) | 16.0 (9.9) |
| 100 | 4.9 (3.0) | 7.7 (4.7) | 11.1 (6.8) | 16.5 (10.2) |
| 112 | 5.2 (3.2) | 8.0 (4.9) | 11.3 (7.0) | 16.8 (10.5) |
| 120 | 5.4 (3.3) | 8.1 (5.0) | 11.5 (7.1) | 17.0 (10.6) |
| 140 | 5.8 (3.6) | 8.6 (5.3) | 11.9 (7.4) | 17.4 (10.8) |
| 160 | 6.2 (3.8) | 9.0 (5.6) | 12.3 (7.6) | 17.8 (11.1) |
| 180 | 6.6 (4.1) | 9.5 (5.9) | 12.7 (7.9) | 18.2 (11.3) |
| 200 | 7.0 (4.3) | 10.0 (6.2) | 13.2 (8.2) | 18.6 (11.5) |
| 300 | 8.7 (5.4) | 12.2 (7.5) | 15.4 (9.6) | 20.6 (12.8) |
| 400 | 10.0 (6.2) | 14.1 (8.8) | 17.7 (11.0) | 22.9 (14.2) |
| 500 | 11.2 (6.9) | 15.9 (9.8) | 19.8 (12.3) | 25.2 (15.6) |
| 600 | 12.2 (7.5) | 17.5 (10.9) | 21.8 (13.6) | 27.4 (17.0) |
| 700 | 13.2 (8.2) | 19.0 (11.8) | 23.6 (14.7) | 29.6 (18.4) |
| 772 | 13.8 (8.5) | 19.9 (12.4) | 24.8 (15.4) | 31.4 (19.5) |
| 800 | 14.2 (8.8) | 20.1 (12.5) | 27.4 (17.1) | 31.7 (19.7) |
| 900 | 14.8 (9.2) | 21.6 (13.4) | 29.0 (18.0) | 33.8 (21.0) |
| 1000 | 15.8 (9.8) | 22.7 (14.1) | 31.1 (19.3) | 35.9 (22.3) |
| 1100 | 16.4 (10.2) | 23.8 (14.8) | 32.7 (20.3) | 38.0 (23.6) |
| 1200 | 17.4 (10.8) | 24.8 (15.4) | 34.3 (21.3) | 40.0 (24.9) |
| 1300 | 17.9 (11.1) | 25.9 (16.1) | 35.4 (22.0) | 41.7 (25.9) |
| 1400 | 19.0 (11.8) | 26.9 (16.7) | 37.0 (23.0) | 43.3 (26.9) |
| 1500 | 19.5 (12.1) | 28.0 (17.4) | 38.0 (23.6) | 44.3 (27.6) |
| 1576 | 20.1 (12.4) | 29.0 (18.0) | 39.0 (24.3) | 44.4 (28.2) |

TABLE 8.—CABLE ATTENUATION @ 68 °F (20 °C) FILLED CABLES—EXPANDED INSULATION

| Frequency (kHz) | Attenuation dB/mile (dB/km) Gauge (AWG) | | | |
|---|---|---|---|---|
| | 19 | 22 | 24 | 26 |
| 10 | 3.0 (1.8) | 4.9 (3.0) | 6.5 (4.0) | 8.6 (5.3) |
| 20 | 3.5 (2.1) | 6.0 (4.1) | 8.5 (5.2) | 11.5 (7.1) |
| 40 | 4.0 (2.5) | 7.0 (4.3) | 10.2 (6.3) | 14.4 (8.9) |
| 60 | 4.5 (2.8) | 7.5 (4.6) | 11.1 (6.8) | 16.0 (9.9) |
| 80 | 5.2 (3.3) | 7.9 (4.9) | 11.3 (6.9) | 16.2 (10.1) |
| 100 | 5.8 (3.6) | 8.4 (5.2) | 11.6 (7.2) | 16.4 (10.2) |
| 112 | 6.0 (3.8) | 8.8 (5.4) | 11.9 (7.4) | 16.6 (10.3) |
| 120 | 6.2 (3.9) | 9.0 (5.6) | 12.1 (7.5) | 16.9 (10.5) |
| 140 | 6.6 (4.1) | 9.5 (5.9) | 12.7 (7.9) | 17.2 (10.7) |
| 160 | 6.9 (4.3) | 10.0 (6.2) | 13.2 (8.2) | 17.4 (10.8) |
| 180 | 7.4 (4.6) | 10.6 (6.6) | 13.7 (8.5) | 17.9 (11.1) |
| 200 | 7.9 (4.9) | 11.1 (6.9) | 14.2 (8.8) | 18.5 (11.5) |
| 300 | 9.5 (5.9) | 13.2 (8.2) | 16.8 (10.5) | 21.6 (13.4) |
| 400 | 11.1 (6.9) | 15.3 (9.5) | 19.5 (12.1) | 24.3 (15.1) |
| 500 | 12.1 (7.5) | 17.9 (11.1) | 22.2 (13.8) | 27.4 (17.1) |
| 600 | 13.7 (8.5) | 19.5 (12.1) | 24.3 (15.1) | 29.6 (18.4) |
| 700 | 14.8 (9.2) | 21.1 (13.1) | 26.4 (16.4) | 32.2 (20.0) |
| 772 | 15.3 (9.5) | 21.6 (13.4) | 27.4 (17.1) | 33.8 (21.90) |
| 800 | 15.8 (9.8) | 22.2 (13.8) | 28.0 (17.4) | 34.4 (21.3) |
| 900 | 17.0 (10.5) | 23.8 (14.8) | 29.6 (18.4) | 36.4 (22.6) |
| 1000 | 17.4 (10.8) | 24.8 (15.4) | 31.1 (19.3) | 38.5 (23.9) |
| 1100 | 17.9 (11.1) | 26.4 (16.4) | 33.3 (20.7) | 40.6 (25.3) |
| 1200 | 19.0 (11.8) | 27.4 (17.1 | 34.3 (21.3) | 42.2 (26.2) |
| 1300 | 19.5 (12.1) | 28.5 (17.7) | 35.9 (22.3) | 43.8 (27.2) |
| 1400 | 20.1 (12.5 | 29.6 (18.4) | 37.0 (23.0) | 45.9 (28.5) |
| 1500 | 20.6 (12.8) | 30.6 (19.0) | 38.5 (23.9) | 47.5 (29.5) |
| 1576 | 21.6 (13.4) | 31.1 (19.3) | 39.1 (24.3) | 48.6 (30.2) |

(B) Add the individual losses for each gauge to give the total calculated insertion loss at a temperature of 68°F (20°C);

(C) Correct the total calculated insertion loss at the temperature of 68°F (20°C) to the measurement temperature by the following formulae:

$A_t = A_{68} \times [1 + 0.0012 \times (t - 68)]$ for English Units

$A_t = A_{20} \times [1 + 0.0022 \times (t - 20)]$ for Metric Units

Where:

$A_t$ = Insertion loss at the measurement temperature in dB.

$A_{68}$ = Insertion loss at a temperature of 68°F in dB.

$A_{20}$ = Insertion loss at a temperature of 20°C in dB.

t = Measurement temperature in °F or (°C); and

(D) Compare the calculated insertion loss at the measurement temperature to the measured insertion loss to determine compliance with the requirement specified in paragraph (g)(4)(ii) of this section. (**Note:** Attenuation varies directly with temperature. For each ±10°F (5.6°C) change in temperature increase or decrease the attenuation by ±1%.)

(iv) If the measured value exceeds the ±10% allowable variation, the cause shall be determined and corrective action shall be taken to remedy the problem.

(5) *Data record*. Results of carrier frequency insertion loss measurements for station, T1, and/or T1C type carrier shall be recorded. Suggested formats similar to Format III, Outside Plant Acceptance Tests—T1 or T1C Carrier Pairs, and Format IV, Outside Plant Acceptance Tests—Station Carrier Pairs, in § 1755.407 or formats specified in the applicable construction contract may be used.

(6) *Probable causes for nonconformance*. If the measured loss is low, the cable records are likely to be in error. If the measured loss is high, there may be bridge taps, load coils or voice frequency build-out capacitors connected to the cable pairs or the cable records may be in error. Figures 12 and 13 are examples that show the effects of bridge taps and load coils in the carrier path. Figures 12 and 13 are as follows:

BILLING CODE 3410–15–P

FIGURE 12

EFFECTS OF BRIDGE TAPS ON ATTENUATION

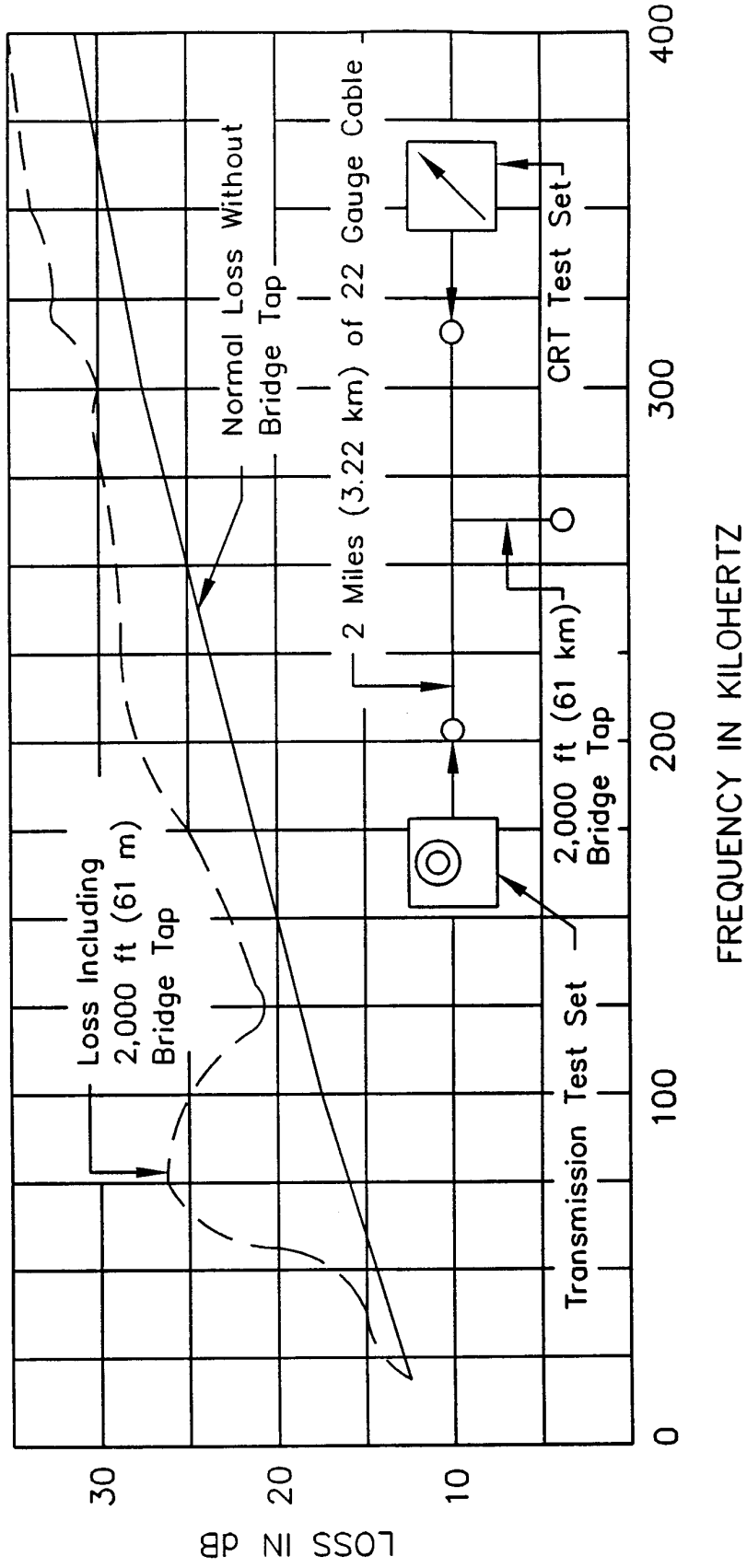

FIGURE 13

EFFECTS OF LOADING COILS ON ATTENUATION

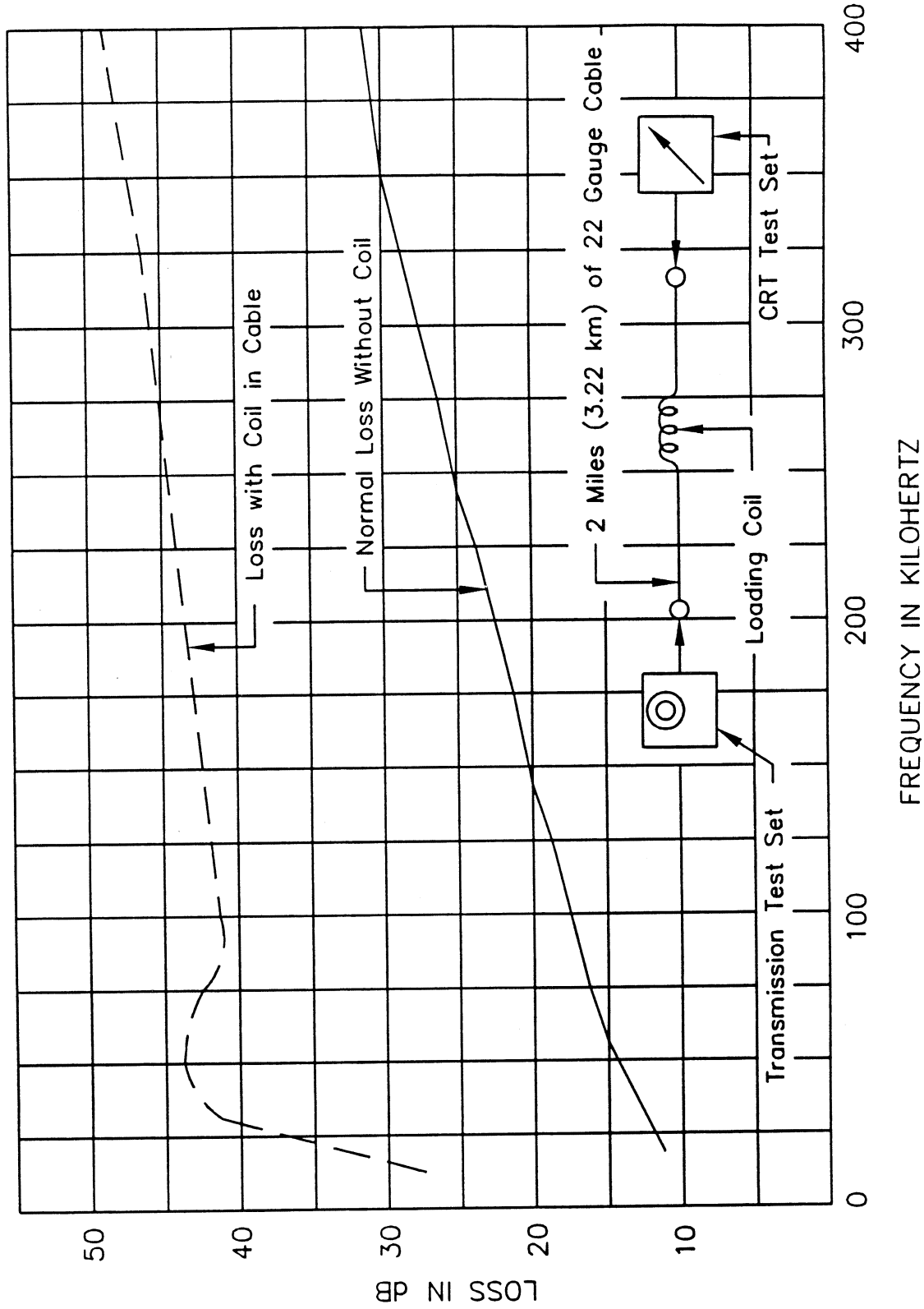


BILLING CODE 3410–15–C

**§ 1755.404 Fiber optic cable telecommunications plant measurements.**

(a) *Armor continuity.* (1) Tests and measurements shall be made to ensure that the armor of fiber optic cables is continuous. There are two areas of concern. The first is armor bonding within a splice and the second is armor continuity between splices.

(2) Measurement techniques outlined here for verification of armor continuity are applicable to buried fiber optic cable plant. Measurements of armor continuity between splices in aerial, armored, fiber optic cable should be made prior to completion of splicing. Conclusive results cannot be obtained on aerial plant after all bonds have been completed to the supporting strand, multigrounded neutral, etc.

(3) *Method of measurement.* Armor continuity within splices shall be measured with a cable shield splice continuity test set. The step-by-step measurement procedure outlined in the manufacturer's operating instructions for the specific test equipment being used shall be followed.

(4) *Test equipment.* A cable shield splice continuity tester shall be used to measure armor continuity within splices.

(5) *Applicable results.* When utilizing shield continuity testers to measure armor continuity within splices, refer to the manufacturer's published information covering the specific test equipment to be used and for anticipated results.

(6) *Data record.* Measurement data from armor continuity tests shall be recorded together with anticipated values in an appropriate format to permit comparison. The recorded data shall include specific location, cable size, and cable type, if known, etc.

(7) *Probable causes for nonconformance.* Among probable causes for nonconformance are broken or damaged armors, bad bonding harnesses, poorly connected bonding clamps, loose bonding lugs, etc.

(b) *Fiber optic splice loss measurement.* (1) After placement of all fiber optic cable plant has been completed and spliced together to form a continuous optical link between end termination points, splice loss measurements shall be performed on all field and central office splice points.

(2) *Method of measurement.* (i) Field splice loss measurements shall be made between the end termination points at 1310 and/or 1550 nanometers for single mode fibers and in accordance with Figure 14. Two splice loss measurements shall be made between the end termination points. The first measurement shall be from termination point A to termination point B. The second measurement shall be from termination point B to termination point A.

(ii) CO splice loss measurements shall be made at 1310 and/or 1550 nanometers for single mode fibers and in accordance with Figure 15. Two splice loss measurements shall be made between the end termination points. The first measurement shall be from termination point A to termination point B. The second measurement shall be from termination point B to termination point A.

(3) *Test equipment.* The test equipment is shown in Figures 14 and 15. The optical time domain reflectometer (OTDR) used for the testing should have dual wave length capability. Figures 14 and 15 are as follows:

BILLING CODE 3410–15–P

FIGURE 14

FIBER OPTIC FIELD SPLICE LOSS MEASUREMENT

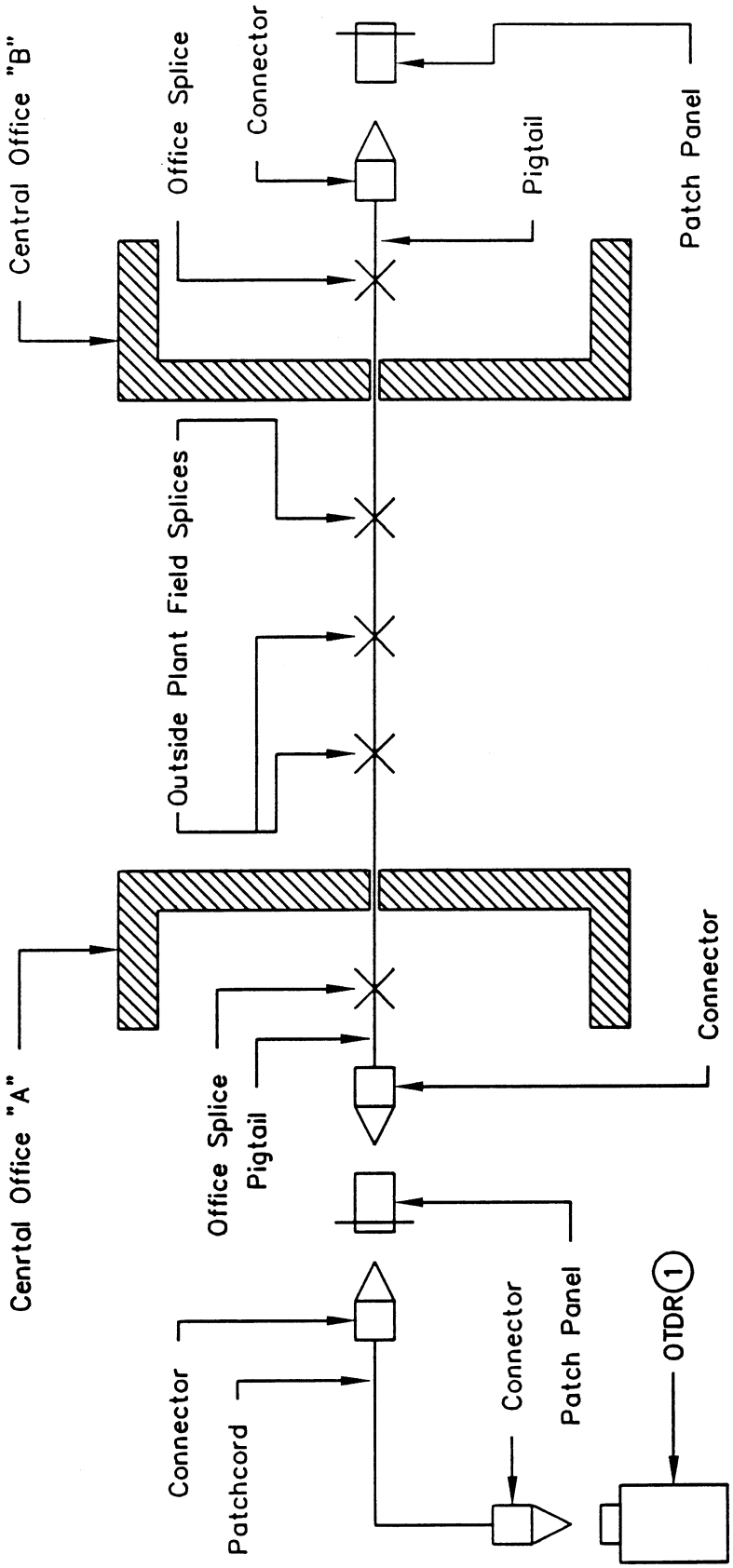


Note:

(1.) Tektronix–TFP2, H.P.–8146A, Opto–Electronics–DFM10, Photo Kinetics–6000, or equivalent.

FIGURE 15

FIBER OPTIC CENTRAL OFFICE SPLICE LOSS MEASUREMENT

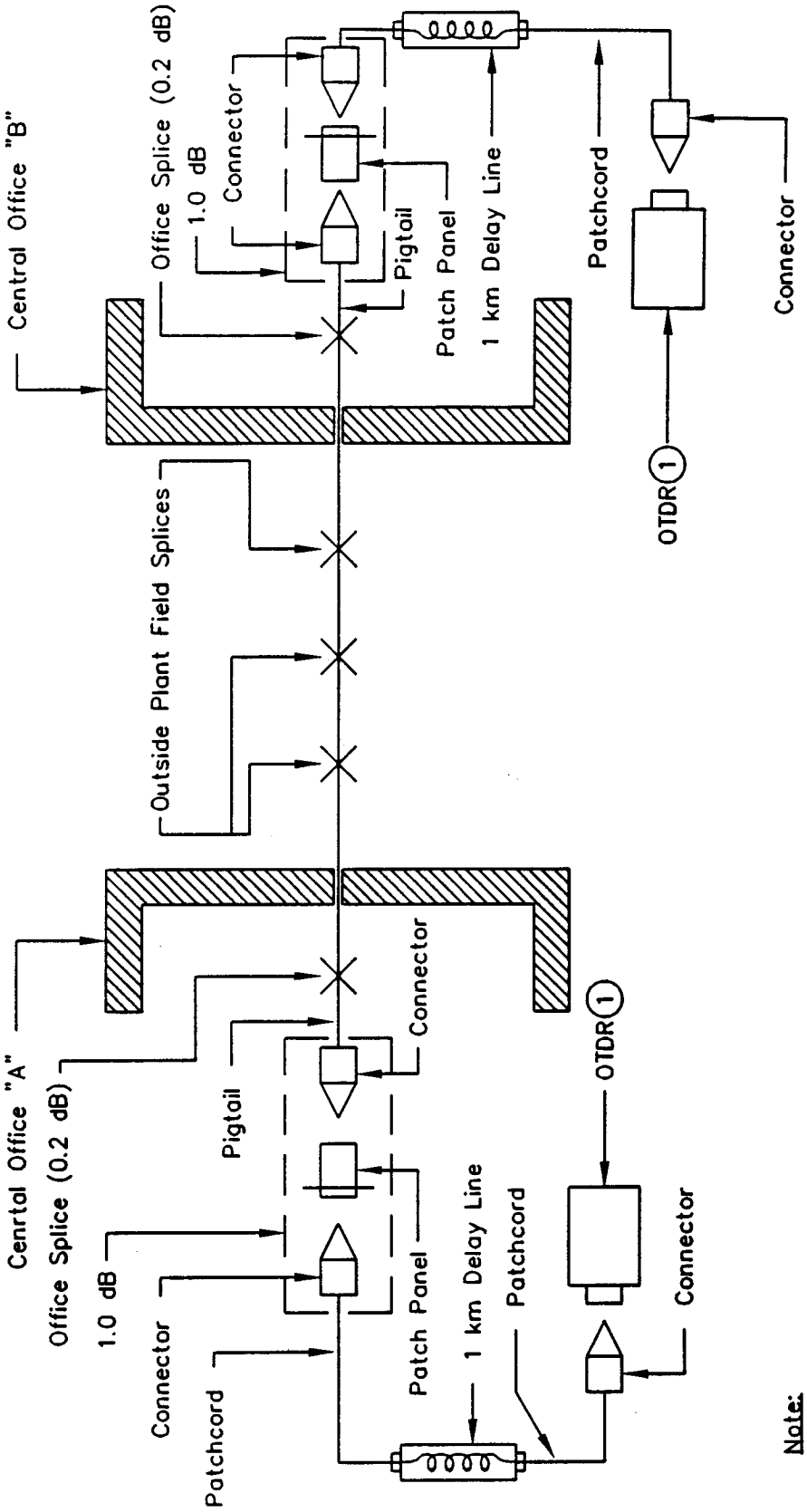


**Note:**

(1.) Tektronix–TFP2, H.P.–8146A, Opto–Electonics–DFM10, Photo Kinetics–6000, or equivalent.

BILLING CODE 3410–15–C

(4) *Applicable results.* (i) The splice loss for each single mode field splice shall be the bi-directional average of the two OTDR readings. To calculate the actual splice loss, substitute the OTDR readings maintaining the sign of the loss (+) or apparent gain (−) into the following equation:

FIGURE 16

END-TO-END FIBER OPTIC ATTENUATION MEASUREMENT SHOWING MEASUREMENT IN ONE DIRECTION ONLY (2)

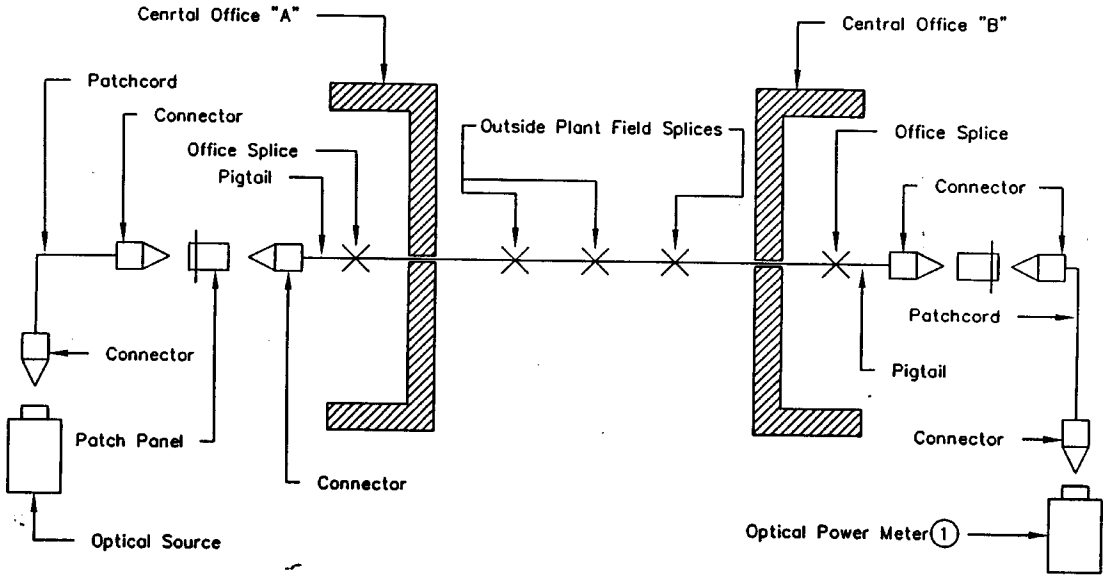


Notes:

(1) H.P.-8153A, Tektronix-OCP5002, Telecommunications Techniques Corp.-131, or equivalent.

(2) Measurement is repeated by reversing location of the optical source and optical power meter in the respective central offices.

(ii) When specified in the applicable construction contract, the splice loss of each field splice at 1310 and/or 1550 nanometers shall not exceed the limit specified in the contract.

(iii) When no limit is specified in the applicable construction contract, the splice loss of each field splice shall not exceed 0.2 dB at 1310 and/or 1550 nanometers.

(iv) The splice loss for each single mode CO splice shall be the bi-directional average of the two OTDR reading. To calculate actual splice loss, substitute the OTDR reading, maintaining the sign of the loss (+) or apparent gain (−), into the equation specified in paragraph (b)(4)(i) of this section.

(v) When specified in the applicable construction contract, the splice loss of each central office splice at 1310 and/or 1550 nanometers shall not exceed the limit specified in the contract.

(vi) When no limit is specified in the applicable construction contract, the splice loss of each central office splice shall not exceed 1.2 dB at 1310 and/or 1550 nanometers.

(5) *Data record.* The measurement data shall be recorded. A suggested format similar to Format V, Outside Plant Acceptance Test—Fiber Optic Telecommunications Plant, in § 1755.407 or a format specified in the applicable construction contract may be used.

(6) *Probable causes for nonconformance.* When the results of the splice loss measurements exceed the specified limits the following factors should be checked:

(i) Proper end preparation of the fibers;

(ii) End separation between the fiber ends;

(iii) Lateral misalignment of fiber cores;

(iv) Angular misalignment of fiber cores;

(v) Fresnel reflection;

(vi) Contamination between fiber ends;

(vii) Core deformation; or

(viii) Mode-field diameter mismatch.

(c) *End-to-end attenuation measurement.* (1) After placement of all fiber optic cable plant has been completed and spliced together to form a continuous optical link between end termination points, end-to-end attenuation measurements shall be performed on each optical fiber within the cable.

(2) *Method of measurement.* For single mode fibers, the end-to-end attenuation measurements of each optical fiber at 1310 and/or 1550 nanometers in each direction between end termination points shall be performed in accordance with Figure 16.

(3) *Test equipment.* The test equipment is shown in Figure 16 as follows:

BILLING CODE 3410–15–P

FIGURE 16

END–TO–END FIBER OPTIC ATTENUATION MEASUREMENT SHOWING MEASUREMENT IN ONE DIRECTION ONLY (2)

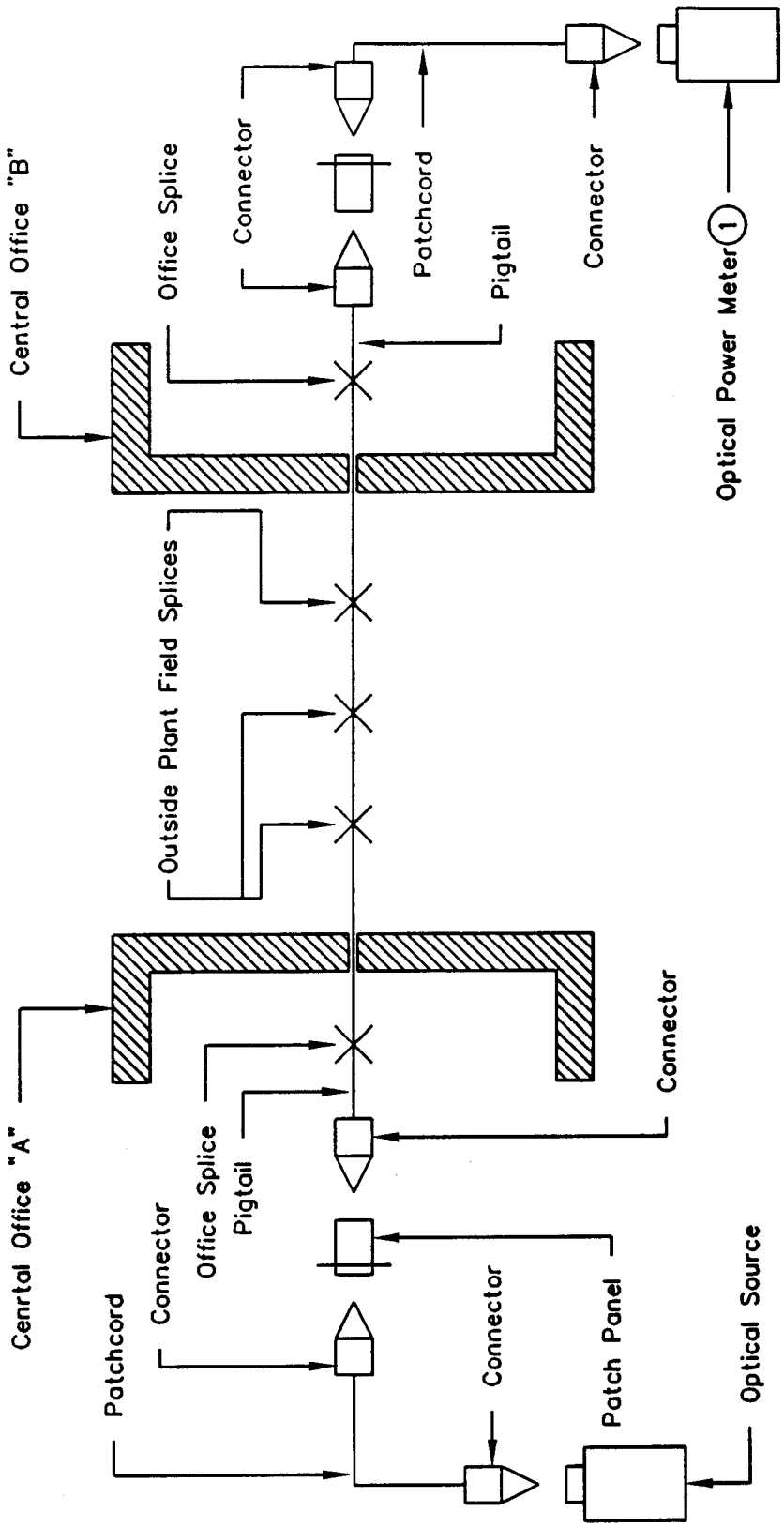


Notes:

(1) H.P.–8153A, Tektronix–OCP5002, Telecommunications Techniques Corp.–131, or equivalent.

(2) Measurement is repeated by reversing location of the optical source and optical power meter in the respective central offices.

BILLING CODE 3410–15–C

(4) *Applicable results.* The end-to-end attenuation of each single mode optical fiber at 1310 and/or 1550 nanometers shall not exceed the limits specified in the applicable construction contract.

(5) *Data record.* The measurement data shall be recorded. A suggested format similar to Format V for fiber optic telecommunications plant in § 1755.407 or on a format specified in the applicable construction contract may be used.

(6) *Probable causes for nonconformance.* Failure of each optical fiber to meet the end-to-end attenuation limit could be attributed to the following:

(i) Excessive field or central office splice loss;

(ii) Excessive cable attenuation; or

(iii) Damage to the fiber optic cable during installation.

(d) *End-to-end fiber signature measurement.* (1) After placement of all fiber optic cable plant has been completed and spliced together to form a continuous optical link between end termination points, end-to-end fiber signature testing shall be performed on each optical fiber within the cable.

(2) *Method of measurement.* For single mode fibers, the end-to-end fiber signature measurement of each optical fiber in each direction shall be performed between end termination points at 1310 and/or 1550 nanometers in accordance with Figure 17.

(3) *Test equipment.* The test equipment is shown in Figure 17 as follows:

BILLING CODE 3410–15–P

FIGURE 17

END–TO–END FIBER OPTIC SIGNATURE MEASUREMENT SHOWING MEASUREMENT IN ONE DIRECTION ONLY ②

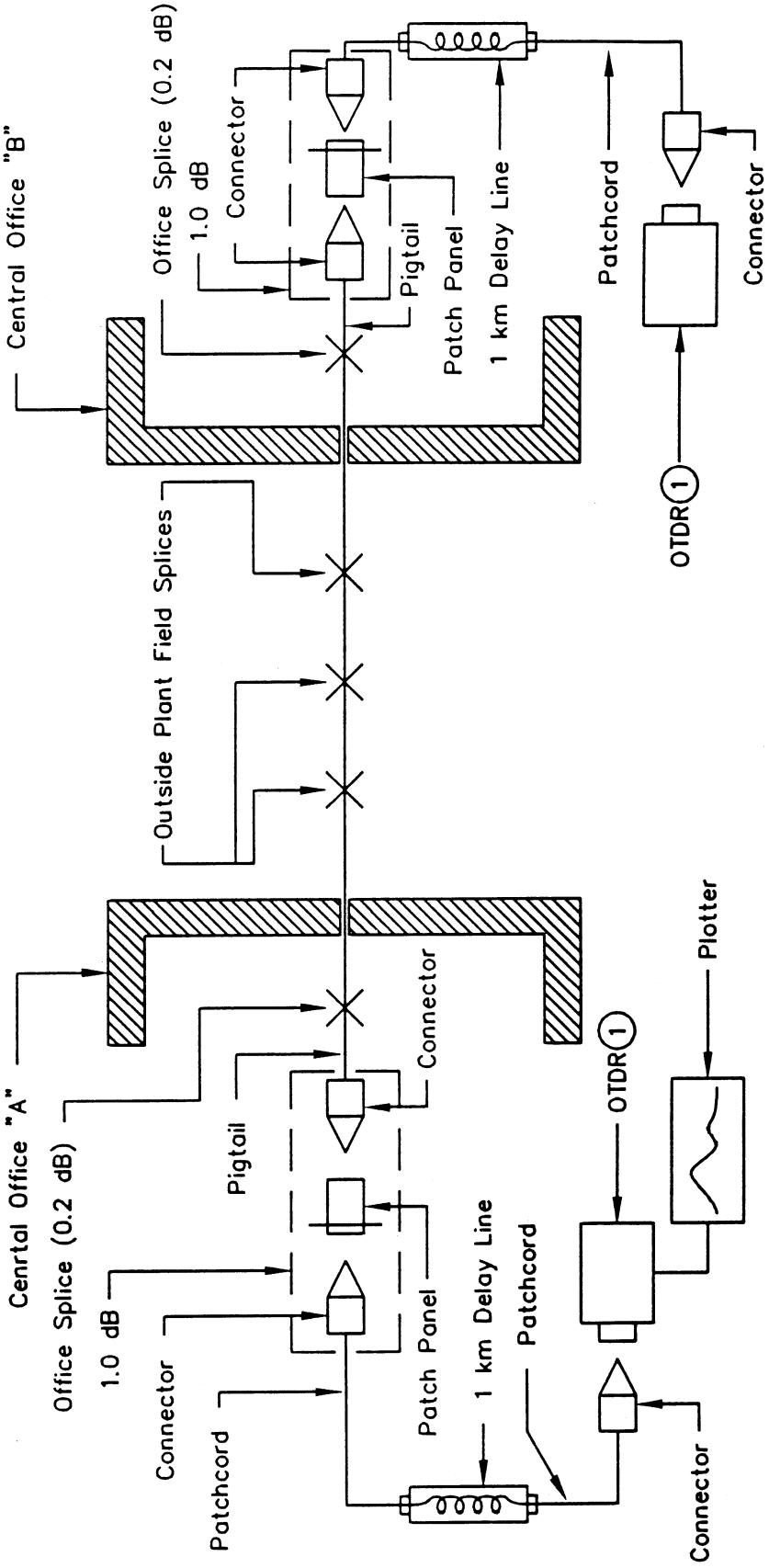


Notes:

① Tektronix–TFP2, H.P.–8146A, Opto–Electonics–DFM10, Photo Kinetics–6000, or equivalent.

② Measurement is repeated by reversing location of optical source and optical power meter in the respective central offices.

BILLING CODE 3410–15–C

(4) *Applicable results.* The appearance of each optical fiber between end termination points.

(5) *Data record.* Plot the trace of each optical fiber and retain as a permanent record for future comparison if needed.

(6) *Probable causes for nonconformance.* None.

**§ 1755.405 Voiceband data transmission measurements.**

(a) The data transmission measurements listed in this section shall be used to determine the acceptability of trunk and nonloaded subscriber loop circuits for data modem transmission.

(b) *Signal-to-C notched noise (S/CNN) measurement.* (1) When specified by the borrower, S/CNN measurements shall be made on trunk circuits and nonloaded subscriber loops. For trunk circuits, the measurement shall be made between CO locations. For nonloaded subscriber loops, the measurement shall be made from the CO to the station protector of the NID at the customer's access location.

(2) S/CNN is the logarithmic ratio expressed in dB of a 1,004 Hz holding tone signal compared to the C-message weighted noise level. S/CNN is one of the most important transmission parameters affecting the performance of data transmission because proper modem operation requires low noise relative to received power level. Since modulated carriers are used in data communication systems, noise measurements need to be performed with power on the connection to activate equipment having signal-level-dependent noise sources. For 4 kHz channels, a 1,004 Hz holding tone is used to activate the signal-dependent equipment on the channel or connection.

(3) *Method of measurement.* The S/CNN measurement shall be made using a 1,004 Hz holding tone at −13 dBm0 (decibels relative to one milliwatt, referred to a zero transmission level point) and performed in accordance with American National Standards Institute (ANSI) T1.506–1990, American National Standard for Telecommunications—Network Performance—Transmission Specifications for Switched Exchange Access Network including supplement ANSI T1.506a–1992, and American National Standards Institute/Institute of Electrical and Electronics Engineers (ANSI/IEEE) 743–1984, IEEE Standard Methods and Equipment for Measuring the Transmission Characteristics of Analog Voice Frequency Circuits. The ANSI T1.506–1990, American National Standard for Telecommunications—Network Performance—Transmission Specifications for Switched Exchange Access Network is incorporated by reference in accordance with 5 U.S.C. 522(a) and 1 CFR part 51. Copies of ANSI T1.506–1990 are available for inspection during normal business hours at RUS, room 2845, U.S. Department of Agriculture, STOP 1598, Washington, DC 20250–1598 or at the Office of the Federal Register, 800 North Capitol Street, NW., suite 700, Washington, DC. Copies are available from ANSI, Customer Service, 11 West 42nd Street, New York, New York 10036, telephone number (212) 642–4900. The ANSI/IEEE 743–1984, IEEE Standard Methods and Equipment for Measuring the Transmission Characteristics of Analog Voice Frequency Circuits is incorporated by reference in accordance with 5 U.S.C. 522(a) and 1 CFR part 51. Copies of ANSI/IEEE 743–1984 are available for inspection during normal business hours at RUS, room 2845, U.S. Department of Agriculture, STOP 1598, Washington, DC 20250–1598 or at the Office of the Federal Register, 800 North Capitol Street, NW., suite 700, Washington, DC. Copies are available from ANSI, Customer Service, 11 West 42nd Street, New York, New York 10036, telephone number (212) 642–4900.

(4) *Test equipment.* The equipment for performing the measurement shall be in accordance with ANSI/IEEE 743–1984.

(5) *Applicable results.* The S/CNN for both trunk and nonloaded subscriber loop circuits shall not be less than 31 dB.

(6) *Data record.* The measurement data shall be recorded. Suggested formats similar to Format VI, Voiceband Data Transmission Tests—Nonloaded Subscriber Loops, and Format VII, Voiceband Data Transmission Tests—Trunk Circuits, in § 1755.407 or formats specified in the applicable construction contract may be used.

(7) *Probable causes for nonconformance.* Some of the causes for failing to obtain the desired results may be due to excessive harmonic distortion, quantizing noise, phase and amplitude jitter, and loss in digital pads used for level settings.

(c) *Signal-to-intermodulation distortion (S/IMD) measurement.* (1) When specified by the borrower, S/IMD measurements shall be made on trunk circuits and nonloaded subscriber loops. For trunk circuits, the measurement shall be made between CO locations. For nonloaded subscriber loops, the measurement shall be made from the CO to the station protector of the NID at the customer's access location.

(2) S/IMD is a measure of the distortion produced by extraneous frequency cross products, known as intermodulation products, when a multi-tone tone signal is applied to a system.

(3) Intermodulation distortion (IMD) is caused by system nonlinearities acting upon the harmonic frequencies produced from an input of multiple tones. The products resulting from IMD can be more damaging than noise in terms of producing data transmission errors.

(4) IMD is measured as a signal to distortion ratio and is expressed as the logarithmic ratio in dB of the composite power of four resulting test frequencies to the total power of specific higher order distortion products that are produced. The higher order products are measured at both the 2nd order and 3rd order and are designated R2 and R3, respectively. The four frequency testing for IMD is produced with four tones of 857, 863, 1,372, and 1,388 Hz input at a composite power level of −13 dBm0.

(5) *Method of measurement.* The S/IMD measurement shall be performed in accordance with ANSI T1.506–1990 and ANSI/IEEE 743–1984.

(6) *Test equipment.* The equipment for performing the measurement shall be in accordance with ANSI/IEEE 743–1984.

(7) *Applicable results.* The 2nd order (R2) S/IMD for both trunk and nonloaded subscriber loop circuits shall not be less than 40 dB. The 3rd order (R3) S/IMD for both trunk and nonloaded subscriber loop circuits shall not be less than 40 dB.

(8) *Data record.* The measurement data shall be recorded. Suggested formats similar to Format VI for nonloaded subscriber loops and Format VII for trunk circuits in § 1755.407 or formats specified in the applicable construction contract may be used.

(9) *Probable causes for nonconformance.* Some of the causes for failing to obtain the desired results may be due to channel nonlinearities, such as compression and clipping, which cause harmonic and intermodulation distortion in a voiceband signal.

(d) *Envelope delay distortion (EDD) measurement.* (1) When specified by the borrower, EDD measurements shall be made on trunk circuits and nonloaded subscriber loops. For trunk circuits, the measurement shall be made between CO locations. For nonloaded subscriber loops, the measurement shall be made from the CO to the station protector of the NID at the customer's access location.

(2) EDD is a measure of the linearity or uniformity of the phase versus frequency characteristics of a transmission facility. EDD is also known as relative envelope delay (RED).

(3) EDD is specifically defined as the delay relative to the envelope delay at the reference frequency of 1,704 Hz. EDD is typically measured at two frequencies, one low and one high in the voiceband. The low frequency measurement is made at 604 Hz. The high frequency measurement is made at 2,804 Hz.

(4) *Method of measurement.* The EDD measurement shall be performed in accordance with ANSI T1.506–1990 and ANSI/IEEE 743–1984.

(5) *Test equipment.* The equipment for performing the measurement shall be in accordance with ANSI/IEEE 743–1984.

(6) *Applicable results.* The EDD for both trunk and nonloaded subscriber loop circuits at the low frequency of 604 Hz shall not exceed 1,500 microseconds. The EDD for both trunk and nonloaded subscriber loop circuits at the high frequency of 2,804 Hz shall not exceed 1,000 microseconds.

(7) *Data record.* The measurement data shall be recorded. Suggested formats similar to Format VI for nonloaded subscriber loops and Format VII for trunk circuits in § 1755.407 or formats specified in the applicable construction contract may be used.

(8) *Probable causes for nonconformance.* Some of the causes for failing to obtain the desired results may be due to nonlinearity of the phase versus frequency characteristic of the transmission facility. This nonlinear phase versus frequency characteristic of the transmission facility causes the various frequency components to travel at different transit times which results in successively transmitted data pulses to overlap at the receive end. The overlapping of the pulses at the receive end results in distortion of the received signal. Excessive EDD on the transmission facility may be reduced using data modems with equalization or by conditioning the transmission line.

(e) *Amplitude jitter (AJ) measurement.* (1) When specified by the borrower, AJ measurements shall be made on trunk circuits and nonloaded subscriber loops. For trunk circuits, the measurement shall be made between CO locations. For nonloaded subscriber loops, the measurement shall be made from the CO to the station protector of the NID at the customer's access location.

(2) AJ is any fluctuation in the peak amplitude value of a fixed tone signal at 1,004 Hz from its nominal value. AJ is expressed in peak percent amplitude modulation.

(3) AJ is measured in two separate frequency bands, 4–300 Hz and 20—300 Hz. The 4—300 Hz band is important for modems employing echo canceling capabilities. The 20–300 Hz band is used for modems that do not employ echo cancelers.

(4) Amplitude modulation can affect the error performance of voiceband data modems. The measurement of amplitude jitter indicates the total effect on the amplitude of the holding tone of incidental amplitude modulation and other sources including quantizing and message noise, impulse noise, gain hits, phase jitter, and additive tones such as single-frequency interference.

(5) *Method of measurement.* The AJ measurement shall be performed in accordance with ANSI T1.506–1990 and ANSI/IEEE 743–1984.

(6) *Test equipment.* The equipment for performing the measurement shall be in accordance with ANSI/IEEE 743–1984.

(7) *Applicable results.* The AJ for both trunk and nonloaded subscriber loop circuits in the 4—300 Hz frequency band shall not exceed 6%. The AJ for both trunk and nonloaded subscriber loop circuits in the 20—300 Hz frequency band shall not exceed 5%.

(8) *Data record.* The measurement data shall be recorded. Suggested formats similar to Format VI for nonloaded subscriber loops and Format VII for trunk circuits in § 1755.407 or formats specified in the applicable construction contract may be used.

(9) *Probable causes for nonconformance.* Some of the causes for failing to obtain the desired results may be due to excessive S/CNN, impulse noise, and phase jitter.

(f) *Phase jitter (PJ) measurement.* (1) When specified by the borrower, PJ measurements shall be made on trunk circuits and nonloaded subscriber loops. For trunk circuits, the measurement shall be made between CO locations. For nonloaded subscriber loops, the measurement shall be made from the CO to the station protector of the NID at the customer's access location.

(2) PJ is any fluctuation in the zero crossings of a fixed tone signal (usually 1,004 Hz) from their nominal position in time within the voiceband. PJ is expressed in terms of either degrees peak-to-peak (°p–p) or in terms of a Unit Interval (UI). One UI is equal to 360° p–p.

(3) PJ measurements are typically performed in two nominal frequency bands. The frequency bands are 20–300 Hz band and either the 2–300 Hz band or the 4–300 Hz band. The 20–300 Hz band is important to all phase-detecting modems. The 4–300 Hz band or the 2–300 Hz band is important for modems employing echo canceling capabilities.

(4) Phase jitter can affect the error performance of voiceband data modems that use phase detection techniques. The measurement of phase jitter indicates the total effect on the holding tone of incidental phase modulation and other sources including quantizing and message noise, impulse noise, phase hits, additive tones such as single-frequency interference, and digital timing jitter.

(5) *Method of measurement.* The PJ measurement shall be performed in accordance with ANSI T1.506–1990 and ANSI/IEEE 743–1984.

(6) *Test equipment.* The equipment for performing the measurement shall be in accordance with ANSI/IEEE 743–1984.

(7) *Applicable results.* The PJ for both trunk and nonloaded subscriber loop circuits in the 4–300 Hz frequency band shall not exceed 6.5° p–p. The PJ for both trunk and nonloaded subscriber loop circuits in the 20–300 Hz frequency band shall not exceed 10.0° p–p.

(8) *Data record.* The measurement data shall be recorded. Suggested formats similar to Format VI for nonloaded subscriber loops and Format VII for trunk circuits in § 1755.407 or formats specified in the applicable construction contract may be used.

(9) *Probable causes for nonconformance.* Some of the causes for failing to obtain the desired results may be due to excessive S/CNN, impulse noise, and amplitude jitter.

(g) *Impulse noise measurement.* (1) When specified by the borrower, impulse noise measurements shall be made on trunk circuits and nonloaded subscriber loops. For trunk circuits, the measurement shall be made between CO locations. For nonloaded subscriber loops, the measurement shall be made from the CO to the station protector of the NID at the customer's access location.

(2) Impulse noise is a measure of the presence of unusually large noise excursions of short duration that are beyond the normal background noise levels on a facility. Impulse noise is typically measured by counting the number of occurrences beyond a particular noise reference threshold in a given time interval. The noise reference level is C-message weighted.

(3) *Method of measurement.* The impulse noise measurement shall be performed using a 1,004 Hz tone at –13 dBm0 and in accordance with ANSI T1.506–1990 and ANSI/IEEE 743–1984.

(4) *Test equipment.* The equipment for performing the measurement shall be in accordance with ANSI/IEEE 743–1984.

(5) *Applicable results.* The impulse noise for both trunk and nonloaded subscriber loop circuits shall not exceed 65 dBrnC0 (decibels relative to one picowatt reference noise level, measured with C-message frequency weighting, referred to a zero transmission level point). The impulse noise requirement shall be based upon a maximum of 5 counts in a 5 minute period at equal to or greater than the indicated noise thresholds.

(6) *Data record.* The measurement data shall be recorded. Suggested formats similar to Format VI for nonloaded subscriber loops and Format VII for trunk circuits in § 1755.407 or formats specified in the applicable construction contract may be used.

(7) *Probable causes for nonconformance.* Some of the causes for failing to obtain the desired results may be due to excessive transient signals originating from the various switching operations.

**§ 1755.406 Shield or armor ground resistance measurements.**

(a) Shield or armor ground resistance measurements shall be made on completed lengths of copper cable and wire plant and fiber optic cable plant.

(b) *Method of measurement.* (1) The shield or armor ground resistance measurement shall be made between the copper cable and wire shield and ground and between the fiber optic cable armor and ground, respectively. The measurement shall be made either on cable and wire lengths before splicing and before any ground connections are made to the cable or wire shields or armors. Optionally, the measurement may be made on cable and wire lengths after splicing, but all ground connections must be removed from the section under test.

(2) The method of measurement using either an insulation resistance test set or a dc bridge type megohmmeter shall be as shown in Figure 18 as follows:

BILLING CODE 3410–15–P

# FIGURE 18

## SHIELD OR ARMOR GROUND RESISTANCE MEASUREMENT

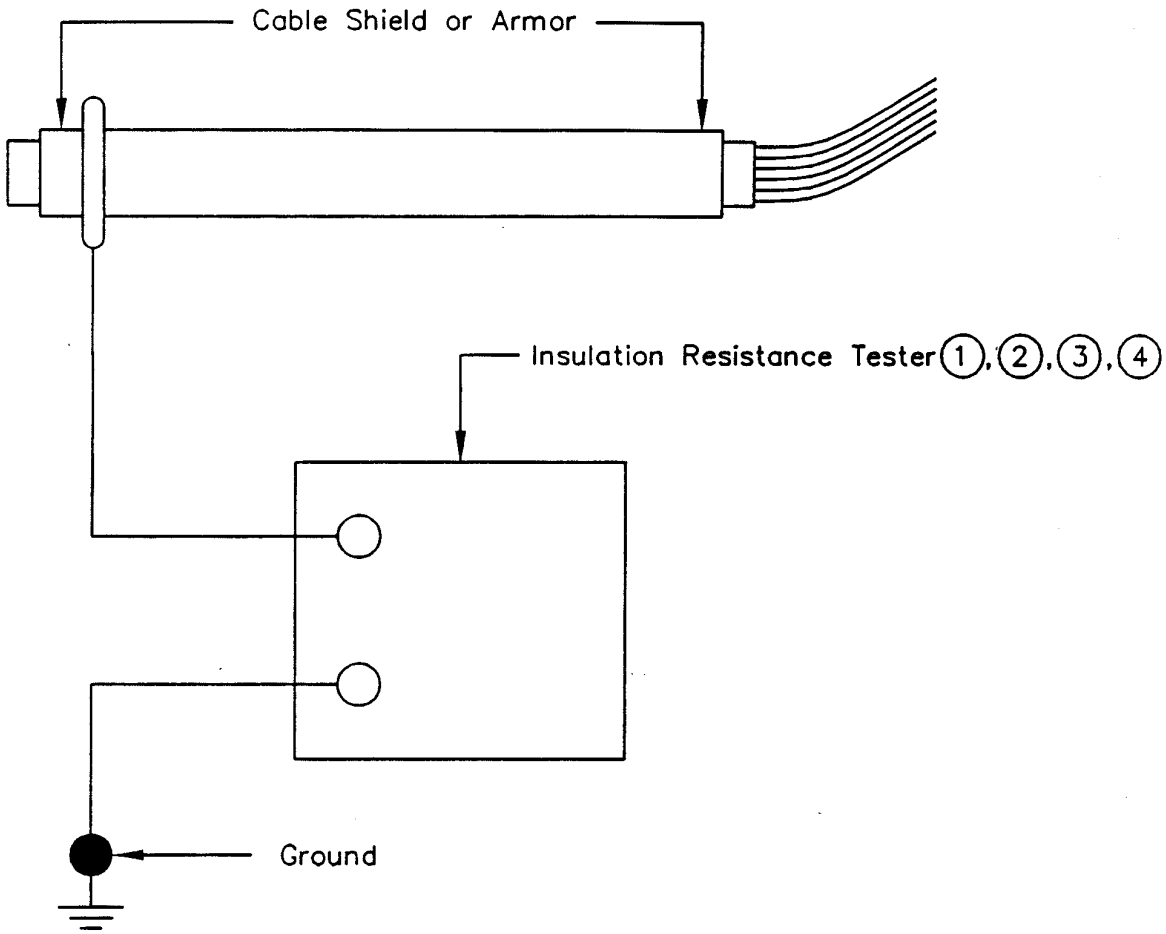


Notes:

(1.) For hand cranked or battery operated Insulation Resistance Testers, the output voltage should not exceed 500 volts dc.

(2.) For dc bridge type Megohmmeters, the voltage applied to the shield or armor under test should not be less than 250 volts dc nor greater than 1000 volts dc when using instruments having adjustable test voltage levels.

(3.) When the distance between test points results in a measurement beyond the range of the test equipment, extended range devices recommended by the test equipment manufacturer may be used to assist in making the measurement.

(4.) Biddle CO.–Model BM 200, Associate Research–Model 263, General Radio–1864 Megohm Meter, or equivalent.

BILLING CODE 3410–15–C

(c) *Test equipment.* (1) The shield or armor ground resistance measurements may be made using an insulation resistance test set, a dc bridge type megohmmeter, or a commercially available fault locator.

(2) The insulation resistance test set should have an output voltage not to exceed 500 volts dc and may be hand cranked or battery operated.

(3) The dc bridge type megohmmeter, which may be ac powered, should have scales and multipliers which make it possible to accurately read resistance values of 50,000 ohms to 10 megohms. The voltage that is applied to the shield or armor during the test should not be less than ''250 volts dc'' nor greater than ''1,000 volts dc'' when using an instrument having adjustable test voltage levels.

(4) Commercially available fault locators may be used in lieu of the above equipment, if the devices are capable of detecting faults having resistance values of 50,000 ohms to 10 megohms. Operation of the devices and method of locating the faults should be in accordance with manufacturer's instructions.

(d) *Applicable results.* (1) For all new copper cable and wire facilities and all new fiber optic cable facilities, the shield or armor ground resistance levels normally exceed 1 megohm-mile (1.6 megohm-km) at 68°F (20°C). A value of 100,000 ohm-mile (161,000 ohm-km) at 68°F (20°C) shall be the minimum acceptable value of the shield or armor ground resistance.

(2) Shield or armor ground resistance varies inversely with length and temperature. In addition other factors which may affect readings could be soil conditions, faulty test equipment and incorrect test procedures.

(3) For the resistance test method and dc bridge type megohmmeter, the ohm-mile (ohm-km) value for the shield or armor ground resistance shall be computed by multiplying the actual scale reading in ohms on the test set by the length in miles (km) of the cable or wire under test.

(4)(i) The objective shield or armor ground resistance may be determined by dividing 100,000 by the length in miles (161,000 by the length in km) of the cable or wire under test. The resulting value is the minimum acceptable meter scale reading in ohms. Examples for paragraphs (d)(3) and (d)(4) of this section are as follows:

Equation 1. Test Set: Scale Reading * Length = Resistance-Length

75,000 ohms * 3 miles = 225,000 ohm-mile

(75,000 ohms * 4.9 km = 367,000 ohm-km)

Equation 2. 100,000 ohm-mile ÷ Length = Minimum Acceptable Meter Scale Reading

100,000 ohm-mile ÷ 3 miles = 33,333 ohms

(161,000 ohm-km ÷ 4.9 km = 32,857 ohms)

(ii) Since the 33,333 ohms (32,857 ohms) is the minimum acceptable meter scale reading and the meter scale reading was 75,000 ohms, the cable is considered to have met the 100,000 ohm-mile (161,000 ohm-km) requirement.

(5) Due to the differences between various jacketing materials used in manufacturing cable or wire and to varying soil conditions, it is impractical to provide simple factors to predict the magnitude of variation in shield or armor to ground resistance due to temperature. The variations can, however, be substantial for wide excursions in temperature from the ambient temperature of 68°F (20°C).

(e) *Data record.* The data shall be corrected to the length requirement of ohm-mile (ohm-km) and a temperature of 68°F (20°C) and shall be recorded on a form specified in the applicable construction contract.

(f) *Probable causes for nonconformance.* (1) When results of resistance measurements are below the 100,000 ohm-mile (161,000 ohm-km) requirement at 68°F (20°C), the jacket temperature, soil conditions, test equipment and method shall be reviewed before the cable or wire is considered a failure. If the temperature is approximately 68°F (20°C) and soil conditions are acceptable, and a reading of less than 100,000 ohm-mile (161,000 ohm-km) is indicated, check the calibration of the equipment; as well as, the test method. If the equipment was found to be out of calibration, recalibrate the equipment and remeasure the cable or wire. If the temperature was 86°F (30°C) or higher, the cable or wire shall be remeasured at a time when the temperature is approximately 68°F (20°C). If the test was performed in unusually wet soil, the cable or wire shall be retested after the soil has reached normal conditions. If after completion of the above steps, the resistance value of 100,000 ohm-mile (161,000 ohm-km) or greater is obtained, the cable or wire shall be considered acceptable.

(2) When the resistance value of the cable or wire is still found to be below 100,000 ohm-mile (161,000 ohm-km) requirement after completion of the steps listed in paragraph (f)(1) of this section, the fault shall be isolated by performing shield or armor ground resistance measurements on individual cable or wire sections.

(3) Once the fault or faults have been isolated, the cable or wire jacket shall be repaired in accordance with § 1755.200, RUS Standard for Splicing Copper and Fiber Optic Cables or the entire cable or wire section may be replaced at the request of the borrower.

**§ 1755.407 Data formats.**

The following suggested formats listed in this section may be used for recording the test data:

BILLING CODE 3410–15–P

# FORMAT I

## OUTSIDE PLANT ACCEPTANCE TESTS – SUBSCRIBER LOOPS

PROJECT: _____ Date of Test: _____

CO NAME OF LOCATION: _____ Time Measured: _____ Tester (Contractor): _____

CO or RST GROUND RESISTANCE: _____ Ohms (Before tying to elect. neutral) Temperature: _____ Tester (Engineer): _____

CO or RST GROUND RESISTANCE: _____ Ohms (After tying to elect. neutral) Soil Type: _____ Tester (Borrower): _____

Test Equip.: _____ Moisture Content of Soil: _____

| Route No. | Pair No. | Length (Miles or km) | DC Insul. Resist. (Megohms) | | | DC Loop Resist. (Ohms) | | | Measd. DC Res. Unbal. (Ohms) | Open Ckt Meas. Type (a,b,c,d) | | Insertion Loss at kHz Shown | | | | | | Line Noise | | | |
|---|---|---|---|---|---|---|---|---|---|---|---|---|---|---|---|---|---|---|---|---|---|
| | | | T–GD | R–GD | Min. Permit | Comp. 68°F (20°C) | Measd. ___°F (___°C) | Corr. 68°F (20°C) | | SRL (dB) | Freq. (kHz) | 1.0 | 1.7 | 2.3 | 2.8 | 3.4 | 4.0 | NMC | NG–C | NGF | Bal. |
| | | | | | | | | | | | | | | | | | | | | | |
| | | | | | | | | | | | | | | | | | | | | | |
| | | | | | | | | | | | | | | | | | | | | | |
| | | | | | | | | | | | | | | | | | | | | | |
| | | | | | | | | | | | | | | | | | | | | | |
| | | | | | | | | | | | | | | | | | | | | | |
| | | | | | | | | | | | | | | | | | | | | | |
| | | | | | | | | | | | | | | | | | | | | | |
| | | | | | | | | | | | | | | | | | | | | | |
| | | | | | | | | | | | | | | | | | | | | | |
| | | | | | | | | | | | | | | | | | | | | | |
| | | | | | | | | | | | | | | | | | | | | | |
| | | | | | | | | | | | | | | | | | | | | | |
| | | | | | | | | | | | | | | | | | | | | | |
| | | | | | | | | | | | | | | | | | | | | | |
| | | | | | | | | | | | | | | | | | | | | | |
| | | | | | | | | | | | | | | | | | | | | | |

Shield or Shield/Armor Continuity Data has been attached. Yes ___ No___

# FORMAT II

## OUTSIDE PLANT ACCEPTANCE TESTS – TRUNKS CIRCUITS

PROJECT: _____ Date of Test: _____

CO NAME OF LOCATION: _____ Tester (Contractor): _____

OFFICE A: _____ Tester (Engineer): _____

OFFICE B: _____ Tester (Borrower): _____

ELECTRONIC EQUIPMENT GROUND RESISTANCE: _____ Ohms

Time Measured: _____ Soil Type: _____ Test Equip: _____

Temperature: _____ Moisture Content of Soil: _____

In the space below show in a simple line diagram the facility makeup including all gauges, lengths, cable types, and repeater locations if any.

| Trunk No. | Pair No. Off. A | Pair No. Off. B | Length Miles or km | DC Insul. Resist. (Megohms) | | | DC Loop Resist. (Ohms) | | | Measd DC Res. Unbal. (Ohms) |
|---|---|---|---|---|---|---|---|---|---|---|
| | | | | T–GD | R–GD | Min. Permit | Comp. 68°F (20°C) | Measd. ___°F (___°C) | Corr. 68°F (20°C) | |
| | | | | | | | | | | |
| | | | | | | | | | | |
| | | | | | | | | | | |
| | | | | | | | | | | |
| | | | | | | | | | | |
| | | | | | | | | | | |
| | | | | | | | | | | |
| | | | | | | | | | | |
| | | | | | | | | | | |
| | | | | | | | | | | |

# FORMAT III

## OUTSIDE PLANT ACCEPTANCE TESTS – T1 or T1C CARRIER PAIRS

PROJECT: _____ Type of Proposed Carrier: _____ (Trunk – Subscriber)

LOCATION: From _____ (CO Name) to _____ (CO Name) Shield or Shield/Armor Continuity has been checked: _____

Aerial: _____ Buried: _____ Weather: _____ Temp.: _____ Date: _____ Sheet ____ of ____

CARRIER FREQUENCY INSERTION LOSS MEASUREMENTS (1)

| From _____ to _____ | | | | | From _____ to _____ | | | | |
|---|---|---|---|---|---|---|---|---|---|
| Freq (2) (kHz) | Send Level (dBm) | Receive Level(dBm) | Measured Loss(dB) | Estimated (3) Loss (dB) | Freq (2) (kHz) | Send Level (dBm) | Receive Level(dBm) | Measured Loss(dB) | Estimated (3) Loss (dB) |
| 20 | | | | | 20 | | | | |
| 60 | | | | | 60 | | | | |
| 100 | | | | | 100 | | | | |
| 140 | | | | | 140 | | | | |
| 180 | | | | | 180 | | | | |
| 200 | | | | | 200 | | | | |
| 300 | | | | | 300 | | | | |
| 400 | | | | | 400 | | | | |
| 600 | | | | | 600 | | | | |
| 700 | | | | | 700 | | | | |
| 772 | | | | | 772 | | | | |
| 800 | | | | | 800 | | | | |
| 1000 | | | | | 1000 | | | | |
| 1200 | | | | | 1200 | | | | |
| 1300 | | | | | 1300 | | | | |
| 1400 | | | | | 1400 | | | | |
| 1500 | | | | | 1500 | | | | |
| 1576 | | | | | 1576 | | | | |

Notes: (1) Refer to RUS TE&CM 925 on How to Make Measurements. (2) Go as high in frequency as required by contract.
(3) From either Table 7 or 8 in Paragraph (g)(4)(iii)(A) of Section 1755.403; Correct loss for temperature.

# FORMAT IV

## OUTSIDE PLANT ACCEPTANCE TESTS – STATION CARRIER PAIRS

PROJECT: _____ Type of Proposed Carrier: _____ (Trunk – Subscriber)

LOCATION: From _____ (CO Name) to _____ (Sub.) Shield or Shield/Armor Continuity has been checked: _____

Aerial: _____ Buried: _____ Weather: _____ Temp.: _____ Date: _____ Sheet ____ of ____

CARRIER FREQUENCY INSERTION LOSS MEASUREMENTS (1)

| From _____ to _____ | | | | | From _____ to _____ | | | | |
|---|---|---|---|---|---|---|---|---|---|
| Freq. (kHz) | Send Level (dBm) | Receive Level(dBm) | Measured Loss(dB) | Estimated (2) Loss (dB) | Freq. (kHz) | Send Level (dBm) | Receive Level(dBm) | Measured Loss(dB) | Estimated (2) Loss (dB) |
| 20 | | | | | 20 | | | | |
| 60 | | | | | 60 | | | | |
| 100 | | | | | 100 | | | | |
| 112 | | | | | 112 | | | | |
| 140 | | | | | 140 | | | | |

| From _____ to _____ | | | | | From _____ to _____ | | | | |
|---|---|---|---|---|---|---|---|---|---|
| Freq. (kHz) | Send Level (dBm) | Receive Level(dBm) | Measured Loss(dB) | Estimated (2) Loss (dB) | Freq. (kHz) | Send Level (dBm) | Receive Level(dBm) | Measured Loss(dB) | Estimated (2) Loss (dB) |
| 20 | | | | | 20 | | | | |
| 60 | | | | | 60 | | | | |
| 100 | | | | | 100 | | | | |
| 112 | | | | | 112 | | | | |
| 140 | | | | | 140 | | | | |

Notes:

(1) Refer to RUS TE&CM 925 on How to Make Measurements.

(2) From either Table 7 or 8 in Paragraph (g)(4)(iii)(A) of Section 1755.403; correct loss for temperature.

# FORMAT V

## OUTSIDE PLANT ACCEPTANCE TESTS

## FIBER OPTIC TELECOMMUNICATIONS PLANT

PROJECT: _____ Date of Test: _____

TERMINATION POINT A: _____ Tester (Contractor): _____

TERMINATION POINT B: _____ Tester (Engineer): _____

Time Measured: _____ Tester (Borrower): _____

Temperature: _____ Test Equip: _____

Soil Type: _____ Moisture Content of Soil: _____

| Route No. | Fiber No. | Length Miles or km | Splice Loss (dB) | | End-to-End Attenuation (dB/km) | End-to-End Fiber Signature | |
|---|---|---|---|---|---|---|---|
| | | | FIELD | CO | | Yes | No |
| | | | | | | | |
| | | | | | | | |
| | | | | | | | |
| | | | | | | | |
| | | | | | | | |
| | | | | | | | |
| | | | | | | | |
| | | | | | | | |
| | | | | | | | |
| | | | | | | | |

Armor Continuity Data has been attached. Yes ____ No ____

# FORMAT VI

## VOICEBAND DATA TRANSMISSION TESTS – NONLOADED SUBSCRIBER LOOPS

PROJECT: _____ Date of Test: _____

LOCATION: From _____ (CO Name) to _____ (Sub. Name)

AERIAL: _____ Tester (Contractor): _____

BURIED: _____ Tester (Engineer): _____

TEMPERATURE: _____ DATE: _____

UNDERGROUND: _____ Tester (Borrower): _____

Test Equip.: _____ Sheet ____ of ____

| Route No. | Pair No. | Length (Miles or km) | S/CNN 1,004 Hz Tone at −13 dBm0 (dB) | S/IMD (dB) | | Impulse Noise (dBrnC0) | EDD (Microseconds) | | AJ (%) | | PJ (°p−p) | |
|---|---|---|---|---|---|---|---|---|---|---|---|---|
| | | | | R2 | R3 | | 604 Hz | 2,804 Hz | 4 to 300 Hz | 20 to 300 Hz | 4 to 300 Hz | 20 to 300 Hz |
| | | | | | | | | | | | | |
| | | | | | | | | | | | | |
| | | | | | | | | | | | | |
| | | | | | | | | | | | | |
| | | | | | | | | | | | | |
| | | | | | | | | | | | | |
| | | | | | | | | | | | | |
| | | | | | | | | | | | | |
| | | | | | | | | | | | | |
| | | | | | | | | | | | | |
| | | | | | | | | | | | | |
| | | | | | | | | | | | | |
| | | | | | | | | | | | | |
| | | | | | | | | | | | | |
| | | | | | | | | | | | | |
| | | | | | | | | | | | | |

# FORMAT VII

## VOICEBAND DATA TRANSMISSION TESTS – TRUNK CIRCUITS

PROJECT: _____ Date of Test: _____

LOCATION: From _____ (CO Name) to _____ (CO Name)

AERIAL: _____ Tester (Contractor): _____

BURIED: _____ Tester (Engineer): _____

TEMPERATURE: _____ DATE: _____ UNDERGROUND: _____ Tester (Borrower): _____

Test Equip.: _____ Sheet ____ of ____

| Trunk No. | Pair No. CO–A | Pair No. CO–B | Length (Miles or km) | S/CNN 1,004 Hz Tone at −13 dBm0 (dB) | S/IMD (dB) | | Impulse Noise (dBrnC0) | EDD (Microseconds) | | AJ (%) | | PJ (°p–p) | |
|---|---|---|---|---|---|---|---|---|---|---|---|---|---|
| | | | | | R2 | R3 | | 604 Hz | 2,804 Hz | 4 to 300 Hz | 20 to 300 Hz | 4 to 300 Hz | 20 to 300 Hz |
| | | | | | | | | | | | | | |
| | | | | | | | | | | | | | |
| | | | | | | | | | | | | | |
| | | | | | | | | | | | | | |
| | | | | | | | | | | | | | |
| | | | | | | | | | | | | | |
| | | | | | | | | | | | | | |
| | | | | | | | | | | | | | |
| | | | | | | | | | | | | | |
| | | | | | | | | | | | | | |
| | | | | | | | | | | | | | |
| | | | | | | | | | | | | | |
| | | | | | | | | | | | | | |
| | | | | | | | | | | | | | |
| | | | | | | | | | | | | | |
| | | | | | | | | | | | | | |

Dated: April 24, 1997.

**Jill Long Thompson,**

*Under Secretary, Rural Development.*

[FR Doc. 97–11316 Filed 5–1–97; 8:45 am]

BILLING CODE 3410–15–C

---

## DEPARTMENT OF TRANSPORTATION

## Federal Aviation Administration

## 14 CFR Part 39

**[Docket No. 96–NM–150–AD; Amendment 39–10010; AD 97–09–14]**

**RIN 2120–AA64**

## Airworthiness Directives; Boeing Model 737–100, –200, –300, –400, and –500 Series Airplanes

**AGENCY:** Federal Aviation Administration, DOT.

**ACTION:** Final rule.

---

**SUMMARY:** This amendment adopts a new airworthiness directive (AD), applicable to all Boeing Model 737–100, –200, –300, –400, and –500 series airplanes, that requires an inspection of reworked aileron/elevator power control units (PCU's) and rudder PCU's to determine if reworked PCU manifold cylinder bores containing chrome plating are installed, and replacement of the cylinder bores with bores that have been reworked using the oversize method or the steel sleeve method, if necessary. This amendment is prompted by a review of the design of the flight control systems on Model 737 series airplanes. The actions specified by this AD are intended to prevent a reduced rate of movement of the elevator, aileron, or rudder due to contamination of hydraulic fluid from chrome plating chips; such reduced rate of movement, if not corrected, could result in reduced controllability of the airplane.

**DATES:** Effective June 6, 1997.

The incorporation by reference of certain publications listed in the regulations is approved by the Director of the Federal Register as of June 6, 1997.

**ADDRESSES:** The service information referenced in this AD may be obtained from Boeing Commercial Airplane Group, P.O. Box 3707, Seattle, Washington 98124–2207. This information may be examined at the Federal Aviation Administration (FAA), Transport Airplane Directorate, Rules Docket, 1601 Lind Avenue, SW., Renton, Washington; or at the Office of the Federal Register, 800 North Capitol Street, NW., suite 700, Washington, DC.

**FOR FURTHER INFORMATION CONTACT:** Don Kurle, Senior Engineer, Systems and Equipment Branch, ANM–130S, FAA, Transport Airplane Directorate, Seattle Aircraft Certification Office, 1601 Lind Avenue, SW., Renton, Washington 98055–4056; telephone (206) 227–2798; fax (206) 227–1181.

**SUPPLEMENTARY INFORMATION:** A proposal to amend part 39 of the Federal Aviation Regulations (14 CFR part 39) to include an airworthiness directive (AD) that is applicable to all Boeing Model 737–100, –200, –300, –400, and –500 series airplanes was published in the **Federal Register** on August 28, 1996 (61 FR 44241). That action proposed to require an inspection of the aileron/elevator power control units (PCU) and the rudder PCU to determine if reworked PCU manifold cylinder bores containing chrome plating are installed, and replacement of the cylinder bores with bores that have been reworked using the oversize method or the steel sleeve method, if necessary.

Interested persons have been afforded an opportunity to participate in the making of this amendment. Due consideration has been given to the comments received.

### Support for the Proposal

One commenter supports the proposed rule.

**Request to Revise Statement of Findings of Critical Design Review Team**

One commenter requests the second paragraph of the Discussion section that appeared in the preamble to the proposed rule be revised to accurately reflect the findings of the Critical Design Review (CDR) team. The commenter asks that the FAA delete the one sentence in that paragraph, which read: ''The recommendations of the team include various changes to the design of the flight control systems of these airplanes, as well as correction of certain design deficiencies.'' The commenter suggests that the following sentences should be added: ''The team did not find any design issues that could lead to a definite cause of the accidents that gave rise to this effort. The recommendations of the team include various changes to the design of the flight control systems of these airplanes, as well as incorporation of certain design improvements in order to enhance its already acceptable level of safety.''

The FAA does not find that a revision to this final rule in the manner suggested by the commenter is necessary, since the Discussion section of a proposed rule does not reappear in a final rule. The FAA acknowledges that the CDR team did not find any design issue that could lead to a definite cause of the accidents that gave rise to this effort. However, as a result of having conducted the CDR of the flight control systems on Boeing Model 737 series airplanes, the team indicated that there are a number of recommendations that should be addressed by the FAA for each of the various models of the Model 737. In reviewing these recommendations, the FAA has concluded that they address unsafe conditions that must be corrected through the issuance of AD's. Therefore, the FAA does not concur that these design changes merely ''enhance [the Model 737's] already acceptable level of safety.''

**Requests To Withdraw the Proposal: No Supporting Data**

One commenter contends that the proposal is not justified since it cannot be supported by data. The commenter does not consider that the proposal contributes to improving the safety aspects of Model 737 airplanes. The commenter states that the CDR team's report does not indicate that there is any evidence to tie the referenced service documents to any in-service problems or accidents. The commenter adds that the FAA has not indicated it has reviewed any routine component tear-down reports that would support the proposed actions. The commenter concludes that the FAA does not understand the enormity of the proposed action. A second commenter states that it has incorporated the repair on several PCU's and has not witnessed a single failure of the chrome plating of the cylinder bore. The FAA infers from these remarks that the commenters request the proposed rule be withdrawn.

In support of its request to withdraw the proposal, the Air Transport Association (ATA) of America, points out that any performance degradation that might result from chrome plate separation would be determined readily by flight crews prior to departure. The ATA also indicates that if the plating repair were suspect, an incident involving separation would have been identified early in the service life of the units. The ATA contends that service experience and tests conducted by the National Transportation Safety Board (NTSB) confirm that there is no justification to consider this issue as an existing airworthiness concern.

The FAA does not concur with the requests of these commenters to withdraw the proposal. The FAA has received at least five reports from operators of Model 737 series airplanes indicating that the chrome plating separated from reworked cylinder bores of the aileron/elevator PCU's. A number of aileron/elevator and rudder PCU's were repaired using chrome plating on the aluminum cylinder bores. Separation of the chrome plating could result in contamination of hydraulic fluid from chrome plating chips. Such

contamination can result in a reduced rate of movement of the elevator, aileron, or rudder, and consequent reduced controllability of the airplane. The FAA's position is that this condition is a potential unsafe condition that must be corrected in order to ensure the safety of the affected fleet.

The FAA acknowledges that in some cases (depending on when chrome plate separation occurred), prior to departure, flight crews could determine any performance degradation that might result from chrome plate separation. However, if the separation occurred during flight, the flight crew may be unaware of the occurrence and, when the flight crew's workload is heavy, the crew's ability to control the airplane may be reduced. The FAA considers that this presents a potential unsafe condition that must be corrected.

No commenter presented evidence that would indicate chrome separation occurs early in the life of the unit. Further, the FAA assumes the NTSB testing discussed by one commenter refers to chip shear testing accomplished by the NTSB on the rudder PCU. While it appears that a chrome chip should be able to be sheared by the hydraulic action of the PCU and not cause a PCU jam, chrome chips can still contaminate the interior of the rudder, aileron, and elevator PCU's, which could cause sluggish flight control operation.

**Request To Withdraw the Proposal: Revise Component Maintenance/ Overhaul Manuals**

One commenter recommends revising the proposal to require a Component Maintenance Manual (CMM) revision to require inspection at the next shop visit to identify any units with chrome bores and rework those in accordance with the service letter in order to eliminate what the commenter finds to be an enormous financial and operational impact that would be imposed on operators if the proposed rule is issued.

One commenter, Boeing, indicates that separation of chrome plating from aluminum cylinder bores has not been a significant in-service problem; in fact, there have been no reports of chrome plating separation since 1985. Boeing asserts that since no direct safety hazard related to chrome plating has been established, the proposal should be withdrawn and, instead, removal of chrome plating should be required through a revision to the PCU overhaul manuals for the rudder and aileron/ elevator.

The FAA does not concur with the commenters' requests to withdraw this AD and revise the component maintenance or overhaul manuals instead. The FAA considers issuance of an AD necessary in this instance since an unsafe condition has been identified, and AD's are the means by which accomplishment of procedures and adherence to specific compliance times are made mandatory to correct that unsafe condition. While the FAA has no objection to Boeing revising the component maintenance or overhaul manuals to provide a procedure for an inspection to identify any units with chrome bores and rework of those units in accordance with the service letter, or for removal of chrome plating, such revision will not affect the requirements of this AD.

**Requests To Limit Applicability to Certain PCU's**

In lieu of withdrawing the proposal, several commenters suggest limiting the applicability of the proposed AD to certain PCU's:

One commenter states that no PCU's containing chrome plated manifold cylinder bores were produced or reworked after April 1, 1985 (the date of issuance of Boeing Service Letter 737–SL–27–30); therefore, only those PCU's manufactured or reworked prior to that date should be subject to the requirements of the proposal.

Two other commenters state that, as of June 5, 1985, the chrome plating procedure was removed from the PCU overhaul manuals. One of these commenters asserts that any PCU's manufactured after that date would not have been reworked or manufactured with chrome plating in the cylinder bores; therefore, those PCU's should be excluded from the applicability of the proposal.

Another commenter states that the applicability of the proposal should be limited only to those units manufactured prior to 1980. The commenter does not provide justification for selecting 1980 as a cutoff date. This commenter adds that a records search should be allowed to confirm that no chrome plate repairs to the bore have been accomplished.

One commenter states that inspection should be required only for valve bodies made from 2024 aluminum, since the repair procedures were changed in 1987 and there have been no problems since the original issue of the service letter. The only reported problems have been with the old-style valve bodies made from 2024 aluminum. (Production of the 7075 aluminum valve body started in the late 1970's.)

Boeing suggests that only those PCU's manufactured prior to June 1984 should be included in the applicability of the proposal. This date is one year prior to the revisions of the overhaul manual, which eliminated chrome plating as a repair procedure. (Since the average overhaul interval is approximately 15,000 flight hours, it is conservative to assume that no overhauls would occur within one year of manufacture.) Boeing indicates that only serial numbers prior to 1252A (for the rudder PCU) and those prior to 5360A (for the aileron/elevator PCU) would need to be inspected. In addition, Boeing recommends that any aileron/elevator actuators having a part number that includes an ''ss'' should be eliminated from the applicability of the proposal since those PCU's have a steel sleeve (i.e., those PCU's could not have chrome plating on aluminum).

One commenter states that the proposed rule should include an exemption for PCU's that have been inspected previously and found to have no chrome, or units on which the steel sleeve repair has been incorporated.

The FAA concurs that the applicability of the final rule should be revised. At the time the proposal was issued, the part and serial numbers of PCU's that have been overhauled or repaired were not available; therefore, the FAA was unable to include them in the applicability of the proposal. However, Boeing has provided this information in its comments to the proposed rule. The FAA has revised the applicability of the final rule by specifying the part and serial numbers of affected PCU's. In effect, such revision limits the applicability of this AD to those PCU's manufactured prior to June 1984, and specifically excludes those aileron and elevator PCU's having a part number that contains an ''ss'' (i.e., those that have been reworked with a steel sleeve). In addition, paragraph (a) of the final rule has been revised to specify the part and serial numbers of affected PCU's.

As for allowing a records search to confirm that no chrome plate repairs to the bore have been accomplished, the FAA finds that no change to the final rule is necessary. The applicability of this final rule specifies that the AD applies only to certain Model 737 series airplanes that are equipped with an aileron, elevator, or rudder PCU having a particular part and serial number. This AD does not preclude an operator from performing a records search to determine if an airplane in its fleet is subject to the requirements of this AD.

**Request To Limit Applicability of Proposal to Rudder PCU's**

One commenter requests that the requirements of the proposal be limited to rudder PCU's only, rather than

aileron, elevator, and rudder PCU's. The commenter states that the adoption of the proposed rule would overburden existing competent repair facilities and would expose the airlines and the public to a hazardous condition far greater than any condition that exists presently from the identified unsafe condition. This commenter believes the proposal implies that a simple inspection can determine the status of chrome plated bores on the affected units; however, the commenter indicates that, due to the fact that the chrome sleeving process was used in both manufacturing and repair of the units, that implication is incorrect. The commenter states that limiting the inspection to rudder PCU's—especially those manufactured before chrome sleeving was discontinued—would reduce the risk of unintended consequences resulting from the overburdening of competent repair facilities.

The FAA does not agree that the applicability of the AD should be revised to include only rudder PCU's. The FAA has determined that sluggish ailerons and elevators pose a potential unsafe condition similar to that of the rudder. Therefore, the FAA finds that it is appropriate to address this potential unsafe condition as it applies to aileron and elevator PCU's, as well as rudder PCU's.

**Requests To Extend Compliance Time**

The ATA, on behalf of several of its members, requests that the proposed compliance time be extended from 18 months to at least five years.

One ATA member states that it would be physically impossible and unnecessary for operators to accomplish the required actions within the proposed compliance time of 18 months. This commenter indicates that a review of its maintenance records for the past 15 years showed that it has never repaired either an aileron or rudder cylinder due to a worn bore.

One ATA member states that it is important that ample time be provided to accomplish the intent of the proposal because such accomplishment requires the removal of PCU's from airplanes and partial disassembly of PCU's in order to determine the type of rework of the cylinder bore, which requires scheduling, airplane downtime, unit turnaround time, and availability of spare PCU's. Another ATA member states that removal of all PCU's would require industry to process almost 750 PCU's per month for the next 18 months.

One commenter asks that the compliance time be extended to the next shop overhaul in light of the fact that there is no documented unsafe condition or in-service concern.

Boeing suggests an extension of the compliance time to five years or 15,000 flight hours so that the majority of PCU's can be inspected as a part of normal maintenance actions. Boeing adds that the possibility of maintenance errors during PCU replacement will result in a net degradation in airplane safety as a result of the inspection schedule established by the proposed rule.

The FAA concurs with the commenters' requests to extend the compliance time. In light of the information presented by the commenters, the FAA finds that extending the compliance time to within five years or 15,000 flight hours after the effective date of the AD, or at the next time the PCU is sent to a repair facility (whichever of these times occurs first), will not adversely affect safety. In addition, this revised compliance time will allow the inspection to be performed at a base during regularly scheduled maintenance where special equipment and trained maintenance personnel will be available if necessary. Paragraph (a) of the final rule has been revised to specify this revised compliance time.

**Request To Revise Cost Impact Information**

Two commenters believe that the cost impact information presented in the proposal has been underestimated greatly, and that the proposal places an unreasonable financial burden on operators.

One of these commenters indicates that the inspection of the PCU cylinder bores requires removal of PCU's from the airplane and disassembly of those units. The commenter presents the following cost estimates:

- 28 work hours for removal and reinstallation of five PCU's per airplane;
- 20 work hours (per PCU) for disassembly, inspection, assembly, and testing; and
- $1,100 (per PCU) for parts required for reassembly of the units after inspection. Using these figures, the commenter estimates the cost impact on U.S. operators to be approximately $14.3 million, or $13,180 per airplane.

The other commenter states that the proposal does not account for any return-to-service checks after the units have been changed, overhaul costs once the units are in the shop, or costs of frequent repetitive checks and short compliance periods for changing the units.

The FAA infers from these remarks that the commenters request the cost impact information, below, be revised.

The FAA does not concur. The cost impact information, below, describes only the ''direct'' costs of the specific actions required by this AD. The number of work hours necessary to accomplish the required action (i.e., the inspection), specified as 5 in the cost impact information, was provided to the FAA by the manufacturer based on the best data available to date. This number represents the time necessary to perform only the action (inspection) that is actually required by this AD. The FAA recognizes that, in accomplishing the requirements of any AD, operators may incur ''incidental'' costs in addition to the ''direct'' costs. The cost analysis in AD rulemaking actions, however, typically does not include incidental costs, such as the time required to gain access and close up; planning time; or time necessitated by other administrative actions. Because incidental costs may vary significantly from operator to operator, they are almost impossible to calculate.

Additionally, the revised compliance time presented in this AD should coincide with normal overhaul schedules (within 5 years or 15,000 flight hours). The FAA estimates that the PCU inspections (and any ''on condition'' replacements) will be accomplished during normal overhauls, which will minimize the economic impact on operators and accomplish the safety objectives addressed in this AD.

**Request To Clarify Inspection of Reworked or Overhauled PCU's**

One commenter requests that the FAA revise the proposal to clarify that only reworked or overhauled PCU's must be inspected. The commenter suggests the following wording for the Summary section of the preamble to the proposal: ''* * * This proposal would require an inspection of reworked aileron/elevator PCU's and rudder PCU's to determine * * *.'' The commenter asks that paragraph (a) of the proposal be revised to state clearly that ''reworked'' or ''overhauled'' PCU's must be inspected. The commenter considers that foreign operators and airworthiness authorities may misinterpret the intent of this AD as proposed.

The FAA concurs with the commenter's request. The intent of this final rule is that operators inspect only reworked or overhauled PCU's to determine if chrome plating is applied in the cylinder bores. The Summary section of the preamble to the final rule has been revised to clarify this intent. Additionally, paragraph (a) of the final

rule has been revised to specify that only reworked or overhauled PCU's must be inspected.

**Request To Address Cause of Chrome Plating Separation**

One commenter contends that chrome plating on aluminum is successful (the component will have the required integrity for airworthiness) when the base metal has been subjected to the proper pretreatment (cleaned), proper chrome plating, and properly executed post plating operations such as finish grinding and nondestructive testing. The commenter states that poor maintenance techniques, environmental factors, or overlooked design parameters present a more relevant and detrimental concern to flight safety than a properly applied chrome on aluminum repair. The commenter believes that removal of the chrome repair is treating the effect without fully understanding the cause and addressing the underlying issues.

The FAA infers from these remarks that the commenter requests that the FAA address the cause for chrome plating separation, rather than remove the chrome plating repair as an option.

The FAA agrees that if the repair is done properly, it could provide satisfactory service. In any event, the FAA is aware of instances of failure of the repair. The FAA finds that issuance of this AD is necessary to ensure that all chrome plating repairs are removed from the affected Model 737 fleet so that an acceptable level of safety for these airplanes is attained. However, the FAA would consider a request for approval of an alternative method of compliance, provided that a satisfactory repeatable repair procedure using chrome plating can be developed.

**Request To Revise Preamble of Proposal**

Boeing requests that the wording of the ''Reports Received by FAA'' section of the preamble to the proposed rule be revised. The commenter notes that this section of the preamble states that chrome plating chips could block or jam the rudder PCU control valve and thereby cause partial or full rudder deflection. Boeing indicates that this statement is incorrect. Boeing remarks that testing conducted by the NTSB systems group showed that a chrome chip in the control valve could be sheared by a force of six pounds. This force would be provided by the rudder feel and centering unit (in combination with system friction) before any significant rudder deflected had occurred.

The commenter also states that this section of the preamble refers only to the rudder PCU, but also should refer to the aileron and elevator PCU's.

The FAA concurs with the remarks submitted by the commenter. However, the section of the preamble to the proposed rule referenced by the commenter does not reappear in this final rule. Therefore, no change to the final rule is necessary.

**Request To Correct PCU Part Number**

One commenter requests that the part number referenced in the proposal for the rudder PCU be corrected to 65–44861. The FAA concurs with this request. The FAA has revised paragraphs (a) and (c) of this final rule to correct this inadvertent typographical error.

**Conclusion**

After careful review of the available data, including the comments noted above, the FAA has determined that air safety and the public interest require the adoption of the rule with the changes previously described. The FAA has determined that these changes will neither increase the economic burden on any operator nor increase the scope of the AD.

**Cost Impact**

There are approximately 2,675 Model 737 series airplanes of the affected design in the worldwide fleet. The FAA estimates that 1,091 airplanes of U.S. registry will be affected by this AD, that it will take approximately 5 work hours per airplane to accomplish the required inspection, and that the average labor rate is $60 per work hour. Based on these figures, the cost impact of the AD on U.S. operators is estimated to be $327,300, or $300 per airplane.

The cost impact figure discussed above is based on assumptions that no operator has yet accomplished any of the requirements of this AD action, and that no operator would accomplish those actions in the future if this AD were not adopted.

Should an operator be required to accomplish the necessary replacement, it would take approximately 18 work hours per airplane to accomplish, at an average labor rate of $60 per work hour. Required parts will cost approximately $15,800 per airplane. Based on these figures, the cost impact of any necessary replacement action is estimated to be $16,880 per airplane.

**Regulatory Impact**

The regulations adopted herein will not have substantial direct effects on the States, on the relationship between the national government and the States, or on the distribution of power and responsibilities among the various levels of government. Therefore, in accordance with Executive Order 12612, it is determined that this final rule does not have sufficient federalism implications to warrant the preparation of a Federalism Assessment.

For the reasons discussed above, I certify that this action (1) is not a ''significant regulatory action'' under Executive Order 12866; (2) is not a ''significant rule'' under DOT Regulatory Policies and Procedures (44 FR 11034, February 26, 1979); and (3) will not have a significant economic impact, positive or negative, on a substantial number of small entities under the criteria of the Regulatory Flexibility Act. A final evaluation has been prepared for this action and it is contained in the Rules Docket. A copy of it may be obtained from the Rules Docket at the location provided under the caption **ADDRESSES**.

**List of Subjects in 14 CFR Part 39**

Air transportation, Aircraft, Aviation safety, Incorporation by reference, Safety.

**Adoption of the Amendment**

Accordingly, pursuant to the authority delegated to me by the Administrator, the Federal Aviation Administration amends part 39 of the Federal Aviation Regulations (14 CFR part 39) as follows:

## PART 39—AIRWORTHINESS DIRECTIVES

1. The authority citation for part 39 continues to read as follows:

**Authority:** 49 U.S.C. 106(g), 40113, 44701.

**§ 39.13 [Amended]**

2. Section 39.13 is amended by adding the following new airworthiness directive:

**97–09–14 Boeing:** Amendment 39–10010. Docket 96–NM–150–AD.

*Applicability:* Model 737–100, –200, –300, –400, and –500 series airplanes equipped with a rudder power control unit (PCU) having part number (P/N) 65–44861–( ) and a serial number less than 1252A; or an aileron or elevator PCU having P/N 65–44761–( ) (except those having P/N's that contain an ''ss'') and a serial number less than 5360A; certificated in any category.

**Note 1:** This AD applies to each airplane identified in the preceding applicability provision, regardless of whether it has been otherwise modified, altered, or repaired in the area subject to the requirements of this AD. For airplanes that have been modified, altered, or repaired so that the performance of the requirements of this AD is affected, the owner/operator must request approval for an alternative method of compliance in

accordance with paragraph (d) of this AD. The request should include an assessment of the effect of the modification, alteration, or repair on the unsafe condition addressed by this AD; and, if the unsafe condition has not been eliminated, the request should include specific proposed actions to address it.

*Compliance:* Required as indicated, unless accomplished previously.

To prevent a reduced rate of movement of the elevator, aileron, or rudder, which, if not corrected, could result in reduced controllability of the airplane, accomplish the following:

(a) Perform an inspection of reworked or overhauled aileron and elevator PCU's having P/N 65–44761–( ) (except those having P/N's that contain an ''ss'') and a serial number less than 5360A; and rudder PCU's having part number (P/N) 65–44861–( ) and a serial number less than 1252A; to determine if reworked PCU manifold cylinder bores containing chrome plating are installed, in accordance with Boeing Service Letter 737–SL–27–30, dated April 1, 1985. Accomplish the inspection at the earlier of the times specified in paragraphs (a)(1) and (a)(2) of this AD.

(1) Within 5 years or 15,000 flight hours after the effective date of this AD, whichever occurs first.

(2) At the next time the PCU is sent to a repair facility.

(b) If any reworked PCU manifold cylinder bores containing chrome plating are installed: Prior to further flight, replace the cylinder bores with bores that have been reworked using the oversize method or the steel sleeve method specified in Boeing Service Letter 737–SL–27–30, dated April 1, 1985. Accomplish the replacement in accordance with the service letter.

(c) As of the effective date of this AD, no person shall install a reworked PCU manifold cylinder bore containing chrome plating on an aileron or elevator PCU having P/N 65–44761–( ), or on a rudder PCU having P/N 65–44861–( ), of any airplane unless the cylinder bore has been reworked using the oversize method or the steel sleeve method specified in Boeing Service Letter 737–SL–27–30, dated April 1, 1985.

(d) An alternative method of compliance or adjustment of the compliance time that provides an acceptable level of safety may be used if approved by the Manager, Seattle Aircraft Certification Office (ACO), FAA, Transport Airplane Directorate. Operators shall submit their requests through an appropriate FAA Principal Maintenance Inspector, who may add comments and then send it to the Manager, Seattle ACO.

**Note 2:** Information concerning the existence of approved alternative methods of compliance with this AD, if any, may be obtained from the Seattle ACO.

(e) Special flight permits may be issued in accordance with sections 21.197 and 21.199 of the Federal Aviation Regulations (14 CFR 21.197 and 21.199) to operate the airplane to a location where the requirements of this AD can be accomplished.

(f) The inspection and repair shall be done in accordance with Boeing Service Letter 737–SL–27–30, dated April 1, 1985. This incorporation by reference was approved by the Director of the Federal Register in accordance with 5 U.S.C. 552(a) and 1 CFR part 51. Copies may be obtained from Boeing Commercial Airplane Group, P.O. Box 3707, Seattle, Washington 98124–2207. Copies may be inspected at the FAA, Transport Airplane Directorate, 1601 Lind Avenue, SW., Renton, Washington; or at the Office of the Federal Register, 800 North Capitol Street, NW., suite 700, Washington, DC.

(g) This amendment becomes effective on June 6, 1997.

Issued in Renton, Washington, on April 24, 1997.

**Darrell M. Pederson,**

*Acting Manager, Transport Airplane Directorate, Aircraft Certification Service.*

[FR Doc. 97–11200 Filed 5–1–97; 8:45 am]

BILLING CODE 4910–13–U

---

## DEPARTMENT OF TRANSPORTATION

## Federal Aviation Administration

## 14 CFR Part 39

**[Docket No. 96–NM–190–AD; Amendment 39–10008; AD 97–09–12]**

**RIN 2120–AA64**

## Airworthiness Directives; Raytheon Model DH 125–1A, –3A, and –400A Series Airplanes

**AGENCY:** Federal Aviation Administration, DOT.

**ACTION:** Final rule.

**SUMMARY:** This amendment adopts a new airworthiness directive (AD), applicable to all Raytheon Model DH 125–1A, –3A, and –400A series airplanes, that requires a one-time inspection to detect scoring of the upper fuselage skin around the periphery of the cockpit canopy blister interface, and repair, if necessary. This amendment is prompted by reports indicating that scoring of the upper fuselage skin had been detected in that area. The actions specified by this AD are intended to detect and correct scoring of the upper fuselage skin around the periphery of the cockpit canopy blister interface, which could result in reduced structural integrity of the fuselage, and consequent cabin depressurization.

**DATES:** Effective June 6, 1997.

The incorporation by reference of certain publications listed in the regulations is approved by the Director of the Federal Register as of June 6, 1997.

**ADDRESSES:** The service information referenced in this AD may be obtained from Raytheon Aircraft Company, Commercial Service Department, P.O. Box 85, Wichita, Kansas 67201–0085. This information may be examined at the Federal Aviation Administration (FAA), Transport Airplane Directorate, Rules Docket, 1601 Lind Avenue, SW., Renton, Washington; or at the FAA, Wichita Aircraft Certification Office, Small Airplane Directorate, 1801 Airport Road, Room 100, Mid-Continent Airport, Wichita, Kansas; or at the Office of the Federal Register, 800 North Capitol Street, NW., suite 700, Washington, DC.

**FOR FURTHER INFORMATION CONTACT:** Larry Engler, Aerospace Engineer, Airframe Branch, ACE–120W, FAA, Small Airplane Directorate, Wichita Aircraft Certification Office, 1801 Airport Road, Room 100, Mid-Continent Airport, Wichita, Kansas 67209; telephone (316) 946–4122; fax (316) 946–4407.

**SUPPLEMENTARY INFORMATION:** A proposal to amend part 39 of the Federal Aviation Regulations (14 CFR part 39) to include an airworthiness directive (AD) that is applicable to all Raytheon Model DH 125–1A, –3A, and –400A series airplanes was published in the **Federal Register** on February 20, 1997 (62 FR 7731). That action proposed to require a one-time detailed visual inspection to detect scoring of the upper fuselage skin around the periphery of the cockpit canopy blister interface, and repair, if necessary.

Interested persons have been afforded an opportunity to participate in the making of this amendment. No comments were submitted in response to the proposal or the FAA's determination of the cost to the public.

### Conclusion

The FAA has determined that air safety and the public interest require the adoption of the rule as proposed.

### Cost Impact

There are approximately 200 Model DH 125–1A, –3A, and –400A series airplanes of the affected design in the worldwide fleet. The FAA estimates that 115 airplanes of U.S. registry will be affected by this AD, that it will take approximately 4 work hours per airplane to accomplish the required actions, and that the average labor rate is $60 per work hour. Based on these figures, the cost impact of the AD on U.S. operators is estimated to be $27,600, or $240 per airplane.

The cost impact figure discussed above is based on assumptions that no operator has yet accomplished any of the requirements of this AD action, and that no operator would accomplish those actions in the future if this AD were not adopted.

## Regulatory Impact

The regulations adopted herein will not have substantial direct effects on the States, on the relationship between the national government and the States, or on the distribution of power and responsibilities among the various levels of government. Therefore, in accordance with Executive Order 12612, it is determined that this final rule does not have sufficient federalism implications to warrant the preparation of a Federalism Assessment.

For the reasons discussed above, I certify that this action (1) is not a ''significant regulatory action'' under Executive Order 12866; (2) is not a ''significant rule'' under DOT Regulatory Policies and Procedures (44 FR 11034, February 26, 1979); and (3) will not have a significant economic impact, positive or negative, on a substantial number of small entities under the criteria of the Regulatory Flexibility Act. A final evaluation has been prepared for this action and it is contained in the Rules Docket. A copy of it may be obtained from the Rules Docket at the location provided under the caption **ADDRESSES.**

## List of Subjects in 14 CFR Part 39

Air transportation, Aircraft, Aviation safety, Incorporation by reference, Safety.

## Adoption of the Amendment

Accordingly, pursuant to the authority delegated to me by the Administrator, the Federal Aviation Administration amends part 39 of the Federal Aviation Regulations (14 CFR part 39) as follows:

## PART 39—AIRWORTHINESS DIRECTIVES

1. The authority citation for part 39 continues to read as follows:

**Authority:** 49 U.S.C. 106(g), 40113, 44701.

### § 39.13 [Amended]

2. Section 39.13 is amended by adding the following new airworthiness directive:

**97–09–12 Raytheon Aircraft Company (Formerly Beech, Raytheon Corporate Jets, British Aerospace, Hawker Siddeley, et al.):** Amendment 39–10008. Docket 96–NM–190–AD.

*Applicability:* All Model DH 125–1A, –3A, and –400 series airplanes, certificated in any category.

**Note 1:** This AD applies to each airplane identified in the preceding applicability provision, regardless of whether it has been modified, altered, or repaired in the area subject to the requirements of this AD. For airplanes that have been modified, altered, or repaired so that the performance of the requirements of this AD is affected, the owner/operator must request approval for an alternative method of compliance in accordance with paragraph (d) of this AD. The request should include an assessment of the effect of the modification, alteration, or repair on the unsafe condition addressed by this AD; and, if the unsafe condition has not been eliminated, the request should include specific proposed actions to address it.

**Note 2:** Raytheon Model DH 125–1B, –3B, and –400B series airplanes are similar in design to the airplanes that are subject to the requirements of this AD and, therefore, also may be subject to the unsafe condition addressed by this AD. However, as of the effective date of this AD, those models are not type certificated for operation in the United States. Airworthiness authorities of countries in which the Model DH 125–1B, –3B, and –400B series airplanes are approved for operation should consider adopting corrective action, applicable to those models, that is similar to the corrective action required by this AD.

*Compliance:* Required as indicated, unless accomplished previously.

To detect and correct scoring of the upper fuselage skin around the periphery of the cockpit canopy blister interface, which could result in reduced structural integrity of the fuselage skin, and consequent cabin depressurization; accomplish the following:

(a) Within 90 days after the effective date of this AD, perform a one-time detailed visual inspection to detect scoring of the upper fuselage skin around the periphery of the cockpit canopy blister interface, in accordance with Raytheon Aircraft Service Bulletin SB.53–93, dated May 16, 1996.

(b) If no scoring is detected during the inspection required by paragraph (a) of this AD, no further action is required by this AD.

(c) If any scoring is detected during the inspection required by paragraph (a) of this AD, prior to further flight, determine the maximum location and details of each score, including the edge distance and material thickness, in accordance with Raytheon Aircraft Service Bulletin SB.53–93, dated May 16, 1996.

(1) If any scoring is found that is within the limits specified in the service bulletin, prior to further flight, repair in accordance with the service bulletin.

(2) If any scoring is found that is outside the limits specified in the service bulletin, prior to further flight, repair in accordance with a method approved by the Manager, Wichita Aircraft Certification Office (ACO), FAA, Small Airplane Directorate.

(d) An alternative method of compliance or adjustment of the compliance time that provides an acceptable level of safety may be used if approved by the Manager, Wichita ACO. Operators shall submit their requests through an appropriate FAA Principal Maintenance Inspector, who may add comments and then send it to the Manager, Wichita ACO.

**Note 3:** Information concerning the existence of approved alternative methods of compliance with this AD, if any, may be obtained from the Wichita ACO.

(e) Special flight permits may be issued in accordance with sections 21.197 and 21.199 of the Federal Aviation Regulations (14 CFR 21.197 and 21.199) to operate the airplane to a location where the requirements of this AD can be accomplished.

(f) The actions shall be done in accordance with Raytheon Aircraft Service Bulletin SB.53–93, dated May 16, 1996. This incorporation by reference was approved by the Director of the Federal Register in accordance with 5 U.S.C. 552(a) and 1 CFR part 51. Copies may be obtained from Raytheon Aircraft Company, Commercial Service Department, P.O. Box 85, Wichita, Kansas 67201–0085. Copies may be inspected at the FAA, Transport Airplane Directorate, 1601 Lind Avenue, SW., Renton, Washington; or at the FAA, Wichita Aircraft Certification Office, Small Airplane Directorate, 1801 Airport Road, Room 100, Mid-Continent Airport, Wichita, Kansas; or at the Office of the Federal Register, 800 North Capitol Street, NW., suite 700, Washington, DC.

(g) This amendment becomes effective on June 6, 1997.

Issued in Renton, Washington, on April 24, 1997.

**Neil D. Schalekamp,**

*Acting Manager, Transport Airplane Directorate, Aircraft Certification Service.*

[FR Doc. 97–11198 Filed 5–1–97; 8:45 am]

BILLING CODE 4910–13–U

---

## DEPARTMENT OF TRANSPORTATION

## Federal Aviation Administration

## 14 CFR Part 39

**[Docket No. 96–CE–11–AD; Amendment 39–9963; AD 97–06–06]**

**RIN 2120–AA64**

## Airworthiness Directives; Raytheon Aircraft Company 90, 99, 100, 200, and 1900 Series Airplanes; Correction

**AGENCY:** Federal Aviation Administration, DOT.

**ACTION:** Final rule; correction.

**SUMMARY:** This document makes a correction to Airworthiness Directive (AD) 97–06–06, which was published in the **Federal Register** on March 13, 1997 (62 FR 11764), and concerns Raytheon Aircraft Company (Raytheon) 90, 99, 100, 200, and 1900 series airplanes (formerly referred to as Beech 90, 99, 100, 200, and 1900 series airplanes). This AD currently has two paragraph (f)'s. The AD currently requires inspecting the pilot and copilot chairs to ensure that the locking pins will fully engage in the seat tracks, and modifying any chair where the locking pin fails to fully engage or is misaligned. This action changes the second paragraph (f) to paragraph (g).

**EFFECTIVE DATE:** May 9, 1997.

**FOR FURTHER INFORMATION CONTACT:** Mr. Steve Potter, Aerospace Engineer, Wichita Aircraft Certification Office, FAA, 1801 Airport Road, Wichita, Kansas 67209; telephone (316) 946–4124; facsimile (316) 946–4407.

**SUPPLEMENTARY INFORMATION:**

## Discussion

On March 5, 1997, the FAA issued AD 97–06–06, Amendment 39–9963 (62 FR 11764, March 13, 1997), which applies to Raytheon 90, 99, 100, 200, and 1900 series airplanes (formerly referred to as Beech 90, 99, 100, 200, and 1900 series airplanes). This AD requires currently requires inspecting the pilot and copilot chairs to ensure that the locking pins will fully engage in the seat tracks, and modifying any chair where the locking pin fails to fully engage or is misaligned.

## Need for the Correction

This AD currently has two paragraph (f)'s. The second paragraph (f) gives the effective date of the AD and should be referenced as paragraph (g). As written, operators of Raytheon 90, 99, 100, 200, and 1900 series airplanes may inadvertently not notice or miss the second paragraph (f) of the AD because there was already one paragraph (f); thereby, missing the effective date of the AD.

## Correction of Publication

Accordingly, the publication of March 13, 1997 (62 FR 11764), of Amendment 39–9963; AD 97–06–06, which was the subject of FR Doc. 97–6255, is corrected as follows:

### § 39.13 [Corrected]

On page 11766, in the third column, § 39.13, in AD 97–06–06, the second paragraph (f) is correctly designated as paragraph (g).

Action is taken herein to correct this reference in AD 97–06–06 and to add this AD correction to section 39.13 of the Federal Aviation Regulations (14 CFR 39.13).

The effective date of the AD remains May 9, 1997.

Issued in Kansas City, Missouri on April 24, 1997.

**Larry A. Malir,**

*Acting Manager, Small Airplane Directorate, Aircraft Certification Service.*

[FR Doc. 97–11196 Filed 5–1–97; 8:45 am]

BILLING CODE 4910–13–U

## DEPARTMENT OF TRANSPORTATION

## Federal Aviation Administration

## 14 CFR Part 39

**[Docket No. 97–NM–66–AD; Amendment 39–10012; AD 97–08–51]**

**RIN 2120–AA64**

## Airworthiness Directives; Boeing Model 767 Series Airplanes

**AGENCY:** Federal Aviation Administration, DOT.

**ACTION:** Final rule; request for comments.

**SUMMARY:** This document publishes in the **Federal Register** an amendment adopting Airworthiness Directive (AD) T97–08–51 that was sent previously to all known U.S. owners and operators of Boeing Model 767 series airplanes by individual telegrams. This AD requires an inspection to ensure that all bolts of the hinge fitting assembly support beam on both the left-and right-hand outboard trailing edge flaps are the correct length and type, and correction of any discrepancy found. This action is prompted by a report indicating that a 20-foot section of the right-hand outboard trailing edge flap separated from the airplane due to failure of four bolts of the most inboard hinge fitting. The actions specified by this AD are intended to detect and correct such failed bolts, which could result in loss of an outboard trailing edge flap, and consequent reduced controllability of the airplane.

**DATES:** Effective May 7, 1997, to all persons except those persons to whom it was made immediately effective by telegraphic AD T97–08–51, issued on April 2, 1997, which contained the requirements of this amendment.

The incorporation by reference of certain publications listed in the regulations is approved by the Director of the Federal Register as of May 7, 1997.

Comments for inclusion in the Rules Docket must be received on or before July 1, 1997.

**ADDRESSES:** Submit comments in triplicate to the Federal Aviation Administration (FAA), Transport Airplane Directorate, ANM–103, Attention: Rules Docket No. 97–NM–66, 1601 Lind Avenue, SW., Renton, Washington 98055–4056.

The applicable service information may be obtained from Boeing Commercial Airplane Group, P.O. Box 3707, Seattle, Washington 98124–2207. This information may be examined at the FAA, Transport Airplane Directorate, 1601 Lind Avenue, SW., Renton, Washington; or at the Office of the Federal Register, 800 North Capitol Street, NW., suite 700, Washington, DC.

**FOR FURTHER INFORMATION CONTACT:** Todd Martin, Aerospace Engineer, Airframe Branch, ANM–120S, FAA, Seattle Aircraft Certification Office, 1601 Lind Avenue, SW., Renton, Washington; telephone (206) 227–2781; Fax (206) 227–1181.

**SUPPLEMENTARY INFORMATION:** On April 2, 1997, the FAA issued telegraphic AD T97–08–51, which is applicable to all Boeing Model 767 series airplanes.

That action was prompted by a report indicating that a 20-foot section of the right-hand outboard trailing edge flap separated from a Boeing Model 767 series airplane during approach for landing. During the approach, a ''spoiler up flaps 15'' configuration was used as part of a high descent rate approach, which is typically associated with high applied loads on the hinge fittings of the outboard trailing edge flap. Additionally, the numbers 9 and 12 spoilers were damaged, which suggests that, upon separation from the airplane, the flap hit the spoilers. Analysis of the flap structure revealed that four bolts of the most inboard hinge fitting had failed.

On-site investigation of the four failed bolts revealed that one bolt had been completely severed due to fatigue that occurred some time prior to the loss of the section of the flap. The investigation also revealed that two of the bolts had been partially severed (roughly 20–30 percent of the bolt diameter), and that one bolt failed from static overload.

Failure of the bolts, if not detected and corrected, could result in loss of an outboard trailing edge flap, and consequent reduced controllability of the airplane.

## Explanation of Relevant Service Information

The FAA has reviewed and approved Boeing Alert Service Bulletin 767–27A0151, Revision 1, dated April 2, 1997, which describes procedures for the following actions:

- Performing a torque check inspection to ensure that all bolts of the hinge fitting assembly support beam on both the left-and right-hand outboard trailing edge flaps are within specified torque range;
- An inspection to verify the bolt length and type of all the bolts of both hinge fittings, and correction of any discrepancy found;
- Replacing all six assembly bolts with new or serviceable bolts, or performing a dye penetrant inspection

to detect cracking and/or discrepancies of any bolt that is below the threshold of the torque check;

- Replacing any cracked or damaged bolt with a new or serviceable bolt; and
- Performing an inspection to ensure that shims are installed, and an inspection to ensure that the radius filler is correctly installed.

### Explanation of Requirements of the Rule

Since the unsafe condition described is likely to exist or develop on other airplanes of the same type design, the FAA issued Telegraphic AD T97–08–51 to prevent separation of the outboard trailing edge flap due to failed bolts of the hinge fitting. The AD requires an inspection to ensure that all bolts of the hinge fitting assembly support beam on both the left-and right-hand outboard trailing edge flaps are within specified torque range. Additionally, this AD requires an inspection to ensure that all bolts of the hinge fitting assembly support beam on both the left-and right-hand outboard trailing edge flaps are the correct length and type, and correction of any discrepancy found. For any bolt that is outside the specified torque range, this AD requires either replacing all six bolts of the hinge fitting assembly with new or serviceable bolts, or performing a dye penetrant inspection to detect cracking or discrepancies of the bolts. For airplanes on which any cracked or discrepant bolt is found, this AD requires replacement of the bolt with a new or serviceable bolt.

The actions are required to be accomplished in accordance with the alert service bulletin previously described.

Since it was found that immediate corrective action was required, notice and opportunity for prior public comment thereon were impracticable and contrary to the public interest, and good cause existed to make the AD effective immediately by individual telegrams issued on April 2, 1997, to all known U.S. owners and operators of Boeing Model 767 series airplanes. These conditions still exist, and the AD is hereby published in the **Federal Register** as an amendment to section 39.13 of the Federal Aviation Regulations (14 CFR 39.13) to make it effective to all persons.

### Comments Invited

Although this action is in the form of a final rule that involves requirements affecting flight safety and, thus, was not preceded by notice and an opportunity for public comment, comments are invited on this rule. Interested persons are invited to comment on this rule by submitting such written data, views, or arguments as they may desire. Communications shall identify the Rules Docket number and be submitted in triplicate to the address specified under the caption **ADDRESSES**. All communications received on or before the closing date for comments will be considered, and this rule may be amended in light of the comments received. Factual information that supports the commenter's ideas and suggestions is extremely helpful in evaluating the effectiveness of the AD action and determining whether additional rulemaking action would be needed.

Comments are specifically invited on the overall regulatory, economic, environmental, and energy aspects of the rule that might suggest a need to modify the rule. All comments submitted will be available, both before and after the closing date for comments, in the Rules Docket for examination by interested persons. A report that summarizes each FAA-public contact concerned with the substance of this AD will be filed in the Rules Docket.

Commenters wishing the FAA to acknowledge receipt of their comments submitted in response to this rule must submit a self-addressed, stamped postcard on which the following statement is made: ''Comments to Docket Number 97–NM–66–AD.'' The postcard will be date stamped and returned to the commenter.

### Regulatory Impact

The regulations adopted herein will not have substantial direct effects on the States, on the relationship between the national government and the States, or on the distribution of power and responsibilities among the various levels of government. Therefore, in accordance with Executive Order 12612, it is determined that this final rule does not have sufficient federalism implications to warrant the preparation of a Federalism Assessment.

The FAA has determined that this regulation is an emergency regulation that must be issued immediately to correct an unsafe condition in aircraft, and that it is not a ''significant regulatory action'' under Executive Order 12866. It has been determined further that this action involves an emergency regulation under DOT Regulatory Policies and Procedures (44 FR 11034, February 26, 1979). If it is determined that this emergency regulation otherwise would be significant under DOT Regulatory Policies and Procedures, a final regulatory evaluation will be prepared and placed in the Rules Docket. A copy of it, if filed, may be obtained from the Rules Docket at the location provided under the caption **ADDRESSES**.

### List of Subjects in 14 CFR Part 39

Air transportation, Aircraft, Aviation safety, Incorporation by reference, Safety.

### Adoption of the Amendment

Accordingly, pursuant to the authority delegated to me by the Administrator, the Federal Aviation Administration amends part 39 of the Federal Aviation Regulations (14 CFR part 39) as follows:

## PART 39—AIRWORTHINESS DIRECTIVES

1. The authority citation for part 39 continues to read as follows:

**Authority:** 49 U.S.C. 106(g), 40113, 44701.

### §39.13 [Amended]

2. Section 39.13 is amended by adding the following new airworthiness directive:

**97–08–51 Boeing:** Amendment 39–10012. Docket 97–NM–66–AD.

*Applicability:* Model 767 series airplanes, certificated in any category.

**Note 1:** This AD applies to each airplane identified in the preceding applicability provision, regardless of whether it has been modified, altered, or repaired in the area subject to the requirements of this AD. For airplanes that have been modified, altered, or repaired so that the performance of the requirements of this AD is affected, the owner/operator must request approval for an alternative method of compliance in accordance with paragraph (e) of this AD. The request should include an assessment of the effect of the modification, alteration, or repair on the unsafe condition addressed by this AD; and, if the unsafe condition has not been eliminated, the request should include specific proposed actions to address it.

*Compliance:* Required as indicated, unless accomplished previously.

To prevent separation of the outboard trailing edge flap from the airplane due to failed bolts of the attach fitting, accomplish the following:

(a) Perform an inspection to check the bolt torque, bolt length, and type of all bolts of both hinge fittings on the left-and right-hand outboard trailing edge flaps, in accordance with Boeing Alert Service Bulletin 767–27A0151, Revision 1, dated

April 2, 1997. Perform these inspections at the time specified in paragraph (a)(1) or (a)(2) of this AD, as applicable.

(1) For airplanes that have accumulated 15,000 total flight cycles or more, or 37,500 total flight hours or more, as of the effective date of this AD: Perform the inspections within 15 days after the effective date of this AD.

(2) For all other airplanes: Perform the inspections at the later of the times specified

in paragraphs (a)(2)(i) and (a)(2)(ii) of this AD.

(i) Prior to the accumulation of 10,000 total flight cycles, or 25,000 total flight hours, whichever occurs first.

(ii) Within 30 days after the effective date of this AD.

(b) If any bolt of the hinge fittings of the left-and right-hand outboard trailing edge flaps is below the torque check threshold specified in Boeing Alert Service Bulletin 767–27A0151, Revision 1, dated April 2, 1997: Prior to further flight, accomplish the action specified in paragraph (b)(1) or (b)(2) of this AD in accordance with the alert service bulletin.

(1) Perform a dye penetrant inspection of all the bolts of the hinge fitting to detect any cracking or discrepancy.

(i) If no cracking or discrepancy is detected, reinstall the bolt using new nuts and washers.

(ii) If any cracking or discrepancy is detected, replace the cracked or discrepant bolt with a new or serviceable bolt.

(2) Replace all of the bolts of both hinge fittings with new or serviceable bolts.

(c) If the length or type of any bolt of the hinge fittings of the left-and right-hand outboard trailing edge flaps is outside the specifications of Boeing Alert Service Bulletin 767–27A0151, Revision 1, dated April 2, 1997: Prior to further flight, replace the bolt with a new or serviceable bolt in accordance with the alert service bulletin.

(d) Within 10 days after accomplishing the actions required by this AD, submit a report describing any cracking, damage, or any torque check of any bolt of either hinge fitting that was below the threshold of the torque check specified by this AD, to the Manager, Seattle Aircraft Certification Office (ACO), 1601 Lind Avenue, SW., Renton, Washington 98055–4056; fax (206) 227–1181. Information collection requirements contained in this regulation have been approved by the Office of Management and Budget (OMB) under the provisions of the Paperwork Reduction Act of 1980 (44 U.S.C. 3501 *et seq.*) and have been assigned OMB Control Number 2120–0056.

(e) An alternative method of compliance or adjustment of the compliance time that provides an acceptable level of safety may be used if approved by the Manager, Seattle Aircraft Certification Office (ACO), FAA, Transport Airplane Directorate. Operators shall submit their requests through an appropriate FAA Principal Maintenance Inspector, who may add comments and then send it to the Manager, Seattle ACO.

**Note 2:** Information concerning the existence of approved alternative methods of compliance with this AD, if any, may be obtained from the Seattle ACO.

(f) Special flight permits may be issued in accordance with sections 21.197 and 21.199 of the Federal Aviation Regulations (14 CFR 21.197 and 21.199) to operate the airplane to a location where the requirements of this AD can be accomplished.

(g) The actions shall be done in accordance with Boeing Alert Service Bulletin 767–27A0151, Revision 1, dated April 2, 1997. This incorporation by reference was approved by the Director of the Federal Register in accordance with 5 U.S.C. 552(a) and 1 CFR part 51. Copies may be obtained from Boeing Commercial Airplane Group, P.O. Box 3707, Seattle, Washington 98124–2207. Copies may be inspected at the FAA, ransport Airplane Directorate, 1601 Lind Avenue, SW., Renton, Washington; or at the Office of the Federal Register, 800 North Capitol Street, NW., suite 700, Washington, DC.

(h) This amendment becomes effective on May 7, 1997, to all persons except those persons to whom it was made immediately effective by telegraphic AD T97–08–51, issued on April 2, 1997, which contained the requirements of this amendment.

Issued in Renton, Washington, on April 25, 1997.

**Neil D. Schalekamp,**

*Acting Manager, Transport Airplane Directorate, Aircraft Certification Service.*

[FR Doc. 97–11334 Filed 5–1–97; 8:45 am]

BILLING CODE 4910–13–U

---

## DEPARTMENT OF TRANSPORTATION

## Federal Aviation Administration

## 14 CFR Part 39

**[Docket No. 96–NM–100–AD; Amendment 39–10006; AD 97–09–10]**

**RIN 2120–AA64**

## Airworthiness Directives; Jetstream Model BAe ATP Series Airplanes

**AGENCY:** Federal Aviation Administration, DOT.

**ACTION:** Final rule.

**SUMMARY:** This amendment adopts a new airworthiness directive (AD), applicable to certain Jetstream Model BAe ATP series airplanes, that requires modification of certain parts in the elevator flight control system and the propeller switch warning system. This amendment is prompted by a report indicating that these parts could interfere with the proper operation of these systems. The actions specified by this AD are intended to prevent the flight crew from having to engage the standby elevator control system in order to regulate the pitch of the airplane; and to prevent malfunctioning of the pitch warning system for the propellers; either of which could lead to reduced controllability of the airplane.

**DATES:** Effective June 6, 1997.

The incorporation by reference of certain publications listed in the regulations is approved by the Director of the Federal Register as of June 6, 1997.

**ADDRESSES:** The service information referenced in this AD may be obtained from Jetstream Aircraft, Inc., P.O. Box 16029, Dulles International Airport, Washington, DC 20041–6029. This information may be examined at the Federal Aviation Administration (FAA), Transport Airplane Directorate, Rules Docket, 1601 Lind Avenue, SW., Renton, Washington; or at the Office of the Federal Register, 800 North Capitol Street, NW., suite 700, Washington, DC.

**FOR FURTHER INFORMATION CONTACT:** William Schroeder, Aerospace Engineer, Standardization Branch, ANM–113, FAA, Transport Airplane Directorate, 1601 Lind Avenue, SW., Renton, Washington 98055–4056; telephone (206) 227–2148; fax (206) 227–1149.

**SUPPLEMENTARY INFORMATION:** A proposal to amend part 39 of the Federal Aviation Regulations (14 CFR part 39) to include an airworthiness directive (AD) that is applicable to certain Jetstream Model BAe ATP series airplanes was published in the **Federal Register** on January 8, 1997 (62 FR 1061). That action proposed to require modification of the stop lever for the bellcrank assembly of the elevator flight control system. That action also proposed to require that retaining cords on the access panels to the powerplant microswitches be removed from airplanes on which Jetstream Modification 35205A has been installed previously.

Interested persons have been afforded an opportunity to participate in the making of this amendment. Due consideration has been given to the single comment received.

The commenter supports the proposed rule.

### Conclusion

After careful review of the available data, including the comment noted above, the FAA has determined that air safety and the public interest require the adoption of the rule as proposed.

### Cost Impact

The FAA estimates that 10 Jetstream Model BAe ATP series airplanes of U.S. registry will be affected by this AD.

It will take approximately 7 work hours per airplane to accomplish the required modification of the stop lever for the bellcrank assembly of the elevator flight control system, at an average labor rate of $60 per work hour. Based on these figures, the cost impact of the required modification of this lever on U.S. operators is estimated to be $4,200, or $420 per airplane.

It will take approximately 1 work hour per airplane to accomplish the required removal of the retaining cords on airplanes that have been fitted with Jetstream Modification 35205A. The average labor rate is $60 per work hour.

Based on these figures, the cost impact of this required removal on U.S. operators of airplanes fitted with Jetstream Modification 35205A is estimated to be $600, or $60 per airplane.

The cost impact figures discussed above are based on assumptions that no operator has yet accomplished any of the requirements of this AD action, and that no operator would accomplish those actions in the future if this AD were not adopted.

## Regulatory Impact

The regulations adopted herein will not have substantial direct effects on the States, on the relationship between the national government and the States, or on the distribution of power and responsibilities among the various levels of government. Therefore, in accordance with Executive Order 12612, it is determined that this final rule does not have sufficient federalism implications to warrant the preparation of a Federalism Assessment.

For the reasons discussed above, I certify that this action (1) is not a ''significant regulatory action'' under Executive Order 12866; (2) is not a ''significant rule'' under DOT Regulatory Policies and Procedures (44 FR 11034, February 26, 1979); and (3) will not have a significant economic impact, positive or negative, on a substantial number of small entities under the criteria of the Regulatory Flexibility Act. A final evaluation has been prepared for this action and it is contained in the Rules Docket. A copy of it may be obtained from the Rules Docket at the location provided under the caption **ADDRESSES**.

## List of Subjects in 14 CFR Part 39

Air transportation, Aircraft, Aviation safety, Incorporation by reference, Safety.

## Adoption of the Amendment

Accordingly, pursuant to the authority delegated to me by the Administrator, the Federal Aviation Administration amends part 39 of the Federal Aviation Regulations (14 CFR part 39) as follows:

## PART 39—AIRWORTHINESS DIRECTIVES

1. The authority citation for part 39 continues to read as follows:

**Authority:** 49 U.S.C. 106(g), 40113, 44701.

### §39.13 [Amended]

2. Section 39.13 is amended by adding the following new airworthiness directive:

**97–09–10 Jetstream Aircraft Limited (Formerly British Aerospace Commercial Aircraft Limited):** Amendment 39–10006. Docket 96–NM–100–AD.

*Applicability:* Model BAe ATP series airplanes as listed in Jetstream Service Bulletin ATP–27–78, Revision 1, dated January 31, 1996; certificated in any category.

**Note 1:** This AD applies to each airplane identified in the preceding applicability provision, regardless of whether it has been otherwise modified, altered, or repaired in the area subject to the requirements of this AD. For airplanes that have been modified, altered, or repaired so that the performance of the requirements of this AD is affected, the owner/operator must request approval for an alternative method of compliance in accordance with paragraph (c) of this AD. The request should include an assessment of the effect of the modification, alteration, or repair on the unsafe condition addressed by this AD; and, if the unsafe condition has not been eliminated, the request should include specific proposed actions to address it.

*Compliance:* Required as indicated, unless accomplished previously.

To prevent the flight crew from having to engage the standby elevator control system in order to regulate the pitch of the airplane, and to prevent malfunctioning of the pitch warning system for the propellers, either of which could lead to reduced controllability of the airplane, accomplish the following:

(a) For airplanes on which Jetstream Modification 35205A has been installed: Within 3 months after the effective date of this AD, remove the retaining cords on the access panels to the powerplant microswitches, in accordance with Part 2 of Jetstream Service Bulletin ATP–27–78, Revision 1, dated January 31, 1996.

**Note 2:** Jetstream Modification 35205A is described in Jetstream Service Bulletin ATP–53–19, dated January 13, 1993.

(b) For all airplanes: Within 18 months after the effective date of this AD, modify the stop lever for the bellcrank assembly of the elevator flight control system, in accordance with Part 1 of Jetstream Service Bulletin ATP–27–78, Revision 1, dated January 31, 1996.

(c) An alternative method of compliance or adjustment of the compliance time that provides an acceptable level of safety may be used if approved by the Manager, Standardization Branch, ANM–113, FAA, Transport Airplane Directorate. Operators shall submit their requests through an appropriate FAA Principal Maintenance Inspector, who may add comments and then send it to the Manager, Standardization Branch, ANM–113.

**Note 3:** Information concerning the existence of approved alternative methods of compliance with this AD, if any, may be obtained from the Standardization Branch, ANM–113.

(d) Special flight permits may be issued in accordance with sections 21.197 and 21.199 of the Federal Aviation Regulations (14 CFR 21.197 and 21.199) to operate the airplane to a location where the requirements of this AD can be accomplished.

(e) The removal and modification shall be done in accordance with Jetstream Service Bulletin ATP–27–78, Revision 1, dated January 31, 1996, which contains the following list of effective pages:

| Page No. | Revision level shown on page | Date shown on page |
|---|---|---|
| 1, 3, 6 | 1 | Jan. 31, 1996. |
| 2, 4, 5, 7–10 | Original | Dec. 21, 1995. |

This incorporation by reference was approved by the Director of the Federal Register in accordance with 5 U.S.C. 552(a) and 1 CFR part 51. Copies may be obtained from Jetstream Aircraft, Inc., P.O. Box 16029, Dulles International Airport, Washington, DC 20041–6029. Copies may be inspected at the FAA, Transport Airplane Directorate, 1601 Lind Avenue, SW., Renton, Washington; or at the Office of the Federal Register, 800 North Capitol Street, NW., suite 700, Washington, DC.

(f) This amendment becomes effective on June 6, 1997.

Issued in Renton, Washington, on April 23, 1997.

**Neil D. Schalekamp,**

*Acting Manager, Transport Airplane Directorate, Aircraft Certification Service.*

[FR Doc. 97–11479 Filed 5–1–97; 8:45 am]

BILLING CODE 4910–13–U

---

## DEPARTMENT OF TRANSPORTATION

## Federal Aviation Administration

## 14 CFR Part 39

**[Docket No. 96–NM–278–AD; Amendment 39–10003; AD 97–09–07]**

**RIN 2120–AA64**

## Airworthiness Directives; McDonnell Douglas Model MD–11 Series Airplanes

**AGENCY:** Federal Aviation Administration, DOT.

**ACTION:** Final rule.

**SUMMARY:** This amendment supersedes an existing airworthiness directive (AD), applicable to certain McDonnell Douglas Model MD–11 series airplanes, that currently requires inspections to detect damage of the support brackets and clamps of the transfer pipe of the tail tank, and of the transfer pipe assembly; and replacement of damaged parts, or installation of a doubler, if necessary. This amendment adds a requirement to install a fuel transfer pipe of the tail tank, and to install support brackets and clamps of the fuel feed pipe of engine No. 2, which constitutes terminating action for the repetitive inspections. This amendment also requires, for certain airplanes, removal of a temporary protective doubler installed on the fuel pipe assembly. This amendment is prompted by reports of cracking of the support brackets in the refuel and fuel transfer lines of the tail fuel tank and damage to the nylon clamps and transfer pipe assembly. The actions specified by this AD are intended to prevent such cracking and damage, which could result in further damage to the transfer pipe assembly and possible fuel leakage.

**DATES:** Effective June 6, 1997.

The incorporation by reference of McDonnell Douglas Alert Service Bulletin MD11–28A083, dated March 13, 1996, as listed in the regulations, was approved previously by the Director of the Federal Register as of May 24, 1996 (61 FR 21066, May 9, 1996).

The incorporation by reference of certain other publications listed in the regulations is approved by the Director of the Federal Register as of June 6, 1997.

**ADDRESSES:** The service information referenced in this AD may be obtained from McDonnell Douglas Corporation, 3855 Lakewood Boulevard, Long Beach, California 90846, Attention: Technical Publications Business Administration, Department C1–L51 (2–60). This information may be examined at the Federal Aviation Administration (FAA), Transport Airplane Directorate, Rules Docket, 1601 Lind Avenue, SW., Renton, Washington; or at the FAA, Transport Airplane Directorate, Los Angeles Aircraft Certification Office, 3960 Paramount Boulevard, Lakewood, California; or at the Office of the Federal Register, 800 North Capitol Street, NW., suite 700, Washington, DC.

**FOR FURTHER INFORMATION CONTACT:** Raymond Vakili, Aerospace Engineer, Propulsion Branch, ANM–140L, FAA, Los Angeles Aircraft Certification Office, 3960 Paramount Boulevard, Lakewood, California 90712; telephone (310) 627–5262; fax (310) 627–5210.

**SUPPLEMENTARY INFORMATION:** A proposal to amend part 39 of the Federal Aviation Regulations (14 CFR part 39) by superseding AD 96–10–07, amendment 39–9612 (61 FR 21066, May 9, 1996), which is applicable to certain McDonnell Douglas Model MD–11 series airplanes, was published in the **Federal Register** on February 18, 1997 (62 FR 7180). The action proposed to supersede AD 96–10–07 to continue to require visual inspections to detect cracking, bending, or stress of the support brackets and damage to the nylon clamps of the transfer pipe of the tail tank. It also proposed to continue to require repetitive inspections to detect damage of the support brackets and clamps.

However, for certain airplanes, this AD adds a requirement to remove certain clamps and the temporary protective doubler on the fuel pipe assembly. It also requires installation of a fuel transfer pipe of the tail tank, and installation of support brackets and pipe clamps of the fuel feed pipe on engine No. 2, which constitutes terminating action for the repetitive inspections.

Interested persons have been afforded an opportunity to participate in the making of this amendment. Due consideration has been given to the two comments received.

Both commenters support the proposed rule.

### Conclusion

After careful review of the available data, including the comments noted above, the FAA has determined that air safety and the public interest require the adoption of the rule as proposed.

### Cost Impact

There are approximately 145 Model MD–11 series airplanes of the affected design in the worldwide fleet. The FAA estimates that 40 airplanes of U.S. registry will be affected by this proposed AD.

The actions that are currently required by AD 96–10–07 take approximately 2 work hours per airplane to accomplish, at an average labor rate of $60 per work hour. Based on these figures, the cost impact of the currently required actions on U.S. operators is estimated to be $4,800, or $120 per airplane, per inspection cycle.

The new actions that are required by this new AD will take approximately 6 work hours per airplane to accomplish, at an average labor rate of $60 per work hour. Required parts will cost approximately $691 per airplane. Based on these figures, the cost impact of the new requirements of this AD on U.S. operators is estimated to be $42,040, or $1,051 per airplane.

The cost impact figures discussed above are based on assumptions that no operator has yet accomplished any of the requirements of this AD action, and that no operator would accomplish those actions in the future if this AD were not adopted.

### Regulatory Impact

The regulations adopted herein will not have substantial direct effects on the States, on the relationship between the national government and the States, or on the distribution of power and responsibilities among the various levels of government. Therefore, in accordance with Executive Order 12612, it is determined that this final rule does not have sufficient federalism implications to warrant the preparation of a Federalism Assessment.

For the reasons discussed above, I certify that this action (1) is not a ''significant regulatory action'' under Executive Order 12866; (2) is not a ''significant rule'' under DOT Regulatory Policies and Procedures (44 FR 11034, February 26, 1979); and (3)

will not have a significant economic impact, positive or negative, on a substantial number of small entities under the criteria of the Regulatory Flexibility Act. A final evaluation has been prepared for this action and it is contained in the Rules Docket. A copy of it may be obtained from the Rules Docket at the location provided under the caption **ADDRESSES**.

## List of Subjects in 14 CFR Part 39

Air transportation, Aircraft, Aviation safety, Incorporation by reference, Safety.

## Adoption of the Amendment

Accordingly, pursuant to the authority delegated to me by the Administrator, the Federal Aviation Administration amends part 39 of the Federal Aviation Regulations (14 CFR part 39) as follows:

## PART 39—AIRWORTHINESS DIRECTIVES

1. The authority citation for part 39 continues to read as follows:

**Authority:** 49 U.S.C. 106(g), 40113, 44701.

### §39.13 [Amended]

2. Section 39.13 is amended by removing amendment 39–9612 (61 FR 21066, May 9, 1996), and by adding a new airworthiness directive (AD), amendment 39–10003, to read as follows:

**97–09–07 McDonnell Douglas:** Amendment 39–10003. Docket 96-NM–278-AD. Supersedes AD 96–10–07, Amendment 39–9612.

*Applicability:* Model MD–11 series airplanes; as listed in McDonnell Douglas Service Bulletin MD11–28–089, dated October 24, 1996; certificated in any category.

**Note 1**: This AD applies to each airplane identified in the preceding applicability provision, regardless of whether it has been otherwise modified, altered, or repaired in the area subject to the requirements of this AD. For airplanes that have been modified, altered, or repaired so that the performance of the requirements of this AD is affected, the owner/operator must request approval for an alternative method of compliance in accordance with paragraph (c)(1) of this AD. The request should include an assessment of the effect of the modification, alteration, or repair on the unsafe condition addressed by this AD; and, if the unsafe condition has not been eliminated, the request should include specific proposed actions to address it.

*Compliance:* Required as indicated, unless accomplished previously.

To prevent cracking of the support brackets in the refuel and fuel transfer lines of the tail fuel tank and damage to the nylon clamps and transfer pipe assembly, which, if not corrected, could result in further damage to the transfer pipe assembly and possible fuel leakage, accomplish the following:

**Restatement of Requirements of AD 96–10–07**

(a) For Group 1 airplanes listed in McDonnell Douglas Alert Service Bulletin MD11–28A083, dated March 13, 1996: Within 90 days after May 24, 1996 (the effective date of AD 96–10–07, amendment 39–9612), accomplish the requirements of paragraphs (a)(1) and (a)(2) of this AD in accordance with Paragraph 3. of the Accomplishment Instructions of McDonnell Douglas Alert Service Bulletin MD11–28A083, dated March 13, 1996, or McDonnell Douglas Alert Service Bulletin MD11–28A083, Revision 01, dated May 29, 1996.

(1) Perform a visual inspection for cracking, bending, or stress of the support brackets and damage to the nylon clamps of the transfer pipe of the tail tank, in accordance with the alert service bulletin. If any damaged bracket or clamp is detected, prior to further flight, replace it with a serviceable part in accordance with the alert service bulletin.

(2) Perform a visual inspection for chafing and/or denting of the transfer pipe assembly of the tail tank, in accordance with the alert service bulletin.

(i) *Condition 1.* If no damage to the fuel pipe assembly is detected, accomplish the requirements of either paragraph (a)(2)(i)(A) or (a)(2)(i)(B) of this AD at the times specified in that paragraph.

(A) Condition 1, Option 1. Thereafter, repeat the visual inspections required by paragraph (a) of this AD at intervals not to exceed 600 flight hours; or

(B) Condition 1, Option 2. Install a temporary doubler on the fuel pipe assembly in accordance with the alert service bulletin and, thereafter, repeat the visual inspections required by paragraph (a) of this AD at intervals not to exceed 15 months.

(ii) *Condition 2.* If damage is found that is within the limits specified by the alert service bulletin, prior to further flight, install a temporary doubler on the fuel pipe assembly. Thereafter, repeat the visual inspections required by paragraph (a) of this AD at intervals not to exceed 15 months.

(iii) *Condition 3.* If damage is found that is outside the limits specified by the alert service bulletin, prior to further flight, replace the fuel pipe assembly with a new or serviceable assembly; and accomplish the requirements of either paragraph (a)(2)(iii)(A) or (a)(2)(iii)(B) of this AD at the time specified in that paragraph.

(A) Condition 3, Option 1. Thereafter, repeat the visual inspections required by paragraph (a) of this AD at intervals not to exceed 600 flight hours; or

(B) Condition 3, Option 2. Install a temporary doubler on the fuel pipe assembly; and repeat the visual inspections required by paragraph (a) of this AD, thereafter, at intervals not to exceed 15 months. (Replacement of the fuel pipe assembly with a serviceable pipe assembly that has been repaired by welding a doubler in the area of potential damage, does not require the installation of a temporary doubler.)

**New Requirements of This AD**

(b) Within 24 months after the effective date of this AD, accomplish the requirements of paragraphs (b)(1) and (b)(2) of this AD, as applicable.

(1) For airplanes on which the temporary protective doubler has been installed on the fuel pipe assembly in accordance with McDonnell Douglas Alert Service Bulletin MD11–28A083, dated March 13, 1996: Remove the clamps and the temporary protective doubler installed on the fuel transfer pipe, in accordance with McDonnell Douglas Service Bulletin MD11–28–089, dated October 24, 1996. Prior to further flight following accomplishment of the removal, accomplish the requirements of paragraph (a)(2) of this AD.

(2) For all airplanes: Install the fuel transfer pipe of the tail tank and support brackets and clamps of the fuel feed pipe of engine No. 2, in accordance with McDonnell Douglas Service Bulletin MD11–28–089, dated October 24, 1996. Accomplishment of this installation constitutes terminating action for the requirements of this AD.

(c)(1) An alternative method of compliance or adjustment of the compliance time that provides an acceptable level of safety may be used if approved by the Manager, Los Angeles Aircraft Certification Office (ACO), FAA, Transport Airplane Directorate. Operators shall submit their requests through an appropriate FAA Principal Maintenance Inspector, who may add comments and then send it to the Manager, Los Angeles ACO.

(2) Alternative methods of compliance that concern the use of an alternate material in lieu of the specified temporary doubler, which were approved previously in accordance with AD 96–10–07, amendment 39–9612, are not considered to be approved as alternative methods of compliance with this AD.

(d) An alternative method of compliance or adjustment of the compliance time that provides an acceptable level of safety may be used if approved by the Manager, Los Angeles Aircraft Certification Office (ACO), FAA, Transport Airplane Directorate. Operators shall submit their requests through an appropriate FAA Principal Maintenance Inspector, who may add comments and then send it to the Manager, Los Angeles ACO.

**Note 2:** Information concerning the existence of approved alternative methods of compliance with this AD, if any, may be obtained from the Los Angeles ACO.

(e) Special flight permits may be issued in accordance with sections 21.197 and 21.199 of the Federal Aviation Regulations (14 CFR 21.197 and 21.199) to operate the airplane to a location where the requirements of this AD can be accomplished.

(f) Certain actions shall be done in accordance with McDonnell Douglas Alert Service Bulletin MD11–28A083, dated March 13, 1996, or McDonnell Douglas Alert Service Bulletin MD11–28A083, Revision 01, dated May 29, 1996. Certain other actions shall be done in accordance with McDonnell Douglas Service Bulletin MD11–28–089, dated October 24, 1996. The incorporation by

reference of McDonnell Douglas Alert Service Bulletin MD11–28A083, dated March 13, 1996, was approved previously by the Director of the Federal Register in accordance with 5 U.S.C. 552(a) and 1 CFR part 51 as of May 24, 1996 (61 FR 21066, May 9, 1996). The incorporation by reference of the remainder of the service documents listed above is approved by the Director of the Federal Register in accordance with 5 U.S.C. 552(a) and 1 CFR part 51. Copies may be obtained from McDonnell Douglas Corporation, 3855 Lakewood Boulevard, Long Beach, California 90846, Attention: Technical Publications Business Administration, Department C1-L51 (2–60). Copies may be inspected at the FAA, Transport Airplane Directorate, 1601 Lind Avenue, SW., Renton, Washington; or at the FAA, Transport Airplane Directorate, Los Angeles Aircraft Certification Office, 3960 Paramount Boulevard, Lakewood, California; or at the Office of the Federal Register, 800 North Capitol Street, NW., suite 700, Washington, DC.

(g) This amendment becomes effective on June 6, 1997.

Issued in Renton, Washington, on April 21, 1997.

**Darrell M. Pederson,**

*Acting Manager, Transport Airplane Directorate, Aircraft Certification Service.*

[FR Doc. 97–10788 Filed 5–1–97; 8:45 am]

BILLING CODE 4910–13–U

---

## DEPARTMENT OF TRANSPORTATION

## Federal Aviation Administration

## 14 CFR Part 39

**[Docket No. 96–NM–141–AD; Amendment 39–10007; AD 97–09–11]**

**RIN 2120–AA64**

## Airworthiness Directives; Aerospatiale Model ATR42 and ATR72 Series Airplanes

**AGENCY:** Federal Aviation Administration, DOT.

**ACTION:** Final rule.

**SUMMARY:** This amendment adopts a new airworthiness directive (AD), applicable to certain Aerospatiale Model ATR42 and ATR72 series airplanes, that requires modification of the handle of the passenger/crew door to change the ''down-to-open'' configuration of the handle to an ''up-to-open'' configuration. This amendment is prompted by a report indicating that, immediately after takeoff, the passenger/crew door opened and separated from the airplane, due to the inadvertent operation of the door handle. The actions specified by this AD are intended to prevent inadvertent opening of the passenger/crew door during unpressurized flight, or delays in opening the door during an emergency evacuation.

**DATES:** Effective June 6, 1997.

The incorporation by reference of certain publications listed in the regulations is approved by the Director of the Federal Register as of June 6, 1997.

**ADDRESSES:** The service information referenced in this AD may be obtained from Aerospatiale, 316 Route de Bayonne, 31060 Toulouse, Cedex 03, France. This information may be examined at the Federal Aviation Administration (FAA), Transport Airplane Directorate, Rules Docket, 1601 Lind Avenue, SW., Renton, Washington; or at the Office of the Federal Register, 800 North Capitol Street, NW., suite 700, Washington, DC.

**FOR FURTHER INFORMATION CONTACT:** Gary Lium, Aerospace Engineer, Standardization Branch, ANM–113, FAA, Transport Airplane Directorate, 1601 Lind Avenue, SW., Renton, Washington 98055–4056; telephone (206) 227–1112; fax (206) 227–1149.

**SUPPLEMENTARY INFORMATION:** A proposal to amend part 39 of the Federal Aviation Regulations (14 CFR part 39) to include an airworthiness directive (AD) that is applicable to certain Aerospatiale Model ATR42 and ATR72 series airplanes was published in the **Federal Register** on February 19, 1997 (62 FR 7384). That action proposed to require modification of the handle of the passenger/crew door to change the ''down-to-open'' configuration to an ''up-to-open'' configuration.

Interested persons have been afforded an opportunity to participate in the making of this amendment. Due consideration has been given to the single comment received.

The commenter supports the proposed rule.

### Conclusion

After careful review of the available data, including the comment noted above, the FAA has determined that air safety and the public interest require the adoption of the rule as proposed.

### Cost Impact

The FAA estimates that 16 Aerospatiale Model ATR42 and ATR72 series airplanes of U.S. registry will be affected by this AD, that it will take approximately 15 work hours per airplane to accomplish the required actions, and that the average labor rate is $60 per work hour. Required parts will be supplied by the manufacturer at no cost to the operators. Based on these figures, the cost impact of the AD on U.S. operators is estimated to be $14,400, or $900 per airplane.

The cost impact figure discussed above is based on assumptions that no operator has yet accomplished any of the requirements of this AD action, and that no operator would accomplish those actions in the future if this AD were not adopted.

### Regulatory Impact

The regulations adopted herein will not have substantial direct effects on the States, on the relationship between the national government and the States, or on the distribution of power and responsibilities among the various levels of government. Therefore, in accordance with Executive Order 12612, it is determined that this final rule does not have sufficient federalism implications to warrant the preparation of a Federalism Assessment.

For the reasons discussed above, I certify that this action (1) is not a ''significant regulatory action'' under Executive Order 12866; (2) is not a ''significant rule'' under DOT Regulatory Policies and Procedures (44 FR 11034, February 26, 1979); and (3) will not have a significant economic impact, positive or negative, on a substantial number of small entities under the criteria of the Regulatory Flexibility Act. A final evaluation has been prepared for this action and it is contained in the Rules Docket. A copy of it may be obtained from the Rules Docket at the location provided under the caption **ADDRESSES**.

### List of Subjects in 14 CFR Part 39

Air transportation, Aircraft, Aviation safety, Incorporation by reference, Safety.

### Adoption of the Amendment

Accordingly, pursuant to the authority delegated to me by the Administrator, the Federal Aviation Administration amends part 39 of the Federal Aviation Regulations (14 CFR part 39) as follows:

## PART 39—AIRWORTHINESS DIRECTIVES

1. The authority citation for part 39 continues to read as follows:

**Authority:** 49 U.S.C. 106(g), 40113, 44701.

**§39.13 [Amended]**

2. Section 39.13 is amended by adding the following new airworthiness directive:

**97–09–11 Aerospatiale:** Amendment 39–10007. Docket 96–NM–141–AD.

*Applicability:* Model ATR42 and ATR72 series airplanes on which Aerospatiale

Modification 04019 has been accomplished, certificated in any category.

**Note 1:** This AD applies to each airplane identified in the preceding applicability provision, regardless of whether it has been otherwise modified, altered, or repaired in the area subject to the requirements of this AD. For airplanes that have been modified, altered, or repaired so that the performance of the requirements of this AD is affected, the owner/operator must request approval for an alternative method of compliance in accordance with paragraph (b) of this AD. The request should include an assessment of the effect of the modification, alteration, or repair on the unsafe condition addressed by this AD; and, if the unsafe condition has not been eliminated, the request should include specific proposed actions to address it.

*Compliance:* Required as indicated, unless accomplished previously.

To prevent inadvertent opening of the passenger/crew door during unpressurized flight, or delays in opening the passenger/crew door during an emergency evacuation, accomplish the following:

(a) Within 6 months after the effective date of this AD, modify the handle of the passenger/crew door by changing its configuration to an ''up-to-open'' configuration in accordance with Aerospatiale Service Bulletin ATR42–52–0072 (for Model ATR42 series airplanes), or ATR72–52–1040 (for Model ATR72 series airplanes), both dated October 2, 1995.

(b) An alternative method of compliance or adjustment of the compliance time that provides an acceptable level of safety may be used if approved by the Manager, Standardization Branch, ANM–113, FAA, Transport Airplane Directorate. Operators shall submit their requests through an appropriate FAA Principal Maintenance Inspector, who may add comments and then send it to the Manager, Standardization Branch, ANM–113.

**Note 2:** Information concerning the existence of approved alternative methods of compliance with this AD, if any, may be obtained from the Standardization Branch, ANM–113.

(c) Special flight permits may be issued in accordance with sections 21.197 and 21.199 of the Federal Aviation Regulations (14 CFR 21.197 and 21.199) to operate the airplane to a location where the requirements of this AD can be accomplished.

(d) The modification shall be done in accordance with Aerospatiale Service Bulletin ATR42–52–0072, dated October 2, 1995, or Aerospatiale Service Bulletin ATR72–52–1040, dated October 2, 1995, as applicable. This incorporation by reference was approved by the Director of the Federal Register in accordance with 5 U.S.C. 552(a) and 1 CFR part 51. Copies may be obtained from Aerospatiale, 316 Route de Bayonne, 31060 Toulouse, Cedex 03, France. Copies may be inspected at the FAA, Transport Airplane Directorate, 1601 Lind Avenue, SW., Renton, Washington; or at the Office of the Federal Register, 800 North Capitol Street, NW., suite 700, Washington, DC.

(e) This amendment becomes effective on June 6, 1997.

Issued in Renton, Washington, on April 24, 1997.

**Neil D. Schalekamp,**

*Acting Manager, Transport Airplane Directorate, Aircraft Certification Service.*

[FR Doc. 97–11197 Filed 5–1–97; 8:45 am]

BILLING CODE 4910–13–U

---

## DEPARTMENT OF TRANSPORTATION

## Federal Aviation Administration

## 14 CFR Part 39

**[Docket No. 96–NM–52–AD; Amendment 39–10009; AD 97–09–13]**

**RIN 2120–AA64**

## Airworthiness Directives; Boeing Model 747 Series Airplanes

**AGENCY:** Federal Aviation Administration, DOT.

**ACTION:** Final rule.

**SUMMARY:** This amendment adopts a new airworthiness directive (AD), applicable to certain Boeing Model 747 series airplanes, that requires a one-time inspection to detect corrosion and cracking of the upper deck floor beam at station 980, and repair, if necessary. This amendment is prompted by reports of extensive corrosion found at station 980. Analysis of the corrosion indicated that fatigue cracking of the floor beam at this area could occur and cause the beam to break. The actions specified by this AD are intended to detect and correct such corrosion and/or cracking, which could cause the floor beam to break and result in extensive damage to adjacent structure and possible rapid decompression of the airplane.

**DATES:** Effective June 6, 1997.

The incorporation by reference of certain publications listed in the regulations is approved by the Director of the Federal Register as of June 6, 1997.

**ADDRESSES:** The service information referenced in this AD may be obtained from Boeing Commercial Airplane Group, P.O. Box 3707, Seattle, Washington 98124–2207. This information may be examined at the Federal Aviation Administration (FAA), Transport Airplane Directorate, Rules Docket, 1601 Lind Avenue, SW., Renton, Washington; or at the Office of the Federal Register, 800 North Capitol Street, NW., suite 700, Washington, DC.

**FOR FURTHER INFORMATION CONTACT:** Bob Breneman, Aerospace Engineer, Airframe Branch, ANM–120S, FAA, Seattle Aircraft Certification Office, 1601 Lind Avenue, SW., Renton, Washington; telephone (206) 227–2776; fax (206) 227–1181.

**SUPPLEMENTARY INFORMATION:** A proposal to amend part 39 of the Federal Aviation Regulations (14 CFR part 39) to include an airworthiness directive (AD) that is applicable to certain Boeing Model 747 series airplanes was published in the **Federal Register** on November 18, 1996 (61 FR 58667). That action proposed to require a one-time detailed visual inspection to detect corrosion and/or fatigue cracking of the upper deck floor beam at station 980 with the cart lift threshold removed, and repair, if necessary. That action also proposed to provide an alternative inspection method for older airplanes, which includes a detailed visual inspection to detect corrosion and/or fatigue cracking of the upper deck floor beam at station 980 with the cart lift threshold installed, followed later by an inspection with the cart lift threshold removed, and repair, if necessary.

Interested persons have been afforded an opportunity to participate in the making of this amendment. Due consideration has been given to the comments received.

### Support for the Proposal

Four commenters support the proposal.

### Request to Revise the Initial Compliance Time for Certain Airplanes

One commenter requests that the initial inspection threshold be revised for airplanes that have been modified in accordance with Boeing Service Bulletin 747–53–2327. The commenter requests that the compliance time be changed from the proposed ''within 6 years after the effective date of the AD'' to ''within 6 years after the accomplishment of the actions described in Boeing Service Bulletin 747–53–2327.'' The commenter notes that the actions described in that service bulletin include a modification to install a new increased thickness shear plate at the stairway cutout and cart lift cutout. The commenter asserts that the modification reduces the stress levels by approximately 25%, and increases the tolerance to corrosion damage. In addition, the commenter notes that Boeing Service Bulletin 747–53–2327 also includes a description of procedures to perform a detailed visual inspection for corrosion and treatment of the affected area with corrosion preventative compound BMS 3–23.

The FAA concurs with the commenter's request to revise the proposed compliance time. The FAA has determined that existing corrosion would be detected and corrected in accordance with Boeing Service Bulletin 747–53–2327. The FAA also acknowledges that the installation of an

increased thickness shear plate will reduce the stress level of the floor beam upper chord; however, corrosion of the upper chord of the station 980 upper deck floor beam is primarily dependent on environmental conditions and time-in-service, not the stress level. Nevertheless, since the existing corrosion would be detected and corrected in accordance with that service bulletin, paragraph (a) of the final rule has been revised to specify that the initial inspection requirement of this AD may be accomplished within 6 years after the accomplishment of the actions specified in Boeing Service Bulletin 747–53–2327.

**Request to Consider Previously Accomplished Service Information**

Two commenters request that the FAA consider accomplishment of Boeing Service Bulletin 747–53–2327, Revision 1, (which includes the application of faying surface sealant between the threshold and the floor beam chord) as an alternative method of compliance for the requirements of the proposed AD. The commenters did not explain why accomplishment of Revision 1 should be considered as an alternative method of compliance.

The FAA does not concur. The FAA finds that the procedures described in Boeing Service Bulletin 747–53–2327, Revision 1, do not provide adequate instructions for applying faying surface sealant between the cart lift threshold and floor beam during the modification. In light of this, the FAA has determined that there is no assurance that operators will install the faying surface sealant during the modification. However, under the provisions of paragraph (c) of the final rule, the FAA may approve requests for an alternative method of compliance if sufficient justification is presented to the FAA.

**Request To Exclude Certain Airplanes From the Requirements of the AD**

One commenter, the airplane manufacturer, requests that four Model 747–400 series airplanes that were modified to include a cart lift system in accordance with Boeing Service Bulletin 747–25–3108, be excluded from the applicability of this AD. The manufacturer states that the subject modification provides adequate instructions for the installation of faying surface sealant between the cart lift threshold and the existing station 980 floor beam.

The FAA acknowledges that the modification described in Boeing Service Bulletin 747–25–3108 provides adequate instructions for the installation of faying surface sealant between the cart lift threshold and the existing station 980 floor beam. However, the four airplanes listed in the effectivity listing of that service bulletin range between line positions 891 and 927. The FAA points out that the applicability for this AD expressly states ''for Model 747–300 and –400 series airplanes having line numbers up to and including 843.'' Therefore, no change to the final rule is necessary.

**Clarification of the Reinstallation Requirements of the AD**

In paragraph (a) of this AD, to clarify the FAA's intent that, after the one-time detailed visual inspection and any necessary repair, the cart lift threshold should be reinstalled in accordance with the alert service bulletin, the FAA has added the words ''then reinstall.'' To further clarify this intent, in paragraph (c)(1) of this AD, the FAA has added the words ''and reinstall; in accordance with the alert service bulletin.''

**Conclusion**

After careful review of the available data, including the comments noted above, the FAA has determined that air safety and the public interest require the adoption of the rule with the changes previously described. The FAA has determined that these changes will neither increase the economic burden on any operator nor increase the scope of the AD.

**Cost Impact**

There are approximately 195 Model 747 series airplanes of the affected design in the worldwide fleet. The FAA estimates that 28 airplanes of U.S. registry will be affected by this AD, that it will take approximately 19 work hours per airplane to accomplish the required actions, and that the average labor rate is $60 per work hour. Based on these figures, the cost impact of the AD on U.S. operators is estimated to be $31,920, or $1,140 per airplane.

The cost impact figure discussed above is based on assumptions that no operator has yet accomplished any of the requirements of this AD action, and that no operator would accomplish those actions in the future if this AD were not adopted.

**Regulatory Impact**

The regulations adopted herein will not have substantial direct effects on the States, on the relationship between the national government and the States, or on the distribution of power and responsibilities among the various levels of government. Therefore, in accordance with Executive Order 12612, it is determined that this final rule does not have sufficient federalism implications to warrant the preparation of a Federalism Assessment.

For the reasons discussed above, I certify that this action (1) is not a ''significant regulatory action'' under Executive Order 12866; (2) is not a ''significant rule'' under DOT Regulatory Policies and Procedures (44 FR 11034, February 26, 1979); and (3) will not have a significant economic impact, positive or negative, on a substantial number of small entities under the criteria of the Regulatory Flexibility Act. A final evaluation has been prepared for this action and it is contained in the Rules Docket. A copy of it may be obtained from the Rules Docket at the location provided under the caption **ADDRESSES**.

**List of Subjects in 14 CFR Part 39**

Air transportation, Aircraft, Aviation safety, Incorporation by reference, Safety.

**Adoption of the Amendment**

Accordingly, pursuant to the authority delegated to me by the Administrator, the Federal Aviation Administration amends part 39 of the Federal Aviation Regulations (14 CFR part 39) as follows:

## PART 39—AIRWORTHINESS DIRECTIVES

1. The authority citation for part 39 continues to read as follows:

**Authority:** 49 U.S.C. 106(g), 40113, 44701.

**§ 39.13 [Amended]**

2. Section 39.13 is amended by adding the following new airworthiness directive:

**97–09–13 Boeing:** Amendment 39–10009. Docket 96–NM–52–AD.

*Applicability:* Model 747–300 and –400 series airplanes having line numbers up to and including 843, and Model 747 series airplanes modified to a stretched upper deck configuration; on which an upper deck cart lift has been installed at station 980; certificated in any category.

**Note 1:** This AD applies to each airplane identified in the preceding applicability provision, regardless of whether it has been otherwise modified, altered, or repaired in the area subject to the requirements of this AD. For airplanes that have been modified, altered, or repaired so that the performance of the requirements of this AD is affected, the owner/operator must request approval for an alternative method of compliance in accordance with paragraph (d) of this AD. The request should include an assessment of the effect of the modification, alteration, or repair on the unsafe condition addressed by this AD; and, if the unsafe condition has not been eliminated, the request should include specific proposed actions to address it.

*Compliance*: Required as indicated, unless accomplished previously.

To detect and correct corrosion and consequent fatigue cracking of the upper deck floor beam at station 980, which could cause the floor beam to break and, consequently, result in extensive damage to adjacent structure and possible rapid decompression of the airplane, accomplish the following:

(a) Perform a one-time detailed visual inspection to detect corrosion and/or fatigue cracking of the upper deck floor beam at station 980 with the cart lift threshold removed, then reinstall; in accordance with Boeing Alert Service Bulletin 747–53A2400, dated December 21, 1995, at the time specified in paragraph (a)(1), (a)(2), or (a)(3) of this AD, as applicable.

**Note 2:** Boeing Alert Service Bulletin 747–53A2400, dated December 21, 1995, specifies that the inspection described in the alert service bulletin need not be accomplished on airplanes on which the actions described in Boeing Service Bulletin 747–53–2327 have been accomplished. However, this AD requires that, for airplanes on which the actions described in Boeing Service Bulletin 747–53–2327 have been accomplished, the initial inspection required by this AD (in accordance with Boeing Alert Service Bulletin 747–53A2400) may be accomplished within 6 years after the accomplishment of those actions specified in Boeing Service Bulletin 747–53–2327. Where there are differences between this AD and the alert service bulletin, the requirements of the AD prevail.

(1) For airplanes that, as of the effective date of this AD, have accumulated less than 6 years since date of delivery of the airplane, or since installation of a stretched upper deck (SUD), or since the accomplishment of Boeing Service Bulletin 747–53–2327: Accomplish the inspection at the later of the times specified in paragraphs (a)(1)(i) and (a)(1)(ii) of this AD.

(i) Within 6 years since date of delivery of the airplane, or since installation of a SUD, or within 6 years since the accomplishment of Boeing Service Bulletin 747–53–2327; whichever occurs later. Or

(ii) Within 1,500 flight cycles after the effective date of this AD.

(2) For airplanes that, as of the effective date of this AD, have accumulated 6 or more years, but less than 10 years, since date of delivery of the airplane or since installation of a SUD: Accomplish the inspection within 1,500 flight cycles or 18 months after the effective date of this AD, whichever occurs first.

(3) For airplanes that, as of the effective date of this AD, have accumulated 10 or more years of service since the time of initial delivery, or since the time of installation of the SUD: Except as provided by paragraph (c) of this AD, accomplish the inspection within 9 months or within 750 flight cycles after the effective date of this AD, whichever occurs first.

(b) If any corrosion or cracking is detected during the inspection required by paragraph (a) of this AD: Prior to further flight, repair the corrosion and/or cracking, and apply sealant between the threshold and the upper deck floor beam at station 980, in accordance with Boeing Alert Service Bulletin 747–53A2400, dated December 21, 1995.

(c) For airplanes that, as of the effective date of this AD, have accumulated 10 or more years of service since the time of initial delivery, or 10 or more years of service since the installation of a SUD: In lieu of accomplishing the requirements of paragraph (a) of this AD, within 9 months after the effective date of this AD, perform a one-time detailed visual inspection to detect corrosion of the upper deck floor beam at station 980 with the cart lift threshold installed, in accordance with Boeing Alert Service Bulletin 747–53A2400, dated December 21, 1995.

(1) If no corrosion or cracking is detected: Within 18 months or 1,500 flight cycles after the effective date of this AD, whichever occurs first, remove the cart lift threshold, perform a visual inspection to detect any corrosion or cracking of the upper deck floor beam at station 980, and reinstall; in accordance with the alert service bulletin. If any corrosion or cracking is detected, prior to further flight, repair the corrosion and/or cracking, and apply sealant between the threshold and the upper deck floor beam at station 980; in accordance with the alert service bulletin.

(2) If any corrosion or cracking is detected: Prior to further flight, remove the cart lift threshold and perform a detailed visual inspection to detect any corrosion or cracking of the upper deck floor beam at station 980; repair any corrosion and/or cracking detected; and apply sealant between the threshold and the upper deck floor beam at station 980; in accordance with the alert service bulletin.

(d) An alternative method of compliance or adjustment of the compliance time that provides an acceptable level of safety may be used if approved by the Manager, Seattle Aircraft Certification Office (ACO), FAA, Transport Airplane Directorate. Operators shall submit their requests through an appropriate FAA Principal Maintenance Inspector, who may add comments and then send it to the Manager, Seattle ACO.

**Note 3:** Information concerning the existence of approved alternative methods of compliance with this AD, if any, may be obtained from the Seattle ACO.

(e) Special flight permits may be issued in accordance with sections 21.197 and 21.199 of the Federal Aviation Regulations (14 CFR 21.197 and 21.199) to operate the airplane to a location where the requirements of this AD can be accomplished.

(f) The actions shall be done in accordance with Boeing Alert Service Bulletin 747–53A2400, dated December 21, 1995. This incorporation by reference was approved by the Director of the Federal Register in accordance with 5 U.S.C. 552(a) and 1 CFR part 51. Copies may be obtained from Boeing Commercial Airplane Group, P.O. Box 3707, Seattle, Washington 98124–2207. Copies may be inspected at the FAA, Transport Airplane Directorate, 1601 Lind Avenue, SW., Renton, Washington; or at the Office of the Federal Register, 800 North Capitol Street, NW., suite 700, Washington, DC.

(g) This amendment becomes effective on June 6, 1997.

Issued in Renton, Washington, on April 24, 1997.

**Neil D. Schalekamp,**

*Acting Manager, Transport Airplane Directorate, Aircraft Certification Service.*

[FR Doc. 97–11199 Filed 5–1–97; 8:45 am]

BILLING CODE 4910–13–U

---

## DEPARTMENT OF TRANSPORTATION

## Federal Aviation Administration

## 14 CFR Part 71

**[Airspace Docket No. 95–AWP–26]**

## Amendment of Class D Airspace; Victorville, CA; Correction

**AGENCY:** Federal Aviation Administration (FAA), DOT.

**ACTION:** Final rule; correction.

**SUMMARY:** This action corrects an error in the geographic coordinates of a Final Rule that was published in the **Federal Register** on February 25, 1997 (62 FR 8368), Airspace Docket No. 95–AWP–26. The Final Rule established Class D airspace at Victorville, CA.

**EFFECTIVE DATE:** 0901 UTC May 22, 1997.

**FOR FURTHER INFORMATION CONTACT:** William Buck, Airspace Specialist, Operations Branch, AWP–530, Air Traffic Division, Western-Pacific Region, Federal Aviation Administration, 15000 Aviation Boulevard, Lawndale, California 90261, telephone (310) 725–6556.

**SUPPLEMENTARY INFORMATION:**

### History

**Federal Register** Document 97–4576, Airspace Docket No. 95–AWP–26, published on February 25, 1997 (62 FR 8368), established Class D airspace area at Victorville, CA. An error was discovered in the geographic coordinates for the Victorville, CA, Class D airspace area. This action corrects that error.

### Correction to Final Rule

Accordingly, pursuant to the authority delegated to me, the geographic coordinates for the Class D airspace area at Victorville, CA, as published in the **Federal Register** on February 25, 1997 (62 FR 8368), (**Federal Register** Document 97–4576; page 8368, column 3), are corrected as follows:

**71.1 [Corrected]**

On page 8368, in the third column, the airspace description for Victorville, Southern California International

Airport, CA is corrected to read as follows:

* * * * *

**AWP CA D Victorville, CA [Corrected]**

Victorville, Southern California International Airport, CA
(Lat. 34°35′40″ N, long. 117°22′56″ W)

That airspace extending upward the surface to 5,400 feet MSL within a 6-mile radius of the Victorville, Southern California International Airport, CA. This Class D airspace area is effective during the specific dates and times established in advance by a Notice to Airmen. The effective date and time will thereafter be continuously published in the Airport/Facility Directory.

* * * * *

Issued in Los Angeles, California, on April 17, 1997.

**Sabra W. Kaulia,**

*Acting Manager, Air Traffic Division, Western-Pacific Region.*

[FR Doc. 97–11486 Filed 5–1–97; 8:45 am]

BILLING CODE 4910–13–M

## DEPARTMENT OF TRANSPORTATION

## Federal Aviation Administration

## 14 CFR Part 97

**[Docket No. 28897; Amdt. No. 1794]**

**RIN 2120–AA65**

## Standard Instrument Approach Procedures; Miscellaneous Amendments

**AGENCY:** Federal Aviation Administration (FAA), DOT.

**ACTION:** Final rule.

**SUMMARY:** This amendment establishes, amends, suspends, or revokes Standard Instrument Approach Procedures (SIAPs) for operations at certain airports. These regulatory actions are needed because of the adoption of new or revised criteria, or because of changes occurring in the National Airspace System, such as the commissioning of new navigational facilities, addition of new obstacles, or changes in air traffic requirements. These changes are designed to provide safe and efficient use of the navigable airspace and to promote safe flight operations under instrument flight rules at the affected airports.

**DATES:** An effective date for each SIAP is specified in the amendatory provisions.

Incorporation by reference-approved by the Director of the Federal Register on December 31, 1980, and reapproved as of January 1, 1982.

**ADDRESSES:** Availability of matters incorporated by reference in the amendment is as follows:

*For Examination*—1. FAA Rules Docket, FAA Headquarters Building, 800 Independence Avenue, SW., Washington, DC 20591;

2. The FAA Regional Office of the region in which the affected airport is located; or

3. The Flight Inspection Area Office which originated the SIAP.

*For Purchase*—Individual SIAP copies may be obtained from:

1. FAA Public Inquiry Center (APA–200), FAA Headquarters Building, 800 Independence Avenue, SW., Washington, DC 20591; or

2. The FAA Regional Office of the region in which the affected airport is located.

*By Subscription*—Copies of all SIAPs, mailed once every 2 weeks, are for sale by the Superintendent of Documents, U.S. Government Printing Office, Washington, DC 20402.

**FOR FURTHER INFORMATION CONTACT:** Paul J. Best, Flight Procedures Standards Branch (AFS–420), Technical Programs Division, Flight Standards Service, Federal Aviation Administration, 800 Independence Avenue, SW., Washington, DC 20591; telephone (202) 267–8277.

**SUPPLEMENTARY INFORMATION:** This amendment to part 97 of the Federal Aviation Regulations (14 CFR part 97) establishes, amends, suspends, or revokes Standard Instrument Approach Procedures (SIAPs). The complete regulatory description of each SIAP is contained in official FAA form documents which are incorporated by reference in this amendment under 5 U.S.C. 552(a), 1 CFR part 51, and § 97.20 of the Federal Aviation Regulations (FAR). The applicable FAA Forms are identified as FAA Forms 8260–3, 8260–4, and 8260–5. Materials incorporated by reference are available for examination or purchase as stated above.

The large number of SIAPs, their complex nature, and the need for a special format make their verbatim publication in the Federal Register expensive and impractical. Further, airmen do not use the regulatory text of the SIAPs, but refer to their graphic depiction on charts printed by publishers of aeronautical materials. Thus, the advantages of incorporation by reference are realized and publication of the complete description of each SIAP contained in FAA form documents is unnecessary. The provisions of this amendment state the affected CFR (and FAR) sections, with the types and effective dates of the SIAPs. This amendment also identifies the airport, its location, the procedure identification and the amendment number.

### The Rule

This amendment to part 97 is effective upon publication of each separate SIAP as contained in the transmittal. Some SIAP amendments may have been previously issued by the FAA in a National Flight Data Center (FDC) Notice to Airmen (NOTAM) as an emergency action of immediate flight safety relating directly to published aeronautical charts. The circumstances which created the need for some SIAP amendments may require making them effective in less than 30 days. For the remaining SIAPs, an effective date at least 30 days after publication is provided.

Further, the SIAPs contained in this amendment are based on the criteria contained in the U.S. Standard for Terminal Instrument Approach Procedures (TERPS). In developing these SIAPs, the TERPS criteria were applied to the conditions existing or anticipated at the affected airports. Because of the close and immediate relationship between these SIAPs and safety in air commerce, I find that notice and public procedure before adopting these SIAPs are impracticable and contrary to the public interest and, where applicable, that good cause exists for making some SIAPs effective in less than 30 days.

The FAA has determined that this regulation only involves an established body of technical regulations for which frequent and routine amendments are necessary to keep them operationally current. It, therefore—(1) Is not a ''significant regulatory action'' under Executive Order 12866; (2) is not a ''significant rule'' under DOT Regulatory Policies and Procedures (44 FR 11034; February 26, 1979); and (3) does not warrant preparation of a regulatory evaluation as the anticipated impact is so minimal. For the same reason, the FAA certifies that this amendment will not have a significant economic impact on a substantial number of small entities under the criteria of the Regulatory Flexibility Act.

### List of Subjects in 14 CFR Part 97

Air Traffic Control, Airports, Navigation (Air).

Issued in Washington, DC on April 18, 1997.

**David R. Harrington,**

*Director, Flight Standards Service.*

### Adoption of the Amendment

Accordingly, pursuant to the authority delegated to me, part 97 of the Federal Aviation Regulations (14 CFR

part 97) is amended by establishing, amending, suspending, or revoking Standard Instrument Approach Procedures, effective at 0901 UTC on the dates specified, as follows:

## PART 97—STANDARD INSTRUMENT APPROACH PROCEDURES

1. The authority citation for part 97 is revised to read as follows:

**Authority:** 49 U.S.C. 106(g), 40103, 40113, 40120, 44701; and 14 CFR 11.49(b)(2).

2. Part 97 is amended to read as follows:

**§ 97.23, 97.25, 97.27, 97.29, 97.31, 97.33, 97.35 [Amended]**

By amending: § 97.23 VOR, VOR/DME, VOR or TACAN, and VOR/DME or TACAN; § 97.25 LOC, LOC/DME, LDA, LDA/DME, SDF, SDF/DME; § 97.27 NDB, NDB/DME; § 97.29 ILS, ILS/DME, ISMLS, MLS, MLS/DME, MLS/RNAV; § 97.31 RADAR SIAPs; § 97.33 RNAV SIAPs; and § 97.35 COPTER SIAPs, identified as follows:

. . . *Effective May 22, 1997* . . .

Anchorage, AK, Anchorage Intl, ILS/DME RWY 14, Orig, CANCELLED
Anchorage, AK, Anchorage Intl, ILS RWY 14, Orig
Atwater, CA, Castle, VOR/DME RWY 13, Orig
Atwater, CA, Castle, VOR/DME RWY 31, Orig
Atwater, CA, Castle, ILS/DME RWY 31, Orig
Clearwater, FL, Clearwater Air Park, GPS RWY 16, Orig
Rockland, ME, Knox County Regional, LOC RWY 13, Orig
Bremerton, WA, Bremerton National, NDB RWY 1, Orig
Bremerton, WA, Bremerton National, NDB OR GPS RWY 1, CANCELLED
Shelton, WA, Sanderson Field, NDB OR GPS–A, Amdt 1

. . . *Effective June 19, 1997* . . .

Pittsfield, MA, Pittsfield Muni, LOC RWY 26, Amdt 5
Pittsfield, MA, Pittsfield Muni, NDB RWY 26, Amdt 4
Lynchburg, VA, Lynchburg Regional/Preston Glenn Field, ILS Rwy 3, Amdt 15
Parkersburg, WV, Wood County Airport—Gill Robb Wilson Field, ILS RWY 3, Amdt 11

. . . *Effective July 17, 1997* . . .

Burlington, CO, Kit Carson County, GPS RWY 15, Orig
Melbourne, FL, Melbourne International, GPS RWY 9L, Orig
Melbourne, FL, Melbourne International, GPS RWY 27R, Orig
Tampa, FL, Tampa Intl, GPS RWY 9, Orig
Tampa, FL, Tampa Intl, GPS RWY 27, Orig
Lawrenceville, GA, Gwinnett County-Briscoe Field, GPS–A, Orig
Newnan, GA, Newnan Coweta County, GPS RWY 14, Orig
Newnan, GA, Newnan Coweta County, GPS RWY 32, Orig
Huntington, IN, Huntington Muni, GPS RWY 9, Orig
Huntington, IN, Huntington Muni, GPS RWY 27, Orig
Monticello, KY, Wayne County, GPS RWY 3, Orig
Monticello, KY, Wayne County, GPS RWY 21, Orig
Mount Sterling, KY, Mount Sterling-Montgomery County, GPS RWY 21, Orig
Mason, MI, Mason Jewett Field, GPS RWY 27, Orig
Cleveland, MS, Cleveland Muni, GPS RWY 35, Orig
Fremont, NE, Fremont Muni, GPS RWY 13, Orig
Wahoo, NE, Wahoo Muni, GPS RWY 20, Orig
Keene, NH, Dillant-Hopkins, ILS RWY 2, Amdt 2
Hillsboro, ND, Hillsboro Muni, GPS RWY 16, Orig
Hillsboro, ND, Hillsboro Muni, GPS RWY 34, Orig
Batavia, OH, Clermont County, GPS RWY 4, Orig
Caldwell, OH, Noble County, GPS RWY 23, Orig
Wapakoneta, OH, Neil Armstrong, GPS RWY 8, Orig
Johnstown, PA, Johnstown-Cambria County, ILS RWY 33, Amdt 4
Highgate, VT, Franklin Cuonty State, GPS RWY 1, Orig
Spokane, WA, Felts Field, ILS/DME RWY 21R, Orig
East Troy, WI, East Troy Muni, GPS RWY 8, Orig
East Troy, WI, East Troy Muni, GPS RWY 26, Orig
Medford, WI, Taylor County, GPS RWY 27, Orig
New Lisbon, WI, Mauston-New Lisbon Union, GPS RWY 32, Orig

**Note:** The FAA published the following procedure in Docket No. 28863, Amdt. No. 1789 to Part 97 of the Federal Aviation Regulations (Vol 62, No. 68) Page 17067 dated Wednesday, April 9, 1997 under section 97.23 effective April 24, 1997 which is hereby amended to change the effective date to May 22, 1997.

**Presque Isle, ME, Northern Maine Regional Arpt at Presque Isle, VOR or GPS Rwy 19, Amdt 9**

**Note:** The FAA published the following procedure in Docket No. 28863, Amdt. No. 1789 to Part 97 of the Federal Aviation Regulations (Vol 62, No. 68) Page 17067 dated Wednesday, April 9, 1997 under section 97.29 and 97.33 effective April 24, 1997 which are hereby amended to read as follows:

**Newark, NJ, Newark Intl, ILS RWY 22R, Orig**

**Note:** The FAA published the following procedure in Docket No. 28882, Amdt. No. 1792 to Part 97 of the Federal Aviation Regulations (Vol 62, No. 69) Page 17540 dated Thursday, April 10, 1997 under section 97.29 effective May 22, 1997 which is hereby rescinded:

**Montgomery, NY, Orange County, ILS RWY 3, Orig**

**Note:** The FAA published the following procedure in Docket No. 28882, Amdt. No. 1792 to Part 97 of the Federal Aviation Regulations (Vol 62, No. 69) Page 17540 dated Thursday, April 10, 1997 under section 97.23 effective May 22, 1997 which is hereby amended to read as follows:

**Fort Levenworth, KS, Sherman AAF, VOR OR GPS–A, Amdt 3**

[FR Doc. 97–11216 Filed 5–1–97; 8:45 am]

BILLING CODE 4910–13–M

## COMMODITY FUTURES TRADING COMMISSION

## 17 CFR Parts 1, 15, 16 and 17

## Recordkeeping; Reports by Futures Commission Merchants, Clearing Members, Foreign Brokers, and Large Traders

**AGENCY:** Commodity Futures Trading Commission.

**ACTION:** Final rule.

**SUMMARY:** The Commodity Futures Trading Commission (Commission) is amending its regulations to require that futures commission merchants, clearing members and foreign brokers (firms) file options large trader reports with the Commission on a daily basis. The amendments specify a joint options and futures reporting level, a new record format for reporting information in machine-readable form, an earlier time for submission of the data, and a requirement that corrections to previously transmitted data be provided in machine-readable form. The rule amendments more closely align the Commission's reporting rules with those of the exchange and may allow some exchanges to obtain data from the Commission rather than from reporting firms. The proposed amendments deleting from requirement that exchanges file weekly options large trader reports will be made effective after all firms are providing the required reports daily.

The collection of daily options large trader data cannot begin until the Commission has reengineered its data collection system. Since the Commission anticipates completion of the necessary changes by September 1997, it is setting the effective date for the amendments as October 1, 1997. The Commission believes that, by publishing final rules at this time, firms will have ample lead time to make changes to their internal procedures and computer software so that joint testing of Commission and firms software may begin on or shortly after October 1, 1997. Since this testing may take a period of time to complete, the Commission will take no enforcement action during the testing period against

reporting firms if they are not in compliance with the new requirements provided that firms are making a good faith effort to comply and continue in compliance with the reporting rules in effect immediately prior to the adoption of these rules. If the Commission cannot meet its schedule for software development, it may at a later date delay implementation of these rules.

**EFFECTIVE DATE:** October 1, 1997.

**FOR FURTHER INFORMATION CONTACT:** Lamont L. Reese, Commodity Futures Trading Commission, Division of Economic Analysis, Three Lafayette Centre, 1155 21st Street, NW., Washington, DC 20581, telephone (202) 418–5310 or E-mail 1reese@cftc.gov.

**SUPPLEMENTARY INFORMATION:**

## I. Background

The Commission employs a comprehensive market surveillance system which includes an exclusive data-gathering system relying heavily on computer support. Regulations concerning this system require reports from three primary sources: contract markets under Part 16 of the regulations; future commission merchants (FCMs), clearing members, and foreign brokers (firms) under parts 17 and 21 of the regulations; and individual traders under Parts 18 and 19 of the regulations. *See* 17 CFR Parts 16 through 21 (1996).

Part 17 of the Commission's regulations requires that firms submit a daily report to the Commission with respect to futures positions in all special accounts on their books.[1] The regulations also specify the format for data that is reported on machine-readable media and the type of data processing media that is compatible with Commission computer systems.[2] Additionally, firms must file a CFTC form 102 showing the identifying information specified under Section 17.01 of the regulations for each special account, 17 CFR 17.01 (1996). With respect to exchange-traded options, the Commission receives large trader data only on a weekly basis. Part 16 of the regulations requires that contract markets provide the long and short put or call positions for each options trader controlling a reportable position as of the close of business on Tuesday.[3]

Due to the importance of knowing both a trader's open futures and options positions for general and financial surveillance, the Commission proposed rule changes that would require firms to report large trader futures and options positions to the Commission on a daily basis, 61 FR 37409 (July 18, 1996). The proposed amendments included redefining reporting levels, establishing joint reporting of futures and options, changing the current format for reporting data on machine-readable media, and revising the time by which data must be supplied by reporting firms. A number of these rule amendments were intended more closely to align the Commission's and the exchanges' reporting rules, allowing the potential for the Commission to act as a central collection point for large trader data and distribute such data to the exchanges.[4] The Commission also requested comment on matters regarding electronic transmission of data, computerizing its account identification form, and related rule amendments concerning exchange reporting of delta factors and settlement prices.

In addition to the above, the Commission proposed amendments to Parts 18 and 19 of the regulations concerning reports filed by large traders which were unrelated to options large trader reporting. The amendments proposed to Part 18 required that traders who have reportable futures or options positions file a CFTC form 40, ''Statement of Reporting Trader,'' only in response to a special call.[5] The amendments proposed to Part 19 required that traders file cash position reports based on a trader's net futures and option positions. Currently, reporting levels for the cash position reports are based only on a trader's futures positions. The Commission has adopted these amendments in a separate rulemaking.[6]

## II. Discussion of Comments and Final Rules

The Commission received eight comment letters concerning its notice of proposed rulemaking relating to daily option large trader reports. Commenting were the FIA, five exchanges, an FCM, and a service bureau that provides back-office support to reporting firms. In addition, Commission staff met with exchange representatives and attended a meeting of the FIA's operations committee to answer questions about the rule amendment.

### *A. General Considerations.*

Commentors agreed that the Commission needs daily futures and options large trader positions for effective market surveillance and that such data should be reported by firms directly to the Commission rather than the Commission's obtaining the data from the exchanges. In view of this, the Commission has determined to obtain futures and options position data directly from the firms. The Commission also proposed amendments to Part 16 of its regulations that delete the requirement that exchanges provide such data. As explained more fully below, the Commission will adopt as final the amendments to Part 16 after it begins receiving option large trader data from the firms.

Commentors also supported adoption of uniform reporting rules by the exchanges and the Commission. Generally, they believed that such actions would reduce reporting burdens for most firms by eliminating the maintenance costs for the many systems that are currently in place. In commenting on this, the FIA opined that, ''although cost savings to FIA member firms are difficult to quantify with any precision, FIA has no doubt that such savings are real and, over time, will be significant.''

There were, however, significant concerns about the Commission's acting as a central depository for large trader data and distributing such data to the exchanges. These concerns centered around time frames for receipt of the data, control over the process of receiving such data, and accountability of reporting firms to the Commission and the exchanges. Commentors questioned whether the Commission could supply data in accordance with current exchange requirements or on government holidays when the

[1] Special account means any commodity futures or options account in which there is a reportable position, 17 CFR 15.00 (1996). Firms report futures information to the Commission and futures and options information to the exchanges. A reportable position in any open position held or controlled by a trader at the close of business in any one futures contract of a commodity traded on any one contract market that is equal to or in excess of the quantities fixed by the Commission in § 15.03 of the regulations, 17 CFR 15.03 (1996).

[2] *See* rule 17.00(g) for a description of the file characteristics and rule 15.00(1) for a definition of compatible data processing media, 17 CFR 15.00(1) and 17.00(g) (1996).

[3] *See* 17 CFR 16.02 (1996). A reportable options position is defined as any open contract position on any one contract market in the put options or separately in the call options of a specified option expiration date which exceeds 50 contracts, 17 CFR 15.00(b)(2) (1996).

[4] As explained in the **Federal Register** release, firms currently report futures and options data to the exchanges and futures data to the Commission. Using the Commission as a single collection point for large trader data was suggested by reporting firms through operations committees of the Futures Industry Association (FIA) as a means to reduce reporting burdens in the industry, 61 FR 37410 (July 18, 1996).

[5] Under Part 18 of the regulations, traders who become reportable in futures must file a CFTC form 40, ''Statement of Reporting Trader,'' within ten business days following the day that the trader obtains a reportable position. Additional filings are made annually as specified in rule 18.04(d).

[6] *See* 62 FR 6112 February 11, 1997.

exchanges are open. Additionally, they were concerned whether there would be sufficient backup procedures to ensure that data could be supplied to the exchanges in the event of computer problems or communication failures at the firms or the Commission. One commentor noted that cost savings envisioned by this proposal may not materialize if the exchanges must maintain backup procedures with their clearing members.

Although Commission staff will address many of these issues in the course of developing the Commission's surveillance system, the issues may not be resolved to the satisfaction of every exchange. Nevertheless, reporting burdens on the industry can be reduced, as commentors suggested, if the Commission and the exchanges adopt uniform formats for transmitting and uniform rules for reporting large trader data. In this respect, the proposed rules for determining reportability and for reporting appear to be consistent with or satisfactory for use in exchange reporting systems.[7] Similarly, the reporting format proposed by the Commission, with the exception of minor technical amendments discussed below, appears suitable for all exchange reporting systems, and a number of exchanges have stated they plan to adopt it. The Commission believes that significant cost savings and efficiencies can be achieved by reporting firms if all exchanges adopt a common format for reviewing large trader position data. Accordingly, the Commission encourages all exchanges to adopt the format specified in these regulations even if they ultimately choose not to receive their large trader position data from the Commission.[8]

*B. Proposed Formats and Reporting*

Three persons commented on the Commission's proposed amendments to its format for reporting data on machine-readable media. One of the commentors requested that the Commission add a one-character field to designate whether a record submitted by a reporting firm either changed or deleted a previously-transmitted record or represented a new record. The Commission has changed its proposed format in accordance with this request.[9] Another commentor requested that the Commission retain its five-digit designation for reporting firms and its six-digit designation for contract markets. The Commission proposed that firms and contract markets be identified by using exchange-assigned designators. This commentor believed that such a change may minimize programming costs since all firms have programmed Commission codes into their existing systems. This argument is not persuasive. Reporting firms must also program exchange codes in their systems, not only for reporting to the exchanges, but also for clearing transactions. Using Commission-generated codes would require that all exchanges and all firms keep and periodically update tables for Commission codes as well as those assigned by the exchanges. It appears that the reporting burden on the industry is reduced if only exchange codes are used. In addition to the above, the Commission's Office of Information Resources Management has determined there is no need for the Type I record described in proposed regulation 17.00(g)(2)(i). The Commission is therefore amending its proposal to exclude the requirement to submit this record. No suggestions were made for changes to the Commission's proposed amendments to rule 15.00 that define a reportable position or to the proposed amendments to rule 17.00(a) that define the information that must be reported. The Commission therefore is adopting the amendments to rules 15.00 and 17.00(a) as proposed and the amendments to rule 17.00(g) as discussed above.

*C. Transmission of Data*

The Commission requested comment on the potential burden to small firms if all large trader data were required to be reported on machine-readable media. As explained in its notice of proposed rulemaking, a significant number of firms file paper reports. Although the amount of data filed in this form currently is small, this may increase appreciably when the Commission collects option large trader data. Two persons commented on this aspect of the Commission's proposed rulemaking. Both expressed the opinion that no exceptions to electronic reporting be allowed since key entry of paper reports impedes timely access to large trader positions.

Currently, regulation 17.00 requires all firms to file electronically except as otherwise authorized by the Commission or its designee. Previously, exemptions from this requirement were liberally granted because of the relatively high cost for computer hardware and software needed to transmit small amounts of data. Recently, lower costs have made personal computers (PCs) equipped with fax/modems more commonplace for business applications. In this respect, Commission staff are developing a PC based software application that will facilitate data entry for large trader positions. Staff will be contacting firms that currently file manual reports to determine costs a firm may incur to transmit data using a PC and will offer the data entry software free of charge. In light of their findings, determinations will be made on a case-by-case basis whether to require electronic filing.

The Commission also sought comment on how best to define acceptable data processing media. Commission-compatible data processing media is currently defined in rule 15.00(1), but is somewhat outdated. Three persons provided suggestions on this matter. Two of the commentors recommended specific but differing forms of data transmission. The FIA questioned whether it was practical to define this term by regulation since electronic media are evolving at such a rapid pace. The Commission agrees that flexibility is required in this area. Currently, authority is delegated to the Executive Director to approve the use of data processing media other than that specified in rule 15.00(1). *See* 17 CFR 16.07(b) and 17.03(c) (1996). In view of the above, the Commission sees no value in citing specific media as acceptable. The Commission is amending rule 15.00(1) to delete its list of specific media and to define Commission-compatible data processing media to mean media approved by the Commission or its designee. The Executive Director will continue to have delegated authority to define acceptable media.[10]

[7] These rules include proposed amendments to Part 15 that define a reportable position and proposed amendments to Part 17 that require reporting of all futures and options positions if a trader becomes reportable. The Commission did not propose rule amendments that would adjust its reporting levels to those set by the exchanges. Reporting firms can obtain uniformity in this respect by submitting data at the lower of either the exchanges' or the Commission's reporting level. Although the Commission will retain only the data it requires for its purposes, it will have the capability to transmit to an exchange all data pertaining to that exchange that the Commission receives.

[8] Other avenues to reduce reporting burdens will be investigated as well. One commentor suggested, for example, that firms may reduce costs if they can use software already developed sequentially to transmit the same data to different locations.

[9] Use of this field is described more fully below in the discussion on correcting errors.

[10] This delegation of authority is being set forth in revised rule 15.00(1), and conforming amendments are being made to rules 1.31, 16.07(b) and 17.03(c). With the exception of 8 inch magnetic discs, the Commission will continue to accept data on media as currently defined in rule 15.00. No data currently are provided on 8 inch magnetic discs. The Commission will support submission of data on diskettes generated by personal computers and on certain tape cartridges.

*D. Correction of Errors*

The Commission did not address the issue of error correction in its notice of proposed rulemaking. Commission rule 17.00(h) requires that errors and omissions be filed on hard copy forms or computer printouts. One person in commenting requested that dial-up screens and procedures be made available for adjustments to previous transmissions, noting that overlaying previously reported data is costly and time consuming. This commentor noted that corrections are problematic with respect to data for one exchange in particular since the firm's accounting system cannot handle the exchange's timetable for processing data on those weekends that options expire.

Generally, the Commission receives few, if any, corrections to position data resulting from adjustments for deliveries or option expirations that occur over a weekend. The Commission expects that such adjustments will be reflected in changes to traders' positions as of the close of business on the next business day. Similarly, the Commission expects that changes to open interest resulting from such adjustments will be reflected in the open interest published for the next business day. Adjusting positions otherwise may be unique to a particular exchange.

As noted above, the Commission is designating a field in its reporting format that may be used by firms to specify certain records they submit as changes or deletions to previously transmitted records. Rule 17.00(h) must also be amended if corrections are to be made on machine-readable media. In order to limit the number of paper reports filed by firms, the Commission is amending rule 17.00(h) to require that corrections to previously filed reports be submitted in machine-readable form using the format specified in rule 17.00(g) unless otherwise authorized by the Commission or its designee.[11] The amended rule 17.00(h) requires that, when deleting a record, firms supply all information contained on the previously submitted record with a ''D'' in the eightieth column. When changing a record, firms must supply the information that changed as well as all other information on the record that was previously submitted either leaving the eightieth column blank or inserting a ''C''. Commission staff will consider the need for additional means to correct errors in its dealings with individual exchanges on issues related to providing them with large trader data.

*E. Electronic Transmission of Account Identification Information*

Commission regulations require that firms identify all special accounts on a CFTC form 102. Under current regulations, initial identifying information must be provided on call by the Commission when the account is first reported, and a completed form 102 must then be filed within three business days. *See* 61 FR 6310 (February 20, 1996). The Commission recognized in its notice of proposed rulemaking that supplying this information was burdensome since firms must submit this form to multiple regulators for each special account they report. The Commission noted, however, that two exchanges, the Chicago Board of Trade (CBT) and the Chicago Mercantile Exchange, have or are in the process of providing means for electronic transmission of this information. The Commission requested comment on either of the exchanges' approach or other viable alternatives that might reduce burdens associated with reporting this information. Two persons, including the CBT, submitted comments concerning this matter.

The CBT recommended that the Commission's proposed record format be altered to include the name, address and type of newly reported accounts. This is similar to the CBT's current system for account identification wherein reporting firms provide partial account identification information on two records which are transmitted electronically. The CBT offered access to its personal information program that insures the receipt of appropriate data suggesting this could be used as an interim system until programs for submissions of electronic form 102s are fully operational. Adoption of a system similar to that of the CBT would save processing costs for the Commission since it now receives similar limited information by telephone or facsimile and key-enters the data. Commission staff will more fully investigate the operation of the CBT's system. The Commission, however, will consider changes to its regulations for obtaining account identification information only after it begins collecting daily option large trader data.

*E. Time and Place for Filing Reports*

The Commission proposed amending rule 17.02 to require that firms file large trader position reports earlier than is currently required. In proposing this amendment, the Commission noted that exchanges currently impose an earlier filing time than the Commission and that the Commission's market surveillance program would benefit if the reports were received earlier. To align its reporting rules more closely with those of the exchanges, the Commission proposed that all large trader reports be submitted by 9:00 a.m. or at such earlier time as specified by an exchange that is receiving data from the Commission for contract markets on that exchange.[12]

Several exchanges commented about time frames for filing large trader reports, expressing concern that, if the Commission acts as a central depository, they continue to receive large trader data in a timely fashion. In meetings with Commission staff, members of the FIA questioned whether it was appropriate to make it a violation of Commission regulations if firms did not submit reports within earlier deadlines set by exchanges.

Many issues remain if the Commission is to distribute large trader data to the exchanges. Whether the Commission can supply data in the time frame required by any particular exchange can only be answered after the Commission begins testing data transfers. At that time the Commission and the exchanges can jointly determine procedures that may be necessary to ensure the timeliness of large trader data. In view of this, the Commission is amending its proposal to require only that data be supplied to the Commission by 9:00 a.m. Since there were no objections to this 9:00 a.m. filing time, the Commission is adopting its proposal as amended. This rule does not preclude exchanges' requiring their members to submit large trader data to the Commission earlier so they may, in turn, receive it earlier from the Commission. The Commission anticipates that assuring the timeliness and completeness of large trader reporting by exchange members will be a shared Commission/exchange responsibility if exchanges determine to receive data from the Commission.

In addition to specifying the time that reports must be filed, Rule 17.02 specifies the location where various electronic media can be routinely filed. Currently, rule 17.02 allows data to be submitted via dial-up transmission only at the Chicago Regional Office, data to be submitted via magnetic tape at either the New York or Chicago Regional Office and data to be submitted by magnetic diskette at the Kansas City,

[11] As with the information provided under rule 17.00(a), the Commission is delegating authority to the Director of the Division of Economic Analysis to determine if firms will be allowed to report data under rule 17.00(h) on hard copy forms or printouts. Rule 17.03 is being amended to effect this delegation.

[12] Times refer to eastern times for markets located in that time zone and central time for all other markets.

Chicago, or New York Regional Office. Hardware to support these functions must be purchased, maintained and operated at the appropriate locations. In this respect, the Commission must purchase new tape readers as part of its reengineering project.

At the current time, no exchanges or firms routinely submit data on magnetic tape at the New York Regional Office. In view of the costs involved, the Commission has determined that it will not purchase a new tape reader to allow routine submissions of large trader data on magnetic tape (reel or cartridge) at its New York Regional Office. Back-up facilities will be maintained in this office for such media in the event that firms or exchanges cannot transmit data. The Commission is amended Rule 17.02 to reflect this determination.

The Commission has determined that the Administrative Procedure Act, 5 U.S.C. 553(b)(1994), does not require notice of proposed rulemaking and an opportunity for public participation in connection with the adoption of this amendment. In this regard, the Commission notes that such notice and opportunity for comment is unnecessary because this rule amendment relates solely to agency procedure or practice, does not establish any new obligations under the Commodity Exchange Act and does not affect the current reporting by any firm. Moreover, the expenditure of funds to support an unused method of reporting would appear to be contrary to the public interest. In any event, the Commission will have equipment available for non-routine processing of magnetic tape.

Although this rule amendment is being promulgated as a final rule, the Commission nevertheless will consider comments from interested persons concerning this amendment within 60 days of publication in the **Federal Register**. Comments should be mailed to the Commodity Futures Trading Commission, Three Lafayette Centre, 1155 21st Street, NW., Washington, D.C. 20581, attention: Office of the Secretariat or send via E-mail to secretariat@cftc.gov and should make reference to ''Option Large Trader Reports''.

*F. Other Exchange Reporting*

The Commission proposed amendments to rules 16.00 and 16.01 under which exchanges make reports concerning clearing member activity and provide market statistics. *See* 17 CFR 16.00 and 16.01 (1996). The proposed amendments require that exchanges provide option and futures market settlement prices and option delta factors by 7:00 a.m. on the business day following the report date for the data.[13] Currently, the data are not provided until 3:00 p.m. of the day following the report day. The Commission also proposed to delete the requirement that exchanges provide the number of options exercised and assigned and the number expiring unexercised. Last, the Commission proposed that the current practice of the exchanges in providing information concerning first notice day and last trading day for futures contracts and expiration date for options contracts be set forth as a requirement under rule 16.01. There were no objections to adoption of these proposals. In view of this, the Commission is adopting the amendments to rules 16.00 and 16.01 as proposed.

*G. Implementation Schedule*

As noted above, the Commission is in the process of obtaining new hardware and reengineering its market surveillance software to accommodate the receipt and processing of daily option large trader data. This involves a lengthy time period during which internal software requirements will be defined and the software developed and tested. It is only after these tasks are completed that the Commission can begin receiving data from firms on a routine basis. Since the Commission expects that its software development and internal testing will be completed by the end of September 1997, it is setting an effective date of October 1, 1997, for these rules. However, at this time the Commission cannot be certain of this timetable for completion. For this reason, the Commission may at a later date delay implementation of these rules.

Reporting firms must also develop software for the new format specified in Part 17. Such software and the Commission's software must be jointly tested to ensure that data can be received and processed. Since joint testing may not begin until after the effective date of these rules and since firms must be dealt with on an individual basis, this process will require some period of time beyond October 1, 1997, before all firms are in compliance with the new rules. In view of this, until the testing is complete, the Commission will take no enforcement action against a firm if it is not in compliance with the new rules by October 1, 1997, provided that the firm is making a good faith effort to comply with the new rules and, until testing is completed, continues in compliance with the reporting rules in effect immediately prior to the adoption of these new rules.

During this period of testing, the Commission will continue to receive weekly option large trader reports from the exchanges. After the Commission is receiving all daily option large trader reports from firms, it will undertake a final rule making concerning its proposed amendments to Part 16 that delete the requirement that exchanges provide such data. Since firms may be providing daily options large trader data for an exchange or all exchanges prior to the effective data of the amendments to Part 16, the Commission will take no enforcement action against an exchange for not providing weekly option large trader date if it makes a finding that firms are providing such data for contract markets on the exchange. The Commission is delegating to the Director of the Division of Economic Analysis the authority to make the necessary findings and determinations concerning reporting by firms.

## III. Other Related Matters

*A. The Regulatory Flexibility Act*

The Regulatory Flexibility Act (RFA) 5 U.S.C. 601 *et seq.*, requires that agencies consider the impact of these rules on small businesses. The Commission has previously determined that large traders and futures commission merchants are not ''small entities'' for purposes of the Regulatory Flexibility Act, 47 FR 18618–18621 (April 30, 1982). Therefore, the Chairperson, on behalf of the Commission, hereby certifies, pursuant to 5. U.S.C. 605(b), that the action taken herein will not have a significant economic impact on a substantial number of small entities.

*B. Paperwork Reduction Act (PRA)*

When publishing final rules, the Paperwork Reduction Act of 1995 (Pub. L. 104–13 (May 13, 1995)) imposes certain requirements on federal agencies (including the Commission) in connection with their conducting or sponsoring any collection of information as defined by the Paperwork Reduction Act. In compliance with the Act, these final rules and/or their associated information collection requirements inform the public of:

''(1) the reasons the information is planned to be and/or has been collected; (2) the way such information is planned to be and/or has been used to further the proper performance of the functions of the agency; (3) and estimate, to the extent practicable, of the average burden of the collection (together with a request that the public direct to the

[13] The report date is the business day to which the data pertains.

agency any suggestions for reducing this burden); (4) whether responses to the collection of information are voluntary, required to obtain or retain a benefit, or mandatory; (5) the nature and extent of confidentiality to be provided, if any; and (6) the fact that an agency may not conduct or sponsor, and a person is not required to respond to, a collection of information unless it displays a currently valid OMB control number.''

The Commission previously submitted these rules in proposed form and their associated information collection requirements to the Office of Management and Budget. The Office of Management and Budget approved the collection of information associated with these rules on November 26, 1996, and assigned OMB control number 3038–0009 to the rules. The burden associated with the entire collection, including these final rules, is as follows:

*Average burden hours per response:* 0.3607.

*Number of Respondents:* 6181.

*Frequency of response:* Daily.

The burden associated with these specific final rules, is as follows:

*Average burden hours per response:* .3264.

*Number of Respondents:* 585.

*Frequency of response:* Daily.

Persons wishing to comment on the information required by these final rules should contact the Desk Officer, CFTC, Office of Management and Budget, Room 10202, NEOB, Washington, DC 20503, (202) 395–7340. Copies of the information collection submission to OMB are available from the CFTC Clearance Officer, 1155 21st Street, NW, Washington, DC 20581, (202) 418–5160.

**List of Subjects**

*17 CFR Part 1*

Reporting and recordkeeping requirements.

*17 CFR Part 15*

Brokers, Reporting and recordkeeping requirements.

*17 CFR Part 16*

Commodity futures, Reporting and recordkeeping requirements.

*17 CFR Part 17*

Brokers, Commodity futures, Reporting and recordkeeping requirements.

In consideration of the foregoing, and pursuant to the authority contained in the Commodity Exchange Act (Act) and, in particular, sections 4g, 4i, 5 and 8a of the Act, 7 U.S.C. 6g, 6i, 7 and 12a (1994), the Commission hereby amends chapter I of title 17 of the Code of Federal Regulations as follows:

## PART 1—GENERAL REGULATIONS UNDER THE COMMODITY EXCHANGE ACT

1. The authority citation for part 1 continues to read as follows:

**Authority:** 7 U.S.C. 2, 2a, 4, 4a, 6, 6a, 6b, 6c, 6d, 6f, 68, 6h, 6i, 6k, 6l, 6m, 6n, 6o, 7, 7a, 7b, 8, 9, 12, 12a, 13a, 13a–1, 16, 16a, 19, 21, and 24, unless otherwise noted.

2. Section 1.31 is amended by revising paragraphs (c)(1)(iii) and (c)(3) to read as follows:

### § 1.31 Books and records; keeping and inspection.

* * * * *

(c) * * *

(1) * * *

(iii) If the records are preserved on optical disk, facilities for immediately producing complete, accurate and easily readable hard copies of the records and the means to provide, immediately upon request, any Commission or Department of Justice representative with copies of the records on Commission compatible machine-readable media as defined in § 15.00(l)(1) of this chapter.

* * * * *

(3) Be ready at all times to provide, and immediately provide at the expense of the person required to keep such records, any hard copy or facsimile enlargement of such records, and for records stored on optical disk, copies of such records on approved machine-readable media as defined in § 15.00(l)(1) of this chapter which any representative of the Commission or U.S. Department of Justice may request. Records on machine-readable media must use a format and coding structure specified in the request; and

* * * * *

## PART 15—REPORTS—GENERAL PROVISIONS

3. The authority citation for part 15 continues to read as follows:

**Authority:** 7 U.S.C. 2, 4, 5, 6a, 6c(a)—(d), 6f, 6g, 6i, 6k, 6m, 6n, 7, 9, 12a, 19 and 21; 5 U.S.C. 552 and 552(b).

4. Section 15.00 is amended by revising paragraphs (b) and (1) to read as follows:

### § 15.00 Definitions of terms used in parts 15 to 21 of this chapter.

* * * * *

(b) *Reportable position* means:

(1) For reports specified in Parts 17, 18 and § 19.00(a)(2) and (a)(3) of this chapter any open contract position that at the close of the market on any business day equals or exceeds the quantity specified in § 15.03 of this part in either:

(i) Any one future of any commodity on any one contract market, excluding future contracts against which notices of delivery have been stopped by a trader or issued by the clearing organization of a contract market; or

(ii) Long or short put or call options that exercise into the same future of any commodity on any one contract market.

(2) For the purposes of reports specified in § 19.00(a)(1) of this chapter, any combined futures and futures-equivalent option open contract position as defined in part 150 of this chapter in any one month or in all months combined, either net long or net short in any commodity on any one contract market, excluding futures positions against which notices of delivery have been stopped by a trader or issued by the clearing organization of a contract market, which at the close of the market on the last business day of the week exceeds the net quantity limit in spot, single or in all-months fixed in § 150.2 of this chapter for the particular commodity and contract market.

* * * * *

(1) *Compatible data processing media.* This term means data processing media approved by the Commission or its designee. The Commission hereby delegates, until the Commission orders other-wise, the authority to approve data processing media for data submissions to the Executive Director to be exercised by such Director or by such other employee or employees of such Director as designated from time to time by the Director. The Executive Director may submit to the Commission for its consideration any matter which has been delegated in this paragraph. Nothing in this paragraph prohibits the Commission, at its election, from exercising the authority delegated in this paragraph.

## PARTS 16—REPORTS BY CONTRACT MARKETS

5. The authority citation for part 16 continues to read as follows:

**Authority:** 7 U.S.C. 6a, 6c, 6g, 6i, 7 and 12A.

6. Section 16.00 is amended by revising paragraph (a)(5) to read as follows:

### § 16.00 Clearing member reports.

(a) * * *

(5) For futures, the quantity of the commodity for which delivery notices have been issued by the clearing organization of the contract market and the quantity for which notices have been stopped during the day covered by the report.

* * * * *

7. Section 16.01 is amended by revising the heading, removing paragraphs (a)(5) and (a)(6) and redesignating paragraph (a)(7) as (a)(5); by redesignating paragraph (c) as paragraph (b)(3); and by adding a new paragraph (c) and revising paragraph (d) to read as follows:

**§ 16.01 Trading volume, open contracts, prices and critical dates.**

* * * * *

(c) *Critical dates.* Each contract market shall report to the Commission for each futures contract the first notice date and the last trading date and for each option contract the expiration date in accordance with paragraph (d) of this section.

(d) *Reports to the Commission.* Unless otherwise approved by the Commission or its designee, contract markets shall submit the information specified in paragraphs (a), (b) and (c) of this section as follows:

(1) Using a format and coding structure approved in writing by the Commission or its designee in both hard-copy form and on compatible data processing media;

(2) When each such form of the data is first available but not later than 7:00 a.m. on the business day following the day to which the information pertains for the delta factor and settlement price and not later than 3:00 p.m. for the remainder of the information; and

(3) Except for dial-up data transmission, at the regional office of the Commission having local jurisdiction with respect to such contract market.

8. Section 16.06 is revised to read as follows:

**§ 16.06 Errors or omissions.**

Contract markets shall file with the Commission on compatible data processing media using a format and coding structure approved by the Commission or its designee, corrections to errors or omissions in data previously filed with the Commission pursuant to §§ 16.00 and 16.01.

9. Section 16.07 is revised to read as follows:

**§ 16.07 Delegation of authority to the Director of the Division of Economic Analysis and the Executive Director.**

The Commission hereby delegates, until the Commission orders otherwise, the authority set forth in paragraph (a) of this section to the Director of the Division of Economic Analysis and the authority set forth in paragraph (b) of this section to the Executive Director to be exercised by such director or by such other employee or employees of such director as may be designated from time to time by the director. The Director of the Division of Economic Analysis or the Executive Director may submit to the Commission for its consideration any matter which has been delegated in this paragraph. Nothing in this paragraph prohibits the Commission, at its election, from exercising the authority delegated in this paragraph.

(a) Pursuant to §§ 16.00(b) and 16.01(d), the authority to determine whether contract markets must submit data in machine-readable form or hard-copy or both, and the time and Commission office at which such data may be submitted where the director determines that a contract market is unable to meet the requirements set forth in the regulations.

(b) Pursuant to §§ 16.00(b)(1), 16.01(d)(1), and 16.06, the authority to approve the format and coding structure used by contract markets.

## PART 17—REPORTS BY FUTURES COMMISSION MERCHANTS, MEMBERS OF CONTRACT MARKETS AND FOREIGN BROKERS

11. The authority citation for part 17 continues to read as follows:

**Authority:** 7 U.S.C. 6a, 6c, 6d, 6f, 6g, 68, 7 and 12a unless otherwise noted.

12. Section 17.00 is amended by revising paragraphs (a), (d), (e), and (g) to read as follows:

**§ 17.00 Information to be furnished by futures commission merchants, clearing members and foreign brokers.**

(a) *Special Accounts—Reportable futures and options positions, delivery notices and exchanges of futures for cash.* Each futures commission merchant, clearing member and foreign broker shall submit a report to the Commission for each business day with respect to all special accounts carried by the futures commission merchant, clearing member or foreign broker, except for accounts carried on the books of another futures commission merchant on a fully-disclosed basis. Except as otherwise authorized by the Commission or its designee, such report shall be made on compatible data processing media in accordance with the format and coding provisions set forth in paragraph (g) of this section. The report shall show each futures position, separately for each contract market and for each future, and each put and call options position separately for each contract market, expiration and strike price in each special account as of the close of market on the day covered by the report and, in addition, the quantity of exchanges of futures for physicals and the number of delivery notices issued for each such account by the clearing organization of a contract market and the number stopped by the account.

(2) A report covering the first day upon which a special account is no longer reportable shall also be filed showing the information specified in paragraph (a)(1) of this section.

* * * * *

(d) *Net positions.* Futures commission merchants, clearing members and foreign brokers shall report positions net long or short in each future of a commodity and each strike price of a put or call option for each expiration month in all special accounts, except as specified in paragraph (e) of this section.

(e) *Gross positions.* In the following cases, the futures commission merchant, clearing member or foreign broker shall report gross long and short positions in each future of a commodity and each strike price of a put or call option for each expiration month in all special accounts:

(1) Positions which are reported to an exchange or the clearinghouse of an exchange on a gross basis, which the exchange uses for calculating total open interest in a commodity;

(2) Positions in accounts owned or held jointly with another person or persons;

(3) Positions in multiple accounts subject to trading control by the same trader; and

(4) Positions in omnibus accounts.

* * * * *

(g) *Media and file characteristics.* (1) Except as otherwise approved by the Commission or its designee, all required records shall be submitted together in a single file. Each record will be 80 characters long. The specific record format is shown in the table below:

RECORD LAYOUT

| Beginning column | Length | Type [1] | Name |
|---|---|---|---|
| 1 | 2 | AN | Report Type. |
| 3 | 3 | AN | Reporting Firm. |

RECORD LAYOUT—Continued

| Beginning column | Length | Type [1] | Name |
|---|---|---|---|
| 6 | 2 | | Reserved. |
| 8 | 12 | AN | Account Number. |
| 20 | 8 | AN | Report Date. |
| 28 | 2 | AN | Exchange Code. |
| 30 | 1 | AN | Put or Call. |
| 31 | 5 | AN | Commodity Code (1). |
| 36 | 8 | AN | Expiration Date (1). |
| 44 | 7 | S | Strike Price. |
| 51 | 1 | AN | Exercise Style. |
| 52 | 7 | N | Long—Buy—Stopped. |
| 59 | 7 | N | Short—Sell—Issued. |
| 66 | 5 | AN | Commodity Code (2). |
| 71 | 8 | AN | Expiration Date (2). |
| 79 | 2 | | Reserved. |
| 80 | 1 | AN | Record Type. |

[1] AN—Alpha—numeric, N—Numeric, S—Signed numeric.

(2) Field definitions are as follows:

(i) *Report Type.* This report format will be used to report three types of data: long and short futures and options positions, futures delivery notices issued and stopped, and exchanges of futures for physicals bought and sold. Valid values for the report type are ''RP'' for reporting positions, ''DN'' for reporting notices, and ''EP'' for reporting exchanges of futures for physicals.

(ii) *Reporting Firm.* The clearing member number assigned by an exchange or clearing house to identify reporting firms. If a firm is not a clearing member, a three-character alpha-numeric identifier assigned by the Commission.

(iii) *Account Number.* A unique identifier assigned by the reporting firm to each special account. The field is zero filled with account number right-justified. Assignment of the account number is subject to the provisions of §§ 17.00 (b) and (c) and 17.01(a).

iv. *Report Date.* The format is YYYYMMDD, where YYYY is the year, MM is the month, and DD is the day of the month.

(v) *Exchange.* This is a two-character field used to identify the exchange on which a position is held. Valid values are as follows:

01 Chicago Board of Trade
02 Chicago Mercantile Exchange
03 MidAmerica Commodity Exchange
06 Coffee, Sugar and Cocoa Exchange
07 Comex Division of NYMEX
08 Kansas City Board of Trade
09 Minneapolis Grain Exchange
10 Philadelphia Board of Trade
12 New York Mercantile Exchange
13 New York Cotton Exchange
15 New York Futures Exchange

(vi) Valid values for this field are ''C'' for a call option and ''P'' for a put option. For futures, the field is blank.

(vii) *Commodity* (1). An exchange-assigned commodity code for the futures or options contract.

(viii) *Expiration Date* (1). The date format is YYYYMMDD and represents the expiration date or delivery date of the reported futures or options contract. For date-specific instruments such as flexible products, the full date must be reported. For other options and futures, this field is used to report the expiration year and month for an options contract or a delivery year and month for a futures contract. The day portion of the field for these contracts contains spaces.

(ix) *Strike Price.* This is a signed numeric field for reporting options strike prices. The strike prices should be right-justified and the field zero-filled. Strike prices must be reported in the same formats that are used by an exchange. For futures, the field is left blank.

(x) *Exercise Style.* Valid values for this field are ''A'' for American style options, i.e., those that can be exercised at any time during the life of the options; and ''E'' for European, i.e., those that can be exercised only at the end of an option's life. This field is required only for flexible instruments or as otherwise specified by the Commission.

(xi) *Long-Buy-Stopped (Short-Sell-Issued).* When report type is ''RP'', report long (short) positions open at the end of a trading day. When report is ''DN'', report delivery notices stopped (issued) on behalf of the account. When report type is ''EP'', report purchases (sales) of futures for cash for the account. Report all information in contracts. Position data are reported on a net or gross basis in accordance with paragraphs (e) and (d) of this section.

(xii) *Commodity* (2). The exchange assigned commodity code for a futures contract or other instrument that a position is exercised into from a date-specific or flexible option.

(xiii) *Expiration Date* (2). Similar to other dates, the format is YYYYMMDD and represents the expiration date or delivery month and year of the future or other instrument that a position is exercised into from a date-specific or flexible option.

(xiv) *Record Type* (1). Record type is used to correct errors or delete records that have previously been submitted. Valid values are ''A'', ''C'', ''D'' or ''blank''. An A or ''blank'' is used in this field for all new records. If the record corrects information for a previously provided record, this field must contain a ''C'' or ''blank'' and the record must contain all information on the previously transmitted record. If the record deletes information on a previously provided record, this field *must* contain a ''D'' and all information on the previously transmitted record.

* * * * *

12. Section 17.02 is amended by revising paragraph (a) as follows:

**§ 17.02 Place and time of filing reports.**

* * * * *

(a) For data submitted on compatible data processing media:

(1) At the Chicago Regional Office for dial-up data transmission or magnetic tape; and at the Chicago, New York or Kansas City Regional Office for magnetic diskettes.

(2) Not later than 9 a.m. on the business day following that to which the information pertains.

* * * * *

13. Section 17.03 is revised to read as follows:

**§ 17.03 Delegation of authority to the Director of the Division of Economic Analysis and to the Executive Director.**

The Commission hereby delegates, until the Commission orders otherwise, the authority set forth in paragraphs (a) and (b) of this section to the Director of the Division of Economic Analysis and the authority set forth in paragraph (c) of this section to the Executive Director to be exercised by such Director or by such other employee or employees of such Director as designated from time to time by the Director. The Director of the Division of Economic Analysis or the Executive Director may submit to the Commission for its consideration any matter which has been delegated in this paragraph. Nothing in this paragraph prohibits the Commission, at its election, from exercising the authority delegated in this paragraph.

(a) Pursuant to §§ 17.00 (a) and (h), the authority to determine whether futures commission merchants, clearing members and foreign brokers can report the information required under Rule 17.00(a) and Rule 17.00(h) on series '01 forms or updated Commission supplied computer printouts upon a determination by the Director that such person technologically is unable to provide such information on compatible data processing media.

(b) Pursuant to § 17.02, the authority to instruct and/or to approve the time and Commission office at which the information required under Rules 17.00 and 17.01 must be submitted by futures commission merchants, clearing members and foreign brokers provided that such persons are unable to meet the requirements set forth in § 17.01; and

(c) Pursuant to § 17.00(a), the authority to approve a format and coding structure other than that set forth in § 17.00(g).

14. Section 17.04 is amended by revising paragraph (a) and the introductory text of paragraph (b) to read as follows:

**§ 17.04 Reporting omnibus accounts to the carrying futures commission merchant or foreign broker.**

(a) Any futures commission merchant, clearing member or foreign broker who establishes an omnibus account with another futures commission merchant or foreign broker shall report to that futures commission merchant or foreign broker the total open long positions and the total open short positions in each future of a commodity and, for commodity options transactions, the total open long put options, the total open short put options, the total open long call options, and the total open short call options for each commodity options expiration date and each strike price in such account at the close of trading each day. The information required by this section shall be reported in sufficient time to enable the futures commission merchant or foreign broker with whom the omnibus account is established to comply with part 17 of these regulations and reporting requirements established by the contract markets.

(b) In determining open long and open short futures positions, and open purchased long and open granted short option positions, in an omnibus account for purposes of complying with § 17.00(f), § 1.37(b) and § 1.58 of this chapter, a futures commission merchant, clearing member or foreign broker shall total the open long positions of all traders and the open short positions of all traders in each future of a commodity and, for commodity options transactions, shall total the open long put options, the open short put options, the open long call options, and the open short call options of all traders for each commodity option expiration date and each strike price. The futures commission merchant, clearing member or foreign broker shall, if both open long and short positions in the same future are carried for the same trader, compute open long or open short futures positions as instructed below.

* * * * *

Issued in Washington, DC., April 25, 1997, by the Commission.

**Jean A. Webb,**

*Secretary of the Commission.*

[FR Doc. 97–11396 Filed 5–1–97; 8:45 am]

BILLING CODE 6351–01–M

---

## DEPARTMENT OF DEFENSE

## Department of the Army, Corps of Engineers

## 33 CFR Part 334

## Danzer Zones and Restricted Areas

**AGENCY:** U.S. Army Corps of Engineers, DoD.

**ACTION:** Final rule; correction.

**SUMMARY:** This document contains corrections to the final regulation which was published on April 10, 1997, (62 FR 17550–17559). The original document contained several errors which are corrected and § 334.1110 was inadvertently amended. This document removes that amendment.

**EFFECTIVE DATE:** May 12, 1997.

**FOR FURTHER INFORMATION CONTACT:** Mr. Ralph Eppard, Regulatory Branch, CECW–OR at (202) 761–1783.

**SUPPLEMENTARY INFORMATION:**

1. The Corps published a final rule in the August 27, 1996 **Federal Register** (61 FR 43969) which amended § 334.1110, and in the final rule (62 FR 17550–17559) published in the **Federal Register** on April 10, 1997, we inadvertently made similar changes to § 334.1110. This correction removes the amendment made on April 10, 1997.

**§ 334.1110 [Corrected]**

On page 17558, in the first column, remove amendatory instruction #78 and the amendments to § 334.1110.

2. In addition, we are making the following corrections:

**§ 334.310 [Corrected]**

On page 17553, in the first column, in paragraph (b)(2) of § 334.310 in the second line, the reference to ''within 300 years of any naval vessel'' is corrected to read ''within 300 yards of any naval vessel''.

**§ 334.670 [Corrected]**

On page 17555, in the first column, in paragraph (b)(2) of § 334.670, in the seventh line, correct ''warming'' to read ''warning''.

**§ 334.730 [Corrected]**

On page 17555, in the center column, in paragraph (b)(2) of § 334.730, in the fourth line, correct ''Intracostal'' to read ''Intracoastal''.

**§ 334.750 [Corrected]**

On page 17555, in the third column, in paragraph (b)(1) of § 334.750, in the first line, capitalize the ''N'' in the word ''No''.

**§ 334.960 [Corrected]**

On page 17557, in the first column, in paragraph (b)(4) of § 334.960, correct the sentence by inserting the word ''area'', between the words ''the'' and ''immediately''.

**§ 334.1410 [Corrected]**

On page 17559, in the center column, in paragraph (b)(1) of § 334.1410, correct the sentence by inserting the word ''of'' between ''display'' and ''signals''.

**§ 334.1450 [Corrected]**

On page 17559, in the center column, in paragraph (b)(1) of § 334.1450, in the eighth line, correct the word ''with'' to read ''within''.

Dated: April 23, 1997.

For The Commander.

Approved:

**Charles M. Hess,**

*Chief, Operations, Construction and Readiness Division, Directorate of Civil Works.*

[FR Doc. 97–11394 Filed 5–1–97; 8:45 am]

BILLING CODE 3710–92–M

## ENVIRONMENTAL PROTECTION AGENCY

## 40 CFR Part 52

**[Region II Docket No. NJ26–2–165, FRL–5813–9]**

## Approval and Promulgation of Implementation Plans; New Jersey; Consumer and Commercial Products Rule

**AGENCY:** Environmental Protection Agency (EPA).

**ACTION:** Final rule.

**SUMMARY:** The EPA is announcing the approval of a revision to the New Jersey State Implementation Plan (SIP) for the attainment and maintenance of the national ambient air quality standards for Ozone. The SIP revision was submitted by the New Jersey Department of Environmental Protection and consists of the adopted new rule Subchapter 24, ''Control and Prohibition of Volatile Organic Compounds (VOCs) from Consumer and Commercial Products,'' which establishes limits on the amount of VOCs contained in certain consumer and commercial products. The intended effect is to reduce the emission of VOCs released to the atmosphere which will assist in attaining the health based ozone air quality standard.

**EFFECTIVE DATE:** This rule will be effective June 2, 1997.

**ADDRESSES:** Copies of New Jersey's submittal are available at the following addresses for inspection during normal business hours:

Environmental Protection Agency, Region 2 Office, Air Programs Branch, 290 Broadway, 25th Floor, New York, New York 10007–1866.

New Jersey Department of Environmental Protection, Office of Air Quality Management, Bureau of Air Pollution Control, 401 East State Street, CN027, Trenton, New Jersey 08625.

Environmental Protection Agency, Air and Radiation Docket and Information Center, Air Docket (6102), 401 M Street, S.W., Washington, D.C. 20460.

**FOR FURTHER INFORMATION CONTACT:** Kirk J. Wieber, Environmental Engineer, Air Programs Branch, Environmental Protection Agency, 290 Broadway, 25th Floor, New York, New York 10007–1866, (212) 637–4249.

**SUPPLEMENTARY INFORMATION:** On January 21, 1997 (62 FR 2984) EPA published, in the **Federal Register**, a proposed approval of a request by the State of New Jersey to revise its State Implementation Plan (SIP) for ozone. This revision to the New Jersey Ozone SIP added Subchapter 24, ''Control and Prohibition of Volatile Organic Compounds from Consumer and Commercial Products,'' of New Jersey Administrative Code (N.J.A.C) of 7:27–24. This new rule was adopted by New Jersey on October 3, 1995 and became effective upon publication in the New Jersey Register on November 6, 1995.

The revisions and rationale for EPA's approval and rulemaking actions were explained in the January 21, 1997 proposal and will not be restated here. The reader is referred to the proposal for a detailed explanation of New Jersey's SIP revision. In response to EPA's proposed approval of New Jersey's SIP revision, no comments were received.

### Conclusion

EPA is approving the adoption of new rule Subchapter 24, ''Control and Prohibition of Volatile Organic Compounds from Consumer and Commercial Products'' into the New Jersey SIP for the attainment and maintenance of the national ambient air quality standards for Ozone.

Nothing in this action should be construed as permitting or allowing or establishing a precedent for any future request for revision to any SIP. Each request for revision to the SIP shall be considered separately in light of specific technical, economic, and environmental factors and in relation to relevant statutory and regulatory requirements.

### Administrative Requirements

*Executive Order 12866*

This action has been classified as a Table 3 action for signature by the Regional Administrator under the procedures published in the **Federal Register** on January 19, 1989 (54 FR 2214–2225), as revised by a July 10, 1995 memorandum from Mary Nichols, Assistant Administrator for Air and Radiation. The Office of Management and Budget has exempted this regulatory action from E.O. 12866 review.

### Regulatory Flexibility Act

Under the Regulatory Flexibility Act, 5 U.S.C. 600 *et seq.*, EPA must prepare a regulatory flexibility analysis assessing the impact of any proposed or final rule on small entities. 5 U.S.C. 603 and 604. Alternatively, EPA may certify that the rule will not have a significant impact on a substantial number of small entities. Small entities include small businesses, small not-for-profit enterprises, and government entities with jurisdiction over populations of less than 50,000.

SIP approvals under section 110 and subchapter I, part D of the Clean Air Act (Act) do not create any new requirements but simply approve requirements that the state is already imposing. Therefore, because the federal SIP approval does not impose any new requirements, I certify that it does not have a significant impact on any small entities affected. Moreover, due to the nature of the Federal-State relationship under the Act, preparation of a flexibility analysis would constitute federal inquiry into the economic reasonableness of state action. The Act forbids EPA to base its actions concerning SIPs on such grounds. *Union Electric Co.* v. *U.S. EPA*, 427 U.S. 246, 255–66 (1976); 42 U.S.C. 7410(a)(2).

### Unfunded Mandates

Under section 202 of the Unfunded Mandates Reform Act of 1995 (''Unfunded Mandates Act''), signed into law on March 22, 1995, EPA must prepare a budgetary impact statement to accompany any proposed or final rule that includes a Federal mandate that may result in estimated annual costs to state, local, or tribal governments in the aggregate; or to the private sector, of $100 million or more. Under Section 205, EPA must select the most cost-effective and least burdensome alternative that achieves the objectives of the rule and is consistent with statutory requirements. Section 203 requires EPA to establish a plan for informing and advising any small governments that may be significantly or uniquely impacted by the rule.

EPA has determined that the approval action promulgated does not include a federal mandate that may result in estimated annual costs of $100 million or more to either state, local, or tribal governments in the aggregate, or to the private sector. This federal action approves pre-existing requirements under state or local law, and imposes no new requirements. Accordingly, no additional costs to state, local, or tribal governments, or to the private sector, result from this action.

### Submission to Congress and the General Accounting Office

Under 5 U.S.C. 801(a)(1)(A) as added by the Small Business Regulatory Enforcement Fairness Act of 1996, EPA

submitted a report containing this rule and other required information to the U.S. Senate, the U.S. House of Representatives and the Comptroller General of the General Accounting Office prior to publication of the rule in today's **Federal Register**. This rule is not a ''major rule'' as defined by 5 U.S.C. 804(2).

### Petitions for Judicial Review

Under section 307(b)(1) of the Act, petitions for judicial review of this action must be filed in the United States Court of Appeals for the appropriate circuit by July 1, 1997. Filing a petition for reconsideration by the Administrator of this final rule does not affect the finality of this rule for the purposes of judicial review nor does it extend the time within which a petition for judicial review may be filed, and shall not postpone the effectiveness of such rule or action. This action may not be challenged later in proceedings to enforce its requirements. (See section 307(b)(2).)

### List of Subjects in 40 CFR Part 52

Environmental protection, Air pollution control, Hydrocarbons, Incorporation by reference, Ozone, Reporting and recordkeeping requirements, Volatile organic compounds.

Dated: April 7, 1997.

**William J. Muszynski,**

*Acting Regional Administrator.*

Part 52, chapter I, title 40 of the Code of Federal Regulations is amended as follows:

## PART 52—[AMENDED]

1. The authority citation for part 52 continues to read as follows:

**Authority**: 42 U.S.C. 7401–7671q.

## Subpart FF—New Jersey

2. Section 52.1570 is amended by adding new paragraph (c)(62) to read as follows:

**§ 52.1570 Identification of plan.**

* * * * *

(c) * * *

(62) Revisions to the New Jersey State Implementation Plan (SIP) for ozone concerning the control of volatile organic compounds from consumer and commercial products, dated January 25, 1996 submitted by the New Jersey Department of Environmental Protection (NJDEP).

(i) Incorporation by reference.

(A) Title 7, Chapter 27, Subchapter 24, of the New Jersey Administrative Code entitled ''Control and Prohibition of Volatile Organic Compounds from Consumer and Commercial Products' effective November 6, 1995.

(ii) Additional material.

(A) January 25, 1996 letter from Robert C. Shinn, Jr., NJDEP, to Jeanne M. Fox, EPA, requesting EPA approval of Subchapter 24.

3. In 52.1605 the table is amended by adding a new entry for Subchapter 24 under the heading ''Title 7, Chapter 27'' to the table in numerical order to read as follows:

**§ 52.1605 EPA—approved New Jersey regulations.**

| State regulation | State effective date | EPA approved date | Comments |
|---|---|---|---|
| * * * | * * | * | * |
| Title 7, Chapter 27 | | | |
| * * * | * * | * | * |
| Subchapter 24, ''Control and Prohibition of Volatile Organic Compounds from Consumer and Commercial Products''. | Nov. 6, 1995 ..... | May 2, 1997 66 FR. | |
| * * * | * * | * | * |

[FR Doc. 97–11488 Filed 5–1–97; 8:45 am]

BILLING CODE 6560–50–P

## ENVIRONMENTAL PROTECTION AGENCY

## 40 CFR Parts 52 and 81

**[LA–38–1–7322; FRL–5814–3]**

## Approval and Promulgation of Implementation Plans and Designation of Areas for Air Quality Planning Purposes; State of Louisiana; Approval of the Maintenance Plan for Calcasieu Parish; Redesignation of Calcasieu Parish to Attainment for Ozone

**AGENCY:** Environmental Protection Agency (EPA).

**ACTION:** Final rule.

**SUMMARY:** On February 6, 1997, EPA published a notice of proposed rulemaking discussing its decision to approve a revision to the Louisiana State Implementation Plan (SIP) to redesignate Calcasieu Parish to attainment for ozone. *See* **Federal Register** (62 FR 5555). No adverse comments were received during the 30-day comment period. This rule finalizes EPA's decision to approve the redesignation of Calcasieu Parish, Louisiana to attainment for ozone.

**EFFECTIVE DATE:** This action is effective on June 2, 1997.

**ADDRESSES:** Copies of the State's request and other information relevant to this action are available for inspection during normal hours at the following locations:

Environmental Protection Agency, Region 6, Air Planning Section (6PD–L), 1445 Ross Avenue, Suite 700, Dallas, Texas 75202–2733.

Air and Radiation Docket and Information Center, Environmental Protection Agency, 401 M Street, S.W., Washington, D.C. 20460.

Louisiana Department of Environmental Quality, Office of Air Quality, 7290 Bluebonnet Boulevard, Baton Rouge, Louisiana 70810.

Anyone wishing to review this document at the EPA office is asked to contact the person below to schedule an appointment 24 hours in advance.

**FOR FURTHER INFORMATION CONTACT:** Lt. Mick Cote, Air Planning Section (6PD-L), Environmental Protection Agency, Region 6, 1445 Ross Avenue, Dallas, Texas 75202–2733, telephone (214) 665–7219.

**SUPPLEMENTARY INFORMATION:** The specific rationale EPA used to approve the redesignation of Calcasieu Parish to attainment for ozone was explained in the proposed rulemaking and will not be restated here. This rule announces EPA's final action regarding approval of the redesignation request.

### I. Final Rulemaking Action

In this final action EPA is promulgating a revision to the Louisiana SIP and the Code of Federal Regulations, parts 52 and 81, to

redesignate the Calcasieu Parish to attainment for ozone. This redesignation request was submitted by the Governor to EPA by letter dated December 20, 1995.

Nothing in this action should be construed as permitting or allowing or establishing a precedent for any future request for revision to any SIP. Each request for revision to the SIP shall be considered separately in light of specific technical, economic, and environmental factors and in relation to relevant statutory and regulatory requirements.

## II. Administrative Requirements

### *A. Executive Order (E.O.) 12866*

This action has been classified as a table 3 action for signature by the Regional Administrator under the procedures published in the **Federal Register** on January 19, 1989 (54 FR 2214–2225), as revised by a July 10, 1995, memorandum from Mary Nichols, Assistant Administrator for Air and Radiation. The Office of Management and Budget has exempted this regulatory action from E.O. 12866 review.

### *B. Regulatory Flexibility Act*

Under the Regulatory Flexibility Act, 5 U.S.C. 600 *et seq.*, EPA must prepare a regulatory flexibility analysis assessing the impact of any proposed or final rule on small entities. *See* 5 U.S.C. 603 and 604. Alternatively, EPA may certify that the rule will not have a significant impact on a substantial number of small entities. Small entities include small businesses, small not-for-profit enterprises, and government entities with jurisdiction over populations of less than 50,000.

The SIP approvals under section 110 and subchapter I, part D of the Clean Air Act (Act) do not create any new requirements but simply approve requirements that the State is already imposing. Therefore, because the Federal SIP approval does not impose any new requirements, I certify that it does not have a significant impact on any small entities affected. Moreover, due to the nature of the Federal-State relationship under the Act, preparation of a flexibility analysis would constitute Federal inquiry into the economic reasonableness of State action. The Act forbids EPA to base its actions concerning SIPs on such grounds. *See Union Electric Co.* v. *U.S. EPA,* 427 U.S. 246, 255–66 (1976); 42 U.S.C. 7410(a)(2).

### *C. Unfunded Mandates*

Under section 202 of the Unfunded Mandates Reform Act of 1995, signed into law on March 22, 1995, EPA must prepare a budgetary impact statement to accompany any proposed or final rule that includes a Federal mandate that may result in estimated costs to State, local, or tribal governments in the aggregate; or to private sector, of $100 million or more. Under section 205, EPA must select the most cost-effective and least burdensome alternative that achieves the objectives of the rule and is consistent with statutory requirements. Section 203 requires EPA to establish a plan for informing and advising any small governments that may be significantly or uniquely impacted by the rule.

The EPA has determined that the approval action promulgated does not include a Federal mandate that may result in estimated costs of $100 million or more to either State, local, or tribal governments in the aggregate, or to the private sector. This Federal action approves preexisting requirements under State or local law, and imposes no new Federal requirements. Accordingly, no additional costs to State, local, or tribal governments, or to the private sector, result from this action.

### *D. Submission to Congress and the General Accounting Office*

Under 5 U.S.C. 801(a)(1)(A) as added by the Small Business Regulatory Enforcement Fairness Act of 1996, EPA submitted a report containing this rule and other required information to the U.S. Senate, the U.S. House of Representatives and the Comptroller General of the General Accounting Office prior to publication of this rule in today's **Federal Register**. This rule is not a ''major rule'' as defined by 5 U.S.C. 804(2).

### *E. Petitions for Judicial Review*

Under section 307(b)(1) of the Act, petitions for judicial review of this action must be filed in the United States Court of Appeals for the appropriate circuit by July 1, 1997. Filing a petition for reconsideration by the Administrator of this final rule does not affect the finality of this rule for the purposes of judicial review nor does it extend the time within which a petition for judicial review may be filed, and shall not postpone the effectiveness of such rule or action. This action may not be challenged later in proceedings to enforce its requirements. *See* section 307(b)(2) of the Act.

### List of Subjects

*40 CFR Part 52*

Environmental protection, Air pollution control, Hydrocarbons, Incorporation by reference, Intergovernmental regulations, Ozone, Reporting and recordkeeping requirements, Volatile organic compounds.

*40 CFR Part 81*

Air pollution control, National parks, Wilderness areas.

Dated: April 10, 1997.

**Jerry Clifford,**

*Acting Regional Administrator.*

40 CFR Parts 52 and 81 are amended as follows:

## PART 52—[AMENDED]

1. The authority citation for part 52 continues to read as follows:

**Authority:** 42 U.S.C. 7401–7671q.

## Subpart T—Louisiana

2. Section 52.970 is amended by adding paragraph (c)(73) to read as follows:

### § 52.970 Identification of plan.

* * * * *

(c) * * *

(73) The Louisiana Department of Environmental Quality submitted a redesignation request and maintenance plan for Calcasieu Parish on December 20, 1995. The redesignation request and maintenance plan meet the redesignation requirements in section 107(d)(3)(E) of the Act. The redesignation meets the Federal requirements of section 182(a)(1) of the Act as a revision to the Louisiana ozone State Implementation Plan for Calcasieu Parish. The EPA therefore approved the request for redesignation to attainment with respect to ozone for Calcasieu Parish on June 2, 1997.

(i) Incorporation by reference. Letter dated December 20, 1995, from Governor Edwin E. Edwards of Louisiana to Ms. Jane Saginaw, Regional Administrator, transmitting a copy of the Calcasieu Parish maintenance plan and requesting the redesignation of Calcasieu Parish to attainment for ozone.

(ii) Additional material. The ten year ozone maintenance plan, including emissions projections and contingency measures, submitted to EPA as part of the Calcasieu Parish redesignation request on December 20, 1995.

3. Section 52.975 is amended by adding paragraph (e) to read as follows:

**§ 52.975 Redesignations and maintenance plans: ozone.**

* * * * *

(e) Approval—The Louisiana Department of Environmental Quality submitted a redesignation request and maintenance plan for Calcasieu Parish on December 20, 1995. The redesignation request and maintenance plan meet the redesignation requirements in section 107(d)(3)(E) of the Act. The redesignation meets the Federal requirements of section 182(a)(1) of the Act as a revision to the Louisiana ozone State Implementation Plan for Calcasieu Parish. The EPA therefore approved the request for redesignation to attainment with respect to ozone for Calcasieu Parish on June 2, 1997.

## PART 81—[AMENDED]

1. The authority citation for part 81 continues to read as follows:

**Authority:** 42 U.S.C. 7401–7671q.

2. In § 81.319, the ozone table is amended by revising the entry for Calcasieu Parish under ''Lake Charles Area'' to read as follows:

**§ 81.319 Louisiana.**

* * * * *

LOUISIANA—OZONE

| Designated area | Designation | | Classification | |
|---|---|---|---|---|
| | Date [1] | Type | Date | Type |
| * * * | * | * * | | * |
| Lake Charles Area Calcasieu Parish | June 2, 1997 | Attainment | | |
| * * * | * | * * | | * |

[1] This date is November 15, 1990, unless otherwise note.

* * * * *

[FR Doc. 97–11159 Filed 5–1–97; 8:45 am]

BILLING CODE 6560–50–P

## ENVIRONMENTAL PROTECTION AGENCY

## 40 CFR Part 81

**[ME3–1–5258a; A–1–FRL–5815–2]**

## Approval and Promulgation of Redesignation; Maine; Redesignation of Millinocket to Attainment for Sulfur Dioxide

**AGENCY:** Environmental Protection Agency (EPA).

**ACTION:** Direct final rule.

**SUMMARY:** EPA is approving a redesignation request submitted by the State of Maine. This request will redesignate Millinocket, ME from nonattainment to attainment for sulfur dioxide ($SO_2$). This action is being taken in accordance with the Clean Air Act.

**DATES:** This action will become effective July 1, 1997, unless notice is received by June 2, 1997 that adverse or critical comments will be submitted. If the effective date is delayed, timely notice will be published in the **Federal Register**.

**ADDRESSES:** Comments may be mailed to Susan Studlien, Deputy Director, Office of Ecosystems Protection, Region I, JFK Federal Building, Boston, MA 02203. Copies of the documents relevant to this action are available for public inspection during normal business hours, by appointment at the Office of Ecosystems Protection, U.S. Environmental Protection Agency, Region I, One Congress Street, 10th floor, Boston, MA; Air and Radiation Docket and Information Center, U.S. Environmental Protection Agency, 401 M Street, S.W., (LE–131), Washington, D.C. 20460; and the Bureau of Air Quality Control, Department of Environmental Protection, 71 Hospital Street, Augusta, ME 04333;

**FOR FURTHER INFORMATION CONTACT:** Ian D. Cohen, (617) 565–3568.

**SUPPLEMENTARY INFORMATION:** On April 30, 1984, the Maine Department of Environmental Protection (DEP) submitted a request to redesignate the area of Millinocket, ME from nonattainment to attainment for $SO_2$. The area was designated nonattainment in 1978 based on several monitored exceedences of the 24-hour National Ambient Air Quality Standard (NAAQS) for $SO_2$.

Section 107(d)(3)(D) of the Clean Air Act of 1990 (CAA) allows the Governor of a state to request the redesignation of an area designated nonattainment to attainment.

Section 107(d)(3)(E) of the CAA lists the requirements which must be met before EPA can redesignate an area to attainment.

### Background

In 1978, Millinocket was declared nonattainment for $SO_2$. The only significant source of $SO_2$ in the area is a paper mill, operated at the time by the Great Northern Paper Company. The mill is currently operated by Bowater, Inc. In 1980, a sulfur dioxide attainment plan for Millinocket was submitted and approved by EPA (45 FR 81941).

After this plan was approved, the area maintained compliance with the NAAQS for 12 consecutive quarters, and on December 29, 1983, the Governor of the State of Maine submitted a request to redesignate the area to attainment. EPA determined that the original request was incomplete since the monitored data alone was not sufficient to declare the area attainment. Maine DEP resubmitted the request accompanied by a modeling study on April 30, 1984. EPA then determined that the request was complete on June 19, 1984.

EPA was unable to process the redesignation request, however, because of a pending challenge to the use of ''merged'' stacks to comply with the ambient standards. *See NRDC* v. *Thomas*, 838 F.2d 1224 (D.C. Cir. 1988), cert. denied 109 S.Ct. 219 (1988). As part of the attainment plan, Great Northern had built a single merged stack for three exhaust streams. Litigants in *NRDC* v. *Thomas* had challenged whether it was proper to consider such a configuration in a modeling study. EPA has determined that these air streams were merged for sound economic and engineering reasons prior to 1985, and that sulfur emissions did not increase as a result of the merged stack. Therefore, EPA has determined that the merged stack is not a dispersion technique and may be included in the modelling. *See* 40 CFR 51.100(hh)(2)(ii)(C) and *NRDC* v. *Thomas*, 838 F.2d at 1255. The publicly available docket supporting this action

includes a technical support document which describes the basis for this determination in more detail.

Monitors in the Millinocket area have shown that since the original plan was implemented, the area has never violated the $SO_2$ standard during the last 16 years.

Section 107(d)(3)(E) requires the state to submit a maintenance plan as described in Section 175A. Maine has agreed to a maintenance plan which will protect the air quality in the Millinocket area. The plan includes contingency measures to be taken if future violations of the NAAQS occur. EPA requires the contingency measures for $SO_2$ maintenance plans to include a program to identify sources of violations of the $SO_2$ NAAQS and to undertake aggressive enforcement activity to address any SIP violations. 57 FR 13498, #13547 (April 16, 1992). The Bowater mill is the only large sulfur source in Millinocket likely to be responsible for sulfur NAAQS exceedences, and Maine has an ample enforcement program to assure that it complies with the SIP. The plan is part of the publicly available docket supporting this action.

EPA's review of this material indicates that Millinocket should be redesignated to attainment for $SO_2$.

## Summary of This Action

This action will redesignate Millinocket, ME from nonattainment for $SO_2$ to attainment for $SO_2$. By doing this, the entire Air Quality Control Region 109 will be in attainment for $SO_2$.

EPA is publishing this action without prior proposal because the Agency views this as a noncontroversial amendment and anticipates no adverse comments. However, in a separate document in this **Federal Register** publication, EPA is proposing to approve the SIP revision should adverse or critical comments be filed. This action will be effective July 1, 1997 unless adverse or critical comments are received by June 2, 1997.

If the EPA receives such comments, this action will be withdrawn before the effective date by simultaneously publishing a subsequent document that will withdraw the final action. All public comments received will then be addressed in a subsequent final rule based on this action serving as a proposed rule. The EPA will not institute a second comment period on this action. Any parties interested in commenting on this action should do so at this time. If no such comments are received, the public is advised that this action will be effective on July 1, 1997.

## Final Action

EPA is approving Maine's request to redesignate Millinocket to attainment for $SO_2$.

This action has been classified as a Table 3 action for signature by the Regional Administrator under the procedures published in the **Federal Register** on January 19, 1989 (54 FR 2214–2225), as revised by a July 10, 1995 memorandum from Mary Nichols, Assistant Administrator for Air and Radiation. The Office of Management and Budget (OMB) has exempted this regulatory action from review under Executive Order 12866.

## Administrative Requirements

### *A. Executive Order 12866*

This action has been classified as a Table 3 action for signature by the Regional Administrator under the procedures published in the **Federal Register** on January 19, 1989 (54 FR 2214–2225), as revised by a July 10, 1995 memorandum from Mary Nichols, Assistant Administrator for Air and Radiation. The Office of Management and Budget (OMB) has exempted this regulatory action from E.O. 12866 review.

### *B. Regulatory Flexibility Act*

Under the Regulatory Flexibility Act, 5 U.S.C. § 600 *et. seq.*, EPA must prepare a regulatory flexibility analysis assessing the impact of any proposed or final rule on small entities. 5 U.S.C. §§ 603 and 604. Alternatively, EPA may certify that the rule will not have a significant impact on a substantial number of small entities. Small entities include small businesses, small not-for-profit enterprises, and government entities with jurisdiction over populations of less than 50,000.

The SIP approvals under section 110 and subchapter I, part D of the Clean Air Act (Act) do not create any new requirements by simply approve requirements that the State is already imposing. Therefore, because the Federal SIP approval does not impose any new requirements, I certify that it does not have a significant impact on any small entities affected. Moreover, due to the nature of the Federal-State relationship under the Act, preparation of a flexibility analysis would constitute Federal inquiry into the economic reasonableness of State action. The Act forbids EPA to base its actions concerning SIPs on such grounds. See *Union Electric Co.* v. *U.S. EPA*, 427 U.S. 246, 255–66 (1976); 42 U.S.C. 7410(a)(2).

### *C. Unfunded Mandates*

Under Sections 202 of the Unfunded Mandates Reform Act of 1995 (''Unfunded Mandates Act''), signed into law on March 22, 1995, EPA must prepare a budgetary impact statement to accompany any proposed or final rule that includes a Federal mandate that may result in estimated costs to State, local, or tribal governments in the aggregate; or to the private sector, of $100 million or more. Under Section 205, EPA must select the most cost-effective and least burdensome alternative that achieves the objectives of the rule and is consistent with statutory requirements. Section 203 requires EPA to establish a plan for informing and advising any small governments that may be significantly or uniquely impacted by the rule.

EPA has determined that the approval action promulgated does not include a Federal mandate that may result in estimated costs of $100 million or more to either State, local, or tribal governments in the aggregate, or to the private sector. This Federal action approves pre-existing requirements under State or local law, and imposes no new requirements. Accordingly, no additional costs to State, local, or tribal governments, or to the private sector, result from this action.

### *D. Submission to Congress and the General Accounting Office*

Under 5 U.S.C. 801(a)(1)(A) as added by the Small Business Regulatory Enforcement Fairness Act of 1996, EPA submitted a report containing this rule and other required information to the U.S. Senate, the U.S. House of Representatives and the Comptroller General of the General Accounting Office prior to publication of the rule in today's **Federal Register**. This rule is not a ''major rule'' as defined by 5 U.S.C. 804(2).

### *E. Petitions for Judicial Review*

Under section 307(b)(1) of the Clean Air Act, petitions for judicial review of this action must be filed in the United States Court of Appeals for the appropriate circuit by July 1, 1997. Filing a petition for reconsideration by the Administrator of this final rule does not affect the finality of this rule for the purposes of judicial review nor does it extend the time within which a petition for judicial review may be filed, and shall not postpone the effectiveness of such rule or action. This action may not be challenged later in proceedings to enforce its requirements. (See section 307(b)(2).) EPA encourages interested parties to comment in response to the proposed rule rather than petition for judicial review, unless the objection arises after the comment period allowed for in the proposal.

**List of Subjects in 40 CFR Part 81**

Environmental protection, Air pollution control, Reporting and recordkeeping requirements, Sulfur oxides.

Dated: March 20, 1997.

**John P. DeVillars,**

*Regional Administrator, Region I.*

Part 81 of chapter I, title 40 of the Code of Federal Regulations is amended as follows:

## PART 81—[AMENDED]

1. The authority for part 81 continues to read as follows:

**Authority:** 42 U.S.C. 7401–7671q.

## Subpart C—Maine

2. Section 81.320 is amended by revising the table for $SO_2$ to read as follows:

**§ 81.320 Maine.**

* * * * *

$SO_2$

| Designated area | Does not meet primary standards | Does not meet secondary standards | Cannot be classified | Better than national standard |
|---|---|---|---|---|
| AQCR 110 | | | | X |
| AQCR 107 | | | | X |
| AQCR 109 | | | | X |
| AQCR 108-Madawaska | | | X | |
| Rest of region | | | | X |
| AQCR 111 | | | | X |

* * * * *

[FR Doc. 97–11483 Filed 5–1–97; 8:45 am]

BILLING CODE 6560–50–P

## ENVIRONMENTAL PROTECTION AGENCY

## 40 CFR Part 180

**[OPP–300481; FRL–5713–6]**

**RIN 2070–AB78**

## Clomazone; Pesticide Tolerances for Emergency Exemptions

**AGENCY:** Environmental Protection Agency (EPA).

**ACTION:** Final rule.

**SUMMARY:** This regulation establishes a time-limited tolerance for residues of the herbicide clomazone in or on the food commodity watermelons in connection with EPA's granting of emergency exemptions under section 18 of the Federal Insecticide, Fungicide, and Rodenticide Act authorizing use of clomazone on watermelons in Delaware, Virginia, and Maryland. This regulation establishes maximum permissible levels for residues of clomazone on watermelons pursuant to section 408(l)(6) of the Federal Food, Drug and Cosmetic Act, as amended by the Food Quality Protection Act of 1996. This tolerance will expire and is revoked on May 30, 1998.

**DATES:** This regulation becomes effective May 2, 1997. Objections and requests for hearings must be received by July 1, 1997.

**ADDRESSES:** Written objections and hearing requests, identified by the docket control number, [OPP–300481], must be submitted to: Hearing Clerk (1900), Environmental Protection Agency, Rm. M3708, 401 M St., SW., Washington, DC 20460. Fees accompanying objections and hearing requests shall be labeled ''Tolerance Petition Fees'' and forwarded to: EPA Headquarters Accounting Operations Branch, OPP (Tolerance Fees), P.O. Box 360277M, Pittsburgh, PA 15251. A copy of any objections and hearing requests filed with the Hearing Clerk identified by the docket control number, [OPP–300481], should be submitted to: Public Response and Program Resources Branch, Field Operations Division (7506C), Office of Pesticide Programs, Environmental Protection Agency, 401 M St., SW., Washington, DC 20460. In person, bring a copy of objections and hearing requests to Rm. 1132, CM #2, 1921 Jefferson Davis Hwy., Arlington, VA.

A copy of objections and hearing requests filed with the Hearing Clerk may also be submitted electronically by sending electronic mail (e-mail) to: opp-docket@epamail.epa.gov. Copies of objections and hearing requests must be submitted as an ASCII file avoiding the use of special characters and any form of encryption. Copies of objections and hearing requests will also be accepted on disks in WordPerfect 5.1 file format or ASCII file format. All copies of objections and hearing requests in electronic form must be identified by the docket number [OPP–300481]. No Confidential Business Information (CBI) should be submitted through e-mail. Electronic copies of objections and hearing requests on this rule may be filed online at many Federal Depository Libraries.

**FOR FURTHER INFORMATION CONTACT:** By mail: Virginia Dietrich, Registration Division (7505W), Environmental Protection Agency, 401 M St., SW., Washington, DC 20460. Office location, telephone number, and e-mail: Sixth Floor, Crystal Station #1, 2800 Jefferson Davis Highway, Arlington, VA (703) 308–8347, e-mail: dietrich.virginia@epamail.epa.gov.

**SUPPLEMENTARY INFORMATION:** EPA, pursuant to section 408(e) and (l)(6) of the Federal Food, Drug, and Cosmetic Act (FFDCA), 21 U.S.C. 346a(e) and (l)(6), is establishing tolerances for residues of the herbicide clomazone (2-(2-Chlorophenyl) methyl-4,4-dimethyl-3-isoxazolidinone) in or on watermelons at 0.1 ppm. This tolerance will expire and be revoked by EPA on May 30, 1998. After May 30, 1998, EPA will publish a document in the **Federal Register** to remove the revoked tolerance from the Code of Federal Regulations.

### I. Background and Statutory Authority

The Food Quality Protection Act of 1996 (FQPA) (Pub. L. 104–170) was signed into law August 3, 1996. FQPA amends both the Federal Food, Drug, and Cosmetic Act (FFDCA), 21 U.S.C. 301 et seq., and the Federal Insecticide, Fungicide, and Rodenticide Act (FIFRA), 7 U.S.C. 136 et seq. The FQPA amendments went into effect immediately. Among other things, FQPA amends FFDCA to bring all EPA pesticide tolerance-setting activities under a new section 408 with a new safety standard and new procedures. These activities are described below and discussed in greater detail in the final rule establishing the time-limited

tolerance associated with the emergency exemption for use of propiconazole on sorghum (61 CFR 58135, November 13, 1996) (FRL–5572–9).

New section 408(b)(2)(A)(i) allows EPA to establish a tolerance (the legal limit for a pesticide chemical residue in or on a food) only if EPA determines that the tolerance is ''safe.'' Section 408(b)(2)(A)(ii) defines ''safe'' to mean that ''there is a reasonable certainty that no harm will result from aggregate exposure to the pesticide chemical residue, including all anticipated dietary exposures and all other exposures for which there is reliable information.'' This includes exposure through drinking water, but does not include occupational exposure. Section 408(b)(2)(C) requires EPA to give special consideration to exposure of infants and children to the pesticide chemical residue in establishing a tolerance and to ''ensure that there is a reasonable certainty that no harm will result to infants and children from aggregate exposure to the pesticide chemical residue....''

Section 18 of FIFRA authorizes EPA to exempt any Federal or State agency from any provision of FIFRA, if EPA determines that ''emergency conditions exist which require such exemption''. This provision was not amended by FQPA. EPA has established regulations governing such emergency exemptions in 40 CFR part 166.

Section 408(l)(6) requires EPA to establish a time-limited tolerance or exemption from the requirement for a tolerance for pesticide chemical residues in food that will result from the use of a pesticide under an emergency exemption granted by EPA under section 18 of FIFRA. Section 408(l)(6) also requires EPA to promulgate regulations by August 3, 1997, governing the establishment of tolerances and exemptions under section 408(l)(6) and requires that the regulations be consistent with section 408(b)(2) and (c)(2) and FIFRA section 18.

Section 408(l)(6) allows EPA to establish tolerances or exemptions from the requirement for a tolerance, in connection with EPA's granting of FIFRA section 18 emergency exemptions, without providing notice or a period for public comment. Thus, consistent with the need to act expeditiously on requests for emergency exemptions under FIFRA, EPA can establish such tolerances or exemptions under the authority of section 408(e) and (l)(6) without notice and comment rulemaking.

In establishing section 18-related tolerances and exemptions during this interim period before EPA issues the section 408(l)(6) procedural regulation and before EPA makes its broad policy decisions concerning the interpretation and implementation of the new section 408, EPA does not intend to set precedents for the application of section 408 and the new safety standard to other tolerances and exemptions. Rather, these early section 18 tolerance and exemption decisions will be made on a case-by-case basis and will not bind EPA as it proceeds with further rulemaking and policy development. EPA intends to act on section 18-related tolerances and exemptions that clearly qualify under the new law.

## II. Emergency Exemptions for Clomazone on Watermelons and FFDCA Tolerances

Between December 30, 1996 and January 24, 1997, Departments of Agriculture from three states (Delaware, Maryland and Virginia) each requested a specific exemption under FIFRA section 18 for the use of clomazone to control weeds in watermelons. These exemptions stated that no herbicides with efficacy similar to clomazone are currently registered for use on watermelons and that without its use, significant economic loss will be expected. After having reviewed their submission, EPA concurs that an emergency condition exists.

As part of its assessment of these applications for emergency exemption, EPA assessed the potential risks presented by residues of clomazone on watermelons. In doing so, EPA considered the new safety standard in FFDCA section 408(b)(2), and EPA decided to grant the section 18 exemptions only after concluding that the necessary tolerance under FFDCA section 408(l)(6) would clearly be consistent with the new safety standard and with FIFRA section 18. This tolerance for clomazone will permit the marketing of watermelons treated in accordance with the provisions of the section 18 emergency exemptions. Consistent with the need to move quickly on the emergency exemptions and to ensure that the resulting food is safe and lawful, EPA is issuing this tolerance without notice and opportunity for public comment under section 408(e) as provided in section 408(l)(6). Although these tolerances will expire and are revoked on May 30, 1998, under FFDCA section 408(l)(5), residues of clomazone not in excess of the amount specified in the tolerance remaining in or on watermelons after that date will not be unlawful, provided the pesticide is applied during the term of, and in accordance with all the conditions of the emergency exemptions. EPA will take action to revoke this tolerance earlier if any experience with, scientific data on, or other relevant information on this pesticide indicate that the residues are not safe.

EPA has not made any decisions about whether clomazone meets the requirements for registration under FIFRA section 3 for use on watermelons or whether permanent tolerance for clomazone for watermelons would be appropriate. This action by EPA does not serve as a basis for registration of clomazone by a State for special local needs under FIFRA section 24(c). Nor does this action serve as the basis for any State other than Delaware, Virginia, and Maryland to use this product on watermelons under section 18 of FIFRA without following all provisions of section 18 as identified in 40 CFR 180.166. For additional information regarding the emergency exemptions for clomazone, contact the Agency's Registration Division at the address provided above.

## III. Risk Assessment and Statutory Findings

EPA performs a number of analyses to determine the risks from aggregate exposure to pesticide residues. First, EPA determines the toxicity of pesticides based primarily on toxicological studies using laboratory animals. These studies address many adverse health effects, including, but not limited to, reproductive effects, developmental toxicity, toxicity to the nervous system, and carcinogenicity. For many of these studies, a dose response relationship can be determined, which provides a dose that causes adverse effects (threshold effects) and doses causing no observed effects (the ''no-observed effect level'' or ''NOEL'').

Once a study has been evaluated and the observed effects have been determined to be threshold effects, EPA generally divides the NOEL from the study with the lowest NOEL by an uncertainty factor (usually 100 or more) to determine the Reference Dose (RfD). The RfD is a level at or below which daily aggregate exposure over a lifetime will not pose appreciable risks to human health. An uncertainty factor (sometimes called a ''safety factor'') of 100 is commonly used since it is assumed that people may be up to 10 times more sensitive to pesticides than the test animals, and that one person or subgroup of the population (such as infants and children) could be up to 10 times more sensitive to a pesticide than another. In addition, EPA assesses the

potential risks to infants and children based on the weight of the evidence of the toxicology studies and determines whether an additional uncertainty factor is warranted. Thus, an aggregate daily exposure to a pesticide residue at or below the RfD (expressed as 100 percent or less of the RfD) is generally considered by EPA to pose a reasonable certainty of no harm.

Lifetime feeding studies in two species of laboratory animals are conducted to screen pesticides for cancer effects. When evidence of increased cancer is noted in these studies, the Agency conducts a weight of the evidence review of all relevant toxicological data including short term and mutagenicity studies and structure activity relationship. Once a pesticide has been classified as a potential human carcinogen, different types of risk assessments (e.g., linear low dose extrapolations or margin of exposure calculation based on the appropriate NOEL) will be carried out based on the nature of the carcinogenic response and the Agency's knowledge of its mode of action.

In examining aggregate exposure, FFDCA section 408 requires that EPA take into account available and reliable information concerning exposure from the pesticide residue in the food in question, residues in other foods for which there are tolerances, and other non-occupational exposures, such as where residues leach into groundwater or surface water that is consumed as drinking water. Dietary exposure to residues of a pesticide in a food commodity are estimated by multiplying the average daily consumption of the food forms of that commodity by the tolerance level or the anticipated pesticide residue level. The Theoretical Maximum Residue Contribution (TMRC) is an estimate of the level of residues consumed daily if each food item contained pesticide residues equal to the tolerance. The TMRC is a ''worst case'' estimate since it is based on the assumptions that food contains pesticide residues at the tolerance level and that 100 percent of the crop is treated by pesticides that have established tolerances. If the TMRC exceeds the RfD or poses a lifetime cancer risk that is greater than approximately one in a million, EPA attempts to derive a more accurate exposure estimate for the pesticide by evaluating additional types of information (anticipated residue data and/or percent of watermelons treated data) which show, generally, that pesticide residues in most foods when they are eaten are well below established tolerances.

## IV. Aggregate Risk Assessment and Determination of Safety

Consistent with section 408(b)(2)(D), EPA has reviewed the available scientific data and other relevant information in support of this action. Clomazone is not registered by EPA for indoor or outdoor residential use. Existing food and feed use tolerances for clomazone are listed in 40 CFR 180.425. EPA has sufficient data to assess the hazards of clomazone and to make a determination on aggregate exposure, consistent with section 408(b)(2), for the time-limited tolerance for residues of clomazone in or on watermelons at 0.1 ppm. EPA's assessment of the dietary exposures and risks associated with establishing these tolerances follows.

### *A. Toxicological Profile*

1. *Acute risk.* No appropriate acute dietary endpoint was identified by the Office of Pesticide Programs (OPP).

2. *Chronic risk.* Based on available chronic toxicity data, the OPP has established the RfD for clomazone at 0.043 mg/kg/day. The RfD is based on a 2–year feeding study in rats with a no observed effect level (NOEL) of 4.3 mg/kg/day and an uncertainty factor of 100, based on increased liver weights and serum cholesterol at the Lowest observed effect level (LOEL) of 21.5 mg/kg/day.

3. *Cancer risk.* Clomazone has not been classified by the Office of Pesticide programs. However, there have been no cancer concerns reported at this time.

### *B. Aggregate Exposure*

Tolerances for residues of clomazone are currently expressed as 2-(2-Chlorophenyl)methyl-4,4-dimethyl-3-isoxa-zolidinone. Tolerances currently exist for residues on more than a dozen commodities (see 40 CFR 180.425).

The Agency identified chronic exposure as appropriate for aggregate risk assessment. The aggregate chronic risk is equal to the sum of the chronic risk from exposure from food + water + residential (indoor and outdoor) uses. Clomazone is not registered for any residential uses so no exposure from this route is expected. The Agency estimates that aggregate risk (food plus drinking water) would not exceed the RfD for clomazone.

No short- or intermediate-term non-dietary, non-occupational exposure scenario exists for clomazone, therefore, a short- or intermediate-term aggregate risk assessment is not required. No appropriate acute dietary risk endpoint was identified, thus no acute aggregate risk assessment is required. A cancer aggregate risk assessment is not required because there are no reported cancer concerns at this time.

For purposes of assessing the potential dietary exposure under this tolerance, EPA assumed tolerance level residues and 100 percent of crop treated to estimate the TMRC from all established food uses for clomazone (for more than a dozen commodities) and the proposed use on watermelons. There are no watermelon animal feed items so no residue levels in animal commodities potentially resulting from feeding of these commodities were considered.

In examining aggregate exposure, FQPA directs EPA to consider available information concerning exposures from the pesticide residue in food and all other non-occupational exposures. The primary non food sources of exposure the Agency looks at include drinking water (whether from groundwater or surface water), and exposure through pesticide use in gardens, lawns, or buildings (residential and other indoor uses).

There is potential for clomazone to leach to ground water because based on the available studies used in EPA's assessment of environmental risk, clomazone is moderately persistent and potentially mobile. For this reason, exposure to clomazone through drinking water was considered during the risk assessment.

Because the Agency lacks sufficient water-related exposure data to complete a comprehensive drinking water risk assessment for many pesticides, EPA has commenced and nearly completed a process to identify a reasonable yet conservative bounding figure for the potential contribution of water related exposure to the aggregate risk posed by a pesticide. In developing the bounding figure, EPA estimated residue levels in water for a number of specific pesticides using various data sources. The Agency then applied the estimated residue levels, in conjunction with appropriate toxicological endpoints (RfD's or acute dietary NOEL's) and assumptions about body weight and consumption, to calculate, for each pesticide, the increment of aggregate risk contributed by consumption of contaminated water. While EPA has not yet pinpointed the appropriate bounding figure for consumption of contaminated water, the ranges the Agency is continuing to examine are all well below the level that would cause clomazone to exceed the RfD if the tolerances being considered in this document were granted. The Agency has therefore concluded that the potential exposures associated with clomazone in water, even at the higher levels the Agency is considering as a conservative upper bound, would not

prevent the Agency from determining that there is a reasonable certainty of no harm if the tolerances are granted.

*C. Cumulative Exposure to Substances with Common Mechanism of Toxicity*

Section 408(b)(2)(D)(v) requires that, when considering whether to establish, modify, or revoke a tolerance, the Agency consider ''available information'' concerning the cumulative effects of a particular pesticide's residues and ''other substances that have a common mechanism of toxicity.'' The Agency believes that ''available information'' in this context might include not only toxicity, chemistry, and exposure data, but also scientific policies and methodologies for understanding common mechanisms of toxicity and conducting cumulative risk assessments. For most pesticides, although the Agency has some information in its files that may turn out to be helpful in eventually determining whether a pesticide shares a common mechanism of toxicity with any other substances, EPA does not at this time have the methodologies to resolve the complex scientific issues concerning common mechanism of toxicity in a meaningful way. EPA has begun a pilot process to study this issue further through the examination of particular classes of pesticides. The Agency hopes that the results of this pilot process will increase the Agency's scientific understanding of this question such that EPA will be able to develop and apply scientific principles for better determining which chemicals have a common mechanism of toxicity and evaluating the cumulative effects of such chemicals. The Agency anticipates, however, that even as its understanding of the science of common mechanisms increases, decisions on specific classes of chemicals will be heavily dependent on chemical specific data, much of which may not be presently available.

Although at present the Agency does not know how to apply the information in its files concerning common mechanism issues to most risk assessments, there are pesticides as to which the common mechanism issues can be resolved. These pesticides include pesticides that are toxicologically dissimilar to existing chemical substances (in which case the Agency can conclude that it is unlikely that a pesticide shares a common mechanism of activity with other substances) and pesticides that produce a common toxic metabolite (in which case common mechanism of activity will be assumed). EPA has not made a determination whether clomazone and any other pesticide have a common mode of toxicity and require cumulative risk assessment. For purposes of these section 18 exemptions, the Agency has considered only risks from clomazone.

*D. Safety Determination for U.S. Population*

Based on the completeness and reliability of the toxicity data and the conservative TMRC dietary exposure assumptions, EPA has concluded that dietary exposure from food to clomazone will utilize <1 percent of the RfD for the U.S. population. EPA generally has no concern for exposures below 100 percent of the RfD because the RfD represents the level at or below which daily aggregate dietary exposure over a lifetime will not pose appreciable risks to human health. Whatever reasonable bounding figure the Agency eventually decides upon for the contribution from water, that number is expected to be well below 99% of the RfD. EPA concludes that there is a reasonable certainty that no harm will result from aggregate exposure to clomazone residues.

*E. Safety Determation for Infants and Children*

FFDCA section 408 provides that EPA shall apply an additional tenfold margin of exposure (safety factor) for infants and children in the case of threshold effects to account for pre-and post-natal toxicity and the completeness of the database unless EPA determines that a different margin of exposure (safety) will be safe for infants and children. Margins of exposure (safety) are often referred to as uncertainty (safety) factors. EPA believes that reliable data support using the standard margin of exposure (usually 100x for combined inter- and intra-species variability) and not the additional tenfold margin of exposure when EPA has a complete data base under existing guidelines and when the severity of the effect in infants or children or the potency or unusual toxic properties of a compound do not raise concerns regarding the adequacy of the standard margin of exposure. Based on current toxicological data requirements, the database for clomazone relative to pre- (provided by rat and rabbit developmental studies) and post-natal (provided by the rat reproduction study) toxicity is complete.

In assessing the adequacy of the standard uncertainty factor for clomazone, EPA considered data from developmental toxicity studies in the rat and rabbit and a 2-generation reproduction study in the rat. The developmental toxicity studies are designed to evaluate adverse effects on the developing organism resulting from pesticide exposure during prenatal development to one or both parents. Reproduction studies provide information relating to effects from exposure to the pesticide on the reproductive capability of mating animals and data on systemic toxicity.

Developmental toxicity was not observed in developmental studies using rats and rabbits. In the rat developmental toxicity study, the maternal and developmental NOELs and LELs occurred at the same dose levels of 100 and 300 mg/kg/day, respectively, and the developmental findings did not indicate a need for an acute dietary risk assessment. The rabbit developmental study had no developmental findings up to 700 mg/kg/day (highest dose tested).

The Agency's review, completed in 1986, of the rat reproductive toxicity study indicates that there may be a special post-natal sensitivity for infants and children. The parental NOEL and LOEL were 50 and 100 mg/kg/day, respectively, based on decreased body weight, decreased food consumption, increased clinical signs and increased organ weights. The pup NOEL and LOEL were 5 and 50 mg/kg/day, respectively, based on decreased survival, decreased viability, and decreased body weight.

However, upon rereview of this study for this section 18 exemption, the Agency has discovered discrepancies between the conclusions presented in the review and the data provided in its summary tables. However, based on our review, the Office of Pesticide Programs believes that the standard uncertainty factor is adequate to protect infants and children and that an additional uncertainty factor is not necessary.

In any event, given the low percentage (< 1%) of the RfD occupied for infants and children, which was calculated using very conservative aggregate risk estimates, aggregate exposure estimates for infants and children would not exceed the Agency's level of concern even if an additional uncertainty factor were to be added.

Despite the potential for exposure through drinking water, EPA has concluded that the percentage of the RfD that will be utilized by dietary exposure (including drinking water exposure) to residues of clomazone does not exceed 100% for any of the population subgroups. Considering food only, the population subgroup with the largest percentage of the RfD occupied is the non-nursing infants (< 1 year old) at < 1% of the RfD. Therefore, taking into account the completeness and reliability of the toxicity data and the conservative exposure assessment, EPA

concludes that there is a reasonable certainty that no harm will result to infants and children from aggregate exposure to clomazone residues.

## V. Other Considerations

The metabolism of clomazone in plants is adequately understood for the purposes of this tolerance. There are no Codex, Canadian, or Mexican international maximum residue levels established for residues of clomazone on watermelons. There is a practical analytical method (Method I, Pesticide Analytical Manual, Volume II) for detecting and measuring levels of clomazone in or on food with a limit of detection that allows monitoring of food with residues at or above the level set by the clomazone tolerance. EPA has provided information on this method to FDA. The method is available to anyone who is interested in pesticide residue enforcement from: By mail, Calvin Furlow, Public Response and Program Resources Branch, Field Operations Division (7506C), Office of Pesticide Programs, Environmental Protection Agency, 401 M St., SW., Washington, DC 20460. Office location and telephone number: Crystal Mall #2, Rm 1128, 1921 Jefferson Davis Hwy., Arlington, VA 703–305–5805.

## VI. Conclusion

Therefore, tolerances in connection with the FIFRA section 18 emergency exemptions are established for residues of clomazone in or on watermelons at 0.1 p.m.

## VII. Objections and Hearing Requests

The new FFDCA section 408(g) provides essentially the same process for persons to ''object'' to a tolerance regulation issued by EPA under new section 408(e) and (l)(6) as was provided in the old section 408 and in section 409. However, the period for filing objections is 60 days, rather than 30 days. EPA currently has procedural regulations which govern the submission of objections and hearing requests. These regulations will require some modification to reflect the new law. However, until those modifications can be made, EPA will continue to use those procedural regulations with appropriate adjustments to reflect the new law.

Any person may, by July 1, 1997, file written objections to any aspect of this regulation and may also request a hearing on those objections. Objections and hearing requests must be filed with the Hearing Clerk, at the address given above (40 CFR 178.20). A copy of the objections and/or hearing requests filed with the Hearing Clerk should be submitted to the OPP docket for this rulemaking. The objections submitted must specify the provisions of the regulation deemed objectionable and the grounds for the objections (40 CFR 178.25). Each objection must be accompanied by the fee prescribed by 40 CFR 180.33(i). If a hearing is requested, the objections must include a statement of the factual issues on which a hearing is requested, the requestor's contentions on such issues, and a summary of any evidence relied upon by the requestor (40 CFR 178.27). A request for a hearing will be granted if the Administrator determines that the material submitted shows the following: There is genuine and substantial issue of fact; there is a reasonable possibility that available evidence identified by the requestor would, if established, resolve one or more of such issues in favor of the requestor, taking into account uncontested claims or facts to the contrary; and resolution of the factual issues in the manner sought by the requestor would be adequate to justify the action requested (40 CFR 178.32). Information submitted in connection with an objection or hearing request may be claimed confidential by marking any part or all of that information as Confidential Business Information (CBI). Information so marked will not be disclosed except in accordance with procedures set forth in 40 CFR part 2. A copy of the information that does not contain CBI must be submitted for inclusion in the public record. Information not marked confidential may be disclosed publicly by EPA without prior notice.

## VIII. Public Docket

EPA has established a record for this rulemaking under docket number [OPP–300481] (including any comments and data submitted electronically). A public version of this record, including printed, paper versions of electronic comments, which does not include any information claimed as CBI, is available for inspection from 8:30 a.m. to 4 p.m., Monday through Friday, excluding legal holidays. The public record is located in Room 1132 of the Public Response and Program Resources Branch, Field Operations Division (7506C), Office of Pesticide Programs, Environmental Protection Agency, Crystal Mall #2, 1921 Jefferson Davis Highway, Arlington, VA.

Electronic comments may be sent directly to EPA at:

opp-docket@epamail.epa.gov.

Electronic comments must be submitted as an ASCII file avoiding the use of special characters and any form of encryption.

The official record for this rulemaking, as well as the public version, as described above will be kept in paper form. Accordingly, EPA will transfer any copies of objections and hearing requests received electronically into printed, paper form as they are received and will place the paper copies in the official rulemaking record which will also include all comments submitted directly in writing. The official rulemaking record is the paper record maintained at the address in ''ADDRESSES'' at the beginning of this document.

## IX. Regulatory Assessment Requirements

Under Executive Order 12866 (58 FR 51735, October 4, 1993), this action is not a ''significant regulatory action'' and, since this action does not impose any information collection requirements as defined by the Paperwork Reduction Act, 44 U.S.C. 3501 et seq., it is not subject to review by the Office of Management and Budget. In addition, this action does not impose any enforceable duty or contain any unfunded mandate as described in the Unfunded Mandates Reform Act of 1995 (Pub. L. 104–4), or require prior consultation with State officials as specified by Executive Order 12875 (58 FR 58093, October 28, 1993), or special considerations as required by Executive Order 12898 (59 FR 7629, February 16, 1994).

Because FFDCA section 408(l)(6) permits establishment of this regulation without a notice of proposed rulemaking, the regulatory flexibility analysis requirements of the Regulatory Flexibility Act, 5 U.S.C. 604(a), do not apply. Nonetheless, the Agency has previously assessed whether establishing tolerances or exemptions from tolerance, raising tolerance levels, or expanding exemptions adversely impact small entities and concluded, as a generic matter, that there is no adverse impact. (46 FR 24950, May 4, 1981).

Under 5 U.S.C. 801(a)(1)(A) of the Administrative Procedure Act (APA) as amended by the Small Business Regulatory Enforcement Fairness Act of 1996 (Title II of Pub. L. 104–121, 110 Stat. 847), EPA submitted a report containing this rule and other required information to the U.S. Senate, the U.S. House of Representatives and the Comptroller General of the General Accounting Office prior to publication of the rule in today's **Federal Register**. This rule is not a ''major rule'' as defined by 5 U.S.C. 804(2) of the APA as amended.

**List of Subjects in 40 CFR Part 180**

Environmental protection, Administrative practice and procedure, Agricultural commodities, Pesticides and pests, Reporting and recordkeeping requirements.

Dated: April 18, 1997.

**Peter Caulkins,**

*Director, Office of Pesticide Programs.*

Therefore, 40 CFR Chapter I is amended as follows:

## PART 180—[AMENDED]

1. The authority citation for part 180 continues to read as follows:

**Authority:** 21 U.S.C. 346a and 371.

2. Section 180.425 is amended as follows

i. By designating the existing text as paragraph (a) ''*General*''.

ii. By adding paragraph (b).

iii. By adding and reserving paragraphs (c) and (d).

**§ 180.425 Clomazone; tolerances for residues.**

(a) *General.* * * *

(b) *Section 18 emergency exemptions.* Time limited tolerances are established for residues of the herbicide clomazone (2-(2-Chlorophenyl) methyl-4,4-dimethyl-3-isoxazolidinone) in connection with use of the pesticide under section 18 emergency exemptions granted by EPA. The tolerance is specified in the following table. The tolerance expires and will be revoked by EPA on the date specified in the table.

| Commodity | Parts per million | Expiration/ Revocation Date |
|---|---|---|
| Watermelons ..... | 0.1 | 5/30/98 |

(c) *Tolerances with regional registrations.* [Reserved]

(d) *Indirect or inadvertent residues.* [Reserved]

[FR Doc. 97–11505 Filed 5–01–97; 8:45 am]

BILLING CODE 6560–50–F

## ENVIRONMENTAL PROTECTION AGENCY

## 40 CFR Part 180

**[OPP–300474A; FRL–5714–5]**

**RIN 2070–AB78**

## Propiconazole; Pesticide Tolerances for Emergency Exemptions; Correction

**AGENCY:** Environmental Protection Agency (EPA).

**ACTION:** Final rule; correction.

**SUMMARY:** EPA published in the **Federal Register** of April 11, 1997, a document establishing time-limited tolerances for combined residues of the pesticide propiconazole in or on the food commodities almonds and cranberries. The tolerance level for cranberries was listed incorrectly. This document corrects the amount.

**EFFECTIVE DATE:** This correction is effective May 2, 1997.

**FOR FURTHER INFORMATION CONTACT:** By mail: Olga Odiott, Registration Division (7505W), Environmental Protection Agency, 401 M St., SW., Washington, DC 20460. Office location, telephone number, and e-mail: Sixth Floor, Crystal Station #1, 2800 Jefferson Davis Highway, Arlington, VA, 703–308–6418, e-mail: odiott.olga@epamail.epa.gov.

**SUPPLEMENTARY INFORMATION:** EPA published a document on April 11, 1997 (62 FR 17710) (FRL–5600–5), establishing time-limited tolerances for combined residues of the pesticide propiconazole in or on the food commodities almonds and cranberries. The tolerance level for cranberries was listed incorrectly. This document corrects the amount.

**List of Subjects in 40 CFR Part 180**

Environmental protection, Administrative practice and procedure, Agricultural commodities, Pesticides and pests, Reporting and recordkeeping requirements.

Dated: April 23, 1997.

**Stephen L. Johnson,**

*Acting Division Director, Office of Pesticide Programs.*

In FR Doc. 97–9371 published on April 11, 1997 (62 FR 17710), make the following correction:

**§ 180.434 [Corrected]**

On page 17717, in § 180.434(b), in the table, the entry for cranberries, in the second column, parts per million is corrected to read ''1.0''.

[FR Doc. 97–11506 Filed 5–1–97; 8:45 am]

BILLING CODE 6560–50–F

## ENVIRONMENTAL PROTECTION AGENCY

## 40 CFR Part 180

**[OPP–300479; FRL–5713–2]**

**RIN 2070–AB78**

## Paraquat; Pesticide Tolerances for Emergency Exemptions

**AGENCY:** Environmental Protection Agency (EPA).

**ACTION:** Final rule.

**SUMMARY:** This regulation establishes time-limited tolerances for residues of the herbicide paraquat in or on the food commodities sorghum grain, sorghum forage, sorghum stover, sorghum aspirated grain fractions, corn grain, corn forage, corn fodder, corn flour, and poultry byproducts in connection with EPA's granting of an emergency exemption under the Federal Insecticide, Fungicide, and Rodenticide Act authorizing use of paraquat on sorghum and corn in Louisiana. This regulation establishes maximum permissible levels for residues of paraquat in these foods pursuant to the Federal Food, Drug, and Cosmetic Act, as amended by the Food Quality Protection Act of 1996. The tolerances will expire and are revoked on April 14, 1998.

**DATES:** This regulation becomes effective May 2 1997. Objections and requests for hearings must be received by EPA on or before July 1, 1997.

**ADDRESSES:** Written objections and hearing requests, identified by the docket control number, [OPP–300479], must be submitted to: Hearing Clerk (1900), Environmental Protection Agency, Rm. M3708, 401 M St., SW., Washington, DC 20460. Fees accompanying objections and hearing requests shall be labeled ''Tolerance Petition Fees'' and forwarded to: EPA Headquarters Accounting Operations Branch, OPP (Tolerance Fees), P.O. Box 360277M, Pittsburgh, PA 15251. A copy of any objections and hearing requests filed with the Hearing Clerk identified by the docket control number, [OPP–300479], must also be submitted to: Public Response and Program Resources Branch, Field Operations Division (7506C), Office of Pesticide Programs, Environmental Protection Agency, 401 M St., SW., Washington, DC 20460. In person, bring a copy of objections and hearing requests to Rm. 1132, CM #2, 1921 Jefferson Davis Highway, Arlington, VA. A copy of objections and hearing requests filed with the Hearing Clerk may also be submitted electronically by sending electronic mail (e-mail) to: opp-docket@epamail.epa.gov.

Copies of objections and hearing requests must be submitted as an ASCII file avoiding the use of special characters and any form of encryption. Copies of objections and hearing requests will also be accepted on disks in WordPerfect 5.1 file format or ASCII file format. All copies of objections and hearing requests in electronic form must be identified by the docket number [OPP–300479]. No Confidential

Business Information (CBI) should be submitted through e-mail. Electronic copies of objections and hearing requests on this rule may be filed online at many Federal Depository Libraries.

**FOR FURTHER INFORMATION CONTACT:** By mail: Pat Cimino, Registration Division (7505W), Environmental Protection Agency, 401 M St., SW., Washington, DC 20460. Office location, telephone number, and e-mail address: Sixth Floor, Crystal Station #1, 2800 Jefferson Davis Highway, Arlington, VA, (703) 308-8328, e-mail: cimino.pat@epamail.epa.gov.

**SUPPLEMENTARY INFORMATION:** EPA, pursuant to section 408(e) and (l)(6) of the Federal Food, Drug, and Cosmetic Act (FFDCA), 21 U.S.C. 346a(e) and (l)(6), is establishing tolerances for residues of paraquat (1,1′-dimethyl-4,4′-bipyridinium-ion), in or on grain sorghum at 5.0 part per million (ppm), sorghum stover at 10.0 ppm, sorghum forage at 3.0 ppm, aspirated sorghum grain fractions at 50.0 ppm, corn grain at 0.05 ppm, corn forage at 3.0 ppm, corn fodder at 10.0 ppm, corn flour at 0.10 ppm and poultry byproducts at 0.02 ppm. These tolerances will expire and be revoked by EPA on April 14, 1998. After April 14, 1998, EPA will publish a document in the **Federal Register** to remove the revoked tolerances from the Code of Federal Regulations.

## I. Background and Statutory Authority

The Food Quality Protection Act of 1996 (FQPA) (Pub. L. 104–170) was signed into law August 3, 1996. FQPA amends both the FFDCA, 21 U.S.C. 301 et seq., and the Federal Insecticide, Fungicide, and Rodenticide Act (FIFRA), 7 U.S.C. 136 et seq. The FQPA amendments went into effect immediately. Among other things, FQPA amends FFDCA to bring all EPA pesticide tolerance-setting activities under a new section 408 with a new safety standard and new procedures. These activities are described below and discussed in greater detail in the final rule establishing the time-limited tolerance associated with the emergency exemption for use of propiconazole on sorghum (61 FR 58135, November 13, 1996)(FRL–5572–9).

New section 408(b)(2)(A)(i) allows EPA to establish a tolerance (the legal limit for a pesticide chemical residue in or on a food) only if EPA determines that the tolerance is ''safe.'' Section 408(b)(2)(A)(ii) defines ''safe'' to mean that ''there is a reasonable certainty that no harm will result from aggregate exposure to the pesticide chemical residue, including all anticipated dietary exposures and all other exposures for which there is reliable information.'' This includes exposure through drinking water, but does not include occupational exposure. Section 408(b)(2)(C) requires EPA to give special consideration to exposure of infants and children to the pesticide chemical residue in establishing a tolerance and to ''ensure that there is a reasonable certainty that no harm will result to infants and children from aggregate exposure to the pesticide chemical residue....''

Section 18 of FIFRA authorizes EPA to exempt any Federal or State agency from any provision of FIFRA, if EPA determines that ''emergency conditions exist which require such exemption.'' This provision was not amended by FQPA. EPA has established regulations governing such emergency exemptions in 40 CFR part 166.

Section 408(l)(6) requires EPA to establish a time-limited tolerance or exemption from the requirement for a tolerance for pesticide chemical residues in food that will result from the use of a pesticide under an emergency exemption granted by EPA under section 18 of FIFRA. Section 408(l)(6) also requires EPA to promulgate regulations by August 3, 1997, governing the establishment of tolerances and exemptions under section 408(l)(6) and requires that the regulations be consistent with section 408(b)(2) and (c)(2) and FIFRA section 18.

Section 408(l)(6) allows EPA to establish tolerances or exemptions from the requirement for a tolerance, in connection with EPA's granting of FIFRA section 18 emergency exemptions, without providing notice or a period for public comment. Thus, consistent with the need to act expeditiously on requests for emergency exemptions under FIFRA, EPA can establish such tolerances or exemptions under the authority of section 408(e) and (l)(6) without notice and comment rulemaking.

In establishing section 18-related tolerances and exemptions during this interim period before EPA issues the section 408(l)(6) procedural regulation and before EPA makes its broad policy decisions concerning the interpretation and implementation of the new section 408, EPA does not intend to set precedents for the application of section 408 and the new safety standard to other tolerances and exemptions. Rather, these early section 18 tolerance and exemption decisions will be made on a case-by-case basis and will not bind EPA as it proceeds with further rulemaking and policy development. EPA intends to act on section 18-related tolerances and exemptions that clearly qualify under the new law.

## II. Emergency Exemption for Paraquat on Sorghum and Corn and FFDCA Tolerances

On August 6, 1996, the Louisiana Department of Agriculture Forestry used its authority to declare the existence of a crisis situation within the state, thereby authorizing use under FIFRA section 18 of paraquat on sorghum and corn as a harvest aid for control of weeds. Louisiana stated that above average rainfall has resulted in regrowth and flushes of weeds in corn and sorghum rendering harvest difficult to impossible in the state. This could result in an economic disaster for Louisiana corn and sorghum producers.

As part of its assessment of these crisis declarations, EPA assessed the potential risks presented by residues of paraquat in or on sorghum and corn. In doing so, EPA considered the new safety standard in FFDCA section 408(b)(2), and EPA decided to allow the crisis uses only after concluding that the necessary tolerances under FFDCA section 408(l)(6) would clearly be consistent with the new safety standard and with FIFRA section 18. These tolerances for paraquat will permit the marketing of corn and sorghum treated in accordance with the provisions of the section 18 emergency exemptions. Consistent with the need to move quickly on the emergency exemptions and to ensure that the resulting food is safe and lawful, EPA is issuing these tolerances without notice and opportunity for public comment under section 408(e) as provided in section 408(l)(6). Although these tolerances will expire and are revoked on April 14, 1998, under FFDCA section 408(l)(5), residues of paraquat not in excess of the amounts specified in the tolerances remaining in or on sorghum and corn after that date will not be unlawful, provided the pesticide is applied during the term of, and in accordance with all the conditions of, the emergency exemptions. EPA will take action to revoke these tolerances earlier if any experience with, scientific data on, or other relevant information on this pesticide indicate that the residues are not safe.

EPA has not made any decisions about whether paraquat meets the requirements for registration under FIFRA section 3 for use on sorghum and corn, or whether permanent tolerances for paraquat for sorghum and corn would be appropriate. This action by EPA does not serve as a basis for registration of paraquat by a State for special local needs under FIFRA section

24(c). Nor does this action serve as the basis for any State other than Louisiana to use this product on this crop under section 18 of FIFRA without following all provisions of section 18 as identified in 40 CFR part 166. For additional information regarding the emergency exemptions for paraquat, contact the Agency's Registration Division at the address provided above.

## III. Risk Assessment and Statutory Findings

EPA performs a number of analyses to determine the risks from aggregate exposure to pesticide residues. First, EPA determines the toxicity of pesticides based primarily on toxicological studies using laboratory animals. These studies address many adverse health effects, including (but not limited to) reproductive effects, developmental toxicity, toxicity to the nervous system, and carcinogenicity. For many of these studies, a dose response relationship can be determined, which provides a dose that causes adverse effects (threshold effects) and doses causing no observed effects (the ''no-observed effect level'' or ''NOEL'').

Once a study has been evaluated and the observed effects have been determined to be threshold effects, EPA generally divides the NOEL from the study with the lowest NOEL by an uncertainty factor (usually 100 or more) to determine the Reference Dose (RfD). The RfD is a level at or below which daily aggregate exposure over a lifetime will not pose appreciable risks to human health. An uncertainty factor (sometimes called a ''safety factor'') of 100 is commonly used since it is assumed that people may be up to 10 times more sensitive to pesticides than the test animals, and that one person or subgroup of the population (such as infants and children) could be up to 10 times more sensitive to a pesticide than another. In addition, EPA assesses the potential risks to infants and children based on the weight of the evidence of the toxicology studies and determines whether an additional uncertainty factor is warranted. Thus, an aggregate daily exposure to a pesticide residue at or below the RfD (expressed as 100 percent or less of the RfD) is generally considered acceptable by EPA.

Lifetime feeding studies in two species of laboratory animals are conducted to screen pesticides for cancer effects. When evidence of increased cancer is noted in these studies, the Agency conducts a weight of the evidence review of all relevant toxicological data including short term and mutagenicity studies and structure activity relationship. Once a pesticide has been classified as a potential human carcinogen, different types of risk assessments (e.g., linear low dose extrapolations or margin of exposure calculation based on the appropriate NOEL) will be carried out based on the nature of the carcinogenic response and the Agency's knowledge of its mode of action.

In examining aggregate exposure, FFDCA section 408 requires that EPA take into account available and reliable information concerning exposure from the pesticide residue in the food in question, residues in other foods for which there are tolerances, and other non-occupational exposures, such as where residues leach into groundwater or surface water that is consumed as drinking water. Dietary exposure to residues of a pesticide in a food commodity are estimated by multiplying the average daily consumption of the food forms of that commodity by the tolerance level or the anticipated pesticide residue level. The Theoretical Maximum Residue Contribution (TMRC) is an estimate of the level of residues consumed daily if each food item contained pesticide residues equal to the tolerance. The TMRC is a ''worst case'' estimate since it is based on the assumptions that food contains pesticide residues at the tolerance level and that 100 percent of every crop considered in the analysis is treated with the pesticide being evaluated. If the TMRC exceeds the RfD or poses a lifetime cancer risk that is greater than approximately one in a million, EPA attempts to derive a more accurate exposure estimate for the pesticide by evaluating additional types of information (anticipated residue data and/or percent of crop treated data) which show, generally, that pesticide residues in most foods when they are eaten are well below established tolerances and that the entire crop may not have been treated with the pesticide.

## IV. Aggregate Risk Assessments, Cumulative Risk Discussion, and Determination of Safety

Consistent with section 408(b)(2)(D), EPA has reviewed the available scientific data and other relevant information in support of this action. Paraquat is already registered by EPA for use on various food and feed crops (see 40 CFR 180.205 for specific tolerances). Tolerances exist for most of the food or feed crops affected by these emergency exemptions [0.05 ppm (Non-Detectable) levels for corn (grain, fodder and forage) and sorghum (grain and forage)]; however, they were established for use patterns (primarily as pre-plant herbicide use for reduced-tillage soil conservation farming practices) with much longer pre harvest intervals (PHI) than these emergency exemption harvest-aid/desiccant use patterns.

The pesticide residues from the emergency exemption harvest aid/desiccant use pattern exceed the established tolerances, therefore, new tolerance levels are required. Tolerances exist for meat, milk, poultry and eggs to address the potential for secondary residues resulting from the use of treated commodities as feed. Secondary residues in animal commodities from this section 18 use, resulting from the use of sorghum or corn as feed, are not expected to exceed existing tolerances with the exception of poultry byproducts. The existing tolerance for poultry byproducts is 0.01 ppm. Residues in poultry byproducts are not expected to exceed 0.02 ppm as a result of these emergency exemption uses.

EPA has sufficient data to assess the hazards of paraquat and to make a determination on aggregate exposure, consistent with section 408(b)(2), for time-limited tolerances for residues of paraquat in or on grain sorghum at 5.0 part per million (ppm), sorghum stover at 10.0 ppm, sorghum forage at 3.0 ppm, aspirated sorghum grain fractions at 50.0 ppm, corn grain at 0.05 ppm, corn forage at 3.0 ppm, corn fodder at 10.0 ppm, corn flour at 0.10 ppm and poultry byproducts at 0.02 ppm. Concentration is not expected in other corn processed commodities (grits, oil, meal, and starch). The Agency's assessment of the dietary exposures and risks associated with establishing these tolerances follows.

### *A. Toxicological Profile*

1. *Chronic toxicity.* The RfD of 0.0045 milligrams per kilogram per day (mg/kg/day) was established by the Agency based on a 1–year dog feeding study with a NOEL of 15 ppm (0.45 mg/kg/day) and an uncertainty factor of 100. Chronic pneumonitis was observed at the next dose of paraquat tested, 30 ppm (0.93 mg/kg/day, expressed as paraquat cation).

2. *Acute toxicity.* Based on the proposed and existing use patterns and tolerances and available toxicological data, there are no acute dietary exposure endpoints of concern for paraquat.

3. *Carcinogenicity.* Using its Guidelines for Carcinogen Risk Assessment published September 24, 1986 (51 FR 33992), EPA has classified paraquat as Group ''E'' for carcinogenicity (evidence of noncarcinogenicity for humans).

*B. Aggregate Exposure*

Tolerances have been established (40 CFR 180.205) for the residues of paraquat in or on various food commodities ranging from 0.01 ppm in milk to 30.0 ppm in bean straw.

Other potential sources of exposure of the general population to residues of pesticides besides food are residues in drinking water and residues from non-occupational sources such as indoor and outdoor residential uses. There are no indoor or outdoor residential uses registered for paraquat.

There are no acute dietary exposure or cancer risk endpoints of concern for these uses of paraquat. Aggregate risk has been assessed from chronic exposure to food and drinking water.

1. *Dietary/food risk assessment considerations.* For the purpose of assessing potential chronic dietary exposure from paraquat, EPA assumed tolerance levels for all uses and percent of crop treated refinements for some commodities to estimate the Anticipated Residue Contribution (ARC) from the proposed and existing food uses of paraquat. The use of percent of crop treated data for some of the existing food uses in this analysis results in a more refined estimate of exposure than the TMRC. Percent of crop treated estimates are derived from Federal and private market survey data and are considered to be reliable data. Typically, a range of estimates are supplied and the upper end of this range is assumed for the exposure assessment. By using this upper end estimate of percent crop treated, the Agency is reasonably certain that exposure is not understated for any significant subpopulation group.

2. *Drinking water considerations.* Review of terrestrial field dissipation data by the Environmental Fate and Effects Division indicates that paraquat is persistent and very soluble in water but has a high affinity to bind to sediment. As noted in ''Pesticides in Groundwater Database'' (EPA 734–12–92–001, Sept 1992), 971 wells were sampled in 5 states from 1983 to 1990. Eleven of the 971 wells exhibited positive hits, up to 0.1 milligram per liter (mg/L) (ppm). However, the two wells that exhibited concentrations at 0.1 mg/L were in Missouri, with a detection limit which was also 0.1 mg/L. The next highest concentration of paraquat was 0.018 mg/L from a well in Virginia, where the detection limit of the analytical method was 0.00001 mg/L 9. Based on the poor analytical methodology used, the Agency believes that the Missouri data are unreliable. There is no established Maximum Concentration Level for residues of paraquat in drinking water. The following health advisory levels for paraquat in drinking water have been established: children (short-term exposure) 0.1 mg/L; children (longer-term exposure) 0.05 mg/L; adult (intermediate-term exposure) 0.2 mg/L; and adult (lifetime exposure) 0.03 mg/L.

Because the Agency lacks sufficient water-related exposure data to complete a comprehensive drinking water risk assessment for many pesticides, EPA has commenced and nearly completed a process to identify a reasonable yet conservative bounding figure for the potential contribution of water related exposure to the aggregate risk posed by a pesticide. In developing the bounding figure, EPA estimated residue levels in water for a number of specific pesticides using various data sources. The Agency then applied the estimated residue levels, in conjunction with appropriate toxicological endpoints (RfD's or acute dietary NOEL's) and assumptions about body weight and consumption, to calculate, for each pesticide, the increment of aggregate risk contributed by consumption of contaminated water. While EPA has not yet pinpointed the appropriate bounding figure for consumption of contaminated water, the ranges the Agency is continuing to examine are all below the level that would cause paraquat to exceed the RfD if the tolerance being considered in this document were granted. The Agency has therefore concluded that the potential exposures associated with paraquat in water, even at the higher levels the Agency is considering as a conservative upper bound for RfD exposure considerations, would not prevent the Agency from determining that there is a reasonable certainty of no harm if the tolerance is granted.

3. *Non-dietary, non-occupational considerations.* Paraquat is not registered for indoor or outdoor residential use.

*C. Cumulative Exposure to Substances with Common Mechanism of Toxicity*

Section 408(b)(2)(D)(v) requires that, when considering whether to establish, modify, or revoke a tolerance, the Agency consider ''available information'' concerning the cumulative effects of a particular pesticide's residues and ''other substances that have a common mechanism of toxicity.'' The Agency believes that ''available information'' in this context might include not only toxicity, chemistry, and exposure data, but also scientific policies and methodologies for understanding common mechanisms of toxicity and conducting cumulative risk assessments. For most pesticides, although the Agency has some information in its files that may turn out to be helpful in eventually determining whether a pesticide shares a common mechanism of toxicity with any other substances, EPA does not at this time have the methodologies to resolve the complex scientific issues concerning common mechanism of toxicity in a meaningful way. EPA has begun a pilot process to study this issue further through the examination of particular classes of pesticides. The Agency hopes that the results of this pilot process will increase the Agency's scientific understanding of this question such that EPA will be able to develop and apply scientific principles for better determining which chemicals have a common mechanism of toxicity and evaluating the cumulative effects of such chemicals. The Agency anticipates, however, that even as its understanding of the science of common mechanisms increases, decisions on specific classes of chemicals will be heavily dependent on chemical-specific data, much of which may not be presently available.

Although at present the Agency does not know how to apply the information in its files concerning common mechanism issues to most risk assessments, there are pesticides as to which the common mechanism issues can be resolved. These pesticides include pesticides that are toxicologically dissimilar to existing chemical substances (in which case the Agency can conclude that it is unlikely that a pesticide shares a common mechanism of activity with other substances) and pesticides that produce a common toxic metabolite (in which case common mechanism of activity will be assumed).

EPA does not have, at this time, available data to determine whether paraquat has a common mechanism of toxicity with other substances or how to include this pesticide in a cumulative risk assessment. Unlike other pesticides for which EPA has followed a cumulative risk approach based on a common mechanism of toxicity, paraquat does not appear to produce a toxic metabolite produced by other substances. For the purposes of this tolerance action, therefore, EPA has not assumed that paraquat has a common mechanism of toxicity with other substances.

*D. Determination of Safety for U.S. Population, Infants and Children*

1. *U.S. population.* As discussed above, there are no acute dietary exposure or cancer risk endpoints of

concern for these uses of paraquat and based on currently available methodologies, no common mechanism of toxicity with other substances has been assumed. The safety for the U.S. population from this use has been determined using the aggregate risk assessment from chronic exposure to food and drinking water.

Based on the completeness and reliability of the toxicity data and the ARC dietary exposure assumptions, the Agency has concluded that chronic dietary risk from food accounts for 10% of the RfD. Despite the potential for exposure to paraquat in drinking water, EPA does not expect the aggregate exposure to exceed 100% of the RfD, even at the higher levels the Agency is considering as a conservative upper bound for RfD exposure considerations. EPA concludes that there is a reasonable certainty that no harm will result from aggregate exposure to paraquat residues.

2. *Infants and children.* Safety for infants and children from this use has been determined from: Consideration of the special susceptibilities of infants and children to pesticide residues including neurological differences between infants and children and adults, and effects of *in utero* exposure to pesticides and; aggregate risk assessment from chronic exposure to food and drinking water. As discussed above, there are no acute dietary exposure for these uses of paraquat and based on currently available methodologies, no common mechanism of toxicity with other substances has been assumed. A detailed explanation of the risk assessment follows:

i. *Special susceptibility of infants and children considerations.* In assessing the potential for additional sensitivity of infants and children to residues of paraquat, EPA considered data from developmental toxicity studies in the rat and rabbit and a 2-year reproductive toxicity study in rats. The developmental toxicity studies are designed to evaluate adverse effects on the developing organism resulting from pesticide exposure during pre-natal development to one or both parents. Reproductive toxicity studies provide information relating to effects from exposure to the pesticide on the reproductive capability of mating animals and data on systemic toxicity.

The results of the rat and mouse developmental studies have been used to assess the potential for additional pre-natal sensitivity to infants and children. In the rat developmental study, the maternal (systemic) NOEL and the developmental (fetus) NOEL are both 1 mg/kg/day. The LOELs are 5 mg/kg/day for both maternal (mother) and developmental (fetus) effects. The maternal NOEL and LOEL were based on clinical signs of thin and hunched appearance and decreased body weight gains. Developmental toxicity was manifested as decreases in fetal body weight and delayed ossification in forelimb and hindlimb digits. The developmental results at 5 mg/kg/day do not indicate any severe effects in comparison to the maternal effects at the LOEL, which would necessitate an acute dietary risk assessment for females 13+.

From the mouse developmental study, the maternal (systemic) and developmental (fetus) NOELs were established at 1 mg/kg/day with the LOELs set at 5 mg/kg/day. Maternal toxicity was observed at 5 mg/kg/day and above as reduction in body weight gain. Developmental toxicity was observed at 5 mg/kg/day as partially ossified 4th sternebrae. The developmental effects at the LOEL of 5 mg/kg/day do not demonstrate any special pre-natal sensitivity.

In both developmental toxicity studies, maternal (mother) and developmental (fetus) NOEL/LOEL levels and effects at the LOEL suggest that there is no special pre-natal sensitivity for infants and children from exposure to paraquat residues in the diet.

The results of the 2-generation rat reproduction study have been used to assess the potential for additional post-natal sensitivity. In the rat reproduction study the parental (systemic) NOEL was 1.25 mg/kg/day and the LOEL was 3.75 mg/kg/day based on increased incidence of alveolar histiocytosis. No reproductive effects were observed; therefore, the pup NOEL was considered to be >7.5 mg/kg/day, the highest dose tested. This result indicates that there are no special pre- or post- natal sensitivities to paraquat residues for infants and children.

ii. *Safety factor considerations.* FFDCA section 408 provides that EPA shall apply an additional safety factor for infants and children in the case of threshold effects to account for pre- and post-natal toxicity and the completeness of the data base unless EPA concludes, based on reliable evidence, that a different safety factor is protective of infants and children. EPA believes that reliable data support using a different safety factor (usually 100x) and not the additional safety factor when EPA has a complete data base under existing guidelines and when the severity of the effect in infants or children or the potency or unusual toxic properties of a compound do not raise concerns regarding the adequacy of the traditional safety factors. Based on current toxicological data requirements, the data base for paraquat relative to pre- and post-natal toxicity is complete. As described above, NOEL/LOEL levels and effects at the LOEL, from the developmental and the reproductive studies, suggest that there is no special pre- or post-natal sensitivity for infants and children from exposure to paraquat residues in the diet. The Agency has concluded that reliable data support use of the standard uncertainty factor as protecting the safety of infants and children and that an additional tenfold margin of exposure is unnecessary.

iii. *Chronic risk.* Based on ARC exposure estimates for food, as described above, EPA has concluded that the percentage of the RfD that will be utilized by dietary (food only) exposure to residues of paraquat ranges from 15% for children 7 to 12 years old, up to 31% for non-nursing infants. Despite the potential for exposure to paraquat in drinking water, EPA does not expect the aggregate exposure to exceed 100% of the RfD, even at the higher levels the Agency is considering as a conservative upper bound for RfD exposure considerations. EPA concludes that there is a reasonable certainty that no harm will result to infants and children from aggregate exposure to paraquat residues.

## V. Other Considerations

The nature of the residue in plants and animals is adequately understood for these tolerances. Codex maximum residue levels (MRL) are established for residues of paraquat for corn grain at 0.1 ppm and for sorghum grain at 0.5 ppm. The proposed tolerances for corn grain at 0.05 ppm and sorghum grain at 5.0 ppm differ from the Codex MRLs based on field residue data generated in the United States for these uses (Pesticide Petitions 5F1625 and 5H5088 for corn grain and 5F1591 for sorghum grain). These data indicate that use of the pesticide according to good agricultural practices and under the terms of the FIFRA emergency exemption will not result in residues in corn grain greater than 0.05 ppm or in sorghum grain greater than 5.0 ppm. Differences in use patterns and pre-harvest intervals may account for the differences between the Codex MRLs and the tolerance values generated from the pesticide residue trials in the United States. For purposes of these section 18 uses, the time-limited tolerances will be established at 0.05 ppm for corn grain and 5.0 ppm for sorghum grain. Harmonization of the U.S. tolerances with the Codex MRLs will be addressed if permanent tolerances and registrations are requested. Adequate enforcement

methodology, method I of PAM, Vol. II (spectrophotometric), is available to enforce the tolerance expression. The method is available to anyone who is interested in pesticide residue enforcement from: By mail, Calvin Furlow, Public Response and Program Resources Branch, Field Operations Division (7506C), Office of Pesticide Programs, Environmental Protection Agency, 401 M St., SW., Washington, DC 20460. Office location and telephone number: Crystal Mall #2, Rm. 1128, 1921 Jefferson Davis Highway, Arlington, VA (703) 305-5805.

## VI. Conclusion

Therefore, tolerances in connection with the FIFRA section 18 emergency exemptions are established for residues of paraquat in or on grain sorghum at 5.0 part per million (ppm), sorghum stover at 10.0 ppm, sorghum forage at 3.0 ppm, aspirated sorghum grain fractions at 50.0 ppm, corn grain at 0.05 ppm, corn forage at 3.0 ppm, corn fodder at 10.0 ppm, corn flour at 0.10 ppm and poultry byproducts at 0.02 ppm. These tolerances will expire and be revoked by EPA on April 14, 1998.

## VII. Objections and Hearing Requests

The new FFDCA section 408(g) provides essentially the same process for persons to ''object'' to a tolerance regulation issued by EPA under new section 408(e) and (l)(6) as was provided in the old section 408 and in section 409. However, the period for filing objections is 60 days, rather than 30 days. EPA currently has procedural regulations which govern the submission of objections and hearing requests. These regulations will require some modification to reflect the new law. However, until those modifications can be made, EPA will continue to use those procedural regulations with appropriate adjustments to reflect the new law.

Any person may, by July 1, 1997, file written objections to any aspect of this regulation and may also request a hearing on those objections. Objections and hearing requests must be filed with the Hearing Clerk, at the address given above (40 CFR 178.20). A copy of the objections and/or hearing requests filed with the Hearing Clerk should be submitted to the OPP docket for this rulemaking. The objections submitted must specify the provisions of the regulation deemed objectionable and the grounds for the objections (40 CFR 178.25). Each objection must be accompanied by the fee prescribed by 40 CFR 180.33(i). If a hearing is requested, the objections must include a statement of the factual issues on which a hearing is requested, the requestor's contentions on such issues, and a summary of any evidence relied upon by the requestor (40 CFR 178.27). A request for a hearing will be granted if the Administrator determines that the material submitted shows the following: There is genuine and substantial issue of fact; there is a reasonable possibility that available evidence identified by the requestor would, if established, resolve one or more of such issues in favor of the requestor, taking into account uncontested claims or facts to the contrary; and resolution of the factual issues in the manner sought by the requestor would be adequate to justify the action requested (40 CFR 178.32). Information submitted in connection with an objection or hearing request may be claimed confidential by marking any part or all of that information as CBI. Information so marked will not be disclosed except in accordance with procedures set forth in 40 CFR part 2. A copy of the information that does not contain CBI must be submitted for inclusion in the public record. Information not marked confidential may be disclosed publicly by EPA without prior notice.

## VIII. Public Docket

EPA has established a record for this rulemaking under docket number [OPP–300479] (including any comments and data submitted electronically). A public version of this record, including printed, paper versions of electronic comments, which does not include any information claimed as CBI, is available for inspection from 8:30 a.m. to 4 p.m., Monday through Friday, excluding legal holidays. The public record is located in Room 1132 of the Public Response and Program Resources Branch, Field Operations Division (7506C), Office of Pesticide Programs, Environmental Protection Agency, Crystal Mall #2, 1921 Jefferson Davis Highway, Arlington, VA.

Electronic comments may be sent directly to EPA at:

opp-docket@epamail.epa.gov.

Electronic comments must be submitted as an ASCII file avoiding the use of special characters and any form of encryption.

The official record for this rulemaking, as well as the public version, as described above will be kept in paper form. Accordingly, EPA will transfer any copies of objections and hearing requests received electronically into printed, paper form as they are received and will place the paper copies in the official rulemaking record which will also include all comments submitted directly in writing. The official rulemaking record is the paper record maintained at the address in ''ADDRESSES'' at the beginning of this document.

## IX. Regulatory Assessment Requirements

Under Executive Order 12866 (58 FR 51735, October 4, 1993), this action is not a ''significant regulatory action'' and, since this action does not impose any information collection requirements as defined by the Paperwork Reduction Act, 44 U.S.C. 3501 et seq., it is not subject to review by the Office of Management and Budget. In addition, this action does not impose any enforceable duty or contain any unfunded mandate as described in the Unfunded Mandates Reform Act of 1995 (Pub. L. 104–4), or require prior consultation with State officials as specified by Executive Order 12875 (58 FR 58093, October 28, 1993), or special considerations as required by Executive Order 12898 (59 FR 7629, February 16, 1994).

Because FFDCA section 408(l)(6) permits establishment of this regulation without a notice of proposed rulemaking, the regulatory flexibility analysis requirements of the Regulatory Flexibility Act, 5 U.S.C. 604(a), do not apply.

Under 5 U.S.C. 801(a)(1)(A) of the Administrative Procedure Act (APA) as amended by the Small Business Regulatory Enforcement Fairness Act of 1996 (Title II of Pub. L. 104–121, 110 Stat. 847), EPA submitted a report containing this rule and other required information to the U.S. Senate, the U.S. House of Representatives and the Comptroller General of the General Accounting Office prior to publication of the rule in today's **Federal Register**. This rule is not a ''major rule'' as defined by 5 U.S.C. 804(2) of the APA as amended.

## List of Subjects in 40 CFR part 180

Environmental protection, Administrative practice and procedure, Agricultural commodities, Pesticides and pests, Reporting and recordkeeping requirements.

Dated: April 17, 1997.

**Stephen L. Johnson,**

*Director, Registration Division, Office of Pesticide Programs.*

Therefore, 40 CFR Chapter I is amended as follows:

## PART 180— [AMENDED]

1. The authority citation for part 180 continues to read as follows:

**Authority:** 21 U.S.C. 346a and 371.

2. Section 180.205 is amended as follows:

a. In paragraph (a) by adding a paragraph heading, and new entries in alphabetical order to the table.

b. By redesignating paragraph (b) as paragraph (c) and adding a new paragraph (b).

c. In newly designated paragraph (c) by adding a paragraph heading.

d. By adding and reserving paragraph (d).

e. By revising the phrase ''raw agricultural'' to read ''food'' throughout the section.

**§ 180.205 Paraquat; tolerances for residues**

(a) *General.* * * *

| Commodity | Parts per million |
|---|---|
| * * * * | * |
| Hops, dried | 0.2 |
| * * * * | * |
| Mint, hay, spent | 3.0 |
| Sunflower, seed hulls | 6.0 |
| * * * * | * |

(b) *Section 18 emergency exemptions.* Time-limited tolerances are established for residues of the desiccant, defoliant, and herbicide paraquat (1,1′-dimethyl-4,4′-bipyridinium-ion) derived from applications of either the bis (methyl sulfate) or the dichloride salt (both calculated as the cation) in connection with use of the pesticide under section 18 emergency exemptions granted by EPA in or on the following food commodities:

| Commodity | Parts per million | Expiration/ Revocation Date |
|---|---|---|
| Sorghum grain | 5.0 | 4/14/98 |
| Sorghum stover | 10.0 | 4/14/98 |
| Sorghum forage | 3.0 | 4/14/98 |
| Sorghum, aspirated grain fractions | 50.0 | 4/14/98 |
| Corn grain | 0.05 | 4/14/98 |
| Corn forage | 3.0 | 4/14/98 |
| Corn fodder | 10.0 | 4/14/98 |
| Corn flour | 0.10 | 4/14/98 |
| Poultry, mbyp | 0.02 | 4/14/98 |

(c) *Tolerances with regional registrations.* * * *

(d) *Indirect or inadvertent residues.* [Reserved]

[FR Doc. 97–11507 Filed 5–1–97; 8:45 am]

BILLING CODE 6560–50–F

## ENVIRONMENTAL PROTECTION AGENCY

## 40 CFR Part 244

**[FRL–5814–7]**

## Solid Waste Programs; Management Guidelines for Beverage Containers, and Resource Recovery Facilities Guidelines; Removal of Obsolete Guidelines

**AGENCY:** U.S. Environmental Protection Agency (EPA).

**ACTION:** Partial withdrawal of direct final rule.

**SUMMARY:** On December 31, 1996, the Environmental Protection Agency (EPA) published a direct final rule (61 FR 69032) removing from the Code of Federal Regulations (CFR) two guidelines pertaining to solid waste management which are obsolete. This action was published without prior proposal. Because EPA has received adverse comment with respect to the removal of 40 CFR Part 244, Solid Waste Management Guidelines for Beverage Containers, EPA withdraws the removal of this Part from the direct final rule. The withdrawal of this Part does not affect the removal of 40 CFR Part 245 which became effective March 3, 1997.

**EFFECTIVE DATE:** March 3, 1997.

**FOR FURTHER INFORMATION CONTACT:** Deborah Gallman (703) 308–8600, U.S. EPA, Office of Solid Waste and Emergency Response, 401 M Street, SW, (5306W), Washington, D.C. 20460, or the RCRA Superfund Hotline, phone (800) 424–9346 or (703) 412–9810 in the Washington, DC, metropolitan area.

**SUPPLEMENTARY INFORMATION:** On December 31, 1996, EPA published in the **Federal Register** a direct final rule to remove two guidelines pertaining to solid waste management which the Agency believes to be obsolete, 40 CFR Part 244, Solid Waste Management Guidelines for Beverage Containers, and Part 245, Resource Recovery Facilities Guidelines. The activities addressed in these 1976 guidelines have been included in numerous state and local statutes and regulations and other Federal rules, or have been superseded by such Presidential actions as Executive Order 12873. The direct final rule was published without prior proposal in the **Federal Register** but with a provision for a 30 day comment period. In addition, EPA published a proposed rule, also on December 31, 1996 (61 FR 69059). EPA announced in both rules that, should EPA receive adverse comment on the direct final rule, the Agency would withdraw the direct final rule and address the comments received in a subsequent final rule based on the related proposed rule. EPA received adverse comment within the prescribed comment period specifically addressing the removal of 40 CFR Part 244. EPA did not receive adverse comments addressing the removal of 40 CFR Part 245. With today's action, EPA is withdrawing the removal of 40 CFR Part 244 from the December 31, 1996 direct final rule (61 FR 69032). The withdrawal of Part 244 from the direct final rule does not affect the removal of Part 245 which became effective March 3, 1997, as indicated in the direct final rule. The comments received regarding the removal of 40 CFR Part 244 will be addressed in a subsequent final rule based on the related proposed rule (61 FR 69059).

### List of Subjects in 40 CFR Part 244

Environmental protection, Waste treatment and disposal, Recycling, Government property.

Dated: April 16, 1997.

**Timothy Fields, Jr.,**

*Acting Assistant Administrator, Office of Solid Waste and Emergency Response.*

For the reasons set forth in the preamble, the amendment removing 40 CFR Part 244 published at 61 FR 69032 (December 31, 1996) is withdrawn and part 244 is added as follows:

## PART 244—SOLID WASTE MANAGEMENT GUIDELINES FOR BEVERAGE CONTAINERS

### Subpart A—General Provisions

Sec.
244.100 Scope.
244.101 Definitions.

### Subpart B—Requirements

244.200 Requirements.
244.201 Use of returnable beverage containers.
244.202 Information.
244.203 Implementation decisions and reporting.

**Appendix to Part 244—Recommended Bibliography**

**Authority:** Secs. 1008 and 6004 of the Solid Waste Disposal Act, as amended by the Resource Conservation and Recovery Act of 1976, as amended (42 U.S.C. 6907, 6964).

### Subpart A—General Provisions

**§ 244.100 Scope.**

(a) The ''Requirement'' sections contained herein delineate minimum actions for Federal agencies for reducing beverage container waste.

(b) Section 211 of the Act and Executive Order 11752 make the ''Requirements'' section of the

guidelines mandatory upon Federal agencies. They are recommended for adoption by State and local governments and private agencies.

(c) *Intent and Objectives.* (1) These Guidelines for Beverage Containers are intended to achieve a reduction in beverage container solid waste and litter, resulting in savings in waste collection and disposal costs to the Federal Government. They are also intended to achieve the conservation and more efficient use of energy and material resources through the development of effective beverage distribution and container collection systems.

(2) The guidelines are intended to achieve these goals by making all beverage containers returnable and encouraging reuse of recycling of the returned containers. To accomplish the return of beverage containers, a deposit of at least five cents on each returnable beverage container is to be paid upon purchase by the consumer and refunded to the consumer when the empty container is returned to the dealer. This refund value provides a positive incentive for consumers to return the empty containers. Once containers are returned, nonrefillable containers can be recycled and refillable bottles can be reused.

(3) The minimum deposit of five cents has been chosen because it is deemed a large enough incentive to induce the return of most containers, and it is the most widely used deposit amount in present deposit systems. Because this action is intended to be compatible with present deposit systems, it is recommended that Federal facilities apply higher deposit levels in localities where higher levels are ordinarily used and lower deposit levels if the local area has an established return system with a minimum deposit level, for some or all beverage containers, of less than five cents.

(4) Final determination of how the requirements of the guidelines will be met rests with the head of each Federal agency.

(5) Federal facilities implementing the guidelines must charge refundable deposits on both refillable beverage containers and nonrefillable ones. Use of a refillable beverage container system will achieve the objectives of this guideline and will also most likely result in lower beverage prices for consumers. However, placing refundable deposits on nonrefillable containers, which are subsequently returned and recycled, also achieves the objectives of the guidelines.

(d) *Nonimplementation for Federal Facilities.* (1) The objectives of these guidelines are to reduce solid waste and litter and to conserve energy and materials through the use of a return system for beverage containers. In order to have a substantial impact on solid waste and litter created by beverage containers and to effect the concomitant energy and materials savings in a cost-effective manner, three conditions will be necessary: First, that consumers continue to purchase beverages from dealers at Federal facilities; second, that empty containers be returned and then reused or recycled; third, that the costs of implementation are not prohibitive. The head of each agency should consider these factors in order to make a determination regarding implementation of these guidelines.

(2) The Administrator recognizes that the requirements of these guidelines may not be practical at some Federal facilities due to geographic or logistic problems of a local nature. Further, he recognizes that the use of a returnable beverage container system will accomplish nothing if all reasonable efforts to implement such a system have failed to induce consumers to buy beverages in returnable containers or to return them when empty. When these situations persist, agencies may determine not to continue implementation of these guidelines.

(3) Federal agencies that make the determination not to use returnable containers shall provide to the Administrator the analysis and rationale used in making that determination as required by § 244.100(f)(3). The Administrator will publish notice of availability of this report in the **Federal Register**.

The following conditions are considered to be valid reasons for not using returnable beverage containers.

(i) Situations in which, after a trial implementation, there is no alternative available that results in meeting the objectives of the guidelines in a cost effective manner. Examples of indications of this situation include, but are not limited to:

(A) Data indicating a substantial and persistent reduction in beverage sales that is not directly attributable to any other cause; and

(B) Failure to establish a beverage container return rate that effectively achieves the objectives of these guidelines.

(ii) Situations in which no viable alternative can be found which avoids excessive, irrecoverable costs to the facility or the Agency. These conditions may prevail at either part or all of a facility. It is expected that facilities will use returnable beverage containers in those portions of their beverage distribution systems where it is effective to do so. However, it is recognized that in some situations, such as for unattended vending machines where it is impractical to establish refund locations, or in small remote outlets where the majority of consumers are transient, it may not be possible to use returnable containers effectively. The provisions for nonimplementation can be applied to those portions of a facility.

(e) The Environmental Protection Agency will render technical assistance and other guidance to Federal agencies when requested to do so pursuant to section 3(d)(1) of Executive Order 11752.

(f) *Reports*—(1) *Implementation Schedule Report.* This report is to advise the EPA of plans for the implementation of these guidelines. It is to be submitted to the Administrator within 60 days following an agency's determination to implement, and should include a list of planned implementation actions and a schedule indicating when those actions will be taken.

(2) [Reserved]

(3) *Nonimplementation Report.* Nonimplementation reports are to be submitted to the Administrator as soon as possible after a final agency determination has been made not to use returnable beverage containers but not later than sixty days after this determination. The Administrator will indicate to the reporting agency his concurrence or nonconcurrence with the agency's decision, including his reasons therefor. This concurrence or nonconcurrence is advisory. Nonimplementation reports should include:

(i) A description of alternative actions considered or implemented, including those actions which, if taken or continued, would have involved a deposit or return system.

(ii) A description of ongoing actions that will be continued and actions taken or proposed that would preclude future implementation of a returnable beverage container system. This statement should identify all agency facilities or categories of facilities that will be affected.

(iii) An analysis in support of the determination not to implement a deposit system, including technical data, market studies, and policy considerations used in making that determination. If the determination not to implement is based on inability to achieve a cost-effective system, this analysis should include such things as sales volume, impact on total overhead costs, administrative costs, other costs of implementation, percentage of

containers sold that are returned, solid waste and litter reduction, energy and materials saved, and retail prices (before and after implementation).

### § 244.101 Definitions.

(a) *Beverage* means carbonated natural or mineral waters; soda water and similar carbonated soft drinks; and beer or other carbonated malt drinks in liquid form and intended for human consumption.

(b) *Beverage container* means an airtight container containing a beverage under pressure of carbonation. Cups and other open receptacles are specifically excluded from this definition.

(c) *Consumer* means any person who purchases a beverage in a beverage container for final use or consumption.

(d) *Dealer* means any person who engages in the sale of beverages in beverage containers to a consumer.

(e) *Deposit* means the sum paid to the dealer by the consumer when beverages are purchased in returnable beverage containers, and which is refunded when the beverage container is returned.

(f) *Distributor* means any person who engages in the sale of beverages, in beverage containers, to a dealer, including any manufacturer who engages in such sale.

(g) *Federal Agency* means any department, agency, establishment, or instrumentality of the executive branch of the United States Government.

(h) *Federal facility* means any building, installation, structure, land, or public work owned by or leased to the Federal Government. Ships at sea, aircraft in the air, land forces on maneuvers, and other mobile facilities; and United States Government installations located on foreign soil or on land outside the jurisdiction of the United States Government are not considered ''Federal facilities'' for the purpose of these guidelines.

(i) *On-Premise Sales* means sales transactions in which beverages are purchased by a consumer for immediate consumption within the area under control of the dealer.

(j) *Recycling* means the process by which recovered materials are transformed into new products.

(k) *Refillable Beverage Container* means a beverage container that when returned to a distributor or bottler is refilled with a beverage and reused.

(l) *Refund* means the sum, equal to the deposit, that is given to the consumer or the dealer or both in exchange for empty returnable beverage containers.

(m) *Returnable Beverage Container* means a beverage container for which a deposit is paid upon purchase and for which a refund of equal value is payable upon return.

## Subpart B—Requirements

### § 244.200 Requirements.

### § 244.201 Use of returnable beverage containers.

(a) All beverages in beverage containers sold or offered for sale shall be sold in returnable beverage containers. On-premise sales are specifically excluded from this requirement provided that empty beverage containers are returned to the distributor for refilling, or are recycled, either by the dealer or by the distributor when markets for recyclable materials are available.

(b) The deposit shall be at least five (5) cents unless the local area has an established return system in operation with a lower minimum deposit level. In these specific areas, Federal facilities may adopt a minimum deposit equal to the local deposit level.

(c) A dealer shall accept from a consumer any empty beverage containers of the kind, size and brand sold by the dealer, and pay the consumer the refund value of the beverage container, provided the container is refillable or is labelled in accordance with § 244.202(a).

(d) The refund shall be provided at the place of sale whenever possible or as close to that place as practicable, and in any event, on the premises of the particular federal facility involved. Refund locations shall be conspicuously labelled as refund centers. If they are not in the immediate vicinity of the place of sale, notice of their location shall be prominently posted at that place of sale.

(e) A dealer shall not procure beverages in beverage containers from distributors who refuse to: Accept from the dealer any returnable beverage containers of the kind, size and brand sold by the distributor; pay to the dealer the refund value of the beverage containers; and reuse the returned containers or recycle them where markets for recyclable materials are available.

(f) Returned refillable beverage containers shall be returned to the distributor for refilling. Nonrefillable beverage containers shall be returned to the appropriate distributor or recycled, where markets for recyclable materials are available.

### § 244.202 Information.

(a) With the exception of refillable beverage containers, every returnable beverage container sold or offered for sale by a dealer shall clearly and conspicuously indicate, by embossing or by stamp, or by a label securely affixed to the beverage container, the refund value of the container and that the container is returnable.

(b) Dealers shall inform consumers that beverages are sold in returnable beverage containers by placing a sign, or a shelf label, or both, in close proximity to any sales display of beverages in returnable containers. That sign or label shall indicate that all containers are returnable, separately list the beverage price and deposit to be paid by the consumer, and shall indicate where the empty beverage containers may be returned for refund of the deposit.

### § 244.203 Implementation decisions and reporting.

Federal agencies are to determine whether or not to implement these guidelines by October 20, 1977. Reporting of that determination shall be in accordance with the following requirements:

(a) Federal agencies that plan to implement these guidelines shall report that decision to the Administrator in accordance with the procedures described in § 244.100(f)(1).

(b) Agencies that determine not to implement these guidelines shall provide to the Administrator a nonimplementation report in accordance with § 244.100(f)(3). This report shall include the reasons for nonimplementation, based on concepts presented in § 244.100(d).

### Appendix to Part 244—Recommended Bibliography

1. Office of Solid Waste Management Programs. Second report to Congress; resource recovery and source reduction. Environmental Protection Publication SW–122. Washington, U.S. Government Printing Office, 1974.

2. Applied Decision Systems, Inc. Study of the effectiveness and impact of the Oregon minimum deposit law. Salem, Oregon Legislative Fiscal Office, 1974.

3. Midwest Research Institute. Resource and environmental profile analysis of nine beverage container alternatives. Environmental Protection Publications SW–91c. Washington, U.S. Government Printing Office, 1974.

4. Alpha Beta Acme Markets, Inc. Bottle survey '71: A California supermarket report on the cost of handling returnable soft drink bottles. 1971.

5. Research Triangle Institute. The beverage container problem, analysis and recommendations. Environmental Protection Agency Publication R 2–72–059, 1972.

6. Research Triangle Institute. An evaluation of the effectiveness and costs of regulatory and fiscal policy instruments on product packaging. RTI Project No. 41U–824, 1974.

7. Lowe, R. A. Energy conservation through improved solid waste management.

Environmental Protection Agency Publication SW–125. Washington, U.S. Government Printing Office, 1974.

8. Gudger, C., and J. Bailes. The economic impact of Oregon's bottle bill. Oregon State University Press, 1974.

9. Claussen, E. Oregon's bottle bill: The first six months. Environmental Protection Agency Publication SW–109. Washington, U.S. Government Printing Office, 1973.

10. Scheinman, T. Mandatory deposit legislation for beer and soft drink containers in Maryland, an economic analysis. State of Maryland Council of Economic Advisers, 1974.

11. U.S. Congress, Senate. Hearings before the Subcommittee on the Environment, Committee on Commerce, 93rd Congress, May 6 to 7, 1974.

12. Quinn, Robert. No deposit no return * * * a report on beverage containers. New York State Senate Task Force on Critical Problems, 1975.

13. Weinberg, R. S. The effect of convenience packaging on the malt beverage industry 1947–1969. St. Louis, Missouri, December, 1971.

14. Impacts of beverage container regulations in Minnesota; a report to the Governor and the Minnesota Legislature. Minneapolis, Minnesota State Planning Agency, January, 1974.

15. Loube, M. Beverage containers; the Vermont experience. Washington, U.S. Environmental Protection Agency, 1975.

16. Nadworny, Milton J. Some economic consequences of the Vermont beverage container deposit law. Burlington, University of Vermont, February 1975.

17. O'Brien, M. Returnable containers for Maine; an environmental and economic assessment. Portland, Maine, Maine Citizens for Returnable Containers, March 17, 1975.

18. Questions and answers on returnable beverage containers for beer and soft drinks. U.S. Environmental Protection Agency, Office of Solid Waste Management programs, Resource Recovery Division. Washington, June 1975.

19. Ross, M. H. Employment effects of a ban on nonreturnable beverage containers in Michigan. Kalamazoo, Michigan, Kalamazoo Nature Center for Environmental Education, April, 1975.

20. Stern, C., et al. Impacts of beverage container legislation on Connecticut and a review of the experience in Oregon, Vermont and Washington State. Storrs, University of Connecticut, Department of Agricultural Economics, March 20, 1975.

21. Train, R. E. Win the war on waste. Presented at 3d National Congress on Waste Management Technology and Resource Recovery, San Francisco, November 14, 1975.

22. Waggoner, D. Oregon's bottle bill two years later. Portland, Oregon, Columbia Group Press, May, 1974.

23. Council on Environmental Economics. A report on the environmental economics regarding mandatory deposit legislation for beer and soft drink containers in Maryland. Annapolis, Maryland, January, 1975.

24. O'Brien, M. Returnable containers for Maine; an environmental and economic assessment. Maine Citizens for Returnable Containers. Portland, Maine, March 17, 1975, 13p.

[FR Doc. 97–11491 Filed 5–1–97; 8:45 am]

BILLING CODE 6560–50–P

## LEGAL SERVICES CORPORATION

## 45 CFR Part 1626

## Restrictions on Legal Assistance to Aliens

**AGENCY:** Legal Services Corporation.

**ACTION:** Correction to interim rule.

**SUMMARY:** This document contains a correction to an interim rule published on April 21, 1997 (62 FR 19409). The rule relates to restrictions on legal asssistance to aliens.

**DATES:** This correction is effective on April 21, 1997.

**FOR FURTHER INFORMATION CONTACT:** Victor M. Fortuno, General Counsel, (202) 336–8910.

**SUPPLEMENTARY INFORMATION:** As published on April 21, 1997 (62 FR 19409), the interim provisions listed in the Dates heading are incorrect. Accordingly, the publication is corrected as follows:

On page 19409, column 2, in the Dates heading referring to interim provisions, delete ''§ 1612.2 (f) and (g) and § 1612.4,'' and insert ''1626.2 (f) and (g) and § 1626.4'' in its place.

Dated: April 28, 1997.

**Victor M. Fortuno,**

*General Counsel.*

[FR Doc. 97–11363 Filed 5–1–97; 8:45 am]

BILLING CODE 7050–01–P

## FEDERAL COMMUNICATIONS COMMISSION

## 47 CFR Part 0

**[DA No. 97–721]**

## Alternate Designated Ethics Official

**AGENCY:** Federal Communications Commission.

**ACTION:** Final rule.

**SUMMARY:** The Commission has created a new position of Associate General Counsel for Ethics in the Office of General Counsel and has approved the designation of the current holder of that position as Alternate Designated Agency Ethics Official (DAEO). This Order clarifies that there will no longer be a specific position designated for the Alternate DAEO. This organizational change will be beneficial to the agency in implementing its statutory ethical obligations.

**EFFECTIVE DATE:** May 2, 1997.

**FOR FURTHER INFORMATION CONTACT:** Sharon B. Kelley, Office of General Counsel, (202) 418–1720.

**SUPPLEMENTARY INFORMATION:**

*Adopted:* April 9, 1997; *Released:* April 11, 1997.

1. Section 0.251(a) of the Commission's rules delegates authority to the General Counsel to act as the Designated Agency Ethics Official (DAEO) and the Associate General Counsel for Administrative Law to act as the Alternate DAEO. 47 CFR § 0.251(a). On March 13, 1997, the Commission created the position of Associate General Counsel for Ethics in the Office of General Counsel, effective March 16, 1997, and approved the designation of the current holder of that position as Alternate DAEO. The Commission also instructed the Managing Director to make conforming changes in the Commission's rules. To be consistent with this Commission action, section 0.251(a) will no longer identify a specific position for the Alternate DAEO.

2. Accordingly, it is ordered that, effective upon publication in the **Federal Register**, section 0.251(a) of the Commission's rules is amended, as set forth below pursuant to section 4(i) of the Communications Act of 1934, as amended. 47 U.S.C. § 154(i).

3. The amendment adopted in this Order involves agency organization and thus the Administrative Procedure Act's prior notice and comment effective date requirements do not apply. 5 U.S.C. §§ 553 (b)(A), (d).

### List of Subjects in 47 CFR Part 0

Organization and functions (Government agencies).

Federal Communications Commission.

**Andrew S. Fishel,**

*Managing Director.*

### Rule Change

Title 47 of the Code of Federal Regulations, Part 0, is amended as follows:

## PART 0—[AMENDED]

1. The authority for Part 0, Subpart B, of Title 47 of the Code of Federal Regulations continues to read as follows:

**Authority:** Sec. 5, 48 Stat. 1068, as amended; 47 U.S.C. 155.

2. Section 0.251 is amended by revising paragraph (a) to read as follows:

**§ 0.251 Authority delegated.**

(a) The General Counsel is delegated authority to act as the ''designated agency ethics official.''

* * * * *

[FR Doc. 97–11445 Filed 5–1–97; 8:45 am]

BILLING CODE 6712–01–P

## FEDERAL COMMUNICATIONS COMMISSION

## 47 CFR Part 73

**[MM Docket No. 95–135; RM–8681]**

## Radio Broadcasting Services; Honor, MI

**AGENCY:** Federal Communications Commission.

**ACTION:** Final rule; petition for reconsideration.

**SUMMARY:** The Commission denies the petition filed by Roger L. Hoppe, II (''Hoppe'') for reconsideration of the *Report and Order* in MM Docket No. 95–135, 61 FR 24243, May 14, 1996. The *Report and Order* allotted Channel 264A to Honor, Michigan, as a first local service and denied Hoppe's one step application and counterproposal as untimely to substitute Channel 264C2 for Channel 261A at Bear Lake, Michigan. The Commission has affirmed the action taken in the *Report and Order* that a first local service at Honor, Michigan, will better serve the public interest than expanded service at Bear Lake, Michigan.

**EFFECTIVE DATE:** May 2, 1997.

**FOR FURTHER INFORMATION CONTACT:** Kathleen Scheuerle, Mass Media Bureau, (202) 418–2180.

### List of Subjects in 47 CFR Part 73

Radio broadcasting.

Federal Communications Commission.

**Douglas W. Webbink,**

*Chief, Policy and Rules Division, Mass Media Bureau.*

[FR Doc. 97–11128 Filed 5–1–97; 8:45 am]

BILLING CODE 6712–01–P

## DEPARTMENT OF TRANSPORTATION

## Research and Special Programs Administration

## 49 CFR Parts 107 and 190

**[Docket No. RSP–3]**

**RIN 2137–AD00**

## Availability of Interpretations of Hazardous Materials and Pipeline Safety Regulations

**AGENCY:** Research and Special Programs Administration (RSPA), DOT.

**ACTION:** Final rule.

**SUMMARY:** In this final rule, RSPA establishes two new informational sections. The new sections give notice of the availability of informal guidance and interpretive assistance concerning the Federal hazardous materials transportation law and the Hazardous Materials Regulations, as well as the Federal pipeline safety law and the pipeline safety regulations.

**EFFECTIVE DATE:** The effective date of these amendments is May 2, 1997.

**FOR FURTHER INFORMATION CONTACT:** Nancy E. Machado, Office of the Chief Counsel, (202) 366–4400, RSPA, Department of Transportation, 400 Seventh Street SW., Washington, DC 20590–0001 (for hazardous materials transportation issues); or, Paul Sanchez, Office of the Chief Counsel, (202) 366–4400, RSPA, Department of Transportation, 400 Seventh Street SW., Washington, DC 20590–0001 (for pipeline safety issues).

**SUPPLEMENTARY INFORMATION:**

### Background

On March 29, 1996, the Small Business Regulatory Enforcement Fairness Act of 1996 (SBREFA), was enacted as Title II of the Contract with America Advancement Act of 1996, Pub. L. 104–121. Section 213(b) of SBREFA requires that, prior to March 29, 1997, each Federal agency that regulates small entities establish a program to answer inquiries by small entities concerning information on, advice about, and compliance with, statutes and agency regulations, taking into account specific facts supplied by the small entity. That section further provides that guidance given to a small entity may be used as evidence of the reasonableness or appropriateness of proposed fines, penalties, or damages in civil and administrative actions. Finally, the section mandates that each Federal agency report to Congress, by March 29, 1998, on the scope of its program; this report must include the number of small entities obtaining guidance, and the achievements of the agency's program.

### Hazardous Materials Safety—Part 107

The Federal hazardous material transportation law (Federal hazmat law), 49 U.S.C. 5101–5127, directs the Secretary of Transportation to prescribe regulations for the safe transportation of hazardous materials in commerce. 49 U.S.C. 5103. The Research and Special Programs Administration (RSPA) is the administration within the Department of Transportation primarily responsible for implementing the Federal hazmat law. 49 CFR 1.53. RSPA does so through the Hazardous Materials Regulations (HMR; 49 CFR Parts 171–180).

The Federal hazmat law and the HMR apply to a person who transports hazardous materials in commerce; causes hazardous material to be transported in commerce; or manufactures, fabricates, marks, maintains, reconditions, repairs, or tests a packaging or container which is represented, marked, certified, or sold by that person as qualified for use in transporting a hazardous material in commerce. Many of the persons involved in these regulated activities are small entities, including small business concerns and individuals.

RSPA's Office of Hazardous Materials Safety (OHMS) maintains a telephonic information line dedicated to answering questions concerning all aspects of regulated hazardous materials activities. Telephonic assistance is available from 9:00 a.m. to 4:00 p.m. Eastern time, Monday through Friday, except Federal holidays. At all other times, callers are requested to leave a recorded message, which is answered by the next business day.

The information line may be reached via a local, Washington, D.C. telephone number (202–366–4488), or through a toll-free ''800'' number (1–800–467–4922). Additionally, a written response to a question on the Hazardous Materials Regulations may be obtained by writing to RSPA's Office of Hazardous Materials Standards.

Information may also be obtained by contacting OHMS via the Internet (http://www.volpe.dot.gov/ohm). Information currently or soon to be available from OHMS' internet home page includes: (1) Recent rulemakings published by OHMS, in both text and image files; (2) Information about upcoming training classes provided by DOT; (3) The Emergency Response Guidebook, searchable by identification number and shipping name; (4) The Hazardous Materials Registration form, with guidance; and (5) The Hazardous

Materials Incident Report form, with guidance.

Presently, the information line's telephone numbers are published in RSPA's Hazardous Materials Information Exchange computer bulletin board, in informational brochures distributed to state and municipal governmental entities and trade organizations, in newsletters published by trade organizations, and in various DOT publications. Additionally, many of these sources also make known the availability of RSPA's written letters of clarification and assistance with hazardous materials issues. However, many small entities, including sole proprietorships, family businesses, and individuals, may not have access to these sources of information and, correspondingly, may be unaware of the verbal and written assistance available to them.

Also, RSPA's Office of the Chief Counsel (OCC) is available to answer questions concerning Federal hazmat law and Federal preemption of state, local and Indian tribe hazardous materials transportation requirements. OCC may be contacted by telephone (202–366–4400) from 9:00 a.m. to 4:00 p.m. Eastern time, Monday through Friday, except Federal holidays. Information and guidance concerning Federal hazmat law and preemption may also be obtained by writing to OCC or by contacting OCC via the Internet at http://rspa-atty.dot.gov. Specifically, OCC's website contains, or will soon contain: an organizational list; an index to preemption of state and local laws on hazardous materials transportation; the status of preemption determination applications; ''hot topic'' summaries of current significant decisions and events; procedural rules for pipeline safety administrative enforcement cases; and, a ''feedback'' mechanism to correspond electronically with OCC staff attorneys.

This rule amends the regulations in Part 107 by adding a new informational section 107.14. This section describes how to obtain telephonic assistance on hazardous materials issues, publishes the local and ''800'' telephone numbers for OHMS' information line and for OCC, and publishes OHMS' and OCC's Internet addresses. Section 107.14 also contains a paragraph which explains the availability of written guidance, and publishes the procedure for obtaining this guidance.

## Pipeline Safety—Part 190

Federal pipeline safety law, 49 U.S.C. 60101 *et seq.*, directs the Secretary of Transportation to prescribe minimum safety standards for pipeline transportation and for pipeline facilities. 49 U.S.C. 60102. RSPA is the administration within the Department of Transportation responsible for implementing the pipeline safety law. 49 CFR 1.53. RSPA does so through the pipeline safety regulations (49 CFR Parts 190–199).

The pipeline safety law and the pipeline safety regulations apply to owners and operators of pipeline facilities; may apply to the design, installation, inspection, emergency plans and procedures, testing, construction, extension, operation, replacement, and maintenance of pipeline facilities; and include a requirement that all individuals who operate and maintain pipeline facilities shall be qualified to operate and maintain the pipeline facilities. There are more than 20,000 gas and hazardous liquid pipeline companies, of which only about 1,000 are major companies.

RSPA's Office of Pipeline Safety (OPS) has designated its website on the Internet and a telephone line at the OPS Washington, D.C. headquarters as its means of disseminating information concerning small pipeline operators. It is also anticipated that the OPS regional offices and inspectors in the field will disseminate information and provide assistance to small operators. Small operators will be able to access information on pipeline safety regulations, recent **Federal Register** notices, interpretations, waivers, Alert Notices, and other useful information, including information on the availability of underground utility damage prevention programs in their region.

The OPS website will clearly display a ''Special Information for Operators of Small Pipelines and Master Meter Systems'' button. Small operators will have access to the recently revised ''Guidance Manual for Operators of Small Natural Gas Systems'' (the Small Gas Operators Manual), a document that explains how to comply with the pipeline safety regulations. In addition, small operators will be able to communicate directly with OPS engineers and regulatory personnel by clicking on a ''Talk With OPS'' button.

Both the OPS website and information telephone line are staffed by OPS engineers and regulatory personnel. OPS staff are available between the hours of 9:00 a.m. and 5:00 p.m. Eastern time, Monday through Friday, except Federal holidays. The OPS telephone number and OPS website address are provided in customer brochures. Callers may also be directed to the information telephone line through the main telephone line at OPS headquarters. Both services are accessible on a 24-hour basis. Individuals will be able to leave a recorded voicemail message by telephone or post a message at the website when OPS personnel are not present. All messages will receive a response by the following business day. The telephone number for the OPS information line is (202) 366–0918 and the OPS website can be accessed via the Internet at http://www.dot.ops.gov.

Also, OCC is available to answer questions concerning pipeline safety law, the statutory authority underlying RSPA's pipeline regulations. OCC may be contacted by telephone (202–366–4400) from 9:00 a.m. to 4:00 p.m. Eastern time, Monday through Friday, except Federal holidays. Information and guidance concerning pipeline safety law may also be obtained by writing to OCC or by contacting OCC via the Internet at http://rspa-atty.dot.gov. Specifically, OCC's website contains, or will soon contain: an organizational list; an index to preemption of state and local laws on hazardous materials transportation; the status of preemption determination applications; ''hot topic'' summaries of current significant decisions and events; procedural rules for pipeline safety administrative enforcement cases; and, a ''feedback'' mechanism to correspond electronically with OCC staff attorneys.

This rule will amend the pipeline safety regulations by adding a new informational regulation located at § 190.11. This section: (1) Sets out the availability of assistance via the OPS and OCC websites on the Internet and by telephone with respect to pipeline safety issues; (2) provides the OPS and OCC website Internet addresses; and (3) provides the OPS and OCC telephone numbers.

## Effective Date

Because the amendments adopted herein are for informational purposes only and impose no new regulatory burden on any person, notice and public procedure are unnecessary. For these same reasons, these amendments are being made effective without the usual 30-day delay following publication.

## Rulemaking Analysis and Notices

### *Executive Order 12866 and DOT Regulatory Policies and Procedures*

This final rule is not considered a significant regulatory action under section 3(f) of Executive Order 12866 and, therefore, was not reviewed by the Office of Management and Budget. The rule is not significant according to the Regulatory Policies and Procedures of the Department of Transportation (44 FR 11034). The changes adopted in this

rule do not result in any additional costs to the public or the agency. Because of the minimal economic impact of this rule, preparation of a regulatory evaluation is not warranted.

*Executive Order 12612*

This final rule has been analyzed in accordance with the principles and criteria in Executive Order 12612 (''Federalism'') and does not have sufficient Federalism impacts to warrant the preparation of a federalism assessment.

*Regulatory Flexibility Act*

I certify that this final rule will not have a significant economic impact on a substantial number of small entities. This rule does not impose any new requirements; thus, there are no direct or indirect adverse economic impact for small units of government, businesses or other organizations.

*Paperwork Reduction Act*

There are no new information collection requirements in this final rule.

*Regulation Identifier Number*

A regulation identifier number (RIN) is assigned to each regulatory action listed in the unified Agenda of Federal Regulations. The Regulatory Information Service Center publishes the Unified Agenda in April and October of each year. The RIN number contained in the heading of this document can be used to cross-reference this action with the Unified Agenda.

**List of Subjects**

*49 CFR Part 107*

Administrative practice and procedure, Hazardous materials transportation, Packaging and containers, Penalties.

*49 CFR Part 190*

Administrative practice and procedure, Pipeline safety.

In consideration of the foregoing, 49 CFR parts 107 and 190 are amended as follows:

## PART 107—HAZARDOUS MATERIALS PROGRAM PROCEDURES

1. The authority citation for part 107 is revised to read as follows:

**Authority:** 49 U.S.C. 5101–5127, 44701; Sec. 212–213, Pub. L. 104–121, 110 Stat. 857; 49 CFR 1.45, 1.53.

2. In subpart A, a new § 107.14 is added to read as follows:

**§ 107.14 Availability of informal guidance and interpretive assistance.**

(a) *Availability of telephonic and Internet assistance.* (1) RSPA has a toll-free, telephonic information line which provides answers to inquiries by small entities and other parties concerning information on and advice about compliance with the hazardous materials regulations, 49 CFR parts 171–180. The information line is staffed from 9:00 a.m. through 4:00 p.m., Eastern time, Monday through Friday, except Federal holidays. When the information line is not staffed, callers leave a recorded message, which will be answered by the next business day. The telephone numbers for the information line are: 1–800–467–4922 (that is; 1–800–HMR49–22 toll free), or 202–366–4488 (Washington, DC area). Additionally, information may be obtained from the Office of Hazardous Materials Safety via the Internet at http://www.volpe.dot.gov/ohm.

(2) RSPA's Office of the Chief Counsel (OCC) is available to answer questions concerning Federal hazardous material transportation law, 49 USC 5101 *et seq.* and Federal preemption of state, local and Indian tribe hazardous material transportation requirements. OCC may be contacted by telephone (202–366–4400) from 9:00 a.m. to 4:00 p.m. Eastern time, Monday through Friday, except Federal holidays. Information and guidance concerning Federal hazardous material transportation law and preemption may also be obtained by contacting OCC via the Internet at http://rspa-atty.dot.gov.

(b) *Availability of Written Interpretations.* (1) A written regulatory clarification, response to a question, or an opinion concerning hazardous materials offering, transporting, or packaging requirements may be obtained by submitting a written request to the RSPA Office of Hazardous Materials Standards (DHM–10), U.S. Department of Transportation, 400 Seventh Street, SW., Washington, DC 20590–0001. The requestor must include his or her return address and should also include a daytime telephone number.

(2) A written interpretation regarding Federal hazardous material transportation law, 49 USC 5101 *et seq.*, may be obtained from the Office of the Chief Counsel (DCC–1) RSPA, U.S. Department of Transportation, 400 Seventh Street, SW., Washington, DC 20590–0001. The requestor must include his or her return address and should also include a daytime telephone number.

## PART 190—PIPELINE SAFETY PROGRAMS AND RULEMAKING PROCEDURES

3. The authority citation for part 190 is revised to read as follows:

**Authority:** 33 U.S.C. 1321; 49 U.S.C. 5101–5127, 60101 *et seq.*; Sec. 212–213, Pub. L. 104–121, 110 Stat. 857; 49 CFR 1.53.

4. In subpart A, a new § 190.11 is added to read as follows:

**§ 190.11 Availability of informal guidance and interpretive assistance.**

(a) *Availability of telephonic and Internet assistance.* (1) RSPA has established a website on the Internet and a telephone line at the Office of Pipeline Safety headquarters where small operators and others can obtain information on and advice about compliance with pipeline safety regulations, 49 CFR parts 190–199. The website and telephone line are staffed by personnel from RSPA's Office of Pipeline Safety from 9:00 a.m. through 5:00 p.m., Eastern time, Monday through Friday, except Federal holidays. When the lines are not staffed, individuals may leave a recorded voicemail message, or post a message at the OPS website. All messages will receive a response by the following business day. The telephone number for the OPS information line is (202) 366–0918 and the OPS website can be accessed via the Internet at http://www.dot.ops.gov.

(2) RSPA's Office of the Chief Counsel (OCC) is available to answer questions concerning Federal pipeline safety law, 49 U.S.C. 60101 *et seq.* OCC may be contacted by telephone (202–366–4400) from 9:00 a.m. to 4:00 p.m. Eastern time, Monday through Friday, except Federal holidays. Information and guidance concerning Federal pipeline safety law may also be obtained by contacting OCC via the Internet at http://rspa-atty.dot.gov.

(b) *Availability of Written Interpretations.* (1) A written regulatory interpretation, response to a question, or an opinion concerning a pipeline safety issue may be obtained by submitting a written request to the Office of Pipeline Safety (DPS–10), RSPA, U.S. Department of Transportation, 400 Seventh Street, SW., Washington, DC 20590–0001. The requestor must include his or her return address and should also include a daytime telephone number.

(2) A written interpretation regarding Federal pipeline safety law, 49 U.S.C 60101 *et seq.*, may be obtained from the Office of the Chief Counsel, RSPA, U.S. Department of Transportation, 400 Seventh Street, SW., Washington, DC

20590–0001. The requestor must include his or her return address and should also include a daytime telephone number.

Issued in Washington, DC on April 18, 1997, under the authority delegated in 49 C.F.R. 1.53.

**Kelley S. Coyner,**

*Deputy Administrator.*

[FR Doc. 97–11436 Filed 5–1–97; 8:45 am]

BILLING CODE 4910–60–P

## DEPARTMENT OF COMMERCE

## National Oceanic and Atmospheric Administration

## 50 CFR Part 670

**[Docket No. 961107312–7021–02; I.D. 042897A]**

## Fisheries of the Exclusive Economic Zone Off Alaska; Pacific Cod by Catcher Vessels Using Trawl Gear in the Bering Sea and Aleutian Islands

**AGENCY:** National Marine Fisheries Service (NMFS), National Oceanic and Atmospheric Administration (NOAA), Commerce.

**ACTION:** Closure.

**SUMMARY:** NMFS is closing directed fishing for Pacific cod by catcher vessels using trawl gear in the Bering Sea and Aleutian Islands management area (BSAI). This action is necessary to prevent exceeding the portion of the 1997 total allowable catch (TAC) of Pacific cod allocated to catcher vessels using trawl gear in this area.

**EFFECTIVE DATE:** 1200 hrs, Alaska local time (A.l.t.), April 29, 1997, through 2400 hrs, A.l.t., December 31, 1997.

**FOR FURTHER INFORMATION CONTACT:** Andrew Smoker, 907–586-7228.

**SUPPLEMENTARY INFORMATION:** The groundfish fishery in the BSAI exclusive economic zone is managed by NMFS according to the Fishery Management Plan for the Groundfish Fishery of the Bering Sea and Aleutian Islands Area (FMP) prepared by the North Pacific Fishery Management Council under authority of the Magnuson-Stevens Fishery Conservation and Management Act. Fishing by U.S. vessels is governed by regulations implementing the FMP at subpart H of 50 CFR part 600 and 50 CFR part 679.

The portion of the TAC of Pacific cod allocated to catcher vessels using trawl gear in the BSAI was established by the Final 1997 Harvest Specifications of Groundfish for the BSAI (62 FR 7168, February 18, 1997) as 63,450 metric tons (mt). See § 679.20(c)(3)(iii) and § 679.20(a)(7)(i)(B).

In accordance with § 679.20(d)(1)(i), the Administrator, Alaska Region, NMFS (Regional Administrator), has determined that the portion of the TAC of Pacific cod allocated to catcher vessels using trawl gear in the BSAI will soon be reached. Therefore, the Regional Administrator is establishing a directed fishing allowance of 59,450 mt, and is setting aside the remaining 4,000 mt as bycatch to support other anticipated groundfish fisheries. In accordance with § 679.20(d)(1)(iii), the Regional Administrator finds that this directed fishing allowance will soon be reached. Consequently, NMFS is closing directed fishing for Pacific cod by catcher vessels using trawl gear in the BSAI.

Maximum retainable bycatch amounts for applicable gear types may be found in the regulations at § 679.20(e) and (f).

This action responds to the best available information recently obtained from the fishery. It must be implemented immediately in order to prevent overharvesting the 1997 TAC of Pacific cod allocated to catcher vessels using trawl gear in the BSAI. A delay in the effective date is impracticable and contrary to the public interest. The TAC will soon be reached. Further delay would only result in overharvest which would disrupt the FMP's objective of providing sufficient Pacific cod to support bycatch needs in other anticipated groundfish fisheries throughout the year. NMFS finds for good cause that the implementation of this action can not be delayed for 30 days. Accordingly, under 5 U.S.C. 553(d), a delay in the effective date is hereby waived.

### Classification

This action is required by § 679.20 and is exempt from review under E.O. 12866.

**Authority:** 16 U.S.C. 1801 *et seq.*

Dated: April 29, 1997.

**Gary Matlock,**

*Director, Office of Sustainable Fisheries, National Marine Fisheries Service.*

[FR Doc. 97–11472 Filed 4–29–97; 2:33 pm]

BILLING CODE 3510–22–F

## DEPARTMENT OF COMMERCE

## National Oceanic and Atmospheric Administration

## 50 CFR Part 679

**[Docket No. 961107312–7021–02; I.D. 042897B]**

## Fisheries of the Exclusive Economic Zone Off Alaska; Yellowfin Sole by Vessels Using Trawl Gear in the Bering Sea and Aleutian Islands

**AGENCY:** National Marine Fisheries Service (NMFS), National Oceanic and Atmospheric Administration (NOAA), Commerce.

**ACTION:** Closure.

**SUMMARY:** NMFS is closing directed fishing for yellowfin sole by vessels using trawl gear in the Bering Sea and Aleutian Islands management area (BSAI). This action is necessary to prevent exceeding the second seasonal apportionment of the 1997 Pacific halibut bycatch allowance specified for the trawl yellowfin sole fishery category.

**EFFECTIVE DATE:** 1200 hrs, Alaska local time (A.l.t.), April 29, 1997, until 1200 hrs, A.l.t., May 11, 1997.

**FOR FURTHER INFORMATION CONTACT:** Mary Furuness, 907–586-7228.

**SUPPLEMENTARY INFORMATION:** The groundfish fishery in the BSAI exclusive economic zone is managed by NMFS according to the Fishery Management Plan for the Groundfish Fishery of the Bering Sea and Aleutian Islands Area (FMP) prepared by the North Pacific Fishery Management Council under authority of the Magnuson-Stevens Fishery Conservation and Management Act. Fishing by U.S. vessels is governed by regulations implementing the FMP at subpart H of 50 CFR part 600 and 50 CFR part 679.

The second seasonal apportionment of the 1997 Pacific halibut bycatch allowance specified for the trawl yellowfin sole fishery in the BSAI, which is defined at § 679.21(e)(3)(iv)(B)(*1*), was established by the Final 1997 Harvest Specifications of Groundfish for the BSAI (62 FR 7168, February 18, 1997) as 210 metric tons.

In accordance with § 679.21(e)(7)(iv), the Administrator, Alaska Region, NMFS, has determined that the second seasonal apportionment of the 1997 Pacific halibut bycatch allowance specified for the trawl yellowfin sole fishery in the BSAI has been caught. Consequently, NMFS is prohibiting directed fishing for yellowfin sole by vessels using trawl gear in the BSAI for the remainder of the season.

Maximum retainable bycatch amounts for applicable gear types may be found in the regulations at § 679.20(e) and (f).

## Classification

This action is required by 50 CFR 679.21 and is exempt from review under E.O. 12866.

**Authority:** 16 U.S.C. 1801 *et seq.*

Dated: April 29, 1997.

**Gary Matlock,**

*Director, Office of Sustainable Fisheries, National Marine Fisheries Service.*

[FR Doc. 97–11471 Filed 4–29–97; 2:33 pm]

BILLING CODE 3510–22–F

# Proposed Rules

Federal Register
Vol. 62, No. 85
Friday, May 2, 1997

This section of the FEDERAL REGISTER contains notices to the public of the proposed issuance of rules and regulations. The purpose of these notices is to give interested persons an opportunity to participate in the rule making prior to the adoption of the final rules.

## ENVIRONMENTAL PROTECTION AGENCY

### 40 CFR Part 52

**[PA 042–4055; FRL–5820–4]**

### Approval and Promulgation of Air Quality Implementation Plans; Pennsylvania; New Source Review and Emissions Registry Regulation

**AGENCY:** Environmental Protection Agency (EPA).

**ACTION:** Proposed rule.

**SUMMARY:** EPA is proposing to grant limited approval of a State Implementation Plan (SIP) revision submitted by the Commonwealth of Pennsylvania pursuant to the requirements of the Clean Air Act (CAA). This revision requires major new and modified sources of volatile organic compounds (VOCs), nitrogen oxides ($NO_X$), particulate matter (PM), particulate matter with an aerodynamic diameter of less than 10 microns (PM–10), PM–10 precursors, sulfur oxides ($SO_X$), carbon monoxide (CO), or lead (Pb) to meet certain new source review permitting requirements if they are proposing to locate in a designated nonattainment area. These requirements also apply to major new and modified sources of VOCs and for $NO_X$ proposing to locate in the ozone transport region (OTR). This action is being taken under section 110 of the Clean Air Act (CAA).

**DATES:** Comments must be received on or before June 2, 1997.

**ADDRESSES:** Comments may be mailed to Kathleen Henry, Chief, Permit Programs Section, Mailcode 3AT23, U.S. Environmental Protection Agency, Region III, 841 Chestnut Building, Philadelphia, Pennsylvania 19107. Copies of the documents relevant to this action are available for public inspection during normal business hours at the Air, Radiation, and Toxics Division, U.S. Environmental Protection Agency, Region III, 841 Chestnut Building, Philadelphia, Pennsylvania 19107, and the Pennsylvania Department of Environmental Protection, Bureau of Air Quality, P.O. Box 8468, 400 Market Street, Harrisburg, Pennsylvania 17105.

**FOR FURTHER INFORMATION CONTACT:** Michael H. Markowski, 3AT23, U.S. Environmental Protection Agency, Region III, 841 Chestnut Building, Philadelphia, Pennsylvania, 19107, (215) 566–2063.

**SUPPLEMENTARY INFORMATION:**

## I. Background

*A. New Source Requirements and Pennsylvania's Submittal*

The CAA requires that all states submit to EPA, by November 15, 1992, a revision to their state implementation plans (SIPs) requiring major new and major modified sources to meet certain new source review (NSR) requirements if those sources are being located in areas designated nonattainment for a pollutant, are expected to emit pollutants in quantities likely to significantly impact such areas, or, in the case of VOC or $NO_X$ sources, if they are being located in the OTR. This requirement for a SIP revision applies to Pennsylvania, which currently has areas designated nonattainment for ozone (a pollutant formed under certain meteorological conditions from precursor VOC and $NO_X$ emissions), CO, $SO_2$ and PM–10.

Pennsylvania submitted a revision to its SIP, on February 4, 1994, requiring major new and modified sources of VOCs, $NO_X$, PM, PM–10, PM–10 precursors, $SO_X$, CO, or Pb to meet certain NSR requirements if they are being located in a designated nonattainment area, if they are expected to emit these pollutants in quantities sufficient to significantly impact a nonattainment area, or, in the case of VOC and $NO_X$ sources, if they are being located in the OTR. The NSR requirements include installing Lowest Achievable Emission Rate (LAER) technology and obtaining emission offsets. The submittal included associated emissions banking requirements and an emissions reduction credit (ERC) registry. Pennsylvania's submittal adds these new provisions in Subchapter E, Sections 127.201 through 127.217 of the Pennsylvania Code, and removes the older provisions, which were found in Subchapter C., Sections 127.61 through 127.73 (it reserves those regulation numbers).

*B. Federal Requirements*

According to section 172(c)(5) of the CAA, SIPs must require permits for the construction and operation of new or modified major stationary sources in nonattainment areas. The statutory permit requirements for ozone nonattainment areas are generally contained in revised section 173 of the CAA, and in subpart 2 of part D. Further, on July 23, 1996, EPA published in the **Federal Register** a comprehensive rulemaking which proposed significant changes to the current Prevention of Significant Deterioration (PSD) and nonattainment NSR rules. See 61 FR 38311 (1996). That rulemaking proposed to revise regulations for the approval and promulgation of SIPs and the requirements for preparation, adoption, and submittal of implementation plans governing the NSR programs mandated by Parts C and D of Title I of the CAA. Upon EPA promulgation of the final rulemaking at a later date, all states, including Pennsylvania, will be expected to evaluate their new source review regulations in accordance with the new requirements and to revise such regulations accordingly.

Important CAA requirements for new sources in nonattainment areas are found under sections 172, 173, 182, and 184 of the CAA. These requirements are summarized below.

a. According to section 173(a)(1) of the CAA, the state regulation must assure that calculations of emissions offsets are based on the same emissions baseline used in the demonstration of reasonable further progress (RFP).

b. According to section 173(c)(1) of the CAA, the state regulation may include provisions which allow offsets to be obtained in another nonattainment area if that area has an equal or higher nonattainment classification and emissions from the other nonattainment area contribute to a NAAQS violation in the area in which the source would construct.

c. According to section 173(c)(1) of the CAA, the state regulation must provide that any emissions offsets obtained in conjunction with the issuance of a permit to a new or modified source must be in effect and enforceable by the time the new or modified source commences operation.

This statutory condition for offsets augments the existing requirement under section 173 that provides that offsets must be federally-enforceable before permit issuance, although the required emissions reductions need not occur until the date on which the new or modified source commences operations.

d. According to section 173(c)(1) of the CAA, provisions of the state regulation must assure that emissions increases from new or modified sources will be offset by real reductions in actual emissions. EPA's initial guidance interpreting general sections of the CAA is contained in the Title I General Preamble published in the **Federal Register** on April 16, 1992 (57 FR 13498). In the General Preamble, EPA reiterated that emission increases and decreases for netting are to be determined consistent with EPA's current new source rules and the December 4, 1986 emissions trading policy statement (51 FR 43823). In addition, pre-enactment reductions are expected to be treated as new source growth, even though, for applicability purposes, the source's net emissions change is de minimis. EPA's current new source rules state that a decrease in emissions is only creditable if, among other requirements, the decrease has not been relied upon by the state for any permit, attainment demonstration, or reasonable further progress. Therefore, emission reductions made because of RACT or other requirements that have been taken into account in the state's demonstration of reasonable further progress or attainment demonstration are not creditable for netting purposes.

e. According to section 173(c)(2) of the CAA, the state rules must prevent emission reductions otherwise required by the CAA from being credited for purposes of part D offset requirements.

f. According to section 173(a)(5) of the CAA, the state regulation must require that prior to any part D permit being issued there be an analysis of alternative sites, sizes, production processes, and environmental control techniques for proposed sources that demonstrates that the benefits of the proposed source significantly outweigh the environmental and social costs imposed as a result of its location, construction, or modification.

g. According to section 328 of the CAA, the state regulation must assure that sources located on the Outer Continental Shelf (OCS) are subject to the same requirements applicable if the source were located in the corresponding onshore area.

h. Section 173(a)(3) of the CAA requires that the state regulation must assure that owners or operators of each proposed new or modified major stationary source demonstrate that all of their other major stationary sources in the state are in compliance.

i. The state regulation must define major new and major modified sources in accordance with the area's nonattainment classification under section 181 for ozone and section 186 for CO.

j. The state regulation must require emission offsets for major new and major modified sources in accordance with the area's nonattainment classification under section 181 for ozone and section 186 for CO.

k. The state regulation must require all applicable new source requirements to be met by sources locating in the OTR. For a severe or extreme ozone nonattainment area located in the transport region, the major stationary source size thresholds applicable to those areas apply for VOC and, presumptively, for $NO_X$. These provisions must also ensure that new or modified major stationary sources obtain VOC and, presumptively, $NO_X$ offsets at a ratio of at least 1.15 to 1 in order to obtain a NSR permit. Higher offset ratios apply in areas classified as serious or above under section 184 of the CAA.

l. The state regulation must ensure that any new or modified major stationary source of $NO_X$ satisfies the requirements applicable to any new or modified major stationary source of VOC, unless a special $NO_X$ exemption is granted by the Administrator under section 182(f) of the CAA.

m. State plans must, for serious and severe ozone nonattainment areas, implement sections 182(c) (6), (7) and (8) of the CAA with regard to modifications.

*C. Nonattainment Area Requirements Pertaining to Pennsylvania*

The CAA defines sources as major at various specified levels of emissions, depending on the attainment/nonattainment status of the area where the source is located, the severity of the nonattainment, and on whether or not the source is located in an OTR. Pennsylvania has areas designated nonattainment for ozone, for PM–10, for $SO_2$, and for CO.

With respect to ozone, section 182(d) of the CAA defines sources of VOCs located in severe ozone nonattainment areas as major when they have the potential to emit 25 tons per year (TPY) or more of VOCs. In Pennsylvania there is one severe ozone nonattainment area, the Philadelphia area (including Philadelphia, Bucks, Chester, Delaware, and Montgomery Counties) where the 25 TPY major source threshold for VOCs applies. Per section 182(f) of the CAA, $NO_X$ sources located in severe ozone nonattainment areas must also be considered major at the same threshold levels as VOC sources. Thus, in the Philadelphia area sources are considered major when they have the potential to emit 25 TPY or more of $NO_X$.

For the remainder of Pennsylvania, there are moderate areas to consider as well as the fact that the entire Commonwealth is part of the OTR. This is the key factor establishing the level of VOC or $NO_X$ emissions that trigger major NSR applicability. Per section 184 of the CAA, stationary VOC and $NO_X$ sources located in areas of Pennsylvania that are designated marginal, moderate or attainment for ozone which are also located in the OTR are subject to the same requirements as those applicable to such sources located in moderate ozone nonattainment areas. Therefore, sources located in the OTR are defined as major when they have the potential to emit 50 TPY or more of VOC, and sources located within the OTR are defined as major when they have the potential to emit 100 TPY or more of $NO_X$.

Pennsylvania also has nonattainment areas for PM–10 and CO in portions of Allegheny County, and for $SO_2$ in portions of Allegheny, Armstrong, and Warren Counties. In all of these areas, a new source is considered major when it has the potential to emit 100 TPY or more of the pollutant for which the area is designated nonattainment. Major modifications are defined by significant emissions increases in accordance with federal rules.

## II. EPA Analysis of Pennsylvania's Submittal

*A. Pennsylvania's Definitions of Major Source, Significant Emissions Increases, and Significant Air Quality Impacts*

The Commonwealth's proposed changes to Pennsylvania Regulations, Sections 127.201 through 127.204 pertain to the definitions of major source and major modified source (modification to an existing major source) for each of the affected pollutants: VOC, $NO_X$, PM–10, PM–10 precursors, PM, $SO_X$, CO, and Pb. Pennsylvania's definitions of major source thresholds are consistent with federal requirements, as are Pennsylvania's definitions of significant emissions increases, and its definitions of ''significant'' air quality impacts.

In severe ozone nonattainment areas (the Philadelphia area) a major source of

VOCs or of $NO_X$ is defined as one which has the potential to emit at least 25 TPY VOC or 25 TPY $NO_X$. In serious ozone nonattainment areas (which Pennsylvania does not have at this time), a major source is defined as one that has the potential to emit at least 50 TPY VOC or 50 TPY $NO_X$. Pennsylvania's regulation also includes certain special modification provisions, at Section 127.203(c) (discussed below at II. B.), for determining applicability in severe or serious ozone nonattainment areas.

In severe ozone nonattainment areas the regulation applies to either ''[a] new facility with the potential to emit 25 tons or more per year of $NO_X$ or VOCs,'' or to ''[a] modification to an existing facility with the potential to emit 25 tons or more per year of $NO_X$ or VOC, or a new source at an existing facility resulting in an increase in the potential to emit either VOC or $NO_X$ which, when aggregated with the other emissions increases determined in accordance with subsection (c)(1), results in an increase of 25 tons per year or 1,000 pounds per day or 100 pounds per hour of VOC or $NO_X$, or more, whichever is more restrictive.'' Section 127.203(b)(3).[1]

In serious ozone nonattainment areas the regulation applies to either ''[a] new facility with the potential to emit 50 tons or more per year of $NO_X$ or VOCs,'' or to ''[a] modification to an existing facility with the potential to emit 50 tons or more per year of VOC or $NO_X$, or a new source at an existing facility resulting in an increase in the potential to emit either VOC or $NO_X$ which, when aggregated with the other emissions increases determined in accordance with subsection (c)(1), results in an increase of 25 tons per year, 1,000 pounds per day or 100 pounds per hour of VOC or $NO_X$, or more, whichever is more restrictive.'' Section 127.203(b)(2). There are currently no areas in Pennsylvania that have been classified as serious nonattainment for ozone.

All areas in Pennsylvania other than the Philadelphia severe ozone nonattainment area are treated as moderate ozone nonattainment areas because they are classified as moderate or because the entire Commonwealth is in the OTR. In these areas the Pennsylvania regulation applies to either ''[a] new facility with the potential to emit 100 tons or more per year of $NO_X$ or 50 tons or more per year of VOCs,'' or to ''[a] modification to an existing facility with the potential to emit 100 tons or more per year of $NO_X$ or 50 tons or more per year of VOCs, or a new source at an existing facility resulting in an increase in the potential to emit either VOC or $NO_X$ which, when aggregated with the other emissions increases determined in accordance with Section 127.211, results in an increase of 40 tons per year, 1,000 pounds per day or 100 pounds per hour of VOC or $NO_X$, or more, whichever is more restrictive.'' Section 127.203(b)(1).

The major source size threshold for new sources of PM–10, PM–10 precursors, and PM is 100 TPY. A major modification is defined as a modification of a major source resulting in a significant increase in emissions. A significant increase in emissions is defined as an increase (aggregated with other applicable increases over a specified period of years, in accordance with Section 127.211) in the potential to emit PM–10 of 15 TPY, of PM of 25 TPY, or of PM or PM–10 of 1000 pounds per day or 100 pounds per hour, whichever is more restrictive. The significant air quality impact levels for PM–10, PM–10 precursors and PM are 1.00 microgram/cubic meter (microgram/$m^3$) on an annual and 5.00 micrograms/$m^3$ on an 24-hour average.

The major source size threshold for new sources of PM–10, PM–10 precursors, and PM is 100 TPY. A major modification is defined as a modification of a major source resulting in a significant increase in emissions. A significant increase in emissions is defined as an increase (aggregated with other applicable increases over a specified period of years, in accordance with Section 127.211) in the potential to emit PM–10 of 15 TPY, of PM of 25 TPY, or of PM or PM–10 of 1000 pounds per day or 100 pounds per hour, whichever is more restrictive. The significant air quality impact levels for PM–10, PM–10 precursors and PM are 1.00 microgram/cubic meter (microgram/$m^3$) on an annual and 5.00 micrograms/$m^3$ on an 24-hour average.

The major source size threshold for new $SO_X$ sources is 100 TPY. A major modification is defined as a modification of a major source resulting in a significant increase in emissions. A significant increase in emissions is defined as an increase in the potential to emit $SO_X$ (aggregated with other applicable increases over a specified period of years, in accordance with Section 127.211) of 40 TPY, 1000 pounds per day or 100 pounds of $SO_X$ per hour, whichever is more restrictive. The significant air quality impact levels for $SO_X$ are 1.00 microgram/$m^3$ on an annual average, 5.00 micrograms/$m^3$ on a 24-hour average, and 25.00 micrograms/$m^3$ on a 3-hour average.

The major source size threshold for new CO sources is 100 TPY. A major modification is defined as a modification to a major source resulting in a significant emissions increase. A significant increase in emissions is defined as an aggregated increased potential to emit CO of at least 50 TPY, 1000 pounds per day or 100 pounds per hour, whichever is more restrictive. The significant air quality impact levels for CO are 0.5 milligrams/cubic meter (milligrams/$m^3$)on an 8-hour average and 2.0 milligrams/$m^3$ on a 1-hour average.

For new Pb sources, the major source size threshold for NSR applicability is 100 TPY. A significant increase in emissions is defined as an aggregated increased potential to emit Pb of 0.6 TPY, 10 pounds per day or 1 pound per hour, whichever is more restrictive. The significant air quality impact level is 0.1 micrograms/$m^3$ on a 24-hour average.

*B. Special Modification Provisions*

The special modification provisions in the CAA at section 182(c) (6) through (8) are incorporated into the Pennsylvania regulation in Section 127.203(c) (1) through (3). These provisions are applicable to VOC or $NO_X$ sources locating in serious or severe ozone nonattainment areas. Currently there are no serious areas in Pennsylvania. Section 127.203(c)(1) specifies that sources are to aggregate their potential emissions over a consecutive 5-year period in order to determine whether the de minimis level of 25 TPY, 1000 pounds per day or 100 pounds per hour is exceeded. This provision further specifies that the 5-year contemporaneous period cannot extend back beyond January 1, 1991 or the design year of the most recent attainment demonstration, whichever is more recent. Section 127.203(c)(2) applies to facilities with potential emissions of VOC or $NO_X$ of less than 100 TPY where the modification results in an other than de minimis increase in emissions. The owner or operator may choose to offset the emissions of the proposed source with those elsewhere in the same facility at a ratio of at least 1.3 to 1 in order to avoid having the proposed source being considered an applicable modification under these regulations. If the facility does not offset at the required ratio, the change shall be considered an applicable modification, but the facility would be required to install BACT instead of LAER, and to meet Pennsylvania's BAT requirements. Section 127.203(c)(3) applies to facilities whose potential emissions of

[1] Subsection (c)(1) refers to certain special rules for modifications to VOC or $NO_X$ facilities located in serious and severe nonattainment areas for ozone.

VOC or $NO_X$ are greater than or equal to 100 TPY. The source may choose to offset the emissions from the proposed source with emission reductions elsewhere in the same facility at an internal offset ratio of 1.3 to 1 in order to avoid installing LAER. The source is still required to install technology to meet Pennsylvania's BAT requirements. Pennsylvania's regulations pertaining to the special modification provisions are consistent with the CAA's requirements.

**C. Provisions for Emission Reduction Credits**

Section 127.211 of the Pennsylvania regulation states the applicability criteria for determining whether a source is subject to the new source regulations. Included in these criteria is a requirement that all sources determined to be major (new or modified) must have emission reduction credits certified by Pennsylvania through the emission reduction credit (ERC) registry, established in Sections 127.206 through 127.210. Pennsylvania requires that ERCs be generated after January 1, 1991, which is consistent with the baseline that will be used in Pennsylvania's rate of progress demonstrations and demonstrations of attainment.

All ERCs are required to be made federally enforceable in the plan approval, which will specify that the emissions decrease is federally enforceable on or before the commence construction date. Detailed information required to accompany a source's application to register ERCs is provided in Section 127.207. Pennsylvania retains control over all ERCs deposited into the registry and all ERCs withdrawn for use from the registry. All Pennsylvania sources requiring emission offsets must obtain their ERCs through the Pennsylvania ERC registry. Out-of-state sources may deposit ERCs into the Pennsylvania registry or trade ERCs provided there is reciprocity between Pennsylvania and the other state and only upon approval through SIP approved rules and procedures, including an EPA approved SIP revision.

The registry listing the ERCs available, along with other pertinent information, will be published in the *Pennsylvania Bulletin* on a quarterly basis. ERCs generated through the curtailment or shutdown of a source, and which are not included in a plan approval and used as offsets expire for use as offsets 10 years after the date the facility ceased emitting those emissions. ERCs used for netting have a shorter lifetime, as specified in Section 127.211. The offset ratios, based on an area's nonattainment classification or location in the OTR, are located in Section 127.210. Pennsylvania requires that fugitive VOC emissions, regardless of the location of the source in the Commonwealth, be offset by at least a 1.3:1 ratio. The offset ratios are consistent with those required in the CAA.

For ERCs banked prior to January 1, 1991, Section 127.208(6) prohibits the use of ERCs in an area with a higher nonattainment classification than the one in which they were generated. Section 127.205(2) requires proposed new source applicants to demonstrate that all other facilities under their operation or ownership are in compliance or on a schedule for compliance approved by Pennsylvania. Section 127.205(5) requires proposed new or modified source owners or operators to conduct alternative sites and benefits analyses to demonstrate that the benefits of the proposed source significantly outweigh the environmental and social costs imposed on the Commonwealth as a result of the proposed source's location, construction or modification. Section 127.206(I) clearly prohibits use of ERCs to achieve compliance with Reasonably Available Control Technology (RACT), Best Available Technology (BAT), New Source Performance Standards (NSPS), Best Available Control Technology (BACT), Lowest Achievable Emission Reductions (LAER) or other emissions limitations required by the CAA or Pennsylvania's Clean Air Act.

**D. Prior Shutdown Credits**

An issue associated with this proposed rulemaking action is that Pennsylvania's regulations allow sources located in nonattainment areas which lack approved attainment demonstrations to take credit for emission reductions obtained from shutdowns or curtailments of production or operating hours in cases where the reductions took place prior to the source's application for a new source review permit. Current EPA regulations, developed prior to the CAA Amendments of 1990, provide that states having nonattainment areas without EPA approved attainment demonstrations may allow sources located in those areas to take credit for emission reductions resulting from shutdowns or curtailments of production or operating hours only if the reductions occurred on or after the date the new proposed source or modification files a permit application, or, if the applicant can establish that the proposed new source is a replacement for the shutdown or curtailed source. See 40 CFR part 51.165(a)(3)(ii)(C)(2). Thus, under current EPA regulations, states are prohibited from crediting emission reductions which occurred prior to the date the new proposed source or modification files a permit application (prior shutdown or curtailment credits). It is important to note that Pennsylvania's current SIP regulations do not contain this so called ''shutdown prohibition.''

Pennsylvania's revised NSR regulations, 25 Pa. Code Chapter 127, Subchapter E, affirmatively allow sources to take credit for emission reductions resulting from shutdowns or curtailments of production or operating hours which occurred after January 1, 1991, or the design year of the most recent attainment demonstration, whichever is more recent. Because Pennsylvania's regulation would allow sources located in nonattainment areas lacking approved attainment plans to take credit for shutdowns or curtailments which occurred prior to the date a new proposed source or modification files a permit application, Pennsylvania's regulation appears not to conform with the existing EPA regulatory prohibition on the use of prior shutdown or curtailment credits found at 40 CFR part 51.165(a)(3)(ii)(C)(2).

However, as explained above, on July 23, 1996, EPA published in the **Federal Register** a comprehensive rulemaking which proposed significant changes to the current PSD and nonattainment NSR rules. This proposed rulemaking is hereinafter referred to as the ''NSR Reform Rulemaking.'' See 61 FR 38311. The NSR Reform Rulemaking proposes to revise regulations for the approval and promulgation of SIPs and the requirements for preparation, adoption, and submittal of implementation plans governing the NSR programs mandated by Parts C and D of Title I of the CAA. Specifically, section VII.A of EPA's NSR Reform Rulemaking, entitled ''Emissions Credits Resulting From Source Shutdowns and Curtailments'', proposes to eliminate the current restrictions on crediting of emissions reductions from source shutdowns and curtailments that occurred after 1990. In the NSR Reform Rulemaking, EPA proposes two different alternatives for eliminating the prior shutdown prohibition. The second of these alternatives, entitled ''Shutdown Alternative 2'', generally lifts the current offset restriction applicable to emissions reductions from source shutdowns and source curtailments for all nonattainment areas and all pollutants where such reductions occur after the baseyear of the emissions

inventory used (or to be used) to meet the applicable provisions of Part D of the CAA. See proposed Section 51.165(a)(3)(ii)(C)(5) [Alternative 2], 61 FR 38314. Under this alternative, states could allow emissions reductions from source shutdowns or curtailments to be used as offsets in all nonattainment areas and for all pollutants provided such reductions occurred after the baseyear of the emissions inventory used by the state to meet the applicable provisions of Part D of the CAA.

As explained above, Pennsylvania's NSR regulation allows sources to take credit for emission reductions resulting from shutdowns or curtailments of production or operating hours which occurred after January 1, 1991, or the design year of the most recent attainment demonstration, whichever is more recent. Because of this regulatory language, Pennsylvania would not have to modify its NSR rule if, in the future, an attainment demonstration were required to be based on a more recent design year. Currently, the earliest date by which emissions reductions from source shutdowns or curtailments would be creditable towards offsets under Pennsylvania's NSR rule is on or after January 1, 1991. This is because 1990 is the base year required to be used to satisfy the Part D progress and attainment demonstration requirements of the CAA. That date would move forward to the new design year of any subsequent attainment demonstration required to be done by Pennsylvania. Thus, EPA believes that Pennsylvania's NSR regulation is generally consistent with ''Shutdown Alternative 2'' as described in EPA's proposed NSR Reform Rulemaking since both the Pennsylvania rule and Alternative 2 allow sources to take credit only for emissions reductions from shutdowns or curtailments occurring after January 1, 1991. Because Pennsylvania's NSR regulation is consistent with Alternative 2 of EPA's proposed NSR Reform Rulemaking (as discussed above), and because approval of the revised version of Pennsylvania's NSR regulation submitted on February 4, 1994 would strengthen the SIP to be consistent with the CAA's provisions for NSR, EPA believes that Pennsylvania's NSR revised regulation warrants limited approval. If EPA promulgates Alternative 2, this limited approval would convert to a full approval.

The alternative shutdown-related alternative set forth in EPA's NSR Reform Rulemaking proposal is entitled ''Shutdown Alternative 1.'' This alternative proposes, for ozone nonattainment areas, to lift the current offset restriction applicable to emissions reductions from source shutdowns and curtailments in such areas without EPA-approved attainment demonstrations, provided the emissions reductions occur after November 15, 1990 and the area has kept current with the CAA's scheduled Part D ozone nonattainment planning requirements. See proposed Section 51.165(a)(3)(ii)(C) (5) and (6) [Alternative 1].

EPA acknowledges that either Alternative 1 or 2 may be eventually incorporated into the final NSR Reform Rulemaking upon its final promulgation. It is also noted that while EPA is with this rulemaking action proposing to grant limited approval of Pennsylvania's NSR regulation based on the rule's consistency with Shutdown Alternative 2 in EPA's NSR Reform Rulemaking, the Commonwealth may need to amend its NSR regulation if Shutdown Alternative 1 rather than Shutdown Alternative 2 is promulgated. If Alternative 1 is promulgated, EPA would determine the status of Pennsylvania's conformance with Part D ozone planning requirements. If Pennsylvania's SIP was not current with the Part D ozone planning requirements for any nonattainment area, EPA would make a SIP call for Pennsylvania to amend its NSR rule to conform with Alternative 1 as provided in EPA's final NSR Reform Rulemaking.

## III. Proposed Action

EPA is proposing limited approval of the revisions to the Pennsylvania SIP NSR regulations submitted on February 4, 1994 because such approval would strengthen the SIP so that it meets the NSR requirements of the CAA as discussed herein. EPA is soliciting public comments on the issues discussed in this document or on other relevant matters. These comments will be considered before taking final action. Interested parties may participate in the Federal rulemaking procedure by submitting written comments to the EPA Regional Office listed in the **ADDRESSES** section of this document.

Nothing in this action should be construed as permitting or allowing or establishing a precedent for any future request for revision to any state implementation plan. Each request for revision to the state implementation plan shall be considered separately in light of specific technical, economic, and environmental factors and in relation to relevant statutory and regulatory requirements.

## IV. Administrative Requirements

### *A. Executive Order 12866*

This action has been classified as a Table 3 action for signature by the Regional Administrator under the procedures published in the **Federal Register** on January 19, 1989 (54 FR 2214–2225), as revised by a July 10, 1995 memorandum from Mary Nichols, Assistant Administrator for Air and Radiation. The Office of Management and Budget (OMB) has exempted this regulatory action from E.O. 12866 review.

### *B. Regulatory Flexibility Act*

Under the Regulatory Flexibility Act, 5 U.S.C. 600 *et seq.*, EPA must prepare a regulatory flexibility analysis assessing the impact of any proposed or final rule on small entities. 5 U.S.C. 603 and 604. Alternatively, EPA may certify that the rule will not have a significant impact on a substantial number of small entities. Small entities include small businesses, small not-for-profit enterprises, and government entities with jurisdiction over populations of less than 50,000.

SIP approvals under section 110 and subchapter I, part D of the Clean Air Act do not create any new requirements but simply approve requirements that the state is already imposing. Therefore, because the Federal SIP approval does not impose any new requirements, the Administrator certifies that it does not have a significant impact on any small entities affected. Moreover, due to the nature of the Federal-state relationship under the CAA, preparation of a flexibility analysis would constitute Federal inquiry into the economic reasonableness of state action. The Clean Air Act forbids EPA to base its actions concerning SIPs on such grounds. *Union Electric Co.* v. *U.S. EPA*, 427 U.S. 246, 255–66 (1976); 42 U.S.C. 7410(a)(2).

### *C. Unfunded Mandates*

Under section 202 of the Unfunded Mandates Reform Act of 1995 (''Unfunded Mandates Act''), signed into law on March 22, 1995, EPA must prepare a budgetary impact statement to accompany any proposed or final rule that includes a Federal mandate that may result in estimated costs to state, local, or tribal governments in the aggregate; or to private sector, of $100 million or more. Under section 205, EPA must select the most cost-effective and least burdensome alternative that achieves the objectives of the rule and is consistent with statutory requirements. Section 203 requires EPA to establish a plan for informing and

advising any small governments that may be significantly or uniquely impacted by the rule.

EPA has determined that the approval action proposed does not include a Federal mandate that may result in estimated costs of $100 million or more to either state, local, or tribal governments in the aggregate, or to the private sector. This Federal action approves pre-existing requirements under state or local law, and imposes no new requirements. Accordingly, no additional costs to state, local, or tribal governments, or to the private sector, result from this action.

The Administrator's decision to approve or disapprove Pennsylvania's NSR SIP revision will be based on whether it meets the requirements of section 110(a)(2)(A)–(K) and part D of the Clean Air Act, as amended, and EPA regulations in 40 CFR Part 51.

**List of Subjects in 40 CFR Part 52**

Environmental protection, Air pollution control, Carbon monoxide, Hydrocarbons, Incorporation by reference, Intergovernmental relations, Nitrogen dioxide, Ozone, Particulate matter, Reporting and recordkeeping requirements, Sulfur oxides.

**Authority:** 42 U.S.C. 7401–7671q.

Dated: April 22, 1997.

**Stanley L. Laskowski,**

*Acting Regional Administrator, Region III.*

[FR Doc. 97–11492 Filed 5–1–97; 8:45 am]

BILLING CODE 6560–50–P

---

## ENVIRONMENTAL PROTECTION AGENCY

## 40 CFR Part 81

**[ME3–1–5258b; A–1–FRL–5815–3]**

## Approval and Promulgation of Redesignation; Maine; Redesignation of Millinocket to Attainment for Sulfur Dioxide

**AGENCY:** Environmental Protection Agency (EPA).

**ACTION:** Proposed rule.

**SUMMARY:** EPA is proposing to approve a redesignation request submitted by the State of Maine. This action redesignates Millinocket to attainment for Sulfur Dioxide ($SO_2$). In the Final Rules Section of this **Federal Register**, EPA is approving the State's redesignation as a direct final rule without prior proposal because the Agency views this as a noncontroversial revision amendment and anticipates no adverse comments. A detailed rationale for the approval is set forth in the direct final rule. If no adverse comments are received in response to that direct final rule, no further activity is contemplated in relation to this proposed rule. If EPA receives adverse comments, the direct final rule will be withdrawn and all public comments received will be addressed in a subsequent final rule based on this proposed rule. EPA will not institute a second comment period on this proposal. Any parties interested in commenting on this proposal should do so at this time.

**DATES:** Comments must be received on or before June 2, 1997.

**ADDRESSES:** Comments may be mailed to Susan Studlien, Deputy Director, Office of Ecosystems Protection, Region I, JFK Federal Bldg., Boston, MA 02203. Copies of the State submittal and EPA's technical support document are available for public inspection during normal business hours, by appointment at the Office of Ecosystems Protection, U.S. Environmental Protection Agency, Region I, One Congress Street, 10th floor, Boston, MA and the Bureau of Air Quality Control, Department of Environmental Protection, 71 Hospital Street, Augusta, ME 04333.

**FOR FURTHER INFORMATION CONTACT:** Ian D. Cohen, (617) 565–3568.

**SUPPLEMENTARY INFORMATION:** For additional information, see the direct final rule which is located in the Rules Section of this **Federal Register**.

**Authority:** 42 U.S.C. 7401–7671q.

Dated: March 27, 1997.

**John P. DeVillars,**

*Regional Administrator, Region I.*

[FR Doc. 97–11484 Filed 5–1–97; 8:45 am]

BILLING CODE 6560–50–P

---

## ENVIRONMENTAL PROTECTION AGENCY

## 40 CFR Part 180

**[OPP–300486; FRL–5617–5]**

**RIN AC18**

## Bromoxynil; Pesticide Tolerances

**AGENCY:** Environmental Protection Agency (EPA).

**ACTION:** Proposed rule.

**SUMMARY:** This document proposes to establish the following time-limited tolerances, to expire on January 1, 1998, for the residues of the herbicide bromoxynil (3,5-dibromo-4-hydroxybenzonitrile) and its metabolite DBHA (3,5-dibromo-4-hydrobenzoic acid) resulting from the application of octanoic and heptanoic acid esters of bromoxynil to cotton: undelinted cottonseed at 7 ppm, cotton gin byproducts at 50 ppm, cotton hulls at 21 ppm. (Active ingredient codes are 35302 for the octanoic acid ester, and 128920 for the heptanoic acid ester. CAS Reg. Nos. are 1689-99-2 for the octanoic acid ester, and 56634-95-8 for the heptanoic acid ester.) In addition, this document proposes to revise tolerances for the residues of bromoxynil, resulting from the application of octanoic and heptanoic acid esters of bromoxynil to cotton, in or on cattle, hogs, horses, goats, and sheep to 0.5 ppm in meat, 3.0 ppm in meat by-products, and 1.0 ppm in fat; and in milk to 0.1 ppm. Further, this document proposes to establish tolerances for residues of bromoxynil, resulting from the application of octanoic and heptanoic acid esters of bromoxynil to cotton, at 0.05 ppm in eggs; and at 0.05 ppm in poultry meat, meat byproducts, and fat. EPA proposes that the tolerances for the cotton commodities expire on January 1, 1998. Rhone-Poulenc AG Co. submitted a petition to EPA under the Federal Food, Drug, and Cosmetic Act as amended by the Food Quality Protection Act of 1996 requesting a tolerance on cottonseed.

**DATES:** Comments, identified by the docket control number ''OPP–300486,'' must be received on or before May 19, 1997.

**ADDRESSES:** By mail, submit written comments to: Public Response and Program Resources Branch, Field Operations Division (7506C), Office of Pesticide Programs, Environmental Protection Agency, 401 M St., SW., Washington, DC 20460. In person, bring comments to Rm. 1132, CM #2, 1921 Jefferson Davis Highway, Arlington, VA 22202.

Comments and data may also be submitted electronically by following the instructions under Unit IX. of this document. No Confidential Business Information (CBI) should be submitted through e-mail.

**FOR FURTHER INFORMATION CONTACT:** By mail: Jim Tompkins, Product Manager (PM) 25, Registration Division (7505C), Office of Pesticide Programs, Environmental Protection Agency, 401 M St., SW., Washington, DC 20460. Office location, telephone number and e-mail address: Rm. 241, CM #2, 1921 Jefferson Davis Hwy., Arlington, VA, (703) 305-5697, e-mail: tompkins.jim@epamail.epa.gov.

**SUPPLEMENTARY INFORMATION:** In the **Federal Register** of May 24, 1995 (60 FR 27414), EPA established a time-limited tolerance under section 408 of the Federal Food, Drug, and Cosmetic Act (FFDCA), 21 U.S.C. 346a, for residues of the herbicide bromoxynil, (3,5-dibromo-

4-hydroxybenzonitrile) on cottonseed. This tolerance expired on April 1, 1997. The tolerance was established in response to a petition filed by the Rhone-Poulenc AG Co., P.O. Box 12014, 2 T.W. Alexander Drive, Research Triangle Park, NC 27709.

In the **Federal Register** of December 24, 1996 (61 FR 67807) (FRL–5576–8), EPA issued a notice of filing that stated that the Rhone-Poulenc AG Co. had submitted a pesticide petition to EPA proposing to extend the time-limited tolerance on cottonseed. The Agency is issuing this proposed rule because, after review of the petition, the Agency has determined that as a result of bromoxynil use on cotton: (1) A higher tolerance will be needed for cottonseed; (2) existing tolerances for bromoxynil on animal commodities (meat, meat by-products, fat, and milk) need to be raised; and (3) additional tolerances will be needed for other cotton commodities (undelinted cottonseed and cotton gin byproducts) and other animal commodities (poultry meat, meat by-products, fat, and eggs). Comments in response to the notice of filing were received from the Union of Concerned Scientists, the Pesticide Action Network, the Edmonds Institute, Friends of the Earth, and the Environmental Defense Fund. Many of the issues raised by these comments are addressed in this document. To the extent specific comments have not been addressed herein, they will be addressed in any final action on this proposal.

## I. Statutory Background

Section 408 of the Federal Food, Drug, and Cosmetic Act (FFDCA), 21 U.S.C. 301 *et seq.*, as amended by the Food Quality Protection Act of 1996, Pub. L. 104-170) authorizes the establishment of tolerances (maximum residue levels), exemptions from the requirement of a tolerance, modifications in tolerances, and revocation of tolerances for residues of pesticide chemicals in or on raw agricultural commodities and processed foods. Without a tolerance or exemption, food containing pesticide residues is considered to be unsafe and therefore ''adulterated'' under section 402(a) of the FFDCA, and hence may not legally be moved in interstate commerce. For a pesticide to be sold and distributed, the pesticide must not only have appropriate tolerances under the FFDCA, but also must be registered under section 3 of the Federal Insecticide, Fungicide, and Rodenticide Act (FIFRA, 7 U.S.C. 136 *et seq.*).

Section 408 was substantially amended by the Food Quality Protection Act of 1996 (FQPA). Among other things, the FQPA amends the FFDCA to bring all EPA pesticide tolerance-setting activities under a new section 408 with a new safety standard and new procedures. New section 408(b)(2)(A)(I) allows EPA to establish a tolerance (the legal limit for a pesticide chemical residue in or on a food) only if EPA determines that the tolerance is ''safe.'' Section 408(b)(2)(A)(ii) defines ''safe'' to mean that ''there is a reasonable certainty that no harm will result from aggregate exposure to the pesticide chemical residue, including all anticipated dietary exposures and all other exposures for which there is reliable information.'' This includes exposure through food, drinking water, and from pesticide use in gardens, lawns, or buildings (residential and other indoor uses) but does not include occupational exposure. Section 408(b)(2)(C) requires EPA to give special consideration to exposure of infants and children to the pesticide chemical residue in establishing a tolerance and to ''ensure that there is a reasonable certainty that no harm will result to infants and children from aggregate exposure to the pesticide chemical residue. . . .''

## II. Risk Assessment and Statutory Findings

EPA performs a number of analyses to determine the risks from aggregate exposure to pesticide residues. First, EPA determines the toxicity of pesticides based primarily on toxicological studies using laboratory animals. These studies address many adverse health effects, including (but not limited to) reproductive effects, developmental toxicity, toxicity to the nervous system, and carcinogenicity. For many of these studies, a dose response relationship can be determined, which provides a dose that causes adverse effects (threshold effects) and doses causing no observed effects (the ''no observed effect level'' or ''NOEL'').

Once the studies have been evaluated and the observed effects have been determined to be threshold effects, EPA generally divides the NOEL from the study with the lowest NOEL by an uncertainty factor (usually 100 or more) to determine the Reference Dose (RfD). The RfD is a level at or below which daily aggregate exposure over a lifetime will not pose appreciable risks to human health. An uncertainty factor (sometimes called a ''safety factor'') of 100 is commonly used since it is assumed that people may be up to 10 times more sensitive to pesticides than the test animals, and that one person or subgroup of the population (such as infants and children) could be up to 10 times more sensitive to a pesticide than another. In addition, EPA assesses the potential risks to infants and children based on the weight of the evidence of the toxicology studies and determines whether an additional uncertainty factor is warranted. An aggregate daily exposure to a pesticide residue at or below the RfD (expressed as 100 percent or less of the RfD) is generally considered by EPA to pose a reasonable certainty of no harm. For threshold effects other than those assessed under the RfD, EPA generally calculates a margin of exposure (MOE). The MOE is a measure of how close the exposure comes to the NOEL. The NOEL is selected from a study of appropriate duration and route of exposure. The MOE is the NOEL from the selected study divided by exposure. MOEs greater than 100 are generally considered to show a reasonable certainty of no harm.

Lifetime feeding studies in two species of laboratory animals are conducted to screen pesticides for cancer effects. When evidence of increased cancer is noted in these studies, the Agency conducts a weight of the evidence review of all relevant toxicological data including short term and mutagenicity studies and structure activity relationship. Once a pesticide has been classified as a potential human carcinogen, different types of risk assessments (e.g., linear low dose extrapolations or margin of exposure calculation based on the appropriate NOEL) will be carried out based on the nature of the carcinogenic response and the Agency's knowledge of its mode of action.

In examining aggregate exposure, FFDCA section 408 requires that EPA take into account available and reliable information concerning exposure from the pesticide residue in the food in question, residues in other foods for which there are tolerances, and other non-occupational exposures, such as where residues leach into groundwater or surface water that is consumed as drinking water and exposures resulting from indoor and outdoor residential uses. Dietary exposure to residues of a pesticide in a food commodity are estimated by multiplying the average daily consumption of the food forms of that commodity by the tolerance level or the anticipated pesticide residue level. The Theoretical Maximum Residue Contribution (TMRC) is an estimate of the level of residues consumed daily if each food item contained pesticide residues equal to the tolerance. The TMRC is a ''worst-case'' estimate since it is based on the assumptions that food

contains pesticide residues at the tolerance level and that 100 percent of the crop is treated by pesticides that have established tolerances. If the TMRC exceeds the RfD or poses a lifetime cancer risk that is greater than approximately one in a million, EPA attempts to derive a more accurate exposure estimate for the pesticide by evaluating additional types of information which show, generally, that pesticide residues in most foods when they are eaten are well below established tolerances.

## III. Toxicology Profile

EPA has evaluated the available toxicity data and considered its validity, completeness, and reliability as well as the relationship of the results of the studies to human risk. EPA has also considered available information concerning the variability of the sensitivities of major identifiable subgroups of consumers, including infants and children. Bromoxynil is applied to crops in the form of bromoxynil octanoate and bromoxynil heptanoate. These starting materials are metabolized to bromoxynil phenol. The nature of the toxic effects caused by bromoxynil is discussed below.

### *A. Phenol Technical-grade Bromoxynil*

1. Several acute toxicity studies were performed, placing technical-grade bromoxynil in Toxicity Category II.

2. An acute oral toxicity study in rats resulted in $LD_{50}$=81 milligrams/kilograms (mg/kg) (males) and 93 mg/kg (females).

3. A 2–year combined feeding/carcinogenicity study was conducted with rats administered (oral) dosages of 0, 60, 190, or 600 parts per million (ppm) (0, 2.6, 8.2, or 28 mg/kg/day in males; 0, 3.3, 11.0, or 41 mg/kg/day in females) bromoxynil phenol in the diet. In males, the NOEL is 2.6 mg/kg/day, and the lowest-effect-level (LEL) is 8.2 mg/kg/day. In females, the NOEL is 3.3 mg/kg/day, and the LEL is 11.0 mg/kg/day. This study did not demonstrate any increase in tumor incidences in either male or female rats.

4. A 120–week combined feeding/carcinogenicity study was conducted with rats administered bromoxynil phenol in the diet at dose levels of 0, 10, 30, or 100 ppm (0, 0.5, 1.5, or 5 mg/kg/day). In both males and females, the NOEL and LEL was 5 mg/kg/day and >5 mg/kg/day, respectively. This study was negative for carcinogenicity. This study is considered supplementary.

5. A 1–year chronic oral study was conducted with dogs administered bromoxynil phenol at dose levels of 0, 0.1, 0.3, 1.5, or 7.5 mg/kg/day in capsules. A threshold NOEL/LOEL of 1.5 mg/kg/day was determined in this study based on slightly decreased body weight gain in males. At 7.5 mg/kg/day, additional toxic effects were observed in both males and females. The RfD is based on this study.

6. An 18–month carcinogenicity study was conducted with mice administered bromoxynil phenol at dose levels of 0, 10, 30, or 100 ppm (0, 1.3, 3.9, or 13 mg/kg/day) in the diet. For males, dose-related increases in hyperplastic nodules and liver adenomas/carcinomas were observed which were statistically significant at the 13 mg/kg/day dose level. Increased relative liver weights were also observed at 13 mg/kg/day. In females, increased absolute kidney weights and relative liver and kidney weights were observed at 13 mg/kg/day. The study was negative for carcinogenicity for females, but the doses were considered to be not high enough.

7. An 18–month carcinogenicity study was conducted with mice administered bromoxynil phenol in the diet at dose levels of 0, 20, 75, or 300 ppm (0, 3.1, 12, or 46 mg/kg/day in males; 0, 3.7, 14, or 53 mg/kg/day in females). In males, treatment-related increases in liver adenomas/carcinomas were observed at all dose levels. At 12 mg/kg/day and higher in males, gross pathologic and histopathologic effects were also noted in the liver. In females, treatment-related increases in liver carcinomas were observed at 53 mg/kg/day. At 14 mg/kg/day and higher in females, histopathologic effects were also noted in the liver. The results of this study are discussed more fully in Unit IV. of this preamble addressing carcinogenicity classification.

8. A developmental toxicity study was conducted with rats administered (orally) bromoxynil phenol at dose levels of 0, 4, 12.5, or 40 mg/kg/day. The maternal NOEL and LEL are 12.5 mg/kg/day and 40 mg/kg/day, respectively. The developmental NOEL and LEL are 4 mg/kg/day and 12.5 mg/kg/day, respectively, based on increased incidence of supernumerary ribs.

9. A developmental toxicity study was conducted with rats administered (orally) bromoxynil phenol at dose levels of 0, 5, 15, or 35 mg/kg/day. The maternal NOEL and LEL are 5 mg/kg/day and 15 mg/kg/day, respectively. The developmental NOEL and LEL are less than 5 mg/kg/day and 5 mg/kg/day, respectively, based on increased incidence of supernumerary ribs.

10. A developmental toxicity study was conducted with rats administered (orally) bromoxynil phenol at dose levels of 0, 1.7, 5, or 15 mg/kg/day. The maternal NOEL and LEL are 5 mg/kg/day and 15 mg/kg/day, respectively. The developmental NOEL and LEL are 5 mg/kg/day and 15 mg/kg/day, respectively, based on increased incidence of supernumerary ribs.

11. A developmental toxicity study was conducted with rabbits administered (orally) bromoxynil phenol at dose levels of 0, 15, 30, or 60 mg/kg/day. The maternal NOEL and LEL are 15 mg/kg/day and 30 mg/kg/day, respectively. The developmental NOEL and LEL are <15 mg/kg/day and 15 mg/kg/day, respectively, based on increased incidence of supernumerary ribs.

12. A developmental toxicity study was conducted with rabbits administered (orally) bromoxynil phenol at dose levels of 0, 30, 45, or 60 mg/kg/day. The maternal NOEL and LEL are 45 mg/kg/day and 60 mg/kg/day, respectively. The developmental NOEL and LEL are <30 mg/kg/day and 30 mg/kg/day, respectively, based on decreased fetal weights.

13. A developmental toxicity study was conducted with mice administered (orally) bromoxynil phenol at dose levels of 0, 11, 32, or 96 mg/kg/day. The maternal NOEL and LEL are 11 mg/kg/day and 32 mg/kg/day, respectively. The developmental NOEL and LEL are 32 mg/kg/day and 96 mg/kg/day, respectively, based on increased supernumerary ribs, decreased fetal weights, and unossified caudal vertebrae.

14. A reproduction study was conducted with rats administered (orally) bromoxynil phenol at dose levels of 0, 10, 50, or 250 ppm (0, 0.8, 4, or 21 mg/kg/day) in the diet for 2 generations. The systematic adult rat NOEL is 4 mg/kg/day, and the LEL is 21 mg/kg/day. The reproductive NOEL is 21 mg/kg/day, and the LEL is >21 mg/kg/day. The postnatal development NOEL is 4 mg/kg/day, and the LEL is 21 mg/kg/day.

15. A reproduction study was conducted with rats administered (orally) bromoxynil phenol at dose levels of 0, 30, 100, or 300 ppm (0, 1.5, 5, or 15 mg/kg/day) in the diet for 3 generations. The systemic adult rat NOEL is 1.5 mg/kg/day, and the LEL is 5 mg/kg/day. The reproductive NOEL is 15 mg/kg/day, and the LEL is >15 mg/kg/day. The offspring developmental NOEL is 5 mg/kg/day, and the LEL is 15 mg/kg/day. All the NOELs and LELs in this study are considered to be tentative.

16. Mutagenicity data included an unscheduled DNA synthesis study in rat primary hepatocytes (negative); an *in vitro* transformation assay in mouse cells (negative); a sister chromosomal

exchange study in CHO cells (negative); a forward mutation study in mouse lymphoma cells (negative without activation and positive with activation); a DNA repair test in *E. coli* (positive without and with activation); an *in vitro* chromosomal aberration assay in CHO cells (negative without activation and positive with activation); two separate micronucleus assays in mice (both negative); a forward mutation assay in CHO cells (negative); and an Ames study in *Salmonella typhimurium* (negative with and without activation).

*B. Heptanoate Technical-grade Bromoxynil*

1. Several acute toxicity studies were performed, placing technical-grade bromoxynil heptanoate in Toxicity Category II.

2. An acute oral toxicity study in rats resulted in $LD_{50}$=362 mg/kg (males) and $LD_{50}$=292 mg/kg (females).

3. A general metabolism study was conducted with rats. Bromoxynil heptanoate is rapidly absorbed and widely distributed in most tissues. Most of the radioactivity was excreted in the urine, mostly in the form of bromoxynil phenol. There was no significant retention in tissues after 7 days. Essentially, bromoxynil heptanoate was metabolized to bromoxynil phenol via ester hydrolysis.

*C. Octanoate Technical-grade Bromoxynil*

1. Several acute toxicity studies were performed, placing technical-grade bromoxynil octanoate in Toxicity Category II.

2. An acute oral toxicity study in rats resulted in $LD_{50}$=400 mg/kg (males) and $LD_{50}$=238 mg/kg (females).

3. A 13-week oral study was conducted with rats administered bromoxynil octanoate at dose levels of 0, 150, 600, or 1,100 ppm (0, 11, 45, or 91 mg/kg/day in males; 0, 13, 55, or 111 mg/kg/day in females) in the diet. In males, the NOEL and LEL are 45 mg/kg/day and 91 mg/kg/day, respectively. In females, the NOEL and LEL are 13 mg/kg/day and 55 mg/kg/day, respectively.

4. A 13-week oral study was conducted with dogs administered bromoxynil octanoate in capsules at dose levels of 0, 0.43, 1.43, or 7.14 mg/kg/day. In males and females, the NOEL and LEL are 0.43 mg/kg/day and 1.43 mg/kg/day, respectively.

5. A developmental toxicity study was conducted with rats administered (orally) bromoxynil octanoate at dose levels of 0, 2.4, 7.3, or 21.8 mg/kg/day. The maternal NOEL and LEL are 7.3 mg/kg/day and 21.8 mg/kg/day, respectively. The developmental NOEL and LEL are 7.3 mg/kg/day and 21.8 mg/kg/day, respectively, based on increased supernumerary ribs and decreased fetal weights.

6. Mutagenicity data included the following: an Ames study in *Salmonella typhimurium* (negative with and without activation); a micronucleus assay in mice (negative); and an unscheduled DNA synthesis study in rat primary hepatocytes (negative).

7. A general metabolism study was conducted with rats. Bromoxynil octanoate is rapidly absorbed and widely distributed in most tissues. Most of the radioactivity was excreted in the urine, mostly in the form of bromoxynil phenol. There was no significant retention in tissues after 7 days. Essentially, bromoxynil octanoate was metabolized to bromoxynil phenol via ester hydrolysis.

## IV. Dose Response Assessment

1. *Carcinogenicity classification*. Using EPA's ''Guidelines for Carcinogen Risk Assessment'' published September 24, 1986 (51 FR 33992), EPA has classified bromoxynil as a Group ''C'', possible human carcinogen, with a Q1* for bromoxynil phenol of $1.03 \times 10^{-1}$ $(mg/kg/day)^{-1}$. This classification was based primarily on results in two mouse carcinogenicity studies. In one study, a statistically significant increase in and combined liver adenomas/carcinomas was observed in male mice at the highest dose tested. For carcinomas, there was not a statistically significant increase at any dose. A statistically significant increased incidence of neoplasms was not observed in female mice, but the doses for females were determined to be inadequate. In another study, a statistically significant increased incidence of combined liver adenomas/carcinomas was observed in male mice at all dose levels and in female mice at the highest dose. For carcinomas, the male mice had a statistically significant increase at the high and low dose (but not the mid-dose) and the females had a statistically significant increase at the high dose. Following a second pathology examination of the male mice, the results were a statistically significant increase at the low and high doses for combined adenomas/carcinomas and for carcinomas a statistically significant increase at the high dose. Bromoxynil was not carcinogenic in the rat. Information from the mutagenicity studies, which included three positive studies, provided additional support for the ''C'' classification.

2. *Reference Dose* (Rfd). For systemic effects other than cancer, the RfD represents the level at or below which daily aggregate dietary exposure over a lifetime will not pose appreciable risks to human health. The RfD is determined using the toxicological end-point or NOEL from the most sensitive mammalian toxicological study. To assure the adequacy of the RfD, the Agency uses an uncertainty factor in deriving it. The RfD for bromoxynil is 0.015 mg/kg/day based on the threshold NOEL/LOEL of 1.5 mg/kg/day determined in the 1-year chronic oral study in dogs using bromoxynil phenol as the test material. An uncertainty factor of 100 was used for interspecies extrapolation and intraspecies variability.

3. *Developmental toxicant determination*. Bromoxynil phenol and bromoxynil octanoate both induce developmental toxicity at levels below those which cause maternal toxicity. The induction of supernumerary ribs is the most sensitive indicator of developmental toxicity in rats, mice and in certain studies in rabbits. Other forms of developmental toxicity are observed at higher dose levels.

4. *Acute risk/developmental effects*. For acute dietary risk assessment, EPA has chosen to use the NOEL of 4 mg/kg/day, based on developmental effects in an oral rat developmental toxicity study (MRID # 40466802) at the LOEL of 5 mg/kg/day from a second oral rat developmental toxicity study (MRID # 00116558). Since the effect of concern, increased incidence of supernumerary ribs in fetuses, occurs in utero during gestation, this risk assessment is only directly applicable to females of child-bearing age (population sub-group of females 13+ yrs old).

5. *Acute risk/systemic effects other than developmental.* EPA has concluded that an additional endpoint of concern should be established for assessing the acute dietary risk for bromoxynil exposure to population groups (including infants and children) other than females 13+ years. Acute (one-day) dietary exposure estimates will be compared to an endpoint (NOEL) of 8 mg/kg/day derived from the data of a 13-week oral toxicity study in dogs using bromoxynil phenol as the test material (MRID 43166701). The LOEL was established at 12 mg/kg/day, based on increased incidence of panting on day 1 following a single oral dose of the test material. This suggests a compensatory reaction to the effects of the test material, which at higher doses is expressed as elevated body temperature.

## V. Aggregate Exposure Assessment

In examining aggregate exposure, FFDCA section 408(b)(2) directs EPA to

consider available information concerning exposures from pesticide residue in food, water, and all other nonoccupational exposures. The aggregate sources of exposure the Agency looks at includes food, drinking water (which includes both surface water and groundwater), and exposure from pesticide use in gardens, lawns, or buildings (residential and other indoor uses).

*A. Non-dietary (Residential ) Exposure Assessment*

Currently, there are no registered homeowner uses for bromoxynil and current labeling restricts all turfgrass use to non-residential areas. The possibility of post-application exposure to persons following bromoxynil application to nonresidential turfgrass exists, but is not likely to be significant in either amount or duration (and cannot be quantified at this point).

*B. Dietary Exposure Assessment*

Use of a agricultural pesticide may result, directly or indirectly, in pesticide residues in food. Primary residues or indirect/inadvertent residues in agricultural commodities are determined by chemical analysis. To account for the diversity of growing conditions, cultural practices, soil types, climates, crop varieties and methods of application of the pesticide, data from studies that represent the commodities are collected and evaluated to determine an appropriate level of residue that would not be exceeded if the pesticide is used as represented in the studies. In evaluating food exposures, EPA takes into account varying consumption patterns of major identifiable subgroups of consumers, including infants and children.

1. *Plant/animal metabolism and magnitude of the residue tolerance assessment.* The nature (metabolism) of bromoxynil in plants and animals is adequately understood for the purposes of these tolerances. There are no Codex, Canadian, or Mexican maximum residue levels established for residues of bromoxynil on cotton. In all the plant and animal (poultry and ruminants) metabolism studies submitted, the residue of concern were parent bromoxynil and the metabolite DBHA. The tolerances for cotton commodities are expressed in terms of bromoxynil and DBHA. Tolerances for meat and milk commodities, however, are expressed only in terms of bromoxynil because no satisfactory enforcement method has been validated for DBHA in such commodities. Transfer of DBHA residues to tissues in animals is likely to be equal to or less than that for parent bromoxynil. Based on this determination, coupled with worst-case assumptions concerning the amount of bromoxynil and DBHA present in animal feed, the Agency can make reasonable estimates of maximum DBHA concentrations in animal commodities based on measured parent bromoxynil residues. Therefore, the Agency has determined that expressing tolerances for bromoxynil in terms of the parent only can serve as an adequate indicator of the total amount of residue (bromoxynil parent and DBHA combined) that is present.

Although the maximum application rate for this use is 1.5 lb active ingredient/acre (ai/acre), field trial residue data are currently available only for a 4.5 lb ai/acre application rate. After conducting these studies, the petitioner proposed lowering the maximum application rate from 4.5 lb ai/acre to 1.5 lb ai/acre. These tolerances were determined based on extrapolation of data from studies conducted using the 4.5 lb ai/acre application rate. The Agency does not believe that there will necessarily be a linear relationship between maximum residues and the application rate due to the variability in residue levels in individual commodities. However, at the 1.5 lb ai/acre rate, lower maximum residues would be expected compared to those observed in the studies conducted at 4.5 lb ai/acre. The Agency has determined the required tolerances for this use based on the variability observed in the available residue data for cotton and the reduction in the application rate. EPA is proposing to include a tolerance for cotton gin byproducts, although this was not done previously, because EPA procedures have been revised since the previous tolerance was set to include cotton gin byproducts in the dietary assessment for livestock. In addition, a separate tolerance is being set for cottonseed hulls because data show that bromoxynil and DBHA residues concentrate in cottonseed hulls. Further, because of the inclusion of cotton gin trash in the livestock dietary assessment, revised tolerances are needed for milk and meat of cattle, hogs, horses, goats and sheep. Inclusion of the metabolite DBHA in the livestock dietary assessment also resulted in the need to establish tolerances for bromoxynil residues in poultry. Required tolerances for residues of bromoxynil and DBHA in cotton commodities are 7 ppm in cottonseed, 50 ppm in cotton gin by-products, and 21 ppm in cottonseed hulls. Required tolerances for residues of bromoxynil in cattle, hogs, horses, goats, and sheep are 0.5 ppm in meat, 3.0 ppm in meat byproducts, and 1.0 ppm in fat. Required tolerances for residues of bromoxynil in milk are 0.1 ppm. Required tolerances for residues of bromoxynil in poultry are 0.05 ppm in meat, meat-byproducts, fat, and eggs.

2. *Plant/animal metabolism and magnitude of the residue determination of anticipated residues.* Anticipated residues used for risk assessment determination were calculated based on a maximum application rate of 1.5 lb ai/acre and treatment of 3 percent of cotton in the U.S. with bromoxynil, and estimated bromoxynil-treated percentages of other crops. Percent of crop treated estimates are derived from federal and private market survey data. Typically, a range of estimates are supplied and the upper end of this range is assumed for the exposure assessment. By using the upper end estimate of percent of crop treated, the Agency is reasonably certain that exposure is not understated for any significant subpopulation group. For cotton, the percent of the crop that can be treated will be capped at 3 percent by the bromoxynils registration. Further, regional consumption information is taken into account through EPA's computer-based model for evaluating the exposure of significant subpopulations, including several regional groups, to pesticide residues. As a result of this use, the maximum combined residues of parent bromoxynil and DBHA are not expected to exceed 0.38 ppm in cottonseed meal and 1.26 ppm in cottonseed oil. Based on the bromoxynil ruminant feeding study, the maximum residues possible in animal commodities are 0.53 ppm in meat, 2.96 ppm in meat byproducts, 1.08 ppm in fat, and 0.059 ppm in milk. Based on the bromoxynil poultry feeding study, the maximum residues possible in poultry commodities are 0.064 ppm in meat, 0.47 ppm in meat by-products, 0.10 ppm in fat, and 0.0313 ppm in eggs. Based on the bromoxynil ruminant feeding study, the anticipated residues in animal commodities are 0.0025 ppm in meat, 0.014 ppm in meat by-products, 0.005 ppm in fat, and 0.00044 ppm in milk. Based on the bromoxynil poultry feeding study, the anticipated residues in poultry commodities are 0.00015 ppm in meat, 0.00116 ppm in meat by-products, 0.00025 ppm in fat, and 0.00008 ppm in eggs.

3. *Drinking water.* Available data indicate that bromoxynil is not a groundwater contaminant because it does not exhibit the mobility or persistence characteristics of pesticides that are normally found in ground water. Although bromoxynil octanoate

has been found to be mobile under certain conditions (sand, sandy loam, and loam soils), it dissipates in the environment by abiotic hydrolysis, photodegradation and microbially-mediated metabolism. Also, although bromoxynil has the potential to leach to ground water under certain conditions, its rapid aerobic and anaerobic degradation reduces the likelihood of ground water contamination. As a worst-case screen, modeled chronic and acute estimates for bromoxynil in runoff water have been used to assess possible exposure via drinking water. The EPA drinking water risk estimates are based on an exposure modeling procedure called GENEEC (GENeric Expected Environmental Concentration), routinely used to estimate residue surface water runoff (for ecological risk assessment) but a new tool for human exposure and risk assessment. GENEEC estimates concentrations based on a few basic chemical parameters and pesticide label application information. GENEEC is a model which uses a chemical's soil/water partition coefficient and degradation half-life values to estimate runoff from a 10 hectare agricultural field into a 1 hectare by 2 meter deep pond. GENEEC considers reduction in dissolved pesticide concentration due to adsorption of pesticide to soil or sediment, incorporation, degradation in soil before wash off to a water body, direct deposition of spray drift into the water body, and degradation of the pesticide within the water body. It does not consider the potential reduction or removal of the pesticide and/or its degradates by a drinking water treatment system. Again, GENEEC should be considered a screen since it can substantially over-estimate the actual drinking water concentrations. Based on the model, EPA estimated the high-end level of exposure in surface water to be 7.2 ppb, and the average level to 0.3 ppb. For analysis of acute risk, EPA used high end consumption estimates from the publication Total Water and Tapwater Intake in the United States Population-Based Estimates of Quantities and Sources of 40.5 g/kg/day for the entire U.S. population, 126.5 g/kg/day for nonnursing infants, 39.6 g/kg/day for pregnant women (>13 years old), and 53.3 g/kg/day for the southern U.S. For analysis of chronic risk, EPA used an average consumption estimate from this publication of 20.9 g/kg/day for the southern U.S. The estimate for water consumption in the southern U.S. was used for the chronic risk assessment because this value is slightly higher than that for the entire U.S. population, and, therefore, calculation based on consumption in the southern U.S. adequately accounts for risk in the south as well as the overall U.S. population.

3. *Cumulative exposure to substances with common mechanism of toxicity.* Section 408(b)(2)(D)(v) requires that, when considering whether to establish, modify, or revoke a tolerance, the Agency consider ''available information'' concerning the cumulative effects of a particular pesticide's residues and ''other substances that have a common mechanism of toxicity.'' The Agency believes that ''available information'' in this context might include not only toxicity, chemistry, and exposure data, but also scientific policies and methodologies for understanding common mechanisms of toxicity and conducting cumulative risk assessments. For most pesticides, although the Agency has some information in its files that may be helpful in determining whether a pesticide shares a common mechanism of toxicity with any other substances, EPA does not at this time have the methodology to resolve the scientific issues concerning common mechanism of toxicity in a meaningful way. EPA has begun a pilot process to study this issue further through examination of particular classes of pesticides. The Agency hopes that the results of this pilot process will increase the Agency's scientific understanding of this question such that EPA will be able to develop and apply scientific principles for better determining which chemicals have a common mechanism of toxicity and evaluating the cumulative effects of such chemicals. The Agency anticipates, however, that even as its understanding of the science of common mechanisms increases, decisions on specific classes of chemicals will be heavily dependent on chemical specific data, much of which may not be presently available.

Although, at present, the Agency does not know how to apply the information in its files concerning common mechanism issues to most risk assessments, there are pesticides as to which the common mechanisms issues can be resolved. These pesticides include pesticides that are toxicologically dissimilar to existing chemical substances (in which the Agency can conclude that it is unlikely that a pesticide shares a common mechanism of activity with other substances) and pesticides that produce a common toxic metabolite (in which case common mechanism of activity will be assumed).

EPA does not have, at this time, available data to determine whether bromoxynil has a common mechanism of toxicity with other substances or how to include this pesticide in a cumulative risk assessment. Unlike other pesticides for which EPA has followed a cumulative risk approach, bromoxynil does not appear to produce a toxic metabolite produced by other substances. For the purposes of this tolerance action, therefore, EPA has not assumed that bromoxynil has a common mechanism of toxicity with other substances. After EPA develops methodologies for more fully applying common mechanism of toxicity issues to risk assessments, the Agency will develop a process (either as part of the periodic review of pesticides or otherwise) to reexamine those tolerance decisions made earlier.

The registrant must submit, upon EPA's request and according to a schedule determined by the Agency, such information as the Agency directs to be submitted in order to evaluate issues related to whether bromoxynil shares a common mechanism of toxicity with any other substance and, if so, whether any tolerance for bromoxynil needs to be modified or revoked.

## VI. Determination of Safety

### *A. General*

1. *Acute dietary.* As part of the hazard assessment process, the Agency reviews the available toxicology data base to determine the endpoints of concern. For acute dietary risk, the Agency has determined Margin of Exposure (MOE) by dividing the NOEL from the relevant toxicological study by the expected consumption during one day (MOE = NOEL/exposure). An estimated MOE of 100 will be considered to be adequately protective for bromoxynil. To estimate acute dietary risk for developmental effects from food sources, an MOE of 400 was calculated using 1-day dietary exposure estimates for U.S women (age 13+ years) and the NOEL of 4 mg/kg/day derived from an oral developmental toxicity study in rats. To estimate acute dietary risk for developmental effects from water sources, an MOE of >10,000 was calculated using an estimate of 7.2 parts per billion (ppb) water contamination and the endpoint (NOEL) of 4 mg/kg/day. An increased incidence of supernumerary ribs was observed at the LEL in the oral developmental toxicity study in rats and in several other developmental toxicity studies. To estimate acute dietary risk for systemic effects, other than developmental from food sources, an MOE of 270 was calculated using 1-day dietary exposure for infants (the most highly exposed population group) and a NOEL of 8 mg/kg/day derived from a 13-week oral

toxicity study in dogs. To estimate acute dietary risk for systemic effects, other than developmental from water sources, an MOE of >8,000 was calculated using an estimate of 7.2 ppb water contamination and a NOEL of 8 mg/kg/day. In the oral toxicity study in dogs, an increased incidence of panting, suggestive of a compensatory reaction to elevated body temperatures, was observed on day 1.

An assessment of aggregate (food/water) acute exposure has been made on the assumption of a constant background contamination level in water and an acute (one day) exposure from food sources. The relatively low level of contamination assumed for water does not significantly increase the upper-bound exposure estimate from foods of 0.01 mg/kg/day (MOE = 400 for U.S. women).

2. *Chronic dietary*. Based on the exposure assessment above, the general U.S. population and all population sub-groups are estimated to be exposed at a level less than 1 percent of the bromoxynil RfD of 0.015 mg/kg/day. For food sources, the lifetime upperbound carcinogenic risk estimate including cotton is $1.5 \times 10^{-6}$ for the U.S. population including infants and children. For water sources, carcinogenic risk, based on the estimated chronic level of 0.3 ppb and estimated drinking water consumption (20.9 g/kg/day for the southern U.S.) is at most $6.3 \times 10^{-7}$ for the southern U.S., and is probably much lower.

EPA believes that a risk estimate of this level generally represents a negligible risk, as EPA has traditionally applied that concept. EPA has commonly referred to a negligible risk as one that is at or below 1 in 1 million ($1 \times 10^{-6}$). Quantitative cancer risk assessment is not a precise science. There are a significant number of uncertainties in both the toxicology used to derive the cancer potency of a substance and in the data used to measure and calculate exposure. Thus, EPA generally does not attach great significance to numerical estimates that differ by approximately a factor of 2. Additionally, there are several other factors here which support a negligible risk finding. The component of this risk from bromoxynil residues in water ($6.3 \times 10^{-7}$) is significantly overstated. The level of bromoxynil residues in water was estimated by a model that does not take into account either the reduction that could be expected from treatment of the water or that residues would be reduced because bromoxynil use is permitted only on certain crops and only some fraction of those crops would be treated. This latter factor alone can be quite significant. For example, for cotton, treatment is limited to 3 percent of the crop. Further, EPA is in the process of reevaluating all of the bromoxynil uses this year as a part of FIFRA reregistration. This will permit EPA to better evaluate the total bromoxynil cancer risk and take steps to reduce any cancer risks of concern. For all of these reasons, EPA considers the carcinogenic risk from bromoxynil to be negligible within the meaning of that standard as it has been traditionally applied by EPA.

Accordingly, EPA concludes that there is a reasonable certainty that no harm will result to the general population and major identifiable population subgroups from aggregate exposure to bromoxynil. Specific risks to infants and children other than cancer are discussed below.

### *B. Determination of Safety for Infants and Children*

In assessing the potential for additional sensitivity of infants and children to residues of bromoxynil, EPA considered data from several developmental toxicity studies and reproduction studies. The developmental toxicity studies are designed to evaluate adverse effects on the developing organism resulting from pesticide exposure during prenatal development. Reproduction studies provide information relating to effects from exposure to the pesticide on the reproductive capability of mating animals and data on systemic toxicity.

FFDCA section 408 provides that EPA shall apply an additional 10–fold margin of safety for infants and children in the case of threshold effects to account for pre-and post-natal toxicity and the completeness of the data base unless EPA determines that a different margin of safety will be safe for infants and children. Margins of safety are incorporated into EPA risk assessments either directly through use of a margin of exposure analysis or through using uncertainty (safety) factors in calculating a dose level that poses no appreciable risk to humans. In either case, EPA generally defines the level of appreciable risk as exposure that is greater than 1/100 of the NOEL in the animal study appropriate to the particular risk assessment. This 100-fold uncertainty (safety) factor/margin of exposure (safety) is designed to account for combined inter- and intra-species variability. EPA believes that reliable data support using the standard 100-fold margin/factor and not the additional 10–fold margin/factor when EPA has a complete data base under existing guidelines and when the severity of the effect in infants or children or the potency or unusual toxic properties of a compound do not raise concerns regarding the adequacy of the standard margin/factor.

The data base for developmental and reproductive toxicity of bromoxynil is considered to be complete at this time. Based on this database, EPA has concluded that, although developmental toxicity was observed in the absence of maternal toxicity, the results of these data did not raise concerns regarding the adequacy of the standard margin of exposure. Central to this conclusion were the findings that: (1) Developmental toxicity was well-characterized in multiple species, providing a reliable NOEL, and further studies would not be expected to provide new information that would change the developmental endpoints on which bromoxynil is regulated; and (2) the observed developmental effect (supernumerary ribs) raised no unusual or special concern for developmental toxicity.

Accordingly, EPA concludes that reliable data support reliance upon the standard 100-fold margin of exposure/safety factor in assessing the risk to children. As detailed above, both chronic and acute assessments show no appreciable threshold risks to children and the non-threshold cancer risk is no greater than negligible. Thus, EPA concludes that there is a reasonable certainty that no harm will result to infants and children from aggregate exposure to bromoxynil.

## VII. Other Considerations

1. *Residue analytical methods*. Analytical methodology suitable for the enforcement of bromoxynil tolerances in plant and animal commodities is available. The analytical method for bromoxynil per se is published as Method I in *Pesticide Analytical Manual Vol. II*. Method RES9603 has been proposed for determination of DBHA in cotton RACs. This analytical method for determination of DBHA in plants has been validated by an independent laboratory. The Agency is currently carrying out confirmatory validation of this method.

2. *Endocrine effects*. Existing data do not support a conclusion that bromoxynil causes endocrine effects. Other than equivocal effects in the prostate gland of dogs at the highest dose tested in a chronic oral study and in the prostate gland of rats at the highest dose tested in a dermal reproduction study, no evidence of endocrine effects were reported in any other subchronic or chronic toxicology

studies on bromoxynil phenol or bromoxynil octanoate.

3. *Data gaps*. The following data gaps remain for use of bromoxynil on BXN cotton: (1) DBHA storage stability data, (2) successful petition method validation (i.e., method validation by Agency analytical chemists) of the enforcement method for DBHA in plants, (3) multi-residue method testing for DBHA, (4) limited field trials for rotational crops, (5) a poultry feeding study using DBHA, and (6) crop field trials, conducted at the 1.5 lb ai/acre application rate, in which the magnitude of residues is measured in cotton commodities.

## VIII. Public Comment

Under FFDCA 408(e)(2), EPA must provide for a public comment period before issuing a final tolerance or tolerance exemption under 408(e)(1). The public comment period is to be for 60 days unless EPA for good cause finds that it is in the public interest to reduce that comment period. The Agency has determined that there is good cause to reduce the comment period for these tolerances. First, the public has already had an opportunity to comment on the question of approval under the FFDCA of the use of bromoxynil on cotton. The Rhone Poulenc petition to establish a tolerance to cover bromoxynil residues on cottonseed resulting from application of bromoxynil to cotton squarely presented this issue. Second, the additional comment period is being provided to address a fairly narrow issue: what should the tolerance levels be for bromoxynil on livestock commodities (meat, milk, and eggs) due to residues of bromoxynil in cotton livestock feed commodities and what should the tolerance level be on two additional cotton livestock feed commodities (cotton gin byproducts and cottonseed hulls). All of these tolerance levels are necessary because of the use of bromoxynil on cotton, the subject of the Rhone Poulenc petition. Third, an extended comment period in this case will essentially mean that bromoxynil will not be available to growers in the 1997 growing season. The time for application of this herbicide is between roughly the end of April and the end of June. Growers who have paid a premium for bromoxynil-resistant seed may suffer consider financial loss if bromoxynil is not available. EPA would like to be in a position to make a final decision prior to the end of that period. Therefore, the Agency is allowing a 15–day instead of a 60–day public comment period for these proposed tolerances.

Interested persons are invited to submit written comments on this proposed regulation. Comments must bear a notation indicating the docket control number ''OPP–300486.''

## IX. Public Docket

The official record for this proposed rule, as well as the public version, has been established for this proposal under docket control number ''OPP–300486'' (including comments and data submitted electronically as described below). A public version of this record, including printed, paper versions of electronic comments, which does not include any information claimed as CBI, is available for inspection from 8:30 a.m. to 4 p.m., Monday through Friday, excluding legal holidays. The official record is located at the address in ''ADDRESSES'' at the beginning of this document.

Electronic comments can be sent directly to EPA at:

opp-docket@epamail.epa.gov

Electronic comments must be submitted as an ASCII file avoiding the use of special characters and any form of encryption. Comment and data will also be accepted on disks in Wordperfect 5.1 file format or ASCII file format. All comments and data in electronic form must be identified by the docket control number OPP–300486. Electronic comments on this proposed rule may be filed online at many Federal Depository Libraries.

## X. Regulatory Assessment Requirements

Under Executive Order 12866 (58 FR 51735, October 4, 1993), this action is not a ''significant regulatory action '' and since this action does not impose any information collection requirements subject to approval under the Paperwork Reduction Act, 44 U.S.C. 3501 *et seq.*, it is not subject to review by the Office of Management and Budget. In addition, this action does not impose any enforceable duty, or contain any ''unfunded mandates'' as described in Title II of the Unfunded Mandates Reform Act of 1995 Pub. L. 104-4), or require prior consultation as specified by Executive Order 12875 (58 FR 58093, October 28, 1993), or special considerations as required by Executive Order 12898 (59 FR 7629, February 16, 1994).

Pursuant to the requirements of the Regulatory Flexibility Act (Pub. L. 96-354, 94 Stat. 1164, 5 U.S.C. 601-612), the Administrator has determined that regulations establishing new tolerances or raising tolerance levels or establishing exemptions from tolerance requirements do not have a significant economic impact on a substantial number of small entities. A certification statement explaining the factual basis for this determination was published in the **Federal Register** of May 4, 1981 (46 FR 24950).

## List of Subjects in 40 CFR Part 180

Environmental protection, Administrative practice and procedure, Agricultural commodities, Food additive, Pesticides and pests, Reporting and recordkeeping requirements.

Dated: April 28, 1997.

**Jim Jones,**

*Acting Director, Registration Division, Office of Pesticide Programs.*

Therefore, it is proposed that 40 CFR part 180 be amended as follows:

1. The authority citation for part 180 continues to read as follows:

Authority: 21 U.S.C. 346a. and 371.

2. Section 180.324 is revised to read as follows:

### § 180.324 Bromoxynil; tolerances for residues.

(a) *General*. (1) Tolerances are established for residues of the herbicide bromoxynil (3,5-dibromo-4-hydroxybenzonitrile) resulting from application of its octanoic and/or heptanoic acid ester in or on the following commodities:

| Commodity | Parts per million |
|---|---|
| Alfalfa, seeding | 0.1 ppm |
| Barley, forage, green | 0.1 ppm |
| Barley, grain | 0.1 ppm |
| Barley, straw | 0.1 ppm |
| Cattle, meat | 0.5 ppm |
| Cattle, meat by-products | 3 ppm |
| Cattle, fat | 1 ppm |
| Corn, fodder (dry) | 0.1 ppm |
| Corn, fodder (green) | 0.1 ppm |
| Corn, grain | 0.1 ppm |
| Corn, fodder, field (dry) | 0.1 ppm |
| Corn, fodder, field (green) | 0.1 ppm |
| Corn, grain, field | 0.1 ppm |
| Eggs | 0.05 ppm |
| Flaxseed | 0.1 ppm |
| Flax straw | 0.1 ppm |
| Garlic | 0.1 ppm |
| Goats, meat | 0.5 ppm |
| Goats, meat by-products | 3 ppm |
| Goats, fat | 1 ppm |
| Grass, canary, annual, seed | 0.1 ppm |
| Grass, canary, annual, straw | 0.1 ppm |
| Hogs, meat | 0.5 ppm |
| Hogs, meat by-products | 3 ppm |
| Hogs, fat | 1 ppm |
| Horses, meat | 0.5 ppm |
| Horses, meat by-products | 3 ppm |
| Horses, fat | 1 ppm |
| Milk | 0.1 ppm |
| Mint hay | 0.1 ppm |
| Oats, forage, green | 0.1 ppm |
| Oats, grain | 0.1 ppm |

| Commodity | Parts per million |
|---|---|
| Oats, straw | 0.1 ppm |
| Onions (dry bulb) | 0.1 ppm |
| Poultry, meat | 0.05 ppm |
| Poultry, meat by-products | 0.05 ppm |
| Poultry, fat | 0.05 ppm |
| Rye, forage, green | 0.1 ppm |
| Rye, grain | 0.1 ppm |
| Rye, straw | 0.1 ppm |
| Sheep, meat | 0.5 ppm |
| Sheep, meat by-products | 3 ppm |
| Sheep, fat | 1 ppm |
| Sorghum, fodder | 0.1 ppm |
| Sorghum, forage | 0.1 ppm |
| Sorghum, grain | 0.1 ppm |
| Wheat, forage, green | 0.1 ppm |
| Wheat, grain | 0.1 ppm |
| Wheat, straw | 0.1 ppm |

(2) Tolerances are established for residues of the herbicide bromoxynil (3,5-dibromo-4-hydroxybenzonitrile) and its metabolite 3,5-dibromo-4-hydroxybenzoic acid resulting from application of its octanoic and/or heptanoic acid ester in or on the following commodities:

| Commodity | Parts per million | Expiration/ Revocation Date |
|---|---|---|
| Cotton, undelinted seed | 7 ppm | 1/1/1998 |
| Cotton, hulls | 21 ppm | 1/1/1998 |
| Cotton gin byproducts | 50 ppm | 1/1/1998 |

(b) *Section 18 emergency exemptions*. [Reserved]

(c) *Tolerances with regional registrations*. [Reserved]

(d) *Indirect or inadvertent residues*. [Reserved]

[FR Doc. 97–11504 Filed 5–01–97; 8:45 am]

BILLING CODE 6560–50–F

## FEDERAL COMMUNICATIONS COMMISSION

### 47 CFR Part 25

**[IB Docket No. 95–91; GEN Docket No. 90–357; DA 97–908]**

### Satellite Digital Audio Radio Service

**AGENCY:** Federal Communications Commission.

**ACTION:** Proposed rule; extension to file comments.

**SUMMARY:** The Commission has adopted an *Order* granting an extension of time in which to file comments in the Commission's Further Notice of Proposed Rulemaking in IB Docket No. 95–91. On April 30, 1997, the National Association of Broadcasters requested a thirty-day extension of time to file comments in the FNPRM. In the *Order,* we grant NAB's request and extend the comment and reply dates to June 13 and June 27, 1997, respectively.

**DATES:** Comments are due on or before June 13, 1997. Reply comments are due on or before June 27, 1997.

**ADDRESSES:** Office of the Secretary, Federal Communications Commission, 1919 M Street, N.W., Room 222, Washington, D.C. 20554.

**FOR FURTHER INFORMATION CONTACT:** Rosalee Chiara at (202) 418–0754 or Ron Repasi at (202) 418–0768 with the International Bureau.

**SUPPLEMENTARY INFORMATION:**

1. The National Association of Broadcasters (NAB) has requested an extension of time for filing comments in response to the Further Notice of Proposed Rulemaking in the above captioned docket regarding the use of terrestrial repeaters in the satellite Digital Audio Radio Service (DARS).[1] Comments were originally due on May 2, 1997. We grant NAB's request.

2. In support of its request for additional time, NAB states that the two DARS applicants who won licensees in the April auction are required to submit amended technical proposals on or before May 16. NAB asserts that it is impossible to comment on the issue of terrestrial repeaters until this amended technical information is available. NAB also states that because the applicant's original applications were filed in 1992, up-to-date technical proposals are necessary to prepare comments.

3. We find that an extension is warranted in this instance. Accordingly, pursuant to Section 0.261 of the Commission's rules on delegation of authority, 47 CFR § 0.261, IT IS ORDERED, that the time for filing comments with respect to the Further Notice of Proposed Rulemaking in this proceeding is extended to June 13, 1997. Reply comments are due on or before June 27, 1997.

Federal Communications Commission.

**Cassandra Thomas,**

*Deputy Chief, Satellite and Radiocommunication Division, International Bureau.*

[FR Doc. 97–11678 Filed 5–1–97; 8:45 am]

BILLING CODE 6712–01–P

[1] Establishment of Rules and Policies for the Digital Audio Radio Satellite Service in the 2310–2360 MHz Frequency Band, IB Docket No. 95–91, 62 FR 19095 (April 18, 1997), FCC 97–70 (released March 3, 1997) at ¶¶138–142.

## DEPARTMENT OF COMMERCE

### National Oceanic and Atmospheric Administration

### 50 CFR Part 648

**[I.D. 042497A]**

### New England Fishery Management Council; Meeting

**AGENCY:** National Marine Fisheries Service (NMFS), National Oceanic and Atmospheric Administration (NOAA), Commerce.

**ACTION:** Public meeting.

**SUMMARY:** The New England Fishery Management Council (Council) will hold a special public meeting to consider actions affecting New England fisheries in the exclusive economic zone.

**DATES:** The meeting will be held on Tuesday, May 6, 1997, at 9:30 a.m.

**ADDRESSES:** The meeting will take place at the Holiday Inn, 1 Newbury Street (Route 1), Peabody, MA; telephone (508) 535-4600. Requests for special accommodations should be addressed to the New England Fishery Management Council, 5 Broadway, Saugus, MA 01906-1036; telephone (617) 231-0422.

**FOR FURTHER INFORMATION CONTACT:** Paul J. Howard, Executive Director, New England Fishery Management Council, (617) 231-0422.

**SUPPLEMENTARY INFORMATION:** On May 6, 1997, the Council will convene a special meeting specifically to develop comments on the Large Whale Take Reduction Plan regulations recently proposed by NMFS. Prior to this agenda item, the Council intends to initiate action on Framework Adjustment 24 to the Northeast Multispecies Fishery Management Plan under the framework for abbreviated rulemaking procedure contained in 50 CFR 648.90. The action would exempt gillnet vessels in the trip boat category from the requirement to bring their monkfish gillnets to port when fishing under a days-at-sea allocation.

### Special Accommodations

This meeting is physically accessible to people with disabilities. Requests for sign language interpretation or other auxiliary aids should be directed to Paul J. Howard (see **ADDRESSES**) at least 5 days prior to the meeting date.

**Authority:** 16 U.S.C. 1801 *et seq.*

Dated: April 29, 1997.

**Gary C. Matlock,**

*Director, Office of Sustainable Fisheries, National Marine Fisheries Service.*

[FR Doc. 97–11470 Filed 5–1–97; 8:45 am]

BILLING CODE 3510–22–F

# Notices

Federal Register
Vol. 62, No. 85
Friday, May 2, 1997

This section of the FEDERAL REGISTER contains documents other than rules or proposed rules that are applicable to the public. Notices of hearings and investigations, committee meetings, agency decisions and rulings, delegations of authority, filing of petitions and applications and agency statements of organization and functions are examples of documents appearing in this section.

## DEPARTMENT OF AGRICULTURE

### Submission for OMB Review; Comment Request

April 25, 1997.

The Department of Agriculture has submitted the following information collection requirement(s) to OMB for review and clearance under the Paperwork Reduction Act of 1995, Public Law 104–13. Comments regarding (a) whether the collection of information is necessary for the proper performance of the functions of the agency, including whether the information will have practical utility; (b) the accuracy of the agency's estimate of burden including the validity of the methodology and assumptions used; (c) ways to enhance the quality, utility and clarity of the information to be collected; (d) ways to minimize the burden of the collection of information on those who are to respond, including through the use of appropriate automated, electronic, mechanical, or other technological collection techniques or other forms of information technology should be addressed to: Desk Officer for Agriculture, Office of Information and Regulatory Affairs, Office of Management and Budget (OMB), Washington, D.C. 20503 *and* to Department Clearance Office, USDA, OCIO, Mail Stop 7602, Washington, D.C. 20250–7602. Comments regarding these information collections are best assured of having their full effect if received within 30 days of this notification.Copies of the submission(s) may be obtained by calling (202) 720–6204 or (202) 720–6746.

An agency may not conduct or sponsor a collection of information unless the collection of information displays a currently valid OMB control number and the agency informs potential persons who are to respond to the collection of information that such persons are not required to respond to the collection of information unless it displays a currently valid OMB control number.

### Farm Service Agency

*Title:* CCC Conservation Contract—Addendum.

*OMB Control Number:* 0560–0174.

*Summary:* Information collected allows a respondent to apply for conservation benefits, submit performance data for payment and record conservation decisions.

*Need and Use of the Information:* The information is used to carry out the conservation program including designation of priority areas for funding.

*Description of Respondents:* Not-for-profit institutions; Individuals or households; Farms; State, Local or Tribal Government.

*Number of Respondents:* 27,575.

*Frequency of Responses:* Reporting: One time only.

*Total Burden Hours:* 684,200.

EMERGENCY PROCESSING OF THIS SUBMISSION HAS BEEN REQUESTED BY May 16, 1997.

**Donald Hulcher,**

*Departmental Clearance Officer.*

[FR Doc. 97–11414 Filed 5–1–97; 8:45 am]

BILLING CODE 3410–01–M

## DEPARTMENT OF AGRICULTURE

### Commodity Credit Corporation

### Farm Service Agency

### Notice of Request for Extension and Revision of a Currently Approved Information Collection

**AGENCY:** Commodity Credit Corporation and Farm Service Agency, USDA.

**ACTION:** Notice and request for comments.

**SUMMARY:** In accordance with the Paperwork Reduction Act of 1995, this notice announces the intention of the Commodity Credit Corporation (CCC) and the Farm Service Agency (FSA) to request extension of a currently approved information collection that requests a payee's identifying number used by CCC and FSA to issue payments or other disbursements. The programs under which payments are made are authorized by the Agricultural Act of 1970, the Commodity Credit Corporation Charter Act, the Food Security Act of 1985, and the Federal Agriculture Improvement and Reform Act of 1996 (1996 Act).

**DATES:** Comments on this notice must be received on or before July 1, 1997 to be assured consideration.

**ADDITIONAL INFORMATION OR COMMENTS:** Contact Darin Coté, Agricultural Program Specialist, Compliance and Production Adjustment Division, USDA, FSA, STOP 0517, 1400 Independence Ave, S.W., Washington, D.C. 20250–2415, (202) 720–8129.

**SUPPLEMENTARY INFORMATION:**

*Title:* Payer's Request for Identifying Number.

*OMB Number:* 0560–0121.

*Expiration Date:* June 30, 1997.

*Type of Request:* Extension and revision of a currently approved information collection.

*Abstract:* In order to provide the Internal Revenue Service with proper identification for the processing of tax returns, all producers who receive CCC and FSA program payments must provide FSA with a social security, employer, or IRS identifying number. Form CCC–343, Payer's Request for Identifying Number, will collect this information without regard to whether the payee is required to file a tax return or is covered by social security.

The county FSA office prepares a CCC–343 for each producer who has not furnished a producer ID number. Once the ID number is obtained and provided to the county FSA office, the producer is not requested to provide this information again. FSA does not make any program payment until a producer furnishes a social security, employer, or IRS identifying number.

The Agency cost estimates are $6,210 for data collection. Identification of producers allows FSA to provide IRS with identifying numbers for tax collection purposes. Section 6676 of the Internal Revenue Code provides a penalty for failure to furnish an identifying number to a payer required to report such number to the Service.

*Estimate of Burden:* Public reporting burden for this collection of information is estimated to average .08 hours (5 minutes) per response.

*Respondents:* Individual producers.

*Estimated Number of Respondents:* 3,000.

*Estimated Number of Responses per Respondent:* 1.

*Estimated Total Annual Burden on Respondents:* 250 hours.

*Proposed topics for comment include:* (a) whether the collection of information is necessary for the proper performance of the functions of the agency, including whether the information will have practical utility; (b) the accuracy of the agency's estimate of burden including the validity of the methodology and assumptions used; (c) ways to enhance the quality, utility and clarity of the information collected; or (d) ways to minimize the burden of the collection of the information on those who are to respond, including through the use of appropriate automated, electronic, mechanical, or other technological collection techniques or other forms of information technology. Comments should be sent to the Desk Officer for Agriculture, Office of Information and Regulatory Affairs, Office of Management and Budget, Washington, D.C. 20503 and to Darin Coté, Agricultural Program Specialist, Compliance and Production Adjustment Division, USDA, FSA, STOP 0517, 1400 Independence Ave., S.W., Washington, D.C. 20250–2415, (202)720–8129.

Copies of information collection may be obtained from Darin Coté, at the above address.

OMB is required to make a decision concerning the collections(s) of information contained in these proposed regulations between 30 and 60 days after publication of this document in the **Federal Register**. Therefore, a comment to OMB is best assured of having its full effect if OMB receives it within 30 days of publication. This does not affect the deadline for the public to comment to the Department of Agriculture on any substantive common provisions regulations that may be the subject of other notices.

Signed at Washington, DC, on April 25, 1997.

**Bruce R. Weber,**

*Executive Vice President, Commodity Credit Corporation, Administrator, Farm Service Agency.*

[FR Doc. 97–11413 Filed 5–1–97; 8:45 am]

BILLING CODE 3410–05–P

## COMMITTEE FOR PURCHASE FROM PEOPLE WHO ARE BLIND OR SEVERELY DISABLED

### Procurement List; Additions

**AGENCY:** Committee for Purchase From People Who Are Blind or Severely Disabled.

**ACTION:** Additions to the Procurement List.

**SUMMARY:** This action adds to the Procurement List services to be furnished by nonprofit agencies employing persons who are blind or have other severe disabilities.

**EFFECTIVE DATE:** June 2, 1997.

**ADDRESSES:** Committee for Purchase From People Who Are Blind or Severely Disabled, Crystal Square 3, Suite 403, 1735 Jefferson Davis Highway, Arlington, Virginia 22202–3461.

**FOR FURTHER INFORMATION CONTACT:** Beverly Milkman (703) 603–7740.

**SUPPLEMENTARY INFORMATION:** On October 4 and December 20, 1996, the Committee for Purchase From People Who Are Blind or Severely Disabled published notices (61 FR 51881 and 67306) of proposed additions to the Procurement List.

After consideration of the material presented to it concerning capability of qualified nonprofit agencies to provide the services and impact of the additions on the current or most recent contractors, the Committee has determined that the services listed below are suitable for procurement by the Federal Government under 41 U.S.C. 46–48c and 41 CFR 51–2.4.

I certify that the following action will not have a significant impact on a substantial number of small entities. The major factors considered for this certification were:

1. The action will not result in any additional reporting, recordkeeping or other compliance requirements for small entities other than the small organizations that will furnish the commodity and service to the Government.

2. The action will not have a severe economic impact on current contractors for the commodity and service.

3. The action will result in authorizing small entities to furnish the commodity and service to the Government.

4. There are no known regulatory alternatives which would accomplish the objectives of the Javits-Wagner-O'Day Act (41 U.S.C. 46–48c) in connection with the commodity and service proposed for addition to the Procurement List.

Accordingly, the following commodity and service are hereby added to the Procurement List:

*Commodity*

EMM Tray, Plastic & EMM Sleeve, Fiberboard
7240–00–NSH–0001
7240–00–NSH–0002

(50% of the total Government requirements for the U.S. Postal Service)

*Service*

*Administrative Services*

General Services Administration, Las Vegas Field Office (sub Reno), Reno, Nevada

This action does not affect current contracts awarded prior to the effective date of this addition or options that may be exercised under those contracts.

**Beverly L. Milkman,**

*Executive Director.*

[FR Doc. 97–11477 Filed 5–1–97; 8:45 am]

BILLING CODE 6353–01–P

## COMMITTEE FOR PURCHASE FROM PEOPLE WHO ARE BLIND OR SEVERELY DISABLED

### Procurement List; Proposed Additions and Deletions

**AGENCY:** Committee for Purchase From People Who Are Blind or Severely Disabled.

**ACTION:** Proposed Additions to and Deletions from Procurement List.

**SUMMARY:** The Committee has received proposals to add to the Procurement List services to be furnished by nonprofit agencies employing persons who are blind or have other severe disabilities, and to delete commodities previously furnished by such agencies.

**COMMENTS MUST BE RECEIVED ON OR BEFORE:** June 2, 1997.

**ADDRESS:** Committee for Purchase From People Who Are Blind or Severely Disabled, Crystal Square 3, Suite 403, 1735 Jefferson Davis Highway, Arlington, Virginia 22202–3461.

**FOR FURTHER INFORMATION CONTACT:** Beverly Milkman (703) 603–7740.

**SUPPLEMENTARY INFORMATION:** This notice is published pursuant to 41 U.S.C. 47(a)(2) and 41 CFR 51–2.3. Its purpose is to provide interested persons an opportunity to submit comments on the possible impact of the proposed actions.

### Addition

If the Committee approves the proposed addition, all entities of the Federal Government (except as otherwise indicated) will be required to procure the services listed below from nonprofit agencies employing persons who are blind or have other severe disabilities.

I certify that the following action will not have a significant impact on a substantial number of small entities. The major factors considered for this certification were:

1. The action will not result in any additional reporting, recordkeeping or other compliance requirements for small

entities other than the small organizations that will furnish the services to the Government.

2. The action does not appear to have a severe economic impact on current contractors for the services.

3. The action will result in authorizing small entities to furnish the services to the Government.

4. There are no known regulatory alternatives which would accomplish the objectives of the Javits-Wagner-O'Day Act (41 U.S.C. 46–48c) in connection with the services proposed for addition to the Procurement List. Comments on this certification are invited. Commenters should identify the statement(s) underlying the certification on which they are providing additional information.

The following services have been proposed for addition to Procurement List for production by the nonprofit agencies listed:

*Grounds Maintenance*

Picatinny Arsenal, Picatinny, New Jersey
*NPA:* The First Occupational Center of New Jersey, Orange, New Jersey

*Janitorial/Custodial*

U.S. Courthouse, 1030 SW 3rd Avenue, Portland, Oregon
NPA: Portland Habilitation Center, Inc., Portland, Oregon

*Janitorial/Custodial*

U.S. Coast Guard, 2420 South Lincoln Memorial Parkway, Milwaukee, Wisconsin
NPA: GWS, Inc., Milwaukee, Wisconsin

*Publications Distribution*

Minot Air Force Base, North Dakota NPA: Minot Vocational Adjustment Workshop, Inc., Minot, North Dakota

### Deletions

I certify that the following action will not have a significant impact on a substantial number of small entities. The major factors considered for this certification were:

1. The action will not result in any additional reporting, recordkeeping or other compliance requirements for small entities.

2. The action does not appear to have a severe economic impact on future contractors for the commodities.

3. The action will result in authorizing small entities to furnish the commodities to the Government.

4. There are no known regulatory alternatives which would accomplish the objectives of the Javits-Wagner-O'Day Act (41 U.S.C. 46–48c) in connection with the commodities proposed for deletion from the Procurement List.

The following commodities have been proposed for deletion from the Procurement List:

*Surgical Pack, Disposable*

6532–01–018–3286

*Pillowcase, Disposable*

7210–00–852–3417
7210–00–883–8494

*Trousers, Night Camouflage, Desert*

8415–01–102–6285 through –6299

**Beverly L. Milkman,**
*Executive Director.*

[FR Doc. 97–11478 Filed 5–1–97; 8:45 am]

BILLING CODE 6353–01–P

## COMMISSION ON CIVIL RIGHTS

### Sunshine Act Meeting

**AGENCY:** U.S. Commission on Civil Rights.

**DATE AND TIME:** Friday, May 9, 1996, 9:30 a.m.

**PLACE:** U.S. Commission on Civil Rights, 624 Ninth Street, NW., Room 540, Washington, DC 20425.

**STATUS:**

### Agenda

I. Approval of Agenda
II. Approval of Minutes of April 4, 1997
III. Announcements
IV. Staff Report
V. Future Items
11:30 a.m. Briefing on the Legal Services Corporation

**CONTACT PERSON FOR FURTHER INFORMATION:** Barbara Brooks, Press and Communications (202) 376–8312.

**Stephanie Y. Moore,**
*General Counsel.*

[FR Doc. 97–11579 Filed 4–30–97; 10:32 am]

BILLING CODE 6335–01–M

## DEPARTMENT OF COMMERCE

### Bureau of the Census

**[Docket No. 970408082–7082–01]**

**RIN 0607–XX28**

### Block Group Program for Census 2000—Proposed Criteria

**AGENCY:** Bureau of the Census, Commerce.

**ACTION:** Notice of proposed program revisions and request for comments.

**SUMMARY:** Block groups are geographic statistical divisions of census tracts, each of which consists of from one to nine block groups. A block group comprises a reasonably compact and contiguous cluster of census blocks. The primary goal of the block group program is to provide data users with a geographic subunit of census tracts for which decennial census sample and 100 percent data are tabulated and disseminated.

The Census Bureau first used block groups in its data presentations from the 1970 census. It did this in lieu of providing data summaries for enumeration districts in areas that had census block numbers. As census blocks and block groups became increasingly popular with data users, the Census Bureau established them in many new areas. By 1990, there was complete census block and block group coverage for all of the United States, Puerto Rico, and the Island Areas (American Samoa, Guam, the Northern Mariana Islands, and the Virgin Islands of the United States).

Through the 1990 census, block groups were subunits either of census tracts or of similar entities known as block numbering areas (BNAs). For areas where census tracts did not exist, the Census Bureau had established BNAs to control the numbering of census blocks within block groups. A county or statistically equivalent entity [1] could, therefore, have either census tracts or BNAs. For Census 2000, the Census Bureau will merge the two programs and convert all BNAs to census tracts.

To determine boundaries and identification numbers for block groups, the Census Bureau offers a program to local participants, such as locally identified agencies and American Indian tribal officials, whereby they can review and update the boundaries of the block groups delineated for the 1990 census and suggest revisions according to the criteria developed and promulgated by the Census Bureau. The Census Bureau then reviews the resulting block groups for conformance to these criteria.

As the first step in this process, the Census Bureau is requesting comments on the criteria proposed for the delineation of block groups in conjunction with Census 2000. These criteria will apply to the 50 states, American Indian and Alaska Native areas, Puerto Rico, and the Island Areas. The Census Bureau may modify and, if

[1] Includes parishes in Louisiana; boroughs and census areas in Alaska; independent cities in Maryland, Missouri, Nevada, and Virginia; that portion of Yellowstone National Park in Montana; districts in American Samoa and the Virgin Islands of the United States; municipalities in the Northern Mariana Islands; municipios in Puerto Rico; and the entire areas constituting the District of Columbia and Guam. This notice will refer to all these entities collectively as ''counties.''

necessary, reject proposals for block groups that do not meet the criteria established following this notice.

Besides the proposed criteria, this notice includes a description of the changes from the criteria used for the 1990 census and a list of definitions of key terms used in the criteria.

**DATES:** Any suggestions or recommendations concerning the proposed criteria should be submitted in writing by June 2, 1997.

**ADDRESSES:** Director, Bureau of the Census, Washington, DC 20233–0001.

**FOR FURTHER INFORMATION CONTACT:** Dr. Joel Morrison, Chief, Geography Division, Bureau of the Census, Washington, DC 20233–7400, telephone (301) 457–1132, or e-mail (jmorrison@geo.census.gov).

**SUPPLEMENTARY INFORMATION:** The block group delineation criteria have evolved in response to decennial census practices and the preferences of program participants and data users. After each decennial census, the Census Bureau, in consultation with participants and data users, reviews and revises these criteria. Then, before the next decennial census, the Census Bureau offers state, tribal, and local officials an opportunity to correct, update, and otherwise improve the block group delineations.

In July and August 1995, the Census Bureau issued invitations to local and tribal groups and agencies to participate in the delineation of statistical geographic areas for Census 2000. These included regional planning agencies, councils of governments, county planning agencies, officials of Federally recognized American Indian tribes, and officials of the 12 nonprofit Alaska Native Regional Corporations.

During 1997, the Census Bureau will provide materials and detailed guidelines to program participants for the review and delineation of block groups for Census 2000.

## A. Criteria For Delineating Block Groups For Census 2000

The Census Bureau proposes the following criteria for use in delineating Census 2000 block groups.

*1. General Characteristics*

- A block group must meet the population and boundary feature criteria and comprise a compact piece of territory.
- A census tract boundary always must be a block group boundary.
- Each census tract must contain a minimum of one block group and may have a maximum of nine block groups.
- Block groups must cover the entire land and inland water area of a census tract.
- A block group entirely within an American Indian reservation (AIR) may extend across a state or county boundary for tabulations in the American Indian geographic hierarchy. For standard data tabulations, the portion of the block group in each state and county is treated as a separate block group.

*2. Identification*

- A block group consists of all blocks within a census tract that have the same first digit and is identified using that same first digit. For example in 1990, block group 3 included all census blocks numbered in the 300s. For Census 2000, the Census Bureau will introduce a four-digit block numbering system, and block group 3 will include all census blocks numbered in the 3000s within a census tract.
- The range of acceptable block group numbers is 1 through 9. Block group numbers must always be unique within a census tract; that is, the same number cannot be repeated.
- The Census Bureau will assign a single ''zero'' block group to census tracts numbered ''0000.'' (In counties that have coastal water, territorial sea, or Great Lakes waters, the Census Bureau recommends establishing a ''0000'' census tract to provide complete area coverage.)

*3. Boundary Features*

The Census Bureau recommends that block group boundaries follow visible and identifiable features; that is, visible, perennial natural and cultural features such as roads, rivers, canals, railroads, above-ground high-tension power lines, and so forth. This provision makes the location of boundaries less ambiguous and easier for data users to locate.

State and county boundaries are always block group boundaries. The Census Bureau also permits the use of other types of legal boundaries in some states and situations where the boundaries of these governmental units tend to remain unchanged between censuses. The following features are acceptable as block group boundaries:

- All minor civil division (MCD) boundaries (generally towns or townships) in Connecticut, Indiana, Maine, Massachusetts, New Hampshire, New Jersey, New York, Pennsylvania, Rhode Island, and Vermont.
- Those MCD boundaries not conjoint with the boundaries of incorporated places that themselves are MCDs (being either coextensive with or independent of MCDs) in Illinois (townships only, not election precincts), Iowa, Kansas, Michigan, Minnesota, Missouri (governmental townships only), Nebraska (townships only, not election precincts), North Dakota, Ohio, South Dakota, and Wisconsin.
- Barrio, barrio-pueblo, and subbarrio boundaries in Puerto Rico, census subdistrict boundaries in the Virgin Islands of the United States, MCD-county and island boundaries in American Samoa, and municipal district boundaries in the Northern Mariana Islands.
- All incorporated place boundaries in Connecticut, Maine, Massachusetts, New Hampshire, New Jersey, New York, Pennsylvania, Rhode Island, and Vermont.
- Conjoint incorporated place boundaries in other states; that is, the boundary separating two different incorporated places.
- AIR boundaries.
- American Indian trust land, Alaska Native village statistical area, and Alaska Native Regional Corporation boundaries, at the discretion of the Census Bureau, insofar as such boundaries are unambiguous for allocating living quarters as part of census activities.

When the above types of features are not available for selection, the Census Bureau may, at its discretion, approve other nonstandard visible features, such as ridge lines, pipelines, intermittent streams, fence lines, and so forth. The Census Bureau also may accept, on a case-by-case basis, the boundaries of selected nonstandard and potentially nonvisible features, such as the boundaries of national parks and forests, cemeteries, or other special land-use properties, the straight-line extensions of visible features, and other lines of sight.

*4. Population Thresholds*

The Census Bureau proposes standard size criteria for most block groups in the United States, Puerto Rico, and the Island Areas (see Table 1). Smaller optimum and minimum sizes are permissible for block groups located on AIRs or comprising special places. (Special places are correctional institutions, military installations, college campuses, workers' dormitories, hospitals, nursing homes, and group homes.)

TABLE 1.—POPULATION THRESHOLDS FOR CENSUS 2000 BLOCK GROUPS

| Area(s) | Optimum | Minimum | Maximum |
|---|---|---|---|
| Standard (most areas) | 1,500 | 600 | 3,000 |
| AIRs | 1,000 | 300 | 3,000 |
| Special place block group | none | 300 | none |

If a block group located on an AIR crosses a county boundary or a state boundary, the minimum population size criterion applies to the entire area of the block group, not to the individual portions that are in separate counties or states.

*5. Final Approval of Block Groups*

The Census Bureau reserves the right to approve all block group proposals for Census 2000. The Census Bureau will make an effort to reach agreement with local and tribal participants in the block group program, but cannot approve the use of block groups as submitted if they do not meet Census 2000 criteria. If necessary, the Census Bureau will revise block group boundaries where they do not meet the boundary and population size requirements.

**B. Changes to the Criteria for Census 2000**

Most provisions of the block group criteria remain unchanged from those used in conjunction with the 1990 census, with the few exceptions summarized below:

1. For 1990 and previous decennial censuses, the Census Bureau delineated the block groups in BNAs on the basis of the number of housing units rather than population. For Census 2000, the Census Bureau is merging the census tract and BNA programs to create a single census tract program, and the size criteria for all block groups will be on the basis of population rather than the number of housing units.

2. For Census 2000, the Census Bureau is increasing the number of governmental units that have boundaries acceptable to use as block group boundaries. The added areas are: All MCDs in Indiana and selected MCDs in Illinois, Iowa, Kansas, Michigan, Minnesota, Missouri, Nebraska, North Dakota, South Dakota, and Wisconsin; the MCD-county and island areas of American Samoa; and villages in New York.

3. The Census Bureau now allows officials of Federally recognized AIRs to establish block groups that cross state or county boundaries. While the Census Bureau will publish data for each state-county-census tract-block group part, it also plans to provide summed data for all block groups that are located within an AIR and that cross state or county boundaries.

**Definitions of Key Terms**

*Alaska Native Regional Corporation (ANRC)*—A corporate entity established under the Alaska Native Claims Settlement Act of 1972, Pub. L. 92–203, as amended by Pub. L. 92–204, to conduct both the business and nonprofit affairs of Alaska Natives. Twelve ANRCs cover the entire State of Alaska except for the Annette Islands Reserve.

*Alaska Native village statistical area (ANVSA)*—A statistical entity containing the densely settled extent of an Alaska Native village that constitutes an association, band, clan, community, group, tribe, or village recognized pursuant to the Alaska Native Claims Settlement Act of 1972, Pub. L. 92–203, as amended by Pub. L. 92–204.

*American Indian reservation (AIR)*—A Federally recognized American Indian entity with boundaries established by treaty, statute, and/or executive or court order and over which American Indians have governmental jurisdiction. Along with reservation, designations such as colonies, communities, pueblos, rancherias, and reserves apply to AIRs.

*Block numbering area (BNA)*—A small-area, statistical geographic division of a county or statistically equivalent area delineated in 1990 instead of and generally geographically equivalent to a census tract. For Census 2000, the Census Bureau is merging the BNA program with the census tract program and converting all BNAs to census tracts.

*Census block*—The smallest geographic entity for which the Census Bureau collects and tabulates decennial census information; bounded on all sides by visible and nonvisible features identified by the Census Bureau in computer files and on maps.

*Census tract*—A small, relatively permanent statistical geographic subdivision of a county or statistically equivalent area defined for the tabulation of data. For Census 2000, the Census Bureau is replacing BNAs with census tracts.

*Coastal water*—Water bodies between territorial seas and inland water, the encompassing headlands being greater than one mile apart and less than 24 miles apart.

*Conjoint*—A description of a boundary shared by two adjacent geographic areas.

*Contiguous*—A description of geographic areas that are adjacent to one another, sharing either a common boundary or point.

*Great Lakes waters*—Water area beyond one-mile-wide headland embayments located in any of the five Great Lakes: Erie, Huron, Michigan, Ontario, or Superior.

*Incorporated place*—A type of governmental unit, sanctioned by state law as a city, town (except in New England, New York, and Wisconsin), village, or borough (except in Alaska and New York), having legally prescribed limits, powers, and functions.

Inland water—Water bodies entirely surrounded by land or at the point where their opening to coastal waters, territorial seas, or the Great Lakes is less than one mile across.

*Minor civil division (MCD)*—The primary governmental or administrative division of a county in 28 states, Puerto Rico, and the Island Areas having legal boundaries, names, and descriptions. MCDs represent many different types of legal entities with a wide variety of characteristics, powers, and functions depending on the state and type of MCD. In some states, some or all of the incorporated places also constitute MCDs.

*Nonvisible feature*—A map feature that is not visible on the ground, such as a city or county boundary through space, a property line, a short line-of-sight extension of a road, or a point-to-point line of sight.

*Special place*—A specific location requiring special enumeration procedures because the location includes people not in households or the area includes special land use. Special places include facilities with resident population, such as correctional institutions, military installations, college campuses, workers' dormitories, hospitals, nursing homes and group homes and land-use areas such as national parks. A special place includes the entire facility, including nonresidential areas and staff

housing units, as well as all group quarters population.

*Territorial seas*—Water bodies not included under the rules for inland water, coastal water, or Great Lakes waters (see above).

*Visible feature*—A map feature that one can see on the ground such as a road, railroad track, above-ground transmission line, stream, shoreline, fence, sharply defined mountain ridge, or cliff. A nonstandard visible feature is a feature that may not be clearly defined on the ground (such as a ridge), may be seasonal (such as an intermittent stream), or may be relatively impermanent (such as a fence). The Census Bureau generally requests verification that nonstandard features pose no problem in their location during field work.

Dated: April 1, 1997.

**Martha Farnsworth Riche,**

*Director, Bureau of the Census.*

[FR Doc. 97–11453 Filed 5–1–97; 8:45 am]

BILLING CODE 3510–07–P

---

## DEPARTMENT OF COMMERCE

## Foreign-Trade Zones Board

**[Docket 33–97]**

### Foreign-Trade Zone 82—Mobile, Alabama; Application for Foreign-Trade Subzone Status, Shell Oil Company (Oil Refinery Complex), Mobile County, Alabama

An application has been submitted to the Foreign-Trade Zones Board (the Board) by the City of Mobile, Alabama, grantee of FTZ 82, requesting special-purpose subzone status for the oil refinery complex of Shell Oil Company, located in Mobile County, Alabama. The application was submitted pursuant to the provisions of the Foreign-Trade Zones Act, as amended (19 USC 81a-81u), and the regulations of the Board (15 CFR part 400). It was formally filed on April 16, 1997.

The refinery complex (847 acres, 130 employees) consists of 2 sites in Mobile County, Alabama: *Site 1* (811 acres)—refinery complex located at 400 Industrial Parkway, Extension East, near the intersection of State Highway 158 and 43, on Chickasaw Creek, some 10 miles north of Mobile; *Site 2* (36 acres)—terminal and storage facility (6 tanks/ 1.3 million barrel capacity) located at Highway 90 Alternate and Bay Bridge Road, Blakely Island, on the Mobile River, some seven miles south of the refinery. The refinery (74,000 BPD) is used to produce fuels and petrochemical feedstocks. Fuel products include gasoline, jet fuel, distillates, residual fuels, naphthas and motor fuel blendstocks. Petrochemical feedstocks and refinery by-products include methane, ethane, propane, liquid natural gas, propylene, ethylene, butylene, butane, butadiene, benzene, toluene, xylene, carbon black oil and sulfur. Some 52 percent of crude oil and four percent of the natural gas condensate (45% and 55% of inputs, respectively) are sourced abroad.

Zone procedures would exempt the refinery under the FTZ from Customs duty payments on the foreign products used in its exports. On domestic sales, the company would be able to choose the Customs duty rates that apply to certain petrochemical feedstocks and refinery by-products (duty-free) by admitting incoming foreign crude oil and natural gas condensate in non-privileged foreign status. The duty rates on inputs range from 5.25¢/barrel to 10.5¢/barrel. The application indicates that the savings from zone procedures would help improve the refinery's international competitiveness.

In accordance with the Board's regulations, a member of the FTZ Staff has been designated examiner to investigate the application and report to the Board.

Public comment is invited from interested parties. Submissions (original and 3 copies) shall be addressed to the Board's Executive Secretary at the address below. The closing period for their receipt is July 1, 1997. Rebuttal comments in response to material submitted during the foregoing period may be submitted during the subsequent 15-day period (to July 16, 1997).

A copy of the application and accompanying exhibits will be available for public inspection at each of the following locations:

U.S. Department of Commerce, Export Assistance Center, Medical Forum Building, 7th Floor, 950 22nd Street North, Birmingham, AL 35203

Office of the Executive Secretary, Foreign-Trade Zones Board, Room 3716, U.S. Department of Commerce 14th & Pennsylvania Avenue, NW., Washington, DC 20230.

Dated: April 23, 1997.

*John J. Da Ponte, Jr. Executive Secretary.*

[FR Doc. 97–11457 Filed 5–1–97; 8:45 am]

BILLING CODE 3510–DS–P

## DEPARTMENT OF COMMERCE

## Foreign-Trade Zones Board

**[Docket 32–97]**

### Foreign-Trade Zone 84—Houston, Texas; Application for Foreign-Trade Subzone Status; LYONDELL-CITGO Refining Company, Ltd. (Oil Refinery and Petrochemical Complex), Harris County, Texas

An application has been submitted to the Foreign-Trade Zones Board (the Board) by the Port of Houston Authority, grantee of FTZ 84, requesting special-purpose subzone status for the oil refinery and petrochemical complex of LYONDELL-CITGO Refining Company Ltd. (LYONDELL–CITGO), located in Harris County, Texas. LYONDELL-CITGO is a limited liability company owned by subsidiaries of CITGO Petroleum Corporation (subsidiary of Petroleos de Venezuela, S.A., the national oil company of Venezuela) and Lyondell Petrochemical Corporation. The application was submitted pursuant to the provisions of the Foreign-Trade Zones Act, as amended (19 U.S.C. 81a–81u), and the regulations of the Board (15 CFR part 400). It was formally filed on April 15, 1997.

The refinery and petrochemical complex (645 acres, 1,300 employees) consists of 4 sites in the Houston metropolitan area of Harris County, Texas: *Site 1* (500 acres)-refinery complex located at 12000 Lawndale Road, on the Houston Ship Channel, within the city limits of both Houston and Pasadena; *Site 2* (20 acres)—Allendale Tank Farm (4 tanks/713,000 barrel capacity) located south of the refinery, across Lawndale Rd.; *Site 3* (65 acres) South Tank Farm (16 tanks/1.9 million barrel capacity) located south of the refinery across Lawndale Rd., east of Site 2; *Site 4* (60 acres)—''225'' Tank Farm (13 tanks/3.6 million barrel capacity) located south of Sites 1–3, across State Highway 225.

The refinery (265,000 BPD) is used to produce fuels and petrochemical feedstocks. Fuel products include include gasoline, jet fuel, distillates, residual fuels, naphthas and motor fuel blendstocks. Petrochemical feedstocks and refinery by-products include methane, ethane, propane, liquid natural gas. propylene, ethylene, butylene, butane, butadiene, benzene, toluene, xylene, petroleum coke, asphalt, carbon black oil and sulfur. Some 95 percent of the crude oil (83 percent of inputs), and some motor fuel blendstocks are sourced abroad.

Zone procedures would exempt the refinery from Customs duty payments on the foreign products used in its exports. On domestic sales, the company would be able to choose the Customs duty rates that apply to certain petrochemical feedstocks and refinery by-products (duty-free) by admitting incoming foreign crude oil and natural gas condensate in non-privileged foreign status. The duty rates on inputs range from 5.25¢/barrel to 10.5¢/barrel. Under the FTZ Act, certain merchandise in FTZ status is exempt from *ad valorem* inventory-type taxes. The application indicates that the savings from zone procedures would help improve the refinery's international competitiveness.

In accordance with the Board's regulations, a member of the FTZ Staff has been designated examiner to investigate the application and report to the Board.

Public comment is invited from interested parties. Submissions (original and 3 copies) shall be addressed to the Board's Executive Secretary at the address below. The closing period for their receipt is July 1, 1997. Rebuttal comments in response to material submitted during the foregoing period may be submitted during the subsequent 15-day period (to July 16, 1997).

A copy of the application and accompanying exhibits will be available for public inspection at each of the following locations:

U.S. Department of Commerce, Export Assistance Center, Suite 1160, 500 Dallas, Houston, Texas 77002

Office of the Executive Secretary, Foreign-Trade Zones Board, Room 3716, U.S. Department of Commerce, 14th & Pennsylvania Avenue, NW., Washington, DC 20230.

Dated: April 23, 1997.

**John J. Da Ponte, Jr.,**

*Executive Secretary.*

[FR Doc. 97–11456 Filed 5–1–97; 8:45 am]

BILLING CODE 3510–DS–P

## DEPARTMENT OF COMMERCE

## Foreign-Trade Zones Board

**[Order No. 873]**

## Expansion of Foreign-Trade Zone 168 Dallas/Ft. Worth, TX Area

Pursuant to its authority under the Foreign-Trade Zones Act of June 18, 1934, as amended (19 U.S.C. 81a–81u), the Foreign-Trade Zones Board (the Board) adopts the following Order.

Whereas, an application from the Dallas/Fort Worth Maquila Trade Development Corporation, grantee of Foreign-Trade Zone No. 168, for authority to expand its general-purpose zone to include a site in the City of Grand Prairie, Texas, within the Dallas/Fort Worth Customs port of entry, was filed by the Foreign-Trade Zones (FTZ) Board on November 21, 1995 (Docket 77–95, 60 FR 61528, 11/30/95);

Whereas, notice inviting public comment was given in the **Federal Register** and the application has been processed pursuant to the FTZ Act and the Board's regulations; and,

Whereas, the Board has found that the requirements of the Act and the regulations are satisfied, and that the proposal is in the public interest;

Now, therefore, the Board hereby orders:

The grantee is authorized to expand its zone as requested in the application, subject to the Act and the Board's regulations, including Section 400.28.

Signed at Washington, DC, this 23rd day of April 1997.

**Robert S. LaRussa,**

*Acting Assistant Secretary of Commerce for Import Administration, Alternate Chairman, Foreign-Trade Zones Board.*

[FR Doc. 97–11458 Filed 5–1–97; 8:45 am]

BILLING CODE 3510–DS–P

## DEPARTMENT OF COMMERCE

## International Trade Administration

## Antidumping or Countervailing Duty Order, Finding, or Suspended Investigation; Opportunity to Request Administrative Review

**AGENCY:** Import Administration, International Trade Administration, Department of Commerce.

**ACTION:** Notice of Opportunity to Request Administrative Review of Antidumping or Countervailing Duty Order, Finding, or Suspended Investigation.

### Background

Each year during the anniversary month of the publication of an antidumping or countervailing duty order, finding, or suspension of investigation, an interested party, as defined in section 771(9) of the Tariff Act of 1930, as amended, may request, in accordance with section 353.22 or 355.22 of the Department of Commerce (the Department) Regulations (19 CFR 353.22/355.22 (1993)), that the Department conduct an administrative review of that antidumping or countervailing duty order, finding, or suspended investigation.

### Opportunity To Request a Review

Not later than the last day of May 1997, interested parties may request administrative review of the following orders, findings, or suspended investigations, with anniversary dates in May for the following periods:

| | Period |
|---|---|
| *Antidumping Proceedings:* | |
| Argentina: Rectangular Carbon Steel Tubing, A–357–802 | 5/1/96–4/30/97 |
| Brazil: Certain Malleable Cast Iron Pipe Fittings, A–351–505 | 5/1/96–4/30/97 |
| Brazil: Iron Construction Castings, A–351–503 | 5/1/96–4/30/97 |
| Brazil: Orange Juice, A–351–605 | 5/1/96–4/30/97 |
| France: Ball Bearings, A–427–801 | 5/1/96–4/30/97 |
| France: Cylindrical Roller Bearings, A–427–801 | 5/1/96–4/30/97 |
| France: Spherical Plain Bearings, A–427–801 | 5/1/96–4/30/97 |
| Germany: Ball Bearing, A–428–801 | 5/1/96–4/30/97 |
| Germany: Cylindrical Roller Bearings, A–428–801 | 5/1/96–4/30/97 |
| Germany: Spherical Plain Bearings, A–428–801 | 5/1/96–4/30/97 |
| India: Pipes and Tubes, A–533–502 | 5/1/96–4/30/97 |
| Italy: Ball Bearings, A–475–801 | 5/1/96–4/30/97 |
| Italy: Cylindrical Roller Bearings, A–475–801 | 5/1/96–4/30/97 |
| Japan: Ball Bearings, A–588–804 | 5/1/96–4/30/97 |
| Japan: Cement, A–588–815 | 5/1/96–4/30/97 |
| Japan: Cylindrical Roller Bearings, A–588–804 | 5/1/96–4/30/97 |

| | Period |
|---|---|
| Japan: Impression Fabric, A–588–066 | 5/1/96–4/30/97 |
| Japan: Polyvinyl Alcohol, A–588–836 | 10/10/95–4/30/97 |
| Japan: Spherical Plain Bearings, A–588–804 | 5/1/96–4/30/97 |
| Romania: Ball Bearings, A–485–801 | 5/1/96–4/30/97 |
| Russia: Pure Magnesium, A–821–805 | 5/1/96–4/30/97 |
| Singapore: Ball Bearings, A–559–801 | 5/1/96–4/30/97 |
| South Korea: Malleable Cast Iron Pipe Fittings, Other than Grooved, A–580–507 | 5/1/96–4/30/97 |
| South Korea: DRAMs, A–580–812 | 5/1/96–4/30/97 |
| Sweden: Ball Bearings, A–401–801 | 5/1/96–4/30/97 |
| Sweden: Cylindrical Roller Bearings, A–401–801 | 5/1/96–4/30/97 |
| Taiwan: Certain Welded Carbon Steel Pipe & Tubes, A–583–008 | 5/1/96–4/30/97 |
| Taiwan: Malleable Cast Iron Pipe Fittings, Other Than Grooved, A–583–507 | 5/1/96–4/30/97 |
| Taiwan: Polyvinyl Alcohol, A–583–824 | 10/10/95–4/30/97 |
| Thailand: Ball Bearings, A–549–801 | 5/1/96–4/30/97 |
| The People's Republic of China: Construction Castings, A–570–502 | 5/1/96–4/30/97 |
| The People's Republic of China: Polyvinyl Alcohol, A–570–842 | 10/10/95–4/30/97 |
| The People's Republic of China: Pure Magnesium, A–570–832 | 5/1/96–4/30/97 |
| The Ukraine: Pure Magnesium, A–823–806 | 5/1/96–4/30/97 |
| The United Kingdom: Ball Bearings, A–412–801 | 5/1/96–4/30/97 |
| The United Kingdom: Cylindrical Roller Bearings, A–412–801 | 5/1/96–4/30/97 |
| Turkey: Pipes and Tubes, A–489–501 | 5/1/96–4/30/97 |
| *Countervailing Proceedings:* | |
| Brazil: Certain Heavy Iron Construction Castings, C–351–504 | 1/1/96–12/31/96 |
| Sweden: Viscose Rayon Staple Fiber, C–401–056 | 1/1/96–12/31/96 |
| Venezuela: Ferrosilicon, C–307–808 | 1/1/96–12/31/96 |

In accordance with sections 353.22(a) and 355.22(a) of the regulations, an interested party as defined by section 353.2(k) may request in writing that the Secretary conduct an administrative review. The Department has changed its requirements for requesting reviews for countervailing duty orders. Pursuant to 19 CFR 355.22(a) of the regulations, an interested party must specify the individual producers or exporters covered by the order or suspension agreement for which they are requesting a review (Interim Regulations, 60 FR 25130, 25137 (May 11, 1995)). Therefore, for both antidumping and countervailing duty reviews, the interested party must specify for which individual producers or exporters covered by an antidumping finding or an antidumping or countervailing duty order it is requesting a review, and the requesting party must state why it desires the Secretary to review those particular producers or exporters. If the interested party intends for the Secretary to review sales of merchandise by an exporter (or a producer if that producer also exports merchandise from other suppliers) which were produced in more than one country of origin, and each country of origin is subject to a separate order, then the interested party must state specifically, on an order-by-order basis, which exporter(s) the request is intended to cover.

Seven copies of the request should be submitted to the Assistant Secretary for Import Administration, International Trade Administration, Room 1870, US Department of Commerce, 14th Street & Constitution Avenue, NW., Washington, DC 20230. The Department also asks parties to serve a copy of their requests to the Office of Antidumping/Countervailing Enforcement, Attention: Sheila Forbes, in room 3065 of the main Commerce Building. Further, in accordance with section 353.31(g) or 353.31(g) of the regulations, a copy of each request must be served on every party on the Department's service list.

The Department will publish in the **Federal Register** a notice of ''Initiation of Administrative Review of Antidumping or Countervailing Duty Order, Finding, or Suspended Investigation'' for requests received by the last day of May 1997. If the Department does not receive, by the last day of May 1997, a request for review of entries covered by an order, finding, or suspended investigation listed in this notice and for the period identified above, the Department will instruct the Customs Service to assess antidumping or countervailing duties on those entries at a rate equal to the cash deposit of (or bond for) estimated antidumping or countervailing duties required on those entries at the time of entry, or withdrawal from warehouse, for consumption and to continue to collect the cash deposit previously ordered.

This notice is not required by statute but is published as a service to the international trading community.

Dated: April 28, 1997.

**Jeffrey P. Bialos,**

*Principal Deputy Assistant Secretary for Import Administration.*

[FR Doc. 97–11461 Filed 5–1–97; 8:45 am]

BILLING CODE 3510–DS–M

## DEPARTMENT OF COMMERCE

### International Trade Administration

**[C–535–001]**

### Cotton Shop Towels from Pakistan; Final Results of Countervailing Duty Administrative Reviews

**AGENCY:** Import Administration, International Trade Administration, Department of Commerce.

**ACTION:** Notice of final results of countervailing duty administrative reviews.

**SUMMARY:** On September 25, 1996, the Department of Commerce (the Department) published in the **Federal Register** its preliminary results of administrative reviews of the countervailing duty order on cotton shop towels from Pakistan for the periods January 1, 1992 through December 31, 1992 and January 1, 1993 through December 31, 1993. We have completed these reviews and determine the net subsidy to be 7.81 percent *ad valorem* for all companies for 1992. For 1993, we determine the net subsidy to be 11.50 percent *ad valorem* for Eastern Textiles (Eastern), 11.54 percent *ad valorem* for Creation (Pvt.), Ltd. (Creation), and 5.02 percent *ad valorem*

for all other companies. We will instruct the U.S. Customs Service to assess countervailing duties as indicated above.

**EFFECTIVE DATE:** May 2, 1997.

**FOR FURTHER INFORMATION CONTACT:** Lorenza Olivas or Kelly Parkhill, Office of CVD/AD Enforcement VI, Import Administration, International Trade Administration, U.S. Department of Commerce, 14th Street and Constitution Avenue, N.W., Washington, D.C. 20230; telephone: (202) 482–2786.

**SUPPLEMENTARY INFORMATION:**

## Background

On September 25, 1996, the Department published in the **Federal Register** (61 FR 50273) the preliminary results of its administrative reviews of the countervailing duty order on cotton shop towels from Pakistan. The Department has now completed these administrative reviews in accordance with section 751 of the Tariff Act of 1930, as amended (the Act).

We invited interested parties to comment on the preliminary results. On October 24, 1996, the Government of Pakistan, the Towel Manufacturers Association of Pakistan, and the exporters of shop towels from Pakistan (respondents), submitted case briefs. On November 1, 1996, we received rebuttal briefs from Milliken & Company, petitioner. The reviews cover the periods January 1, 1992 through December 31, 1992 and January 1, 1993 through December 31, 1993. The 1992 review covers 17 manufacturers/exporters of the subject merchandise. The 1993 review covers 20 manufacturers/exporters. Both reviews cover five programs.

## Applicable Statute and Regulations

The Department is conducting these administrative reviews in accordance with section 715(a) of the Act. Unless otherwise indicated, all citations to the statute and to the Department's regulations are in reference to the provisions as they existed on December 31, 1994. References to the Department's *Countervailing Duties; Notice of Proposed Rulemaking and Request for Public Comments*, 54 FR 23366 (May 31, 1989) (*Proposed Regulations*), are provided solely for further explanation of the Department's countervailing duty practice. Although the Department has withdrawn the particular rulemaking proceeding pursuant to which the *Proposed Regulations* were issued, the subject matter of these regulations is being considered in connection with an ongoing rulemaking proceeding which, among other things, is intended to conform the Department's regulations to the Uruguay Round Agreements Act. *See* 60 FR 80 (Jan. 3, 1995).

## Scope of the Review

The subject merchandise is cotton shop towels from Pakistan. During the review periods, this merchandise was classifiable under item number 6307.10.20 of the Harmonized Tariff Schedule (HTS). The HTS item number is provided for convenience and Customs purposes. The written description remains dispositive.

## Best Information Available for Creation

Section 776(c) of the Act requires the Department to use best information available (BIA) ''whenever a party or any other person refuses or is unable to produce information requested in a timely manner and in the form required, or otherwise significantly impeded an investigation.''

In determining what rate to use as BIA, the Department follows a two-tiered methodology. The Department assigns lower BIA rates to those respondents who cooperated in an administrative review (tier two) and rates based on more adverse assumptions to respondents who did not cooperate, or significantly impeded the proceeding (tier one). *See Allied Signal Aerospace Co.* v. *United States,* 28 F. 3d 1188 (Fed. Cir. 1994), *cert. denied,* 1995 U.S. Lexis 100 (1995). Creation, an exporter only during 1993, did not respond to the Department's initial or two supplemental questionnaires. However, the Government of Pakistan provided information regarding Creation's volume and value of exports during the 1993 administrative review period and regarding Creation's non-use of certain programs during that review period. For these final results we have utilized the information provided by the Government of Pakistan to the extent that it permitted us to calculate a program-specific rate for Creation. *See, Certain Steel Products from Italy; Affirmative Countervailing Duty Determinations* (58 FR 37327, 37329; July 9, 1993). In the case of two programs, this information was inadequate and, in accordance with section 776 of the Act, we assigned to Creation a tier-one BIA rate for those programs for 1993. This tier-one BIA rate is the highest individual rate found, either in the investigation or in a subsequent administrative review, for these programs.

Most companies did not provide information for either review period regarding the benefits received under the Income Tax Reduction Program. For these companies, we used tier one BIA for this program in both reviews. For 1993, eight companies did attempt to cooperate but provided inadequate information as to the benefit received under this program. For these companies, we used tier two BIA.

## Calculation Methodology for Assessment and Cash Deposit Purposes

In accordance with *Ceramica Regiomontana, S.A.* v. *United States,* 853 F. Supp. 431 (CIT 1994) (*Ceramica*), we calculated the net subsidy on a country-wide basis by first calculating the total subsidy rate for each company subject to the administrative review. We then weighted the rate received by each company using as the weight its share of total exports to the United States of subject merchandise, including all companies, even those with *de minimis* and zero rates. We then summed the individual companies' weighted rates to determine the country-wide, weighted-average subsidy rate from all programs benefiting exports of subject merchandise to the United States.

Since the country-wide rate calculated using this methodology was above *de minimis,* as defined by 19 CFR § 355.7 (1994), for each review period, we examined the net subsidy rate calculated for each company to determine whether individual company rates differed significantly from the weighted-average country-wide rate, pursuant to 19 CFR § 355.22(d)(3). None of the companies had net subsidy rates which were significantly different during the 1992 review period pursuant to 19 CFR § 355.22(d)(3). Therefore, all companies are assigned the country-wide rate in 1992. In 1993, Eastern had a significantly different rate. Based on BIA, Creation also had a significantly different rate. These companies are treated separately for assessment and cash deposit purposes. All other companies are assigned the country-wide rate.

## Analysis of Programs

Based upon responses to our questionnaire and written comments from the interested parties, we determine the following:

### I. Programs Conferring Subsidies

*A. Export Financing*

In the preliminary results, we found that this program conferred countervailable benefits on the subject merchandise. Our analysis of the comments submitted by the interested parties, summarized below, has not led us to change our findings from the preliminary results. On this basis, we

determine the net subsidy from this program for 1992 to be 0.72 percent *ad valorem* for all manufacturers and exporters of shop towels from Pakistan. For 1993, we determine the net subsidy from this program to be 0.49 percent *ad valorem* for all manufacturers and exporters of shop towels from Pakistan, except for Eastern, who has a significantly different subsidy rate. The rate for Eastern is 6.31 percent *ad valorem*. As BIA, we assigned to Creation the rate determined for Eastern in this review period because it is the highest rate calculated for any company that used this program in any administrative review.

*B. Excise Tax, Sales Tax and Customs Duty Rebate Programs*

In the preliminary results, we found that these programs conferred countervailable benefits on the subject merchandise. Our analysis of the comments submitted by the interested parties, summarized below, has not led us to change our findings from the preliminary results. On this basis, we determine the net subsidy from these programs to be 5.67 percent *ad valorem* for all manufacturers and exporters of shop towels from Pakistan during 1992. For 1993, we determine the net subsidy from these programs to be 3.35 percent *ad valorem* for all manufacturers and exporters of shop towels from Pakistan, including Creation. Because we had adequate information on the record for this program for Creation to calculate a benefit from this program, we did not assign BIA to that company.

*C. Income Tax Reductions*

In the preliminary results, we found that this program conferred countervailable benefits on the subject merchandise. Our analysis of the comments submitted by the interested parties, summarized below, has not led us to change our findings from the preliminary results. On this basis, we determine the net subsidy from this program to be 1.42 percent *ad valorem* for all manufacturers and exporters of shop towels from Pakistan during 1992. For 1993, we determine the net subsidy from this program to be 1.19 percent *ad valorem* for all manufacturers and exporters of shop towels from Pakistan, except for Eastern Textiles and Creation, who had significantly different overall subsidy rates. For Eastern, we calculated the benefit to be 1.84 *ad valorem*. For Creation, we assigned a tier one BIA rate of 1.88 percent *ad valorem* because it is the highest rate calculated for any company that used this program in any administrative review.

**II. Programs Found to be Not Used**

In the preliminary results, we found that the producers and/or exporters of the subject merchandise did not apply for or receive benefits under the following programs:

- Import Duty Rebates
- Export Credit Insurance

Our analysis of the comments submitted by the interested parties, summarized below, has not led us to change our findings from the preliminary results.

*Analysis of Comments*

Comment 1

Respondents argue that for those firms that attempted to respond to questions regarding the income tax reduction program but were unable to do so, the Department should not apply as BIA the highest rate from a prior review, particularly since the benefit from the program was significantly reduced during the review period. Rather, the Department should apply the highest rate found for the program for a responding company in this review.

Petitioner, on the other hand, argues that the Department should continue to use as BIA the highest rate found in a previous review.

*Department's Position:* We disagree with respondents. In this initial questionnaire, the Department requested information regarding the income tax program which was available to exporters of shop towels. In supplemental questionnaires, we again requested the information needed to determine the extent of benefits from this program. While most respondents attempted to respond, some failed to provide the specific program information requested. Section 776(c) of the Tariff Act requires the Department to rely upon the best information otherwise available to establish a respondent's benefits when necessary information is not available on the record or a party refuses or is unable to produce the information requested. *See also* 19 CFR section 355.37 and section 355.35 of the Department regulations. The Department applies two types of BIA: First tier BIA is used when a respondent refuses to cooperate or substantially impedes a proceeding; second tier BIA is used when a respondent has substantially cooperated but failed to provide the information in a timely manner or in the form required.

Where an exporter cooperated by attempting to provide data, but failed to provide adequate information on which to calculate benefit during 1993, we relied on company-specific information provided in the 1992 review for tier two BIA. Where a firm failed to provide specific program information and there was no information on the record, we used tier one BIA for both reviews. This tier one BIA is the highest individual rate found, either in the investigation or in a subsequent administrative review, for this program. The Department's use of BIA in this manner is in accordance with the Department's practice and judicial precedent; therefore, we have not changed the BIA from the preliminary results.

Comment 2

Respondents argue that in calculating the benefit derived from the income tax reduction in 1993, when the new system of tax collection (preemptive tax) for exporters was in effect for the entire year, the Department inappropriately added benefits under the previous program to the benefits provided from the current program. Respondents contend that the Department should determine the benefit to be either the *ad valorem* tax benefit found for each responding company using the information provided or simply the preemptive tax rate in effect in 1993. According to respondents, they received benefits from one or the other system, but not from both.

Petitioner disagrees with respondents' position. Petitioner contends that given respondents failure to provide data required to calculate the income tax reduction benefit, the Department must assign these companies as best information available the highest rate found in a previous review. Otherwise, it should use the rates applied in the preliminary results.

*Department's positions:* We disagree with respondents. The Department's tax methodology is based on a cash flow basis which for countervailing duty purposes means that the benefit occurs when the tax benefit is realized by the firm receiving the benefit. Section 355.48(b) of the *Proposed Regulations* states that, ''[T]he cash flow and economic effect of a benefit normally occurs when a firm experiences a difference in cash flow, either in the payment it receives or the outlays it makes, as result of its receipt of the benefit.'' In the case of a direct tax, ordinarily the cash flow occurs at the time a firm can calculate the amount of benefit, which normally will be the time at which a company files its tax return. In Pakistan, the fiscal tax year for the exporters ends in March. Tax returns for one year are filed the following year. Thus, any tax benefits earned during a given fiscal year are received by the exporters in the following year. Since the prior tax system was still in effect

during part of 1992, exporters received an income tax deduction reflected in the tax return for tax fiscal year 1992/1993 filed in 1993. Thus, according to our cash flow methodology, benefits from the previous program were realized in 1993. Moreover, under the preemptive tax system, which was in effect in 1993, commercial banks were required to withhold the income tax at the source from all foreign exchange proceeds. The amount withheld became the company's final tax liability. Therefore, under the new tax system of collecting income tax from exporters, the benefit is effectively realized by the firm at the time the banks withhold the income tax. Accordingly, the Department was correct in adding benefits derived under both tax systems to determine the benefit derived from this program in 1993.

Comment 3

Respondents argue that the excise tax rebate should not be found countervailable because the excise tax is paid on cotton yarn and then rebated upon export. Petitioner argues that the Department correctly calculated the benefit from the export tax credit because the Government of Pakistan failed to establish the required linkage between the taxes paid and the rebates received.

*Department's Position:* We agree with petitioner. In the investigation and subsequent reviews, we found the rebate of excise tax was countervailable because the Government of Pakistan failed to establish the required linkage and comparison between taxes paid and rebates provided. *See Preliminary Results of Countervailing Duty Administrative Review: Cotton Shop Towels from Pakistan* (58 FR 32104; June 8, 1993) and *Final Results of Countervailing Duty Administrative Review: Cotton Shop Towels from Pakistan* (58 FR 48038; September 14, 1993). As stated in the preliminary results of these reviews, the government did not provide new information to establish linkage. Therefore, we continue to find the rebate of excise taxes countervailable.

Comment 4

Repsondents argue that for the 1993 review, the Department improperly included company rates that are based on BIA in the calculation of the country-wide rate. They also contend that it is inappropriate to include, in the calculation, company rates which are ''significantly'' higher than the country-wide rate. Petitioner, on the other hand, argues that the Department's calculation of the country-wide rate is correct.

*Department's Position:* We disagree with respondents. On May 4, 1994, the Court of International Trade (the Court) rules, pursuant to *Ceramica*, that the Department is required to calculate a country-wide countervailing duty rate by weight averaging the benefits received by all companies by their proportion of exports to the United States, inclusive of zero rate firms and *de minimis* firms, pursuant to the methodology set forth in *Ipsco* v *United States*, 899 F.2d 1192 (Fed. Cir. 1990).'' (*Ipsco*). Given that the Court in *Ceramica* and *Ipsco* states that the Department should include all company rates, there is no legal basis for excluding ''significantly different'' rates, including BIA rates. (*See Certain Iron-Metal Castings From India: Final Results of Countervailing Duty Administrative Review* (60 FR 44848; August 29, 1995), at comment 13 and *Bricks From Mexico: Amended Revocation of Countervailing Duty Order and Amended Final Results of Countervailing Duty Administrative Review* (61 FR 26162; May 24, 1996). Therefore, we have not changed the country-wide rate calculation methodology from our preliminary results.

**Final Results of Review**

For 1992, we determine that net subsidy to be 7.81 percent *ad valorem* for all companies. For 1993, we determine the net subsidy to be 11.50 percent *ad valorem* for Eastern, 11.54 percent *ad valorem* for Creation and 5.03 percent *ad valorem* for all other companies.

The Department will instruct the U.S. Customs Service to assess countervailing duties of 7.81 percent *ad valorem* for all shipments of the subject merchandise exported from Pakistan on or after January 1, 1992 and on or before December 31, 1992. For all shipments of the subject merchandise exported from Pakistan on or after January 1, 1993 and on or before December 31, 1993, the Department will instruct the U.S. Customs Service to assess countervailing duties of 11.50 percent *ad valorem* for all shipments of the subject merchandise from Eastern, 11.54 percent *ad valorem* for all shipments of the subject merchandise from Creation and 5.02 percent *ad valorem* from all others.

The Department will also instruct the U.S. Customs Service to collect a cash deposit of estimated countervailing duties of 11.50 percent of the f.o.b. invoice price on all shipments of this merchandise from Eastern, 11.54 percent of the f.o.b. invoice price on all shipments of this merchandise from Creation, and 5.02 percent of the f.o.b. invoice price from all others on all shipments of this merchandise entered, or withdrawn from warehouse, for consumption on or after the date of publication of the final results of these reviews.

This notice serves as a reminder to parties subject to administrative protective order (APO) of their responsibility concerning the disposition of proprietary information disclosed under APO in accordance with 19 CFR. 355.34(d). Timely written notification of return/destruction of APO materials or conversion to judicial protective order is hereby requested. Failure to comply with the regulations and the terms of an APO is a sanctionable violation.

These administrative reviews and notice are in accordance with section 751(a)(1) of the Act (19 U.S.C. 1675(a)(1)) and 19 CFR 355.22.

Dated: April 24, 1997.

**Robert S. LaRussa,**

*Acting Assistant Secretary for Import Administration.*

[FR Doc. 97–11460 Filed 5–1–97; 8:45 am]

BILLING CODE 3510–DS–M

## DEPARTMENT OF COMMERCE

### International Trade Administration

**[C–357–803, C–357–403, C–357–002, and C–357–005]**

### Leather from Argentina, Wool from Argentina, Oil Country Tubular Goods from Argentina, and Carbon Steel Cold-Rolled Flat Products from Argentina; Preliminary Results of Changed Circumstances Countervailing Duty Reviews

**AGENCY:** Import Administration, International Trade Administration, Department of Commerce.

**ACTION:** Notice of preliminary results of changed circumstances countervailing duty reviews and intent to revoke or amend the revocation of countervailing duty orders.

**SUMMARY:** The Department of Commerce (the Department) is conducting changed circumstances reviews of the countervailing duty orders on *Leather from Argentina* (55 FR 40212), *Wool from Argentina* (48 FR 14423), *Oil Country Tubular Goods from Argentina* (OCTG) (49 FR 46564), and *Carbon Steel Cold-Rolled Flat Products from Argentina* (Cold-Rolled) (49 FR 18006). The Department initiated these reviews on April 2, 1996 to determine whether it has the authority to assess countervailing duties on entries of merchandise covered by these orders

occurring on or after September 20, 1991—the date on which Argentina became a ''country under the Agreement'' within the meaning of 19 U.S.C. § 1303(a)(1) (1988) (repealed 1994). The Department preliminarily determines that based upon the ruling of the U.S. Court of Appeals for the Federal Circuit (Federal Circuit) in *Ceramica Regiomontana* v. *United States*, 64 F.3d 1579, 1582 (Fed. Cir. 1995), it does not have the authority to assess countervailing duties on entries of merchandise covered by these orders occurring on or after September 20, 1991. As a result, we have preliminarily determined to revoke the orders on Wool, Leather, and OCTG with respect to all unliquidated entries occurring on or after September 20, 1991. With respect to Cold-Rolled, the order was revoked effective January 1, 1995; therefore, we intend to amend the effective date of the revocation to September 20, 1991. We invite interested parties to comment on these preliminary results.

**EFFECTIVE DATE:** May 2, 1997.

**FOR FURTHER INFORMATION CONTACT:** Richard Herring, Office of AD/CVD Enforcement VI, Import Administration, International Trade Administration, U.S. Department of Commerce, 14th Street and Constitution Avenue, N.W., Washington, D.C. 20230; telephone: (202) 482–2786.

**SUPPLEMENTARY INFORMATION:**

## Scope of Reviews

The scope of each of the four countervailing duty orders is detailed in the Appendix to this notice.

## Background

*I. The Orders*

The countervailing duty orders on Leather, Wool, Cold-Rolled, and OCTG from Argentina were issued pursuant to former section 303 of the Tariff Act of 1930, as amended (the Act) (repealed, effective January 1, 1995, by the Uruguay Round Agreements Act). Under former section 303, the Department could assess (or ''levy'') countervailing duties, without an injury determination, on two types of imports: (i) dutiable merchandise from countries that were not signatories of the 1979 Subsidies Code or ''substantially equivalent'' agreements (otherwise known as ''countries under the Agreement''), and (ii) duty-free merchandise from countries that were not signatories of the 1947 General Agreement on Tariffs and Trade (1947 GATT). *See* S. Rep. No. 249, 96th Cong. 1st Sess. 103–06 (1979); H. Rep. No. 317, 96th Cong. 1st Sess. 43, 49–50 (1979). At the time these countervailing duty orders were issued, Wool, Leather, Cold-Rolled and OCTG were dutiable. Also at that time, Argentina was not a ''country under the Agreement'' and, therefore, U.S. law did not require injury determinations as a prerequisite to the issuance of these orders.

*II. The Ruling by the Court of Appeals for the Federal Circuit Regarding Ceramic Tile from Mexico*

On September 6, 1995, the Federal Circuit held, in a case involving imports of dutiable ceramic tile, that once Mexico became a ''country under the Agreement'' on April 23, 1985 pursuant to the Understanding between the United States and Mexico Regarding Subsidies and Countervailing Duties (the Mexican MOU), the Department could not assess countervailing duties on ceramic tile from that country under former section 303(a)(1) of the Act. *Ceramica Regiomontana* v. *United States*, 64 F.3d 1579, 1582 (Fed. Cir. 1995) (*Ceramica*). ''After Mexico became a 'country under the Agreement,' the only provision under which ITA could continue to impose countervailing duties was section 1671.'' *Id.* One of the prerequisites to the assessment of countervailing duties under 19 U.S.C. § 1671 (1988), according to the Federal Circuit, is an affirmative injury determination. *See also Id.* at § 1671e. However, at the time the countervailing duty order on ceramic tile was issued, the requirement of an affirmative injury determination under U.S. law was not applicable. Therefore, the Federal Circuit looked to see whether the statute contained any transition rules when Mexico became a country under the Agreement which might provide the order on tile with the required injury test. Specifically, the Federal Circuit looked at section 104(b) of the Trade Agreements Act of 1979, Pub. L. No. 96–39 (July 20, 1979) (1979 Act) and found that there were no statutory means to provide an injury test.

Section 104(b) was designed to provide an injury test for certain countervailing duty orders issued under former section 303 prior to the effective date of the 1979 Act (which established Title VII and, in particular, section 701 of the Act). However, in order to induce other countries to accede to the 1979 Subsidies Code (or substantially equivalent agreements), the window of opportunity was intentionally limited. In order to qualify (i) the exporting nation had to be a country under the Agreement (*e.g.*, a signatory of the Subsidies Code) by January 1, 1980, (ii) the order had to be in existence on January 1, 1980 (*i.e.*, the effective date of Title VII), and (iii) the exporting country (or in some instances its exporters) had to request the injury test on or before January 2, 1983.

In *Ceramica*, the countervailing duty order on ceramic tile was issued in 1982 and Mexico did not become a country under the Agreement until April 23, 1985. Therefore, the Federal Circuit held that in the absence of an injury test and the statutory means to provide an injury test, the Department could not assess countervailing duties on ceramic tile and the Federal Circuit ordered the Department to revoke the order effective April 23, 1985 (*i.e.*, the date Mexico became a country under the Agreement). *Ceramica*, 64 F.3d at 1583. As the Federal Circuit stated, once Mexico became a ''country under the Agreement,'' ''[t]he only statutory authority upon which Congress could impose duties was section 1671. Without the required injury determination, Commerce lacked authority to impose duties under section 1671.''

*III. The Issue*

On September 20, 1991, the United States and Argentina signed the Understanding Between the United States of America and the Republic of Argentina Regarding Subsidies and Countervailing Duties (Argentine MOU). Section III of the Argentine MOU contains provisions substantially equivalent to the provisions in the Mexican MOU that were before the Federal Circuit in *Ceramica*. Therefore, on April 2, 1996, the Department initiated the instant changed circumstances reviews in order to determine whether it has the authority, in light of the *Ceramica* decision, to assess countervailing duties on unliquidated entries of merchandise made on or after September 20, 1991 (*i.e.*, the effective date of the Argentine MOU) which are covered by the orders on *Leather from Argentina, Wool from Argentina, OCTG from Argentina, and Cold-Rolled from Argentina. Initiation of Changed Circumstances Countervailing Duty Administrative Reviews: Leather from Argentina, Wool from Argentina, Oil Country Tubular Goods from Argentina, and Cold-Rolled Carbon Steel Flat Products from Argentina*, 61 FR 14553 (Apr. 2, 1996).

Preliminary Results of Changed Circumstances Countervailing Duty Administrative Reviews and Intent to Revoke, or Amend the Revocation of, Countervailing Duty Orders

The orders on Leather, Wool, OCTG, and Cold-Rolled from Argentina involve

the same set of pertinent facts as the Department faced in connection with the countervailing duty order on ceramic tile from Mexico. For this reason, the Federal Circuit's decision in *Ceramica* applies to the orders against Argentina, and requires the Department to revoke these orders as of the date Argentina became a ''country under the Agreement.''

First, at the time the countervailing duty orders on Mexico and Argentina were issued, the requirement of an affirmative injury determination under U.S. law was not applicable. Second, both countries subsequently entered into substantially equivalent agreements with the United States and, hence, became ''countries under the Agreement'' within the meaning of former section 303(a)(1) of the Act. Third, once Mexico and Argentina qualified as countries under the Agreement, the assessment of countervailing duties on subsequent entries of dutiable merchandise became dependent upon a finding of subsidization *and* injury in accordance with section 701 of the Act (*i.e.,* 19 U.S.C. § 1671). *See Ceramica,* 64 F.3d at 1582. Fourth, none of the transition rules in effect when both countries attained this status afforded the statutory means of providing an injury test. As explained above, section 104 of the 1979 Act only applies to countervailing duty orders issued before January 1, 1980. The parties have raised the question of whether section 271 of the Uruguay Round Agreements Act (adding new section 753 to the Act) applies to these orders. Section 753 established a mechanism to provide an injury test for outstanding countervailing duty orders issued under former section 303. However, section 753 of the Act was not enacted into law until January 1, 1995. Therefore, pursuant to the Federal Circuit's reasoning in *Ceramica,* section 753 is not applicable under these circumstances.

Pursuant to section 751(d) of the Act, the Department may revoke, in whole or in part, a countervailing duty order if the Department determines, based on a review under section 751(b)(1) of the Act, that changed circumstances exist sufficient to warrant revocation. For the foregoing reasons, and consistent with our determinations in *Ceramic Tile from Mexico,* 61 FR 6630 (Feb. 21, 1996) and *Leather Wearing Apparel from Mexico,* 61 FR 26163 (May 24, 1996), the Department preliminarily determines that there is a reasonable basis to believe that the requirement for revocation based upon the changed circumstances occasioned by the ruling in *Ceramica* has been met. Therefore, we are hereby notifying the public of our intent to amend our earlier revocation of the order on Cold-Rolled by changing the effective date from January 1, 1995 to September 20, 1991. For the orders on Wool, Leather, and OCTG from Argentina, we intend to revoke these measures effective September 20, 1991. If our final determination remains unchanged from this notice of intent, these revocations will apply to all unliquidated entries of subject merchandise entered or withdrawn from warehouse for consumption on or after September 20, 1991.

If final revocation occurs, we intend to instruct the U.S. Customs Service to terminate the suspension of liquidation and liquidate all unliquidated entries of the subject merchandise entered or withdrawn from warehouse for consumption on or after September 20, 1991, without regard to countervailing duties. We will also instruct the U.S. Customs Service to refund with interest any estimated countervailing duties collected with respect to those entries. We note that the requirements for a cash deposit of estimated countervailing duties were previously terminated in conjunction with the section 753 determination covering Cold-Rolled.

The current requirements for a cash deposit of estimated countervailing duties will continue until publication of the final results of these changed circumstances reviews.

Interested parties may request a hearing not later than 10 days after the date of publication of this notice and may submit written arguments in case briefs on these preliminary results within 21 days of the date of publication. Rebuttal briefs, limited to arguments raised in case briefs, may be submitted 7 days after the time limit for filing the case briefs. Parties must specify which of the four orders their comments or rebuttal briefs address. In addition, interested parties may only comment with respect to the order(s) for which they are interested parties; they may not submit comments for the other orders. Parties who submit arguments in this proceeding are requested to submit with the argument: (1) the name of the interested party on behalf of which the argument is submitted, (2) a statement of the issue, and (3) a brief summary of the argument. Copies of case briefs and rebuttal briefs must be served on interested parties in accordance with 19 C.F.R. § 355.38(e). The Department will publish the final results of these changed circumstance reviews and its final determination on revocation, including its analysis of issues raised in any case or rebuttal brief or at a hearing.

This notice is published in accordance with section 751(b)(1) of the Act (19 U.S.C. 1675(b)(1)) and 19 CFR 355.22(h).

Dated: April 25, 1997.

**Robert S. LaRussa,**

*Acting Assistant Secretary for Import Administration.*

**Appendix—Scope of the Reviews**

**I. OCTG From Argentina**

Imports covered by this review include shipments of Argentine OCTG. OCTG include hollow steel products of circular cross-section intended for use in the drilling of oil or gas and oil well casing, tubing and drill pipe or carbon or alloy steel, whether welded or seamless, manufactured to either American Petroleum Institute or proprietary specifications. The scope covers both finished and unfinished OCTG. The products covered in this review are provided for under item numbers of the *Harmonized Tariff Schedule* (HTS): 7304.20.20, 7304.20.40, 7304.20.50, 7304.20.60, 7304.20.80, 7304.39.00, 7304.51.50, 7304.20.70, 7304.59.60, 7304.59.80, 7304.90.70, 7305.20.40, 7305.20.60, 7305.20.80, 7305.31.40, 7305.31.60, 7305.39.10, 7305.39.50, 7305.90.10, 7305.90.50, 7306.20.20, 7306.20.30, 7306.20.40, 7306.20.60, 7306.20.80, 7306.30.50, 7306.50.50, 7306.60.70, 7306.90.10. The HTS subheadings are provided for convenience and Customs purposes. The written description remains dispositive.

**II. Wool From Argentina**

Imports covered by this review include shipments of Argentine wool finer than 44s and not on the skin. These products are provided for under HTS item numbers: 5101.11.60, 5101.19.60, 5101.21.40, and 5101.29.40. The HTS subheadings are provided for convenience and Customs purposes. The written description remains dispositive.

**III. Leather From Argentina**

Imports covered by this review include shipments of Argentine leather. The types of leather that are covered include bovine (excluding upper and lining leather not exceeding 28 square feet, buffalo leather, and upholstery leather), sheep (excluding vegetable pretanned sheep and lambskin leather), swine, reptile (excluding vegetable pretanned and not fancy reptile leather), patent leather, calf and kip patent laminated, and metalized leather. Leather is an animal skin that has been subjected to certain treatment to make it serviceable and resistant to decomposition. It is used in the footwear, clothing, furniture and other industries. The types of leather included within the scope are currently classified under HTS item numbers 4104.10.60, 4104.10.80, 4104.21.00, 4104.22.00, 4104.29.50, 4104.29.90, 4104.31.50, 4104.31.60, 4104.31.80, 4104.39.50, 4104.39.60, 4104.39.80, 4105.12.00, 4105.19.00, 4105.20.30, 4105.20.60, 4107.10.00, 4107.29.60, 4107.90.30, 4107.90.60, 4109.00.30, 4109.00.40, and 4109.00.70. The HTS subheadings are provided for convenience

and Customs purposes. The written description remains dispositive.

**IV. Cold-Rolled From Argentina**

Imports covered by this review include shipments of Argentine cold-rolled carbon steel flat products, whether or not corrugated or crimped; whether or not painted or varnished and whether or not pickled; not cut, not pressed, and not stamped to non-rectangular shape; not coated or plated with metal; over 12 inches in width and under 0.1875 inches in thickness whether or not in coils; as currently provided for under the following item numbers of the HTS: 7209.11.00, 7209.12.00, 7209.13.00, 7209.14.00, 7209.21.00, 7209.22.00, 7209.23.00, 7209.24.00, 7209.31.00, 7209.32.00, 7209.33.00, 7209.34.00, 7209.41.00, 7209.42.00, 7209.43.00, 7209.44.00, 7209.90.00, 7210.70.00, 7211.30.50, 7211.41.70, 7211.49.50, 7211.90.00, 7212.40.50. The HTS item numbers are provided for convenience and Customs purposes. The written description remains dispositive.

[FR Doc. 97–11459 Filed 5–1–97; 8:45 am]

BILLING CODE 3510–DS–P

## DEPARTMENT OF COMMERCE

### International Trade Administration

**[A–533–809]**

### Certain Forged Stainless Steel Flanges From India; Initiation of New Shipper Antidumping Duty Administrative Reveiw

**AGENCY:** Import Administration, International Trade Administration, Department of Commerce.

**ACTION:** Notice of Initiation of New Shipper Antidumping Duty Administrative Review.

**SUMMARY:** The Department of Commerce (''the Department'') has received a request to conduct a new shipper administrative review of the antidumping duty order on certain forged stainless steel flanges from India. In accordance with 19 CFR § 353.22(h), we are initiating this administrative review.

**EFFECTIVE DATE:** May 2, 1997.

**FOR FURTHER INFORMATION CONTACT:** Thomas Killiam or John Kugelman, Office of Antidumping/Countervailing Enforcement, Group III—Office 8, Import Administration, International Trade Administration, U.S. Department of Commerce, 14th Street and Constitution Avenue, NW., Washington, DC 20230, telephone: (202) 482–2704 or (202) 482–0649, respectively.

**APPLICABLE STATUTE AND REGULATIONS:** Unless otherwise indicated, all citations to the Tariff Act of 1930, as amended (''the Act''), refer to the provisions effective January 1, 1995, the effective date of the amendments made to the Act by the Uruguay Round Agreements Act. In addition, unless otherwise indicated, all citations to the Department's regulations are to the current regulations, as amended by the interim regulations published in the **Federal Register** on May 11, 1995 (60 FR 25130).

**SUPPLEMENTARY INFORMATION:**

#### Background

On February 24, 1997, the Department received a request, pursuant to section 751(a)(2)(B) of the Act and in accordance with 19 CFR § 353.22(h), for a new shipper review of the antidumping duty order on certain forged stainless steel flanges from India, which has a February anniversary date. The request for a new shipper review did not include the necessary certifications pursuant to 19 CFR § 353.22(h)(2). Pursuant to our instructions, Viraj supplemented its request on March 18 and April 1, 1997, to include the appropriate certifications.

#### Initiation of Review

In accordance with section 751(a)(2)(B) (ii) of the Act and 19 CFR § 353.22(h)(6), we are initiating a new shipper review of the antidumping duty order on certain forged stainless steel flanges from India. We intend to issue the final results of this review not later than 270 days from the date of publication of this notice.

| Antidumping duty proceeding | Period to be reviewed |
|---|---|
| India: | |
| Certain Forged Stainless Steel Flanges, A–533–809 | |
| Panchmahal Steels, Ltd. ..... | 02/01/96–01/31/97 |

We will instruct the U.S. Customs Service to allow, at the option of the importer, the posting, until the completion of the review, of a bond or security in lieu of a cash deposit for each entry of the merchandise exported by the above company, in accordance with 19 CFR § 353.22 (h)(4).

Interested parties must submit applications for disclosure under administrative protective orders in accordance with 19 CFR § 353.34(b).

Dated: April 25, 1997.

**Robert S. LaRussa,**

*Acting Assistant Secretary for Import Administration.*

[FR Doc. 97–11462 Filed 5–1–97; 8:45 am]

BILLING CODE 3510–DS–P

## DEPARTMENT OF DEFENSE

### Offfice of the Secretary

### Submission for OMB Review; Comment Request

**ACTION:** Notice.

The Department of Defense has submitted to OMB for clearance the following proposal for collection of information under the provisions of the Paperwork Reduction Act (44 U.S.C. Chapter 35).

*Title and Associated Form:* Army Delayed Entry Program (DEP) Survey (DEP—Loss Survey), OMB Number 0702–[to be determined].

*Type of Request:* New collection.

*Number of Respondents:* 1,105.

*Responses Per Respondent:* 1.

*Annual Responses:* 1,105.

*Average Burden Per Response:* 21 minutes.

*Annual Burden Hours:* 487.

*Needs and Uses:* The information obtained through this study will be used by the Army to provide insights into the Delayed Entry Program (DEP). The Army will use this information to develop strategies specifically designed for DEP participants to reduce the number of individuals dropping out of the DEP. The target respondent population is an Army recruit who contracted to join the Army, participated in the DEP, but who for whatever reason decided not to enlist in the Army.

*Affected Public:* Individuals or households.

*Frequency:* On occasion.

*Respondents Obligation:* Voluntary.

*OMB Desk Officer:* Mr. Edward C. Springer. Written comments and recommendations on the proposed information collection should be sent to Mr. Springer at the Office of Management and Budget, Desk Officer for DoD, Room 10236, New Executive Office Building, Washington, DC 20503.

*DOD Clearance Officer:* Mr. Robert Cushing. Written requests for copies of the information collection proposal should be sent to Mr. Cushing, WHS/DIOR, 1215 Jefferson Davis Highway, Suite 1204, Arlington, VA 22202–4302.

Dated: April 28, 1997.

**Patricia L. Toppings,**

*Alternate OSD Federal Register Liaison Officer, Department of Defense.*

[FR Doc. 97–11446 Filed 5–1–97; 8:45 am]

BILLING CODE 5000–04–M

## DEPARTMENT OF DEFENSE

### Department of the Air Force

### Notice of Public Hearings for the Enhanced Training in Idaho Proposal, Mountain Home Air Force Base, Idaho

The Bureau of Land Management (Department of the Interior) and the United States Air Force (Department of Defense) will convene public hearings in accordance with the Federal Land Policy and Management Act (FLPMA) and its associated regulations for public land withdrawals. The public will be given an opportunity to participate in informal discussions and/or provide statements in a public forum.

The Air Force proposes to develop a 12,000-acre tactical air-to-ground training range, 5 no-drop targets, 30 electronic emitter sites, and an associated road network, all of which would be located on federal and State of Idaho school endowment lands. For use of the federal lands, the Air Force proposes to obtain a withdrawal under the Engle Act and FLPMA for the larger portions and to obtain rights-of-way from the Bureau of Land Management for the smaller portions. For use of the state school endowment lands, the Air Force proposes to enter into lease agreements with the State of Idaho. Three alternatives are being considered for the 12,000-acre withdrawal. The alternatives include the same basic elements, varying in the locations of the tactical air-to-ground training range, the locations of the no-drop target areas, and the reconfiguration and expansion of the airspace. The No-Action alternative involves use of existing local and remote range assets at current levels.

The public hearings will be publicized in the local media and are scheduled from 6–10 pm for the following dates and locations:

June 3, 1997 (Tuesday) Mountain Home High School Auxiliary Gym and foyer, Mountain Home, ID.

June 4, 1997 (Wednesday) Grandview Elementary School Gym and foyer, Grandview, ID.

June 5, 1997(Thursday) College of Southern Idaho, Shilz Building Rooms 117 & 118, Twin Falls, ID.

June 6, 1997 (Friday) Three Creek School House, Three Creek, ID.

June 9, 1997 (Monday) Duck Valley Reservation Headquarters, Owyhee, NV.

June 12–13, 1997 (Thursday and Friday) Boise State University, Jordan Ballrooms B & C, Boise, ID.

Written comments on the proposal may be submitted at the hearings or directed to U.S. Air Force/Bureau of Land Management, PO Box 329, Boise, ID 83702–0329. For telephone inquiries, please contact Captain Melissa Miller, Chief, 366th Wing Public Affairs, (208) 828–6800.

**Carolyn A. Lunsford,**

*Air Force Federal Register Liaison Officer.*

[FR Doc. 97–11495 Filed 5–2–97; 8:45 am]

BILLING CODE 3910–01–P

---

## DEPARTMENT OF DEFENSE

### Department of the Air Force

### HQ USAF Scientific Advisory Board Meeting

The T&E Infrastructure Ad Hoc Study of the HQ USAF Scientific Advisory Board will meet on June 10–13, 1997, at Nellis AFB, NV; Kirtland AFB, NM; and Patrick AFB, FL from 8 a.m. to 5 p.m.

The purpose is to receive briefings and gather information on the Test & Evaluation Study.

The meetings will be closed to the public in accordance with Section 552b of Title 5, United States Code, specifically subparagraphs (1) and (4) thereof.

For further information, contact the HQ USAF Scientific Advisory Board Secretariat at (703) 697–8404.

**Carolyn A. Lunsford,**

*Air Force Federal Register Liaison Officer.*

[FR Doc. 97–11404 Filed 5–1–97; 8:45 am]

BILLING CODE 3910–01–P

---

## DEPARTMENT OF DEFENSE

### Department of the Air Force

### HQ USAF Scientific Advisory Board Meeting

The T&E Infrastructure Ad Hoc Study of the HQ USAF Scientific Advisory Board will meet on June 3–6, 1997, at Vandenberg AFB, CA and Edwards AFB, CA from 8 am to 5 pm.

The purpose is to receive briefings and gather information on the Test & Evaluation Study.

The meetings will be closed to the public in accordance with Section 552b of Title 5, United States Code, specifically subparagraphs (1) and (4) thereof.

For further information, contact the HQ USAF Scientific Advisory Board Secretariat at (703) 697–8404.

**Carolyn A. Lunsford,**

*Air Force Federal Register Liaison Officer.*

[FR Doc. 97–11405 Filed 5–1–97; 8:45 am]

BILLING CODE 3910–01–P

---

## DEPARTMENT OF DEFENSE

### Department of the Army

### Corps of Engineers

### Coastal Engineering Research Board (CERB)

**AGENCY:** U.S. Army Corps of Engineers, DoD.

**ACTION:** Notice of meeting.

**SUMMARY:** In accordance with Section 10(a)(2) of the Federal Advisory Committee Act (P.L. 92–463), announcement is made of the following committee meeting:

*Name of Committee:* Coastal Engineering Research Board (CERB).

*Dates of Meeting:* May 21–22, 1997.

*Place:* Holiday Inn Financial District, San Francisco, California.

*Time:* 1:00 p.m. to 5:00 p.m. (May 21, 1997)—8:00 a.m. to 5:00 p.m. (May 22, 1997).

**FOR FURTHER INFORMATION CONTACT:**

Inquiries and notice of intent to attend the meeting may be addressed to Colonel Bruce K. Howard, Executive Secretary, Coastal Engineering Research Board, U.S. Army Engineer Waterways Experiment Station, 3909 Halls Ferry Road, Vicksburg, Mississippi 39180–6199.

**SUPPLEMENTARY INFORMATION:**

*Proposed Agenda:* The 1998 Coastal Engineering Program Review is to be held May 21–22, 1997. On Wednesday afternoon, May 21, there will be remarks and a review of work units concerning the Coastal Inlets Research Program. On Thursday, May 22, a review of the Coastal Program work units concerning coastal navigation hydrodynamics, coastal sedimentation and dredging, and coastal structure evaluation and design, and Monitoring Completed Navigation Projects will be presented.

This meeting is open to the public, but since seating capacity of the meeting room is limited, advance notice of intent to attend, although not required, is requested in order to assure adequate arrangements for those wishing to attend.

**Bruce K. Howard,**

*Colonel, Corps of Engineers, Executive Secretary.*

[FR Doc. 97–11434 Filed 5–1–97; 8:45 am]

BILLING CODE 3710–PU–M

## DEPARTMENT OF EDUCATION

**[CFDA No. 84.305F, 84.306F, 84.307F, 84.308F, and 84.309F]**

### Office of Educational Research and Improvement—National Institutes' Field-Initiated Studies Grants Program (FIS)

**ACTION:** Application notice; correction.

**SUMMARY:** On March 20, 1997 a notice was published in the **Federal Register** (62 FR 13492–13494) inviting applications for new awards for fiscal year (FY) 1997 for this program. The purpose of this notice is to (1) correct CFDA numbers for two competitions; (2) clarify the Available Funds, Estimated Size of Awards, and Estimated Number of Awards; (3) correct an e-mail address; and (4) provide information concerning possible funding cycles for awards from the FY 1997 competition.

1. *CFDA Numbers.* Under the **SUMMARY** section (62 FR 13492, first column), the number at the end of paragraph ''3'' should be (84.308F) and the number at the end of paragraph ''4'' should be (84.307F).

2. *Clarification (62 FR 13492, third column).* The ''Estimated range of awards'' for FY 1997 FIS awards is $100,000—225,000 for *EACH* year.

The ''Estimated average size of awards'' is $150,000 for *EACH* year.

The ''Estimated number of awards'' is 7 for *EACH* Institute.

3. *E-mail address (62 FR 13494, third column).* The e-mail address should be (Delores__Monroe@ed.gov).

4. *Funding Cycles.* While it is the Department's intention to hold a Field Initiated Studies competition in FY 1998, it establishes the following funding cycle provision in the event that sufficient funds are not available to initiate a new competition in FY 1998. The Department may fund two cycles of awards from the FY 1997 Field Initiated Studies competition. Applications funded in the first cycle will be awarded in September 1997 from FY 1997 funds. A second cycle of applications may be funded early in FY 1998, pending the availability of FY 1998 funds, if the Secretary decides that there are applications of sufficiently high quality to merit funding.

**Note:** The Department is not bound by any estimates in this notice.

**FOR FURTHER INFORMATION CONTACT:** The address and telephone number for requesting an application or obtaining further information about individual institutes are listed in 62 FR 13493–13494 under the section ''Institute Mission Statements.'' Individuals who use a telecommunications device for the deaf (TDD) may call the Federal Information Relay Service (FIRS) at 1–800–877–3939 between 8 a.m. and 8 p.m., Eastern time, Monday through Friday.

**Program Authority:** 20 U.S.C. 6031(c)(2)(B).

Dated: April 28, 1997.

**Ramon C. Cortines,**

*Acting Assistant Secretary for Educational Research and Improvement.*

[FR Doc. 97–11415 Filed 5–1–97; 8:45 am]

BILLING CODE 4000–01–P

## DEPARTMENT OF EDUCATION

### National Assessment Governing Board; Meeting

**AGENCY:** National Assessment Governing Board.

**ACTION:** Amendment to notice of a partially closed meeting.

**SUMMARY:** This amends the notice of a partially closed meeting of the National Assessment Governing Board published on Friday, April, 25, 1997 in Vol. 62, No. 80, page 20160. On May 8, 1997, the Achievement Levels Committee will meet in partially closed session from 4:00–5:00 p.m. The Committee will continue discussion of the results of the current 1996 science level-setting activities and review the analysis of data and the proposed exemplar items. This meeting must be conducted in closed session because reference will be made to specific items from the assessment and premature disclosure of the information presented for review would be likely to significantly frustrate implementation of a proposed agency action. Such matters are protected by exemption (9)(B) of Section 552b(c) of Title 5 U.S.C. On May 9, 1997, between 1:00–1:45 p.m., the full Board will meet in closed session to hear a briefing on he 1996 science level-setting activities. This part of the meeting must be conducted in closed session because references will be made to specific items from the assessment and premature disclosure of the information presented for review would be likely to significantly frustrate implementation of a proposed agency action. Such matters are protected by exemption (9)(B) of Section 552b(c) of Title 5 U.S.C. The public is being given less than fifteen days notice of these closed meetings because advice from consultants that bears on the subject matter of these meetings described above came too late to be considered in the preparation of the original notice.

Dated: April 28, 1997.

**Roy Truby,**

*Executive Director, NAGB.*

[FR Doc. 97–11430 Filed 5–1–97; 8:45 am]

BILLING CODE 4000–01–M

## DEPARTMENT OF EDUCATION

### Submission of Data by State Educational Agencies

**AGENCY:** Department of Education.

**ACTION:** Notice of dates of submission of state revenue and expenditure reports for fiscal year 1996 and of revisions to those reports.

**SUMMARY:** The Secretary of Education announces dates for the submission by state educational agencies (SEAs) of expenditure and revenue data and average daily attendance statistics on ED-Form 2447 for fiscal year (FY) 1996. The Secretary sets these dates to ensure that data are available to serve as the basis for timely distribution of Federal funds. The U.S. Bureau of the Census is the data collection agent for the Department's National Center for Education Statistics (NCES). The data will be published by NCES and will be used by the Secretary in the calculation of allocations for FY 1998 appropriated funds.

**DATES:** The date on which submissions were first accepted was March 15, 1997. The mandatory deadline for the final submission of all data, including any revisions to previously submitted data, is September 2, 1997.

**ADDRESSES:** SEAs may mail ED-Form 2447 (The National Public Education Financial Survey—Fiscal Year 1996) to: Bureau of the Census, *Attention:* Governments Division, Washington, DC 20233–6800.

Alternatively, SEAs may hand deliver submissions to: Governments Division, Bureau of the Census, 8905 Presidential Parkway, Washington Plaza II, Room 508, Upper Marlboro, MD 20772, by 4 p.m. (Eastern Time).

If an SEA's submission is received by the Bureau of the Census after September 2, in order for the submission to be accepted, the SEA must show one of the following as proof that the submission was mailed on or before the mandatory deadline date:

1. A legibly dated U.S. Postal Service postmark.

2. A legible mail receipt with the date of mailing stamped by the U.S. Postal Service.

3. A dated shipping label, invoice, or receipt from a commercial carrier.

4. Any other proof of mailing acceptable to the Secretary.

If the SEA mails ED Form 2447 through the U.S. Postal Service, the Secretary does not accept either of the following as proof of mailing:

1. A private metered postmark.
2. A mail receipt that is not dated by the U.S. Postal Service.

**Note:** The U.S. Postal Service does not uniformly provide a dated postmark. Before relying on this method, an SEA should check with its local post office.

**FOR FURTHER INFORMATION CONTACT:** Mr. Lawrence R. MacDonald, Chief, Governments Division, at the Maryland address specified above or by telephone: (301) 457–1574. Individuals who use a telecommunications device for the deaf (TDD) may call the Federal Information Relay Service (FIRS) at 1–800–877–8339 between 8 a.m. and 8 p.m., Eastern time, Monday through Friday.

**SUPPLEMENTARY INFORMATION:** Under the authority of section 404(a) of the National Education Statistics Act of 1994 (20 U.S.C. 9003(a)), which authorizes NCES to gather data on the financing of education, NCES collects data annually from SEAs through ED Form 2447. The report from SEAs includes attendance, revenue and expenditure data from which NCES determines the average state per pupil expenditure (SPPE) for elementary and secondary education.

In addition to using the SPPE data as useful information on the financing of elementary and secondary education, the Secretary uses these data directly in calculating allocations for certain formula grant programs, including Title 1 of the Elementary and Secondary Education Act of 1965 as amended by the Improving America's Schools Act of 1994 (Title I), Impact Aid, and Indian Education. Other programs such as the Education for Homeless Children and Youth Program under Title VII of the Stewart B. McKinney Homeless Assistance Act, the Dwight D. Eisenhower Professional Development Program, and the Safe and Drug-Free Schools and Communities Program make use of SPPE data indirectly because their formulas are based, in whole or in part, on State Title I allocations.

In February 1997, the Bureau of the Census, acting as the data collection agent for NCES, mailed to SEAs ED Form 2447 with instructions and requested that SEAs submit data to the Bureau of the Census on March 15, 1997, or as soon as possible thereafter. SEAs were urged to submit accurate and complete data on March 15, or as soon as possible thereafter, to facilitate timely processing. Submissions by SEAs to the Bureau of the Census are checked for accuracy and returned to each SEA for verification. All data, including any revisions, must be submitted to the Bureau of the Census by an SEA not later than September 2, 1997.

Having accurate information, on time, is critical to an efficient and fair allocation process, as well as the NCES statistical process. To ensure timely distribution of Federal education funds based on the best, most accurate data available, NCES establishes, for allocation purposes, September 2, 1997, as the final date by which ED Form 2447 must be submitted. However, if an SEA submits revised data after the final deadline that results in a lower SPPE figure, its allocations may be adjusted downward or the Department may request the SEA to return funds. SEAs should be aware that all of these data are subject to audit and that, if any inaccuracies are discovered in the audit process, the Department may seek recovery of overpayments for the applicable programs. If an SEA submits revised data after September 2, the data may also be too late to be included in the final NCES published dataset.

**Authority:** 20 U.S.C. 9003(a).

Dated: April 28, 1997.

**Ramon C. Cortines,**

*Acting Assistant Secretary for Educational Research and Improvement.*

[FR Doc. 97–11416 Filed 5–1–97; 8:45 am]

BILLING CODE 4000–01–P

## DEPARTMENT OF ENERGY

### Program Opportunity Notice: Unrestricted Eligibility for Advanced Diagnostics Tests in Priority Basins

**AGENCY:** U.S. Department of Energy (DOE), Federal Energy Technology Center (FETC).

**ACTION:** Program Opportunity Notice (PON).

**SUMMARY:** The Department of Energy announces that it intends to conduct a competitive Solicitation and award financial assistance (cooperative agreement[s]) in support of a demonstration program for testing one or more Exploration and Production (E&P) technologies in a well of opportunity in one or more tight gas fractured reservoirs in one or more priority basins. The project effort[s] require fifty percent [50.0%] cost participation, with the Government funding *only* the costs of the technology being tested. Applications will be subjected to a technical merit review by a DOE technical panel, and awards will be made to a limited number of applicants on the basis of the scientific merit of the application and the availability of funds.

**FOR FURTHER INFORMATION CONTACT:** Mary Beth J. Pearse, U.S. Department of Energy, Federal Energy Technology Center, Acquisition and Assistance Division, P.O. Box 10940, MS 921–143, Pittsburgh, PA 15236–0940, Internet e-mail to pearse@fetc.doe.gov, or FAX to (412) 892–6216. Solicitation DE–PN26–97FT34181 is expected to be released on or about May 5, 1997 with the expected closing date for submission of proposals on June 5, 1997. This solicitation will only be available via internet and will not be distributed in paper form. The solicitation will be accessible as a Word Perfect 6.1 (Windows) document or in the Portable Document Format (PDF), on the World Wide Web (WWW) at http://www.petc.doe.gov/business.html (select ''solicitations''). Those who obtain a copy of the solicitation through the WWW should check the location frequently for any amendments. Additional information on this solicitation's requirements can be found on the PETC Home Page at http://www.petc.doe.gov/business.html [select ''solicitations''], PON DE–PN26–97FT34181, entitled ''Advanced Diagnostics Tests in Priority Basins.'' All inquiries regarding this solicitation should be directed to the Point-of-Contact, Mary Beth J. Pearse, as stated in this section.

**SUPPLEMENTARY INFORMATION:**

*Title of Solicitation:* ''Advanced Diagnostics Tests in Priority Basins''.

*Objectives:* Through Program Opportunity Notice (PON) No. DE-PN26-97FT34181, the Department of Energy seeks applications that will ultimately reduce the technical risks and the economic uncertainty standing in the way of increased industry development of the low permeabliity (tight) gas resources of the Rocky Mountain and Mid-Continent gas basins. This will be done by demonstrating increased efficiency through field tests of improved or emerging E&P technologies. The goal is to encourage development of the tight gas resources by industry through testing E&P technologies in priority tight gas basins.

*Eligibility:* Eligibility for participation in this solicitation is unrestricted. All responsible individuals, corporations, non-profit organizations, educational institutions, and state or local governments may submit proposals for consideration.

*Awards:* DOE anticipates issuing one [1] to three [3] financial assistance [cooperative agreement] fifty percent

[50.0%] cost participation awards. DOE reserves the right to support or not support any or all applications received in whole or in part, and to determine how many awards may be made through the solicitation subject to funds available in this fiscal year. Approximately $1,198,000.00 is planned for this solicitation. The total should provide support for approximately one [1] to three [3] demonstration application selections.

*Solicitation Release Date:* The Program Solicitation is expected to be ready for release on or about May 5, 1997. Applications must be prepared and submitted in accordance with the instructions and forms contained in the Program Solicitation. To be eligible, applications must be submitted to the designated DOE office by the closing date specified in the Program Solicitation (anticipated to be on or about June 5, 1997).

**Richard D. Rogus,**

*Contracting Officer, Acquisition and Assistance Division.*

[FR Doc. 97–11448 Filed 5–1–97; 8:45 am]

BILLING CODE 6450–01–P

---

## DEPARTMENT OF ENERGY

### Federal Energy Regulatory Commission

**[Docket No. CP94–161–007]**

### Avoca Natural Gas Storage; Notice of Amendment and Notice of Extension of Time To File Comments on Notice of Intent to Prepare an Environmental Assessment for the Proposed Avoca Gas Storage Project Supplement

April 28, 1997.

Take notice that on April 14, 1997, Avoca Natural Gas Storage (Avoca), One Bowdoin Square, Boston, Massachusetts 02114, filed in Docket No. CP94–161–007, pursuant to Section 7(c) of the Natural Gas Act, significant project alterations which the Commission construes as an amendment to its pending amendment filed in Docket No. CP94–161–006, requesting modifications to its proposal to construct a brine pipeline, all as more fully set forth in the amendment which is on file with the Commission and open to public inspection. In addition, in response to several requests, the Commission will extend the period for making environmental comments on the Notice of Intent to Prepare an Environmental Assessment for the Proposed Avoca Gas Storage Project Supplement and Request for Comments on Environmental Issues (NOI).

Specifically, Avoca seeks to make the following alterations to its pending filing in Docket No. CP94–161–006:

- eliminate the 42.4 mile, 6-inch-diameter residual water return line and the residual water tank at the Akzo Nobel Salt Company (Akzo);
- deliver brine to Akzos brine field north of Akzos plant rather than directly to the plant which would result in the elimination of 1 mile of the 8-inch-diameter brine pipeline between mileposts (MP) 4.5C and 5.5C and rerouting about 1,500 feet of the brine pipeline from about MP 4.5C northward to Akzos brine field;
- construct a brine storage tank at Akzos brine field rather than within the Akzo plant yard;
- modify the 8-inch-diameter pipeline route between MPs 3.46C and 3.77C from 25 feet to the east of the Seneca West pipeline to 25 feet to the west of New York State Electric and Gas Corporations (NYSEG) Seneca West pipeline;
- modify the 10-inch-diameter pipeline route between MP 14.48 and 14.80 to follow the edge of a landowners field rather than diagonally cutting across the field (at the request of the landowner and the New York State Department of Agriculture and Markets):
- modify the 6-inch-diameter pipeline route into the Cargill, Inc. (Cargill) plant from MP 39.50 to MP 39.73 (at the landowners request) to a location that would follow a railroad spur and enter Cargill about 200 feet west of the originally proposed route;
- modify the 10-inch-diameter pipeline route between MPs 34.84 and 35.56 so that it would be 25 feet east of the Texas Eastern Products Pipeline Corporation (TEPPCO) pipeline rather than 25 feet east of the Seneca West pipeline;
- directionally drill the crossing of Hamilton Creek (MP 35.31); and
- add an access road at MP 37.24 that was omitted from the application.

Avoca has also indicated that Cargill would need to construct facilities to accept brine from Avoca within its existing facility. These facilities would include:

- pipeline with a three-valve manifold and associated valves, controls, and equipment to tie-in to existing piping; and
- heat exchange equipment to meet temperature specifications for salt processing.

Seneca Lake Pure Waters Associations Inc., Schuyler County Environmental Management Council, Schuyler County Soil & Water Conservation District, Barbara J. Halpin of the Schuyler County Legislature, Kevin Hughey, and John H. and Deborah G. Ball have requested that the Commission extend the period for public comment on environmental issues pursuant to the NOI issued on March 10, 1997. The parties contend that more time is needed to evaluate the project. Upon consideration, the Commission will extend the comment period for the NOI until May 19, 1997.

Any person desiring to be heard or to make any protest with reference to said amendment should on or before May 19, 1997, file with the Federal Energy Regulatory Commission, 888 First Street, NE, Washington, D.C. 20426, its comments on environmental issues, or a motion to intervene or a protest in accordance with the requirements of the Commission's Rules of Practice and Procedure (18 CFR 385.214 or 385.211) and the Regulations under the Natural Gas Act (18 CFR 157.10). All protests filed with the Commission will be considered by it in determining the appropriate action to be taken but will not serve to make the protestants parties to the proceeding. Any person wishing to become a party to a proceeding or to participate as a party in any hearing therein must file a motion to intervene in accordance with the Commission's Rules.

Take further notice that, pursuant to the authority contained in and subject to jurisdiction conferred upon the Federal Energy Regulatory Commission by Sections 7 and 15 of the Natural Gas Act and the Commission's Rules of Practice and Procedure, a hearing will be held without further notice before the Commission or its designee on this amendment if no motion to intervene is filed within the time required herein, if the Commission on its own review of the matter finds that a grant of the certificate is required by the public convenience and necessity. If a motion for leave to intervene is timely filed, or if the Commission on its own motion believes that a formal hearing is required, further notice of such hearing will be duly given.

Under the procedure herein provided for, unless otherwise advised, it will be unnecessary for Avoca to appear or be represented at the hearing.

**Lois D. Cashell,**

*Secretary.*

[FR Doc. 97–11397 Filed 5–1–97; 8:45 am]

BILLING CODE 6717–01–M

## DEPARTMENT OF ENERGY

### Federal Energy Regulatory Commission

**[Docket No. RP97–37–002]**

### Canyon Creek Compression Company; Notice of Compliance Filing

April 28, 1997.

Take notice that on April 24, 1997, Canyon Creek Compression Company (Canyon) tendered for filing as part of its FERC Gas Tariff, Third Revised Volume No. 1, Second Substitute First Revised Sheet No. 132, to be effective December 1, 1996.

Canyon states that the purpose of the filing is to comply with the Commission's Letter Order issued on March 25, 1997, in Docket No. RP97–37–000, which required Canyon to revise Section 13.6 of the General Terms and Conditions of its Tariff to be consistent with the policy enunciated in Southern Natural Gas Company, 69 FERC ¶ 61,093 (1994), as to the discounting sequence for interruptible rates.

Canyon states that copies of the filing are being mailed to its jurisdictional customers, interested state commissions, and all parties on the official service list in Docket No. RP97–37–000.

Any person desiring to protest said filing should file a protest with the Federal Energy Regulatory Commission, 888 First Street, NE., Washington, D.C. 20426, in accordance with Section 385.211 of the Commission's Rules and Regulations. All such protests must be filed as provided in Section 154.210 of the Commission's Regulations. Protests will be considered by the Commission in determining the appropriate action to be taken, but will not serve to make protestants parties to the proceeding. Copies of this filing are on file with the Commission and are available for public inspection in the Public Reference Room.

**Lois D. Cashell,**

*Secretary.*

[FR Doc. 97–11409 Filed 5–1–97; 8:45 am]

BILLING CODE 6717–01–M

## DEPARTMENT OF ENERGY

### Federal Energy Regulatory Commission

**[Docket No. RP97–287–001]**

### El Paso Natural Gas Company; Notice of Proposed Changes in FERC Gas Tariff

April 28, 1997.

Take notice that on April 23, 1997, El Paso Natural Gas Company (El Paso) tendered for filing to become part its FERC Gas Tariff, Second Revised Volume No. 1–A, the following tariff sheets to become effective May 1, 1997:

Fifth Revised Sheet No. 30
Fourth Revised Sheet No. 31

El Paso states that the above tariff sheets are being filed to implement a negotiated rate contract pursuant to the Commission's Statement of Policy on Alternatives to Traditional Cost-of-Service Ratemaking for Natural Gas Pipelines and Regulation of Negotiated Transportation Services of Natural Gas Pipelines issued January 31, 1996 at Docket Nos. RM95–6–000 and RM96–7–000.

Any person desiring to protest said filing should file a protest with the Federal Energy Regulatory Commission, 888 First Street, N.E., Washington, D.C. 20426, in accordance with Sections 385.211 of the Commissions Rules and Regulations. All such protests must be filed in accordance with Section 154.210 of the Commission's Regulations. Protests will be considered by the Commission in determining the appropriate action to be taken, but will not serve to make protestants parties to the proceeding. Copies of this filing are on file with the Commission and are available for public inspection in the Public Reference Room.

**Lois D. Cashell,**

*Secretary.*

[FR Doc. 97–11418 Filed 5–1–97; 8:45 am]

BILLING CODE 6717–01–M

## DEPARTMENT OF ENERGY

### Federal Energy Regulatory Commission

**[Docket No. RP97–142–002]**

### KN Interstate Gas Transmission Co.; Notice of Tariff Filing

April 28, 1997.

On April 17, 1997, KN Interstate Gas Transmission Co. (KNI) tendered for filing tariff sheets in Docket No. RP97–142–000 to comply with Commission Order Nos. 587 and 587–B. By mistake, KNI labeled its tariff sheets for Volume No. 1–D of its FERC Gas Tariff as ''Third Revised'' rather than ''First Revised''.

Take notice that on April 24, 1997, KNI tendered for filing corrected sheets of KNI's Volume No. 1–D properly labeled as ''First Revised'' and, pursuant to Section 154.4 of the Commission's regulations, an electronic diskette containing the corrected sheets.

Any person desiring to protest with reference to this filing should file a protest with the Federal Energy Regulatory Commission, 888 First Street N.E., Washington, D.C. 20426, in accordance with 18 CFR 385.211 of the Commission's Rules of Practice and Procedure. All such protests must be filed as provided in Section 154.210 of the Commission's Regulations. Protests filed with the Commission will be considered by it in determining the appropriate action to be taken, but will not serve to make the protestants parties to the proceeding. Copies of this filing are on file with the Commission and are available for public inspection.

**Lois D. Cashell,**

*Secretary.*

[FR Doc. 97–11417 Filed 5–1–97; 8:45 am]

BILLING CODE 6717–01–M

## DEPARTMENT OF ENERGY

### Federal Energy Regulatory Commission

**[Docket No. EG97–54–000, et al.]**

### Kohinoor Energy Limited, et al.; Electric Rate and Corporate Regulation Filings

April 24, 1997.

Take notice that the following filings have been made with the Commission:

#### 1. Kohinoor Energy Limited

[Docket No. EG97–54–000]

On April 14, 1997, Kohinoor Energy Limited (KEL) filed with the Federal Energy Regulatory Commission (Commission) an application for determination of exempt wholesale generator status pursuant to Part 365 of the Commission's Regulations.

KEL is a Pakistani corporation which is sponsored by Saigols Group of Companies and co-sponsored by Tomen Corporation, Wartsila Diesel Oy, Prudential Overseas Holdings Corporation and International Finance Corporation. KEL's facility is a 131.4-MW gross capacity, 120-MW net capacity, oil-fired generating plant located on Ejtimaa Road, 33 kilometers from Lahore, in Pakistan. KEL states that no rate or charge in connection with this

facility was in effect under the laws of any state as of October 24, 1992 or any time thereafter. KEL further states that copies of the application were served upon the Securities and Exchange Commission.

*Comment date:* May 9, 1997, in accordance with Standard Paragraph E at the end of this notice. The Commission will limit its consideration of comments to those that concern the adequacy or accuracy of the application.

**2. Commonwealth Edison Company**

[Docket No. ER97–2487–000]

Take notice that on April 8, 1997, Commonwealth Edison Company (Edison) submitted Amendment No. 6 to the Interconnection Agreement between Edison and Iowa-Illinois Gas and Electric Company, predecessor by merger of MidAmerican Energy Company (MidAmerican). Amendment No. 6 eliminates certain service schedules that provide services redundant to those obtained through Edison's and MidAmerican's unbundled power sales and open-access transmission tariffs. The Commission has previously designated the Interconnection Agreement as Edison's FERC Rate Schedule No. 9.

Edison requests an effective date of December 31, 1996 for Amendment No. 6, and accordingly seeks waiver of the Commission's requirements. Copies of this filing were served upon MidAmerican, the Illinos Commerce Commission, and the Iowa Utilities Board.

*Comment date:* May 8, 1997, in accordance with Standard Paragraph E at the end of this notice.

**3. R.J. Dahnk & Associates, Calpine Power Services, Co., Market Responsive Energy, Inc., and Monterey Consulting Associates, Inc.**

[Docket Nos. ER94–1352–010, ER94–1545–009, ER95–1295–003, and ER96–2143–002 (not consolidated)]

Take notice that the following informational filings have been made with the Commission and are on file and available for inspection and copying in the Commission's Public Reference Room:

On March 11, 1997, R.J. Dahnk & Associates filed certain information as required by the Commission's August 10, 1994, order in Docket No. ER94–1352–000.

On April 1, 1997, Calpine Power Services, Company filed certain information as required by the Commission's March 9, 1995, order in Docket No. ER94–1545–000.

On March 20, 1997, Market Responsive Energy, Inc. filed certain information as required by the Commission's December 20, 1995, order in Docket No. ER95–1295–000.

On February 6, 1997, Monterey Consulting Associates, Inc. filed certain information as required by the Commission's August 8, 1996, order in Docket No. ER96–2143–000.

**4. Kansas City Power & Light Company**

[Docket No. ER97–2466–000]

Take notice that on April 9, 1997, Kansas City Power & Light Company (KCPL) tendered for filing a Service Agreement dated March 2, 1997, between KCPL and Entergy Power Marketing, Corp. (Entergy). KCPL proposes an effective date of March 17, 1997, and requests waiver of the Commission's notice requirement. This Agreement provides for the rates and charges for Non-Firm Transmission Service between KCPL and Citizens.

In its filing, KCPL states that the rates included in the above-mentioned Service Agreement are KCPL's rates and charges in the compliance filing to FERC Order No. 888 in Docket No. OA96–4–000.

*Comment date:* May 8, 1997, in accordance with Standard Paragraph E at the end of this notice.

**5. Ohio Edison Company, Pennsylvania Power Company**

[Docket No. ER97–2467–000]

Take notice that on April 9, 1997, Ohio Edison Company tendered for filing on behalf of itself and Pennsylvania Power Company, a Service Agreement for Non-Firm Point-to-Point Transmission Service with Sonat Power Marketing, L.P., and Ohio Edison Company pursuant to Ohio Edison's Open Access Tariff. This Service Agreement will enable the parties to obtain Non-Firm Point-to-Point Transmission Service in accordance with the terms of the Tariff.

*Comment date:* May 8, 1997, in accordance with Standard Paragraph E at the end of this notice.

**6. Carolina Power & Light Company**

[Docket No. ER97–2468–000]

Take notice that on April 9, 1997, Carolina Power & Light Company (CP&L), tendered for filing separate Service Agreements for Non-Firm Point to Point Transmission Service executed between CP&L and the following Eligible Transmission Customers: AYP Energy, Inc.; and Delmarva Power & Light Company. Service to each Eligible Customer will be in accordance with the terms and conditions of Carolina Power & Light Company's Open Access Transmission Tariff.

Copies of the filing were served upon the North Carolina Utilities Commission and the South Carolina Public Service Commission.

*Comment date:* May 8, 1997, in accordance with Standard Paragraph E at the end of this notice.

**7. Delmarva Power & Light Company**

[Docket No. ER97–2469–000]

Take notice that on April 9, 1997, Delmarva Power & Light Company (Delmarva), tendered for filing service agreements providing for firm point-to-point transmission service to Duke/Louis Dreyfus pursuant to Delmarva's open access transmission tariff.

Delmarva states that a copy of the filing was provided to Duke/Louis Dreyfus.

*Comment date:* May 8, 1997, in accordance with Standard Paragraph E at the end of this notice.

**8. Pacific Gas and Electric Company**

[Docket No. ER97–2470–000]

Take notice that on April 9, 1997, Pacific Gas and Electric Company (PG&E) tendered for filing three Service Agreements between PG&E and: (1) Arizona Public Service Company (APS); (2) Williams Energy Services Company (Williams); and (3) Idaho Power Company (Idaho); each entitled, ''Service Agreement for Non-Firm Point-to-Point Transmission Service'' (Service Agreements).

PG&E proposes that the Service Agreements become effective retroactively on February 3, 1997 for APS and Williams and February 28, 1997 for Idaho. PG&E is requesting any necessary waivers.

Copies of this filing have been served upon the California Public Utilities Commission, APS, Williams and Idaho.

*Comment date:* May 8, 1997, in accordance with Standard Paragraph E at the end of this notice.

**9. Pacific Gas and Electric Company**

[Docket No. ER97–2471–000]

Take notice that on April 9, 1997, Pacific Gas and Electric Company (PG&E), tendered for filing three Service Agreements between PG&E and; (1) Southern Energy Trading and Marketing, Inc. (Southern); (2) Bonneville Power Administration Power Business (Bonneville) and (3) AIG Trading Corporation (AIG Trading); each entitled, ''Service Agreement for Non-Firm Point-to-Point Transmission Service'' (Service Agreements).

PG&E proposes that the Service Agreements become effective on March 12, 1997 for Southern and Bonneville and March 14, 1997 for AIG Trading.

PG&E is requesting any necessary waivers. Copies of this filing have been served upon the California Public Utilities Commission, Southern, Bonneville and AIG Trading.

*Comment date:* May 8, 1997, in accordance with Standard Paragraph E at the end of this notice.

**10. Oklahoma Gas and Electric Company**

[Docket No. ER97–2472–000]

Take notice that on April 9, 1997, Oklahoma Gas and Electric Company (OG&E), tendered for filing service agreements for parties to take service under its open access tariff.

Copies of this filing have been served on each of the affected parties, the Oklahoma Corporation Commission and the Arkansas Public Service Commission.

*Comment date:* May 8, 1997, in accordance with Standard Paragraph E at the end of this notice.

**11. Deseret Generation & Transmission Cooperative**

[Docket No. ER97–2474–000]

Take notice that on April 9, 1997, Deseret Generation & Transmission Cooperative (Deseret), tendered for filing a Notice of Cancellation of Deseret's FERC Rate Schedule No. 4 between Deseret and the Department of Water & Power of the City of Los Angeles.

Deseret requests that this cancellation become effective June 2, 1997.

*Comment date:* May 8, 1997, in accordance with Standard Paragraph E at the end of this notice.

**12. PacifiCorp**

[Docket No. ER97–2476–000]

Take notice that PacifiCorp on April 10, 1997, tendered for filing in accordance with 18 CFR Part 35 of the Commission's Rules and Regulations, a Service Agreement with Wisconsin Electric Power Company under PacifiCorp's FERC Electric Tariff, Fourth Revised Volume No. 3. Copies of this filing were supplied to the Washington Utilities and Transportation Commission and the Public Utility Commission of Oregon.

*Comment date:* May 8, 1997, in accordance with Standard Paragraph E at the end of this notice.

**13. Kansas City Power & Light Company**

[Docket No. ER97–2477–000]

Take notice that on April 10, 1997, Kansas City Power & Light Company (KCPL) tendered for filing a Service Agreement dated March 6, 1997, between KCPL and LG&E Power Marketing (LG&E). KCPL proposes an effective date of March 17, 1997, and requests waiver of the Commission's notice requirement. This Agreement provides for the rates and charges for Non-Firm Transmission Service between KCPL and Citizens.

In its filing, KCPL states that the rates included in the above-mentioned Service Agreement are KCPL's rates and charges in the compliance filing to FERC Order No. 888 in Docket No. OA96–4–000.

*Comment date:* May 8, 1997, in accordance with Standard Paragraph E at the end of this notice.

**14. Western Resources, Inc.**

[Docket No. ER97–2479–000]

Take notice that on April 10, 1997, Western Resources, Inc. tendered for filing a non-firm transmission agreement between Western Resources and The Power Company of America, L.P. Western Resources states that the purpose of the agreement is to permit non-discriminatory access to the transmission facilities owned or controlled by Western Resources in accordance with Western Resources open access transmission tariff on file with the Commission. The agreement is proposed to become effective April 1, 1997.

Copies of the filing were served upon The Power Company of America and the Kansas Corporation Commission.

*Comment date:* May 8, 1997, in accordance with Standard Paragraph E at the end of this notice.

**15. Duquesne Light Company**

[Docket No. ER97–2480–000]

Take notice that on April 10, 1997 , Duquesne Light Company (DLC) filed a Service Agreement dated April 7, 1997 with Carolina Power & Light Company under DLC's Open Access Transmission Tariff (Tariff). The Service Agreement adds Carolina Power & Light Company as a customer under the Tariff. DLC requests an effective date of April 7, 1997 for the Service Agreement.

*Comment date:* May 8, 1997, in accordance with Standard Paragraph E at the end of this notice.

**16. Duquesne Light Company**

[Docket No. ER97–2481–000]

Take notice that on April 10, 1997, Duquesne Light Company (DLC) filed a Service Agreement dated April 7, 1997 with Wisconsin Electric Power Company under DLC's FERC Coordination Sales Tariff (Tariff). The Service Agreement adds Wisconsin Electric Power Company as a customer under the Tariff. DLC requests an effective date of April 7, 1997, for the Service Agreement.

*Comment date:* May 8, 1997, in accordance with Standard Paragraph E at the end of this notice.

**17. Duquesne Light Company**

[Docket No. ER97–2482–000]

Take notice that on April 10, 1997 , Duquesne Light Company (''DLC'') filed a Service Agreement dated April 7, 1997 with Citizens Lehman Power Sales under DLC's Open Access Transmission Tariff (''Tariff''). The Service Agreement adds Citizens Lehman Power Sales as a customer under the Tariff. DLC requests an effective date of April 7, 1997 for the Service Agreement.

*Comment date:* May 8, 1997, in accordance with Standard Paragraph E at the end of this notice.

**18. Nantahala Power and Light Company**

[Docket No. ER97–2486–000]

Take notice that on April 3, 1997, Nantahala Power and Light Company (Nantahala) tendered for filing a proposed Supplement to its Rate Schedule FERC No. 6, an Agreement to Amend COSAC Agreements between Nantahala, the Town of Highlands, NC, North Carolina Electric Membership Corporation and Western Carolina University.

Copies of this filing have been sent to the Town of Highlands, NC, North Carolina Electric Membership Corporation, Western Carolina University and the North Carolina Utilities Commission.

*Comment date:* May 8, 1997, in accordance with Standard Paragraph E at the end of this notice.

**19. American Electric Power Service Corporation**

[Docket No. ER97–2488–000]

Take notice that on April 8, 1997, the American Electric Power Service Corporation (AEPSC) tendered for filing executed service agreements under the AEP Companies' Point-to-Point Transmission Service Tariffs. The Transmission Tariff has been designated as FERC Electric Tariff Original Volume No. 4, effective July 9, 1996. AEPSC requests waiver of notice to permit the Service Agreements to be made effective for service billed on and after March 15, 1997.

A copy of the filing was served upon the Parties and the State Utility Regulatory Commissions of Indiana, Kentucky, Michigan, Ohio, Tennessee, Virginia and West Virginia.

*Comment date:* May 8, 1997, in accordance with Standard Paragraph E at the end of this notice.

**20. Alabama Power Company**

[Docket No. ER97–2489–000]

Take notice that on April 8, 1997, Alabama Power Company (APCo) tendered for filing an amendment to the Interconnection Agreement between APCo and Alabama Electric Cooperative, Inc. (AEC). The purpose of this filing is to reflect AEC's responsibility (under the Network Service Agreement pending in Docket No. TX95–5–000) for scheduling the delivery of SEPA capacity and energy to SEPA's preference customers located in Alabama that are members of AEC. The amendment is to be given the same effective date as that Network Service Agreement.

*Comment date:* May 8, 1997, in accordance with Standard Paragraph E at the end of this notice.

**21. Central Hudson Gas & Electric Corporation**

[Docket No. ER97–2490–000]

Take notice that Central Hudson Gas and Electric Corporation (Central Hudson) on April 9, 1997, tendered for filing its development of actual costs for 1996 related to transmission service provided from the Roseton Generating Plant to Consolidated Edison Company of New York, Inc. (Con Edison) and Niagara Mohawk Power Corporation (Niagara Mohawk) in accordance with the provisions of its Rate Schedule FERC No. 42.

The actual costs for 1996 amounted to $0.9852 per Mw.-day to Con Edison and $3.4346 per Mw.-day to Niagara Mohawk and are the basis on which charges for 1997 have been estimated.

Central Hudson requests waiver on the notice requirements set forth in 18 CFR 35.11 of the Regulations to permit charges to become effective January 1, 1997 as agreed by the parties.

Central Hudson states that a copy of its filing was served on Con Edison, Niagara Mohawk and the State of New York Public Service Commission.

*Comment date:* May 8, 1997, in accordance with Standard Paragraph E at the end of this notice.

**22. Delmarva Power & Light Company**

[Docket No. ER97–2491–000]

Take notice that on April 9, 1997, Delmarva Power & Light Company (Delmarva) tendered for filing service agreements providing for firm point-to-point transmission service to the City of Dover pursuant to Delmarva's open access transmission tariff.

Delmarva states that copies of the filing were provided to the City of Dover and its agent, Duke/Louis Dreyfus.

*Comment date:* May 8, 1997, in accordance with Standard Paragraph E at the end of this notice.

**23. Central Hudson Gas & Electric Corporation**

[Docket No. ER97–2493–000]

Take notice that Central Hudson Gas and Electric Corporation (Central Hudson) on April 9, 1997, tendered for filing its development of actual costs for 1996 related to substation service provided to Consolidated Edison Company of New York, Inc. (Con Edison) in accordance with the provisions of its Rate Schedule FERC No. 43.

Central Hudson indicates that the actual cost amounted to $263,171 for 1996 and will be the basis on which estimated charges for 1997 will be billed.

Central Hudson requests waiver on the notice requirements set forth in 18 CFR 35.11 of the Regulations to permit charges to become effective January 1, 1997 as agreed by the parties.

Central Hudson states that a copy of its filing was served on Con Edison and the State of New York Public Service Commission.

*Comment date:* May 8, 1997, in accordance with Standard Paragraph E at the end of this notice.

**24. Pennsylvania Power & Light Company**

[Docket No. ER97–2495–000]

Take notice that on April 10, 1997, Pennsylvania Power & Light Company (PP&L), filed a Service Agreement dated March 25, 1997 with Illinova Power Marketing (Illinova) under PP&L's FERC Electric Tariff, Original Volume No. 1. The Service Agreement adds Illinova as an eligible customer under the Tariff.

PP&L requests an effective date of April 10, 1997, for the Service Agreement.

PP&L states that copies of this filing have been supplied to Illinova and to the Pennsylvania Public Utility Commission.

*Comment date:* May 8, 1997, in accordance with Standard Paragraph E at the end of this notice.

**25. Arizona Public Service Company**

[Docket No. ER97–2494–000]

Take notice that on April 9, 1997, Arizona Public Service Company (Arizona) tendered for filing a Notice of Cancellation of the Axis Station Participation Agreement between Arizona and Imperial Irrigation District.

*Comment date:* May 8, 1997, in accordance with Standard Paragraph E at the end of this notice.

**26. Pennsylvania Power & Light Company**

[Docket No. ER97–2496–000]

Take notice that on April 10, 1997, Pennsylvania Power & Light Company (PP&L) filed a Service Agreement dated March 31, 1997 with Enerz Corporation (Enerz) under PP&L's FERC Electric Tariff, Original Volume No. 1. The Service Agreement adds Enerz as an eligible customer under the Tariff.

PP&L requests an effective date of April 10, 1997, for the Service Agreement.

PP&L states that copies of this filing have been supplied to Enerz and to the Pennsylvania Public Utility Commission.

*Comment date:* May 8, 1997, in accordance with Standard Paragraph E at the end of this notice.

**27. Louisville Gas and Electric Company**

[Docket No. ER97–2497–000]

Take notice that on April 10, 1997, Louisville Gas and Electric Company (LG&E) tendered for filing an executed Non-Firm Point-to-Point Transmission Service Agreement between LG&E and ConAgra Energy Services, Inc. under LG&E's Open Access Transmission Tariff.

*Comment date:* May 8, 1997, in accordance with Standard Paragraph E at the end of this notice.

**28. Southern California Edison Company**

[Docket No. ER97–2498–000]

Take notice that on April 10, 1997, Southern California Edison Company (Edison) tendered for filing Service Agreements (Service Agreements) with Cenerprise, Inc., Idaho Power Company, Nevada Power Company, Powerex, and Williams Energy Services Company for Non-Firm Point-To-Point Transmission Service under Edison's Open Access Transmission Tariff (Tariff) filed in compliance with FERC Order No. 888.

Edison filed the executed Service Agreements with the Commission in compliance with applicable Commission regulations. Edison also submitted a revised Sheet No. 152 (Attachment E) to the Tariff, which is an updated list of all current subscribers. Edison requests waiver of the Commission's notice requirement to permit an effective date of April 11, 1997 for Attachment E, and to allow the Service Agreements to become effective according to their terms.

Copies of this filing were served upon the Public Utilities Commission of the State of California and all interested parties.

*Comment date:* May 8, 1997, in accordance with Standard Paragraph E at the end of this notice.

**29. Florida Power Corporation**

[Docket No. ER97–2499–000]

Take notice that on April 10, 1997, Florida Power Corporation (Florida Power) filed a Cost-Based Wholesale Power Sales Tariff (CR–1) (Tariff) to permit Florida Power to engage in transactions for capacity and energy at negotiated rates, subject to a cost-based cap. Florida Power requests that the Tariff be made effective as of April 11, 1997.

*Comment date:* May 8, 1997, in accordance with Standard Paragraph E at the end of this notice.

**30. Boston Edison Company**

[Docket No. ER97–2500–000]

Take notice that on April 10, 1997, Boston Edison Company (Boston Edison) tendered for filing a Memorandum of Understanding and Agreement (Agreement) between Boston Edison, Pittsfield Generating Company, L.P. (Pittsfield) and U.S. Generating Company. The Agreement establishes terms and conditions of transmission service provided by Boston Edison to Pittsfield under Volume No. 3 of its FERC Electric Tariff. The Agreement also establishes a rate filing moratorium. Boston Edison asks that the Agreement be accepted as a Supplement to its Rate Schedule No. 171.

Boston Edison requests waiver of the Commission's notice requirement to permit the Agreement to become effective April 10, 1997 or, if such request is denied, on June 10, 1997.

*Comment date:* May 8, 1997, in accordance with Standard Paragraph E at the end of this notice.

**31. MidAmerican Energy Company**

[Docket No. ER97–2513–000]

Take notice that on April 11, 1997, MidAmerican Energy Company (MidAmerican), 106 East Second Street, Davenport, Iowa 52801, filed with the Commission Non-Firm Transmission Service Agreements with Union Electric Company (Union Electric) dated March 18, 1997, and Omaha Public Power District (OPPD) dated March 18, 1997, entered into pursuant to MidAmerican's Open Access Transmission Tariff.

MidAmerican requests an effective date of March 18, 1997 for the Agreements with Union Electric and OPPD, and accordingly seeks a waiver of the Commission's notice requirement. MidAmerican has served a copy of the filing on Union Electric, OPPD, the Iowa Utilities Board, the Illinois Commerce Commission and the South Dakota Public Utilities Commission.

*Comment date:* May 8, 1997, in accordance with Standard Paragraph E at the end of this notice.

**32. Kansas City Power & Light Co.**

[Docket No. ER97–2478–000]

Take notice that on April 10, 1997, Kansas City Power & Light Company (KCPL) tendered for filing a Service Agreement dated March 11, 1997, between KCPL and American Energy Solutions, Inc. KCPL proposes an effective date of March 17, 1997, and requests waiver of the Commission's notice requirement. This Agreement provides for the rates and charges for Non-Firm Transmission Service between KCPL and Citizens.

In its filing, KCPL states that the rates included in the above-mentioned Service Agreement are KCPL's rates and charges in the compliance filing to FERC Order No. 888 in Docket No. OA96–4–000.

*Comment date:* May 8, 1997, in accordance with Standard Paragraph E at the end of this notice.

**Standard Paragraph**

E. Any person desiring to be heard or to protest said filing should file a motion to intervene or protest with the Federal Energy Regulatory Commission, 888 First Street, NE., Washington, DC 20426, in accordance with Rules 211 and 214 of the Commission's Rules of Practice and Procedure (18 CFR 385.211 and 18 CFR 385.214). All such motions or protests should be filed on or before the comment date. Protests will be considered by the Commission in determining the appropriate action to be taken, but will not serve to make protestants parties to the proceeding. Any person wishing to become a party must file a motion to intervene. Copies of this filing are on file with the Commission and are available for public inspection.

**Lois D. Cashell,**

*Secretary.*

[FR Doc. 97–11422 Filed 5–1–97; 8:45 am]

BILLING CODE 6717–01–P

## DEPARTMENT OF ENERGY

## Federal Energy Regulatory Commission

**[Docket No. RP97–337–000]**

## Northern Natural Gas Company; Notice of Proposed Changes in FERC Gas Tariff

April 28, 1997.

Take notice that on April 23, 1997, Northern Natural Gas Company (Northern), tendered for filing to become part of Northern's FERC Gas Tariff, Fifth Revised Volume No. 1, the following tariff sheets proposed to be effective June 1, 1997:

Third Revised Sheet No. 135
First Revised Sheet No. 135A
First Revised Sheet No. 135B
First Revised Sheet No. 135C

Northern states that the above-referenced sheets are being filed to increase the annual cycle quantity and the associated deliverability quantity for service under Rate Schedule FDD by 3.5 Bcf, from 41.8 Bcf to 45.3 Bcf.

Northern states that copies of the filing were served upon the company's customers and interested State Commissions.

Any person desiring to be heard or to protest said filing should file a motion to intervene or protest with the Federal Energy Regulatory Commission, 888 First Street, NE., Washington, DC 20426, in accordance with 18 CFR 385.214 and 385.211 of the Commission's Rules and Regulations. All such motions or protests must be filed in accordance with Section 154.210 of the Commission's Regulations. Protests will be considered by the Commission in determining the appropriate action to be taken in this proceeding, but will not serve to make Protestant a party to the proceeding. Any person wishing to become a party must file a motion to intervene. Copies of this filing are on file with the Commission and are available for inspection.

**Lois D. Cashell,**

*Secretary.*

[FR Doc. 97–11419 Filed 5–1–97; 8:45 am]

BILLING CODE 6212–01–M

## DEPARTMENT OF ENERGY

### Federal Energy Regulatory Commission

**[Docket No. RP97–338–000]**

### Richfield Gas Storage System; Notice of Petition for Waiver or Exemption of Certain Order Nos. 587–C Requirements and Request for Expedited Consideration

April 28, 1997.

Take notice that on April 24, 1997, Richfield Gas Storage System filed a petition pursuant to Rule 207 of the Commission's Rules of Practice and Procedure for waiver or exemption of certain specific requirements of Order No. 587–C, all as more fully set forth in the petition of file with the Commission and open to public inspection.

Any person desiring to be heard or to protest this petition should file a motion to intervene or protest with the Federal Energy Regulatory Commission, 888 First Street, N.E., Washington, DC 20426, in accordance with Sections 385.214 and 385.211 of the Commission's Rules and Regulations. All such motions or protests should be filed on or before May 5, 1997. Protests will be considered by the Commission in determining the appropriate action to be taken, but will not serve to make protestants parties to the proceeding. Any person wishing to become a party must file a motion to intervene. Copies of this filing are on file with the Commission and are available for public inspection in the Public Reference Room.

**Lois D. Cashell,**

*Secretary.*

[FR Doc. 97–11420 Filed 5–1–97; 8:45 am]

BILLING CODE 6717–01–M

---

## DEPARTMENT OF ENERGY

### Federal Energy Regulatory Commission

**[Docket No. RP97–39–002]**

### Stingray Pipeline Company; Notice of Compliance Filing

April 28, 1997.

Take notice that on April 24, 1997, Stingray Pipeline Company (Stingray) tendered for filing as part of its FERC Gas Tariff, Third Revised Volume No. 1, Second Substitute First Revised Sheet No. 140 and Original Sheet No. 140A, to be effective December 1, 1996.

Stingray states that the purpose of the filing is to comply with the Federal Energy Regulatory Commission's Letter Order issued on March 25, 1997, in Docket No. RP97–39–000, which required Stingray to revise Section 13.6 of the General Terms and Conditions of its Tariff to be consistent with the policy enunciated in Southern Natural Gas Company, 69 FERC Paragraph 61,093 (1994), as to the discounting sequence for interruptible rates.

Stingray states that copies of the filing are being mailed to its jurisdictional customers, interested state commissions, and all parties on the official service list in Docket No. RP97–39–000.

Any person desiring to protest said filing should file a protest with the Federal Energy Regulatory Commission, 888 First Street, N.E., Washington, D.C. 20426, in accordance with Section 385.211 of the Commission's Rules and Regulations. All such protests must be filed as provided in Section 154.210 of the Commission's Regulations. Protests will be considered by the Commission in determining the appropriate action to be taken, but will not serve to make protestants parties to the proceeding. Copies of this filing are on file with the Commission and are available for public inspection in the Public Reference Room.

**Lois D. Cashell,**

*Secretary.*

[FR Doc. 97–11411 Filed 5–1–97; 8:45 am]

BILLING CODE 6717–01–M

---

## DEPARTMENT OF ENERGY

### Federal Energy Regulatory Commission

**[Docket No. RP97–38–002]**

### Trailblazer Pipeline Company; Notice of Compliance Filing

April 28, 1997.

Take notice that on April 24, 1997, Trailblazer Pipeline Company (Trailblazer) tendered for filing as part of its FERC Gas Tariff, Third Revised Volume No. 1, Second Substitute First Revised Sheet No. 139, to be effective December 1, 1996.

Trailblazer states that the purpose of the filing is to comply with the Commission's Letter Order issued on March 25, 1997, in Docket No. RP97–38–000, which required Trailblazer to revise Section 16.6 of the General Terms and Conditions of its Tariff to be consistent with the policy enunciated in Southern Natural Gas Company, 69 FERC paragraph 61,093 (1994), as to the discounting sequence for interruptible rates.

Trailblazer states that copies of the filing are being mailed to its jurisdictional customers, interested state commissions, and all parties on the official service list in Docket No. RP97–38–000.

Any person desiring to protest said filing should file a protest with the Federal Energy Regulatory Commission, 888 First Street, NE., Washington, DC 20426, in accordance with Section 385.211 of the Commission's Rules and Regulations. All such protests must be filed as provided in Section 154.210 of the Commission's Regulations. Protests will be considered by the Commission in determining the appropriate action to be taken, but will not serve to make protestants parties to the proceeding. Copies of this filling are on file with the Commission and are available for public inspection in the Public Reference Room.

**Lois D. Cashell,**

*Secretary.*

[FR Doc. 97–11410 Filed 5–1–97; 8:45 am]

BILLING CODE 6717–01–M

---

## DEPARTMENT OF ENERGY

### Federal Energy Regulatory Commission

**[Docket No. CP97–358–000]**

### Williams Natural Gas Company; Notice of Request Under Blanket Authorization

April 28, 1997.

Take notice that on April 21, 1997, Williams Natural Gas Company (WNG), One Williams Center, P.O. Box 3288, Tulsa, Oklahoma 74101, filed in Docket No. CP97–358–000 a request pursuant to Sections 157.205, 157.212(a), and 157.216(b) of the Commission's Regulations under the Natural Gas Act (18 CFR 157.205, 157.212(a), and 157.216(b)) for authorization to abandon in place approximately 4.3 miles of the Ft. Scott 8-inch lateral pipeline, to replace the Greeley Gas town border meter setting and connect it to an adjacent 16-inch pipeline, to convert two domestic customers to propane service, and to abandon service from the 8-inch pipeline, all in Bourbon County, Kansas, under the blanket certificate issued in Docket No. CP82–479–000, all as more fully set forth in the request which is on file with the Commission and open to public inspection.

WNG states that the Ft. Scott line was originally installed in 1929 and certificated in Docket No. G–298. WNG asserts that the pipeline to be abandoned is shallow, has a history of leaks, and is a high maintenance line. WNG contends that the only service on this line is to the Greeley town border and two domestic customers. The

Greeley town border was installed in 1947 pursuant to Docket No. G–934. It consisted of a single 4-inch meter run, and will be replaced size for size in the same location. WNG will construct approximately 500 feet of 4-inch pipeline to connect the replaced Greeley town border to an adjacent 16-inch pipeline. WNG asserts that the most recent peak day and annual volume for the Greeley town border is 2,049 Dth and 227,503 Dth, respectively. WNG does not anticipate any change in volume as a result of the proposal. WNG states that Greeley is aware of and has agreed to the proposal. Additionally, WNG claims that the domestic customers have agreed to convert to propane.

WNG asserts that the proposal will not significantly affect a sensitive environmental area. WNG states it has attached copies of its blanket clearance letters from the U.S. Fish and Wildlife Service, the Kansas Department of Wildlife and Parks, and the Kansas State Historic Preservation Officer. Additionally, WNG states that it is sending a copy of the request to the Kansas Corporation Commission. WNG states that the proposal is not prohibited by an existing tariff, and WNG as sufficient capacity to accomplish the deliveries specified without detriment or disadvantage to its other customers.

WNG submitted the two letters that it submitted to its domestic customers, in which WNG has offered to reimburse the customers for the cost of converting from natural gas to propane. WNG states that the cost of conversion is $12,090.45 for the two domestic customers.

Any person or the Commission's staff may, within 45 days after issuance of the instant notice by the Commission, file pursuant to Rule 214 of the Commission's Procedural Rules (18 CFR 385.214) a motion to intervene or notice of intervention and pursuant to Section 157.205 of the Regulations under the Natural Gas Act (18 CFR 157.205) a protest to the request. If no protest is filed within the time allowed therefor, the proposed activity shall be deemed authorized effective the day after the time allowed for filing a protest. If a protest is filed and not withdrawn within 30 days after the time allowed for filing a protest, the instant request shall be treated as an application for authorization pursuant to Section 7 of the Natural Gas Act.

**Lois D. Cashell,**

*Secretary.*

[FR Doc. 97–11398 Filed 5–1–97; 8:45 am]

**BILLING CODE 6717–01–M**

## DEPARTMENT OF ENERGY

## Federal Energy Regulatory Commission

**[Docket No. EG97–55–000, et al.]**

## L'Energia, Limited Partnership, et al.; Electric Rate and Corporate Regulation Filings

April 25, 1997.

Take notice that the following filings have been made with the Commission:

### 1. L'Energia, Limited Partnership

[Docket No. EG97–55–000]

On April 15, 1997 L'Energia, Limited Partnership (L'Energia) filed with the Federal Energy Regulatory Commission (Commission) an application for determination of exempt wholesale generator status pursuant to Part 365 of the Commission's Regulations.

L'Energia is a Delaware Limited Partnership which was organized exclusively for the purpose of developing, owning, and operating an electric generating facility in Lowell, Massachusetts. L'Energia's facility is an 85 MW net capacity, gas-fired cogeneration facility. L'Energia states that no rate or charge in connection with this facility was in effect under the laws of any state as of October 24, 1992 or any time thereafter. L'Energia further states that copies of the application were served upon the Securities and Exchange Commission and the Massachusetts Department of Public Utilities.

*Comment date:* May 9, 1997, in accordance with Standard Paragraph E at the end of this notice. The Commission will limit its consideration of comments to those that concern the adequacy or accuracy of the application.

### 2. American Ref-Fuel Company of Delaware County, L.P.

[Docket No. EG97–56–000]

On April 15, 1997, American Ref-Fuel Company of Delaware County, L.P. (''ARC''), a Delaware limited partnership, with its principal place of business at c/o American Ref-Fuel Company, 770 North Eldridge, Houston, TX 77079, filed with the Federal Energy Regulatory Commission an application for determination of exempt wholesale generator status pursuant to Part 365 of the Commission's regulations.

ARC is engaged directly and exclusively in the business of owning or operating, or both owning and operating, a municipal solid waste-fired small power production facility with a maximum net power production capacity of 79.5 MW which is an eligible facility. All of the facility's electric power net of the facility's operating electric power is and will be purchased at wholesale by Atlantic City Electric Company and PECO Energy Company.

*Comment date:* May 12, 1997, in accordance with Standard Paragraph E at the end of this notice. The Commission will limit its consideration of comments to those that concern the adequacy or accuracy of the application.

### 3. Lowell Cogeneration Company Limited Partnership

[Docket No. EG97–57–000]

On April 15, 1997 Lowell Cogeneration Company Limited Partnership (LCCLP) filed with the Federal Energy Regulatory Commission (Commission) an application for determination of exempt wholesale generator status pursuant to Part 365 of the Commission's Regulations.

LCCLP is a Delaware Limited Partnership which was organized exclusively for the purpose of developing, owning, and operating an electric generating facility in Lowell, Massachusetts. The Facility is a 29 MW (net) gas turbine topping-cycle cogeneration facility fueled primarily by natural gas. LCCLP states that no rate or charge in connection with this facility was in effect under the laws of any state as of October 24, 1992 or any time thereafter. LCCLP further states that copies of the application were served upon the Securities and Exchange Commission and the Massachusetts Department of Public Utilities.

*Comment date:* May 12, 1997, in accordance with Standard Paragraph E at the end of this notice. The Commission will limit its consideration of comments to those that concern the adequacy or accuracy of the application.

### 4. New York State Electric & Gas Corporation

[Docket No. ER97–1958–000]

Take notice that New York State Electric & Gas Corporation (NYSEG) on April 1, 1997, tendered for filing a letter requesting that the Federal Energy Regulatory Commission (Commission) withdraw from further consideration service agreements (Service Agreements) filed by NYSEG on March 4, 1997, under which NYSEG proposed to provide capacity and/or energy to Koch Energy Trading, Inc. (Koch), Duke/Louis Dreyfus L.L.C. (DLD), Federal Energy Sales, Inc.(FES), Citizens Lehman Power Sales (Citizens), and Rainbow Energy Marketing Corporation (REM) in accordance with the NYSEG market-based power sales tariff (Tariff).

By order issued on March 21, 1997 under Docket No. ER97–1347–000, the Commission denied without prejudice to refiling, NYSEG's application to sell power under the Tariff. The Service Agreements were filed pursuant to Section 35.1 of the Commission's Rules of Practice and Procedure.

NYSEG served copies of the filing upon the New York State Public Service Commission, Koch, FES, DLD, Citizens and REM.

*Comment date:* May 8, 1997, in accordance with Standard Paragraph E at the end of this notice.

**5. Minnesota Power and Light Company**

[Docket No. ER97–2379–000]

Take notice that on April 17, 1997, Minnesota Power and Light Company tendered for filing an amendment in the above-referenced docket.

*Comment date:* May 9, 1997, in accordance with Standard Paragraph E at the end of this notice.

**6. Deseret Generation & Transmission Cooperative**

[Docket No. ER97–2473–000]

Take notice that on April 9, 1997, Deseret Generation & Transmission Cooperative tendered for filing a Notice of Termination of Rate Schedule FERC No. 1 (Power Sale Agreement with Department of Water & Power of the City of Los Angeles).

*Comment date:* May 9, 1997, in accordance with Standard Paragraph E at the end of this notice.

**7. Central Power and Light Company, West Texas Utilities Company, Public Service Company of Oklahoma and Southwestern Electric Power Co.**

[Docket No. ER97–2475–000]

Take notice that on April 9, 1997, Central Power and Light Company, West Texas Utilities Company, Public Service Company of Oklahoma and Southwestern Electric Power Company (collectively, the ''CSW Operating Companies'') submitted for filing a service agreement under which the CSW Operating Companies will provide transmission service to Arkansas Electric Cooperative Corporation in accordance with the CSW Operating Companies' open access transmission service tariff. The CSW Operating Companies request that the agreement be accepted to become effective on March 7, 1997.

The CSW Operating Companies state that a copy of this filing has been served on Arkansas Electric Cooperative Corporation and the Arkansas Public Service Commission.

*Comment date:* May 9, 1997, in accordance with Standard Paragraph E at the end of this notice.

**8. Georgia Power Company**

[Docket No. ER97–2483–000]

Take notice that on April 10, 1997, Georgia Power Company (Georgia Power) filed with the Commission six copies of a ''Pseudo Scheduling and Service Agreement'' (PSSA) dated April 8, 1997, between Georgia Power and Municipal Electric Authority of Georgia (MEAG) (collectively, the Parties). Upon its effectiveness, the PSSA will terminate the Parties currently effected Wholesale Partial Requirements Electric Service Contract dated November 23, 1992, which contract incorporates the terms of Georgia Power's Partial Requirements Tariff effective January 1, 1993.

Georgia Power states that the PSSA reflects the outcome of several months of negotiation between Georgia Power and MEAG aimed at restructuring the parties service relationship in light of growing competitive pressures and opportunities. The filing states that upon its effectiveness, the PSSA will afford MEAG significant independence and flexibility to pursue bulk power opportunities in the competitive marketplace, and at the same time ensure that the reliability and economies inherent in control area operation are preserved for the benefit of Georgia Power's and MEAG's customers.

*Comment date:* May 9, 1997, in accordance with Standard Paragraph E at the end of this notice.

**9. Tampa Electric Company**

[Docket No. ER97–2484–000]

Take notice that on April 10, 1997, Tampa Electric Company (Tampa Electric) tendered for filing a Letter of Commitment providing for the sale of capacity and energy to the Utilities Commission, City of New Smyrna Beach, Florida (New Smyrna).

Tampa Electric proposes that the Letter of Commitment be made effective as of June 1, 1997, and therefore requests waiver of the Commission's notice requirement.

Tampa Electric states that a copy of the filing has been served on New Smyrna and the Florida Public Service Commission.

*Comment date:* May 9, 1997, in accordance with Standard Paragraph E at the end of this notice.

**10. Interstate Power Company**

[Docket No. ER97–2501–000]

Take notice that on April 10, 1997, Interstate Power Company (IPW) tendered for filing a Network Transmission Service and Operating Agreement between IPW and the City of McGregor. Under the Service Agreement, IPW will provide Network Integration Transmission Service to the City of McGregor.

*Comment date:* May 9, 1997, in accordance with Standard Paragraph E at the end of this notice.

**11. Interstate Power Company**

[Docket No. ER97–2502–000]

Take notice that on April 11, 1997, Interstate Power Company (IPW) tendered for filing a Network Transmission Service and Operating Agreement between IPW and Wisconsin Power and Light (WPL). Under the Service Agreement, IPW will provide Network Integration Transmission Service to WPL for the City of Guttenberg.

*Comment date:* May 9, 1997, in accordance with Standard Paragraph E at the end of this notice.

**12. Interstate Power Company**

[Docket No. ER97–2503–000]

Take notice that on April 11, 1997, Interstate Power Company (IPW) tendered for filing three Transmission Service Agreements between IPW and CornBelt Power Cooperative (CornBelt). Under the Transmission Service Agreements, IPW will provide firm point-to-point transmission service to CornBelt.

*Comment date:* May 9, 1997, in accordance with Standard Paragraph E at the end of this notice.

**13. Wisconsin Public Service Corporation**

[Docket No. ER97–2504–000]

Take notice that on April 11, 1997, Wisconsin Public Service Corporation (''WPSC'') tendered for filing an executed Transmission Service Agreement between WPSC and North Central Power Co., Inc. The Agreement provides for transmission service under the Open Access Transmission Service Tariff, FERC Original Volume No. 11.

*Comment date:* May 9, 1997, in accordance with Standard Paragraph E at the end of this notice.

**14. Carolina Power & Light Company**

[Docket No. ER97–2505–000]

Take notice that on April 11, 1997, Carolina Power & Light Company (CP&L) tendered for filing separate Service Agreements for Non-Firm Point to Point Transmission Service executed between CP&L and the following Eligible Transmission Customers: Ohio Edison Company and Pennsylvania

Power Company (The Ohio Edison System); ConAgra Energy Services, Inc.; and PacifiCorp Power Marketing, Inc. Service to each Eligible Customer will be in accordance with the terms and conditions of Carolina Power & Light Company's Open Access Transmission Tariff.

Copies of the filing were served upon the North Carolina Utilities Commission and the South Carolina Public Service Commission.

*Comment date:* May 9, 1997, in accordance with Standard Paragraph E at the end of this notice.

**15. Northern Indiana Public Service Company**

[Docket No. ER97–2506–000]

Take Notice that on April 11, 1997, Northern Indiana Public Service Company tendered for filing an executed Service Agreement between Northern Indiana Public Service Company and LG&E Power Marketing, Inc.

Under the Service Agreement, Northern Indiana Public Service Company agrees to provide services to LG&E Power Marketing, Inc. under Northern Indiana Public Service Company's Power Sales Tariff. Northern Indiana Public Service Company and LG&E Power Marketing, Inc. request waiver of the Commission's sixty-day notice requirement to permit an effective date of April 30, 1997.

Copies of this filing have been sent to the Indiana Utility Regulatory Commission and the Indiana Office of Utility Consumer Counselor.

*Comment date:* May 9, 1997, in accordance with Standard Paragraph E at the end of this notice.

**16. Ohio Valley Electric Corporation Indiana-Kentucky Electric Corporation**

[Docket No. ER97–2514–000]

Take notice that on April 11, 1997, Ohio Valley Electric Corporation (including its wholly-owned subsidiary, Indiana-Kentucky Electric Corporation) (''OVEC'') tendered for filing a Service Agreement for Non-Firm Point-To-Point Transmission Service, dated April 2, 1997 (the ''Service Agreement'') between The Power Company of America, L.P. (''PCA'') and OVEC. OVEC proposes an effective date of April 2, 1997 and requests waiver of the Commission's notice requirement to allow the requested effective date. The Service Agreement provides for non-firm transmission service by OVEC to PCA.

In its filing, OVEC states that the rates and charges included in the Service Agreement are the rates and charges set forth in OVEC's Order No. 888 compliance filing (Docket No. OA96–190–000).

A copy of this filing was served upon PCA.

*Comment date:* May 9, 1997, in accordance with Standard Paragraph E at the end of this notice.

**17. Wisconsin Power and Light Company**

[Docket No. ER97–2515–000]

Take notice that on April 11, 1997, Wisconsin Power and Light Company (WP&L), tendered for filing Form Of Service Agreements for Firm and Non-Firm Point-to-Point Transmission Service establishing American Energy Solutions, Inc. as a point-to-point transmission customer under the terms of WP&L's transmission tariff.

WP&L requests an effective date of March 6,1997, and, accordingly, seeks waiver of the Commission's notice requirements. A copy of this filing has been served upon the Public Service Commission of Wisconsin.

*Comment date:* May 9, 1997, in accordance with Standard Paragraph E at the end of this notice.

**18. Wisconsin Public Service Corporation**

[Docket No. ER97–2516–000]

Take notice that on April 11, 1997, Wisconsin Public Service Corporation (WPSC), tendered for filing an executed Transmission Service Agreement between WPSC and Manitowoc Public Utilities. The Agreement provides for transmission service under the Open Access Transmission Service Tariff, FERC Original Volume No. 11.

*Comment date:* May 9, 1997, in accordance with Standard Paragraph E at the end of this notice.

**19. XENERGY, Inc.**

[Docket No. ER97–2517–000]

Take notice that on April 11, 1997, XENERGY, Inc. (XENERGY) tendered for filing with the Federal Energy Regulatory Commission Rate Schedule No. 1, which permits XENERGY to make wholesale power sales at market-based rates.

*Comment date:* May 9, 1997, in accordance with Standard Paragraph E at the end of this notice.

**20. New York State Electric & Gas Corporation**

[Docket No. ER97–2518–000]

Take notice that on April 11, 1997, New York State Electric & Gas Corporation (NYSEG), tendered for filing with the Federal Energy Regulatory Commission NYSEG's Electric Power Sales Tariff, FERC Electric Rate Schedule, Original Volume No. 1, which permits NYSEG to make wholesale power sales at market-based rates or cost-based rates.

*Comment date:* May 9, 1997, in accordance with Standard Paragraph E at the end of this notice.

**21. South Carolina Electric & Gas Company**

[Docket No. ER97–2521–000]

Take notice that on April 11, 1997, South Carolina Electric & Gas Company (SCE&G) submitted a service agreement establishing Koch Energy Trading, Inc. (KET) as a customer under the terms of SCE&G's Open Access Transmission Tariff.

SCE&G requests an effective date of one day subsequent to the filing of the service agreement. Accordingly, SCE&G requests waiver of the Commission's notice requirements. Copies of this filing were served upon KET, and the South Carolina Public Service Commission.

*Comment date:* May 9, 1997, in accordance with Standard Paragraph E at the end of this notice.

**22. Wisconsin Electric Power Company**

[Docket No. ER97–2522–000]

Take notice that Wisconsin Electric Power Company (Wisconsin Electric) on April 11, 1997, tendered for filing an Electric Service Agreement and a Non-Firm Transmission Service Agreement between itself and AIG Trading Corp. The Electric Service Agreement provides for service under Wisconsin Electric's Coordination Sales Tariff. The Transmission Service Agreement allows AIG Trading Corp. to receive non-firm transmission service under Wisconsin Electric's FERC Electric Tariff, Original Volume No. 7.

Wisconsin Electric requests an effective date of sixty days from date of filing. Copies of the filing have been served on AIG Trading Corp., the Public Service Commission of Wisconsin and the Michigan Public Service Commission.

*Comment date:* May 9, 1997, in accordance with Standard Paragraph E at the end of this notice.

**23. Rochester Gas and Electric Corporation**

[Docket No. ER97–2523–000]

Take notice that on April 11, 1997, Rochester Gas and Electric Corporation (RG&E) filed a Service Agreement between RG&E and the CMS Marketing, Services and Trading Company (Customer). This Service Agreement specifies that the Customer has agreed

to the rates, terms and conditions of the RG&E open access transmission tariff filed on July 9, 1996 in Docket No. OA96–141–000.

RG&E requests waiver of the Commission's sixty (60) day notice requirements and an effective date of April 7, 1997 for the CMS Marketing, Services and Trading Company Service Agreement. RG&E has served copies of the filing on the New York State Public Service Commission and on the Customer.

*Comment date:* May 9, 1997, in accordance with Standard Paragraph E at the end of this notice.

**24. Central Illinois Public Service Company**

[Docket No. ER97–2525–000]

Take notice that on April 14, 1997, Central Illinois Public Service Company (CIPS) submitted a Service Agreement, dated December 31, 1996, establishing AIG Trading Corporation as a customer under the terms of CIPS' Coordination Sales Tariff CST–1 (CST–1 Tariff).

CIPS requests an effective date of March 15, 1997 for the service agreement and the revised Index of Customers. Accordingly, CIPS requests waiver of the Commission's notice requirements. Copies of this filing were served upon AIG Trading Corporation and the Illinois Commerce Commission.

*Comment date:* May 9, 1997, in accordance with Standard Paragraph E at the end of this notice.

**25. Duke Power Company**

[Docket No. ER97–2526–000]

Take notice that on April 14, 1997, Duke Power Company (Duke) tendered for filing a Transmission Service Agreement between Duke, on its own behalf and acting as agent for its wholly-owned subsidiary, Nantahala Power and Light Company, and Ohio Edison Company and Pennsylvania Power Company, collectively the Ohio Edison System, dated as of March 7, 1997 (TSA). The parties have not engaged in any transactions under the TSA as of the date of filing. Duke states that the TSA sets out the transmission arrangements under which Duke will provide the Ohio Edison System non-firm point-to-point transmission service under Duke's Pro Forma Open Access Transmission Tariff. Duke requests that the Agreement be made effective as of March 17, 1997.

*Comment date:* May 9, 1997, in accordance with Standard Paragraph E at the end of this notice.

**26. Central Illinois Light Company**

[Docket No. ER97–2527–000]

Take notice that Central Illinois Light Company (CILCO), 300 Liberty Street, Peoria, Illinois 61202, on April 14, 1997, tendered for filing with the Commission a substitute Index of Customers under its Coordination Sales Tariff and service agreements for three new customers.

CILCO requested an effective date of April 30, 1997.

Copies of the filing were served on the affected customers and the Illinois Commerce Commission.

*Comment date:* May 9, 1997, in accordance with Standard Paragraph E at the end of this notice.

**27. Central Illinois Light Company**

[Docket No. ER97–2528–000]

Take notice that Central Illinois Light Company (CILCO), 300 Liberty Street, Peoria, Illinois 61602, on April 14, 1997, tendered for filing with the Commission a substitute Index of Point-To-Point Transmission Service Customers under its Open Access Transmission Tariff and service agreements for four new customers.

CILCO requested an effective date of April 3, 1997.

Copies of the filing were served on all affected customers and the Illinois Commerce Commission.

*Comment date*: May 9, 1997, in accordance with Standard Paragraph E at the end of this notice.

**28. Southwestern Power Marketers, Incorporated**

[Docket No. ER97–2529–000]

Take notice that Southwestern Power Marketers, Incorporated (Southwestern) on April 14, 1997, tendered for filing pursuant to Rule 207 of the Commission's Rules of Practice and Procedure, 18 CFR 385.207, a petition for waivers and blanket approvals under various regulations of the Commission, and an order accepting its Rate Schedule No. 1, to be effective on July 1, 1997.

Southwestern intends to engage in electric power and energy transactions as a marketer and a broker. In transactions where Southwestern purchases power, including capacity and related services from electric utilities, qualifying facilities and independent power producers, and resells such power to other purchasers, Southwestern will be functioning as a marketer. In Southwestern's marketing transactions, Southwestern proposes to charge rates mutually agreed upon by the parties. All sales will be at arms-length, and no sales will be made to affiliated entities. In transactions where Southwestern does not take title for the electric power and/or energy, Southwestern will be limited to the role of a broker and charge a fee for its services. Southwestern is not in the business of producing or transmitting electric power. Southwestern does not currently have or contemplate acquiring title to any electric power transmission facilities.

Rate Schedule No. 1 provides for the sale of energy and capacity at agreed prices. Rate Schedule No. 1 also provides that no sales may be made to affiliates.

*Comment date*: May 9, 1997, in accordance with Standard Paragraph E at the end of this notice.

**29. Interstate Power Company**

[Docket No. ER97–2530–000]

Take notice that on April 14, 1997, Interstate Power Company (IPW) tendered for filing a Transmission Service Agreement between IPW and Delhi Energy Services, Inc. (Delhi). Under the Transmission Service Agreement, IPW will provide non-firm point-to-point transmission service to Delhi.

*Comment date*: May 9, 1997, in accordance with Standard Paragraph E at the end of this notice.

**30. Texas-New Mexico Power Company**

[Docket No. ER97–2531–000]

Take notice that on April 14, 1997, Texas-New Mexico Power Company tendered for filing an application for a Commission order accepting a proffered rate schedule for market-based rates and providing for associated authorizations and requirements.

*Comment date*: May 9, 1997, in accordance with Standard Paragraph E at the end of this notice.

**31. Zond Development Corporation**

[Docket No. ER97–2532–000]

On April 10, 1997, Zond Development Corporation, 444 S. Flower Street, Suite 4545, Los Angeles, California 90071 (Zond Development), filed with the Federal Energy Regulatory Commission pursuant to Sections 35.12 and 35.205 of the Commission's regulations the Application of Zond Development Corporation For Order Accepting Rates For Filing, Determining Rates To Be Just And Reasonable, And Granting Certain Waivers and Preapprovals.

Zond Development is constructing a wind turbine facility (along with certain appurtenant interconnected transmission facilities) near Alta, Iowa. The facility will consist of approximately 150 wind turbines, each with a nameplate capacity of 750 kW, resulting in a peak generating capacity of 112.5 MW. All energy and capacity produced by the facility will be sold to MidAmerican Energy Company at rates negotiated between the parties.

*Comment date*: May 9, 1997, in accordance with Standard Paragraph E at the end of this notice.

**32. Peco Energy Company**

[Docket No. ER97–2533–000]

Take notice that on April 14, 1997, PECO Energy Company (PECO), filed a Service Agreement dated March 31, 1997 with Plum Street Energy Marketing (PLUM STREET) under PECO's FERC Electric Tariff Original Volume No. 1 (Tariff). The Service Agreement adds Plum Street as a customer under the Tariff.

PECO requests an effective date of March 31, 1997, for the Service Agreement.

PECO states that copies of this filing have been supplied to Plum Street and to the Pennsylvania Public Utility Commission.

*Comment date*: May 9, 1997, in accordance with Standard Paragraph E at the end of this notice.

**33. Minnesota Power & Light Company**

[Docket No. ER97–2534–000]

Take notice that on April 14, 1997, Minnesota Power & Light Company, tendered for filing signed Service Agreements with the following: Citizens Lehman Power Sales, ConAgra Energy Services, Inc., Illinois Power Company, NorAm Energy Services, Inc., PanEnergy Power Services, Sonat Power Marketing L.P., Southern Energy Trading & Marketing, Inc., Union Electric Company, Western Resources, and WPS Energy Services, Inc.

Under its Non-Firm Point-to-Point Transmission Service to satisfy its filing requirements under this tariff.

*Comment date:* May 9, 1997, in accordance with Standard Paragraph E at the end of this notice.

**34. Wisconsin Public Service Corporation**

[Docket No. ER97–2535–000]

Take notice that on April 14, 1997, Wisconsin Public Service Corporation (WPSC), tendered for filing an executed Transmission Service Agreement between WPSC and CMS Marketing, Services and Trading. The Agreement provides for transmission service under the Open Access Transmission Service Tariff, FERC Original Volume No. 11.

*Comment date:* May 9, 1997, in accordance with Standard Paragraph E at the end of this notice.

**35. Consumers Power Company**

[Docket No. FA93–3–002]

Take notice that on January 21, 1997, Consumers Power Company tendered for filing its compliance filing in the above-referenced docket.

*Comment date:* May 9, 1997, in accordance with Standard Paragraph E at the end of this notice.

**36. Oklahoma Gas & Electric Company**

[Docket No. FA93–52–001]

Take notice that on March 28, 1997, Oklahoma Gas & Electric Company tendered for filing its compliance filing in the above-referenced docket.

*Comment date:* May 9, 1997, in accordance with Standard Paragraph E at the end of this notice.

**Standard Paragraph**

E. Any person desiring to be heard or to protest said filing should file a motion to intervene or protest with the Federal Energy Regulatory Commission, 888 First Street, N.E., Washington, D.C. 20426, in accordance with Rules 211 and 214 of the Commission's Rules of Practice and Procedure (18 CFR 385.211 and 18 CFR 385.214). All such motions or protests should be filed on or before the comment date. Protests will be considered by the Commission in determining the appropriate action to be taken, but will not serve to make protestants parties to the proceeding. Any person wishing to become a party must file a motion to intervene. Copies of this filing are on file with the Commission and are available for public inspection.

**Lois D. Cashell,**

*Secretary.*

[FR Doc. 97–11450 Filed 5–1–97; 8:45 am]

BILLING CODE 6717–01–P

---

## DEPARTMENT OF ENERGY

## Federal Energy Regulatory Commission

**[Project Nos. DI97–5–000, et al.]**

## Hydroelectric Applications [SomersVille HydroPower GenCo, et al.]; Notice of Applications

Take notice that the following hydroelectric applications have been filed with the Commission and are available for public inspection:

*1a. Type of Application:* Declaration of Intention.

*b. Project No.:* DI97–5–000.

*c. Date Filed:* March 27, 1997.

*d. Applicant:* SomersVille HydroPower GenCo.

*e. Name of Project:* Somersville Mill Pond Dam Project.

*f. Location:* Scantic River, in the Town of Somers, Tolland County, Connecticut.

*g. Filed Pursuant to:* Section 23(b) of the Federal Power Act, 16 U.S.C. 817(b).

*h. Applicant Contact:* Joseph S. Cudnik, Jr., 70 Somers Hill Circle, Somers, CT 06071–1927, (860) 654–9378.

*i. FERC Contact:* Etta Foster, (202) 219–2679.

*j. Comment Date:* May 30, 1997.

*k. Description of Project:* The proposed project will consist of: (1) A dam, 21.5 feet-high and 185-feet wide; (2) a spillway; (3) a 70-foot-long penstock, 8 feet in diameter; (4) a powerhouse containing one generating unit with a rated capacity of 220 kW; (5) a tailrace; (6) a reservoir with a surface area of 217,800 square feet, and a drainage area of 57 square feet; (7) three transmission lines, and (8) appurtenant facilities.

When a petition for Declaratory Order is filed with the Federal Energy Regulatory Commission, the Federal Power Act requires the Commission to investigate and determine if the interests of interstate or foreign commerce would be affected by the project. The Commission also determines whether or not the project: (1) Would be located on a navigable waterway; (2) would occupy or affect public lands or reservations of the United States; (3) would utilize surplus water or water power from a government dam; or (4) if applicable, has involved or would involve any construction subsequent to 1935 that may have increased or would increase the project's head or generating capacity, or have otherwise significantly modified the project's pre-1935 design or operation.

*l. Purpose of Project:* Applicant shall negotiate a purchase agreement for the sale of power generated at the project.

*m. This notice also consists of the following standard paragraphs:* B, C1, and D2.

*2a. Type of Application:* Changes in Project Land Rights and Non-Project Use of Project Lands and Waters.

*b. Project Name and No.:* Pillager Hydroelectric Project, FERC Project No. 2663–005.

*c. Date Filed:* February 14, 1997.

*d. Applicant:* Minnesota Power and Light Company.

*e. Location:* Lake Placid on the Crow Wing River in the Township of Pillager in Morrison County, Minnesota.

*f. Filed Pursuant to:* Federal Power Act, 16 U.S.C 791(a)–825(r).

*g. Applicant Contact:* Mr. John J. Paulson, Minnesota Power and Light Company 30 West Superior Street, Duluth, MN 55802, (218) 722–5642.

*h. FERC Contact:* Steve Naugle, (202) 219–2805.

*i. Comment Date:* June 2, 1997.

*j. Description of the Filing:* Minnesota Power and Light Company requests

approval to convey leases of land within the Pillager Project boundary to adjacent private property owners to provide access to Lake Placid. The total amount of project land proposed for lease conveyance is 26.31 acres. The project lands that would be leased are located adjacent to lots 1 through 17 of the Tall Timbers Subdivision and lots 1 through 15 of the North View Shores Subdivision. The applicant proposes to convey both group and individual access leases.

*k. This notice also consists of the following standard paragraphs:* B, C1, D2.

*3a. Type of Application:* Surrender of License (Major).

*b. Project No.:* 3034–008.

*c. Date Filed:* February 24, 1997.

*d. Applicant:* Arkansas Electric Cooperative Corporation.

*e. Name of Project:* Arkansas River Lock and Dam No. 3, Hydroelectric Project.

*f. Location:* On the Arkansas River in Jefferson and Lincoln Counties, Arkansas.

*g. Filed Pursuant to:* Federal Power Act, 16 U.S.C 791(a)–825(r).

*h. Contacts:* S. Maurice Robinson, Director, Engineering, Construction & Operations, Arkansas Electric Cooperative Corporation, P.O. Box 194208, Little Rock, AR 72219–4208, (501) 570–2200.

*i. FERC Contact:* Mr. Lynn R. Miles, (202) 219–2671.

*j. Comment Date:* May 28, 1997.

*k. Description of the Proposed Action:* The licensee requests to surrender its license for the proposed project.

*l. This notice also consists of the following standard paragraphs:* B, C2, and D2.

*4a. Type of Filing:* Request for Extension of Time to Commence Project Construction.

*b. Applicant:* Adirondack Hydro Development Corporation and McGrath Industries, Inc.

*c. Project No.:* The proposed Waterford Hydroelectric Project, FERC No. 10648–003 is to be located on the Hudson River, in Saratoga and Rensselear Counties, New York.

*d. Date Filed:* March 12, 1997.

*e. Pursuant to:* P.L. 104–242.

*f. Applicant Contact:* Keith F. Corneau, Vice President, Adirondack Resource Management Associates, LLC, P.O. Box 829, Two Franklin Square, Saratoga Springs, NY 12866, (518) 587–4300.

*g. FERC Contact:* Mr. Lynn R. Miles, (202) 219–2671.

*h. Comment Date:* May 27, 1997.

*i. Description of the Requests:* The licensees request that the existing deadline for the commencement of construction for FERC Project No. 10648 be extended to June 9, 1999. The licensees also request that the deadline for submission of an access agreement with the State of New York under Article 305 be extended to 60 days prior to commencement of construction of the project. Further, the licensees request that the deadline to file a dam rehabilitation plan and schedule, as required by article 306, be extended to June 9, 1999.

*j. This notice also consists of the following standard paragraphs:* B, C1, and D2.

*5a. Type of Application:* Surrender of License.

*b. Project No.:* 4357–016.

*c. Date Filed:* April 1, 1997.

*d. Applicant:* Clifton Hydro-Power Limited Partnership.

*e. Name of Project:* Clifton Mills #2.

*f. Location:* On the Pacolet River, in Spartansburg County, South Carolina.

*g. Filed Pursuant to:* Federal Power Act, 16 USC Section 791(a)—825(r).

*h. Applicant Contact:* Paul V. Nolan, Esq., 5515 N. 17th Street, Arlington, VA 22205, (703) 534–5509.

*i. FERC Contact:* Regina Saizan, (202) 219–2673.

*j. Comment Date:* June 9, 1997.

*k. Description of Application:* The licensee seeks to surrender its license because it was not able to obtain financing to complete construction of the project. Only five percent of the construction work to complete the project has been done.

*l. This notice also consists of the following standard paragraphs:* B, C2, and D2.

## Standard Paragraphs

B. *Comments, Protests, or Motions to Intervene*—Anyone may submit comments, a protest, or a motion to intervene in accordance with the requirements of Rules of Practice and Procedure, 18 CFR 385.210, .211, .214. In determining the appropriate action to take, the Commission will consider all protests or other comments filed, but only those who file a motion to intervene in accordance with the Commission's Rules may become a party to the proceeding. Any comments, protests, or motions to intervene must be received on or before the specified comment date for the particular application.

C1. *Filing and Service of Responsive Documents*—Any filings must bear in all capital letters the title ''COMMENTS'', ''RECOMMENDATIONS FOR TERMS AND CONDITIONS'', ''PROTEST'', or ''MOTION TO INTERVENE'', as applicable, and the Project Number of the particular application to which the filing refers. Any of the above-named documents must be filed by providing the original and the number of copies provided by the Commission's regulations to: The Secretary, Federal Energy Regulatory Commission, 888 First Street, NE., Washington, DC 20426. A copy of any motion to intervene must also be served upon each representative of the Applicant specified in the particular application.

C2. *Filing and Service of Responsive Documents*—Any filings must bear in all capital letters the title ''COMMENTS,'' ''RECOMMENDATIONS FOR TERMS AND CONDITIONS,'' ''NOTICE OF INTENT TO FILE COMPETING APPLICATION,'' ''COMPETING APPLICATION,'' ''PROTEST,'' or ''MOTION TO INTERVENE,'' as applicable, and the Project Number of the particular application to which the filing refers. Any of these documents must be filed by providing the original and the number of copies provided by the Commission's regulations to: The Secretary, Federal Energy Regulatory Commission, 888 First Street, NE., Washington, DC 20426. A copy of a notice of intent, competing application, or motion to intervene must also be served upon each representative of the Applicant specified in the particular application.

D2. *Agency Comments*—Federal, state, and local agencies are invited to file comments on the described application. A copy of the application may be obtained by agencies directly from the Applicant. If an agency does not file comments within the time specified for filing comments, it will be presumed to have no comments. One copy of an agency's comments must also be sent to the Applicant's representatives.

Dated: April 25, 1997, Washington, DC.

**Lois D. Cashell,**

*Secretary.*

[FR Doc. 97–11421 Filed 5–1–97; 8:45 am]

BILLING CODE 6717–01–P

---

## DEPARTMENT OF ENERGY

### Southeastern Power Administration

### Proposed Rate Adjustment

**AGENCY:** Southeastern Power Administration (Southeastern), DOE.

**ACTION:** Notice of rate order.

**SUMMARY:** The Deputy Secretary of the Department of Energy confirmed and approved, on an interim basis, Rate

Schedule SJ–1. The rate was approved on an interim basis through June 30, 1999, and is subject to confirmation and approval by the Federal Regulatory Commission on a final basis.

**DATES:** Approval of rate on an interim basis is effective through June 30, 1999.

**FOR FURTHER INFORMATION CONTACT:** Leon Jourolmon, Assistant Administrator, Finance & Marketing, Southeastern Power Administration, Department of Energy, Samuel Elbert Building, 2 South Public Square, Elberton, Georgia 30635–2496, (706) 213–3800.

**SUPPLEMENTARY INFORMATION:** The Federal Energy Regulatory Commission by Order issued December 14, 1994, in Docket No. EF94–3021–000, confirmed and approved Wholesale Power Rate Schedules CC–1–D, CM–1–C, CEK–1–C, CSI–1–C, CTV–1–C, CK–1–C, and CBR–1–C through June 30, 1999. This order includes the Wholesale Power Rate Schedule SJ–1 for the sale of power from the Stonewall Jackson Project.

Issued in Washington, D.C., April 24, 1997.

**Charles B. Curtis,**

*Deputy Secretary.*

**Department of Energy**

**Deputy Secretary**

**[Rate Order No. SEPA–36]**

**Southeastern Power Administration—Cumberland System Power Rates, Order Confirming and Approving Power Rates on an Interim Basis**

Pursuant to Sections 302(a) and 301(b) of the Department of Energy Organization Act, Pub. L. 95–91, the functions of the Secretary of the Interior and the Federal Power Commission under Section 5 of the Flood Control Act of 1944, 16 USC 825s, relating to the Southeastern Power Administration (Southeastern) were transferred to and vested in the Secretary of Energy. By Delegation Order No. 0204–108, effective May 30, 1986, 51 FR 19744 (May 30, 1986), the Secretary of Energy delegated to the Administrator the authority to develop power and transmission rates, and delegated to the Under Secretary the authority to confirm, approve, and place in effect such rates on an interim basis, and delegated to the Federal Energy Regulatory Commission (FERC) the authority to confirm and approve on a final basis or to disapprove rates developed by the Administrator under the delegation. On November 4, 1993, the Secretary of Energy issued Amendment No. 3 to Delegation Order No. 0204–108, granting the Deputy Secretary authority to confirm, approve, and place into effect Southeastern's rates on an interim basis. This rate is issued by the Deputy Secretary pursuant to said notice.

**Background**

Power from the Cumberland System is presently sold under Wholesale Power Rate Schedules CC–1–D, CM–1–C, CEK–1–C, CSI–1–C, CTV–1–C, CK–1–C, and CBR–1–C. These rate schedules were approved by the FERC on December 14, 1994, for a period ending June 30, 1999.

*Public Notice and Comment*

Southeastern prepared a Power Repayment Study dated October 1996 for the Cumberland System which showed that revenues at current rates and including the proposed Stonewall Jackson Projects rate were adequate to meet repayment criteria. On August 26, 1996, by **Federal Register** Notice 61 FR 43760, Southeastern proposed to include the Stonewall Jackson Project in the Cumberland System. The Notice also gave the opportunity for review and comment, with a deadline for the written comments on September 27, 1996. Southeastern received no written comments.

**Discussion**

*System Repayment*

An examination of Southeastern's revised system power repayment study, prepared in October 1996, for the Cumberland System shows that with the proposed rates, all system power costs are paid within the 50-year repayment period required by existing law and DOE Procedure RA 6120.2. The Administrator of Southeastern has certified that the rates are consistent with applicable law and that they are the lowest possible rates to customers consistent with sound business principles.

*Environmental Impact*

Southeastern has reviewed the possible environmental impacts of the rate adjustment under consideration and has concluded that, because the adjusted rate would not significantly affect the quality of the human environment within the meaning of the National Environmental Policy Act of 1969, the proposed action is not a major Federal action for which preparation of an Environmental Impact Statement is required.

*Availability of Information*

Information regarding these rates, including studies, and other supporting materials is available for public review in the offices of Southeastern Power Administration, Samuel Elbert Building, 2 South Public Square, Elberton, Georgia 30635, and in the Power Marketing Liaison Office, James Forrestal Building, 1000 Independence Avenue, SW., Washington, DC 20585.

*Submission to the Federal Energy Regulatory Commission*

The rate hereinafter confirmed and approved on an interim basis, together with supporting documents, will be submitted promptly to the Federal Energy Regulatory Commission for confirmation and approval on a final basis ending no later than June 30, 1999.

**Order**

In view of the foregoing and pursuant to the authority delegated to me by the Secretary of Energy, I hereby confirm and approve on an interim basis, attached Wholesale Power Rate Schedule SJ–1. The Rate Schedule shall remain in effect on an interim basis through June 30, 1999, or until the FERC confirms and approves it or a substitute rate schedules on a final basis. By my action, I also approve, on an interim basis, the inclusion of the Stonewall Jackson Project into the Cumberland System of Projects for rate and repayment purposes.

Issued in Washington, D.C., April 24, 1997.

**Charles B. Curtis,**

*Deputy Secretary.*

[FR Doc. 97–11447 Filed 5–1–97; 8:45 am]

BILLING CODE 6450–01–P

## ENVIRONMENTAL PROTECTION AGENCY

**[ER–FRL–5479–8]**

## Environmental Impact Statements and Regulations; Availability of EPA Comments

Availability of EPA comments prepared April 14, 1997 Through April 18, 1997 pursuant to the Environmental Review Process (ERP), under Section 309 of the Clean Air Act and Section 102(2)(c) of the National Environmental Policy Act as amended. Requests for copies of EPA comments can be directed to the Office of Federal Activities at (202) 564–7167.

An explanation of the ratings assigned to draft environmental impact statements (EISs) was published in FR dated April 4, 1997 (62 FR 16154).

**Draft EISs**

*ERP No. D–AFS–K65195–CA* Rating EC2, Desolation Wilderness Management Guidelines Revisions for the Eldorado National Forest and the Lake Tahoe Basin Management Unit (LTBMU), Limits of Acceptable Change (LAC), Eldorado County, CA.

*Summary:* EPA expressed environmental concern with alternatives that do not promote restoring areas currently exceeding standards set for the Desolation Wilderness. EPA recommended including the closure of the Rockbound grazing allotment in its preferred alternative.

*ERP No. D–AFS–L65281–ID* Rating EC2, White Pine Creek Salvage Timber Sale, Implementation, Clearwater National Forest, Palouse Ranger District, Benewah and Latah Counties, ID.

*Summary:* EPA expressed environmental concerns that implementation of best management practices and associated mitigation measures may not ensure protection of beneficial uses downstream of the project area.

*ERP No. D–FHW–E40771–NC* Rating EO2, Wilmington Bypass Transportation Improvements, US 17 to US 421,

Funding, COE Section 10 and 404 Permits and US Coast Guard Bridge Permit Issuance, Burnswick and New Hanover Counties, NC.

*Summary:* EPA had environmental objections or concerns with all four alternatives evaluated in detail. Alternatives 2 and 3 have greater wetlands impact and occupy Red-cockaded woodpecker forage areas. All alternatives would impact adversely a minority/low-income community at the interchange with US 17. EPA requested additional mitigation for secondary impacts and wetland losses.

*ERP No. D–FHW–E40772–AL* Rating EC2, Industrial Parkway Connector Project, Transportation Improvement, from Lott Road (AL–217) to US 45, Funding, COE Section 404 Permit and NPDES Permit, Mobile County, AL.

*Summary:* EPA expressed environmental concerns that wetlands and forested areas be avoided. Details on wetland mitigation are needed in final EIS.

*ERP No. D–FHW–L40202–WA* Rating EO2, I–5 Toutle Park Road to Maytown, Transportation Improvements, Funding, COE Section 404 Permit, US Coast Guard and NPDES Permits, Cowlitz, Lewis and Thurston Counties, WA.

*Summary:* EPA expressed environmental objection related to the structuring of the draft EIS as a project-specific document. Based on EPA's early participation in the development of the project tiered documents would be used in support of specific projects as they come on-line. EPA does not believe the present document provides sufficient information to adequately disclose the potentially significant impacts from the project and serve as the sole NEPA documentation for the entire 42.5 mile project. EPA believed that additional information and technical analyses related to alternatives, wetlands, avoidance/impacts/mitigation, floodplain impacts, surface and groundwater impacts, and indirect/secondary/cumulative effects are needed.

*ERP No. D–NPS–L65277–WA* Rating LO, Lake Crescent Management Plan, Implementation, Olympic National Park, WA.

*Summary:* Our abbreviated review has revealed no EPA concerns on this project.

*ERP No. DS–FHW–E40758–NC* Rating EO2, Wilmington Bypass Transportation Improvement Program, Updated Information, Construction from I–40 to US 421, Funding, NPDES and U.S. Coast Guard, and COE Section 10 and 404 Permits, New Hanover County, NC.

*Summary:* EPA expressed environmental objections to the Southern Alternative because it would impact more wetlands, relocate more than twice as many residents, and has more noise impacts. However, EPA also recognizes the Center Alternative may have greater impact to low income and minority communities. The Document also is deficient in providing wetlands mitigation.

**Final EISs**

*ERP No. F–AFS–E61037–TN* Upper Ocoee River Corridor Land and Water-Based Recreational Development, Implementation, Cherokee National Forest, Ocoee Ranger District, Polk County, TN.

*Summary:* EPA expressed environmental concerns with increased traffic and its potential impacts.

*ERP No. F–NPS–C61009–NY* Manhattan Sites General Management Plans, Implementation, Castle Clinton National Monument, Federal Hall National Memorial, General Grant National Memorial, Saint Paul's Church National Historic Site and Theodore Roosevelt Birthplace National Historic Site, New York and Westchester Counties, NY.

*Summary:* EPA determinate that it had no objections to the proposed project.

Dated: April 29, 1997.

**William D. Dickerson,**

*Director, NEPA Compliance Division, Office of Federal Activities.*

[FR Doc. 97–11474 Filed 5–1–97; 8:45 am]

BILLING CODE 6560–50–P

---

## ENVIRONMENTAL PROTECTION AGENCY

**[ER–FRL–5479–7]**

## Environmental Impact Statements; Notice of Availability

Responsible Agency: Office of Federal Activities, General Information (202) 564–7167 OR (202) 564–7153.

Weekly receipt of Environmental Impact Statements Filed April 21, 1997 Through April 25, 1997 Pursuant to 40 CFR 1506.9.

*EIS No. 970152,* Draft EIS, AFS, CA, Canyons Project, Implementation, Truckee Ranger District, Tahoe National Forest, Sierra and Nevada Counties, CA, *Due:* June 23, 1997, *Contact:* Caryn Hunter (916) 587–3558.

*EIS No. 970153,* Final EIS, GSA, MD, U.S. Food and Drug Administration (FDA) Consolidation of the following: Center for Drug Evaluation and Research (CDER), Center for Devices and Radiological Health (CDRH), Center for Biologics Evaluation and Research (CBER) and Office of Commissioner (OC), Site Selection, White Oak Naval Surface Weapons Center, Montgomery, MD, *Due:* June 09, 1997, *Contact:* Jag Bhargava (202) 708–7248.

*EIS No. 970154,* Draft EIS, AFS, MT, Poorman Project, Implementation, Harvesting and Road Construction, Helena National Forest, Lincoln Ranger District, Lewis and Clark County, MT, *Due:* June 23, 1997, *Contact:* Thomas J. Andersen (406) 449–5201.

*EIS No. 970155,* Draft EIS, AFS, CA, Damon Fire Salvage and Restoration Project, Implementation, Modoc National Forest, Modoc County, CA, *Due:* June 23, 1997, *Contact:* Paul Bailey (916) 233–5811.

*EIS No. 970156,* Draft EIS, NRCS, OK, Middle Deep Red Run Creek Watershed Plan, Implementation, Funding and Possible COE Section 404 Permit, Central Rolling Red Plains, Tillman, Comanche and Kiowa Counties, OK, *Due:* June 23, 1997, *Contact:* Ronnie L. Clark (405) 742–1200.

*EIS No. 970157,* Final EIS, AFS, NV, Griffon Mining Project, Implementation, Issuance Plan of Operations Approval, Humboldt-Toiyabe National Forests, Ely Ranger District, White Pine County, NV, *Due:* June 09, 1997, *Contact:* David Valenzaela (702) 289–3031.

*EIS No. 970158,* Final EIS, FTA, TX, North Central Corridor Light Rail Transit (LRT) Extension, Transportation Improvements, Funding, NPDES Permit and COE Section 404 Permit, Dallas and Collin Counties, TX, *Due:* June 09, 1997, *Contact:* Jesse Balleza (817) 860–9663.

Dated: April 29, 1997.

**William D. Dickerson.**

*Director, NEPA Compliance Division, Office of Federal Activities.*

[FR Doc. 97–11475 Filed 5–1–97; 8:45 am]

BILLING CODE 6560–50–U

---

## ENVIRONMENTAL PROTECTION AGENCY

**[FRL–5820–5]**

## Common Sense Initiative Council (CSIC)

**AGENCY:** Environmental Protection Agency (EPA).

**ACTION:** Notification of public advisory csic printing, metal finishing, and computers and electronics sector subcommittee open meetings.

**SUMMARY:** Pursuant to the Federal Advisory Committee Act, Pub. L. 92–463, notice is hereby given that the Printing, Computers and Electronics, and Metal Finishing Sector Subcommittees of the Common Sense Initiative Council will meet on the dates and times described below. All meetings are open to the public. Seating at all three meetings will be on a first-come basis and limited time will be provided for public comment. For further information concerning specific meetings, please contact the individuals listed with the three announcements below.

**(1) Printing Sector Subcommittee—May 20 and 21, 1997**

Notice is hereby given that the Environmental Protection Agency will hold an open meeting of the Printing Sector Subcommittee on Tuesday, May 20, 1997, from 1 p.m. EDT until 5 p.m. EDT and on Wednesday, May 21, 1997, from 8:30 a.m. EDT until noon EDT. The Multi-media Flexible Permitting Team and the New York City Education Project Team will hold workgroup meetings from 10 a.m. EDT to Noon EDT on Tuesday, May 20, 1997. If the Subcommittee members determine it is necessary for either or both of the teams to meet again following the subcommittee meeting, those workgroup meetings will take place on May 21, 1997, from approximately 1:30 p.m. EDT to 3:30 p.m. EDT. The Subcommittee and Multi-Media Flexible Permit Project Workgroup Meetings will be held at the Helen Dwight Reid Education Foundation, 1319 Eighteenth Street, NW., Washington, DC. The telephone number is (202) 296–6267. The New York City Education Project Team (NYCEPT) will meet in room 208 of the Canterbury Hotel, 1733 N Street, NW., Washington, DC. The telephone number is 202–393–3000.

The purpose of the Subcommittee meeting is to discuss the continued progress of the two project teams. The NYCEPT will be reporting on project developments in technical assistance and community involvement. The Multi-media Flexible Permit Project Team will be reporting on the results of exploring major sources, public participation, and thresholds for the proposed permit.

For further information concerning this Printing Sector Subcommittee meeting, please contact either Frank Finamore, Designated Federal Officer (DFO), at EPA, by telephone on (202) 564–7039, or Mick Kulik, Alternate DFO, at EPA Region 3 in Philadelphia, PA on (215) 566–5337.

**(2) Metal Finishing Sector Subcommittee—June 2 and 3, 1997**

Notice is hereby given that the Environmental Protection Agency will hold an open meeting of the Metal Finishing Sector Subcommittee on Monday, June 2, and Tuesday, June 3, 1997, at the Washington Marriott Hotel, 1221 22nd Street, NW., Washington, DC. The hotel is located at the corner of 22nd and M Streets, NW. The telephone number is 202–872–1500. The Subcommittee will meet both days from approximately 9 a.m. EDT to approximately 4 p.m. EDT.

It is anticipated that most of the Subcommittee meeting will focus on the Metal Finishing Sector's Strategic Goals Initiative. During this time, there will likely be breakout sessions for different stakeholder groups to discuss the Sector's Strategic Goals. It is further anticipated that there will be breakout sessions during these two days to allow workgroups to discuss ongoing Research and Technology, Regulatory and Reporting, and Performance Tier-Oriented projects. A formal agenda will be available after May 12, 1997.

For further information concerning meeting times and agenda of the Metal Finishing Sector Subcommittee, please contact Bob Benson, DFO, at EPA by telephone on (202) 260–8668 in Washington, DC, by fax on (202) 260–8662, or by e-mail at benson.robert@epamail.epa.gov.

**(3) Computers and Electronics Sector Subcommittee—June 4 and 5, 1997**

Notice is hereby given that the Environmental Protection Agency will hold an open meeting of the Computers and Electronics Sector Subcommittee on Wednesday, June 4, 1997, from 8:30 a.m. EDT until 5 p.m. EDT and on Thursday, June 5, 1997, from 8:30 a.m. EDT to 3 p.m. EDT, at the DuPont Plaza Hotel, 1500 New Hampshire Avenue, Washington, DC 20036.

Both days, June 4 and 5, will be devoted partly to breakout sessions for the three subcommittee workgroups (Reporting and Information Access; Overcoming Barriers to Pollution Prevention, Product Stewardship, and Recycling; and Integrated and Sustainable Alternative Strategies for Electronics) and partly to plenary sessions. Over the course of the two days, the Subcommittee will be discussing management of consumer electronics product recycling and recovery; alternative strategies for environmental protection in the computers and electronics industry, regulatory barriers to cathode ray tube (CRT) recycling; barriers to closed-loop water recycling in the electronics industry; and CURE—a new streamlined, consolidated, electronic reporting system. Opportunity for public comment on major issues under discussion will be provided at intervals throughout the meeting.

For further information concerning this meeting of the Common Sense Initiative's Computers and Electronics Sector Subcommittee, please contact John J. Bowser, Acting DFO, U.S. EPA on (202) 260–1771, by fax on (202) 260–1096, by e-mail at bowser.john@epamail.epa.gov., or by mail at U.S. EPA (MC 7405), 401 M Street, S.W., Washington, DC 20460; Mark Mahoney, U.S. EPA Region 1 on (617) 565–1155; or David Jones, Region 9, U.S. EPA on (415) 744–2266.

**Inspection of Subcommittee Documents:**

Documents relating to the above Sector Subcommittee announcements, will be publicly available at the meeting. Thereafter, these documents, together with the official minutes for the meetings, will be available for public inspection in room 2821M of EPA Headquarters, Common Sense Initiative Staff, 401 M Street, SW., Washington, DC 20460, telephone number 202–260–7417. Common Sense Initiative information can be accessed electronically through contacting Daria Willis at willis.daria@epamail.epa.gov.

Dated: April 28, 1997.

**Kathleen Bailey,**

*Designated Federal Officer.*

[FR Doc. 97–11494 Filed 5–1–97; 8:45 am]

BILLING CODE 6560–50–P

---

## ENVIRONMENTAL PROTECTION AGENCY

**[AD–FRL–5820–1]**

## Industrial Combustion Coordinated Rulemaking Advisory Coordinating Committee Notice of Upcoming Meeting

**AGENCY:** Environmental Protection Agency (EPA).

**ACTION:** Industrial Combustion Coordinated Rulemaking (ICCR) Federal Advisory Committee notice of upcoming meeting.

**SUMMARY:** As required by section 9(a)(2) of the Federal Advisory Committee Act (FACA), 5 U.S.C. App. 2, section 9(c), EPA gave notice of the establishment of the ICCR Federal Advisory Committee (hereafter referred to as the Coordinating Committee) in the **Federal Register** on August 2, 1996 (61 FR 40413).

The public can follow the progress of the ICCR through attendance at

meetings (which will be announced in advance) and by accessing the Technology Transfer Network (TTN), which serves as the primary means of disseminating information about the ICCR.

**DATES:** The next meeting of the Coordinating Committee is scheduled for May 21, 1997. Further information on the Coordinating Committee may be obtained by accessing the TTN.

**ADDRESSES:** The Coordinating Committee meeting on May 21, 1997 will be held at the Regal University Hotel, 2800 Campus Walk Avenue, Durham, North Carolina (919–383–8575).

*Inspection of Documents: Docket.* Minutes of the meetings, as well as other relevant materials, will be available for public inspection at U.S. EPA Air and Radiation Docket and Information Center, Docket No. A–96–17. The docket is open for public inspection and copying between 8 a.m. and 4 p.m., Monday through Friday except for Federal holidays, at the following address: U.S. Environmental Protection Agency, Air and Radiation Docket and Information Center (6102), 401 M Street SW., Washington, DC 20460; telephone: (202) 260–7548. The docket is located at the above address in Room M–1500, Waterside Mall (ground floor). A reasonable fee may be charged for copying.

**FOR FURTHER INFORMATION CONTACT:** Fred Porter or Sims Roy, U.S. Environmental Protection Agency, Emission Standards Division, Combustion Group, (MD–13), Research Triangle Park, NC 27711, telephone numbers (919) 541–5251 and 541–5263, respectively.

**SUPPLEMENTARY INFORMATION:**

## Technology Transfer Network (TTN)

The TTN is one of the EPA's electronic bulletin boards. The TTN can be accessed through the Internet at:

FTP: ttnftp.rtpnc.epa.gov
WWW: ttnwww.rtpnc.epa.gov

When accessing the WWW site, select TTN BBS Web from the first menu, then select Gateway to Technical Areas from the second menu, and finally, select ICCR-Industrial Combustion Coordinated Rulemaking from the third menu.

Access to the TTN through FTP is a streamlined approach for downloading files, but is only useful, if the desired filenames are known.

If more information on the TTN is needed, call the help desk at (919) 541–5384.

All Coordinating Committee meetings will be announced in the **Federal Register**. Work Group meetings will be announced on the TTN. Individuals interested in Work Group meetings, or any aspect of the ICCR for that matter, should access the TTN on a regular basis for information.

Two copies of the Coordinating Committee charter are filed with appropriate committees of Congress and the Library of Congress and are available upon request to the Docket (ask for item B–1). The purpose of the Coordinating Committee is to assist EPA in the development of regulations to control emissions of air pollutants from industrial, commercial, and institutional combustion of fuels and non-hazardous solid wastes. The Coordinating Committee will attempt to develop recommendations for national emission standards for hazardous air pollutants (NESHAP) implementing section 112 and solid waste combustion regulations implementing section 129 of the Act, and may review and make recommendations for revising and developing new source performance standards (NSPS) under section 111 of the Act. The recommendations will cover boilers, process heaters, industrial/commercial and other incinerators, stationary internal combustion engines, and stationary combustion turbines.

The lists of Coordinating Committee and Work Group members are available from the TTN for the purpose of giving the public the opportunity to contact members to discuss concerns or information they would like to bring forward during the ICCR process.

The next meeting of the Coordinating Committee will be held May 21, 1997 at the Regal University Hotel located at 2800 Campus Walk Avenue, Durham, North Carolina from about 8:30 a.m. to about 6 p.m.; an evening session may be held on May 21. The agenda for this meeting will include reports from the Work Groups on their progress and planning, discussion of data gathering efforts to support the ICCR, and a discussion of direction and guidance from the Coordinating Committee to the Work Groups. This meeting will also be open to the public, and an opportunity will be provided for the public to offer comments and address the Coordinating Committee.

It is anticipated that the next meeting of the Coordinating Committee, following the meeting in May, will be July 22 and 23, 1997 in Long Beach, California.

Dated: April 25, 1997.

**Mary D. Nichols,**

*Assistant Administrator for Air and Radiation.*

[FR Doc. 97–11489 Filed 5–1–97; 8:45 am]

BILLING CODE 6560–50–P

---

## ENVIRONMENTAL PROTECTION AGENCY

**[FRL–5820–6]**

## Science Advisory Board; Closed Meeting Notice

An ad hoc Subcommittee of the Science Advisory Board will meet at the US Environmental Protection Agency (EPA), Washington, DC, on May 29–30, 1997. Pursuant to Section 10(d) of the Federal Advisory Committee Act (FACA) and 5 U.S.C. 552(b)(c)(2) and 552(b)(c)(6), EPA has determined that the meeting will be closed to the public. The purpose of the meeting is to recommend to the Assistant Administrator of the Office of Research and Development (ORD) the recipients of the Agency's 1996 Scientific and Technological Achievement Cash Awards. These awards are established to honor and recognize EPA employees who have made outstanding contributions in the advancement of science and technology through their research and development activities, as exhibited in publication of their results in peer reviewed journals. In making these recommendations, including the actual cash amount of each award, the Agency requires full and frank advice from the Science Advisory Board. This advice will involve professional judgments on the relative merits of various employees and their respective work. Such personnel issues, where disclosure would constitute an unwarranted invasion of personal privacy, are protected from disclosure by exemptions 2 and 6 of Section 552(b)(c) of the USC In accordance with the provisions of the Federal Advisory Committee Act, minutes of the meeting will be kept for Agency and Congressional review. For more information, contact Mr. Robert Flaak, Team Leader, Committee Operations Staff, Science Advisory Board (1400), US Environmental Protection Agency, 401 M Street, SW., Washington, DC 20460, via telephone: (202) 260–5133 or via Email: flaak.robert@epamail.epa.gov

Dated: April 28, 1997.

**Carol M. Browner,**

*Administrator.*

[FR Doc. 97–11493 Filed 5–1–97; 8:45 am]

BILLING CODE 6560–50–P

## ENVIRONMENTAL PROTECTION AGENCY

**[FRL–5820–2]**

### Proposed Prospective Purchaser Agreement Under the Comprehensive Environmental Response, Compensation and Liability Act

**AGENCY:** Environmental Protection Agency.

**ACTION:** Notice of a prospective purchaser agreement and covenant not to sue the City of Vineland, New Jersey for a property within the Vineland Company Chemical superfund site.

**SUMMARY:** The United States Environmental Protection Agency (EPA) is proposing to enter into a Prospective Purchaser Agreement to provide the City of Vineland, New Jersey, a covenant not to sue under the Comprehensive Environmental Response Compensation and Liability Act of 1980 (CERCLA), as amended, in connection with its proposed purchase and development of a property related to Vineland Chemical Company. This agreement is intended to resolve a potentially responsible party's liability for certain response costs incurred by EPA at the Vineland Chemical Superfund Site in Vineland, New Jersey. Notice is being published to inform the public of the Proposed Prospective Purchaser Agreement and of the opportunity to comment.

**DATES:** Comments must be provided within 15 days of the publication of this notice.

**ADDRESSES:** Comments should be addressed to the US Environmental Protection Agency, Office of Regional Counsel, 290 Broadway—17th Floor, New York, NY 10007 and should refer to: In the Matter of the Vineland Chemical Company Superfund Site: The City of Vineland, New Jersey, U.S. EPA Index No. CERCLA–97–0103.

**FOR FURTHER INFORMATION CONTACT:** US Environmental Protection Agency, Office of Regional Counsel, 290 Broadway—17th Floor, New York, NY 10007, Attention: Virginia Curry, Esq. (212) 637–3134.

**SUPPLEMENTARY INFORMATION:** Notice is hereby given of a Proposed Prospective Purchaser Agreement with the City of Vineland, New Jersey resolving the City's potential liability for a property within the Vineland Chemical Company Superfund Site. CERCLA authorizes EPA to enter into this agreement. The Department of Justice approved this agreement pursuant to the inherent settlement authority of the Attorney General to settle claims of the United States.

A copy of the Proposed Prospective Purchaser Agreement, as well as background information relating to the agreement, may be obtained by mail from EPA's Region II Office of Regional Counsel, 290 Broadway—17th Floor, New York, NY 10007.

Proposed Prospective Purchaser Agreement under CERCLA—Vineland Chemical Company Superfund Site.

Dated: April 14, 1997.

**Jeanne M. Fox,**

*Regional Administrator.*

[FR Doc. 97–11490 Filed 5–1–97; 8:45 am]

BILLING CODE 6560–50–P

## ENVIRONMENTAL PROTECTION AGENCY

**[FRL–5819–9]**

### Notice of Proposed Administrative Order on Consent for Removal Action Under Sections 104, 106(a), 107, and 122 of the Comprehensive Environmental Response, Compensation, and Liability Act, Regarding the Vanguard Vinyl Siding, Inc. Site, Gloucester City, New Jersey

**AGENCY:** Environmental Protection Agency.

**ACTION:** Notice of proposed administrative order on consent for removal action and opportunity for public comment.

**SUMMARY:** In accordance with Section 122(i) of the Comprehensive Environmental Response, Compensation, and Liability Act, as amended (''CERCLA''), 42 USC § 9622(i), the U.S. Environmental Protection Agency (''EPA'') Region II announces a proposed Administrative Order on Consent for Removal Action under sections 104, 106(a), 107, and 122 of CERCLA, relating to the Vanguard Vinyl Siding, Inc. Site (''Site''), Gloucester City, New Jersey. This Site is not on the National Priorities List established pursuant to section 105(a) of CERCLA. This notice is being published to inform the public of the proposed Order and of the opportunity to comment.

The Administrative Order on Consent for Removal Action (the ''Order''), is being entered into by GAF Corporation (''GAF'') and EPA.

The Site occupies approximately two acres in an industrial section of Gloucester City, New Jersey, near the Delaware River.

GAF commercially produced asbestos-containing insulating products at the Site from 1967 to October 1971. In 1981, GAF sold the Site to Vanguard Vinyl Siding, Inc. The Site was abandoned in 1985 and is currently unoccupied.

The objective of this Order is to eliminate the threat of contact with asbestos posed at the Site. Under the Order, GAF will remediate three sources of asbestos on Site.

The first source of asbestos contamination at the Site is the asbestos that was stabilized during an initial removal action undertaken by EPA. This asbestos is currently double-bagged and staged inside a building on the Site. The second source of asbestos contamination is the asbestos materials inside a 10,000 gallon tank located in a courtyard. The third source is the asbestos contaminated soil in the courtyard.

GAF will dispose of the double-bagged asbestos currently staged inside the on-site building. GAF will also remove and dispose of the tank in the courtyard, or, will remove the asbestos from the tank, decontaminate the tank, and dispose of the asbestos. GAF will sample soil in the courtyard and surrounding the tank to determine the extent of soil containing more than 1 percent asbestos (''asbestos contaminated soil''). GAF will either: (1) Excavate, remove, and dispose of, or, (2) cap, asbestos contaminated soil situated in the courtyard. GAF will backfill any excavated areas with clean fill.

Under this Order, GAF agrees to reimburse EPA's past response costs in the amount of one hundred seventy-eight thousand dollars ($178,000.00). GAF will also reimburse EPA for future response costs, if any.

**DATES:** EPA will accept written comments relating to the proposed settlement for a period of thirty days from the date of publication of this notice.

**ADDRESSES:** Comments should be sent to: Delmar Karlen, Chief, New Jersey Superfund Branch, Office of Regional Counsel, U.S. Environmental Protection Agency, 290 Broadway, 17th Floor, New York, NY 10007–1866. Comments should reference the Vanguard Vinyl Siding, Inc. Site and EPA Index No. II–CERCLA–96–0107. For a copy of the Order, contact the individual listed below.

**FOR FURTHER INFORMATION CONTACT:** Carl R. Howard, Assistant Regional Counsel, New Jersey Superfund Branch, Office of Regional Counsel, U.S. Environmental Protection Agency, 290 Broadway, 17th Floor, New York, NY 10007–1866; Telephone: (212) 637–3216.

Dated: April 17, 1997.

**William J. Muszynski,**

*Acting Regional Administrator.*

[FR Doc. 97–11485 Filed 5–1–97; 8:45 am]

BILLING CODE 6560–50–P

## ENVIRONMENTAL PROTECTION AGENCY

**[OPPT–59358; FRL–5715–4]**

## Certain Chemicals; Approval of a Test Marketing Exemption

**AGENCY:** Environmental Protection Agency (EPA).

**ACTION:** Notice.

**SUMMARY:** This notice announces EPA's approval of an application for test marketing exemption (TME) under section 5(h)(1) of the Toxic Substances Control Act (TSCA) and 40 CFR 720.38. EPA has designated this application as TME–97–4. The test marketing conditions are described below.

**DATES:** This notice becomes effective April 24, 1997. Written comments will be received until May 19, 1997.

**ADDRESSES:** Written comments, identified by the docket control number [OPPT–59358] and the specific TME number should be sent to: TSCA nonconfidential center (NCIC), Office of Pollution Prevention and Toxics, Environmental Protection Agency, Rm. NEB-607 (7407), 401 M St., SW., Washington, D.C. 20460, (202) 554–1404, TDD (202) 554–0551.

Comments and data may also be submitted electronically by sending electronic mail (e-mail) to: ncic@epamail.epa.gov. Comments and data will also be accepted on disks in WordPerfect in 5.1 file format or ASCII file format. All comments and data in electronic form must be identified by [OPPT–59358]. No Confidential Business Information (CBI) should be submitted through e-mail. Electronic comments on this notice may be filed online at many Federal Depository Libraries.

**FOR FURTHER INFORMATION CONTACT:** Shirley D. Howard, New Chemicals Branch, Chemical Control Division (7405), Office of Pollution Prevention and Toxics, Environmental Protection Agency, Rm. E–611, 401 M St. SW., Washington, DC 20460, (202) 260–3780. e-mail: howard.sd@epamail.epa.gov.

**SUPPLEMENTARY INFORMATION:** Section 5(h)(1) of TSCA authorizes EPA to exempt persons from premanufacture notification (PMN) requirements and permit them to manufacture or import new chemical substances for test marketing purposes if the Agency finds that the manufacture, processing, distribution in commerce, use, and disposal of the substances for test marketing purposes will not present an unreasonable risk of injury to human health or the environment. EPA may impose restrictions on test marketing activities and may modify or revoke a test marketing exemption upon receipt of new information which casts significant doubt on its finding that the test marketing activity will not present an unreasonable risk of injury.

EPA hereby approves TME–97–4. EPA has determined that test marketing of the new chemical substance described below, under the conditions set out in the TME application, and for the time period and restrictions specified below, will not present an unreasonable risk of injury to human health or the environment. Production volume, use, and the number of customers must not exceed that specified in the application. All other conditions and restrictions described in the application and in this notice must be met.

A notice of receipt of this application was not published in advance of approval. Therefore, an opportunity to submit comments is being offered at this time. EPA may modify or revoke the test marketing exemption if comments are received which cast significant doubt on its finding that this test marketing activity will not present an unreasonable risk of injury.

The following additional restrictions apply to TME–97–4. A bill of lading accompanying each shipment must state that the use of the substance is restricted to that approved in the TME. In addition, the applicant shall maintain the following records until 5 years after the date they are created, and shall make them available for inspection or copying in accordance with section 11 of TSCA:

1. Records of the quantity of the TME substance produced and the date of manufacture.

2. Records of dates of the shipments to each customer and the quantities supplied in each shipment.

3. Copies of the bill of lading that accompanies each shipment of the TME substance.

### TME–97–4

*Date of Receipt:* March 21, l997. The extended comment period will close May 19, 1997.

*Applicant:* Reichhold Chemicals Inc.

*Chemical:* (G) Polyurethane Adhesive.

*Use:* (G) Hot melted adhesive.

*Production Volume:* Confidential.

*Number of Customers:* Confidential.

*Test Marketing Period: Confidential.* Commencing on first day of commercial manufacture.

*Risk Assessment:* EPA identified no significant health or environmental concerns for the test market substance. Therefore, the test market activities will not present any unreasonable risk of injury to human health or the environment.

The Agency reserves the right to rescind approval or modify the conditions and restrictions of an exemption should any new information that comes to its attention cast significant doubt on its finding that the test marketing activities will not present any unreasonable risk of injury to human health or the environment.

### List of Subjects

Environmental protection, test marketing exemptions.

Dated: April 24, 1997.

**Flora Chow,**

*Chief, New Chemicals Branch, Office of Pollution Prevention and Toxics.*

[FR Doc. 97–11508 Filed 5-1-97; 8:45 am]

BILLING CODE 6560–50–F

## FARM CREDIT ADMINISTRATION

## Sunshine Act Meeting; Farm Credit Administration Board; Regular Meeting

**AGENCY:** Farm Credit Administration.

**SUMMARY:** Notice is hereby given, pursuant to the Government in the Sunshine Act (5 U.S.C. 552b(e)(3)), that the May 8, 1997 regular meeting of the Farm Credit Administration Board (Board) will not be held.

**FOR FURTHER INFORMATION CONTACT:** Floyd Fithian, Secretary to the Farm Credit Administration Board, (703) 883–4025, TDD (703) 883–4444.

**ADDRESSES:** Farm Credit Administration, 1501 Farm Credit Drive, McLean, Virginia 22102–5090.

Dated: April 30, 1997.

**Floyd Fithian,**

*Secretary, Farm Credit Administration Board.*

[FR Doc. 97–11684 Filed 4–30–97; 2:46 pm]

BILLING CODE 6705–01–P

## FEDERAL COMMUNICATIONS COMMISSION

## Notice of Public Information Collections Submitted to OMB for Review and Approval

April 25, 1997.

**SUMMARY:** The Federal Communications Commission, as part of its continuing

effort to reduce paperwork burden invites the general public and other Federal agencies to take this opportunity to comment on the following proposed and/or continuing information collections, as required by the Paperwork Reduction Act of 1995, Public Law 104–13. An agency may not conduct or sponsor a collection of information unless it displays a currently valid control number. No person shall be subject to any penalty for failing to comply with a collection of information subject to the Paperwork Reduction Act (PRA) that does not display a valid control number. Comments are requested concerning (a) whether the proposed collection of information is necessary for the proper performance of the functions of the Commission, including whether the information shall have practical utility; (b) the accuracy of the Commissions burden estimates; (c)ways to enhance the quality, utility, and clarity of the information collected and (d) ways to minimize the burden of the collection of information on the respondents, including the use of automated collection techniques or other forms of information technology.

**DATES:** Written comments should be submitted on or before June 2, 1997. If you anticipate that you will be submitting comments, but find it difficult to do so within the period of time allowed by this notice, you should advise the contact listed below as soon as possible.

**ADDRESSES:** Direct all comments to Dorothy Conway, Federal Communications Commission, Room 234, 1919 M St., NW., Washington, DC 20554 or via internet to dconway@fcc.gov and Timothy Fain, OMB Desk Officer, 10236 NEOB 725 17th Street, NW., Washington, DC 20503 or fain__t@a1.eop.gov.

**FOR FURTHER INFORMATION CONTACT:** For additional information or copies of the information collections contact Dorothy Conway at 202–418–0217 or via internet at dconway@fcc.gov.

**SUPPLEMENTARY INFORMATION:**

*OMB Approval Number:* 3060–0407.

*Title:* Application for Extension of Broadcast Construction Permit or to Replace Expired Construction Permit.

*Form No.:* FCC 307 .

*Type of Review:* Revision of a currently approved collection.

*Respondents:* Business or other for-profit; not for profit institutions.

*Number of Respondents:* 1,500.

*Estimated Time Per Response:* .05 to 2.5 hours. 2.5 hours is the estimated completion time for respondents preparing the information. Thirty minutes is the estimated coordination time for respondents that hire an attorney to prepare the information.

*Total Annual Burden:* 2,550 hours.

*Total Costs to all Respondents:* $456,000.

*Needs and Uses:* FCC Form 307 is used by licensees/permitees of broadcast stations to request an extension of time to construct braodcast facility, or when applying for a construction permit to replace an expired permit. The application shall be filed at least 30 days prior to the expiration date of the construction permit if the facts supporting such application for extension are known to the applicant in time to permit such filing. In ohter cases, an application will be accepted upon a showing satisfactory to the FCC of sufficient reasons for filing within less than 30 days prior to the expiration date. The burden estimates for this collection differ from the estimates in the **Federal Register** notice for the 60 day comment period 62 FR 5827. The Commission had inadvertently overlooked low power television/instructional fixed television stations in the earlier estimate.

*OMB Approval Number:* 3060–0756.

*Title:* Procedural Requirements and Policies for Commission Processing of Bell Operating Company Applications for the Provision of In-Region, interLATA Services Under Section 271 of the Communications Act.

*Form No.:* N/A .

*Type of Review:* Extension of a currently approved collection .

*Respondents:* Business or other for-profit.

*Number of Respondents and Estimated Time Per Response:* Submission of Applications of Application by the BOC's will have 7 respondents @ 7 responses each . The estimated response time per application is 120 hours. Submission of Written Consultation by the State Regulatory Commissions will have 49 respondents at 120 hours per respondent. Submission of the Written Consolutation by the U.S. Department of Justice will require 100 hours per state.

*Total Annual Burden:* 18,160 hours.

*Total Costs to all Respondents:* $0.

*Needs and Uses:* This information collection includes public notices that establish various procedural requirements and policies relating to the Commission's processing of Bell Operating Company (BOC) applications to provide in-region, interLATA services pursuant to section 271 of the Communications Act of 1934, as amended. All the information will be used to ensure that BOC's have complied with their obligations under the Communications Act of 1934, as amended before being authorized to provide in-region, interLATA services pursuant to section 271.

Federal Communications Commission.

**William F. Caton,**

*Acting Secretary*

[FR Doc. 97–11395 Filed 5–1–97; 8:45 am]

BILLING CODE 6712–01–P

## FEDERAL COMMUNICATIONS COMMISSION

### Notice of Public Information Collection Submitted to OMB for Emergency Review and Approval

April 28, 1997.

**SUMMARY:** The Federal Communications Commission has requested Office of Management and Budget (''OMB'') approval, under the emergency processing provisions of the Paperwork Reduction Act of 1995, for the FCC Annual Survey of Cable Industry Prices (''1997 Price Survey''). OMB approval is requested to be effective no later than June 5, 1997. The Commission, as part of its continuing effort to reduce paperwork burden, invites the general public and other federal agencies to take this opportunity to comment on the following information collection, as required by the Paperwork Reduction Act of 1995, Public Law 104–13. Comments should address: (a) whether the proposed collection of information is necessary for the proper performance of the functions of the Commission, including whether the information shall have practical utility; (b) the accuracy of the Commission's burden estimates; (c) ways to enhance the quality, utility, and clarity of the information collected; and (d) ways to minimize the burden of the collection of information on the respondents, including the use of automated collection techniques or other forms of information technology.

**DATES:** Written comments should be submitted on or before June 2, 1997. If you anticipate that you will be submitting comments, but find it difficult to do so within the period of time allowed by this notice, you should advise the contact listed below as soon as possible.

**ADDRESSES:** Direct all comments to Timothy Fain, Office of Management and Budget, Room 10236 NEOB, Washington, DC 20503, 202–395–3561 or via internet at fain__t@al.eop.gov, and to Dorothy Conway, Federal Communications, Room 234, 1919 M

St., NW., Washington, DC 20554 or via internet to dconway@fcc.gov.

**FOR FURTHER INFORMATION CONTACT:** For copies of the proposed 1997 Price Survey contact Dorothy Conway at 202–418–0217 or via internet at dconway@fcc.gov. Copies may also be obtained by contacting the Commission's Fax on Demand System. To obtain fax copies, call 202–418–0177 from the handset on your fax machine, and enter the document retrieval number when prompted. The document retrieval number is 000647. The proposed 1997 Price Survey is also posted on the Commission's internet site at: http//www.fcc.gov/formpage.html. The internet posting can be accessed by downloading the Adobe Reader and then the 1997 Price Survey PDF file. For additional information concerning this information collection requirement contact Dr. Kiran Duwadi at 202–418–7200.

**SUPPLEMENTARY INFORMATION:** The Cable Television Consumer Protection and Competition Act of 1992 (''Cable Act'') requires the Commission to publish an annual statistical report on average rates for basic cable service, cable programming service and equipment. The report must compare the prices charged by cable systems subject to effective competition and those that are not subject to effective competition. The 1997 Price Survey is intended to collect the data needed to prepare this report. For the 1997 Price Survey, the Commission will provide the survey and receive responses by means of the internet. We will also provide diskette copies of the survey to respondents so that cable operators without internet access will have automated copies of the survey to complete. We will also provide paper versions of the survey to all respondents in the event that some respondents do not have access to the internet or a computer.

*OMB Approval Number:* 3060–0647.

*Type of Review:* Reinstatement, with change, of a previously approved collection.

*Respondents:* Business or other for-profit entities.

*Number of Respondents:* 635.

*Estimated Time Per Response:* 8 hours.

*Total Annual Burden to Respondents:* 5,080 hours. The Commission estimates that the average burden to respondents for gathering the data and completing and filing the 1997 Price Survey will be 8 hours. The survey will be sent to a total of 635 respondents. 635 responsesx8 hours=5,080 hours.

*Total Cost to Respondents:* $2,000. We estimate that a significant portion of respondents (an estimated 400 out of 635) will opt for the purchase of computer diskettes to complete the 1997 Price Survey. 400 respondents x $5 per diskette = $2,000.

*Needs and Uses:* The 1997 Price Survey will be distributed to randomly selected groups of competitive and noncompetitive cable systems. The data collected will be used by the Commission to monitor cable prices and to determine whether the goal of the Cable Act is being met; that goal being to ensure that rates charged for basic and cable programming services by cable operators not subject to effective competition are reasonable in comparison with rates charged by operators subject to effective competition. The results of the survey will be published in an annual report on cable industry prices.

Federal Communications Commission.

**William F. Caton,**

*Acting Secretary.*

[FR Doc. 97–11443 Filed 5–1–97; 8:45 am]

BILLING CODE 6712–10–P

## FEDERAL COMMUNICATIONS COMMISSION

**[CC Docket No. 92–237]**

## FCC Announces That May 14, 1997 Meeting of the North American Numbering Council Will Be Closed to the Public

**AGENCY:** Federal Communications Commission.

**ACTION:** Notice.

**SUMMARY:** On April 28, 1997, the Commission released a public notice announcing that the May 14, 1997, meeting of the North American Numbering Council (NANC) will be closed to the public. The May 14 meeting and its agenda had been announced in a public notice published in the **Federal Register** on March 28, 1997 (*See* 62 FR 14907). The intended effect of this action is to make the public aware that the May 14 NANC meeting will now be closed to the public, and only NANC members and FCC employees may attend.

**FOR FURTHER INFORMATION CONTACT:** Linda Simms, Administrative Assistant of the NANC, at (202) 418–2330. The address is: Network Services Division, Common Carrier Bureau, Federal Communications Commission, 2000 M Street, NW, Suite 235, Washington, DC 20054. The fax number is: (202) 418–2345. The TTY number is: (202) 418–0484.

**SUPPLEMENTARY INFORMATION:**

Released: April 28, 1997.

In response to NANC Chairman Al Hasselwander's request, FCC Chairman Reed Hundt, in a letter dated April 25, 1997, determined, ''after review by the General Counsel, that the May 14 meeting of the NANC may be closed to the public.'' In making this determination, Chairman Hundt stated:

> Given that the NANC's review, at the meeting, of proposals for the North American Numbering Plan Administrator is likely to involve disclosure of 'trade secrets and commercial or financial information obtained from a person and privileged or confidential,' the May 14 meeting is subject to the Government in Sunshine Act's allowance for closure of meetings otherwise required to be open to the public. *See* GISA Section 552b(c)(4). Under the Federal Advisory Committee Act, 5 U.S.C., App. 2 (1988) (FACA), the requirement that Federal Advisory Committee meetings be open to the public is, therefore, not applicable to the May 14 meeting of the NANC. *See* FACA Section 10(d).

### Agenda

At the May 14, 1997, NANC meeting, the NANC will review the proposals submitted by respondents to the Requirements Document for the North American Numbering Plan Administrator. This review will assist the NANC in its final review of the recommendation for selection of a North American Numbering Plan Administrator.

Federal Communications Commission.

**Geraldine A. Matise,**

*Chief, Network Services Division, Common Carrier Bureau.*

[FR Doc. 97–11444 Filed 5–1–97; 8:45 am]

BILLING CODE 6712–01–P

## FEDERAL DEPOSIT INSURANCE CORPORATION

### Sunshine Act Meeting

Pursuant to the provisions of the ''Government in the Sunshine Act'' (5 U.S.C. 552b), notice is hereby given that the Federal Deposit Insurance Corporation's Board of Directors will meet in open session at 10:00 a.m. on Tuesday, May 6, 1997, to consider the following matters:

*Summary Agenda:* No substantive discussion of the following items is anticipated. These matters will be resolved with a single vote unless a member of the Board of Directors requests that an item be moved to the discussion agenda.

Memorandum and resolution re:

Statement of Policy on Interagency

Coordination of Bank Holding Company Inspections and Subsidiary Bank Examinations.

*Discussion Agenda:*

Memorandum and resolution re: BIF Assessment Rates for the Second Semiannual Assessment Period of 1997.

Memorandum and resolution re: SAIF Assessment Rates for the Second Semiannual Assessment Period of 1997.

Memorandum re: FICO Assessment.

The meeting will be held in the Board Room on the sixth floor of the FDIC Building located at 550—17th Street, N.W., Washington, D.C.

The FDIC will provide attendance attendees with auxiliary aids (e.g., sign language interpretation) required for this meeting. Those attendees needing such assistance should call (202) 416–2449 (Voice); (202) 416–2004 (TTY), to make necessary arrangements.

Requests for further information concerning the meeting may be directed to Mr. Robert E. Feldman, Deputy Executive Secretary of the Corporation, at (202) 898–6757.

Dated: April 29, 1997.

Federal Deposit Insurance Corporation

**Robert E. Feldman,**

*Deputy Executive Secretary.*

[FR Doc. 97–11610 Filed 4–30–97; 11:27 am]

BILLING CODE 6714–01–M

## FEDERAL DEPOSIT INSURANCE CORPORATION

### Sunshine Act Meeting

Pursuant to the provisions of the ''Government in the Sunshine Act'' (5 U.S.C. 552b), notice is hereby given that at 10:58 a.m. on Tuesday, April 29, 1997, the Board of Directors of the Federal Deposit Insurance Corporation met in closed session to consider matters relating to the Corporation's corporate and supervisory activities.

In calling the meeting, the Board determined, on motion of Vice Chairman Andrew C. Hove, Jr., seconded by Mr. John F. Downey, acting in the place and stead of Director Nicolas P. Retsinas (Director, Office of Thrift Supervision), concurred in by Director Joseph H. Neely (Appointive), Ms. Judith A. Walter, acting in the place and stead of Director Eugene A. Ludwig (Comptroller of the Currency), and Chairman Rickie Helfer, that Corporation business required its consideration of the matters on less than seven days' notice to the public; that no earlier notice of the meeting was practicable; that the public interest did not require consideration of the matters in a meeting open to public observation; and that the matters could be considered in a closed meeting by authority of subsections (c)(2), (c)(4), (c)(6), (c)(8), and (c)(9)(A)(ii) of the ''Government in the Sunshine Act'' (5 U.S.C. 552b (c)(2), (c)(4), (c)(6), (c)(8), (c)(9)(A)(ii)).

The meeting was held in the Board Room of the FDIC Building located at 550—17th Street, NW., Washington, DC.

Dated: April 29, 1997.

Federal Deposit Insurance Corporation.

**Valerie J. Best,**

*Assistant Executive Secretary.*

[FR Doc. 97–11611 Filed 4–30–97; 11:27 am]

BILLING CODE 6714–01–M

## FEDERAL HOUSING FINANCE BOARD

### Sunshine Act Meeting; Announcing an Open Meeting of the Board

*Time and Date:* 10: am. Wednesday, May 7, 1997.

*Place:* Board Room, Second Floor, Federal Housing Finance Board, 1777 F Street, NW., Washington, DC. 20006.

*Status:* The entire meeting will be open to the public.

*Matter to be Considered During Portions Open to the Public:*

- Community Support Revisions—Final Rule
- Community Investment—Cash Advance Proposed Rulemaking

*Contact Person for More Information:* Elaine L. Baker, Secretary to the Board, (202) 408–2837.

**William W. Ginsberg,**

*Managing Director.*

[FR Doc. 97–11687 Filed 4–30–97; 3:19 pm]

BILLING CODE 6725–01–P

## FEDERAL RESERVE SYSTEM

### Change in Bank Control Notices; Acquisitions of Shares of Banks or Bank Holding Companies

The notificants listed below have applied under the Change in Bank Control Act (12 U.S.C. 1817(j)) and § 225.41 of the Board's Regulation Y (12 CFR 225.41) to acquire a bank or bank holding company. The factors that are considered in acting on the notices are set forth in paragraph 7 of the Act (12 U.S.C. 1817(j)(7)).

The notices are available for immediate inspection at the Federal Reserve Bank indicated. Once the notices have been accepted for processing, they will also be available for inspection at the offices of the Board of Governors. Interested persons may express their views in writing to the Reserve Bank indicated for that notice or to the offices of the Board of Governors. Comments must be received not later than May 16, 1997.

**A. Federal Reserve Bank of Chicago** (Philip Jackson, Applications Officer) 230 South LaSalle Street, Chicago, Illinois 60690-1413:

*1. John William Corley*, Monticello, Illinois; to retain a total of 27.9 percent of the voting shares of First State Bancorp of Monticello, Inc., Monticello, Illinois, and thereby indirectly retain State Bank of Hammond, Hammond, Illinois; First State Bank of Monticello, Monticello, Illinois; First State Bank of Bloomington, Bloomington, Illinois; First State Bank of Heyworth, Heyworth, Illinois; and First State Bank of Atwood, Atwood, Illinois.

Board of Governors of the Federal Reserve System, April 28, 1997.

**Jennifer J. Johnson,**

*Deputy Secretary of the Board.*

[FR Doc. 97–11423 Filed 5–1–97; 8:45 am]

BILLING CODE 6210–01–F

## FEDERAL RESERVE SYSTEM

### Formations of, Acquisitions by, and Mergers of Bank Holding Companies

The companies listed in this notice have applied to the Board for approval, pursuant to the Bank Holding Company Act of 1956 (12 U.S.C. 1841 *et seq.*) (BHC Act), Regulation Y (12 CFR Part 225), and all other applicable statutes and regulations to become a bank holding company and/or to acquire the assets or the ownership of, control of, or the power to vote shares of a bank or bank holding company and all of the banks and nonbanking companies owned by the bank holding company, including the companies listed below.

The applications listed below, as well as other related filings required by the Board, are available for immediate inspection at the Federal Reserve Bank indicated. Once the application has been accepted for processing, it will also be available for inspection at the offices of the Board of Governors. Interested persons may express their views in writing on the standards enumerated in the BHC Act (12 U.S.C. 1842(c)). If the proposal also involves the acquisition of a nonbanking company, the review also includes whether the acquisition of the nonbanking company complies with the standards in section 4 of the BHC Act. Unless otherwise noted, nonbanking activities will be conducted throughout the United States.

Unless otherwise noted, comments regarding each of these applications must be received at the Reserve Bank indicated or the offices of the Board of Governors not later than May 27, 1997.

**A. Federal Reserve Bank of San Francisco** (Pat Marshall, Manager of Analytical Support, Consumer Regulation Group) 101 Market Street, San Francisco, California 94105-1579:

*1. First Security Corporation*, Salt Lake City, Utah; to merge with American Bancorp of Nevada, Inc., Las Vegas, Nevada, and thereby indirectly acquire American Bank of Commerce, Las Vegas, Nevada.

Board of Governors of the Federal Reserve System, April 28, 1997.

**Jennifer J. Johnson,**

*Deputy Secretary of the Board.*

[FR Doc. 97–11424 Filed 5–1–97; 8:45 am]

BILLING CODE 6210–01–F

## FEDERAL RESERVE SYSTEM

### Formations of, Acquisitions by, and Mergers of Bank Holding Companies

The companies listed in this notice have applied to the Board for approval, pursuant to the Bank Holding Company Act of 1956 (12 U.S.C. 1841 *et seq.*) (BHC Act), Regulation Y (12 CFR Part 225), and all other applicable statutes and regulations to become a bank holding company and/or to acquire the assets or the ownership of, control of, or the power to vote shares of a bank or bank holding company and all of the banks and nonbanking companies owned by the bank holding company, including the companies listed below.

The applications listed below, as well as other related filings required by the Board, are available for immediate inspection at the Federal Reserve Bank indicated. Once the application has been accepted for processing, it will also be available for inspection at the offices of the Board of Governors. Interested persons may express their views in writing on the standards enumerated in the BHC Act (12 U.S.C. 1842(c)). If the proposal also involves the acquisition of a nonbanking company, the review also includes whether the acquisition of the nonbanking company complies with the standards in section 4 of the BHC Act. Unless otherwise noted, nonbanking activities will be conducted throughout the United States.

Unless otherwise noted, comments regarding each of these applications must be received at the Reserve Bank indicated or the offices of the Board of Governors not later than May 29, 1997.

**A. Federal Reserve Bank of Richmond** (A. Linwood Gill, III Assistant Vice President) 701 East Byrd Street, Richmond, Virginia 23261-4528:

*1. Community Capital Corporation*, Greenwood, South Carolina; to acquire 100 percent of the voting shares of The Bank of Newberry County, Newberry, South Carolina (in organization).

Board of Governors of the Federal Reserve System, April 29, 1997.

**Jennifer J. Johnson,**

*Deputy Secretary of the Board.*

[FR Doc. 97–11510 Filed 5-1-97; 8:45 am]

BILLING CODE 6210-01-F

## FEDERAL RESERVE SYSTEM

### Sunshine Act Meeting

**AGENCY HOLDING THE MEETING:** Board of Governors of the Federal Reserve System.

**TIME AND DATE:** 10:00 a.m., Wednesday, May 7, 1997.

**PLACE:** Marriner S. Eccles Federal Reserve Board Building, C Street entrance between 20th and 21st Streets, NW., Washington, DC 20551.

**STATUS:** Closed.

**MATTERS TO BE CONSIDERED:**

1. Personnel actions (appointments, promotions, assignments, reassignments, and salary actions) involving individual Federal Reserve System employees.

2. Any items carried forward from a previously announced meeting.

**CONTACT PERSON FOR MORE INFORMATION:** Mr. Joseph R. Coyne, Assistant to the Board; (202) 452–3204. You may call (202) 452–3207, beginning at approximately 5 p.m. two business days before this meeting, for a recorded announcement of bank and bank holding company applications scheduled for the meeting.

Dated: April 29, 1997.

**William W. Wiles,**

*Secretary of the Board.*

[FR Doc. 97–11544 Filed 4–29–97; 4:22 pm]

BILLING CODE 6210–01–P

## FEDERAL RESERVE SYSTEM

### Notice of Proposals to Engage in Permissible Nonbanking Activities or to Acquire Companies that are Engaged in Permissible Nonbanking Activities

The companies listed in this notice have given notice under section 4 of the Bank Holding Company Act (12 U.S.C. 1843) (BHC Act) and Regulation Y, (12 CFR Part 225) to engage *de novo*, or to acquire or control voting securities or assets of a company that engages either directly or through a subsidiary or other company, in a nonbanking activity that is listed in § 225.28 of Regulation Y (12 CFR 225.28) or that the Board has determined by Order to be closely related to banking and permissible for bank holding companies. Unless otherwise noted, these activities will be conducted throughout the United States.

Each notice is available for inspection at the Federal Reserve Bank indicated. Once the notice has been accepted for processing, it will also be available for inspection at the offices of the Board of Governors. Interested persons may express their views in writing on the question whether the proposal complies with the standards of section 4 of the BHC Act.

Unless otherwise noted, comments regarding the applications must be received at the Reserve Bank indicated or the offices of the Board of Governors not later than May 16, 1997.

**A. Federal Reserve Bank of Minneapolis** (Karen L. Grandstrand, Vice President) 250 Marquette Avenue, Minneapolis, Minnesota 55480-2171:

*1. Fishback Financial Corporation*, Brookings, South Dakota; to engage *de novo* in lending activities, pursuant to section 225.28(b)(1) of the Board's Regulation Y.

Board of Governors of the Federal Reserve System, April 25, 1997.

**Jennifer J. Johnson,**

*Deputy Secretary of the Board.*

[FR Doc. 97–11425 Filed 5–1–97; 8:45 am]

BILLING CODE 6210–01–F

## DEPARTMENT OF HEALTH AND HUMAN SERVICES

### Office of the Secretary

### Advisory Commission on Consumer Protection and Quality in the Health Care Industry; Notice of Meeting

In accordance with Section 10(a)(2) of the Federal Advisory Committee Act, Public Law 92–463, notice is hereby give of the meeting of the Advisory Commission on Consumer Protection and Quality in the Health Care Industry. This meeting will be open to the public, limited only by the space available.

*Place of Meeting:* Renaissance Mayflower Hotel, 1127 Connecticut Avenue, NW., Washington, DC 20036.

*Times and Dates:* 8:00 a.m. until 5:00 p.m., May 13, 1997.

*Purpose/Agenda:* To hear testimony and consider organizational matters relevant to the Commission. Agenda items are subject to change as priorities dictate.

*Contact Person for More Information:* Substantive program information as well as

summaries of the meeting and a roster of Commission members may be obtained from Edward (Chip) Malin, Room 118–F, Hubert H. Humphrey Building, 200 Independence Avenue, SW., Washington, DC 20201, telephone 202–205–3333.

Dated: April 28, 1997.

**Janet M. Corrigan,**

*Executive Director, Advisory Commission on Consumer Protection and Quality in the Health Care Industry.*

[FR Doc. 97–11438 Filed 5–1–97; 8:45 am]

BILLING CODE 4110–60–M

## DEPARTMENT OF HEALTH AND HUMAN SERVICES

### Centers for Disease Control and Prevention

**[INFO–97–09]**

### Proposed Data Collections Submitted for Public Comment and Recommendations

In compliance with the requirement of section 3506(c)(2)(A) of the Paperwork Reduction Act of 1995 for opportunity for public comment on proposed data collection projects, the Centers for Disease Control and Prevention (CDC) will publish periodic summaries of proposed projects. To request more information on the proposed projects or to obtain a copy of the data collection plans and instruments, call the CDC Reports Clearance Officer on (404) 639–7090.

Comments are invited on: (a) Whether the proposed collection of information is necessary for the proper performance of the functions of the agency, including whether the information shall have practical utility; (b) the accuracy of the agency's estimate of the burden of the proposed collection of information; (c) ways to enhance the quality, utility, and clarity of the information to be collected; and (d) ways to minimize the burden of the collection of information on respondents, including through the use of automated collection techniques for other forms of information technology. Send comments to Wilma Johnson, CDC Reports Clearance Officer, 1600 Clifton Road, MS–D24, Atlanta, GA 30333. Written comments should be received within 60 days of this notice.

**Proposed Projects**

1. Annual Submission of the Quantity of Nicotine Contained in Smokeless Tobacco Products Manufactured, Imported, or Packaged in the United States—New—Oral use of smokeless tobacco represents a significant health risk which can cause cancer and a number of noncancerous oral conditions, and can lead to nicotine addiction and dependence. The Centers for Disease Control and Prevention's (CDC) Office on Smoking and Health (OSH) has been delegated the authority for implementing major components of the Department of Health and Human Services' (HHS) tobacco and health program, including collection of tobacco ingredients information. HHS's overall goal is to reduce death and disability resulting from cigarette smoking and other forms of tobacco use through programs of information, education and research.

The Comprehensive Smokeless Tobacco Health Education Act of 1986 (15 U.S.C. 4401 et seq., Pub. L. 99–252) requires that each person who manufactures, packages, or imports smokeless tobacco provide the Secretary of HHS annually with a report on the quantity of nicotine contained in smokeless tobacco products. This notice implements this nicotine reporting requirement. CDC is requesting OMB clearance to collect this information for three years. A standard methodology for measurement of quantity of nicotine in smokeless tobacco has been developed. The methodology (''Protocol for Analysis of Nicotine, Total Moisture, and pH in Smokeless Tobacco Products'') is intended to provide standardized measurement of nicotine, total moisture, and pH in smokeless tobacco products.

**Background**

In 1989, the smokeless industry submitted a business review letter to the Department of Justice (DOJ), in accordance with 28 CFR 50.6. This letter requested approval of a collaborative industry effort to determine standard nicotine reporting. In January 1993, DOJ extended permission to the smokeless industry to begin the development of uniform methods for analyzing smokeless tobacco products for nicotine or moisture content. The first meeting of the work group, which represented the ten major domestic manufacturers of smokeless tobacco, was convened on July 7, 1993. After a series of meetings of the joint industry work group, a standard methodology was approved by the work group and submitted to OSH for approval. The protocol was revised by OSH based on individual comments received from peer reviewers and the Division of Environmental Health Laboratory Sciences, National Center for Environmental Health, CDC. The total cost to respondents is $467,500.*

| Respondents | No. of respondents | No. of responses/respondent | Average burden/response (in hrs.) | Total burden (in hrs.) |
|---|---|---|---|---|
| Tobacco manufacturers | 11 | 1 | 1,706 | 18,766 |

*Please note that these figures are based on the average reporting time and cost estimations for six major smokeless tobacco manufacturers are reported by Patton Boggs, LLP.

*Please note that these figures are based on the average reporting time and cost estimations for six major smokeless tobacco manufacturers as reported by Patton Boggs, LLP.

**Note:** The annual reporting of the quantity of nicotine contained in smokeless tobacco products for calendar year 1997 is due on July 31. In future years, the annual report will be due on March 31 of each year; this is the same date that lists the ingredients added to tobacco in the manufacture of smokeless tobacco products are due.

Dated: April 24, 1997.

**Wilma G. Johnson,**

*Acting Associate Director for Policy Planning and Evaluation, Centers for Disease Control and Prevention (CDC).*

[FR Doc. 97–11348 Filed 5–1–97; 8:45 am]

BILLING CODE 4163–18–P

## DEPARTMENT OF HEALTH AND HUMAN SERVICES

### Centers for Disease Control and Prevention

### Protocol to Measure the Quantity of Nicotine Contained in Smokeless Tobacco Products Manufactured, Imported, or Packaged in the United States

**AGENCY:** Centers for Disease Control and Prevention (CDC), Department of Health and Human Services.

**ACTION:** Request for comments.

**SUMMARY:** CDC's Office on Smoking and Health (OSH) is requesting comments from all interested parties on a standard methodology for measurement of quantity of nicotine in smokeless tobacco. The Comprehensive Smokeless Tobacco Health Education Act of 1986 (15 U.S.C. 4401 *et seq.*, Pub. L. 99–252) requires that each person who manufactures, packages, or imports smokeless tobacco provide the Secretary of HHS annually with a report on the quantity of nicotine contained in smokeless tobacco products; OSH has been delegated the authority to implement the nicotine reporting provisions of this law. The methodology (''Protocol for Analysis of Nicotine, Total Moisture, and pH in Smokeless Tobacco Products'') is the basis for such nicotine reporting and is intended to provide standardized measurement of nicotine, total moisture, and pH in smokeless tobacco products.

**DATES:** Written comments to this notice should be submitted to Patricia Richter, Centers for Disease Control and Prevention (CDC), Office on Smoking and Health, 4770 Buford Highway, NE., Mailstop K50, Atlanta, Georgia 30341–3724 on or before June 2, 1997. Comments may also be faxed to Patricia Richter at (770) 488–5848 or submitted by email to pir1@cdc.gov as WordPerfect 5.0, 5.1/5.2, 6.0/6.1 or ASCII files.

**FOR FURTHER INFORMATION CONTACT:** Patricia Richter, Centers for Disease Control and Prevention (CDC), Office on Smoking and Health, 4770 Buford Highway NE., Mailstop K50, Atlanta, Georgia 30341–3724; telephone: (770) 488–5703.

**SUPPLEMENTARY INFORMATION:** In 1989, the smokeless tobacco industry submitted a business review letter to the Department of Justice (DOJ), in accordance with 28 CFR 50.6. This letter requested approval of a collaborative industry effort to determine standard nicotine reporting. Previous to this, each company employed different methods of nicotine and moisture analysis; however, HHS requested that a standard methodology be developed to ensure the accuracy and reliability of the information on nicotine and moisture, as well as to ensure comparability of the data. HHS did not have the resources to develop such a standardized methodology thus necessitating a collaborative industry process to develop the methodology.

In January 1993, DOJ extended permission to the smokeless industry to begin the development of uniform methods for analyzing smokeless tobacco products for nicotine and moisture content. The smokeless tobacco industry formed a work group, which represented the ten major domestic manufacturers of smokeless tobacco. The first meeting of the work group was on July 7, 1993 and the group continued to meet throughout 1993 and 1994. After this series of meetings, a standard methodology was approved by the work group and submitted to OSH. The protocol was revised by OSH based on individual comments received from peer reviewers and the Division of Environmental Health Laboratory Sciences, National Center for Environmental Health, CDC. Once OSH has received comments, it will review the comments, make the necessary changes to the methodology, and publish the final methodology in the **Federal Register**. Once the final methodology has been published, OSH will implement the nicotine reporting requirements of the Act.

Dated: April 24, 1997.

**Joseph R. Carter,**

*Acting Associate Director for Management and Operations, Centers for Disease Control and Prevention (CDC).*

*Standardized methodology: Protocol for Analysis of Nicotine, Total Moisture, and pH in Smokeless Tobacco Products*

**I. Requirements** [1, 2]

A. Reagents [3]

1. 2 N Sodium hydroxide (NaOH)
2. Methyl t-butyl ether (MTBE)
3. (-)-Nicotine (Fluka 72290) >99% purity [4]
4. Quinoline (Aldrich)
5. Standard pH buffers; 7.00 and 10.00
6. Deionized distilled water

B. Glassware and supplies

1. Volumetric flasks
2. 25 mm x 200 mm Pyrex culture tubes with Teflon lined screw caps (Mfr #982625X)
3. Pasteur pipettes
4. Repipettors (10 mL and 50 mL)
5. Linear shaker (configured to hold tubes in horizontal position) [5, 6]
6. Moisture dish—Al, diam. 45–65 mm, depth 20–45 mm, with tight fitting cover
7. Teflon-coated magnetic stirring bar
8. 50 mL polypropylene container

C. Instrumentation

1. Robot Coupe Model RSI 6V Scientific Batch Processor or equivalent
2. Capillary gas chromatograph with modified split capability (splitless/split), flame ionization detector, integrator, a 4 mm split/splitless glass liner and a 30 m × 0.32 mm ID fused silica column crosslinked and coated with 5% phenyl and 95% methyl silicone at 1 m film thickness.
3. Orion Model SA 720 pH meter equipped with Orion 8103 Ross Combination pH electrode.

D. Additional Equipment

Forced-draft oven, regulated to 99.5 ± 0.5 °C. Suggested dimensions: 19×19×19″ (48 cm). Approx. oven settings: fresh air intake vent ⅕ open; air control damper ¼ open; air exhaust vent ⅓ open.

E. Chromatographic Conditions [7, 8]

1. Detector temperature: 250 °C
2. Injector temperature: 250 °C
3. Flow rate at 100 °C—1.7 mL/min; with split ratio of 40:1 [9]
4. Injection volume: 2 µl
5. Column conditions: 110–185 °C at 10 °C min-1; 185–240 °C at 6 °C min $^{-1}$, hold at final temperature for 10 min. Equil. time: 5 min.

F. Sample Preparation [10]

There exist six different categories of commercial smokeless tobacco products:

1. Dry snuff;
2. Wet snuff;
3. Wet snuff portion packs;
4. Plug;
5. Twist; and
6. Loose leaf.

Because of their physical characteristics, samples of three of the six product categories must be ground before nicotine, total moisture, and pH analyses can be conducted. The objective of grinding the samples is to obtain a homogeneous sample with particles measuring approximately 4 mm. Grinding to achieve this particle size should take no more than 3 minutes. To ensure proper grinding and an adequate amount of the ground sample for analysis, the minimum sample size of all commercial products to be ground should not be less than 100 grams.

To ensure precision of analyses for nicotine, total moisture, and pH, the samples

that require grinding should be ground using a Robot Coupe Model RSI 6V Scientific Batch Processor or its equivalent. This is a variable speed (0 to 3000 RPM) processor. The variable speed motor is required to ensure proper grinding of the tobacco tissues (and in the case of pH determination, the wet snuff portion pack). Elevated temperatures can result in moisture loss and an underestimated value for moisture content. Hence, care must be taken during grinding to avoid elevated temperatures. The bowl should be cleaned after each grinding to obtain accurate results.

1. *Dry snuff.* Dry snuff samples do not need to be ground since the product is a powder. The sample must be thoroughly mixed before weighing for nicotine, total moisture, and pH analysis.

2. *Wet snuff.* Wet snuff samples do not need to be ground. The sample must be thoroughly mixed before weighing for nicotine, total moisture, and pH analysis.

3. *Wet snuff portion packs.* The tobacco contents of the wet snuff portion packs do not need to be ground for nicotine, total moisture, or pH analysis. The tobacco packaging material (the ''pouch'') should be separated from the tobacco and ground to obtain particles measuring approximately 4 mm for pH analysis. The tobacco of the wet snuff portion pack and the ground pouch are combined and thoroughly mixed before pH analysis.

4. *Plug tobacco.* Break or cut apart plugs and add in portions to grinder at 2000 RPM. Reduce RPM or stop grinding if sample bowl becomes warm. Pulse the Robot Coupe, when needed, to complete grinding. Grind samples until approximately 4 mm in size. The total grinding time should be no more than 3 minutes.

5. *Twist tobacco.* Separate twists, add to grinder and grind at 2000 RPM. Reduce RPM or stop grinding if sample bowl becomes warm. Continue grinding until sample particles are approximately 4 mm in size. The total time for grinding should be no more than 3 minutes.

6. *Loose leaf.* Grind in the same manner as described in 4 and 5 to obtain product with particle size of approximately 4 mm.

**II. Nicotine Analysis**

A. Calibration Standards

1. Internal Standard (IS)

Weigh 10.00 grams of quinoline, transfer to a 250 mL volumetric flask and dilute to volume with MTBE. This solution will be used for calibration of the instrument for the nicotine calibration curve (II.A.2), for the standards addition assay (II.B), and for preparation of the extracting solution (II.D).

2. Nicotine Calibration Curve

a. Weigh 1.0000 gram of nicotine into a clean, dry 100 mL volumetric flask and dilute to volume with MTBE. This gives a nicotine concentration of 10 mg/mL for the stock solution.

b. Accurately pipette 0.5 mL of IS from stock solution (II.A.1) to five clean, dry 50 mL volumetric flasks. To prepare a nicotine standard corresponding to a concentration of 0.8 mg/mL, pipette exactly 4.0 mL of the nicotine standard (II.A.2.a) to a 50 mL volumetric flask containing the internal standard and dilute to volume with MTBE. To obtain nicotine concentrations equivalent to 0.6, 0.4, 0.2, and 0.1 mg/mL, pipette precisely 3.0, 2.0, 1.0, and 0.5 mL, respectively, of the nicotine standard into the four remaining flasks and dilute to volume with MTBE.

c. Transfer aliquots of the five standards to auto sampler vials and determine the detector response for each standard using gas chromatographic conditions described in I.E.

d. Calculate least squares line for linear equation from these standards by obtaining the ratio of $Area_{nicotine}/Area_{IS}$. This ratio will be the Y value and the concentration of nicotine will be the X value for determining the linear equation of the line (Equation 1):

Equation 1:

$Y=a+bX;$

Where:

X=Concentration of nicotine in mg

$Y=Area_{nicotine}/Area_{IS}$

a=intercept on the ordinate (y axis)

b=slope of the curve

The final result will be reported in the following units:

Concentration of nicotine=mg of nicotine/gram of tobacco sample.

e. Determine the recovery of nicotine by pipetting 10 mL of the 0.4 mg/mL nicotine standard to a screw capped tube containing 1.0 mL of 2 N NaOH. Cap the tube. Shake the contents vigorously and allow the phases to separate. Transfer an aliquot of the organic phase to an injection vial and inject. Calculate the concentration of nicotine using the equation of the line in II.A.2.d above. This should be repeated two more times to obtain an average of the three values. The recovery of nicotine can be obtained by using the following equation:

Equation 2:

$Recovery=Nicotine_{calculated}/Nicotine_{actual}$

B. Standards Addition Assay

Prior to analyzing a smokeless tobacco product for nicotine content, the testing facility must validate the system to verify that matrix bias is not occurring during nicotine extraction. This is done by analyzing the nicotine calibration standards in the same vegetable matrix as the smokeless tobacco. The standards addition assay should be performed with each smokeless tobacco product tested.

1. Using an analytical balance, accurately weigh 1.000 ± 0.020 gram of the homogeneous, prepared tobacco sample into a culture tube. Repeat this five times for a total of 6 culture tubes containing the smokeless tobacco product. Record the weight of each sample.

2. To prepare a nicotine standard corresponding to a concentration of 0.8 mg/mL, pipette exactly 4.4 mL of the nicotine standard (II.A.2.a) to one of the culture tubes. To obtain nicotine concentrations equivalent to 0.6, 0.4, 0.2, and 0.1 mg/mL, pipette precisely 3.3, 2.2, 1.1, and 0.55 mL, respectively, of the nicotine standard into four of the remaining culture tubes. One of the culture tubes is not supplemented with nicotine and serves as an analytical blank. Allow the samples to equilibrate for 10 minutes.

3. Pipette 5 mL of 2 N NaOH into each tube. Cap each tube. Swirl to wet sample and allow to stand 15 minutes.[11]

4. Pipette 50 mL of extraction solution (II.D.1) into each tube. Cap each tube and tighten.[12]

5. Place tubes in rack(s), place racks in linear shaker in horizontal position and shake for two hours.

6. Remove rack(s) from shaker and place in vertical position to allow the phases to separate.

7. Allow the solvent and nicotine supplemented samples and the blank to separate (maximum 2 hours).

8. Transfer aliquots of the five standards and the blank from the extraction tubes to sample vials and determine the detector response for each using gas chromatographic conditions described in I.E.

9. Subtract the $Area_{nicotine}/Area_{IS}$ of the blank from the $Area_{nicotine}/Area_{IS}$ of each of the standards.

10. Calculate least squares line for linear equation from the corrected standards as described above (Equation 1) in II.A.2.d.

The final corrected result will be reported in the following units:

Concentration of nicotine = mg of nicotine/gram of tobacco sample.

11. Determine the recovery of nicotine by pipetting 10 mL of the 0.4 mg/mL nicotine standard to a screw capped tube containing 1.0 mL of 2 N NaOH and 10 mL of extraction solution (II.D.1). Cap the tube and tighten. Shake the contents vigorously and allow the phases to separate. Transfer an aliquot of the organic phase to an injection vial and inject. Calculate the concentration of nicotine using the equation of the line above in II.A.2.d. This should be repeated two more times to obtain an average of the three values. The recovery of nicotine can be obtained by using Equation 2:

$Recovery = Nicotine_{calculated}/Nicotine_{actual}$

12. Compare the results of steps II.A.2. and II.B. If they differ by a factor of 10% or more, the recovery of nicotine from the aqueous matrix is not equivalent to recovery from the vegetable matrix of the smokeless tobacco product. In this instance, the nicotine concentration of the smokeless tobacco product must be determined from a nicotine calibration curve prepared from nicotine standards in a vegetable-based matrix.

C. Quality Control Pool

At least two quality control pools prepared in the smokeless tobacco product matrix are recommended to be included in each analytical run. The smokeless tobacco product should be enriched with nicotine at the high and low ends of expected values for the smokeless tobacco product. The pools must be analyzed in duplicate in every run. The quality control pool must be prepared in sufficient quantity to last for all analyses of a product lot.

D. Sample Extraction Procedure

1. Extraction solution is prepared by pipetting 10 mL of the IS from the stock solution (II.A.1) to a 1000 mL volumetric flask and diluting to volume with MTBE.

2. Using an analytical balance, accurately weigh 1.000 ± 0.020 gram of prepared

tobacco sample into culture tube and record weight.[13] The number of products sampled per lot should reflect an acceptable level of precision.[14] The test material is to be representative of the product that is sold to the public and therefore should consist of sealed, packaged samples from each lot of finished product that is ready for commercial distribution.

Triplicate determinations will provide precision data.

3. Pipette 5 mL of 2 N NaOH into the tube. Cap the tube. Swirl to wet sample and allow to stand 15 minutes.[11]

4. Pipette 50 mL of extraction solution into tube, cap tube and tighten.[12]

5. Place tubes in rack(s), place racks in linear shaker in horizontal position and shake for two hours.

6. Remove rack(s) from shaker and place in vertical position to allow the phases to separate.

7. Allow the solvent and sample to separate (maximum 2 hours). Transfer an aliquot from the extraction tube to a sample vial and cap.

8. Analyze the extract using GC conditions as described above (I.E) and calculate the concentration of nicotine using the linear calibration equation. Correct percent nicotine values for both recovery and weight of sample by using Equation 3.[15]

Equation 3:[16]

$$\text{Nicotine (mg/g)} = \frac{\left(\text{Area}_{\text{nicotine}}/\text{Area}_{\text{IS}}\right) - \text{a}}{\text{b} \times \text{Sample Wt} \times \text{Recovery}}$$

9. Report the *final* nicotine determination as mg of nicotine per gram of the tobacco product (mg nicotine/gram), to an accuracy level of two decimal places. All data should include the mean value with a 95% confidence interval, the range of values, the number of samples tested per lot, and the estimated precision of the mean. Information will be reported for each manufacturer and variety (including brand families and brand variations) and brand name (e.g., Skoal Bandits, Skoal Long Cut Cherry, Skoal Long Cut Wintergreen, etc.).

**III. Total Moisture Determination**

A. This procedure is referred to as ''Total Moisture Determination'' because AOAC Method 966.02 determines water and tobacco constituents that are volatile at temperatures of 99.5±0.5°C.

B. Accurately weigh 5.00 grams of the sample (ground to pass ≤ 4 mm screen)[17] into a weighed moisture dish and place uncovered dish in oven.[18] The number of products sampled per lot should reflect an acceptable level of precision.[14] The test material is to be representative of the product that is sold to the public and therefore should consist of sealed, packaged samples from each lot of finished product that is ready for commercial distribution. Triplicate determinations will provide precision data.

C. Do not exceed 1 sample/10 sq in. (650 sq cm) shelf space, and use only 1 shelf. Dry 3 hr at 99.5 ± 0.5 °C. Remove from oven, cover, and cool in desiccator to room temp. (about 30 min). Reweigh and calculate percent moisture.

D. Report the *final* moisture determination as a percentage (%), to an accuracy level of one decimal place. All data should include the mean value with a 95% confidence interval, the range of values, the number of samples tested per lot, and the estimated precision of the mean. In addition, information for each manufacturer and variety (including brand families and brand variations) and brand name (e.g., Skoal Bandits, Skoal Long Cut Cherry, Skoal Long Cut Wintergreen, etc.) will be reported.

**IV. pH Measurement**

A. Test samples as soon as possible after they are received. The number of products sampled per lot should reflect an acceptable level of precision.[14] The test material is to be representative of the product that is sold to the public and therefore should consist of sealed, packaged samples from each lot of finished product that is ready for commercial distribution. Triplicate determinations will provide precision data.

B. Accurately weigh 2.00 grams of the sample. Place in a 50 mL polypropylene container with 10 mL deionized distilled water.

C. Place teflon-coated magnetic stirring bar in container and stir mixture continuously throughout testing.

D. Measure pH of sample after two-point calibration with standard pH 7.00 and 10.00 buffers on a pH meter calibrated to an accuracy of two decimal places.

E. Calculate the mean of pH values at 5, 15, 30, and 60 minutes.

F. Report the *final* pH determination to an accuracy level of two decimal places. All data should include the mean value with a 95% confidence interval, the range of values, the number of samples tested per lot, and the estimated precision of the mean. Information will be reported for each manufacturer and variety (including brand families and brand variations) and brand name (e.g., Skoal Bandits, Skoal Long Cut Cherry, Skoal Long Cut Wintergreen, etc.).

G. Estimate the ''free base nicotine'' content with the Henderson-Hasselbalch equation (Equation 4), based on measured pH and nicotine content.

Equation 4:

$$\text{pH} = \text{pKa} + \log\frac{[\text{B}]}{[\text{BH}^+]}$$

$$\text{B} + \text{H}^+ \leftrightarrow \text{BH}^+$$

$$\text{\% free base nicotine} = \frac{\dfrac{[\text{B}]}{[\text{BH}^+]}}{\dfrac{[\text{B}]}{[\text{BH}^+]} + 1} \times 100$$

pKa = 8.02 (CRC Handbook of Chemistry and Physics, 1989–1990)

[B] = amount of free base nicotine

[$BH^+$] = amount of ionized nicotine

H. Report the *final* estimated free base nicotine as a percentage (%) of the total nicotine content, to an accuracy level of two decimal places and as mg of free base nicotine per gram of the tobacco product (mg free base nicotine/gram), to an accuracy level of two decimal places. All data should include the mean value with a 95% confidence interval, the range of values, the number of samples tested per lot, and the estimated precision of the mean. Information will be reported for each manufacturer and variety (including brand families and brand variations) and brand name (e.g., Skoal Bandits, Skoal Long Cut Cherry, Skoal Long Cut Wintergreen, etc.).

Sample calculation:

Mean total nicotine = 10.30 (mg/g)
Mean pH = 7.50
pKa = 8.02

$$\text{pH} = \text{pKa} + \log\frac{[\text{B}]}{[\text{BH}^+]}$$

$$7.50 = 8.02 + \log\frac{[\text{free base nicotine}]}{[\text{ionized nicotine}]}$$

$$-0.52 = \log\frac{[\text{free base nicotine}]}{[\text{ionized nicotine}]}$$

$$0.302 = \frac{[\text{free base nicotine}]}{[\text{ionized nicotine}]}$$

$$\text{\% free base nicotine} = \frac{\dfrac{[\text{B}]}{[\text{BH}^+]}}{\dfrac{[\text{B}]}{[\text{BH}^+]} + 1} \times 100$$

$$\text{\% free base nicotine} = \frac{0.302}{0.302 + 1} \times 100$$

% free base nicotine = 23.20

$$\text{Total free nicotine (mg/g)} = \text{total nicotine} \times \frac{\text{\% free base nicotine}}{100}$$

$$\text{Total free nicotine (mg/g)} = 10.30 \times \frac{23.20}{100}$$

Total free nicotine (mg/g) = 2.39

**V. Assay Criteria for Quality Assurance**

A. Establishing limits for Quality Control Parameters

All quality control parameters must be determined within the laboratory in which they are to be used. At least 10 within-laboratory runs must be performed to establish temporary confidence intervals for the quality control parameters. Permanent limits should be established after 20 runs and should be reestablished after each additional 20 runs.

B. Exclusion of Outliers from the Calibration Curve[16]

The coefficient of determination between $\text{Area}_{\text{nicotine}}/\text{Area}_{\text{IS}}$ and nicotine concentration should be equal to 0.99 or higher. Any calibration standard having an estimated

concentration computed from the regression equation (Equation 1) which is different from its actual concentration by a factor of 10% can be excluded from the calibration curve. Up to two concentrations may be excluded, but caution should be used in eliminating values, since bias may be increased in the calibration curve. If an outlier value is eliminated, its duplicate value must also be discarded to avoid producing a new bias. All unknowns must fall within the calibration curve; therefore, duplicate values excluded at either end of the calibration curve will restrict the useful range of the assay.

C. Quality Control Pools and Run Rejection Rules

The mean estimated nicotine concentration in a pool should be compared with the established limits for that pool based on at least 20 consecutive runs. An analytical run should be accepted or rejected based upon the following set of rules adapted from Westgard et al. (1981).

1. When the mean of one QC pool exceeds the limit of $\bar{x} \pm 3$ standard deviations (SD), then the run is rejected as out of control. Here, $\bar{x}$ and SD represent the overall mean and standard deviation of all estimated nicotine concentrations for a particular pool in the runs which were used to establish the control limits.

2. When the mean nicotine concentrations in two QC pools in the same run exceed the same direction, then the run must be rejected. The same direction is the condition in which both pools exceed either the $\bar{x}$ + 2 SD or the $\bar{x}$–2 SD limits.

3. When the mean nicotine concentrations in one or two QC pools exceed their $\bar{x}$ + 2 SD limits in the same direction in two consecutive runs, then both runs must be rejected.

4. When the mean nicotine concentrations in two QC pools are different by more than a total of 4 SD, then the run must be rejected. This condition may occur, for example, when one QC pool is 2 SD greater than the mean, and another is 2 SD less than the mean.

**Endnotes**

The comments and notes listed below can be described as Good Laboratory Practice guidelines; they are described in detail in this protocol to ensure minimal interlaboratory variability in the determination of nicotine, total moisture, and pH in smokeless tobacco.

[1] This protocol assumes that the testing facility will implement and maintain a stringent Quality Assurance/Quality Control program to include, but not be limited to, regular interlaboratory comparisons, routine testing of random blank samples, determination of the quality and purity of purchased products, and proper storage and handling of all reagents and samples.

[2] When a specific product or instrument is listed, it is the product or instrument that was used in the development of this method. Equivalent products or instruments may also be used. The use of company or product name(s) is for identification only and does not imply endorsement by the Centers for Disease Control and Prevention.

[3] All chemicals, solvents, and gases are to be of the highest purity.

[4] Companies must ensure that the purity of the nicotine base is certified by the vendor and that the chemical is properly stored. However, nicotine base oxidizes with storage, as reflected by the liquid turning brown. If oxidation has occurred, the nicotine base should be distilled prior to use in making a standard solution.

[5] Horizontal shaking will allow more intimate contact of this three phase extraction. There is a minimal dead volume in the tube due to the large sample size and extraction volume. This necessitates horizontal shaking.

[6] If linear shaker is not available, a wrist action shaker using 250 mL stoppered Erlenmeyer flasks can be substituted. Values for nicotine are equivalent to those obtained from the linear shaker.

[7] After installing a new column, condition the column by injecting a tobacco sample extract on the column, using the described column conditions. Injections should be repeated until areas of IS and nicotine are reproducible. This will require approximately four injections. Recondition column when instrument has been used infrequently and after replacing glass liner.

[8] Glass liner and septum should be replaced after every 100 injections.

[9] Most older instruments operate at constant pressure. To reduce confusion, it is suggested that the carrier gas flow through the column be measured at the initial column temperature.

[10] The testing facility must ensure that samples are obtained through the use of a survey design protocol for sampling ''at one point in time'' at the factory or warehouse. The survey design protocol must address short-, medium-and long-term product variability (e.g., variability over time and from contai ner to container of the tobacco product) as defined by ISO Protocol 8243, Annex C. Information accompanying results for each sample should include, but not be limited to:

1. For each product—manufacturer and variety (including brand families and brand variations) and brand name (e.g., Skoal Bandits, Skoal Long Cut Cherry, Skoal Long Cut Wintergreen, etc.) information.

2. Product ''category,'' e.g., loose leaf, plug, twist, dry snuff, moist snuff, etc.

3. Lot number.

4. Lot size.

5. Number of randomly sampled, sealed, packaged (so as to be representative of the product that is sold to the public) smokeless tobacco products selected per lot (sampling fraction) for nicotine, moisture, and pH determination.

6. Documentation of method used for random sample selection.

7. ''Age'' of product when received by testing facility and storage conditions prior to analysis.

[11] Use non-glass 10 mL repipette for transferring NaOH solution.

[12] Use 50 mL repipette for transferring MTBE.

[13] For dry snuff, use 0.500 ± 0.010 gram sample.

[14] The testing facility is referred to ISO Procedure 8243 for a discussion of sample size and the effect of variability on the precision of the mean of the sample (ISO 8243, 1991).

[15] When analyzing new smokeless tobacco products, extract product without IS to determine if any components co-elute with the IS or impurities in the IS. This interference could artificially lower calculated values for nicotine.

[16] The calculated nicotine values for *all* samples must fall within the low and high nicotine values used for the calibration curve. If not, prepare a fresh nicotine standard solution and an appropriate series of standard nicotine dilutions. Determine the detector response for each standard using chromatographic conditions described in I.E.

[17] The method is a modification of AOAC Method 966.02 (1990) in that the ground tobacco passes through a 4 mm screen rather than a 1 mm screen.

[18] When drying samples, do not dry different products (e.g., wet snuff, dry snuff, loose leaf) in the oven at the same time since this will produce errors in the moisture determinations.

**References**

AOAC (Association of Official Analytical Chemists). Official Methods of Analysis. 966.02: Moisture in Tobacco. (1990) Fifth Edition. K. Helrich (ed). Association of Official Analytical Chemists, Inc. Suite 400, 2200 Wilson Boulevard, Arlington, Virginia 22201 USA.

CRC handbook of chemistry and physics. RC Weast, DR Lide, MJ Astle, and WH Beyer (eds). 70th ed. Boca Raton, Florida: CRC Press (1989–1990) D–162.

Henningfield, J.E., Radzius A., Cone E.J. (1995). Estimation of available nicotine content of six smokeless tobacco products. Tobacco Control 4:57–61.

ISO (International Organization for Standardization). IOS 8243: Cigarettes—Sampling. (1991). Second Edition. Prepared by Technical Committee ISO/TC 126, Tobacco and tobacco products. International Organization for Standardization, Case Postale 56, CH–1211 Genève 20, Switzerland.

Westgard JO, Barry P, Hunt M, and Groth T. (1981). A multi-rule Shewhart chart for quality control in clinical chemistry. Clinical Chemistry 27:493.

[FR Doc. 97–11344 Filed 5–1–97; 8:45 am]

BILLING CODE 4163–18–P

## DEPARTMENT OF HEALTH AND HUMAN SERVICES

### Food and Drug Administration

### Advisory Committee; Notice of Meeting

**AGENCY:** Food and Drug Administration, HHS.

**ACTION:** Notice.

This notice announces a forthcoming meeting of a public advisory committee of the Food and Drug Administration (FDA). The meeting will be open to the public.

*Name of Committee*: Drug Abuse Advisory Committee.

*General Function of the Committee*: To provide advice and recommendations to the agency on FDA regulatory issues.

*Date and Time*: The meeting will be held on June 9 and 10, 1997, 8:30 a.m. to 5:30 p.m.

*Location*: Holiday Inn—Bethesda, 8120 Wisconsin Ave., Bethesda, MD.

*Contact Person*: Karen M. Templeton-Somers or John Schupp, Center for Drug Evaluation and Research (HFD–21), Food and Drug Administration, 5600 Fishers Lane, Rockville, MD 20857, 301–443–5455, or FDA Advisory Committee Information Line, 1–800–741–8138 (301–443–0572 in the Washington, DC area), code 12535. Please call the Information Line for up-to-date information on this meeting.

*Agenda*: On June 9, 1997, the committee will discuss ways in which the labeling for smoking cessation products could be made more clinically useful. Public response to this topic is solicited. Please submit your response to Docket No. 97N–0149, entitled ''Reevaluation of Labeling of Smoking Cessation Products,'' to the Dockets Management Branch (HFA–305), Food and Drug Administration, 5600 Fishers Lane, Rockville, MD 20857. In order for comments to be summarized and sent to the Drug Abuse Advisory Committee prior to the June 9, 1997, meeting, they must be received by Dockets Management Branch by May 13, 1997. The docket will remain open for additional comments until July 11, 1997. On June 10, 1997, the committee will discuss topics in clinical trial design for medications used to treat cocaine abuse.

*Procedure*: Interested persons may present data, information, or views, orally or in writing, on issues pending before the committee. Written submissions may be made to the contact person by May 27, 1997. Oral presentations from the public will be scheduled between approximately 8:30 a.m. to 9:30 a.m. Time allotted for each presentation may be limited. Those desiring to make formal oral presentations should notify the contact person before May 27, 1997, and submit a brief statement of the general nature of the evidence or arguments they wish to present, the names and addresses of proposed participants, and an indication of the approximate time requested to make their presentation.

Notice of this meeting is given under the Federal Advisory Committee Act (5 U.S.C. app. 2).

Dated: April 24, 1997.

**Michael A. Friedman,**

*Deputy Commissioner for Operations.*

[FR Doc. 97–11442 Filed 5–1–97; 8:45 am]

BILLING CODE 4160–01–F

---

## DEPARTMENT OF HEALTH AND HUMAN SERVICES

### Health Care Financing Administration

### Statement of Organization, Functions, and Delegations of Authority

Part F of the Statement of Organization, Functions, and Delegations of Authority for the Department of Health and Human Services, Health Care Financing Administration (HCFA), (**Federal Register**, Vol. 59, No. 60, pp. 14628–14662, dated Tuesday, March 29, 1994, and subsequent thereafter) is amended to reflect changes to the structure of HCFA.

HCFA has reorganized the way it operates for the following reasons: Growth of managed care, changes in the Federal/State relationship, and movement to a Medicare Transaction System environment. The Centers/Offices are functionally grouped to support beneficiaries and be more responsive to major changes in the health care market.

**The specific amendments to Part F are described below:**

• *Section F.10.A.5. (Organization) is amended to read as follows:*

1. Press Office (FAE)
2. Office of Legislation (FAF)
3. Office of Internal Customer Support (FAH)
4. Office of Equal Opportunity and Civil Rights (FAJ)
5. Office of Strategic Planning (FAK)
6. Office of Communications and Operations Support (FAL)
7. Office of Clinical Standards and Quality (FAM)
8. Office of Financial Management (FAN)
9. Office of Information Services (FAP)
10. Center for Beneficiary Services (FAQ)
11. Center for Health Plans and Providers (FAR)
12. Center for Medicaid and State Operations (FAS)
13. Consortium #1 (FAU)
14. Consortium #2 (FAV)
15. Consortium #3 (FAW)
16. Consortium #4 (FAX)

• *Section F.20.A.5. (Functions) is amended to read as follows:*

1. Press Office (FAE)

• Serves as the focal point for the Agency to the news media.

• Serves as senior counsel to the Administrator in all activities related to the media. Provides consultation, advice, and training to the Agency's senior staff with respect to relations with the news media.

• Develops and executes strategies to further the Agency's relationship and dealings with the media. Maintains a broad based knowledge of the Agency's structure, responsibilities, mission, goals, programs, and initiatives in order to provide or arrange for rapid and accurate response to news media needs.

• Prepares and edits appropriate materials about the Agency, its policies, actions and findings, and provides them to the public through the print and broadcast media. Develops and directs media relations' strategies for the Agency.

• Responds to inquiries from a broad variety of news media, including major newspapers, national television and radio networks, national news magazines, local newspapers and radio and television stations, publications directed toward the Agency's beneficiary populations, and newsletters serving the health care industry.

• Manages press inquiries, coordinates sensitive press issues, and develops policies and procedures for how press and media inquiries are handled.

• Arranges formal interviews for journalists with the Agency's Administrator or other appropriate senior Agency staff; identifies for interviewees the issues to be addressed, and prepares or obtains background materials as needed.

• For significant Agency initiatives, issues media advisories and arranges press conferences as appropriate; coordinates material and personnel as necessary.

• Serves as liaison with the Department of Health and Human Services and White House press offices.

2. Office of Legislation (FAF)

• Provides leadership and executive direction within the Agency for legislative planning to address the Administration's agenda.

• Tracks, evaluates and develops provisions of annual legislative proposals for Medicare, Medicaid, Clinical Laboratory Improvement Act (CLIA), Health Insurance Portability and Accountability Act (HIPAA) and related statutes affecting health care financing

quality and access in concert with HCFA components, the Department and the Office of Management and Budget (OMB).

• Advances the legislative policy process through analysis, review and development of health care initiatives and issues.

• Develops the long-range legislative plans for the Agency in collaboration with the HCFA Centers and Offices.

• Participates with other HCFA components in the development of Agency policy, including implementing regulations and administrative actions.

• Manages pro-actively the Agency's response in times of heightened congressional oversight of HCFA in collaboration with the Centers and Offices. Manages, coordinates and develops policies for responding to congressional inquiries.

• Coordinates activities with the Office of the Assistant Secretary for Legislation (ASL) and serves as the ASL's principal contact point on legislative and congressional relations.

• In collaboration with HCFA Centers and Offices, provides technical assistance, consultation and information services to congressional committees and individual members of Congress on the Medicare and Medicaid programs, new HCFA initiatives and pertinent legislation.

• In collaboration with the HCFA Centers and Offices, provides technical, analytical, advisory and information services to the Agency's components, the Department, the White House, OMB, other government agencies, private organizations and the general public on Agency legislation.

• Tracks and reports on legislation relating to HCFA programs and maintains legislative reference library.

• Coordinates the Agency's participation in congressional hearings, including preparation of testimony and briefing materials, and covers all other congressional hearings on matters of interest to the Agency except Appropriations Committee hearings specifically on the appropriation budget.

3. Office of Internal Customer Support (FAH)

• Serves as the focal point for providing the Agency's internal customers (employees) with support in human resource management, procurement management, logistics, and local area network (LAN) services. Includes planning, organizing, coordinating, and evaluating needed activities in each area.

• Manages and directs the Agency's human resources programs including: Human resources planning and development, position classification, organizational analysis and development, administrative and program delegations of authority, management support, labor relations, employee assistance, employee benefits, and performance management and awards.

• Leads the assessment of staff development and support requirements. Designs, develops and maintains staff development programs to meet theses needs. Activities focus on: Development of baseline information and an ongoing performance monitoring program of staff satisfaction and functional competencies; development of communications and feedback mechanisms within the Agency; and close collaboration with other Federal and private sector groups with shared interest in human resource management and development.

• Develops and implements the Agency's policies, rules and procedures related to effecting, managing and directing Agency procurements. Ensures that procurement meet all legal, ethical and financial requirements. Working with the project officer (technical representative) in the components, evaluates the performance of contractor/grantee, and ensures that required deliverables are produced within prescribed guidelines.

• Provides workstation, server, and local area network support for HCFA-wide activities. Works with customer components to develop requirements, needs and cost benefit analysis in support of the LAN infrastructure including hardware, software and office automation services.

• Provides policy direction, coordination and support for administrative services including space, property, records, printing and facilities' management, safety and security, and teleproduction, telecommunications and graphics services, and a centralized customer service desk.

• Serves as the organizational home of the Provider Reimbursement Review Board (PRRB). Furnishes administrative support to the PRRB and the Medicare Geographic Classification Review Board (MGCRB). On behalf of the Secretary or the Administrator conducts hearings that are not within the jurisdiction of the Departmental Appeals Board, the Social Security Administration's Office of Hearings and Appeals, PRRB, MGCRB, Medicare contractors, or the States.

• Provides administrative support functions for Executive Management Services.

• Develops and maintains administrative systems for personnel, property management, and related purposes.

4. Office of Equal Opportunity and Civil Rights (FAJ)

• Provides agency-wide leadership and advice on issues of diversity, civil right, and promotion of a supportive work environment for Agency employees.

• Develops, implements and manages affirmative employment programs. Provides principal advisory, advocacy, and liaison services for the Administrator to Agency leadership and employees concerning equality in employment related issues to ensure a diverse workforce.

• Develops Equal Employment Opportunity (EEO) and civil rights compliance policy for the Agency. Assesses the Agency's compliance with applicable civil rights statutes, executive orders, regulations, policies, and programs.

• Identifies policy and operational issues and proposes solutions for resolving these issues in partnership with management, Office of the General Counsel, and other organizational entities.

• Receives and evaluates complaints for procedural sufficiency; investigates, adjudicates and resolves such complaints.

• Promotes the representation of minority groups, women, and individuals with disabilities through community outreach and other activities.

• Resolves informal discrimination complaints by means of EEO counseling and/or Alternative Dispute Resolution (ADR).

• Develops and analyzes data for internal and external reports reflecting the diversity of the Agency workforce and fairness in employment related actions. Makes recommendations to management on changes needed to ensure equal employment opportunity in every respect.

• Serves as the internal advocate for civil rights and related principles. Provides training, seminars, and technical guidance to Agency staff.

5. Office of Strategic Planning (FAK)

• Develops and manages the long-term strategic planning process for the Agency; responsible for the Agency's conformance with the requirements of the Government Performance and Results Act (GPRA).

• Provides analytic support and information to the Administrator and

the Executive Council needed to establish Agency goals and directions.

- Performs environmental scanning, identifying, evaluating, and reporting emerging trends in health care delivery and financing and their interactions with Agency programs.
- Manages strategic, crosscutting initiatives.
- Designs and conducts research and evaluations of health care programs, studying their impacts on beneficiaries, providers, plans, States and other partners and customers, designing and assessing potential improvements, and developing new measurement tools.
- Coordinates all Agency demonstration activities, including development of the research and demonstration annual plan, evaluation of all Agency demonstrations, and assistance to other components in the design of demonstrations and studies.
- Manages assigned demonstrations, including Federal review, approval, and oversight; coordinates and participates with departmental components in experimental health care delivery projects.
- Conducts the Agency's actuarial program. Evaluates the financial and actuarial status of HCFA programs for the annual Trustees Reports and Administration budget, and under proposed legislation. Develops macroeconomic analyses of health care financing issues; conducts actuarial, economic, and demographic studies and develops projections of health care costs.
- Provides actuarial and other technical advice and consultation to Agency components, governmental components, Congress, and outside organizations.
- Develops the official estimates of the Nation's health care spending.
- Develops actuarial, research, demonstration, and other publications and papers related to health care issues.
- Computes payment rates, indices, and copayments in support of program operations.

6. Office of Communications and Operations Support (FAL)

- Serves a neutral broker coordination role, including scheduling meetings and briefings for the Administrator and coordinating communications between and among central and regional office, in order to ensure that emerging issues are identified early, all concerned components are directly and fully involved in policy development/ decision making and that all points of view are presented.
- Coordinates and monitors assigned Agency initiatives which are generally tactical, short-term and cross-component in nature (e.g., legislative implementation).
- Provides operational and analytical support to the Executive Council.
- Manages speaking and meeting requests for or on behalf of the Administrator and Deputy Administrator and researches and writes speeches.
- Coordinates agency-wide communication policies to insure that messages for external audiences appropriately incorporate Agency themes.
- Coordinates the preparation of manuals and other policy instructions to insure accurate and consistent implementation of the Agency's programs.
- Manages the Agency's system for developing, clearing and tracking regulations, setting regulation priorities and corresponding work agendas; coordinates the review of regulations received for concurrence from departmental and other government agencies and develops routine and special reports on the Agency's regulatory activities.
- Manages the agency-wide clearance system to insure appropriate involvement from Agency components and serves as a primary focal point for liaison with the Executive Secretariat in the Office of the Secretary.
- Operates the agency-wide correspondence tracking and control system and provides guidance and technical assistance on standards for content of correspondence and memoranda.
- Formulates strategies to advance overall communications goals and coordinates the design and publication process in electronic and other media for HCFA electronic information, publications and reports to ensure consistency with other information.
- Provides management and administrative support to the Office of the Attorney Advisor and staff.

7. Office of Clinical Standards and Quality

- Serves as the focal point for all quality, clinical and medical science issues and policies for the Agency's programs. Provides leadership and coordination for the development and implementation of a cohesive, agency-wide approach to measuring and promoting quality and leads the Agency's priority-setting process for clinical quality improvement. Coordinates quality-related activities with outside organizations. Monitors quality of Medicare, Medicaid, and CLIA. Evaluates the success of interventions.
- Identifies and develops best practices and techniques in quality improvement; implementation of these techniques will be overseen by appropriate components. Develops and collaborates on demonstration projects to test and promote quality measurement and improvement.
- Develops, tests and evaluates, adopts and supports performance measurement systems (quality indicators @) to evaluate care provided to HCFA beneficiaries except for demonstration projects residing in other components.
- Assures that the Agency's quality-related activities (survey and certification, technical assistance, beneficiary information, payment policies and provider/plan incentives) are fully and effectively integrated. Carries out the Health Care Quality Improvement Program (HCQIP) for the Medicare, Medicaid, and CLIA programs.
- Leads in the specification and operational refinement of an integrated HCFA quality information system, which includes tools for measuring the coordination of care between health care settings; analyzes data supplied by that system to identify opportunities to improve care and assess success of improvement interventions.
- Develops requirements of participation for providers and plans in the Medicare, Medicaid, and CLIA programs. Revises requirements based on statutory change and input from other components.
- Operates the Medicare Peer Review Organization and End Stage Renal Disease (ESRD) Network program in conjunction with regional offices, providing policies and procedures, contract design, program coordination, and leadership in selected projects.
- Identifies, prioritizes and develops content for clinical and health related aspects of HCFA's Consumer Information Strategy; collaborates with other components to develop comparative provider and plan performance information for consumer choices.
- Prepares the scientific, clinical, and procedural basis for and recommends to the Administrator decisions regarding coverage of new and established technologies and services. Coordinates activities of the Agency's Technology Advisory Committee (TAC) and maintains liaison with other departmental components regarding the safety and effectiveness of technologies and services; prepares the scientific and

clinical basis for, and recommends approaches to, quality-related medical review activities of carriers and payment policies.

8. Office of Financial Management (FAN)

- Serves as the Chief Financial Officer and Comptroller for the Agency.
- Formulates, presents and executes all Agency budget accounts; develops outlay plans and tracks contract and grant award amounts; acts as liaison with the Congressional Budget Office (CBO) on budget estimates; reviews demonstration waivers (except 1115) for revenue neutrality. Is responsible for ensuring that the budget is formulated in accordance with the Agency's strategic plan and the GPRA goals and performance measures.
- Acts as liaison with ASMB, OMB, and the Congressional appropriations committees for all matters concerning the Agency's operating budget.
- Manages the Medicare financial management system, the Medicare contractors' budgets, Peer Review Organizations' budgets, research budgets, managed care payments, the issuance of State Medicaid grants, and the funding of the State survey/ certification and the CLIA programs. Is responsible for all Agency disbursements.
- Performs cash management activities and establishes and maintains systems to control the obligation of funds and ensure that the Anti-Deficiency Act is not violated.
- Performs the Agency's debt management activities (e.g., accounts receivable, user fees, penalties, disallowances).
- Reconciles all Agency financial data and prepares external reports to other agencies such as HHS, Treasury, OMB, Internal Revenue Service, General Services Administration, related to the Agency's obligations, expenditures, prompt payment activities, debt and cash management, and other administrative functions.
- Has overall responsibility for the fiscal integrity of all Agency programs. Develops and performs all benefit integrity policy and operations in coordination with other Agency components. Manages the Medicare program integrity contractors authorized by the HIPAA and managed care financial audit and enforcement functions. In coordination with the Center for State Operations, develops Medicaid program integrity policy; and monitors Medicaid program integrity activities.
- Working with other HCFA components, develops Agency policies governing both Medicare Secondary Payer (MSP) and Medicaid Third Party Liability.
- Develops and implements all civil money penalty policies in all programs.
- Acts as audit liaison with the General Accounting Office (GAO) and the HHS Office of Inspector General (OIG).
- Prepares financial statements for Federal Managers Financial Integrity Act (FMFIA) and GPRA.

9. Office of Information Services (FAP)

- Serves as the focal point for the responsibilities of the Agency's Chief Information Officer in planning, organizing, and coordinating the activities required to maintain an agency-wide Information Resources Management (IRM) program.
- Ensures the effective management of the Agency's information technology, and information systems and resources (e.g., implementation and administration of a change management process).
- Serves as the lead for developing and enforcing the Agency's information architecture, policies, standards, and practices in all areas of information technology.
- Develops and maintains enterprise-wide central databases, statistical files, and general access paths, ensuring the quality of information maintained in these data sources.
- Develops and implements the Medicare Transaction System (MTS).
- Directs Medicare claims payment systems activities, including CWF operation, as well as systems conversion activities.
- Develops ADP standards and policies for use by internal HCFA staff and contractor agents in such areas as applications development and use of the infrastructure resources.
- Manages and directs the operation of HCFA hardware infrastructure, including the Agency's Data Center, data communications networks, enterprise infrastructure, voice/data switch, audio conferencing and other data centers supporting HCFA programs.
- Leads the coordination, development, implementation and maintenance of health care information standards in the health care industry.
- Provides Medicare and Medicaid information to the public, within the parameters imposed by the Freedom of Information (FOIA) and Privacy Acts.
- Performs information collection analyses as necessary to satisfy the requirements of the Paperwork Reduction Act.
- Directs HCFA's ADP systems security program with respect to data, hardware, and software.
- Directs and advises the Administrator, senior staff, and components on the requirements, policies, and administration of the Freedom of Information Act and the Privacy Act.

10. Center for Beneficiary Services (FAQ)

- Serves as the focal point for all Agency interactions with beneficiaries, their families, care givers and other representatives concerning improving beneficiary ability to make informed decisions about their health and about program benefits administered by the Agency. These activities include strategic and implementation planning and evaluation, and communications.
- Assesses beneficiary and other consumer needs, develops and oversees interventions targeted to meet these needs, and documents and disseminates results of these interventions. These activities focus on Agency beneficiary service goals and objectives and include: Development of baseline and ongoing monitoring information concerning populations affected by Agency programs; development of performance measures and evaluation programs; design and implementation of beneficiary services initiatives; development of communications channels and feedback mechanisms within the Agency and between the Agency and its beneficiaries and their representatives; and close collaboration with other Federal and State agencies and other stakeholders with a shared interest in better serving our beneficiaries.
- Develops national Medicare eligibility, enrollment, entitlement, coordination of benefits, managed care enrollment and disenrollment and appeals process policies and procedures necessary to assure the effective administration of the Medicare program, including the development of related statutory proposals.
- Coordinates beneficiary-centered information, education and service initiatives.
- Develops and tests new and innovative methods to improve beneficiary aspects of health care delivery systems through Title XVIII and XIX demonstrations and other creative approaches to meeting the needs of Agency beneficiaries.
- Assures in coordination with other Centers and Offices, that the activities of Medicare contractors, including managed care plans, agents and State Agencies meet the Agency's

requirements on matters concerning beneficiaries and other consumers.

• Plans and administers the contracts and grants related to beneficiary and customer service, including the Information Counseling and Assistance grants.

• During the period of transition to the Medicare Transaction System, coordinates all aspects of program direction and contract management and oversight of the current Medicare fiscal intermediaries and carriers and MTSI contractors.

11. Center for Health Plans and Providers (FAR)

• Serves as the focal point for all Agency interactions with managed health care organizations and health care providers for issues relating to Agency programs' policy and operations.

• Develops purchasing strategies that will improve the quality of health care choices for beneficiaries.

• Develops national policies and procedures related to the development, qualification and compliance of health maintenance organizations, competitive medical plans and other health care delivery systems and purchasing arrangements (such as prospective pay, case management, differential payment, selective contracting, etc.) necessary to assure the effective administration of the Agency's programs, including the development of statutory proposals.

• Monitors providers', health plans' and other entities' conformance with: Quality standards (other than those directly related to survey and certification); policies related to scope of benefits; and other statutory, regulatory, and contractual provisions.

• Based on medical review data, develops payment mechanisms, administrative mechanisms, and regulations to ensure that HCFA is purchasing medically necessary services in both fee-for-service and managed care.

• Writes payment and benefit-related instructions for Medicare contractors.

• Handles all phases of contracts with managed health care organizations eligible to provide care to Medicare beneficiaries.

• Is the primary point of contact and liaison with other public and private purchasers, except the States, for the purposes of developing collaborative purchasing, management, quality assurance, oversight, and other strategies and projects.

• Defines the scope of Medicare benefits and develops national payment policies as necessary to assure the effective administration of the Agency's programs, including the development of related statutory proposals.

• Coordinates the administration of individual benefits to assure appropriate focus on long term care, where applicable, and assumes responsibility for the operational and demonstration efforts related to the payment aspects of long term care and post-acute care services.

• Designs and conducts payment, purchasing, and benefits demonstrations.

• Develops Agency medical coding policies related to payments.

• Provides administrative support to the Practicing Physician Advisory Council.

12. Center for Medicaid and State Operations (FAS)

• Serves as the focal point for all Agency interactions with States and local governments (including the Territories) and Native American and Alaskan Native tribes.

• Develops national Medicaid policies and procedures which support and assure effective State program administration and beneficiary protection. In partnership with the States, evaluates the success of State agencies in carrying out their responsibilities and, as necessary, assists the States in correcting problems and improving the quality of their operations.

• Develops, interprets, and applies specific laws, regulations, and policies that directly govern the financial operation and management of the Medicaid program and the related interactions with the States and regional offices.

• Develops national policies and procedures to support and assure appropriate State implementation of the rules and processes governing group and individual health insurance markets and the sale of health insurance policies that supplement Medicare coverage.

• In coordination with other components, develops, implements, evaluates and refines standardized provider performance measures used within provider certification programs. Supports States in their use of standardized measures for provider feedback and quality improvement activities. Develops, implements and supports the data collection and analysis systems needed by States to administer the certification program.

• Reviews, approves and conducts oversight of Medicaid managed care waiver programs. Provides assistance to States and external customers on all Medicaid managed care issues.

• Develops national policies and procedures on Medicaid automated claims/ encounter processing and information retrieval systems such as the Medicaid Management Information System (MMIS) and integrated eligibility determination systems.

• In coordination with the Office of Financial Management, directs, coordinates, and monitors program integrity efforts and activities by States and regions. Works with the Office of Financial Management to provide input in the development of program integrity policy.

• Through administration of the home and community based services program and policy collaboration with other Agency components and the States, promotes the appropriate choice and continuity of quality services available to frail elderly, disabled and chronically ill beneficiaries.

• Develops and tests new and innovative methods to improve the Medicaid program through demonstrations and best practices including managing review, approval, and oversight of the Section 1115 demonstrations.

• Directs the planning, coordination, and implementation of the survey, certification, and enforcement programs for all Medicare and Medicaid providers and suppliers, and for laboratories under the auspices of the Clinical Laboratory Improvement Act (CLIA). Reviews and approves applications by States for ''exemption'' from CLIA and applications from private accreditation organizations for deeming authority. Develops assessment techniques and protocols for periodically evaluating the performance of these entities. Monitors the performance of proficiency testing programs under the auspices of CLIA.

• Provides leadership for the Agency in the area of intergovernmental affairs. Advises the Administrator and other Agency components on program matters which affect other units and levels of government. Coordinates activities with the Office of the Secretary's intergovernmental affairs officials.

13. Northeastern Consortium (FAU)

• Directs the planning, coordination, and implementation of the programs under Titles XI, XVIII, and XIX of the Social Security Act and related statutes within the Agency's regional/field offices that comprise the Consortium.

• Provides executive leadership and direction to the Agency's Regional Administrator(s) in the Consortium.

• Assures that the Agency's programs are carried out in the most effective and efficient manner within the Consortium, and that they are coordinated both at the

consortium level and with the Agency's headquarters' offices.

• Provides a Consortium-wide perspective to the Agency's Administrator and other members of the Executive Council in such activities as strategic planning, determining the effectiveness of the Agency's programs and policies, budget formulation and execution, legislation, and administrative management.

• Assures that the Agency's national policies, programs and special initiatives are implemented effectively throughout the Consortium. Conducts local projects to improve the quality of medical care provided to beneficiaries and to control fraud, abuse and waste in the Agency's programs.

• Evaluates progress in the administration of the Agency's programs in the Consortium, ensuring that required actions are taken to direct or redirect efforts and/or resources to achieve program objectives.

• Working with the Regional Administrator(s) in the Consortium and the Agency's headquarters' leadership, assures that the information needs of the Medicare and Medicaid beneficiaries are fully understood and met, to the maximum degree possible. In association with other Agency components, maintains an understanding of the health care market that is operating in the Consortium in order to allow the Agency to adapt to changes in that market when appropriate.

• Assures that the Regional Administrator(s) in the Consortium Fully coordinate the Agency's programs with other Health and Human Services' components, other Federal agencies, the Agency's contractors, State and local governments, professional associations, other interested groups, and the Agency's beneficiaries and/or representatives in their respective region.

• Working with the Agency's headquarters, manages the Consortium's administrative budget, to include the planning and allocation of resources to the regional offices comprising the Consortium.

14. Southern Consortium (FAV)

• Directs the planning, coordination, and implementation of the programs under Titles XI, XVIII, and XIX of the Social Security Act and related statutes within the Agency's regional/field offices that comprise the Consortium.

• Provides executive leadership and direction to the Agency's Regional Administrator(s) in the Consortium.

• Assures that the Agency's programs are carried out in the most effective and efficient manner within the Consortium, and that they are coordinated both at the consortium level and with the Agency's headquarters' offices.

• Provides a Consortium-wide perspective to the Agency's Administrator and other members of the Executive Council in such activities as strategic planning, determining the effectiveness of the Agency's programs and policies, budget formulation and execution, legislation, and administrative management.

• Assures that the Agency's national policies, programs and special initiatives are implemented effectively throughout the Consortium. Conducts local projects to improve the quality of medical care provided to beneficiaries and to control fraud, abuse and waste in the Agency's programs.

• Evaluates progress in the administration of the Agency's programs in the Consortium, ensuring that required actions are taken to direct or redirect efforts and/or resources to achieve program objectives.

• Working with the Regional Administrator(s) in the Consortium and the Agency's headquarters' leadership, assures that the information needs of the Medicare and Medicaid beneficiaries are fully understood and met, to the maximum degree possible. In association with other Agency components, maintains an understanding of the health care market that is operating in the Consortium in order to allow the Agency to adapt to changes in that market when appropriate.

• Assures that the Regional Administrator(s) in the Consortium fully coordinate the Agency's programs with other Health and Human Services' components, other Federal agencies, the Agency's contractors, State and local governments, professional associations, other interested groups, and the Agency's beneficiaries and/or representatives in their respective region.

• Working with the Agency's headquarters, manages the Consortium's administrative budget, to include the planning and allocation of resources to the regional offices comprising the Consortium.

15. Midwestern Consortium (FAW)

• Directs the planning, coordination, and implementation of the programs under Titles XI, XVIII, and XIX of the Social Security Act and related statutes within the Agency's regional/field offices that comprise the Consortium.

• Provides executive leadership and direction to the Agency's Regional Administrator(s) in the Consortium.

• Assures that the Agency's programs are carried out in the most effective and efficient manner within the Consortium, and that they are coordinated both at the consortium level and with the Agency's headquarters' offices.

• Provides a Consortium-wide perspective to the Agency's Administrator and other members of the Executive Council in such activities as strategic planning, determining the effectiveness of the Agency's programs and policies, budget formulation and execution, legislation, and administrative management.

• Assures that the Agency's national policies, programs and special initiatives are implemented effectively throughout the Consortium. Conducts local projects to improve the quality of medical care provided to beneficiaries and to control fraud, abuse and waste in the Agency's programs.

• Evaluates progress in the administration of the Agency's programs in the Consortium, ensuring that required actions are taken to direct or redirect efforts and/or resources to achieve program objectives.

• Working with the Regional Administrator(s) in the Consortium and the Agency's headquarters' leadership, assures that the information needs of the Medicare and Medicaid beneficiaries are fully understood and met, to the maximum degree possible. In association with other Agency components, maintains an understanding of the health care market that is operating in the Consortium in order to allow the Agency to adapt to changes in that market when appropriate.

• Assures that the Regional Administrator(s) in the Consortium fully coordinate the Agency's programs with other Health and Human Services' components, other Federal agencies, the Agency's contractors, State and local governments, professional associations, other interested groups, and the Agency's beneficiaries and/or representatives in their respective region.

• Working with the Agency's headquarters, manages the Consortium's administrative budget, to include the planning and allocation of resources to the regional offices comprising the Consortium.

16. Western Consortium (FAX)

• Directs the planning, coordination, and implementation of the programs under Titles XI, XVIII, and XIX of the Social Security Act and related statutes within the Agency's regional/field offices that comprise the Consortium.

• Provides executive leadership and direction to the Agency's Regional Administrator(s) in the Consortium.

• Assures that the Agency's programs are carried out in the most effective and efficient manner within the Consortium, and that they are coordinated both at the consortium level and with the Agency's headquarters' offices.

• Provides a Consortium-wide perspective to the Agency's Administrator and other members of the Executive Council in such activities as strategic planning, determining the effectiveness of the Agency's programs and policies, budget formulation and execution, legislation, and administrative management.

• Assures that the Agency's national policies, programs and special initiatives are implemented effectively throughout the Consortium. Conducts local projects to improve the quality of medical care provided to beneficiaries and to control fraud, abuse and waste in the Agency's programs.

• Evaluates progress in the administration of the Agency's programs in the Consortium, ensuring that required actions are taken to direct or redirect efforts and/or resources to achieve program objectives.

• Working with the Regional Administrator(s) in the Consortium and the Agency's headquarters' leadership, assures that the information needs of the Medicare and Medicaid beneficiaries are fully understood and met, to the maximum degree possible. In association with other Agency components, maintains an understanding of the health care market that is operating in the Consortium in order to allow the Agency to adapt to changes in that market when appropriate.

• Assures that the Regional Administrator(s) in the Consortium fully coordinate the Agency's programs with other Health and Human Services' components, other Federal agencies, the Agency's contractors, State and local governments, professional associations, other interested groups, and the Agency's beneficiaries and/or representatives in their respective region.

• Working with the Agency's headquarters, manages the Consortium's administrative budget, to include the planning and allocation of resources to the regional offices comprising the Consortium.

Dated: April 19, 1997.

**Bruce Vladeck**

*Administrator, Health Care Financing Administration.*

[FR Doc. 97–11437 Filed 5–1–97; 8:45 am]

BILLING CODE 4120–01–P

---

## DEPARTMENT OF HEALTH AND HUMAN SERVICES

### National Institutes of Health

### National Institute on Aging; Notice of Closed Meetings

Pursuant to Section 10(d) of the Federal Advisory Committee Act, as amended (5 U.S.C. Appendix 2), notice is hereby given of the following meetings:

*Name of SEP:* National Institute on Aging Special Emphasis Panel Topic of Sleep/Wake Regulation in Elderly Persons (Teleconference).

*Date of Meeting:* May 12, 1997.

*Time of Meeting:* 1:00 to 2:00 p.m.

*Place of Meeting:* National Institute on Aging, Gateway Building, Room 2C212, 7201 Wisconsin Avenue, Bethesda, Maryland 20892.

*Purpose/Agenda:* To review of grant application.

*Contact Person:* Dr. Arthur D. Schaerdel, Scientific Review Administrator, Gateway Building, Room 2C212, National Institutes of Health, Bethesda, Maryland 20892–9205, (301) 496–9666.

This notice is being published less than 15 days prior to the above meeting due to the urgent need to meet timing limitations imposed by the review and funding cycle.

*Name of SEP:* National Institute on Aging Special Emphasis Panel Establish Training Programs in Geriatric Medicine (Teleconference).

*Date of Meeting:* May 20, 1997.

*Time of Meeting:* 1:00 to 2:00 p.m.

*Place of Meeting:* National Institute on Aging, Gateway Building, Room 2C212, 7201 Wisconsin Avenue, Bethesda, Maryland 20892.

*Purpose/Agenda:* To review a grant application.

*Contact Person:* Dr. Arthur D. Schaerdel, Scientific Review Administrator, Gateway Building, Room 2C212, National Institutes of Health, Bethesda, Maryland 20892–9205, (301) 496–9666.

*Name of SEP:* National Institute on Aging Special Emphasis Panel Support a Conference on Aging at a Major Medical School (Teleconference).

*Date of Meeting:* May 21, 1997.

*Time of Meeting:* 1:00 to 2:00 p.m.

*Place of Meeting:* National Institute on Aging, Gateway Building, Room 2C212, 7201 Wisconsin Avenue, Bethesda, Maryland 20892.

*Purpose/Agenda:* To review a grant application.

*Contact Person:* Dr. Arthur D. Schaerdel, Scientific Review Administrator, Gateway Building, Room 2C212, National Institutes of Health, Bethesda, Maryland 20892–9205, (301) 496–9666.

*Name of Committee:* National Institute on Aging Initial Review Group Neurosciences of Aging Review Committee.

*Dates of Meeting:* June 9–11, 1997.

*Times of Meeting:* June 9—7:00 p.m. to recess; June 10—9:00 a.m. to recess; June 11—9:00 a.m. to adjournment.

*Place of Meeting:* Double Tree Hotel, 1750 Rockville Pike, Rockville, Maryland 20852.

*Purpose/Agenda:* To review grant applications.

*Contact Person:* Dr. Maria Mannarino, Dr. Louise Hsu, Scientific Review Administrators, Gateway Building, Room 2C212, National Institutes of Health, Bethesda, Maryland 20892–9205, (301) 496–9666.

These meetings will be closed in accordance with the provisions set forth in secs. 552b(c)(4) and 552b(c)(6), Title 5, U.S.C. Applications and/or proposals and the discussions could reveal confidential trade secrets or commercial property such as patentable material and personal information concerning individuals associated with the applications and/or proposals, the disclosure of which would constitute a clearly unwarranted invasion of personal privacy.

(Catalog of Federal Domestic Assistance Program No. 93.866, Aging Research, National Institutes of Health)

Dated: April 28, 1997.

**LaVerne Y. Stringfield,**

*Committee Management Officer, NIH.*

[FR Doc. 97–11426 Filed 5–1–97; 8:45 am]

BILLING CODE 4140–01–M

---

## DEPARTMENT OF HEALTH AND HUMAN SERVICES

### National Institutes of Health

### National Institute of Diabetes and Digestive and Kidney Diseases; Meeting of the National Diabetes and Digestive and Kidney Diseases Advisory Council and Its Subcommittees

Pursuant to Pub. L. 92–463, notice is hereby given of a meeting of the National Diabetes and Digestive and Kidney Diseases Advisory Council and its subcommittees, National Institute of Diabetes and Digestive and Kidney Diseases, on May 28–29, 1997. The meeting of the full Council will be open to the public on May 28, from 8:30 a.m. to 12:00 p.m. in Conference Room 6, Building 31C, National Institutes of Health, Bethesda, Maryland, to discuss administrative issues relating to Council business and special reports. The following subcommittee meetings will be open to the public May 28 from 1:00 p.m. to 2:00 p.m.: Diabetes, Endocrine and Metabolic Diseases Subcommittee meeting will be held in Conference Room 6, Building 31C; Digestive

Diseases and Nutrition Subcommittee meeting will be held in Conference Room 7, Building 31C; and Kidney, Urologic and Hematologic Diseases Subcommittee meeting will be held in Conference Room 9A52, Building 31A. Attendance by the public will be limited to space available.

In accordance with the provisions set forth in secs. 552b(c)(4) and 552b(c)(6), Title 5, U.S.C. and sec. 10(d) of Pub. L. 92–463, the meetings of the subcommittees and full Council will be closed to the public for the review, discussion and evaluation of individual grant applications. The following subcommittees will be closed to the public on May 28th, from 2:00 p.m. to 5:00 p.m. and again on May 29th from 8:30 a.m. to 10:00 a.m.: Diabetes, Endocrine and Metabolic Diseases Subcommittee; Digestive Diseases and Nutrition Subcommittee; and Kidney, Urologic and Hematologic Diseases Subcommittee. The full Council will meet in closed session on May 29th from 10:00 a.m. to 11:00 a.m. in Conference Room 6, Building 31C. These deliberations, whether held in a subcommittee or in the full council, could reveal confidential trade secrets or commercial property, such as patentable materials, and personal information concerning individuals associated with the applications, disclosure of which would constitute a clearly unwarranted invasion of personal privacy.

A final open session of the full Council will be held from 11:00 a.m. to 12:00 p.m.

For any further information, and for individuals who plan to attend and need special assistance such as sign language interpretation or other reasonable accommodations, please contact Dr. Walter Stolz, Executive Secretary, National Diabetes and Digestive and Kidney Diseases Advisory Council, NIDDK, Natcher Building, Room 6AS–25C, Bethesda, Maryland 20892, (301) 594–8834, in advance of the meeting.

In addition, upon request, a summary of the meeting and roster of the members may be obtained from the Committee Management Office, NIDDK, Building 45, Room 6AS–37J, National Institutes of Health, Bethesda, Maryland 20892, (301) 594–8892.

(Catalog of Federal Domestic Assistance Program No. 93.847–849, Diabetes, Endocrine and Metabolic Diseases; Digestive Diseases and Nutrition; and Kidney Diseases, Urology and Hematology Research, National Institutes of Health.)

Dated: April 28, 1997.

**Laverne Stringfield,**

*Committee Management Officer, NIH.*

[FR Doc. 97–11427 Filed 5–1–97; 8:45 am]

BILLING CODE 4140–01–M

---

## DEPARTMENT OF HEALTH AND HUMAN SERVICES

### National Institutes of Health

### National Institute of Arthritis and Musculoskeletal and Skin Diseases; Notice of Closed Meeting

Pursuant to Section 10(d) of the Federal Advisory Committee Act, as amended (5 U.S.C. Appendix 2), notice is hereby given of the following National Institute of Arthritis and Musculoskeletal and Skin Diseases Special Emphasis Panel (SEP) meeting:

*Name of SEP:* NIAMS SEP MAMDC Review Meeting.

*Date:* June 23–25, 1997.

*Time:* June 23–8:30 a.m.–5:30 p.m.; June 24–8:30 a.m.–5:30 p.m.; June 25–8:30 a.m.–adjournment.

*Place:* Bethesda Marriott, 5151 Pooks Hill Road, Bethesda, Maryland 20814.

*Contact Person:* Aftab A. Ansari, Ph.D., Scientific Review Administrator, Natcher Building, 45 Center Drive, Rm 5AS–25U, Bethesda, Maryland 20892–6500, Telephone: 301–594–4952.

*Purpose/Agenda:* To evaluate and review research grant applications.

This meeting will be closed in accordance with the provisions set forth in sections 552b(c)(4) and 552b(c)(6), Title 5 U.S.C. The discussion of these applications could reveal confidential trade secrets or commercial property such as patentable material and personal information concerning individuals associated with the applications, the disclosure of which would constitute a clearly unwarranted invasion of personal privacy.

(Catalog of Federal Domestic Assistance Program Nos. [93.846, Project Grants in Arthritis, Musculoskeletal and Skin Diseases Research], National Institutes of health, HHS)

Dated: April 28, 1997.

**LaVerne Y. Stringfield,**

*Committee Management Officer, NIH.*

[FR Doc. 97–11429 Filed 5–1–97; 8:45 am]

BILLING CODE 4140–01–M

---

## DEPARTMENT OF HEALTH AND HUMAN SERVICES

### National Institutes of Health

### Division of Research Grants; Notice of Closed Meetings

Pursuant to Section 10(d) of the Federal Advisory Committee Act, as amended (5 U.S.C. Appendix 2), notice is hereby given of the following Division of Research Grants Special Emphasis Panel (SEP) meetings:

*Purpose/Agenda:* To review individual grant applications.

*Name of SEP:* Clinical Sciences.

*Date:* April 30, 1997.

*Time:* 1:00 p.m.

*Place:* NIH, Rockledge 2, Room 4114, Telephone Conference.

*Contact Person:* Dr. Scott Osborne, Scientific Review Administrator, 6701 Rockledge Drive, Room 4114, Bethesda, Maryland 20892, (301) 435–1782.

*Name of SEP:* Clinical Sciences.

*Date:* April 30, 1997.

*Time:* 3:00 p.m.

*Place:* NIH, Rockledge 2, Room 4114, Telephone Conference.

*Contact Person:* Dr. Scott Osborne, Scientific Review Administrator, 6701 Rockledge Drive, Room 4114, Bethesda, Maryland 20892, (301) 435–1782.

This notice is being published less than 15 days prior to the above meetings due to the urgent need to meet timing limitations imposed by the grant review and funding cycle.

The meetings will be closed in accordance with the provisions set forth in secs. 552b(c)(4) and 552b(c)(6), Title 5, U.S.C. Applications and/or proposals and the discussions could reveal confidential trade secrets or commercial property such as patentable material and personal information concerning individuals associated with the applications and/or proposals, the disclosure of which would constitute a clearly unwarranted invasion of personal privacy.

(Catalog of Federal Domestic Assistance Program Nos. 93.306, 93.333, 93.337, 93.393–93.396, 93.837–93.844, 93.846–93.878, 93.292, 93.893, National Institutes of Health, HHS)

Date: April 28, 1997.

**LaVerne Y. Stringfield,**

*Committee Management Officer, NIH.*

[FR Doc. 97–11428 Filed 5–1–97; 8:45 am]

BILLING CODE 4140–01–M

---

## DEPARTMENT OF HEALTH AND HUMAN SERVICES

### Substance Abuse and Mental Health Services Administration (SAMHSA)

### Notice of Meetings

Pursuant to Public Law 92–463, notice is hereby given of the following meetings of the SAMHSA Special Emphasis Panel II in June.

A summary of the meetings may be obtained from: Ms. Dee Herman, Committee Management Liaison, SAMHSA Office of Extramural Activities Review, 5600 Fishers Lane, Room 17–89, Rockville, Maryland 20857. Telephone: (301) 443–4783.

Substantive program information may be obtained from the individual named as Contact for the meetings listed below.

The meetings will include the review, discussion and evaluation of individual contract proposals. These discussions could reveal personal information concerning individuals associated with the proposals and confidential and financial information about an individual's proposal. These discussions may also reveal information about procurement activities exempt from disclosure by statute and trade secrets and commercial or financial information obtained from a person and privileged and confidential. Accordingly, the meetings are concerned with matters exempt from mandatory disclosure in Title 5 U.S.C. 552b(c) (3), (4), and (6) and 5 U.S.C. App. 2, § 10(d).

*Committee Name*: SAMHSA Special Emphasis Panel II.
*Meeting Dates:* June 6, 1997.
*Place*: DoubleTree Hotel, Randolph Room, 1750 Rockville Pike, Rockville, MD 20852.
*Closed*: June 6, 1997 8:30 a.m.–5:00 p.m.
*Contact:* Pamela Roddy, Ph.D., 17–89, Parklawn Building, Telephone: (301) 443–1001 and FAX: (301) 443–3437.

*Committee Name*: SAMHSA Special Emphasis Panel II.
*Meeting Dates:* June 10–13, 1997.
*Place*: DoubleTree Hotel, Randolph Room, 1750 Rockville Pike, Rockville, MD 20852.
*Closed*: June 10–12, 1997 8:30 a.m.–5:00 p.m.; June 13, 1997 8:30 a.m.—Adjournment.
*Contact:* Ferdinand W. Hui, Ph.D., 17–89, Parklawn Building, Telephone: (301) 443–9919 and FAX: (301) 443–3437.

*Committee Name*: SAMHSA Special Emphasis Panel II.
*Meeting Dates:* June 12, 1997.
*Place*: DoubleTree Hotel, Rockville Room, 1750 Rockville Pike, Rockville, MD 20852.
*Closed*: June 12, 1997 8:30 a.m.–5:00 p.m.
*Contact:* Pamela Roddy, Ph.D., 17–89, Parklawn Building, Telephone: (301) 443–1001 and FAX: (301) 443–3437.

Dated: April 28, 1997.

**Jeri Lipov,**

*Committee Management Officer, SAMHSA.*

[FR Doc. 97–11440 Filed 5–1–97; 8:45 am]

BILLING CODE 4162–20–P

## DEPARTMENT OF HOUSING AND URBAN DEVELOPMENT

**[Docket No. FR–4235–N–01]**

### Federal Property Suitable as Facilities To Assist the Homeless

**AGENCY:** Office of the Assistant Secretary for Community Planning and Development, HUD.

**ACTION:** Notice.

**SUMMARY:** This Notice identifies unutilized, underutilized, excess, and surplus Federal property reviewed by HUD for suitability for possible use to assist the homeless.

**EFFECTIVE DATE:** May 2, 1997.

**FOR FURTHER INFORMATION CONTACT:** Mark Johnston, Department of Housing and Urban Development, Room 7256, 451 Seventh Street SW, Washington, DC 20410; telephone (202) 708–1226; TDD number for the hearing- and speech-impaired (202) 708–2565, (these telephone numbers are not toll-free), or call the toll-free Title V information line at 1–800–927–7588.

**SUPPLEMENTARY INFORMATION:** In accordance with the December 12, 1988 court order in *National Coalition for the Homeless* v. *Veterans Administration*, No. 88–2503–OG (DDC), HUD publishes a Notice, on a weekly basis, identifying unutilized, underutilized, excess and surplus Federal buildings and real property that HUD has reviewed for suitability for use to assist the homeless. Today's Notice is for the purpose of announcing that no additional properties have been determined suitable or unsuitable this week.

Dated: April 24, 1997.

**Jacquie M. Lawing,**

*General Deputy Assistant Secretary.*

[FR Doc. 97–11103 Filed 5–1–97; 8:45 am]

BILLING CODE 4210–01–M

## DEPARTMENT OF THE INTERIOR

### Bureau of Land Management

**[CO–050–1220–00]**

### Front Range Resource Advisory Council (Colorado) Meeting

**AGENCY:** Bureau of Land Management, Interior.

**ACTION:** Notice of meeting.

**SUMMARY:** In accordance with the Federal Advisory Committee Act of 1972 (FACA), 5 U.S.C. Appendix, notice is hereby given that the next meeting of the Front Range Resource Advisory Council (Colorado) will be held on May 15, 1997 in Canon City, Colorado.

The meeting is scheduled to begin at 9:00 a.m. at the Bureau of Land Management's (BLM) Canon City District Office, 3170 East Main Street, Canon City, Colorado. The meeting will be a field trip to look at a sample area where the Standards are going to be implemented and that has multiple issues and impacts.

All Resource Advisory Council meetings are open to the public. Interested persons may make oral statements to the Council at 9:15 a.m. or written statements may be submitted for the Council's consideration. The District Manager may limit the length of oral presentations depending on the number of people wishing to speak.

**DATES:** The meeting is scheduled for Thursday May 15, 1997 from 9 a.m. to 4 p.m.

**ADDRESSES:** For further information, contact Ken Smith, Bureau of Land Management (BLM), Canon City District Office, 3170 East Main Street, Canon City Colorado 81212; Telephone (719) 269–8500; TDD (719) 269–8597.

**SUPPLEMENTARY INFORMATION:** Summary minutes for the Council meeting will be maintained in the Canon City District Office and will be available for public inspection and reproduction during regular business hours within thirty (30) days following the meeting.

**Adrian Neisius,**

*Acting District Manager.*

[FR Doc. 97–11400 Filed 5–1–97; 8:45 am]

BILLING CODE 4310–JB–P

## DEPARTMENT OF THE INTERIOR

### Bureau of Land Management

**[CA–010–1220–00]**

### Meeting of the Bakersfield Resource Advisory Council

**AGENCY:** Bureau of Land Management, Department of the Interior.

**ACTION:** Meeting of the Bakersfield Resource Advisory Council.

**SUMMARY:** Pursuant to the authorities in the Federal Advisory Committee Act (Pub. L. 92–463) and the Federal Land Policy and Management Act of 1976 (sec. 309), the Bureau of Land Management Resource Advisory Council for the Bakersfield District will meet in Auburn, California to discuss fire management.

**DATES:** May 2–3, 1997.

**ADDRESSES:** Auburn Inn, 1875 Auburn Ravine Road, Auburn, California.

**SUPPLEMENTARY INFORMATION:** The 12 member Bakersfield Resource Advisory Council is appointed by the Secretary of the Interior to advise the Bureau of Land Management on public land issues.The Council will meet on Friday and Saturday, May 2–3, 1997, beginning at 8:00 a.m. both days to discuss the BLM fire management program. There will be a field trip to a prescribed burn site in the 'Inimim Forest on Friday afternoon, May 2, and a public comment period beginning at 1 p.m. Saturday, May 3. The public may discuss any public land issue during the public comment period, and written comments will be accepted during the meeting or at the address below. The entire meeting is open to the public. Anyone wishing to

take part in the field trip must provide their own transportation.

**FOR FURTHER INFORMATION CONTACT:** Larry Mercer, Public Affairs Officer, Bureau of Land Management, 3801 Pegasus Drive, Bakersfield, CA 93308, telephone 805–391–6010.

Dated: April 22, 1997.

**Larry Mercer,**

*Acting District Manager.*

[FR Doc. 97–11399 Filed 5–1–97; 8:45 am]

BILLING CODE 4310–40–M

## DEPARMENT OF THE INTERIOR

## Bureau of Land Management

**[CA–010–1430–01; CA 37580 and R 2525]**

## Notice of Realty Action; Recreation and Public Purposes (R&PP) Act Classification; California

**AGENCY:** Bureau of Land Management.

**ACTION:** Notice.

**SUMMARY:** The following public lands in Kern County, California have been examined and found suitable for classification for conveyance to the County of Kern under the provisions of the Recreation and Public Purposes Act, as amended (43 U.S.C. 869 et seq.). The lands will not be offered for conveyance until at least 60 days after publication of this notice in the **Federal Register**.

**Mount Diablo Meridian**

*T. 25 S., R. 33 E.*

Section 35
S½S½S½N½,N½SW¼
Containing 120 acres.

AP# 296–070–18

The County of Kern has filed applications to purchase a 120-acre parcel of public land occupied by an existing landfill and where buffer areas and a transfer station will be constructed. The landfill will be closing in 1997 concurrently with construction of the transfer station and the buffer areas. The transfer station will handle non-hazardous solid waste from residential, commercial and industrial sources.

The lands are not needed for Federal purposes. Conveyance is consistent with current BLM land use planning and would be in the public interest.

The patent will be subject to the following terms, conditions, and reservations:

1. Provisions of the Recreation and Public Purposes Act and to all applicable regulations of the Secretary of the Interior.

2. A right-of-way for ditches and canals constructed by the authority of the United States; Act of August 30, 1890 (26 Stat. 391; 43 U.S.C. 945).

3. All minerals shall be reserved to the United States, together with the right to prospect for, mine, and remove the minerals.

4. All valid existing rights documented on the official public land records at the time of patent issuance.

5. Any other reservations that the authorized officer determines appropriate to ensure pubic access and proper management of Federal lands and interests therein.

Detailed information concerning this action is available for review at the office of the Bureau of Land Management, Bakersfield Field Office, 3801 Pegasus Drive, Bakersfield, California.

Upon publication of this notice in the **Federal Register**, the lands will be segregated from all other forms of appropriation under the public land laws, including the general mining laws, except for conveyance under the Recreation and Public Purposes Act and leasing under the mineral leasing laws. For a period of 45 days from the date of publication of this notice, until July 26, 1997, interested persons may submit comments regarding the proposed conveyance or classification of the lands to the Field Office Manager, Bakersfield Field Office, 3801 Pegasus Drive, Bakersfield, CA 93308.

### Classification Comments

Interested parties may submit comments involving the suitability of the land for a transfer station, landfill and buffer area. Comments on the classification are restricted to whether the land is physically suited for the proposal, whether the use will maximize the future use or uses of the land, whether the use is consistent with local planning and zoning, or if the use is consistent with State and Federal programs.

### Application Comments

Interested parties may submit comments regarding the specific use proposed in the application and plan of development, whether the BLM followed proper administrative procedures in reaching the decision, or any other factor not directly related to the suitability of the land for a transfer station, landfill and buffer area.

Any adverse comments will be reviewed by the State Director. In the absence of any adverse comments, the classification will become effective 60 days from the date of publication of this notice in the **Federal Register**.

Dated: April 22, 1997.

**Ron Fellows,**

*Field Office Manager.*

[FR Doc. 97–11402 Filed 5–1–97; 8:45 am]

BILLING CODE 4310–40–M

## DEPARTMENT OF THE INTERIOR

## Bureau of Land Management

**[NV–930–1430–01; NVN 063921]**

## Notice of Realty Action; Termination of Recreation and Public Purposes Act Classification; Carson City, NV

**AGENCY:** Bureau of Land Management, Interior.

**ACTION:** Notice.

**SUMMARY:** This action terminates Recreation and Public Purposes (R&PP) Classification N 063921 in its entirety. The land will be opened to the public land laws, including the mining laws.

**EFFECTIVE DATE:** The land will be open to entry effective 10 am on June 2, 1997.

**FOR FURTHER INFORMATION CONTACT:** Charles J. Kihm, Bureau of Land Management, Carson City District, 1535 Hot Springs Road, Carson City, Nevada 89706, 702–885–6000.

**SUPPLEMENTARY INFORMATION:** Pursuant to the authority delegated by Appendix 1 of Bureau of Land Management Manual 1203 dated April 14, 1987, R&PP Classification N 062268 is hereby terminated in its entirety on the following described public land:

**Mount Diablo Meridian, Nevada**

*T. 15N., R. 20E.,*

Sec. 32, W½NE¼NW¼SW¼,
E½NW¼NW¼SW¼.
Containing 10.00 acres.

Classification No. 62–2 made pursuant to the Act of June 14, 1926, as amended (43 U.S.C. 869 *et seq.*), segregated the public land from all other forms of appropriation under the public land laws, including location under the United States mining laws, but not leasing under the mineral leasing laws. No applications were received and the classification no longer serves any purpose.

At 10 a.m. on June 2, 1997, the land will become open to the operation of the public land laws generally, subject to valid existing rights, the provisions of existing withdrawals, and the requirements of applicable law. All valid applications received at or prior to 10 a.m. on June 2, 1997 shall be considered as simultaneously filed at that time. Those received thereafter shall be considered in the order of filing.

At 10 a.m. on June 2, 1997, the land will also be open to location under the United States mining laws. Appropriation of the land under the general mining laws prior to the date and time of restoration is unauthorized. Any such attempted appropriation, including attempted adverse possession under 30 U.S.C. 38, shall vest no rights against the United States. Acts required to establish a location and to initiate a right of possession are governed by State law where not in conflict with Federal law. The Bureau of Land Management will not intervene in disputes between rival locators over possessory rights since Congress has provided for such determination in local courts.

Dated: April 23, 1997.

**Daniel L. Jacquet,**

*Acting Assistant District Manager, Non-Renewable Resources.*

[FR Doc. 97–11401 Filed 5–1–97; 8:45 am]

BILLING CODE 4310–HC–M

## DEPARTMENT OF THE INTERIOR

### National Park Service

### General Management Plan/ Enviornmental Impact Statement for Lake Roosevelt National Recreation Area, Washington

**AGENCY:** National Park Service, Interior.

**ACTION:** Notice of intent to prepare an Environmental Impact Statement.

**SUMMARY:** The National Park Service (NPS) will prepare a General Management Plan/Environmental Impact Statement (GMP/EIS) for the Lake Roosevelt National Recreation Area (formerly Coulee Dam National Recreation Area). The GMP will set forth the basic management philosophy for the next 15–20 years. The NPS will be working closely with representatives of the Colville and Spokane Indian Tribes; the Washington counties of Ferry, Grant, Lincoln, Okanogan, and Stevens; the Bureau of Reclamation; the Bureau of Indian Affairs; the State of Washington; and concerned organizations and private citizens.

Among the major issues likely to be addressed in the Lake Roosevelt GMP/EIS are resource protection, visitor activities, visitor use and levels, development, support facilities, and operations. A full range of alternatives, including ''no action'' and ''minimum requirements'' alternatives, will be considered in the GMP/EIS to address these and other issues that may emerge during the planning process.

Scoping, the process by which the scope of issues to be addressed in the GMP/EIS is identified, will be conducted through a public newsletter and public meetings held during the summer of 1997. Meeting dates, locations, and times will be announced through local media. Representative of Federal, State and local agencies, American Indian tribes, private organizations and individuals from the general public are invited to participate in the scoping process by responding to this notice with written comments. All comments received will become part of the public record and copies of comments, including any names, addresses and telephone numbers provided by respondents, may be released for public inspection. The draft GMP/EIS is expected to be available for public review by September 1998, with the final version of the GMP/EIS and the Record of Decision to be completed by September 1999.

Because the responsibility for approving the GMP/EIS has been delegated to the NPS, the EIS is a ''delegated'' EIS. The responsible official is Stanley T. Albright, Regional Director, Pacific West Region, National Park Service.

**DATES:** Written comments about the scope of issues to be analyzed in the GMP/EIS should be received no later than September 30, 1997.

**ADDRESSES:** Written comments and requests for information concerning the GMP/EIS should be sent to Vaughn Baker, Superintendent, Lake Roosevelt National Recreation Area, 1008 Crest Drive, Coulee Dam, WA 99116–1259, or at telephone number (509) 663–9411.

Dated: April 21, 1997.

**William C. Walters,**

*Deputy Regional Director, Pacific West Region, National Park Service.*

[FR Doc. 97–11431 Filed 5–1–97; 8:45 am]

BILLING CODE 4310–70–P

## DEPARTMENT OF JUSTICE

### Office of Justice Programs

### Bureau of Justice Assistance; Agency Information Collection Activities: Proposed Collection; Comment Request

**ACTION:** Notice of Information Collection Under Emergency Review; Local Law Enforcement Block Grants State Application Kit.

The Department of Justice, Office of Justice Programs, Bureau of Justice Assistance, has submitted the following information collection request to the Office of Management and Budget (OMB) for review and clearance in accordance with the emergency review procedures of the Paperwork Reduction Act of 1995. The proposed information collection is published to obtained comments from the public and affected agencies. Emergency review and approval of this collection has been requested from OMB by May 7, 1997. If granted, the emergency approval is only valid for 180 days. Comments should be directed to OMB, Office of Information and Regulatory Affairs, Attention: Ms. Victoria Wassmer, 202–395–5871, Department of Justice Desk Officer, Washington, DC 20530.

The agency requests written comments and suggestions from the public and affected agencies concerning the proposed collection of information. Your comments should address one or more of the following four points:

(1) Evaluate whether the proposed collection of information is necessary for the proper performance of the functions of the agency, including whether the information will have practical utility;

(2) Evaluate the accuracy of the agency's estimate of the burden of the proposed collection of information, including the validity of the methodology and assumptions used;

(3) Enhance the quality, utility, and clarity of the information to be collected; and

(4) Minimize the burden of the collection of information on those who are to respond, including through the use of appropriate automated, electronic, mechanical, or other technological collection techniques or other forms of information technology, e.g., permitting electronic submission of responses.

Comments and/or suggestions regarding the item(s) contained in this notice, especially regarding the estimated public burden and associated response time should be directed to Laura Burke (phone number and address listed below). If you have additional comments, suggestions, or need a copy of the proposed information collection instrument with instructions, or additional information, please contact Laura Burke, Bureau of Justice Assistance, Office of Justice Programs, US Department of Justice, 633 Indiana Avenue, NW., Washington, DC 20531.

Overview of this information collection:

(1) *Type of Information Collection:* New data collection.

(2) *Title of the Form/Collection:* State Law Enforcement Block Grants State Application Kit.

(3) *Agency form number, if any, and the applicable component of the Department of Justice sponsoring the*

*collection:* Burean of Justice Assistance, Office of Justice Programs, United States Department of Justice.

(4) *Affected public who will be asked or required to respond, as well as a brief abstract: Primary:* State and local units of government. *Other:* None. This data collection will gather information from each eligible jurisdiction wishing to apply to receive funding under this program.

(5) *An estimate of the total number of respondents and the amount of time estimated for an average respondent to respond:* 54 respondents at 30 minutes per response.

(6) *An estimate of the total public burden (in hours) associated with the collection:* 27 annual burden hours.

If additional information is required contact: Mr. Robert B. Briggs, Clearance Officer, United States Department of Justice, Information Management and Security Staff, Justice Management Division, Suite 850, Washington Center, 1001 G Street, NW., Washington, DC 20530.

Dated: April 29, 1997.

**Robert B. Briggs,**

*Department Clearance Officer, United States Department of Justice.*

[FR Doc. 97–11498 Filed 5–1–97; 8:45 am]

BILLING CODE 4410–18–M

## DEPARTMENT OF JUSTICE

### Antitrust Division

### Federal Trade Commission; Correction

**AGENCIES:** Department of Justice and Federal Trade Commission.

**ACTION:** Correction.

**SUMMARY:** In notice Request for Comments on Proposed Agreement Between the Government of the United States of America and the Government of Australia on Mutual Antitrust Enforcement Assistance which appears in Vol. 62, No. 79 on page 20022, in the issue of Thursday, April 24, 1997, the following correction should be made:

On page 20022 in the third column, the second paragraph, line 8, the telephone number listed as 202–514–4510 is incorrect.

Instead of 202–514–4510, the number should read 202–514–2410.

Dated: April 25, 1997.

**A. Douglas Melamed,**

*Deputy Assistant Attorney General, Antitrust Division, Department of Justice.*

**Debra A. Valentine,**

*Assistant Director for International Antitrust, Bureau of Competition, Federal Trade Commission.*

[FR Doc. 97–11281 Filed 5–1–97; 8:45 am]

BILLING CODE 4410–11–M

## DEPARTMENT OF JUSTICE

### Immigration and Naturalization Service

### Agency Information Collection Activities: Proposed Collection; Comment Request

**ACTION:** Extension of existing collection; application—checkpoint pre-enrolled access lane.

The Department of Justice, Immigration and Naturalization Service (Service) has submitted the following information collection request (ICR) for review and clearance in accordance with the Paperwork Reduction Act of 1995. The proposed information collection is published to obtain comments from the public and affected agencies. Comments are encouraged and will be accepted for ''sixty days'' from July 1, 1997.

Written comments and suggestions from the public and affected agencies concerning the proposed collection of information should address one or more of the following four points.

(1) Evaluate whether the proposed collection of information is necessary for the proper performance of the functions of the agency, including whether the information will have practical utility;

(2) Evaluate the accuracy of the agencies estimate of the burden of the proposed collection of information, including the validity of the methodology and assumptions used;

(3) Enhance the quality, utility, and clarity of the information to be collected; and

(4) Minimize the burden of the collection of information on those who are to respond, including through the use of appropriate automated, electronic, mechanical, or other technological collection techniques or other forms of information technology, e.g., permitting electronic submission of responses.

Overview of this information collection:

(1) *Type of Information Collection:* Extension of a currently approved collection.

(2) *Title of the Form/Collection:* Application—Checkpoint Pre-enrolled Access Lane.

(3) *Agency form number, if any, and the applicable component of the Department of Justice sponsoring the collection:* Form I–866. Border Patrol Division, Immigration and Naturalization Service.

(4) *Affected public who will be asked or required to respond, as well as a brief abstract:* Primary: Individuals or Households. The information collection will be used by the Service to determine eligibility for participation in the Checkpoint Pre-enrolled Access Lane (PAL) program for persons and vehicles at immigration checkpoints within the United States.

(5) *An estimate of the total number of respondents and the amount of time estimated for an average respondent to respond:* 12,500 respondents at 32 minutes per response.

(6) *An estimate of the total public burden (in hours) associated with the collection:* 6,625 annual burden hours.

If you have additional comments, suggestions, or need a copy of the proposed information collection instrument with instructions, or additional information, please contact Mr. Richard A. Sloan, 202–616–7600, Director, Policy Directives and Instructions Branch, Immigration and Naturalization Service, U.S. Department of Justice, Room 5307, 425 I Street, NW., Washington, DC 20536.

If additional information is required contact: Mr. Robert B. Briggs, Clearance Officer, United States Department of Justice, Information Management and Security Staff, Justice Management Division, Suite 850, Washington Center, 1001 G Street, NW., Washington, DC 20530.

Dated: April 29, 1997.

**Robert B. Briggs,**

*Department Clearance Officer, United States Department of Justice.*

[FR Doc. 97–11499 Filed 5–1–97; 8:45 am]

BILLING CODE 4410–10–M

## DEPARTMENT OF JUSTICE

### Office of Justice Programs

### Bureau of Justice Assistance; Agency Information Collection Activities: Proposed Collection; Comment Request

**ACTION:** Request for OMB emergency approval; BJA-Byrne formula grant program annual institutionalization survey for subgrants.

The Department of Justice, Office of Justice Programs, Bureau of Justice

Assistance has submitted the following information collection request (ICR) utilizing emergency review procedures, to the Office of Managements and Budget (OMB) for review and clearance in accordance with the Paperwork Reduction Act of 1995. OMB approval has been requested by May 7, 1997. If granted, the emergency approval is only valid for 180 days. Comments should be directed to OMB, Office of Information and Regulatory Affairs, Attention: Ms. Victoria Wassmer, 202–395–5871, Department of Justice Desk Officer, Washington, DC 20503.

During the first 60 days of this same period a regular review of his information collection is also being undertaken. Comments are encouraged and will be accepted until; July 1, 1997. Request written comments and suggestions form the public and affected agencies concerning the proposed collection of information. Your comments should address one or more of the following four points:

(1) Evaluate whether the proposed collection of information is necessary for the proper performance of the functions of the agency/component, including whether the information will have practical utility;

(2) evaluate the accuracy of the agencies/components estimate of the burden of the proposed collection of information, including the validity of the methodology and assumptions used;

(3) enhance the quality, utility, and clarity of the information to be collected; and

(4) minimize the burden of the collection of information on those who are to respond, including through the use of appropriate automated, electronic, mechanical, or other technological collection techniques or other forms of information technology, e.g. permitting electronic submission of responses.

If you have additional comments, suggestions, or need a copy of the proposed information collection instrument with instructions, or additional information, please contact Linda James McKay, 202–514–6638, Bureau of Justice Assistance, Office of Justice Programs, U.S. Department of Justice, 633 Indiana Avenue, NW., Washington, DC 20531.

**Overview of This Information**

*(1) Type of information collection:* New Collection.

*(2) The title of the form/collection:* BJA-Byrne Formula Grant Program Annual Institutionalization Survey for Subgrants.

*(3) The agency form number, if any, and the applicable component of the Department sponsoring the collection:* Bureau of Justice Assistance, Office of Justice Programs, United States Department of Justice.

*(4) Affected public who will be asked or required to respond, as well a brief abstract:*

*Primary:* State Government (State Administrative Agencies).

*Other:* None.

The Byrne Formula Grant Program was created by the Anti-Drug Abuse Act of 1988, and is designed to provide support to its constituency group of state and local criminal justice agencies to initiate innovative projects that respond effectively to crime problems and improve operations of the Nation's criminal justice system.

*(5) An estimate of the total number of respondents and the amount of time estimated for an average respondent to respond/reply:*

The time burden of the 56 respondents to complete the surveys for all 3,936 projects funded in FY 1992, is 5 minutes per survey. The time burden of the 56 respondents to complete the surveys for the estimated 520 projects that were expected to continue after Byrne funding ceased in FY 1992, but were not re-funded, is 45 minutes per survey.

*(6) An estimate of the total public burden (in hours) associated with the collection:*

The total annual hour burden to complete surveys for the FY 1992 Byrne-funded projects and those that were not re-funded is 720 annual burden hours.

*If Additional Information is Required Contact:* Mr. Robert B. Briggs, Clearance Officer, United States Department of Justice, Information Management and Security Staff, Justice Management Division, Suite 850, Washington Center, 1001 G Street, NW., Washington, DC 20530.

Dated: April 18, 1997.

**Robert B. Briggs,**

*Department Clearance Officer, United States Department of Justice.*

[FR Doc. 97–11407 Filed 5–1–97; 8:45 am]

**BILLING CODE 4410–18–M**

---

## DEPARTMENT OF JUSTICE

### Office of Justice Programs

### Bureau of Justice Assistance; Agency Information Collection Activities: Proposed Collection; Comment Request

**ACTION:** Notice of Information Collection Under Emergency Review; Local Law Enforcement Block Grants Alu-O'Hara Certification Form.

---

The Department of Justice, Office of Justice Programs, Bureau of Justice Assistance, has submitted the following information collection request to the Office of Management and Budget (OMB) for review and clearance in accordance with the emergency review procedures of the Paperwork Reduction Act of 1995. The proposed information collection is published to obtained comments from the public and affected agencies. Emergency review and approval of this collection has been requested from OMB by May 7, 1997. If granted, the emergency approval is only valid for 180 days. Comments should be directed to OMB, Office of Information and Regulatory Affairs, Attention: Ms. Victoria Wassmer, 202–395–5871, Department of Justice Desk Officer, Washington, DC, 20530.

The agency requests written comments and suggestions from the public and affected agencies concerning the proposed collection of information. Your comments should address one or more of the following four points:

(1) evaluate whether the proposed collection of information is necessary for the proper performance of the functions of the agency, including whether the information will have practical utility;

(2) evaluate the accuracy of the agencies estimate of the burden of the proposed collection of information, including the validity of the methodology and assumptions used;

(3) enhance the quality, utility, and clarity of the information to be collected; and

(4) minimize the burden of the collection of information on those who are to respond, including through the use of appropriate automated, electronic, mechanical, or other technological collection techniques or other forms of information technology, e.g., permitting electronic submission of responses.

Comments and/or suggestions regarding the item(s) contained in this notice, especially regarding the estimated public burden and associated response time should be directed to Laura Burke (phone number and address listed below). If you have additional comments, suggestions, or need a copy of the proposed information collection instrument with instructions, or additional information, please contact Laura Burke, Bureau of Justice Assistance, Office of Justice Programs, U.S. Department of Justice, 633 Indiana Avenue, NW., Washington, DC 20531.

Overview of this information collection:

(1) Type of Information Collection: New data collection.

(2) Title of the Form/Collection: State Law Enforcement Block Grants Alu-O'Hara Certification Form.

(3) Agency form number, if any, and the applicable component of the Department of Justice sponsoring the collection: Bureau of Justice Assistance, Office of Justice Programs, United States Department of Justice.

(4) Affected public who will be asked or required to respond, as well as a brief abstract: Primary: State and local units of government. Other: None. This data collection will gather information from each eligible jurisdiction wishing to apply to receive funding under this program.

(5) An estimate of the total number of respondents and the amount of time estimated for an average respondent to respond: 3200 respondents at 10 minutes per response.

(6) An estimate of the total public burden (in hours) associated with the collection: approximately 530 annual burden hours.

If additional information is required contact: Mr. Robert B. Briggs, Clearance Officer, United States Department of Justice, Information Management and Security Staff, Justice Management Division, Suite 850, Washington Center, 1001 G Street, NW., Washington, DC 20530.

Dated: April 29, 1997.

**Robert B. Briggs,**

*Department Clearance Officer, United States Department of Justice.*

[FR Doc. 97–11500 Filed 5–1–97; 8:45 am]

BILLING CODE 4410–18–M

## DEPARTMENT OF JUSTICE

### Office of Justice Programs

### Bureau of Justice Assistance; Agency Information Collection Activities: Proposed Collection; Comment Request

**ACTION:** Notice of information collection under emergency review; local law enforcement block grants local application kit.

The Department of Justice, Office of Justice Programs, Bureau of Justice Assistance, has submitted the following information collection request to the Office of Management and Budget (OMB) for review and clearance in accordance with the emergency review procedures of the Paperwork Reduction Act of 1995. The proposed information collection is published to obtained comments from the public and affected agencies. Emergency review and approval of this collection has been requested from OMB by May 7, 1997. If granted, the emergency approval is only valid for 180 days. Comments should be directed to OMB, Office of Information and Regulatory Affairs, Attention: Ms. Victoria Wassmer, 202–395–5871, Department of Justice Desk Officer, Washington, DC, 20530.

The agency requests written comments and suggestions from the public and affected agencies concerning the proposed collection of information. Your comments should address one or more of the following four points.

(1) evaluate whether the proposed collection of information is necessary for the proper performance of the functions of the agency, including whether the information will have practical utility;

(2) evaluate the accuracy of the agencies estimate of the burden of the proposed collection of information, including the validity of the methodology and assumptions used;

(3) enhance the quality, utility, and clarity of the information to be collected; and

(4) minimize the burden of the collection of information on those who are to respond, including through the use of appropriate automated, electronic, mechanical, or other technological collection techniques or other forms of information technology, e.g., permitting electronic submission of responses.

Comments and/or suggestions regarding the item(s) contained in this notice, especially regarding the estimated public burden and associated response time should be directed to Laura Burke (phone number and address listed below). If you have additional comments, suggestions, or need a copy of the proposed information collection instrument with instructions, or additional information, please contact Laura Burke, Bureau of Justice Assistance, Office of Justice Programs, U.S. Department of Justice, 633 Indiana Avenue, NW., Washington, DC 20531.

Overview of this information collection:

(1) Type of Information Collection: New data collection.

(2) Title of the Form/Collection: Local Law Enforcement Block Grants Local Application Kit.

(3) Agency form number, if any, and the applicable component of the Department of Justice sponsoring the collection: Bureau of Justice Assistance, Office of Justice Programs, United States Department of Justice.

(4) Affected public who will be asked or required to respond, as well as a brief abstract: Primary: State and local units of government. Other: None. This data collection will gather information from each eligible jurisdiction wishing to apply to receive funding under this program.

(5) An estimate of the total number of respondents and the amount of time estimated for an average respondent to respond: 3200 respondents at 30 minutes per response.

(6) An estimate of the total public burden (in hours) associated with the collection: 1600 annual burden hours.

If additional information is required contact: Mr. Robert B. Briggs, Clearance Officer, United States Department of Justice, Information Management and Security Staff, Justice Management Division, Suite 850, Washington Center, 1001 G Street, NW., Washington, DC 20530.

Dated: April 29, 1997.

**Robert B. Briggs,**

*Department Clearance Officer, United States Department of Justice.*

[FR Doc. 97–11501 Filed 5–1–97; 8:45 am]

BILLING CODE 4410–18–M

## DEPARTMENT OF LABOR

### Office of the Secretary

### Agency Recordkeeping/Reporting Requirements Under Emergency Review by the Office of Management and Budget (OMB)

April 25, 1997.

The Department of Labor has submitted the following (see below) emergency processing public information collection request (ICR) to the Office of Management and Budget (OMB) for review and clearance under the Paperwork Reduction Act of 1995 (P.L. 104–13, 44 U.S.C. Chapter 35). OMB approval has been requested by May 5, 1997. A copy of this ICR, with applicable supporting documentation, may be obtained by calling the Department of Labor Departmental Clearance Officer, Theresa M. O'Malley ((202) 219–5096, x.143).

Comments and questions about the ICR listed below should be forwarded to Office Information and Regulatory Affairs, Attn: OMB Desk Officer for the Employment and Training Administration, Office of Management and Budget, Room 10235, Washington, DC 20503 ((202) 395–7316).

The Office of Management and Budget is particularly interested in comments which:

* evaluate whether the proposed collection of information is necessary for the proper performance of the functions of the agency, including whether the information will have practical utility;

* evaluate the accuracy of the agency's estimate of the burden of the proposed collection of information, including the validity of the methodology and assumptions used;

* enhance the quality, utility, and clarity of the information to be collected; and

* minimize the burden of the collection of information on those who are to respond, including through the use of appropriate automated, electronic, mechanical, or other technological collection techniques or other forms of information technology, e.g., permitting electronic submissions of response.

*Agency:* Employment and Training Administration.

*Title:* Evaluation of the Work Opportunity Tax Credit (WOTC).

*OMB Number:* 1205–NEW.

*Frequency:* One time.

*Affected Public:* State governments and for-profit businesses.

*Number of Respondents:* 82.

*Estimated Time Per Respondent:* 1.05 hours.

*Total Burden Hours:* 86 hours.

*Total Burden Cost (capital/startup):* 0.

*Total Burden Cost (operating/maintaining):* 0.

*Description:* This study will examine the Work Opportunity Tax Credit (WOTC) program, a one-year program that began October 1, 1996. The program provides employers hiring individuals who are certified as members of designated groups a one-time tax credit of up to $2,100 for each individual hired who remains employed for at least 400 hours. Each State Employment Security Agency (SESA) is responsible for certifying individuals as eligible and maintaining records of WOTC-related hiring activity by employers.

The WOTC program is likely to expand substantially, possibly providing a larger tax credit and more inclusive eligibility criteria. The Department of Labor (DOL) wants information that aides in strengthening the program administratively; determines whether there are implements to effective functioning; and describes especially well operated programs and effective practices that can serve as examples to others.

Data will be derived from a 50 State survey of WOTC coordinators and from site visits in four States.

**Theresa M. O'Malley,**

*Departmental Clearance Officer.*

[FR Doc. 97–11468 Filed 5–1–97; 8:45 am]

BILLING CODE 4510–30–M

---

## DEPARTMENT OF LABOR

### Employment and Training Administration

### Notice of Determinations Regarding Eligibility To Apply for Worker Adjustment Assistance and NAFTA Transitional Adjustment Assistance

In accordance with Section 223 of the Trade Act of 1974, as amended, the Department of Labor herein presents summaries of determinations regarding eligibility to apply for trade adjustment assistance for workers (TA–W) issued during the period of April, 1997.

In order for an affirmative determination to be made and a certification of eligibility to apply for worker adjustment assistance to be issued, each of the group eligibility requirements of Section 222 of the Act must be met.

(1) That a significant number or proportion of the workers in the workers' firm, or an appropriate subdivision thereof, have become totally or partially separated,

(2) That sales or production, or both, of the firm or subdivision have decreased absolutely, and

(3) That increases of imports of articles like or directly competitive with articles produced by the firm or appropriate subdivision have contributed importantly to the separations, or threat thereof, and to the absolute decline in sales or production.

### Negative Determinations for Worker Adjustment Assistance

In each of the following cases the investigation revealed that criterion (3) has not been met. A survey of customers indicated that increased imports did not contribute importantly to worker separations at the firm.

*TA–W–33,121; Badger Northland, Inc., Kaukauna, WI*

*TA–W–33,190; Allied Signal, Inc., Parsippany, NJ*

*TA–W–33,320; Unifour Finishers, Hickory, NC*

*TA–W–33,272; CMI Industries, Inc., A.K.A. Clinton Mills, Lydia Plant, Clinton, SC*

*TA–W–33,173 & A; National Apparel, Inc., Carbon Hill, AL and Winfield, AL*

*TA–W–33,004; International Medication Systems, Ltd, South El Monte, CA*

In the following cases, the investigation revealed that the criteria for eligibility have not been met for the reasons specified.

*TA–W–33,311; Pacificorp, Portland, OR*

*TA–W–33,380; Masback Hardwear, Inc., North Bergen, NJ*

*TA–W–33,151; Bryan Industries, Inc., Tulsa, OK PA*

*TA–W–33,114; Highland Packaging Co., Boch Pharmacal Distribution Center, St. Louis, MO*

*TA–W–33,362; Interactive Composition Corp., Pleasant Hill, CA*

*TA–W–33,361; Interactive Composition Corp., Logan, UT*

*TA–W–33,250; Merchants Fast Motor Lines, Abilene, TX and Operating at Various Locations in The Following States: A; TX, B; NM, C; CO, D; OK*

The workers firm does not produce an article as required for certification under Section 222 of the Trade Act of 1974.

*TA–W–33,319; Deluxe Corp, Deluxe Check Printers, New Berlin, WI*

Layoffs were caused by the consolidations operations transfering the production of the subject plant to a plant located in Chicago, IL and other locations in the U.S.

*TA–W–33,086; MESA, Inc., Amarillo, TX*

The investigation revealed that criteria (2) has not been met. Sales or production did not decline during the relevant period as required for certification.

*TA–W–33,305; SPX Corp., Contech Div., Dowagiac, MI*

*TA–W–33,174; Four Seasons Fabrics, New York, NY*

*TA–W–33,142; Simpson Industries, Jackson, MI*

*TA–W–33,015; Sunbeam Corp., Cookeville, TN*

*TA–W–33,163; ABB Air Preheater, Inc., ABB Raymond Div., Enterprise, KS*

*TA–W–33, 138; Webcraft Technologies, Inc., Games Div., North Brunswick, NJ.*

Increased imports did not contribute importantly to worker separations at the firm.

*TA–W–33,260; Allied Signal, Inc., Greenville, OH*

The investigation revealed that criteria (1) and criteria (2) have not been met. A significant number or proportion of the workers did not become totally or partially separated as required for certification. Sales or production did not decline during the relevant period as required for certification.

**Affirmative Determinations for Worker Adjustment Assistance**

The following certifications have been issued; the date following the company name & location for each determination references the impact date for all workers for such determination.

*TA–W–33,379; Leslie Stephens Ltd, Washington, MO: March 10, 1996*

*TA–W–33,105; NSM Anerica, Inc., Gastonia, NC: January 7, 1996*

*TA–W–33,288; Moresource Magnetic Collectibles, Fredericktown, MO; February 26, 1996.*

*TA–W–33,154; West Plains Shoe Co., Inc., West Plains, MO; January 22, 1996.*

*TA–W–33,031; Easton Corp., Engine Components Div., Belmond, IA; December 5, 1995.*

*TA–W–33,309 A & B; Nine West Group, Inc., Flemingsburg, KY, Vanceburg, KY (Shoe Plant, and Vanceburg, KY (Component Plant); February 27, 1996.*

*TA–W–33,308 & A; Nine West Group, Madison, IN & Crothersville, IN; February 27, 1996.*

*TA–W–33,307 & A; Nine West Group, Cincinnati, OH & Harrison, OH; February 27, 1996.*

*TA–W–33,172; National Apparel, Boyertown, PA; January 20, 1996.*

*TA–W–33,355; International Wire Harness Group Div., Manning, IA (Formerly Wirekraft Industries, Burcliff Industries Div): March 11, 1996.*

*TA–W–33,268; International Wire Corp. (Formerly Wirekraft Industries, Burcliff Industries Div), Bucyrus, OH: February 26, 1996.*

*TA–W–33,328 & A; Stride Rite Corp., Hamilton, MO. & Tipton, MO; February 24, 1996.*

*TA–W–33,247; Rockwell Automaton/ Allen Bradley Co., Mauston,WI; February 8, 1996.*

*TA–W–33,076; Highlander Golf, a Div. of Sun Mountain Sports, Inc. Kalissell, MT; December 10, 1995.*

*TA–W–33,152; Sanyo Audio Manufacturing (USA) Corp., Milroy, PA: January 17, 1996.*

*TA–W–33,161; Pirelli Armstrong Tire Corp., Madison, TN; January 24, 1996.*

*TA–W–33,217 & TA–W–33, 218; The Leslie Fay Co., Inc., Dress Div Which Includes Andy Fashions, Pittston, Luzerne County PA and the Laflin, Laflin, PA, 530 Seventh Ave., New York, NY and 1412 Broadway, New York, NY; February 14, 1997.*

*TA–W–33,118; Adcor-Nicklos Drilling Co., Williston, ND; January 27, 1996.*

*TA–W–33,132; Snap-Tite, Inc., Quick Disonnect Div., Union City, PA; January 9, 1996.*

*TA–W–33,108; Belden Wire & Cable Cord Products Div., Apple Creek, OH; January 9, 1996.*

*TA–W–33,339; M & R Coats, Hoboken, NJ: March 13, 1996 Attleboro.*

*TA–W–33,265; Beacon Shoe Co., Inc., Jonesburg, MO; February 27, 1996.*

*TA–W–33,400; Krupp Gerlach Co., Lynch Road-Forging Div., Danville, IL; January 27, 1997.*

*TA–W–33,240; Garment Graphics, Inc., Coon Radids, MN: February 10, 1996.*

*TA–W–33,124; Kaufman Footwear Corp., Batavia, NY: December 19, 1995.*

*TA–W–33,239; Sun Mountain Sports, Dewing Department, Missoula, MT: February 12, 1996.*

*TA–W–33,284; S. Schwab Co., Inc., Cumberland, MD: February 20, 1996.*

*TA–W–33,099; Chase Packaging Corp., Portland, OR: January 3, 1996.*

*TA–W–33,166; Sanken USA, Mukilteo, WA: January 10, 1996.*

*TA–W–33,363; Spornell Fashions, Garfield, NJ: April 7, 1997.*

*TA–W–33,301; Gillsville Manufacturing Co., Inc., Gillsville, GA: January 27, 1996.*

*TA–W–33,175; Medite Corp., Lumber Div., White City, OR: January 24, 1996.*

*TA–W–33,123 & A; Roadmaster Corp., Olney, IL and Delavan, WI; January 7, 1996.*

Also, pursuant to Title V of the North American Free Trade Agreement Implementation Act (P.L. 103–182) concerning transitional adjustment assistance hereinafter called (NAFTA–TAA) and in accordance with Section 250(a) Subchapter D, Chapter 2, Title II, of the Trade Act as amended, the Department of Labor presents summaries of determinations regarding eligibility to apply for NAFTA–TAA issued during the month of March, 1997.

In order for an affirmative determination to be made and a certification of eligibility to apply for NAFTA–TAA the following group eligibility requirements of Section 250 of the Trade Act must be met:

(1) That a significant number or proportion of the workers in the workers' firm, or an appropriate subdivision thereof, (including workers in any agricultural firm or appropriate subdivision thereof) have become totally or partially separated from employment and either—

(2) That sales or production, or both, of such firm or subdivision have decreased absolutely,

(3) that imports from Mexico or Canada of articles like or directly competitive with articles produced by such firm or subdivision have increased, and that the increases in imports contributed importantly to such workers' separations or threat of separation and to the decline in sales or production of such firm or subdivision; or

(4) That there has been a shift in production by such workers' firm or subdivision to Mexico or Canada of articles like or directly competitive with articles which are produced by the firm or subdivision.

**Negative Determinations NAFTA–TAA**

In each of the following cases the investigation revealed that criteria (3) and (4) were not met. Imports from Canada or Mexico did not contribute importantly to workers' separations. There was no shift in production from the subject firm to Canada or Mexico during the relevant period.

*NAFTA–TAA–01487; The Earthgrains Co., Indianapolis, IN*

*NAFTA–TAA–01548; Inland Paperboard and Packaging, Inc., Erie, PA*

*NAFTA–TAA–01516 & A; Niagara Hohawk Power Corp., Headquartered in Syracuse, NY and Throughout The State of New York*

*NAFTA–TAA–01513; Posey Manufacturing Co., Hoquiam, WA*

*NAFTA–TAA–01452; Krupp Gerlach Co., Lynch Road—Forging Div., Danville, IL*

*NAFTA–TAA–01547; Unifour Finishers, Hickory, NC*

*NAFTA–TAA–01591; AM General Corp., Indianapolis Stamping Plant, Indianapolis, IN*

*NAFTA–TAA–01550; Allied Signal, Inc., Greenville, OH*

*NAFTA–TAA–01449; Indeck Energy Services of Turners Falls, Turners Falls, MA*

*NAFTA–TAA–01425; Badger Northland, Inc., Kaukauna, WI*

*NAFTA–TAA–01460; ABB Air Preheater, Inc., ABB Raymond Div., Enterprise, KS*

In the following cases, the investigation revealed that the criteria for eligibility have not been met for the reasons specified.

*NAFTA–TAA–01521; Merchants Fast Motor Lines, Inc., Merchants of Texas, Inc., Abilene, TX*

*NAFTA–TAA–01597; Texas LPG Storage Co., Inc., El Paso, TX*

*NAFTA–TAA–01392; System One Amadeus, Miami, FL*

*NAFTA–TAA–01538; Schwerman Trucking Co., El Paso, TX*
*NAFTA–TAA–01517; Cabano Kingsway Transport, Kingsway Transport of America, Buffalo, NY*

The investigation revealed that the workers of the subject firm did not produce an article within the meaning of Section 250(a) of the Trade Act, as amended.

**Affirmative Determinations NAFTA–TAA**

The following certifications have been issued; the date following the company name & location for each determination references the impact date for all workers for such determination.

*NAFTA–TAA–01540; Beacon Shoes Company, Inc., Jonesburg, MO: February 26, 1996.*
*NAFTA–TAA–01528; American West Trading Co., Dresden, TN: February 25, 1996.*
*NAFTA–TAA–01525; Burlington Industries, Inc., Knitting Fabric Div/ Denton Plant, Denton, NC: February 25, 1996.*
*NAFTA–TAA–01478; Activewear Co., Inc., Athens, GA: October 31, 1995.*
*NAFTA–TAA–01447; Landis & GYR Utilities Services, Inc., Metering Div., Lafayette, IN: January 28, 1996.*
*NAFTA–TAA–01563; Hartford Eichenauer, Inc., Newport, NH: March 14, 1996.*
*NAFTA–TAA–01556; Ranco North American, A.K.A. Siebe, Inc., Quality Control Department, Brownsville, TX: March 7, 1996.*
*NAFTA–TAA–01539; Moresource Magnetic Collectibles, Fredericktown, MO: March 6, 1996.*
*NAFTA–TAA–01529; Meyers & Son Mfg Co., Inc., Madison, IN: February 19, 1996.*
*NAFTA–TAA–01542; Fresenius Medical Care, Ogden, UT: February 28, 1996.*
*NAFTA–TAA–01523; Gillesville Manufacturing Company, Inc., Gillesville, GA: January 27, 1996.*
*NAFTA–TAA–01534; SPX Corp., Contech Div., Dowagiac, MI: February 26, 1996.*
*NAFTA–TAA–01444; Commemorative Brands, Inc., L.G. Balfour Co., North Attleboro, MA: January 22, 1996.*
*NAFTA–TAA–01508; Beldon Wire & Cable Co., Apple Creek, OH: February 19, 1996.*

I hereby certify that the aforementioned determinations were issued during the month of April, 1997. Copies of these determinations are available for inspection in Room C–4318, U.S. Department of Labor, 200 Constitution Avenue, NW., Washington, DC 20210 during normal business hours or will be mailed to persons who write to the above address.

Dated: April 18, 1997.

**Russell T. Kile,**

*Program Manager, Policy & Reemployment Services, Office of Trade Adjustment Assistance.*

[FR Doc. 97–11466 Filed 5–1–97; 8:45 am]

BILLING CODE 4510–30–M

---

## DEPARTMENT OF LABOR

### Employment and Training Administration

**[TA–W–32,962 and NAFTA–01337]**

### Rayonier, Incorporated (Port Angeles Mill) Port Angeles, Washington; Notice of Negative Determination on Reconsideration

On February 4, 1997, the Department issued an Affirmative Determination Regarding Application for Reconsideration for the workers and former workers of the subject firm. The petitioner presented evidence that the Department's investigations were incomplete. The notice was published in the **Federal Register** on February 13, 1997 (62 FR 6806).

The Department initially denied worker adjustment assistance to the Rayonier, Incorporated worker group because the ''contributed importantly'' group eligibility requirement of Section 222(3) of the Trade Act of 1974, as amended, was not met. The ''contributed importantly'' test is generally demonstrated through a survey of the workers' firm's customers. The investigation revealed that none of the customers reported increasing imports of pulps for chemical, paper and speciality end uses in the relevant period would decreasing purchases from Rayonier, Incorporated, Port Angeles Mill.

The Department initially denied NAFTA–TAA for the workers of Rayonier, Incorporated, Port Angeles, Washington, because criteria (3) and (4) of paragraph (a)(1) of Section 250 of the Trade Act were not met. Rayonier did not import pulps for chemical, paper and specialty end uses from Canada or Mexico, nor was there a shift of production from Port Angeles to Canada or Mexico. The customers of Rayonier did not increase imports of specialty pulps from Mexico or Canada while reducing their purchases from the subject firm.

The petitioner alleges that the wood usage per ton of product is significantly higher compared to higher yield process/products such as for paper pulps. The high wood usage per ton of product combined with very high average wood costs in the Pacific Northwest compared to other parts of the world contributed to not being able to compete against lower cost foreign suppliers. Further, the low cost competitive pulps available from foreign sources have also adversely influenced the pricing of higher value pulps produced by the Port Angeles mill. Additionally, foreign competitors are located in areas of low cost and plentiful wood supply and they also benefit from lower labor costs. In order to determine worker group eligibility, the Department must examine the impact of imports of products like or directly competitive with those articles produced at the Port Angeles mill. Pricing and/or the cost of raw material is not a criterion for worker certification.

On reconsideration, the Department reexamined the customer survey conducted for Rayonier's declining customers. The original survey revealed that none of the customers reported increasing their purchases of pulps for specialty end uses while decreasing their purchases from Rayonier. Findings on reconsideration show that one customer, Rayonier requested we contact, reporting reduced purchases from Rayonier no longer produced the product for which the pulp was used.

The petitioner explained that some of the main customers of the Port Angeles mill have qualified alternate dissolving pulps including pulps from Rayonier's other domestic facilities. Product purchases by the subject firms' customers from other domestic suppliers is not a basis for worker certification.

Other findings on reconsideration showed that the majority of the specialty pulp produced at the Port Angeles mill was for the export market, and thus is not affected by imports.

The petitioner provided contact names and telephone numbers of industry experts so that the Department could examine the factors affecting the pulp and paper industry. During the course of an investigation to determine worker group eligibility, the Department does not conduct an industry study, but limits its investigation to the impact of imports like or directly competitive with the products produced and sold by the workers' firm.

**Conclusion**

After reconsideration, I affirm the original notice of negative determination of eligibility to apply for adjustment assistance and NAFTA–TAA

for workers and former workers of Rayonier, Incorporated, Port Angeles, Washington.

Signed at Washington, D.C., this 21st day of April 1997.

**Russell T. Kile,**

*Program Manager, Policy and Reemployment Services, Office of Trade Adjustment Assistance.*

[FR Doc. 97–11465 Filed 5–1–97; 8:45 am]

BILLING CODE 4510–30–M

## DEPARTMENT OF LABOR

### Employment and Training Administration

**[TA–W–33,387]**

### Anchor Glass Container Connellsville, Pennsylvania; Notice of Termination of Investigation

Pursuant to Section 221 of the Trade Act of 1974, an investigation was initiated on April 7, 1997 in response to a worker petition which was filed on behalf of workers at Anchor Glass Container, Connellsville, Pennsylvania.

All workers of the subject firm are covered under an existing certification (TA–W–33,299). Consequently, further investigation in this case would serve no purpose; and the investigation has been terminated.

Signed at Washington, DC, this 22nd day of April, 1997.

**Russell T. Kile,**

*Program Manager, Policy and Reemployment Services, Office of Trade Adjustment Assistance.*

[FR Doc. 97–11464 Filed 5–1–97; 8:45 am]

BILLING CODE 4510–30–M

## DEPARTMENT OF LABOR

### Employment and Training Administration

**[NAFTA—01558]**

### The Flexible Corporation, Delaware, Ohio; Notice of Termination of Investigation

Pursuant to Title V of the North American Free Trade Agreement Implementation Act (P.L. 103–182) concerning transitional adjustment assistance, hereinafter called (NAFTA–TAA), and in accordance with Section 250(a), Subchapter D, Chapter 2, Title II, of the Trade Act of 1974, as amended (19 U.S.C. 2273), an investigation was initiated on March 11, 1997 in response to a petition filed on behalf of workers at The Flexible Corporation, Delaware, Ohio.

This case is being terminated because the workers were separated from the subject firm more than one year prior to the date of the petition. The NAFTA Implementation Act specifies that no certification may apply to any worker whose last separation occurred more than one year before the date of the petition. Consequently further investigation in this case would serve no purpose, and the investigation has been terminated.

Signed at Washington, DC, this 21st day of April 1997.

**Russell T. Kile,**

*Program Manager Policy and Reemployment Services, Office of Trade Adjustment Assistance.*

[FR Doc. 97–11467 Filed 5–1–97; 8:45 am]

BILLING CODE 4510–30–M

## DEPARTMENT OF LABOR

### Bureau of Labor Statistics

### Proposed Collection; Comment Request

**ACTION:** Notice.

**SUMMARY:** The Department of Labor, as part of its continuing effort to reduce paperwork and respondent burden, conducts a pre-clearance consultation program to provide the general public and Federal agencies with an opportunity to comment on proposed and/or continuing collections of information in accordance with the Paperwork Reduction Act of 1995 (PRA95) [44 U.S.C. 3506(c)(2)(A)]. This program helps to ensure that requested data can be provided in the desired format, reporting burden (time and financial resources) is minimized, collection instruments are clearly understood, and the impact of collection requirements on respondents can be properly assessed. Currently, the Bureau of Labor Statistics (BLS) is soliciting comments concerning the proposed revision of the ''National Longitudinal Survey of Youth 1979 (NLSY79).'' A copy of the proposed information collection request (ICR) can be obtained by contacting the individual listed below in the addressee section of this notice.

**DATES:** Written comments must be submitted to the office listed in the addressee section below on or before July 1, 1997.

The Bureau of Labor Statistics is particularly interested in comments which:

- Evaluate whether the proposed collection of information is necessary for the proper performance of the functions of the agency, including whether the information will have practical utility;
- Evaluate the accuracy of the agency's estimate of the burden of the proposed collection of information, including the validity of the methodology and assumptions used;
- Enhance the quality, utility, and clarity of the information to be collected; and
- Minimize the burden of the collection of information on those who are to respond, including through the use of appropriate automated, electronic, mechanical, or other technological collection techniques or other forms of information technology, e.g., permitting electronic submissions of responses.

**ADDRESSES:** Send comments to Karin G. Kurz, BLS Clearance Officer, Division of Management Systems, Bureau of Labor Statistics, Room 3255, 2 Massachusetts Avenue, NE., Washington, DC 20212. Ms. Kurz can be reached on 202–606–7628 (this is not a toll free number).

**SUPPLEMENTARY INFORMATION:**

### I. Background

The National Longitudinal Survey of Youth79 (NLSY79) has been conducted since 1979. It consists of a nationally representative sample of individuals who were age 14 to 21 in 1979. The cohort members were interviewed annually from 1979 to 1994. After the 1994 interview, the survey was moved to a biennial cycle.

The data collected by the NLSY79 will contribute to the knowledge about labor market processes involved in transitions between jobs, job searches, and hierarchies within jobs. Survey data will contribute to the knowledge about individuals' ability to succeed in the job market and how levels of success relate to educational attainment, vocational training, prior occupational experiences, and general and job-specific experiences.

The NLSY79 research contributes to the formation of national policy in the areas of education, training and employment programs, and unemployment compensation. In addition, members of the academic community publish articles and reports based on these NLSY79 data for the Department of Labor (DOL) and other funding agencies. The DOL uses the changes measured in the labor market to design programs that would ease employment and unemployment problems. The survey design provides data gathered over time to form the only data set that contains this information. Without the collection of these data, an

accurate longitudinal data set could not be provided to researchers and policy-makers, and the DOL could not perform its policy- and report-making activities, as described above.

**II. Current Actions**

The 1998 NLSY79 will document work experience, labor force attachment, participation in educational or training programs, financial situations, health status and health benefits. It will continue to gather detailed work history information along with information about family background and ongoing demographic events.

*Type of Review:* Revision.

*Agency:* Bureau of Labor Statistics.

*Title:* National Longitudinal Survey of Youth79.

*OMB Number:* 1220–0109.

*Affected Public:* Individuals or households.

*Total Respondents:* 8,650.

*Frequency:* Biennially.

*Total Responses:* 8,650.

*Average Time Per Response:* 100.7 Minutes.

*Estimated Total Burden Hours:* 14,512 Hours.

*Total Burden Cost (capital/startup):* $0.

*Total Burden Cost (operating/maintenance):* $0.

Comments submitted in response to this notice will be summarized and/or included in the request for Office of Management and Budget approval of the information collection request; they also will become a matter of public record.

Signed at Washington, D.C., this 28th day of April, 1997.

**W. Stuart Rust, Jr.,**

*Acting Chief, Division of Management Systems, Bureau of Labor Statistics.*

[FR Doc. 97–11469 Filed 5–1–97; 8:45 am]

BILLING CODE 4510–24–M

## LEGAL SERVICES CORPORATION

### Sunshine Act Meeting; Board of Directors Finance Committee

**TIME AND DATE:** The Finance Committee of the Legal Services Corporation's Board of Directors will meet on May 9, 1997. The meeting will begin at 10:00 a.m. and continue until conclusion of the committee's agenda.

**LOCATION:** Legal Services Corporation, 750 First Street, N.E.—10th Floor Conference Room, Washington, D.C. 20002.

**STATUS OF MEETING:** Open.

**MATTERS TO BE CONSIDERED:**

1. Approval of agenda.
2. Approval of minutes of the March 7, 1997, committee meeting.
3. Review of the Corporation's FY '97 budget and expenses through March 31, 1997.
4. Review of projected expenses for the remainder of FY '97 and act on:
   a. Internal budgetary adjustments;
   b. COB reallocation.
5. Staff report on the Corporation's office space planning.
6. Consider and act on other business.
7. Public Comment.

**CONTACT PERSON FOR INFORMATION:** Victor M. Fortuno, General Counsel and Secretary of the Corporation, at (202) 336–8810.

**SPECIAL NEEDS:** Upon request, meeting notices will be made available in alternate formats to accommodate visual and hearing impairments. Individuals who have a disability and need an accommodation to attend the meeting may notify Barbara Asante, at (202) 336–8800.

Dated: April 30, 1997.

**Victor M. Fortuno,**

*General Counsel.*

[FR Doc. 97–11664 Filed 4–30–97; 2:04 pm]

BILLING CODE 7050–01–P

## LEGAL SERVICES CORPORATION

### Sunshine Act Meeting; Board of Directors Operations and Regulations Committee

**TIME AND DATES:** The Operations and Regulations Committee of the Legal Services Corporation Board of Directors will meet on May 9, 1997. The meeting will begin at 10:00 a.m. and continue until the committee concludes its agenda.

**LOCATION:** Legal Services Corporation, 750 First Street, N.E.,—11th Flr. Boardroom, Washington, D.C. 20002.

**STATUS OF MEETING:** Open, except that a portion of the meeting may be closed pursuant to a unanimous vote of the Board of Directors to hold an executive session of the Committee. At the executive session, legal counsel will report to the Committee on litigation involving the Corporation. The closing is authorized by the relevant provisions of the Government in the Sunshine Act [5 U.S.C. 552b(c)(10)] and the corresponding regulation of the Legal Services Corporation [45 CFR § 1622.5(h)]. A copy of the General Counsel's Certification that the closing is authorized by law will be posted for public inspection in the Corporation's main reception area, on the 10th floor of 750 First Street N.E., Washington, D.C.

**MATTERS TO BE CONSIDERED:**

*Open Session*

1. Approval of agenda.
2. Approval of minutes of the March 7, 1997, committee meeting.
3. Approval of minutes of the committee's March 7, 1997, executive session.

*Closed Session*

4. Report from legal counsel on litigation involving the Corporation.

*Open Session*

5. Consider and act on final revisions to 45 CFR Part 1610, the Corporation's regulation governing the use of non-LSC funds.
6. Consider and act on final revisions to 45 CFR Part 1639, the Corporation's regulation proscribing involvement in welfare reform.
7. Consider and act on a draft personnel rule to be codified at 45 CFR Part 1601.
8. Consider and act on proposed revisions to 45 CFR Part 1630, the Corporation's regulation governing cost standards and procedures.
9. Consider and act on other business.

**CONTACT PERSON FOR INFORMATION:** Victor M. Fortuno, General Counsel and Secretary of the Corporation, at (202) 336–8810.

**SPECIAL NEEDS:** Upon request, meeting notices will be made available in alternate formats to accommodate visual and hearing impairments. Individuals who have a disability and need an accommodation to attend the meeting may notify Barbara Asante at (202) 336–8892.

Dated: April 30, 1997.

**Victor M. Fortuno,**

*General Counsel.*

[FR Doc. 97–11665 Filed 4–30–97; 2:04 pm]

BILLING CODE 7050–01–P

## LEGAL SERVICES CORPORATION

### Sunshine Act Meeting; Board of Directors Committee on Provision for the Delivery of Legal Services

**TIME AND DATES:** The Provision for the Delivery of Legal Services Committee of the Legal Services Corporation's Board of Directors will meet on May 9, 1997. The meeting will begin at 2:00 p.m. and continue until conclusion of the committee's agenda.

**LOCATION:** Legal Services Corporation, 750 First Street, N.E.—10th Floor Conference Room, Washington, D.C.

**STATUS OF MEETING:** Open.

**MATTERS TO BE CONSIDERED:**

1. Approval of agenda.
2. Approval of minutes of the March 7, 1997, committee meeting.
3. Report by the Corporation's Inspector General on the status of implementation of § 509 of Pub. L. 104–134.
4. Staff report on activities of the Office of Program Operations.
5. Consider and act on other business.

**CONTACT PERSON FOR INFORMATION:** Victor M. Fortuno, General Counsel and Secretary of the Corporation, at (202) 336–8810.

**SPECIAL NEEDS:** Upon request, meeting notices will be made available in alternate formats to accommodate visual and hearing impairments. Individuals who have a disability and need an accommodation to attend the meeting may notify Barbara Asante, at (202) 336–8800.

Dated: April 30, 1997.

**Victor M. Fortuno,**

*General Counsel.*

[FR Doc. 97–11666 Filed 4–30–97; 2:04 pm]

BILLING CODE 7050–01–P

## LEGAL SERVICES CORPORATION

### Sunshine Act Meeting Corporation's Board of Directors

**TIME AND DATE:** The Board of Directors of the Legal Services Corporation will meet on May 10, 1997. The meeting will begin at 9:00 a.m. and continue until conclusion of the Board's agenda.

**LOCATION:** Legal Services Corporation, 750 First Street, N.E.—11th Floor Boardroom, Washington, DC.

**STATUS OF MEETING:** Open, except that a portion of the meeting may be closed pursuant to a unanimous vote of the Board of Directors to hold an executive session. At the executive session, the Corporation's General Counsel will report to the Board on litigation to which the Corporation is or may become a party, and the Board may act on the matters reported. The closing is authorized by the relevant provisions of the Government in the Sunshine Act [5 U.S.C. 552b(c)(10)] and the corresponding regulation of the Legal Services Corporation [45 CFR § 1622.5(h)]. A copy of the General Counsel's Certification that the closing is authorized by law will be posted for public inspection in the Corporation's main reception area, on the 10th floor of 750 First Street N.E., Washington, D.C., and will also be available upon request.

**MATTERS TO BE CONSIDERED:**

*Open Session*

1. Approval of agenda.
2. Approval of minutes of the March 8, 1997, Board meeting.
3. Approval of minutes of the March 23, 1997, Board meeting.
4. Approval of minutes of the Board's executive session of March 23, 1997.
5. Chairman's and Members' Reports.
6. President's Report.
7. Inspector General's Report.
8. Consider and act on the report of the Board's Finance Committee.
9. Consider and act on the report of the Board's Operations and Regulations Committee:
   a. Consider and act on final revisions to 45 CFR Part 1610, the Corporation's regulation governing the use of non-LSC funds.
   b. Consider and act on final revisions to 45 CFR Part 1639, the Corporation's regulation proscribing involvement in welfare reform.
   c. Consider and act on a draft personnel rule to be codified at 45 CFR Part 1601.
   d. Consider and act on proposed revisions to 45 CFR Part 1630, the Corporation's regulation governing cost standards and procedures.
10. Consider and act on the report of the Board's Provision for the Delivery of Legal Services Committee.
11. Consider and act on proposed policies and procedures for annual performance reviews of the Corporation's President and Inspector General, and procedures to govern employee grievances filed against either the Inspector General or the President.
12. Consider and act on proposed Report of the Board of Directors to accompany the Inspector General's Semi-annual Report to the Congress for the period of October 1, 1996–March 31, 1997.

*Closed Session*

13. Briefing[1] by the Inspector General on the activities of the OIG, including but not limited to a status report on the OIG's special audits.
14. Consider and act on the General Counsel's report on potential and pending litigation involving the Corporation.

*Open Session*

15. Consider and act on making available to the incoming President of the Corporation copies of selected executive session transcripts, or excerpts thereof, for the purpose of providing him with background on specific issues relating to the Corporation and its operations.
16. Consider and act on scheduling of board and committee meetings for the period from July through December 1997.
17. Public comment.
18. Consider and act on other business.

**CONTACT PERSON FOR INFORMATION:** Victor M. Fortuno, General Counsel and Secretary of the Corporation, at (202) 336–8810.

**SPECIAL NEEDS:** Upon request, meeting notices will be made available in alternate formats to accommodate visual and hearing impairments. Individuals who have a disability and need an accommodation to attend the meeting may notify Barbara Asante, at (202) 336–8800.

Dated: April 30, 1997.

**Victor M. Fortuno,**

*General Counsel.*

[FR Doc. 97–11667 Filed 4–30–97; 2:04 pm]

BILLING CODE 7050–01–P

[1] Any portion of the closed session consisting solely of staff briefings does not fall within the Sunshine Act's definition of the term ''meeting'' and, therefore, the requirements of the Sunshine Act do not apply to any such portion of the closed session. 5 U.S.C. 552(b) (a)(2) and (b). See also 45 CFR § 1622.2 & 1622.3.

## NATIONAL AERONAUTICS AND SPACE ADMINISTRATION

**[Notice 97–054]**

### Notice of Agency Report Forms Under OMB Review

**AGENCY:** National Aeronautics and Space Administration (NASA).

**ACTION:** Notice of agency report forms under OMB review.

**SUMMARY:** The National Aeronautics and Space Administration, as part of its continuing effort to reduce paperwork and respondent burden, invites the general public and other Federal agencies to take this opportunity to comment on proposed and/or continuing information collections, as required by the Paperwork Reduction Act of 1995 (Pub. L. 104–13, 44 U.S.C. 3506(c)(2)(A)). The reports will be utilized by the Inventions and Contributions Board to evaluate the progress of development and commercialization for waived inventions.

**DATES:** All comments should be submitted within 60 calendar days from the date of this publication.

**ADDRESSES:** All comments should be addressed to Mr. Robert J. Bobek, Code ICB National Aeronautics and Space Administration, Washington, DC 20546–6001.

**FOR FURTHER INFORMATION CONTACT:** Ms. Carmela Simonson, NASA Reports Officer, (202) 358–1223.

*Title:* Patent Waiver Report.

*OMB Number:* 2700–0050.

*Type of review:* Extension.

*Need and Uses:* Reports are analyzed by the NASA Inventions and Contributions Board to evaluate the progress made by NASA contractors who received waiver of patent rights in terms of development and commercialization of waived inventions.

*Affected Public:* Business or other for-profit.

*Number of Respondents:* 66.

*Responses Per Respondent:* 1.

*Annual Responses:* 66.

*Hours Per Request:* 2.

*Annual Burden Hours:* 147.

*Frequency of Report:* Annually.

**Donald J. Andreotta,**

*Deputy Chief Information Officer (Operations), Office of the Administrator.*

[FR Doc. 97–11473 Filed 5–1–97; 8:45 am]

BILLING CODE 7510–01–M

## NATIONAL SCIENCE FOUNDATION

### Special Emphasis Panel in Advanced Scientific Computing; Notice of Meeting

In accordance with the Federal Advisory Committee Act (Pub. L. 92–463, as amended), the National Science Foundation announces the following meeting:

*Name:* Special Emphasis Panel in Advanced Scientific Computing (#1185).

*Date and Time:* May 19, 1997, 8:30 a.m. to 5 p.m.

*Place:* National Science Foundation, 4201 Wilson Boulevard, Suite 1120, Arlington, VA 22230.

*Type of Meeting:* Closed.

*Contact Person:* Dr. John Van Rosendale, Program Director, New Technologies Program, Suite 1122, National Science Foundation, 4201 Wilson Boulevard, Arlington, VA 22230, (703) 306–1962.

*Purpose of Meeting:* To provide recommendations and advice concerning proposals submitted to NSF for financial support.

*Agenda:* Panel review of the New Technologies Program proposals as part of the selection process for awards.

*Reason for Closing:* The proposals being reviewed include information of a proprietary or confidential nature, including technical information; financial data, such as salaries; and personal information concerning individuals associated with the proposals. These matters are exempt under 5 U.S.C. 552b(c), (4) and (6) of the Government in the Sunshine Act.

Dated: April 28, 1997.

**M. Rebecca Winkler,**

*Committee Management Officer.*

[FR Doc. 97–11386 Filed 5–1–97; 8:45 am]

BILLING CODE 7555–01–M

## NATIONAL SCIENCE FOUNDATION

### Advisory Committee for Biological Sciences: Meeting

In accordance with the Federal Advisory Committee Act (Pub. L. 92–463, as amended), the National Science Foundation announces the following meeting.

*Name:* Advisory Committee for Biological Sciences; (1110).

*Date and Time:* May 21–23, 1997.

*Place:* Room 630, National Science Foundation, 4201 Wilson Boulevard, Arlington, VA 22230.

*Type of Meeting:* Closed.

*Contact Person:* Dr. Scott Collins, Division of Environmental Biology, Room 635, National Science Foundation, 4201 Wilson Boulevard, Arlington, VA 22230. Telephone: (703) 306–1480.

*Purpose of Meeting:* To carry out Committee of Visitors (COV) review, including examination of decisions on proposals, reviewer comments, and other privileged materials.

*Agenda:* To provide oversight review of the Long Term Projects in Environmental Biology Cluster.

*Reason for Closing:* The meeting is closed to the public because the Committee is reviewing proposal actions that will include privileged intellectual property and personal information that could harm individuals if they are disclosed. If discussions were open to the public, these matters that are exempt under 5 U.S.C. 552b(c), (4) and (6) of the Government in the Sunshine Act would be improperly disclosed.

Dated: April 28, 1997.

**M. Rebecca Winkler,**

*Committee Management Officer.*

[FR Doc. 97–11391 Filed 5–1–97; 8:45 am]

BILLING CODE 7555–01–M

## NATIONAL SCIENCE FOUNDATION

### Special Emphasis Panel in Electrical Communication Systems; Notice of Meeting

This notice is being published in accord with the Federal Advisory Committee Act (Pub.L 92–463, as amended). On May 14, 1997, the Special Emphasis Panel in Electrical Communication Systems (1996) will be holding panel meetings to review and evaluate research proposals. Specifics are:

*Time:* 8:30 to 5 pm.

*Place:* Room 530, National Science Foundation, 4201 Wilson Blvd., Arlington, Va.

*Type of Meeting:* Closed.

*Contact Person:* Dr. Rajinder Khosla and Dr. Paul Werbos, Program Officer, ECS, Room 675, National Science Foundation, 4201 Wilson Blvd., Arlington, Va, 22230, telephone (703) 306–1340.

*Purpose of Meeting:* To provide advice and recommendations concerning proposals submitted to NSF for financial support.

*Agenda:* To review and evaluate proposals submitted to the Major Research Instrumentation (MRI) Program as part of the selection process for awards.

*Reason for Closing:* The proposals being reviewed include information of a proprietary or confidential nature, including technical information; financial data, such as salaries, and personal information concerning individuals associated with the proposals. These matters are exempt under 5 USC 552b(c) (4) and (6) of the Government in the Sunshine Act.

Dated: April 28, 1997.

**M. Rebecca Winkler,**

*Committee Management Officer.*

[FR Doc. 97–11385 Filed 5–1–97; 8:45 am]

BILLING CODE 7555–01–M

## NATIONAL SCIENCE FOUNDATION

### Advisory Panel for Genetics; Notice of Meeting

In accordance with the Federal Advisory Committee Act (Pub. L. 92–463, as amended), the National Science Foundation announces the following meeting.

*Name:* Advisory Panel for Genetics (1149) Panel B.

*Date and Time:* May 19–21, 1997, 8:30 am to 5 pm.

*Place:* Room 310, National Science Foundation, 4201 Wilson Boulevard, Arlington, VA 22230.

*Type of Meeting:* Closed.

*Contact Person:* Dr. DeLill Nasser, Program Director for Eukaryotic Genetics, Division of Molecular and Cellular Biosciences, Room 655, National Science Foundation, 4201 Wilson Boulevard, Arlington, VA 22230. Telephone: (703) 306–1439.

*Purpose of Meeting:* To provide advice and recommendations concerning proposals submitted to NSF for financial support.

*Agenda:* To review and evaluate proposals submitted to the Eukaryotic Genetics Program as part of the selection process for awards.

*Reason for Closing:* The proposals being reviewed include information of a proprietary or confidential nature, including technical information; financial data, such as salaries and personal information concerning individuals associated with the proposals. These matters are exempt under 5 U.S.C. 552b(c), (4) and (6) of the Government in the Sunshine Act.

Dated: April 28, 1997.

**M. Rebecca Winkler,**

*Committee Management Officer.*

[FR Doc. 97–11387 Filed 5–1–97; 8:45 am]

BILLING CODE 7555–01–M

## NATIONAL SCIENCE FOUNDATION

### Advisory Committee for Geosciences; Notice of Meeting

In accordance with the Federal Advisory Committee Act (Pub. L. 92–463, as amended), the National Science Foundation announces the following meeting:

*Name*: Advisory Committee for Geosciences (1755).

*Dates*: May 21–22, 1997.

*Time*: 8:30 a.m.–5 p.m..

*Place*: Room 375, National Science Foundation, 4201 Wilson Boulevard, Arlington, Virginia 22230.

*Type of Meeting*: Open.

*Contact Person*: Dr. Thomas J. Baerwald, Deputy Assistant Director for Geosciences, Suite 705, National Science Foundation, 4201 Wilson Boulevard, Arlington, Virginia 22230, 703–306–1502.

*Minutes*: May be obtained from the contact person listed above.

*Purpose of Meeting*: To provide advice, recommendations and oversight concerning support for research, education, and human resources development in the geosciences.

*Agenda*: Report from GEO Town Meetings, NSB, NSF and GEO Updates, Stresses in the Geosciences, GPRA, GEO Committees of Visitors, Long-range Planning, GEO Education Planning, Diversity in the Geosciences.

**Note:** A detailed agenda will be posted on the NSF Homepage approximately one week prior to the meeting on http://www.geo.nsf.gov/adgeo/advcomm/start.htm.

Dated: April 28, 1997.

**M. Rebecca Winkler,**

*Committee Management Officer.*

[FR Doc. 97–11390 Filed 5–1–97; 8:45 am]

BILLING CODE 7555–01–M

## NATIONAL SCIENCE FOUNDATION

### Special Emphasis Panel in Geosciences; Notice of Meeting

In accordance with the Federal Advisory Committee Act (Pub. L. 92–463, as amended), the National Science Foundation announces the following meeting.

*Name:* Special Emphasis Panel in Geosciences (1756).

*Date & time:* Monday, May 19–Wednesday, May 21, 1997; 8:30 am–5 pm.

*Place:* Room 730, National Science Foundation, 4201 Wilson Blvd., Arlington, VA 22230.

*Type of Meeting:* Closed.

*Contact Person:* Dr. Michael R. Reeve, Section Head, National Science Foundation, 4201 Wilson Blvd., Arlington, VA 22230. Telephone: (703) 306–1582.

*Purpose of Meeting:* To provide advice and recommendations concerning proposals submitted to the Joint NSF/NOAA Coastal Ocean Processes (CoOP): Coastal Studies in the Great Lakes for financial support.

*Agenda:* To review and evaluate proposals submitted to the NSF/NOAA announcement of opportunity (NSF 96–78) as part of the selection process for awards.

*Reason for Closing:* The proposals being reviewed include information of a proprietary or confidential nature, including technical information; financial data, such as salaries; and personal information concerning individuals associated with the proposals. These matters are exempt under 5 U.S.C. 552b (c), (4) and (6) of the Government in The Sunshine Act.

Dated: April 28, 1997.

**M. Rebecca Winkler,**

*Committee Management Officer.*

[FR Doc. 97–11388 Filed 5–1–97; 8:45 am]

BILLING CODE 7555–01–M

## NATIONAL SCIENCE FOUNDATION

### Special Emphasis Panel in Geosciences; Meeting

In accordance with the Federal Advisory Committee Act (Pub. L. 92–463, as amended), the National Science Foundation announces the following meeting:

*Name and Committee Code:* Special Emphasis Panel in Geosciences (1756).

*Date and Time:* May 23, 1997; 8:30 a.m. to 5:00 p.m.

*Place:* Room 770, National Science Foundation, 4201 Wilson Boulevard, Arlington, VA.

*Type of Meeting:* Closed.

*Contact Person:* Dr. Sunanda Basu (703) 306–1529, Program Director, Division of Atmospheric Sciences, Room 775, National Science Foundation, 4201 Wilson Boulevard, Arlington, VA 22230; and Dr. Richard Brandt (703) 696–4206, Office of Naval Research, Code 312, 800 North Quincy Street, Arlington, VA 22217–5660.

*Purpose of Meeting:* To provide advice and recommendations concerning proposals submitted to NSF and ONR for financial support.

*Agenda:* To review and evaluate Ionospheric Interactions Initiative (III) proposals as part of the selection process for awards.

*Reason For Closing:* The proposals being reviewed include information of a proprietary or confidential nature, including technical information; financial data, such as salaries; and personal information concerning individuals associated with the proposals. These matters are exempt under 5 USC 552b(c), (4) and (6) of the Government in the Sunshine Act.

Dated: April 28, 1997.

**M. Rebecca Winkler,**

*Committee Management Officer.*

[FR Doc. 97–11392 Filed 5–1–97; 8:45 am]

BILLING CODE 7555–01–M

## NATIONAL SCIENCE FOUNDATION

### Special Emphasis Panel in Materials Research; Notice of Meeting

In accordance with the Federal Advisory Committee Act (Pub. L. 92–463 as amended), the National Science Foundation announces the following meetings:

*Name:* Special Emphasis Panel in Materials Research (DMR) (1203).

Dates, and Times: May 19, 1997, Room 375, 8 a.m.–5 p.m.; May 20, 1997, Room 375, 8 a.m. 5 p.m.; May 23, 1997, Rooms 310 and 360, 8 a.m.–5 p.m.

*Place:* National Science Foundation; 4201 Wilson Boulevard, Arlington, VA 22230.

*Type of Meetings:* Closed.

*Contact Person:* Dr. Carmen Huber, Program Director, Materials Research Science and Engineering Centers, Division of Materials Research, Room 1065, National Science Foundation, 4201 Wilson Blvd., Arlington, VA 22230. Telephone (703) 306–1996.

*Purpose of Meetings:* To provide advice and recommendations concerning proposals submitted to NSF for financial support by the Major Research Instrumentation Program.

*Agenda:* Review and evaluate proposals as part of the selection process for NSF support.

*Reason for Closing:* The proposals being reviewed may include information of a proprietary or confidential nature, including technical information, financial data such as salaries, and personal information concerning individuals associated with the proposals. These matters are exempt under U.S.C. 552b. (c) (4) and (6) of the Government in the Sunshine Act.

Dated: April 28, 1997.

[FR Doc. 97–11389 Filed 5–1–97; 8:45 am]

BILLING CODE 7555–01–M

## SECURITIES AND EXCHANGE COMMISSION

**[Release No. 35–26711]**

### Filings Under the Public Utility Holding Company Act of 1935, as Amended (''Act'')

April 25, 1997.

Notice is hereby given that the following filing(s) has/have been made with the Commission pursuant to provisions of the Act and rules promulgated thereunder. All interested persons are referred to the application(s) and/or declaration(s) for complete statements of the proposed transaction(s) summarized below. The

applications(s) and/or declaration(s) and any amendments thereto is/are available for public inspection through the Commission's Office of Public Reference.

Interested persons wishing to comment or request a hearing on the application(s) and/or declaration(s) should submit their views in writing by May 19, 1997, to the Secretary, Securities and Exchange Commission, Washington, D.C. 20549, and serve a copy on the relevant applicant(s) and/or declarant(s) at the address(es) specified below. Proof of service (by affidavit or, in case of an attorney at law, by certificate) should be filed with the request. Any request for hearing shall identify specifically the issues of fact or law that are disputed. A person who so requests will be notified of any hearing, if ordered, and will receive a copy of any notice or order issued in the matter. After said date, the application(s) and/or declaration(s), as filed or as amended, may be granted and/or permitted to become effective.

**Cinergy Corp., et al. (70–9015)**

Cinergy Corp., a registered holding company (''Cinergy''); Cinergy Investments, Inc., a nonutility subsidiary of Cinergy and itself a holding company (''Investments''); Cinergy Services, Inc., a nonutility subsidiary of Cinergy (''Services''); The Cincinnati Gas & Electric Company, a utility subsidiary of Cinergy and itself a holding company (''CG&E''); CG&E's utility subsidiaries, Lawrenceburg Gas Company (''Lawrenceburg''), The West Harrison Gas and Electric Company (''West Harrison''), The Union Light, Heat & Power Company (''Union'') and Miami Power Corporation (''Miami''); CG&E's nonutility subsidiaries, Tri-State Improvement Company (''Tri-State'') and KO Transmission Company (''KO''), all located at 139 East Fourth Street, Cincinnati Ohio 45202, and PSI Energy, Inc. (''PSI''), an electric utility subsidiary of Cinergy located at 1000 East Main Street, Plainfield, Indiana 46168, have filed an application-declaration under sections 6(a), 7, 9(a), 10 and 12(b) of the Act and rules 40, 43, 45, 52 and 54 thereunder.

By order dated August 25, 1995 (HCAR No. 26362) (''1995 Order''), the Commission authorized the following transactions through May 31, 1997: (a) PSI, Union, Lawrenceburg, West Harrison, and Miami (collectively, ''Utilities'') were authorized to incur short-term borrowings from banks and, in PSI's case, to issue and sell commercial paper; (b) Cinergy was authorized to issue guarantees and provide letters of credit in connection with short-term bank borrowings of its utility and nonutility subsidiaries; and (c) certain applicants were authorized to implement a money pool (''Money Pool'') to coordinate and provide for their short-term cash and working capital requirements.

The 1995 Order limited the aggregate principal amount of short-term borrowings at any one time outstanding (whether through the Money Pool or from banks or the sale of commercial paper) as follows: PSI, $400 million; Union, $35 million; Lawrenceburg, $3 million; West Harrison, $200,000; and Miami, $100,000. The 1995 Order also granted Cinergy authority to issue or obtain guarantees and letters or credit to or on behalf of its subsidiaries in amounts that, when aggregated with short term promissory notes and commercial paper issued by Cinergy, could not exceed $375 million. By order dated March 12, 1996 (HCAR No. 26215) (''1996 Order''), the limitation with respect to letters of credit, short term promissory notes and commercial paper issued or obtained by Cinergy was raised to $1 billion.

Applicants now propose through December 31, 2002: (a) For the Utilities to make loans to and incur borrowings from one another under the Money Pool, and (b) for Cinergy, CG&E, Cinergy Services, CG&E, Tri-State and KO to make loans to the Utilities under the Money Pool. The interest rate applicable to Money Pool loans of surplus treasury funds of Money Pool participants is the CD yield equivalent of the 30-day Federal Reserve ''AA'' Industrial Commercial Paper Composite Rate. This rate parallels the lenders' effective cost of capital with respect to such internal funds. The interest rate applicable to Money Pool loans of proceeds from bank borrowings by Money Pool participants or the sale of commercial paper by Cinergy, CG&E or PSI is the weighted average of the lending companies' cost for such funds. The interest rate applicable to Money Pool loans comprised of both types of funds is a blended rate equal to the weighted average cost of those funds. All Money Market loans would be repayable on demand and in any event not later than one year from the date of advance.

In addition, the Utilities propose to incur short-term bank borrowings from third parties and PSI proposes to issue and sell commercial paper. Short-term borrowings would mature no later than one year from the date of issuance, except in the case of borrowings by Union, which would mature no later than two years from the date of issuance. Such borrowings would bear interest at a rate no higher than the prime rate for commercial bank loans prevailing on the date of such borrowing. Commercial paper issued by PSI would have maturities not exceeding 270 days and would be sold to dealers at rates not exceeding those prevailing at the date of issuance for commercial paper of comparable quality and the same maturity.

Applicants propose that the maximum principal amount of short-term borrowings outstanding at any one time by PSI, Union, Lawrenceburg, West Harrison and Miami (whether from banks, the Money Pool or, in PSI's case, through the sale of commercial paper) not to exceed the following amounts: PSI, $400 million; Union, $50 million; West Harrison, $200,000; Lawrenceburg, $3 million; and Miami, $100,000. Applicants otherwise propose no change to the terms of the Money Pool authorized by the 1995 Order.

Proceeds of any short-term borrowings by the Utilities (whether from banks, the Money Pool or, in PSI's case, through the sale of commercial paper) would be used by such companies for general corporate purposes, including (a) interim financing of capital requirements; (b) working capital needs; (c) repayment, redemption, refinancing of debt or preferred stock; (d) cash requirements to meet unexpected contingencies and payment and timing differences; (e) loans through the Money Pool; and (f) other transactions relating to these applicants' utility businesses.

In addition, Cinergy and Investments propose to guarantee, through December 31, 2002, the debt or other obligations of (a) certain existing Cinergy system companies and (b) companies whose securities may be acquired by Cinergy or any of Cinergy's subsidiaries from time to time in accordance with rule 58 under the Act. Guaranties issued by Cinergy would be subject to the $1 billion aggregate limitation specified in the 1996 Order for letters of credit, short term promissory notes and commercial paper issued by Cinergy. Guaranties issued by Investments would not exceed $250 million at any one time outstanding.

The only existing Cinergy subsidiary on whose behalf Cinergy alone seeks authority to issue guarantees is Cinergy Services. The Cinergy subsidiaries on whose behalf Cinergy and Investments seek authority to issue guarantees are KO, Tri-State, Cinergy Resources, Inc., Cinergy Capital & Trading, Inc., Cinergy Technology, Inc. and Enertech Associates, Inc.

Debt financing so guaranteed will not exceed 30 years and will bear interest either at a floating rate not in excess of 200 basis points over the prime rate,

applicable LIBOR or other appropriate index in effect from time to time or at a fixed rate not in excess of 300 basis points above the yield at the time of issuance of U.S. Treasury obligations of a comparable maturity .

**Mineral Energy Company (70–9033)**

Mineral Energy Company (''MEC''), 101 Ash Street, San Diego, California 92101, a California corporation not currently subject to the Act, has filed an application for an order under sections 9(a) and 10 of the Act authorizing its proposed acquisition of all of the issued and outstanding common stock of (1) Pacific Enterprises (''Pacific''), a California corporation, and through such acquisition, Pacific's gas utility subsidiary, Southern California Gas Company (''SoCalGas''); and (2) Enova Corporation (''Enova''), a California corporation, and through such acquisition, Enova's combination electric and gas utility subsidiary, San Diego Gas & Electric Company (''SDG&E''). Pacific and Enova are neighboring California public utility holding companies exempt under section 3(a)(1) from all provisions of the Act except section 9(a)(2).[1] MEC also requests an order under section 3(a)(1) exempting it from all provisions of the Act, except section 9(a)(2), following consummation of the proposed transactions (''Transaction'').

Pacific's principal subsidiary, SoCalGas,[2] is a California public utility that owns and operates a natural gas distribution, transmission and storage system which supplies natural gas in 535 cities and communities throughout most of southern California and part of central California.[3] SoCalGas is subject to regulation by the California Public Utilities Commission (''CPUC'') with respect to its rates for intrastate transportation and retail sales of natural gas. In addition, certain of Pacific's subsidiaries are subject to regulation by the Federal Energy Regulatory Commission (''FERC'').

Pacific is also engaged in a number of energy-related businesses through approximately 50 subsidiaries organized into the following five business lines: (1) Pacific Energy engages in alternate energy development, centralized heating and cooling for large building complexes and energy management services; (2) Pacific Interstate Company provides interstate and offshore natural transmission to serve utility operations; (3) Pacific Enterprises Oil Company owns various mineral interests and a working interest in the Aliso Canyon Oil Field; (4) Pacific Enterprises International invests in foreign utility-related businesses; and (5) Ensource engages in gas marketing.

For the year ended December 31, 1996, Pacific's operating revenues on a consolidated basis were approximately $2.603 billion, of which approximately $2.076 billion were attributable to sales of natural gas, $386 million were attributable to transportation revenues, and $141 million were attributable to nonutility activities. Consolidated assets of Pacific and its subsidiaries at December 31, 1996 were approximately $5.186 billion, of which approximately $3.237 billion consisted of net gas plant and equipment. As of December 31, 1996, Pacific had 82,013,469 issued and outstanding shares of common stock, no par value (''Pacific Common Stock''), and 800,253 outstanding shares of preferred stock, no par value (''Pacific Preferred Stock'').

Enova's principal subsidiary, SDG&E,[4] is a California public utility that generates, purchases and transmits electric energy and distributes it through 1.2 million meters to customers in San Diego county and an adjacent portion of Orange County, California. SDG&E also purchases and distributes natural gas through 700,000 meters to customers in San Diego County and transports gas for others in SDG&E's service territory.[5] SDG&E is subject to regulation by the CPUC as a public utility with respect to retail electric and gas rates, and by the CPUC and FERC with respect to rates for the sale for resale of electricity.[6]

SDG&E has six nonutility subsidiaries, each a California corporation. Enova Financial, Inc. invests in limited partnerships representing approximately 1100 affordable-housing projects located throughout the United States. Califia Company leases computer equipment. Enova Energy, Inc. is an energy management consulting firm offering services to utilities and large consumers, including gas and electric marketing, scheduling services, facilities operation and management of customer energy demand and supply. Pacific Diversified Capital Company is the parent company of a nonutility subsidiary, Phase One Development, Inc., which is engaged in real estate development. Enova Technologies, Inc. is in the business of developing new technologies generally related to utilities and energy services. Enova International was formed to develop and operate natural gas and power projects outside the United States. A subsidiary of Enova International and a subsidiary of Pacific have entered into a joint venture to build and operate a natural gas distribution system in Mexicali, Baja California.

For the year ended December 31, 1996, Enova's operating revenues on a consolidated basis were approximately $1.993 billion, of which approximately $1.591 billion were attributable to its electric utility operations, approximately $348 million were attributable to its gas utility operations and approximately $54 million were attributable to its energy-related and other operations. Consolidated assets of Enova and its subsidiaries at December 31, 1996 were approximately $4.65 billion of which approximately $2.625 billion consists of net electric utility plant and $449 million consists of net gas plant. As of December 31, 1996, Enova had 116,628,735 outstanding shares of common stock, no par value (''Enova Common Stock''). Enova has no other class of equity securities.

MEC[7] was incorporated under California law to become a holding company for Pacific and Enova following consummation of the Transaction in accordance with the terms of an Agreement and Plan of Merger and Reorganization, dated as of October 12, 1996, as amended as of January 13, 1997 (''Merger Agreement''), among MEC, Enova, Pacific, B Mineral Energy Sub (''Pacific Sub'') and G Mineral Energy Sub (''Enova Sub'').[8]

[1] Pacific's section 3(a)(1) exemption was authorized by order of the Commission. *Pacific Lighting Corp.,* Holding Co. Act Release No. 43 (Jan. 13, 1936), *exemption continued,* Holding Co. Act Release No. 17855 (Jan. 11, 1973). Enova claims its section 3(a)(1) exemption based on a filing pursuant to rule 2.

[2] Pacific owns all of the issued and outstanding common stock of SoCalGas. SoCalGas also has outstanding a class of preferred stock, which is listed on the Pacific Stock Exchange.

[3] SoCalGas provides gas service to residential, commercial, industrial, electric generation and wholesale customers through approximately 4.7 million meters in a 23,000 square mile service area with a population of approximately 17.4 million people.

[4] Enova owns all of the issued and outstanding common stock of SDG&E. SDG&E also has outstanding two classes of preferred stock, most of the series of which are listed on the American Stock Exchange.

[5] SDG&E service area encompasses 4,100 square miles, covering two counties and 25 cities, with a population of approximately 3 million people.

[6] SDG&E is also subject to regulation by the Nuclear Regulatory Commission with respect to certain nuclear facilities in which it has a partial ownership interest.

[7] MEC's authorized capital consists of 1,000 shares of common stock, all of which are issued and outstanding (''MEC Common Stock''). Enova and Pacific each own 500 shares.

[8] Pacific Sub and Enova Sub, each a California corporation with an authorized share capital of 1,000 shares of common stock, no par value, were formed solely to facilitate the Transaction. MEC owns all of the issued and outstanding shares of

Continued

The Merger Agreement provides for the Transaction to be effected by (a) a merger of Pacific Sub with and into Pacific, with Pacific remaining as the surviving corporation and (b) a merger of Enova Sub with and into Envoa, with Enova remaining as the surviving corporation.

The application states that the combination of Pacific and Enova is expected to provide strategic, financial and other benefits to the shareholders of both companies, and their respective employees, customers and communities. Such benefits are anticipated to include cost savings and cost avoidances derived from the integration of corporate functions, corporate programs and field support functions, the streamlining of inventories and purchasing economics, and consolidation of facilities. The applicants state that the combination is timed to coincide with California electric utility deregulation and ongoing natural gas utility deregulation and is intended to establish a company that, by providing multiple energy products and services to customers at lower prices than either company could offer individually, will have the ability to compete effectively in the California and the rapidly developing national and international markets for energy and energy services.

Upon consummation of the proposed Transaction: (1) Each share of Pacific Common Stock [9] will be canceled and converted into the right to receive 1.5038 shares of MEC Common Stock; and (2) each share of Enova Common Stock [10] will be canceled and converted into the right to receive one share of MEC Common Stock. The Transaction will not affect any other class of common or preferred stock of the parties to the Transaction. Thus, any shares of Pacific Preferred Stock and preferred stock of SoCalGas and SDG&E outstanding on the date of the consummation of the Transaction will remain outstanding preferred stock of the same companies.

Upon completion of the Transaction, Pacific and Enova will become subsidiaries of MEC, which will own all of the issued and outstanding common stock of each of Pacific and Enova. Pacific and Enova would continue to own and operate their primary subsidiaries, SoCalGas and SEG&E, respectively.[11] MEC's Board of Directors will consist of an equal number of directors designated by Pacific and Enova. The Transaction is expected to qualify as tax-free reorganization under section 351 of the Internal Revenue Code of 1986, as amended.

As a result of the Transaction, MEC will be a public-utility holding company as defined in section 2(a)(7) of the Act with indirect ownership of two public-utility companies, SoCalGas and SDG&E. MEC states that following consummation of the Transaction, it will be entitled to an exemption from all provisions of the Act except section 9(a)(2) because it and each of its pubic-utility subsidiaries from which it derives a material part of its income will be predominantly intrastate in character and will carry on their utility businesses substantially within the state of California.

For the Commission, by the Division of Investment Management, pursuant to delegated authority.

**Margaret H. McFarland,**

*Deputy Secretary.*

[FR Doc. 97–11408 Filed 5–1–97; 8:45 am]

BILLING CODE 8010–01–M

common stock in each of Pacific Sub and Enova Sub.

[9] Shares of Pacific Common Stock owned by Enova, Pacific, MEC or any of their wholly-owned subsidiaries and shares as to which dissenters' rights are perfected will not be eligible for this treatment.

[10] Shares of Enova Common Stock owned by Enova, Pacific, MEC or any of their wholly-owned subsidiaries and shares as to which dissenters' rights are perfected will not be eligible for this treatment.

[11] Pursuant to the Merger Agreement, Pacific and Enova have formed a joint venture company (''JV Company'') with an initial capitalization of $10 million to engage in energy marketing activities and provide energy-related services. The JV Company is terminable by either party in the event the Merger Agreement is terminated.

## SECURITIES AND EXCHANGE COMMISSION

**[Rel. No. IC–22639; 812–10600]**

## WNC Housing Tax Credit Fund VI, L.P., Series 5 and 6, and WNC & Associates, Inc.; Notice of Application

April 28, 1997.

**AGENCY:** Securities and Exchange Commission (''SEC'' or ''Commission'').

**ACTION:** Notice of Application for Exemption under the Investment Company Act of 1940 (the ''Act'').

**APPLICANTS:** WNC Housing Tax Credit Fund VI, L.P., Series 5 and WNC Housing Tax Credit Fund VI, L.P., Series 6 (each a ''Series,'' and collectively, the ''Fund''), and WNC & Associates, Inc. (the ''General Partner'').

**RELEVANT ACT SECTIONS:** Exemption requested under section 6(c) from all provisions of the Act.

**SUMMARY OF APPLICATION:** Applicants request an order to permit each Series to invest in limited partnerships that engage in the ownership and operation of apartment complexes for low and moderate income persons.

**FILING DATES:** The application was filed on April 1, 1997. Applicants will file an amendment during the notice period, the substance of which is reflected herein.

**HEARING OR NOTIFICATION OF HEARING:** An order granting the application will be issued unless the SEC orders a hearing. Interested persons may request a hearing by writing to the SEC's Secretary and serving applicants with a copy of the request, personally or by mail. Hearing request should be received by the SEC by 5:30 p.m. on May 23, 1997, and should be accompanied by proof of service on applicants, in the form of an affidavit or, for lawyers, a certificate of service. Hearing requests should state the nature of the writer's interest, the reason for the request, and the issues contested. Persons may request notification of a hearing by writing to the SEC's Secretary.

**ADDRESSES:** Secretary, SEC, 450 Fifth Street NW., Washington, DC 20549. Applicants, 3158 Redhill Avenue, Suite 120, Costa Mesa, California 92626–3416.

**FOR FURTHER INFORMATION CONTACT:** Courtney S. Thornton, Senior Counsel, at (202) 942–0583, or Mary Kay Frech, Branch Chief, at (202) 942–0564 (Division of Investment Management, Office of Investment Company Regulation).

**SUPPLEMENTARY INFORMATION:** The following is a summary of the application. The complete application may be obtained for a fee at the SEC's Public Reference Branch.

### Applicants' Representations

1. Each Series was formed as a California limited partnership on March 3, 1997. Each Series will operate as a ''two-tier'' partnership, *i.e.*, each Series, as a limited partner, will invest in other limited partnerships (''Local Limited Partnerships''). The Local Limited Partnerships in turn will engage in the ownership and operation of apartment complexes expected to be qualified for low income housing tax credit under the Internal Revenue Code of 1986.

2. The objectives of each Series are to (a) provide current tax benefits primarily in the form of low income housing credits which investors may use to offset their Federal income tax liabilities, (b) preserve and protect Fund capital, and (c) provide cash distributions from sale or refinancing transactions.

3. On March 27, 1997, the Fund filed a registration statement under the Securities Act of 1993 pursuant to which the Fund intends to offer publicly, in one or more series of offerings, 50,000 units of limited partnership interest (''Units'') at $1,000 per unit. The minimum investment will be five Units for most investors, although employees of the General Partner and its affiliates and/or investors in syndications previously sponsored by the General Partner may purchase a minimum of two Units. Purchasers of the Units will become limited partners (''Limited Partners'') of the Series offering the Units.

4. A Series will not accept any subscriptions for Units until the requested exemptive order is granted or the Series receives an opinion of counsel that it is exempt from registration under the Act. Subscriptions for Units must be approved by the General Partner. Such approval will be conditioned upon representations as to suitability of the investment for each subscriber. The suitability standards provide, among other things, that investment is a Series is suitable only for an investor who either (a) has a net worth (exclusive of home, furnishings, and automobiles), of at least $35,000 and an annual gross income of at least $35,000, or (b) irrespective of annual income, has a net worth (exclusive of home, furnishings, and automobiles) of at least $75,000. Units will be sold only to investors who meet these suitability standards, or such more restrictive suitability standards as may be established by certain states for purchases of Units within their respective jurisdictions. In addition, transfers of Units will be permitted only if the transferee meets the same suitability standards as had been imposed on the transferor Limited Partner.

5. Although a Series' direct control over the management of each apartment complex will be limited, the Series' ownership of interests in Local Limited Partnerships will, in an economic sense, be tantamount to direct ownership of the apartment complexes themselves. A Series normally will acquire at least a 90% interest in the profits, losses, and tax credits of the Local Limited Partnerships. However, in certain cases, the Series may acquire a lesser interest in such partnerships. In these cases, the Series normally will acquire at least a 50% interest in the profits, losses, and tax credits of the Local Limited Partnership. From 95% to 100% of the proceeds from a sale or refinancing of an apartment complex normally will be paid to the Series until it has received a full return of that portion of the net proceeds invested in the Local Limited Partnership (which may be reduced by an cash flow distributions previously received). A Series also will receive a share of any remaining sale or refinancing proceeds. A Series' share of these proceeds may range from 10% to 90%.

6. Each Series will have certain voting rights with respect to each Local Limited Partnership. The voting rights will include the right to dismiss and replace the local general partner on the basis of performance, to approve or disapprove a sale or refinancing of the apartment complex owned by such Local Limited Partnership, to approve or disapprove the dissolution of the Local Limited Partnership, and to approve or disapprove amendments to the Local Limited Partnership agreement materially and adversely affecting the Series' investment.

7. Each Series will be controlled by the General Partner, pursuant to a partnership agreement (the ''Partnership Agreement''). The Limited Partners, consistent with their limited liability status, will not be entitled to participate in the control of the business of the Series. However, a majority-in-interest of the Limited Partners will have the right to amend the Partnership Agreement (subject to certain limitations), to remove any General Partner and elect a replacement, and to dissolve the Series. In addition, under the Partnership Agreement, each Limited Partner is entitled to review all books and records of the Series.

8. The Partnership Agreement and prospectus of the Series contain numerous provisions designed to insure fair dealing by the General Partner with the Limited Partners. All compensation to be paid to the General Partner and its affiliates is specified in the Partnership Agreement and prospectus. While the fees and other forms of compensation that will be paid to the General Partner and its affiliates will not have been negotiated at arm's length, applicants believe that the compensation is fair and on terms no less favorable to the Series than would be the case if such arrangements had been made with independent third parties.

9. During the offering and organizational phase, the General Partner and its affiliates will receive a dealer-manager fee and a nonaccountable expense reimbursement in amounts equal to 2% and 1%, respectively, of capital contributions. The General Partner also will be reimbursed by each Series for the actual amount of expenses incurred in connection with organizing the Series and conducting the offering. However, the General Partner has agreed to pay any organizational and offering expenses (including selling commissions, the dealer-manager fee, and the nonaccountable expense reimbursement) in excess of 13% of capital contributions.

10. During the acquisition phase, each Series will pay the General Partner or its affiliates a fee equal to 7% for analyzing and evaluating potential investments in Local Limited Partnerships. The General Partner and its affiliates will be reimbursed by each Series for the actual amount of any partnership acquisition expenses advanced by them, provided that acquisition expenses will not exceed 1.5% of capital contributions. Aggregate acquisition fees and acquisition expenses paid in connection with the acquisition of Local Limited Partnership interests by each Series will be limited by the Partnership Agreement and will comply with guidelines published by the North American Securities Administrators Association. These guidelines require that a specified percentage (generally 80%, but subject to reduction) of the aggregate Limited Partners' capital contributions to a Series be committed to Local Limited Partnership interests.

11. During the operating phase, the General Partner will receive 1% of any cash available for distribution and each Series may pay certain fees and reimbursements to the General Partner or its affiliates. An asset management fee will be payable for services related to the administration of the affairs of each Series in connection with each Local Limited Partnership in which the Series invests. Other fees may be paid in consideration of property management services provided by the General Partner or its affiliates as the management and leasing agents for some of the apartment complexes. In addition, the General Partner and its affiliates generally will be allocated 1% of profits and losses of each Series for tax purposes and tax credits.

12. During the liquidation phase, and subject to certain prior payments to the Limited Partners, each Series will pay the General Partner or its affiliates a fee equal to 1% of the sales price of the properties sold in which the General Partner or its affiliates have provided a substantial amount of services. The General Partner also will receive 10% of any additional sale or refinancing proceeds remaining after the return of the Limited Partners' capital contribution, subject to certain prior payments.

13. All proceeds from a Series' public offering of Units initially will be placed

in an escrow account with the National Bank of Southern California (''Escrow Agent''). Pending release of offering proceeds to the Series, the Escrow Agent will deposit escrowed funds in short-term United States Government securities, securities issued or guaranteed by the United States Government, and certificates of deposit or time or demand deposits in commercial banks. Upon receipt of a prescribed minimum amount of capital contributions for a Series, funds in escrow will be released to the Series and held by it pending investment in Local Limited Partnerships.

14. If investment opportunities may be invested in by more than one entity that the General Partner or its affiliates advises or manages, the decisions as to the particular entity that will be allocated the investment will be based upon such factors as the effect of the acquisition on diversification of each entity's portfolio, the estimated income tax effects of the purchase on each entity, the amount of funds of each entity available for investment, and the length of time such funds have been available for investment. Priority generally will be given to the entity having uninvested funds for the longest period of time. However, (a) any entity that was formed to invest primarily in apartment complexes eligible only for Federal low income housing credits will be given priority with respect to any investment that is not eligible for California low income housing credits, and (b) any entity that was formed to invest primarily in apartment complexes eligible for California low income housing credits as well as for Federal credits will be given priority with respect to any investment that is eligible for the California credits.

**Applicants' Legal Analysis**

1. Applicants believe that the Fund and its Series will not be ''investment companies'' under sections 3(a)(1) or 3(a)(3) of the Act. If the Fund and its Series are deemed to be investment companies, however, applicants request an exemption under section 6(c) from all provisions of the Act.

2. Section 3(a)(1) of the Act provides that an issuer is an ''investment company'' if it is or holds itself out as being engaged primarily, or proposes to engage primarily, in the business of investing, reinvesting, or trading in securities. Applicants, however, believe that the Partnership will not be an investment company under section 3(a)(1) because the Partnership will be in the business of investing in and being beneficial owner or apartment complexes, not securities.

3. Section 3(a)(3) of the Act provides that an issuer is an ''investment company'' if it is engaged or proposes to engage in the business of investing, reinvesting, owning, holding, or trading in securities, and owns or proposes to acquire ''investment securities'' having a value exceeding 40% of the value of such issuer's total assets (exclusive of Government securities and cash items). Applicants, however, believe that the Local Limited Partnership interests should not be considered ''investment securities'' because those interests are not readily marketable, have no value apart from the value of the apartment complexes owned by the Local Limited Partnerships, and cannot be sold without severe adverse tax consequences.

4. Applicants believe that the two-tier structure is consistent with the purposes and criteria set forth in the SEC's release concerning two-tier real estate partnerships (the ''Release'').[1] The Release states that investment companies that are two-tier real estate partnerships that invest in limited partnerships engaged in the development and operation of housing for low and moderate income persons may qualify for an exemption from the Act pursuant to section 6(c). Section 6(c) provides that the SEC may exempt any person from any provision of the Act and any rule thereunder, if, and to the extent that, such exemption is necessary or appropriate in the public interest and consistent with the protection of investors and the purposes fairly intended by the policy and provisions of the Act.

5. The Release lists two conditions, designed for the protection of investors, which must be satisfied by two-tier partnerships to qualify for the exemption under section 6(c). First, interests in the issuer should be sold only to persons for whom investments in limited profit, essentially tax-shelter, investments would not be unsuitable. Second, requirements for fair dealing by the general partner of the issuer with the limited partners of the issuer should be included in the basic organizational documents of the company.

6. Applicants assert, among other things, that the suitability standards set forth in the application, the requirements for fair dealing provided by the Partnership Agreement, and pertinent governmental regulations imposed on each Local Limited Partnership by various Federal, state, and local agencies provide protection to investors in Units comparable to that provided by the Act. In addition, applicants assert that the requested exemption is both necessary and appropriate in the public interest.

[1] ???

For the Commission, by the Division of Investment Management, pursuant to delegated authority.

**Margaret H. McFarland,**

*Deputy Secretary.*

[FR Doc. 97–11455 Filed 5–1–97; 8:45 am]

BILLING CODE 8010–01–M

## SECURITIES AND EXCHANGE COMMISSION

### Sunshine Act Meeting

Notice is hereby given, pursuant to the provisions of the Government in the Sunshine Act, Pub. L. 94–409, that the Securities and Exchange Commission will hold the following meeting during the week of May 5, 1997.

A closed meeting will be held on Monday, May 5, 1997, at 10:30 a.m.

Commissioners, Counsel to the Commissioners, the Secretary to the Commission, and recording secretaries will attend the closed meeting. Certain staff members who have an interest in the matters may also be present.

The General Counsel of the Commission, or his designee, has certified that, in his opinion, one or more of the exemptions set forth in 5 U.S.C. 552b(c) (4), (8), (9)(A) and (10) and 17 CFR 200.402(a) (4), (8), (9)(i) and (10), permit consideration of the scheduled matters at the closed meeting.

Commissioner Johnson, as duty officer, voted to consider the items listed for the closed meeting in a closed session.

The subject matter of the closed meeting scheduled for Monday, May 5, 1997, at 10:30 a.m., will be:

Institution and settlement of injunctive actions.

Institution of administrative proceedings of an enforcement nature.

At times, changes in Commission priorities require alterations in the scheduling of meeting items. For further information and to ascertain what, if any, matters have been added, deleted or postponed, please contact:

The Office of the Secretary at (202) 942–7070.

Dated: April 29, 1997.

**Jonathan G. Katz,**

*Secretary.*

[FR Doc. 97–11612 Filed 4–30–97; 8:45 am]

BILLING CODE 8010–01–M

## SECURITIES AND EXCHANGE COMMISSION

### Sunshine Act

**FEDERAL REGISTER CITATION OF PREVIOUS ANNOUNCEMENT:** [To Be Published].

**STATUS:** Closed Meeting.

**PLACE:** 450 Fifth Street, NW., Washington, DC.

**DATE PREVIOUSLY ANNOUNCED:** To be Published.

**CHANGE IN THE MEETING:** Additional Item.

The following item will be considered at a closed meeting scheduled to be held on Friday, May 2, 1997, at 10:00 a.m.:

Cooperation with other law enforcement organizations.

Commissioner Johnson, as duty officer, determined that Commission business required the above change and that no earlier notice thereof was possible.

At times, changes in Commission priorities require alterations in the scheduling of meeting items. For further information and to ascertain what, if any, matters have been added, deleted or postponed, please contact:

The Office of the Secretary, (202) 942–7070.

Dated: April 29, 1997.

**Jonathan G.Katz,**

*Secretary.*

[FR Doc. 97–11613 Filed 4–30–97; 11:27 am]

BILLING CODE 8010–01–M

---

## SECURITIES AND EXCHANGE COMMISSION

**[Release No. 34–38548; File No. SR–NASD–97–24]**

## Self-Regulatory Organizations; Notice of Filing of Proposed Rule Change by the National Association of Securities Dealers, Inc. Relating to Supervision and Record Retention Rules

April 25, 1997.

Pursuant to Section 19(b)(1) of the Securities Exchange Act of 1934 (''Act''),[1] and Rule 19b–4 thereunder,[2] notice is hereby given that on April 11, 1997, NASD Regulation, Inc. (''NASD Regulation'') filed with the Securities and Exchange Commission (''SEC'' or ''Commission'') the proposed rule change as described in Items I, II, and III below, which Items have been prepared by NASD Regulation. The Commission is publishing this notice to solicit comments on the proposed rule change from interested persons.

[1] 15 U.S.C. 78s(b)(1).

[2] 17 CFR 240.19b–4.

### I. Self-Regulatory Organization's Statement of the Terms of Substance of the Proposed Rule Change

NASD Regulation is proposing to amend National Association of Securities Dealers, Inc. (''NASD'' or ''Association'') Rules 3010, ''Supervision,'' and 3110, ''Books and Records,'' to revise the NASD's supervision and record retention rules to provide firms with flexibility in developing reasonable procedures for the review of correspondence with the public. Below is the text of the proposed rule change. Proposed new language is in italics; proposed deletions are in brackets.

Rule 3010. Supervision

(a) through (c) No change

(d) [Written Approval] *Review of Transactions and Correspondence*

(*1*) *Supervision of Registered Representatives.* Each member shall establish procedures for the review and endorsement by a registered principal in writing, on an internal record, of all transactions and *for the review by a registered principal of* [all] *incoming and outgoing written and electronic* correspondence of its registered representatives *with the public relating to the investment banking or securities business of such member* [pertaining to the solicitation or execution of any securities transactions]. *Such procedures should be in writing and be designed to provide reasonable supervision of each registered representative.*[3] *Evidence that these supervisory procedures have been implemented and carried out must be maintained and made available to the Association upon request.*

*(2) Review of correspondence. Each member shall develop written procedures that are appropriate to its business, size, structure, and customers for the review of incoming and outgoing written and electronic correspondence with the public relating to its investment banking or securities business. Where such procedures for the review of correspondence do not require pre-use review of all correspondence, they must include provision for the education and training of associated persons as to the firm's procedures governing correspondence; documentation of such education and training; and surveillance and follow-up to ensure that such procedures are implemented and adhered to.*

*(3) Retention of correspondence. Each member shall retain correspondence of registered representatives relating to its investment banking or securities business in accordance with Rule 3110 (''Books and Records''). The names of the persons who prepared outgoing correspondence and who reviewed the correspondence shall be ascertainable from the retained records and the retained records shall be readily available to the Association, upon request.*

(e) through (g) No change

Rule 3110. Books and Records

(a) Requirements

Each member shall *make* [keep] and preserve books, accounts, records, memoranda, and correspondence in conformity with all applicable laws, rules, regulations, and statements of policy promulgated thereunder and with the Rules of this Association *and as prescribed by Rule 17a–3. The record keeping format, medium, and retention period shall comply with Rule 17a–4 under the Securities Exchange Act of 1934.*

(b) through (g) No change

### II. Self-Regulatory Organization's Statement of the Purpose of, and Statutory basis For, the Proposed Rule Change

In its filing with the Commission, NASD Regulation included statements concerning the purpose of and basis for the proposed rule change and discussed any comments it received on the proposed rule change. The text of these statements may be examined at the places specified in Item IV below. NASD Regulation has prepared summaries, set forth in Sections A, B, and C below, of the most significant aspects of such statements.

*A. Self-Regulatory Organization's Statement of the Purpose of, and Statutory Basis for, the Proposed Rule Change*

1. Purpose

In May 1996, the SEC issued an Interpretive Release on the Use of Electronic Media by Broker-Dealers, Transfer Agents., and Investment Advisers for Delivery of Information.[4] That release expressed the views of the SEC with respect to the delivery of information through electronic media in satisfaction of requirements in the

[3] Pursuant to a telephone conversation between Mary Revell, Assistant General Counsel, NASD Regulation, Inc. and Katherine England, Assistant Director, Division of Market Regulation, SEC, on April 25, 1997, Commission staff has replaced the phrase ''reasonably supervise'' with the phrase ''provide reasonable supervision of.''

[4] *See* Release Nos. 33-7288; 34–37182; IC–21945; IA–1562 (May 9, 1996); 61 FR 24644 (May 15, 1996) (File No. S7–13–96).

federal securities laws, but did not address the applicability of any self-regulatory organization (''SRO'') rules. In the release the SEC did, however, strongly encourage the SROs to work with broker/dealer firms to adapt SRO supervisory review requirements governing communications with customers to accommodate the use of electronic communications.[5]

On September 12, 1996, the New York Stock Exchange, Inc. (''NYSE'') filed with the SEC a proposal to update its rules governing supervision of its member firms' communications with the public.[6] The NYSE's proposal is designed to recognize the growing use of new technology and new means of communication such as ''e-mail'' and the Internet while still providing for appropriate supervision and review. The NYSE's proposal currently is pending at the SEC.

The NYSE's current rules require firms to review all communications with the public relating to their business prior to use. For example, a registered representative's correspondence to a customer must be reviewed prior to being sent, and all incoming correspondence must be reviewed by the firm before it is given to the representative. Under the NYSE's proposal, prior review of all outgoing correspondence and review of all incoming corrrespondence would no longer be required. Instead, firms would be allowed flexibility in developing procedures for review of such correspondence tailored to the nature and size of a firm' busineess and customers. Other communications with the public, such as advertisements, sales literature, and research reports, loud continue to be subject to prior approval.

The NYSE's proposal would require firms to develop written procedures for review of communications with the public that are designed to provide reasonable supervision of each registered representative. In addition, any firm that does not conduct pre-use review of correspondence (whether electronic or manual) would be required to regularly educate and train employees about the organization's policies and procedures governing review of communications, document such education and training, and conduct surveillance to ensure compliance with such procedures.

The proposed rule change filed by the NYSE responds to the SEC's request to adapt supervision rules to accommodate the use of electronic communications. The proposed amendments to NASD rules governing supervision of correspondence similarly would respond to this request and would provide firms with flexibility in developing reasonable procedures for the review of correspondence. The NASD's proposed approach is designed to be consistent with the one proposed by the NYSE and thereby help to ensure a coordinated regulatory framework for supervision of manual and electronic correspondence.

*Supervision of Registered Representatives.* NASD Rule 3010(d)(1), as revised to reflect comments received and recommendations from the NASD's Membership Committee, [7] provides, among other things, that a firm must establish procedures for the review by a registered principal of each registered representative's outgoing and incoming manual and electronic correspondence with the public relating to the member's investment banking or securities business. The procedures must be designed to provide reasonable supervision of each registered representative, must be described in the firm's written supervisory procedures, and implementation and execution of these procedures must be clearly evidenced. In developing these procedures, members should specify, among other things, what types of correspondence will be pre- or post-reviewed; where the reviews will be conducted; the position and qualifications of persons who will conduct the reviews; the frequency of reviews; the nature of type of review to be conducted; and how the reviews will be documented.

Under the proposal , review of each item of correspondence no longer will be required. Instead, firms could use reasonable sampling techniques, such as random spot-checking of e-mail logs. In order for this method to be effective, NASD Regulation expects that members should require review of some portion of the electronic mail sent and received by each registered representative, with special emphasis on messags delivered to or received from customers of the members.

In addition, while written approval of correspondence no longer would be mandated, firms should specify the means for evidencing review. For example, firms could electronically review e-mail correspondence relating to the firm's investment banking or securities business and could electronically record evidence of the review.

*Procedures for Review of Correspondence:* As revised to reflect comments received and recommendations from the NASD's Membership Committee, NASD Rule 3010(d)(2) would require each member to develop written procedures for review of incoming and outgoing correspondence with the public relating to its investment banking or securities business tailored to its structure and the nature and size of its business and customer base. In developing supervisory procedures for the review of correspondence with the public, members should consider the following suggestions. For example, members should determine whether it is more appropriate to implement uniform procedures or procedures tailored to specific functions, offices or locations, individuals, groups of persons, or specific registration categories. In this regard, members may consider such factors as the number, size and location of offices; the volume of communications overall and in specific areas of the organization; the types of activities conducted by registered representatives and other applicable persons; the nature and extent of training provided; the complaint and overall disciplinary record, if any, of registered representatives and other applicable persons (with particular emphasis on complaints regarding written or oral communications with clients); and the overall experience levels of registered representatives and other applicable persons using communications media.

In addition, reasonable procedures in some cases might require review of all correspondence of particular individuals. The supervisory system should provide specific processes for the receipt and handling of incoming checks and customer complaints as well as standards for correspondence indicating permitted and prohibited activities and any restrictions imposed by the member upon such correspondence. The procedures also should address communications with customers from outside of the workplace.

While the proposed rule does not require review of all correspondence, any member that does not conduct electronic or manual pre-use review of each item of correspondence will be required to: regularly educate and train its associated persons as to the firm's procedures governing review of correspondence; document such

[5] *Id.*, note 5.

[6] *See* securities Exchange Act Release No. 37941 (November 13, 1996), 61 FR 58919 (November 19, 1996) (File No. SR–NYSE–96–26) (soliciting comment on the NYSE's proposed rule change).

[7] For a discussion of comment received on the proposed changes and the recommendations of NASD's Membership Committee, *see infra* notes 9–20 and accompanying test.

education and training; and monitor to ensure implementation and compliance with such procedures. This provision is a departure from the NASD's current rule, which requires members to review and endorse in writing all correspondence, but allows such review and endorsement to occur after use. However, the NASD's proposed rule is consistent with the rule proposed by the NYSE. Also, the NASD's proposed rule provides sufficient flexibility such that members that do not wish to conduct prior review of correspondence have the option of conducting education and training as to the firm's procedures instead. Accordingly, the proposed rule would create a ''default'' standard that is more stringent than the current rule in requiring pre-use review. The Notice to Members announcing adoption of this rule will provide guidance to members on how the education and training provisions should be implemented.

Firms may incorporate the required education and training on correspondence procedures into their Continuing Education Firm Element training program.[8] However, education and training must be timely and must apply to all appropriate employees, including employees who may not be included under the Continuing Education requirements.

*Retention of Correspondence:* Under amended NASD Rule 3010(D)(3), each member must retain correspondence in accordance with amended NASD Rule 3110. NASD Rule 3010(d)(3) also requires that the names of the persons who prepared and reviewed correspondence must be ascertainable from the retained records and the records must be made available to the NASD upon request.

*Books and Records:* NASD Rule 3110(a) has been amended to recognize that records must be made and preserved as prescribed by all applicable rules, regulations and NASD rules and with Rule 17a–3 under the Act. The record keeping format, medium, and retention period must comply with Rule 17a–4 under the Act.[9]

2. Statutory Basis

NASD Regulation believes that the proposed rule change is consistent with the provisions of Section 15A(b)(6) of the Act,[10] which requires, among other things, that the Association's rules be designed to prevent fraudulent and manipulative acts and practices, to promote just and equitable principles of trade, remove impediments to and perfect the mechanism of a free and open market, and, in general, to protect investors and the public interest and not be designed to permit unfair discrimination between brokers or dealers. The NASD believes that allowing broker/dealer firms to use new technology and new means of communication, such as e-mail and the Internet, while still providing for appropriate supervision and review, will further these requirements.

*B. Self-Regulatory Organization's Statement on Burden on Competition*

NASD Regulation does not believe that the proposed rule change will result in any burden on competition that is not necessary or appropriate in furtherance of the purposes of the Act, as amended.

*C. Self-Regulatory Organization's Statement on Comments on the Proposed Rule Change Received From Members, Participants, or Others*

The proposed rule change was published for comment in Notice to Members 96–82 (December 1996) (''NTM 96–82''). The comment period closed on January 30, 1997. Nineteen comment letters were filed on the proposed rule.[11]

The comments filed on the proposed rules were overwhelmingly positive. The commenters praised NASD Regulation for proposing rule amendments that will allow each firm the flexibility to develop procedures for the review of correspondence tailored to the nature and size of its business and customers. The commenters also commended NASD Regulation for harmonizing its supervision requirements with those of the NYSE. Commenters did, however, make some suggestions about how the rule could be clarified or amended.

*Correspondence with the public:* NASD's current supervision rule requires firms to establish procedures for the review of all of its registered representatives' correspondence *pertaining to the solicitation or execution of any securities transactions.* The rule proposed in NTM 96–82 would require the review of registered representatives' correspondence *relating to the business of the member.*

NASD Regulation received 12 comments on this change.[12] Many of the commenters requested a clarification that only correspondence with the public must be reviewed. Otherwise, they stated, the rule could be construed to apply to internal communications or to correspondence between members and third parties other than customers. Also, this would conform the rule to the intention stated in the text of NTM 96–82. This clarification has been made by adding the words ''with the public'' to paragraphs 3010 (d)(1) and (d)(2).

Three commenters believe the rule change is overly expansive, burdensome, and unjustified.[13] They urge NASD Regulation to retain the language in the current rule. Notwithstanding these comments,

[8] *See* NASD Rule 1120, ''Continuing Education Requirements.''

[9] The SEC recently proposed for comment amendments to its broker/dealer books and records rules. *See* Securities Exchange Act Release No. 37850 (October 22, 1996), 61 FR 55593 (October 28, 1996) (File No. S7–27–96).

[10] 15 U.S.C. 78o–3(b)(6).

[11] NASD Regulation received the following comment letters: (1) Letter from Brian C. Underwood, A.G. Edwards & Sons, Inc., to Joan Conley, NASD Regulation, dated January 28, 1997 (''A.G. Edwards''); (2) Letter from Rockell Metcalf, American Express Financial Advisors Inc., to Joan Conley, NASD Regulation, dated January 30, 1997 (''AEFA''); (3) Letter from Neal E. Nakagiri, Associated Securities Corp., to Joan Conley, NASD Regulation, dated January 20, 1997 (''Associated Securities''); (4) Letter from Rita Adler, CoreStates Securities Corp., to Joan Conley, NASD Regulation, dated January 30, 1997 (''CSC''); (5) Letter from Brad Sutherland, D.A. Davidson & Co., to Joan Conley, NASD Regulation, dated January 11, 1997 (''D.A. Davidson''); (6) Letter (e-mail message) from David Fry dated January 3, 1997 (''David Fry''); (7) Letter from R. Gerald Baker, Everen Securities, to Joan Conley, NASD Regulation, dated January 30, 1997 (''Everen''); (8) Letter from Michael L. Michael, Fidelity Investments, to Joan Conley, NASD Regulation, dated January 29, 1997 (''Fidelity''); (9) Letter from Adam N. Antoniades, First Allied Securities Inc., to Joan Conley, NASD Regulation, dated January 29, 1997 (''First Allied''); (10) Letter from Alexander C. Gavis, Investment Company Institute, to Joan Conley, NASD Regulation, dated January 30, 1997 (''ICI''); (11) Letter from Thomas P. Koutris, John Hancock Mutual Life Insurance Co., to Joan Conley, NASD Regulation, dated January 31, 1997 (''John Hancock''); (12) Letter from Kenneth S. Spirer, Merrill Lynch, to Joan Conley, NASD Regulation, dated January 27, 1997 (''Merrill Lynch''); (13) Letter from Michael L. Kerley, MML Investors Services, Inc., to Joan Conley, NASD Regulation, dated January 27, 1997 (''MML''); (14) Letter from Peter J. Bernota to Joan Conley, NASD Regulation, dated January 22, 1997 (''Peter J. Bernota''); (15) Letter from George P. Miller, PSA The Bond Market Trade Association, to Joan Conley, NASD Regulation, dated January 24, 1997 (requesting an extension of time to file comments); (16) Letter from William P. Hayes and R. May Lee, PSA The Bond Market Trade Association, to Joan Conley, NASD Regulation, dated February 7, 1997 (''PSA''); (17) Letter from Stephen Putnam, Robert Thomas Securities, to R. Clark Hooper, NASD Regulation, dated January 9, 1997 (''Robert Thomas Securities''); (18) Letter from Kenneth S. Spirer, R. Gerald Baker, C. Evan Stewart, and Robert C. Errico, Securities Industry Association, to Joan Conley, NASD Regulation, dated February 7, 1997 (''SIA''); and (19) Letter from Henry H. Hopkins and David Roscum, T. Rowe Price, to Joan Conley, NASD Regulation, dated February 11, 1997 (''T. Rowe Price'').

Copies of the Comment Letter received by NASD Regulation in response to NTM 96–82 are available for inspection and copying at NASD Regulation or at the Commission's Public Reference Room.

[12] *See* letters from A.G. Edwards, AEFA, Associated Securities, D.A. Davidson, Everen, Fidelity, ICI, John Hancock, MML, Peter J. Bernota, PSA, and T. Rowe Price.

[13] *See* letters from John Hancock, MML, and T. Rowe Price.

NASD Regulation has determined to retain the language as proposed, for several reasons. First, conforming the rule language to the language in the NYSE rule will help to ensure a coordinated regulatory approach to the supervision of correspondence. Second, the amended language is consistent with language in SEC Rule 17a–4, which requires a broker/dealer to preserve records of all communications relating to its business. Also, limiting the review requirement to correspondence pertaining to securities transactions may be too narrow to capture information important to an effective supervision program. Finally, limiting the review requirement to correspondence *with the public,* as described above, will significantly address the concerns raised by these commenters.

One commenter asked if certain electronic communications, depending on their content, could be treated as oral ''conversations'' rather than correspondence, such that the content requirements of the NASD's advertising rules would apply, rather than the supervision and record retention rules.[14] In response, NASD Regulation notes that the SEC in its recent release on Reporting Requirements for Brokers or Dealers under the Act on record retention requirements applicable to electronic communications,[15] has stated:

> for record retention purposes under Rule 17a-4, the content of the electronic communication is determinative, and therefore broker-dealers must retain those e-mail and Internet communications (including inter-office communications) which relate to the broker-dealer's ''business as such.''

Similarly, the proposed rule focuses on the content of electronic (and manual) correspondence by requiring each member to develop supervisory procedures for the review of written and electronic correspondence with the public *relating to its investment banking or securities business.* This obligation to review correspondence is not obviated by a firm's classification of e-mail correspondence as equivalent to an oral ''conversation.''

*Incoming correspondence:* Three commenters discussed the proposed requirement that both *incoming* and outgoing correspondence must be reviewed.[16] One commenter asked NASD Regulation to clarify that incoming correspondence would be subject to review.[17] NASD Regulation has made this clarification by adding the words ''incoming and outgoing'' to paragraphs 3010 (d)(1) and (d)(2).

Two of the commenters are insurance-affiliated broker/dealers.[18] They stated that it would be extremely difficult for an insurance-affiliated broker/dealer to comply with the requirement to review incoming correspondence. Most of their registered representatives are primarily life insurance salespersons who conduct business in non-branch locations (*e.g.,* in their homes or at insurance company offices). Also, virtually all correspondence is addressed to the insurance company or to the agents personally, and most correspondence pertains to the life insurance business. Both because of the location where these agents/registered representatives conduct business and because most of their correspondence is addressed to a non-broker/dealer entity, these commenters maintain that it would be improper, illegal, and impossible for a principal to open and review it.

NASD Regulation has determined to amend the rule as proposed in NTM 96–82 explicitly to require the review of incoming correspondence. The proposed rule provides a firm with flexibility to develop procedures for the review of correspondence tailored to its structure and the nature of its business. Also, the proposed changes lessen the regulatory burden by eliminating the requirement to review and endorse each piece of correspondence. Supervisory review of incoming correspondence in many circumstances may be particularly valuable in detecting potential problems with a registered representative's conduct or a customer complaint. NASD Regulation believes that a review of incoming correspondence is a valuable method for early detection of problems and believes that rule provides insurance-affiliated members with the needed flexibility to devise appropriate procedures for reviewing correspondence. Therefore, the proposed language has been retained.

*Education and training:* Four commenters addressed this provision of the proposed rule.[19] Two of the commenters requested that firms be allowed flexibility in developing appropriate education and training as to the firm's procedures governing correspondence.[20] Since the rule already allows this flexibility by permitting firms to develop procedures tailored to the nature and size of their business and customers, NASD Regulation does not believe an amendment is necessary to respond to this comment.

In response to a request from one commenter,[21] the staff wishes to clarify that a member may fulfill its education and training requirements in conjunction with compliance with NASD Continuing Education requirements. This is consistent with the position the NYSE has taken on this issue, as stated in its draft Information Memo, submitted in conjunction with the NYSE's proposal.[22]

Finally, at its meeting on February 19, 1997, the NASD's Membership Committee discussed the proposed rule, the comments that have been received on the proposal, and the changes the staff proposed to make to respond to the comments. The NASD's Membership Committee was supportive of all of the changes the staff recommended. However, the NASD's Membership Committee asked staff to also consider revising the proposed rule to require members to supervise and review only correspondence *relating to their investment banking or securities business* instead of correspondence *relating to their business.* NASD's Membership Committee members stated that member firms may conduct a business in capacities other than as broker/dealers and suggested that language be added to clarify the rule so that it could not be interpreted to apply to areas beyond the securities business of the member. Although this is a minor department from the NYSE rule, which requires members to review communications relating to the firm's business, NASD Regulation has limited application of the rule to correspondence related to the securities or investment banking business of a member.

## III. Date of Effectiveness of the Proposed Rule Change and Timing for Commission Action

Within 35 days of the date of publication of this notice in the **Federal Register** or within such longer period (i) as the Commission may designate up to 90 days of such date if it finds such longer period to be appropriate and publishes its reasons for so finding or (ii) as to which the self-regulatory organization consents, the Commission will:

A. by order approve such proposed rule change, or

[14] *See* letter from A.G. Edwards.

[15] *See* Securities Exchange Act Release No. 38245 (February 5, 1997), 62 FR 6469 (February 12, 1997) (File No. S7–21–93).

[16] *See* letters from AEFA, John Hancock, and MML.

[17] *See* letter from John Hancock.

[18] *See* letters from John Hancock and MML.

[19] *See* letters from D.A. Davidson, First Allied, ICI, and John Hancock.

[20] *See* letters from First Allied and John Hancock.

[21] *See* letter from ICI.

[22] *See supra* note 4.

B. institute proceedings to determine whether the proposed rule change should be disapproved.

## IV. Solicitation of Comments

Interested persons are invited to submit written data, views, and arguments concerning the foregoing. Persons making written submissions should file six copies thereof with the Secretary, Securities and Exchange Commission, 450 Fifth Street, N.W., Washington, D.C. 20549. Copies of the submission, all subsequent amendments, all written statements with respect to the proposed rule change that are filed with the Commission, and all written communications relating to the proposed rule change between the Commission and any person, other than those that may be withheld from the public in accordance with the provisions of 5 U.S.C. 552, will be available for inspection and copying in the Commission's Public Reference Room. Copies of such filing will also be available for inspection and copying at the principal office of the NASD. All submissions should refer to File No. SR–NASD–97–24 and should be submitted by [insert date 21 days from the date of publication].

For the Commission, by the Division of Market Regulation, pursuant to delegated authority.[23]

**Margaret H. McFarland,**

*Deputy Secretary.*

[FR Doc. 97–11454 Filed 5–23–97; 8:45 am]

BILLING CODE 8010–01–M

[23] 17 CFR 200.30–3(a)(12).

## SOCIAL SECURITY ADMINISTRATION

### Agency Information Collection Activities: Proposed Collection Requests

This notice lists information collection packages that will require submission to the Office of Management and Budget (OMB), in compliance with PL. 104–13 effective October 1, 1995, The Paperwork Reduction Act of 1995.

1. Childhood Disability Evaluation—0960–0568. The information collected on form SSA–538 is used by SSA and the State Disability Determination Services (DDS) to record medical and functional findings concerning the severity of impairments of children claiming SSA benefits based on disability. The form is used for initial determinations of eligibility, in appeals and in initial continuing disability reviews. The respondents are State DDS offices.

*Number of Responses:* 1,066,000.

*Frequency of Response:* 1.

*Average Burden Per Response:* 20 minutes.

*Estimated Annual Burden:* 355,333 hours.

2. Statement for Self-Employment Income—0960–0046. The information collected on form SSA–766 is needed to determine quarters of coverage for eligibility to Social Security benefits. The information will be used to expedite the payment of benefits to an individual who is self-employed and who is establishing insured status in the current year. The respondents are self-employed applicants for Social Security benefits.

*Number of Respondents:* 5,000.

*Frequency of Response:* 1.

*Average Burden Per Response:* 5 minutes.

*Estimated Average Burden:* 417 hours.

Written comments and recommendations regarding the information collection(s) should be sent within 60 days from the date of this publication, directly to the SSA Reports Clearance Officer at the following address: Social Security Administration, DCFAM, *Attn:* Nicholas E. Tagliareni, 6401 Security Blvd., 1–A–21 Operations Bldg., Baltimore, MD 21235.

In addition to your comments on the accuracy of the agency's burden estimate, we are soliciting comments on the need for the information; its practical utility; ways to enhance its quality, utility and clarity; and on ways to minimize burden on respondents, including the use of automated collection techniques or other forms of information technology.

To receive a copy of any of the forms or clearance packages, call the SSA Reports Clearance Officer on (410) 965–4125 or write to him at the address listed above.

Dated: April 24, 1997.

**Nicholas E. Tagliareni,**

*Reports Clearance Officer, Social Security Administration.*

[FR Doc. 97–11242 Filed 4–30–97; 8:45 am]

BILLING CODE 4190–29–P

## DEPARTMENT OF TRANSPORTATION

### Office of the Secretary

### Reports, Forms and Recordkeeping Requirements; Agency Information Collection Activity Under OMB Review

**AGENCY:** Office of the Secretary, DOT.

**ACTION:** Notice.

**SUMMARY:** In compliance with the Paperwork Reduction Act of 1995 (U.S.C. 3501 *et seq.*), this notice announces that the Information Collection Request (ICR) abstracted below has been forwarded to the Office of Management and Budget (OMB) for review and comment. The ICR describes the nature of the information collection and its expected cost and burden. The **Federal Register** Notice with a 60-day comment period soliciting comments on the following collections of information was published on February 11, 1997 [62 FR 6301–6302].

**DATES:** Comments must be submitted on or before June 2, 1997.

**FOR FURTHER INFORMATION CONTACT:** Bernie Stankus, Office of Airline Information, K–25, Bureau of Transportation Statistics, 400 Seventh Street, SW., Washington, DC. 20590, (202) 366–4387.

**SUPPLEMENTARY INFORMATION:**

### Bureau of Transportation Statistics (BTS)

*Title:* Form 298–C Report of Financial and Operating Statistics for Small Aircraft Operators.

*Type of Request:* Extension of a currently approved information collection.

*OMB Control Number:* 2138–0009.

*Affected Public:* Small certificated and commuter air carriers.

*Abstract:* Small certificated air carriers (operate aircraft with 60 seats or less or with 18,000 pounds of payload capacity of less) must file the following five quarterly schedules: A–1 Report of Flight and Traffic Statistics in Scheduled Passenger Operations; E–1 Report of Nonscheduled Passenger Enplanements by Small Certificated Air Carriers; F–1 Report of Financial Data; F–2 Report of Aircraft Operating Expenses and Related Statistics; and T–1 Report of Revenue Traffic by On-Line Origin and Destination. Commuter air carriers must file the following three quarterly schedules: A–1 Report of Flight and Traffic Statistics in Scheduled Passenger Operations; F–1 Report of Financial Data; and T–1 Report of Revenue Traffic by On-Line Origin and Destination.

*Estimated Annual Burden:* 5,000 hours.

*Number of Respondents:* 100.

*Need:* Program Uses of Form 298–C Data.

**ADDRESSES:** Send comments to the Office of Information and Regulatory Affairs, Office of Management and Budget, 725–17th Street, NW., Washington, DC 20503, Attention DOT Desk Officer.

*Comments are invited on:* whether the proposed collection of information is

necessary for the proper performance of the functions of the Department, including whether the information will have practical utility; the accuracy of the Department's estimate of the burden of the proposed information collection; ways to enhance the quality, utility and clarity of the information to be collected; and ways to minimize the burden of the collection of information on respondents, including the use of automated collection techniques or other forms of information technology.

Issued in Washington, DC, on April 29, 1997.

**Vanester M. Williams,**

*Clearance Officer, United States Department of Transportation.*

[FR Doc. 97–11480 Filed 5–1–97; 8:45 am]

BILLING CODE 4910–62–P

## DEPARTMENT OF TRANSPORTATION

### Aviation Proceedings, Agreements Filed During the Week of April 18, 1997

The following Agreements were filed with the Department of Transportation under the provisions of 49 U.S.C. 412 and 414. Answers may be filed within 21 days of date of filing.

*Filing Date:* 4–17–97
*Docket Number:* OST–97–2360
*Description:* International Air Transport Association, David M. O'Connor, Director, External Relations—U.S., 1001 Pennsylvania Ave., NW., #285, Washington, DC 20004
Telex PTC3 Mail Vote 867 Osaka-Cheongju fares r1–9
Intended effective date: April 29, 1997
r–1—043d r–5—076LL
r–2—053d r–6—081tt
r–3—063d r–7—090kk
r–4—063dd r–8—092hh
r–9—092t

**Paulette V. Twine,**

*Chief, Documentary Services.*

[FR Doc. 97–11435 Filed 5–1–97; 8:45 am]

BILLING CODE 4910–62–P

## DEPARTMENT OF TRANSPORTATION

### Aviation Proceedings, Agreements Filed During the Week of April 25, 1997.

The following Agreements were filed with the Department of Transportation under the provisions of 49 U.S.C. 412 and 414. Answers may be filed within 21 days of date of filing.

*Docket Number:* OST–97–2370.
*Date Filed:* April 21, 1997.
*Parties:* Members of the International Air Transport Association.
*Subject:*
CAC/Reso/187 dated April 14, 1997
Expedited Cargo Agency Resolutions r1–3
Intended effective date: June 1, 1997
r-1—801r
r-2—813
r-3—813e

**Paulette V. Twine,**

*Chief Documentary Services.*

[FR Doc. 97–11482 Filed 5–1–97; 8:45 am]

BILLING CODE 4910–62–P

## DEPARTMENT OF TRANSPORTATION

### Notice of Applications for Certificates of Public Convenience and Necessity and Foreign Air Carrier Permits Filed Under Subpart Q During the Week Ending April 25, 1997

The following Applications for Certificates of Public Convenience and Necessity and Foreign Air Carrier Permits were filed under Subpart Q of the Department of Transportation's Procedural Regulations (See 14 CFR 302.1701 *et seq.*). The due date for Answers, Conforming Applications, or Motions to modify Scope are set forth below for each application. Following the Answer period DOT may process the application by expedited procedures. Such procedures may consist of the adoption of a show-cause, a tentative order, or in appropriate cases a final order without further proceedings.

*Docket Number:* OST–97–2372

*Date Filed:* April 22, 1997

*Due Date for Answers, Conforming Applications, or Motion to Modify Scope:* May 20, 1997

*Description:* Application of Delta Air Lines, Inc. pursuant to 49 U.S.C. Section 41102, and Subpart Q of the Regulations, applies for a new or amended certificate of public convenience and necessity to authorize it to provide scheduled foreign air transportation from a point or points in the United States via intermediate points to Arica, Antofagasta, and Santiago, Chile, and beyond; and

Requests destination and allocation of seven (7) U.S.-Chile frequencies available for U.S.-Chile combination services, for a term of five (5) years.

**Paulette V. Twine,**

*Chief, Documentary Services.*

[FR Doc. 97–11481 Filed 5–1–97; 8:45 am]

BILLING CODE 4910–62–P

## DEPARTMENT OF TRANSPORTATION

### Federal Aviation Administration

### Type Certification Procedures for Changed Products

**AGENCY:** Federal Aviation Administration (FAA), DOT.

**ACTION:** Notice of availability for public comment.

**SUMMARY:** This notice announces the availability of and requests comments on the proposed advisory circular (AC), Advisory Material for the Evaluation of the Certification Basis of Changed Aeronautical Products, pertaining to the type certification procedures for changed products. Elsewhere in this edition of the **Federal Register**, the FAA has issued a Notice of Proposed Rulemaking (NPRM), Type Certification Procedures for Changed Products, which would revise certain sections in part 21 of Title 14 of the Code of Federal Regulations. This proposed AC provides guidance for determining compliance with those proposed sections.

**DATES:** Comments must be identified by the name of the AC and be received on or before September 2, 1997.

**ADDRESSES:** Send all comments on this proposed AC to: Certification Procedures Branch, AIR–110, Aircraft Engineering Division, Aircraft Certification Service, Federal Aviation Administration, 800 Independence Avenue SW., Washington, DC 20591, or deliver comments to room 815 at the same address.

**FOR FURTHER INFORMATION CONTACT:** Lyle C. Davis, Certification Procedures Branch (AIR–110), Aircraft Certification Service, Federal Aviation Administration, 800 Independence Avenue, SW., Washington, DC 20591, telephone (202) 267–9588.

**SUPPLEMENTARY INFORMATION:**

#### Comments Invited

Interested persons are invited to comment on the proposed AC listed in this notice by submitting such written data, views, or arguments as they may desire. Comments received on the proposed AC may be examined, before and after the comment closing date, in Room 815, FAA Headquarters Building (FOB–10A), 800 Independence Avenue, SW., Washington, DC 20591, weekdays, except Federal holidays, between 8:30 a.m. and 4:30 p.m. By separate notice, in this edition of the **Federal Register**, the FAA is also inviting interested persons to comment on the notice of proposed rulemaking. The FAA will consider comments from this notice and comments received on the notice of

proposed rulemaking in deciding the nature of final action on each.

**Background**

New procedural regulations are being proposed in a Notice of Proposed Rulemaking, Type Certification Procedures for Changed Products, as a result of a trend towards fewer products that are of such significantly new design that a new type certificate is required. This proposal would require the starting point for determining the certification basis for an amended or supplemental type certificate to be the regulations in effect at the date of the application for the change, rather than those regulations incorporated by reference in the type certificate. Exceptions would be provided to permit the applicant, under certain conditions, to comply with previous amendments to those regulations.

**Advisory Circular**

This AC provides guidance for the applicant to comply with the regulations proposed in the Notice of Proposed Rulemaking, Type Certification Procedures for Changed Products.

**Proposed § 21.101(b)(3): Determining Whether Compliance Would Not Materially Contribute to the Level of Safety of the Changed Product or Would Be Impractical**

Proposed § 21.101(b)(3) states that an applicant's changed product may be shown to comply with an earlier amendment to a regulation in effect on the date of the application for the change, if compliance with that later regulation would not materially contribute to the level of safety of the changed product or would be impractical.

Parts of the associated NPRM published in this edition of the **Federal Register**, and parts of this proposed AC, resulted from a recommendation from the Aviation Rulemaking Advisory Committee (ARAC). Appendix 2 of this proposed AC contains a ''safety benefit—resource evaluation guide,'' which was recommended by the ARAC. As explained in the introduction to Appendix 2, the FAA has declined to include the safety benefit—resource evaluation guide as a means of compliance with proposed § 21.101(b)(3). However, the ARAC-recommended guide does describe some of the issues that should be considered in making a case about complying with the later regulations under proposed § 21.101(b)(3). Thus, it is being proposed for inclusion for information purposes. An applicant seeking approval of a changed aeronautical product can review this guidance prior to developing an argument that compliance with a regulation in effect at the date of the application for the change would be impractical. In using a similar guide, an applicant would have to demonstrate how his charts, values, and graphs demonstrate compliance with the proposed section.

For the procedure in Appendix 2, the points on the charts represent the mean derived from the experience of a number of engineers who have been involved in certification programs. The numbers on the charts were adjusted to reflect a review of several alternations of air carrier transport category airplanes, with respect to the revision of part 25.

Issued in Washington, DC, on April 22, 1997.

**Ava L. Mims,**

*Acting Director, Aircraft Certification Service.*

[FR Doc. 97–11206 Filed 5–1–97; 8:45 am]

BILLING CODE 4910–13–M

---

## DEPARTMENT OF TRANSPORTATION

### Federal Aviation Administration

### Approval of Noise Compatibility Program; Boise Air Terminal, Boise, ID

**AGENCY:** Federal Aviation Administration, DOT.

**ACTION:** Notice.

**SUMMARY:** The Federal Aviation Administration (FAA) announces its findings on the noise compatibility program submitted by the Airport Director of the Boise Air Terminal under the provisions of Title I of the Aviation Safety and Noise Abatement Act of 1979 (Pub. L. 96–193) and 14 CFR part 150. These findings are made in recognition of the description of Federal and non-Federal responsibilities in Senate Report No. 96–52 (1980). On September 18, 1996, the FAA determined that the noise exposure maps submitted by the Airport Director under Part 150 were in compliance with applicable requirements. On Marcy 17, 1997, the Associate Administrator for Airports approved the Boise Air Terminal noise compatibility program. Twenty of the twenty-three program measures were approved. Two were disapproved for purposes of Part 150 because they permit continued noncompatible development in an established noise contour, even though they are at lower densities. One measure was partially approved because it contains a zoning segment that is not related to reducing or preventing noncompatible land uses.

**EFFECTIVE DATE:** The effective date of the FAA's approval of the Boise Air Terminal noise compatibility program is March 17, 1997.

**FOR FURTHER INFORMATION CONTACT:** Dennis G. Ossenkop; Federal Aviation Administration; Northwest Mountain Region; Airports Division, ANM–611; 1601 Lind Avenue, SW., Renton, Washington, 98055–4056. Documents reflecting this FAA action may be reviewed at this same location.

**SUPPLEMENTARY INFORMATION:** This notice announces that the FAA has given its overall approval to the noise compatibility program for Boise Air Terminal, effective March 17, 1997. Under Section 104(a) of the Aviation Safety and Noise Abatement Act of 1979 (hereinafter referred to as ''the Act''), an airport operator who has previously submitted a noise exposure map may submit to the FAA a noise compatibility program which sets forth the measures taken or proposed by the airport operator for the reduction of existing noncompatible land uses and prevention of additional noncompatible land uses within the area covered by the noise exposure maps. The Act requires such a program to be developed in consultation with interested and affected parties including the state, local communities, governmental agencies, airport users, and FAA personnel.

Each airport noise compatibility program developed in accordance with Federal Aviation Regulation (FAR) Part 150 is a local program, not a Federal program. The FAA does not substitute its judgement for that of the airport proprietor with respect to which measures should be recommended for action. The FAA's approval or disapproval for FAR Part 150 program recommendations is measured according to the standards expressed in Part 150 and the Act and is limited to the following determinations:

a. The noise compatibility program was developed in accordance with the provisions and procedures of FAR Part 150;

b. Program measures are reasonably consistent with achieving the goals of reducing existing noncompatible land uses around the airport and preventing the introduction of additional noncompatible land uses;

c. Program measures would not create an undue burden on interstate or foreign commerce, unjustly discriminate against types or classes of aeronautical uses, violate the terms of airport grant agreements, or intrude into areas preempted by the Federal Government; and

d. Program measures relating to the use of flight procedures can be implemented within the period covered by the program without derogating safety, adversely affecting the efficient use and management of the navigable airspace and air traffic control systems, or adversely affecting other powers and responsibilities of the Administrator prescribed by law.

Specific limitation with respect to FAA's approval of an airport noise compatibility program are delineated in FAR Part 150, Section 150.5. Approval is not a determination concerning the acceptability of land uses under Federal, state, or local law.

Approval does not by itself constitute an FAA implementing action. A request for Federal action or approval to implement specific noise compatibility measures may be required, and an FAA decision on the request may require an environmental assessment of the proposed action. Approval does not constitute a commitment by the FAA to financially assist in the implementation of the program nor a determination that all measures covered by the program are eligible for grant-in-aid funding from the FAA. Where Federal funding is sought, requests for project grants must be submitted to the FAA Airports District Office in Seattle, Washington.

The City of Boise submitted to the FAA the noise exposure maps, descriptions, and other documentation produced during the noise compatibility planning study conducted at the Boise Air Terminal. The Boise Air Terminal noise exposure maps were determined by FAA to be in compliance with applicable requirements on September 18, 1996. Notice of this determination was published in the **Federal Register** on September 26, 1996.

The Boise Air Terminal noise compatibility program contains a proposed noise compatibility program comprised of actions designed for phased implementation by airport management and adjacent jurisdictions from the date of study completion to the year 2000. It was requested that the FAA evaluate and approve this material as a noise compatibility program as described in Section 104(b) of the Act. The FAA began its review of the program on September 18, 1996, and was required by a provision of the Act to approve or disapprove the program within 180 days (other than the use of new flight procedures for noise control). Failure to approve or disapprove such program within the 180-day period shall be deemed to be an approval fo such program.

The submitted program contained 23 proposed actions for noise mitigation on and off the airport. The FAA completed its review and determined that the procedural and substantive requirements of the Act and FAR 150 have been satisfied. The overall program, therefore, was approved by the Associate Administrator for Airports effective March 17, 1997.

These determinations are set forth in detail in a Record of Approval endorsed by the Associate Administrator for Airports on March 17, 1997. The Record of Approval, as well as other evaluation materials and the documents comprising the submittal, are available for review at the FAA office listed above and at the administrative offices of the Boise Air Terminal.

Issued in Renton, Washington, on April 18, 1997.

**Lowell H. Johnson,**

*Manager, Airports Division, Northwest Mountain Region.*

[FR Doc. 97–11487 Filed 5–1–97; 8:45 am]

BILLING CODE 4910–13–M

---

## DEPARTMENT OF TRANSPORTATION

### Federal Highway Administration

**[FHWA Docket No. 97–2382]**

### Development of Performance Measures for the FHWA'S Strategic Plan

**AGENCY:** Federal Highway Administration (FHWA), (DOT).

**ACTION:** Notice; request for comments.

**SUMMARY:** In conformity with the Department of Transportation's (DOT) agency-wide strategic planning process, the FHWA is continuing to develop its strategic plan to guide its programs and initiatives to meet its part of the Department's strategic goals and objectives. The FHWA strategic plan will establish the framework, goals, and measures of progress in meeting its goals in fiscal year (FY) 1998 through FY 2003. The FHWA has developed vision, mission, and strategic goal statements and is now seeking input and advice from its partners and customers on how to best measure its progress toward those goals. The FHWA strategic plan will be finalized after the next reauthorization bill for the FHWA's programs is enacted. The FHWA strategic planning process will also support meeting the Department's requirements under the Government Performance and Results Act of 1993. Comments are requested to help guide the FHWA's development of performance objectives and indicators to measure the progress toward meeting the goals of the strategic plan.

**DATES:** Written comments must be submitted on or before July 1, 1997.

**ADDRESSES:** Submit written, signed comments to the docket number that appears in the heading of this document to the Docket Clerk, U.S. DOT Dockets, Room PL–401, 400 Seventh Street, SW., Washington, DC 20590–0001. All comments received will be available for examination at the above address between 10 a.m. and 5 p.m., e.t., Monday through Friday, except Federal holidays. Those persons or organizations who desire notification of receipt of comments must include a self-addressed, stamped envelope or postcard.

**FOR FURTHER INFORMATION CONTACT:** Ms. Susan B. Petty, HPP–20, Office of Policy Development, (202)366–0690, Federal Highway Administration, 400 Seventh Street, SW., Washington, DC 20590. Office hours are from 7:45 a.m. to 4:15 p.m., e.t., Monday through Friday, except Federal holidays.

### Background

The FHWA provides national leadership, expertise, resources, and information to ensure effective and efficient investment and management of highway transportation systems. The agency's main goals are to promote mobility, productivity, safety, human and natural environment, and national security. The FHWA also promotes innovations in financing, contracting, partnerships, and technologies to meet these goals. The FHWA strategic planning process will set-out the long-term programmatic, policy, and management goals of the FHWA including its planned accomplishments and its schedule for implementation of these goals. Further, consultation with the FHWA's customers and partners through the strategic planning process will help to ensure that the agency is meeting the needs and expectations of the public.

The FHWA has direct responsibility for a significant number of highway transportation programs such as Federal lands highways, commercial vehicle safety and enforcement, research, technology development, national standards, and technical assistance. In addition, it also has a significant role in influencing the strategic development of State and local transportation systems as effective and efficient elements of the national transportation system through programs, policies, and funding. Because of the FHWA's stewardship role of the national highway transportation system, its strategic goals and performance objectives and indicators reflect initiatives that are in

its span of influence but beyond its direct control. The FHWA strategic planning process reflects this broad scope of influence and the performance objectives and indicators developed through this process will indicate the performance of the highway transportation system nationwide. It is important to note that the performance objectives and indicators for the FHWA are developed to measure the performance of the entire highway transportation system nationwide. These objectives and indicators are not intended or appropriate to apply to individual States or jurisdictions.

The strategic plan is an integral part of the ongoing initiatives in the FHWA to improve the quality, effectiveness and efficiency of its programs. A strategic approach to managing its program and resources is not new to the FHWA—the FHWA's current strategic planning process builds on ongoing initiatives in quality, customer and partner feedback, and program evaluation. The FHWA ''Quality Journey'' provides the overarching principles and framework for the FHWA to create and support continuous quality improvements throughout its activities and strategic planning.

**Outreach for FHWA Strategic Planning**

As part of its overall strategic planning effort, the FHWA is engaging its customers and partners in the development and definition of objectives and indicators of performance. The FHWA gathered very useful information during the extensive outreach conducted last year in preparation for the reauthorization of the Intermodal Surface Transportation Efficiency Act of 1991 (ISTEA), Pub.L. 102–240, 105 Stat. 1914. This outreach included 13 regional forums and over 100 focus groups in approximately 40 States throughout the country. The information from these meetings provided valuable input for the FHWA's current strategic planning initiative. As the FHWA moves to the next step to develop performance objectives and indicators for its strategic plan, it is pursuing a number of methods to consult with its customers and partners. These include adding information on the FHWA home page on the Internet (http://www.fhwa.dot.gov), as well as requesting public comments through this **Federal Register** notice. In addition, the FHWA has written to more than 100 customer and partner groups to determine the level of participation that they would like to have in this process. While many will provide written comments, it is anticipated that the FHWA will also hold a number of focus group meetings on the various strategic goals. The FHWA plans to hold these focus group meetings between late April and June of this year.

**The FHWA'S Vision, Mission, and Strategic Goals**

In 1996, the FHWA took the initial steps for this strategic plan and approved its current Vision and Mission statements, Strategic Goals and Preamble. All of these were based on the 1994 DOT strategic plan, the reauthorization outreach process, and the previous strategic planning efforts. The following are the first elements of the FY 1998 to FY 2003 strategic plan for the FHWA:

*Preamble*

As a visionary and vigilant Federal Agency committed to fair and equitable treatment, the Federal Highway Administration will focus our investment of human, financial, and technological resources to make this Vision a reality and to undertake this Mission to meet the transportation challenges of today and tomorrow.

*Vision*

Create the best transportation system in the world for the American people through proactive leadership, innovation and excellence in service.

*Mission*

We provide proactive leadership, expertise, resources and information to continually improve the quality of our Nation's highway system and its intermodal connections. We undertake this mission in cooperation with all our partners to enhance the country's economic vitality, quality of life and the environment.

*Strategic Goals*

1. *Mobility:* Continually improve the public's access to activities, goods and services through preservation, improvement and expansion of the highway transportation system and enhancement of its operations, efficiency, and intermodal connections.

2. *Productivity:* Continuously improve the economic efficiency of the Nation's transportation system to enhance America's position in the global economy.

3. *Safety:* Continually decrease the number and severity of highway accidents.

4. *Human and natural environment:* Protect and enhance the natural environment and communities affected by highway transportation.

5. *National security:* Improve the Nation's ability to respond to emergencies and natural disasters and enhance national defense mobility.

**Performance Objectives and Indicators**

As the next step in its strategic planning process, the FHWA is requesting input for the development of performance objectives and indicators to measure its progress toward meeting its goals. The strategic plan will cover the period from FY 1998 through FY 2003 and these performance objectives and indicators will quantify the FHWA's accomplishments toward its goals for that period. The performance objectives and indicators in the strategic plan will focus on measuring the results or outcomes of initiatives and programs over this 6-year period. A ''performance objective'' is a measurable target level of results that is proposed to be accomplished toward a strategic goal. This could include, for example, increasing highway pavements and bridges that are in good condition, reducing highway crashes, or reducing the costs and time of highway freight movements. ''Performance indicators'' are the specific data that are used to measure the accomplishment. This could include, for example, the percentage of National Highway System (NHS) highways that are above a benchmark for serviceability ratings, a change in the rate of fatal accidents, or reducing the ton-mile cost of freight transportation.

To facilitate public comments on possible objectives and indicators to gauge progress toward the FHWA's strategic goals, the following questions are posed. The FHWA is not seeking answers to these specific questions, but offers them only as a starting point to assist commenters in preparing recommendations. Commenters are encouraged to expand on these questions in their deliberations. The basic question in each category, ''What will change as these goals begin to be met?'', will provide information for the FHWA's performance objectives. The follow-up question in each category, ''How can these changes best be measured?'', will help to develop specific, quantifiable performance indicators.

The FHWA anticipates that most of these goals could be measured by existing data or by combinations or indexes of existing data. However, the FHWA understands that some new data sources, such as, customer surveys may need to be developed. The FHWA is also requesting recommendations from commenters on appropriate sources of data that can be used for the performance indicators.

Another challenge in this process is to limit the number of measures in the agency's strategic plan to those that are the most important indicators of results. The experience of other agencies and organizations in setting performance objectives and indicators has demonstrated that using too many objectives and indicators may be confusing for program managers and partners and may diffuse the agency's focus on its strategic goals. Therefore, the FHWA is also requesting that commenters prioritize the performance objectives and indicators that they propose to assist the FHWA in selecting only the most critical indicators of performance.

An optional format is attached to this notice that may be helpful for commenters to use to provide recommendations. This format could be used for responses and suggestions on any of the strategic goals. The format provides a brief outline form for commenters to offer performance objectives and indicators, a ranking of priorities, and any possible sources of data for the performance indicators.

The following, lists the five strategic goals and a series of questions that may be of assistance to the commenters:

1. *Mobility:* Continually improve the public's access to activities, goods and services through preservation, improvement and expansion of the highway transportation system and enhancement of its operations, efficiency, and intermodal connections.

a. How does highway mobility benefit or affect individuals and community quality of life? How could this be quantified and measured? Should measures include commuting times, personal travel costs, public perception, or increased access to home, work, rural areas, and recreation?

b. What are the expectations of the general public for ease of access and mobility? How can these expectations be measured? Are highways and other transportation facilities expanded or built where and when they are needed? Are alternatives to highway transportation and intermodal facilities effectively developed to provide more transportation services to the public? Do national surveys provide a good indication of progress in this area?

c. It has been suggested that increasing the percentage of vehicle miles traveled on NHS highways that operate at ''full performance'' would increase mobility. How should full performance be measured, (i.e., traveling at a posted or design speed, good pavement conditions, reduced congestion, or others)? Should measures of full performance be linked to the public's exposure to adverse highway conditions such as vehicle miles traveled or the number of vehicles using highways and bridges that are below some benchmark?

d. Highway construction should result in highways that last longer, ride better, and cost less over the life of the highway. What specific measures would best capture these results?

e. How does the current condition of the highways impact mobility? Do factors, such as, measures of pavement and bridge conditions, construction delays, or lanes not in service relate to these impacts?

f. How will the application of new technologies affect highway mobility? How should the impacts or results of deploying new technologies be measured?

g. How does the operation of the highways affect mobility? Would measures of reducing delays from accidents and construction delays be an appropriate measure? How should the impacts on mobility of improved highway safety or directional signs and signals be measured?

h. What will be the impacts on mobility of deploying advanced technologies from Intelligent Transportation Systems, such as traveler information systems, incident management, and electronic toll collection? How can these results be measured?

2. *Productivity:* Continuously improve the economic efficiency of the Nation's transportation system to enhance America's position in the global economy.

a. What economic data and indicators would be directly affected by improvements in highway transportation?

b. Most products are moved on the highway at some point in the production process between gathering the raw materials and the final distribution to the consumer. What measurable factors would show improvements in this freight movement? Would an appropriate measure of improved highway freight movements include some measurement of cost such as reducing transportation costs?

c. How can technologies, such as, mapping, tracking, computerized signal control, and other Intelligent Transportation Systems improve productivity? How can the results of these improvements be measured?

d. What transportation factors are considered by the public, business community, freight movers, intermodal facility operators in making economic decisions? Would these factors be appropriate measures for this goal?

e. What factors indicate the efficiency of passenger and freight transportation across international highway borders? What are the best measures of how efficiently these crossings are operating?

f. How will the application of new technologies affect productivity? How should the impacts of new technologies be measured?

3. *Safety:* Continually decrease the number and severity of highway accidents.

a. Is the public satisfied with the level of safety on the highways? How does the public assess highway safety (e.g., crashes, deaths, personal perceptions, etc.)?

b. What are the best measures of improvements in safety? Should safety be measured by the number or rate of highway fatalities? How should crash severity be measured? Should it include all highway accidents, injury-only accidents, or solely the number of fatalities?

c. Would a comparison of fatal accidents to all accidents (or to injury-only accidents) indicate a change in the severity of accidents?

d. Highway safety issues of particular responsibility or concern for the FHWA include truck and bus safety, preventing run-off-the-road crashes, creating clear zones or forgiving highways, safety at railroad grade crossings, or construction work zones, as well as safety on certain high priority roadways, such as the National Highway System. How should improvements in these areas be measured? What would be appropriate measures to track progress in these safety areas?

e. How can the application of new technologies enhance highway safety? How should this be measured?

4. *Human and natural environment:* Protect and enhance the natural environment and communities affected by highway transportation.

a. What highway and transportation elements improve the community? What is the role of transportation in supporting welfare-to-work initiatives? Would decreases in commuting time or improving on-time travel or access to services be appropriate and measurable? How can the impacts and benefits to communities of highway transportation be measured?

b. How does highway access to National parks and Federal lands impact the human and natural environment? How can these benefits and impacts be measured? Would increased access to pedestrian facilities and bikeways or the number of miles of landscaped highways or the number of beautification programs be significant factors?

c. What are the changes in the environment when highways enhance the natural environment? How can these changes be measured? Would increasing the number or percentage of highway projects that accommodate or enhance environmental concerns be an adequate measure? Would decreasing the number or percentage of Americans living in air quality, non-attainment areas be an adequate measure? Should the number of acres of wetlands or the number of historic sites restored or avoided be a measure?

d. Do national and localized surveys of environmental partners and the general public on satisfaction with highways' impact on the environment provide useful information to measure accomplishments?

5. *National security:* Improve the Nation's ability to respond to emergencies and enhance national defense.

a. Following a natural disaster, quickly restoring the transportation system to minimal service, and then full service, is a key factor in rebuilding a community. Would appropriate measures of this goal be: (1) How long it takes to provide access to disaster areas for emergency relief?; (2) How long does it take to provide emergency funding following a disaster?; and (3) How long does it take to complete repairs of highways and bridges and restore full service following a disaster?

b. The FHWA provides direct service to the Department of Defense (DOD) to ensure highway access for national defense. In addition to working directly with DOD to establish its needs and measures, the FHWA would like comments from other partners and customers on this issue. For example, would increasing the percentage of highways designated for defense purposes that meet the requirements of DOD be an adequate measure? Would the number of highway movements by DOD that are on-time or the percentage of miles traveled by DOD that are on-time be good measures?

The following optional format is provided for commenters:

**The FHWA'S Strategic Planning Process: Optional Format for Comments on Performance Objectives and Indicators**

*This is an optional form offered to facilitate comments. Commenters are invited to provide recommendations on one or all of the five strategic goals (mobility, productivity, safety, human and natural environment, and national security). For each strategic goal on which comments are provided, please recommend performance objectives and performance indicators for that strategic goal. In addition, please prioritize the factors that are proposed and include any data sources that would be most appropriate.*

Name: _____

Date: _____

Organization: *(optional)* _____

Address: _____

_____

_____

Strategic Goal: _____

*(Mobility, Productivity, Safety, Human and Natural Resources, or National Security)*

*Performance Objectives:*

*Priority*

*(What should be accomplished to reach this goal?)*

*(1=highest/3=lowest)*_____

1. _____

_____

_____

*PERFORMANCE INDICATOR:*

*(How can these changes best be measured?)*

_____

_____

_____

*Possible source of data:*

_____

*Additional performance objectives and indicators for each strategic goal may be presented in the same format.*

**Authority:** 23 U.S.C. 315; 49 U.S.C. 322; 49 CFR 1.48.

Issued on: April 25, 1997.

**Jane Garvey,**

*Acting Federal Highway Administrator.*

[FR Doc. 97–11452 Filed 5–1–97; 8:45 am]

BILLING CODE 4910–22–P

---

## DEPARTMENT OF TRANSPORTATION

### Research and Special Programs Administration

**[Docket No. RSPA–97–2346; Notice 1]**

### Pipeline Safety: Liquefied Natural Gas Facilities Petition for Waiver; Northern Eclipse, Inc.

Northern Eclipse, Inc. (NE) has petitioned the Research and Special Programs Administration (RSPA) for a waiver from compliance with 49 CFR Part 193, Liquefied Natural Gas (LNG) Facilities: Federal Safety Standards. The petition applies to the Northern Eclipse's proposed Gas Treating and Liquefaction (GTL) unit to be located 20 miles north of Anchorage, Alaska. NE provides assurance that an equivalent level of safety will be achieved through compliance with alternative safety requirements for portable LNG facilities and, the siting requirements for liquefaction units. The alternative requirements are described in paragraph 2–3.4 of the National Fire Protection Association Standard (NFPA) 59A, Standard for Production, Storage, and Handling of Liquefied Natural Gas (1996).

The petitioner's rationale for the waiver rests on the following:

1. The NE GTL unit will be supplied with gas from the Beluga-Anchorage pipeline through a 2,500 foot, privately-owned service pipeline installed by NE downstream of the sales meter.

2. The NE GTL unit will have minimal LNG surge capacity, and there will be no storage at the NE GTL facility.

3. The NE GTL unit's output will be trucked from the GTL unit to end users, including one or more local distribution companies.

4. The NE GTL unit will not be used by the Beluga-Anchorage pipeline in any way to transport gas on their behalf.

5. DOT does not assert similar jurisdiction over liquefiers connected to the local distribution companies' (LDCs) that fuel motor vehicles. The GTL unit would fulfil essentially the same function.

6. The NE GTL unit will be no different from other consumers of gas. For example, chemical plants, power plants, and other end users are not regulated even though they are supplied with gas from a pipeline.

7. The NE GTL unit would be exempt under Section 193.2001(b)(2) because it would be a natural gas treatment facility without any storage.

8. The NE GTL unit will be a transportable unit mounted on skids.

In view of the above, NE alleges that an extension of Part 193 jurisdiction to the proposed facility would be inconsistent with the language and purpose of the regulation. However, NE proposes to ensure equivalent safety through compliance with the alternative safety provisions for portable LNG facilities as described in paragraph 2–3.4 of the NFPA 59A and with the siting requirements for liquefaction units.

The Research and Special Programs Administration (RSPA) considers the 2,500 foot, NE-installed gas pipeline supplying gas to the NE GTL facility (a large volume customer) a transmission line. Therefore, the gas line is subject to 49 CFR Part 192, *Transportation of Natural and Other Gas by Pipeline: Minimum Federal Safety Standards.* Recent revision of the definition of Transmission *pipeline in Section 192.3 (61 FR 28783; June 6, 1996) includes*

*pipelines transporting gas to a large volume customer.*

RSPA considers the proposed NE GTL facility to be subject to Part 193 regulation, because it receives gas from a Part 192 regulated pipeline. In general, Part 192 applies to the pipeline transportation of gas between producers and consumers. Although the LNG is transported by truck after liquefaction, RSPA believes that the NE GTL facility nonetheless is part of the overall operation of transporting gas, in this case from the Beluga-Anchorage transmission line to LDCs and other users at Fairbanks.

Because of the unusual features at the proposed NE GTL facility, including its remote location, lack of a storage tank, and skid-mounted transportable liquefaction unit, it poses low risk to public safety. Therefore, RSPA believes that granting a waiver from the requirements of 49 CFR Part 193 would not be inconsistent with pipeline safety, as long as the operator complies with alternative requirements for portable LNG facilities described in paragraph 2–3.4 of the NFPA Standard 59A and meets the siting requirements for the liquefaction unit. Therefore, RSPA proposes to grant the waiver.

Interested parties are invited to comment on the proposed waiver by submitting in duplicate such data, views, or arguments as they may desire. Comments should identify the docket number and the RSPA rulemaking number. Comments should be addressed to the Docket Facility, US Department Of Transportation, Plaza 401, 400 Seventh Street SW., Washington, DC 20590–0001.

All comments received before June 2, 1997 will be considered before final action is taken. Late filed comments will be considered so far as practicable. No public hearing is contemplated, but one may be held at a time and place set in a notice in the **Federal Register** if required by an interested person desiring to comment at a public hearing and raising a genuine issue. All comments and other docketed material will be available for inspection and copying in room Plaza 401 between the hours of 10:00 a.m. and 5 p.m., Monday through Friday, except Federal holidays.

**Authority:** 49 App. U.S.C. 2002(h) and 2015; and 49 CFR 1.53.

Issued in Washington, D.C. on April 29, 1997.

**Cesar DeLeon,**

*Deputy Associate Administrator for Pipeline Safety.*

[FR Doc. 97–11451 Filed 5–1–97; 8:45 am]

BILLING CODE 4910–60–P

# Corrections

**Federal Register**

Vol. 62, No. 85

Friday, May 2, 1997

This section of the FEDERAL REGISTER contains editorial corrections of previously published Presidential, Rule, Proposed Rule, and Notice documents. These corrections are prepared by the Office of the Federal Register. Agency prepared corrections are issued as signed documents and appear in the appropriate document categories elsewhere in the issue.

## DEPARTMENT OF ENERGY

### Federal Energy Regulatory Commission

**[Docket No. RP96-387-001]**

### Williams Natural Gas Company; Notice of Proposed Changes in FERC Gas Tariff

*Correction*

In notice document 97–10808 beginning on page 22924 in the issue of Monday, April 28, 1997, the docket number should read as set forth above.

**BILLING CODE 1505-01-D**

## DEPARTMENT OF THE INTERIOR

### Bureau of Land Management

**[WY–985–97–0777–00; WYW139860]**

### Notice of Realty Action: Wyoming

*Correction*

In notice document 97–5084, appearing on page 9446 in the issue of Monday, March 3, 1997, make the following correction:

On page 9446, in the third column, under **Sixth Principal Meridian**, the legal description should read as follows:

T. 40 N., R. 79 W.,
Sec. 25, SE¼SW¼NW¼, SW¼SE¼NW¼, NE¼NW¼SW¼, NW¼NE¼SW¼.
Containing 20 acres, more or less.

**BILLING CODE 1505-01-D**

## DEPARTMENT OF JUSTICE

### Antitrust Division

## FEDERAL TRADE COMMISSION

### Request for Comments on Proposed Agreement Between the Government of the United States of America and Government of Australia on Mutual Antitrust Enforcement Assistance

*Correction*

In notice document 97–10401 beginning on page 20022 in the issue of Thursday, April 24, 1997, make the following corrections:

1. On page 20023, in the third column, in paragraph H., in the ninth line, ''executive'' and ''execution''.

2. On page 20026, in the first column, in paragraph G., in the seventh line, ''Requested'' should read ''Requesting''.

3. On page 20027, in the third column, in the first full paragraph, in the fourth line, ''or oral'' should read ''of oral''. And in the 13th line, ''except'' should read ''exempt''.

4. On page 20028, in the second column, in the third paragraph, in the sixth line, ''identify'' should read ''identity''.

5. On the same page, in the same column, in the fifth paragraph, in the second line, ''property'' should read ''properly''.

6. On the same page, in the same column, in the italicized heading, ''*28 CFR 167.7*'' should read ''*28 CFR 16.7*''.

7. On page 20030, in the third column, in the third full paragraph, in the fourth line from the bottom, ''of existence'' should read ''or existence''.

**BILLING CODE 1505-01-D**

## LEGAL SERVICES CORPORATION

### 45 CFR Part 1626

### Restrictions on Legal Assistance to Aliens

*Correction*

In rule document 97–10035 beginning on page 19416 in the issue of Monday, April 21, 1997 make the following correction:

## PART 1626 [CORRECTED]

1. On page 19416, in the fourth column under Examples of acceptable documents:

a. The entry at lines number six and seven, the number ''3'' should be removed; and the line should read: ''*or* order granting residency or suspension or adjustment of status''

b. The entry at line seven should read: ''*or* I-327 Reentry Permit''

c. The entry beginning on line 13 should read: ''I-485 (application for adjustment of status on the basis of a family-based''

The table entry beginning on line 63 and ending on line 69 is corrected to read as follows:

ALIEN ELIGIBILITY FOR REPRESENTATION BY LSC PROGRAMS

| Alien category | Immigration Act (INA) | LSC Regs 45 CFR § 1626 | Examples of acceptable documents |
|---|---|---|---|
| ASYLEE ..... | INA § 208 8 USC § 1158 ..... | § 1626.5 (c) | I–94 or passport stamped ''asylee'' on ''§ 208''<br>*or* order granting asylum from INS, immigration judge, BIA, or federal court<br>*or* I–571 refugee travel document<br>*or* I–688B or I–766 coded 8 CFR § 274a.12(a) (5)(asylee)<br>*or* other computerized verification from INS or other authoritative document. |

**BILLING CODE 1505-01-D**

## SECURITIES AND EXCHANGE COMMISSION

### 17 CFR Part 230

**[Release Nos. 33-7399; IC-22529; File No. S7-18-96]**

**RIN 3235-AH03**

### Proposed New Disclosure Option for Open-End Management Investment Companies

*Correction*

In proposed rule document 97–5376 beginning on page 10943 in the issue of Monday, March 10, 1997 make the following corrections:

(1) On page 10946, in the first column, footnote [27] should read

[27] Proposed rule 498(c)(1). The cover page also would include the date of the profile. *See infra* note 84 and accompanying text regarding the proposed dating requirements. If the profile is distributed electronically or as part of another document (e.g., when the profile is printed in a magazine), rule 498 would require cover page information to appear at the beginning of the profile.

(2) On the same page, in the third column, footnote [33] should read:

[33] Proposed rule 498(c)(2)(i) (incorporating Item 2(a) of proposed Form N-1A). In providing this disclosure, a fund could refer to its investment objectives as investment goals.

(3) On page 10947, in the third column:

(a) Footnote [45] should read:

[45] The 1996 Profile Letter, *supra* note 9, at 2, requires a fund to disclose without further explanation that it is non-diversified.

(b) Footnote [46] should read:

[46] Proposed rule 498 (c)(2)(iii) (incorporating Item 2(c) of proposed Form N-1A).

(c) Footnote [47] should read:

[47] The 1996 Profile Letter, *supra* note 9, at 2-3, requires the bar chart and table to appear under a caption relating to a fund's past performance. To help investors use the information in the bar chart and table, the proposed rule would require a fund to explain how the information illustrates the fund's risks and performance. Item 2 of proposed Form N-1A would provide the following example of this explanation: This information illustrates the fund's risks and performance by showing changes in the fund's performance from year to year and by showing how the fund's average annual returns for one, five, and ten years compare to those of a broad measure of market performance. A fund also would be required to disclose that how the fund has performed in the past is not necessarily an indication of how the fund will perform in the future.

(d) Footnote [48] should read:

[48] *See* Risk Concept Release, *supra* note 5.

(4) On page 10948, in the first column, Footnote [51] should read:

[51] *See* 1996 Profile Letter, *supra* note 9, at 3 (permitting a fund, at its option, to compare its returns to those of an appropriate broad-based securities market index).

(5) On the same page, in the second column:

(a) Footnote [56] should read:

[56] Proposed rule 498(c)(2)(iv) (incorporating Item 3 of proposed Form N-1A). *See also* Item 2(a) of Form N-1A.

(b) Footnote [57] should read:

[57] *See* Form N-1A Release, *supra* note 1 (proposing amendments to improve fee table disclosure).

(6) On the same page, in the third column:

(a) ''Other Disclosure Requirements'' should read ''3. Other Disclosure Requirements''.

(b) Footnote [58] should read:

[58] Proposed rule 498(c)(2)(v). Consistent with Item 6(a)(2) of proposed Form N-1A, rule 498 would not require information about the portfolio manager of a money market fund or an index fund.

(c) Footnote [59] should read:

[59] *See also* ICI Survey Letter, *supra* note 10, at 9 (recommending that the profile include this information).

(d) Footnote [61] should read:

[61] The 1996 Profile Letter, *supra* note 9, at 3, permits a fund to disclose that 3 or more persons manage the fund's portfolio, without regard to the percentage of the portfolio managed by any one person.

(7) On page 10949, in the first column:

(a) Footnote [64] should read:

[64] Information about a fund's cash management practices generally would not be disclosed in the section of the profile that discusses the fund's main investment strategies. *See* Form N-1A Release, *supra* note 1 (prospectus disclosure would focus on a fund's principal strategies, which generally would not include the fund's cash management practices).

(b) Footnote [65] should read:

[65] *See* 1996 Profile Letter, *supra* note 9, at 3 (permitting a fund to provide disclosure to the effect that 3 or more sub-advisers manage the fund's portfolio without regard to the percentage of the portfolio managed by any one sub-adviser). To further limit the scope of this exception, a sub-adviser solely responsible for managing a fund's cash positions would not be counted in determining whether 3 or more sub-advisers manage the fund's portfolio.

(8) On the same page, in the second column footnote [66] should read:

[66] Proposed rule 498(c)(2)(vi), (vii).

(9) On the same page, in the third column:

(a) ''Application to Purchase Shares'' should read ''4. Application to Purchase Shares''.

(b) Footnote [69] should read:

[69] Proposed rule 498(c)(2)(viii). If a fund, as a result of its investment objectives or strategies, expects its distributions primarily to consist of ordinary income (or short-term capital gains that are taxed as ordinary income) or capital gains, the fund would be required to provide disclosure to that effect.

(10) On page 10950, in the first column ''Disclosure Safeguards'' should read ''C. Disclosure Safeguards''.

(11) On page 10952, in the first column:

(a) ''General Request for Comments'' should read ''III. General Request for Comments''.

(b) Footnote [98] should read

[98] Proposed rule 498(c)(4).

(12) On the same page, in the third column ''Summary of Initial Regulatory Flexibility Analysis'' should read ''V. Summary of Initial Regulatory Flexibility Analysis''.

**BILLING CODE 1505-01-D**

---

## SECURITIES AND EXCHANGE COMMISSION

### 17 CFR Parts 230, 239, 270, and 274

**[Release Nos. 33-7398; 34-38346; IC 22528; S7-10-97]**

**RIN 3235-AE46**

### Registration Form Used by Open-End Management Investment Companies

*Correction*

In proposed rule document 97–5368 beginning on page 10898, in the issue of Monday, March 10, 1997, make the following corrections:

1. On page 10899, in columns two and three, footnotes 12 and 13, the word ''Release')'' should read ''Release'')''.

2. On page 10900, in column one, in the fifth paragraph, in the sixth line, ''investors'' should read ''investors' ''.

3. On page 10901, in column one, footnote 25, in the sixth line, ''*supra* note.'' should read ''*supra* note 1.''

4. On page 10902, in column three, footnote 44, in the fourth line, ''*infra* notes- '' should read ''*infra* notes 109-112''.

5. On page 10903, in column one, footnote 47 should read ''[47] If applicable, a fund could indicate that its annual and semi-annual reports are available on its Internet site or by E-mail. In addition, a fund that provides its MDFP in the prospectus or a money market fund (which is not required to prepare a MDFP) would omit the second sentence of this disclosure.

Instruction 3 to proposed Item 2(b)(2) would require a fund to send, as applicable, the annual or semi-annual report within 3 business days of a request. The Commission views prompt delivery of the annual or semi-annual report or SAI to those investors who request it to be imperative to the goal of promoting effective communication about funds. The Commission's Office

of Compliance Inspections and Examinations would examine a fund's compliance with the 3-day mailing requirement, and the Commission would bring an enforcement action in an appropriate case for failing to comply with the requirement. *See also* Profile Release, *supra* note 1 (discussing the Commission's intention in connection with the profile initiative to monitor a fund's compliance with the proposed requirement to send the fund's prospectus within 3 days of a request).''

6. On page 10914, in column two, footnote 178 should read ''[178] See *supra* note 149.''

7. On page 10915, in column three, footnote 194 ''*supra* note'' should read ''*supra* note 2.''

8. On page 10916, in column one, in the fifth paragraph, in the l0th line ''(''NASD') '' should read ''(''NASD''). ''

9. On page 10922, in column three, the amendatory instruction under **''Part 230**'' should be designated as: ''1. The authority....., 2. Revise....., and 3. Amend.....''.

10. On page 10923, in column one, the amendatory instruction at the top of the page should be designated as: ''4. Amend.....''.

11. On the same page, in the same column, the amendatory instruction under **''Part 270**'' should be designated as: ''7. The authority.....''.

12. On page 10926, in column two, item 2 should read as follows:''*Item 2. Risk/Return Summary: Investments, Risks, and Performance*

Include the following information in the same order and in the same or substantially similar question-and-answer format:''.

BILLING CODE 1505-01-D

## SECURITIES AND EXCHANGE COMMISSION

### 17 CFR Part 270

**[Release No. IC-22530; File No. S7-11-97]**

**RIN: 3235-AH11**

### Investment Company Names

*Correction*

In proposed rule document 97–5375 beginning on page 10955 in the issue of Monday, March 10, 1997 make the following corrections:

(1) On page 10958, in the first column footnote [21] should read:

[21] *See ''The Scope of the US Mutual Fund Industry: Its Regulation and Industry Trends,''* Remarks by Isaac C. Hunt, Jr., Commissioner, SEC, before the Business Roundtable on ''The Development of the Russian Mutual (Unit) Fund Industry and Related Investment Opportunities'' at the General Consulate of the Russian Federation, New York, New York (Sept. 20, 1996) (discussing St. Petersburg Long Distance Telephone company, which is organized in Canada and whose securities are traded outside of Russia). *See also, e.g.,* rule 3b-4 under the Securities Exchange Act of 1934 [17 CFR 240.3b-4] (defining a ''foreign issuer'').

(2) On the same page, in the second column the two headings should read ''3. Tax-Exempt Investment Companies'' and ''4. Applying the 80% Investment Requirement''.

(3)On the same page, in the third column, in the second paragraph, in the eleventh line ''total assets'' should read ''*total assets*''.

(4) On page 10959, in the first column:

(a) Footnote [33] should read:

[33] Proposed rule 35d-1(b)(3). *See* Letter to Registrants at II.E (Feb. 25, 1994) (''1994 GCL''). See also Form N-1A Release, *supra* note 1 (proposing to require a fund to disclose, if applicable, certain information in its prospectus about the possibility of taking temporary defensive positions).

(b) Footnote [34] should read:

[34] Many investment companies have the flexibility to assume temporary defensive positions and depart from investment policies unrelated to their names. *See* 1994 GCL, *supra* note 33 (noting that investment companies may depart from a policy to concentrate in a particular industry or group of industries to avoid losses in response to adverse market, economic, political, or other conditions).

(5) On the same page, in the third column, ''In General'' should read ''1. In General''.

(6) On page 10960, in the first column, footnote [40] should read:

[40] *See* In re Alliance North Am. Gov't Income Trust, Inc. Securities Litigation, No. 95 Civ. 0330 (LLM), 1996 U.S. Dist. LEXIS 14209, at *8 (S.D.N.Y. Sept. 27, 1996); The Private Investment Fund for Governmental Personnel, Inc., 37 S.E.C. 484, 487-88 (1957). The 80% investment requirement generally would apply to a company's investment focus as disclosed in the company's prospectus. The Commission, however, recognizes that the 80% investment requirement would not be appropriate in all cases (e.g., with respect to an investment company that uses the word ''balanced'' in its name).

In connection with the proposed amendments to Form N-1A, information about the organization and operations of investment companies and Division interpretive positions is proposed to be incorporated in a new ''Investment Company Registration Package,'' which would be prepared by the Division. See Form N-1A Release, *supra* note 1. The Investment Company Registration Package would include general guidance about avoiding the use of a name that is the same as or similar to the name of another investment company and about names that a reasonable investor may conclude suggest more than one investment focus including, for example, use of names that include the terms ''small, mid, or large capitalization.''

(7) On the same page, in the second column, footnote [41] should read

[41] The term ''bond,'' by itself, does not imply that the security has a particular maturity. *See also* 1994 GCL, *supra* note 33, at III.A (indicating that a fund should describe in its prospectus what it considers to be a ''bond'').

BILLING CODE 1505-01-D

federal register

Friday
May 2, 1997

# Part II

# Department of Energy

## Office of Energy Efficiency and Renewable Energy

## 10 CFR Part 435

## Energy Efficiency Code For New Federal Residential Buildings; Proposed Rule

## DEPARTMENT OF ENERGY

### Office of Energy Efficiency and Renewable Energy

### 10 CFR Part 435

**[Docket No. EE–RM–96–300]**

**RIN 1904–AA53**

## Energy Efficiency Code for New Federal Residential Buildings

**AGENCY:** Office of Energy Efficiency and Renewable Energy, DOE.

**ACTION:** Notice of proposed rulemaking, public hearing, and request for public comment.

**SUMMARY:** The Department of Energy today proposes a rule that would establish minimum energy-efficiency building standards for new Federal residential buildings, including single-family and multi-family low-rise housing, pursuant to the requirements of the Energy Conservation and Production Act of 1976, as amended. The proposed rule would cover all aspects of residential building thermal envelopes, including foundations, crawl spaces, floors, walls, fenestration, roof/ceilings, and attics. The proposed rule would also cover the heating, ventilation, and air-conditioning systems design, service water heating systems, radon control, air infiltration, and electrical power and lighting systems. The proposed rule would revise the current Federal residential standards to conform generally with the format and language of the Council of American Building Officials Model Energy Code, 1992. The proposed rule is, on the average, 11 percent more energy-efficient than the Model Energy Code, 1992 for single-family residences and 26 percent more energy-efficient than the Model Energy Code, 1992 for multi-family residences for heating and cooling.

**DATES:** Written comments on the proposed rule (ten copies and, if possible, a computer disk containing the electronic file of these comments) must be received on or before July 14, 1997. A public hearing will be held in Washington, D.C., on June 5, 1997, beginning at 9:30 a.m. at the address listed below. Requests to speak must be received by the Department on or before June 3, 1997. Ten copies of the statement to be given at the public hearing must be received by the Department by 4:00 p.m., June 3, 1997.

**ADDRESSES:** Written comments on the proposed rule (ten copies), as well as requests to speak at the public hearing, requests for copies of the technical support documents and requests for speaker lists should be addressed to: U.S. Department of Energy, Energy Efficiency Code for Federal Residential Buildings, Docket Number EE-RM–96–300, Office of Codes and Standards, Office of Energy Efficiency and Renewable Energy, U.S. Department of Energy, Room 1J–018, 1000 Independence Avenue, S.W., Washington, D.C. 20585–0121, (202) 586–7574.

*Fax comments will not be accepted.* The public hearing will be held at the U.S. Department of Energy, Forrestal Building, Room 1E–245, 1000 Independence Avenue, S.W., Washington D.C. 20585–0121. Copies of the transcripts of the public hearings and written public comments received may be read at the Department of Energy's Freedom of Information Reading Room, U.S. Department of Energy, Forrestal Building, Room 1E–190, 1000 Independence Avenue, S.W., Washington, D.C. 20585–0121, (202) 586–6020, between the hours of 9:00 a.m. and 4:00 p.m., Monday through Friday, except Federal holidays. The reference standards are also available from the sources listed in Subpart H of the proposed rule. For more information concerning public participation see section IX. Public Comment Procedures.

**FOR FURTHER INFORMATION CONTACT:**

Stephen P. Walder, Office of Codes and Standards, EE–43, U.S. Department of Energy, Office of Energy Efficiency and Renewable Energy, Room 1J–018, 1000 Independence Avenue, S.W., Washington, D.C. 20585–0121, (202) 586–9209;

Francine B. Pinto, Esq., Office of General Counsel, GC–72, U.S. Department of Energy, Room 6E–042, 1000 Independence Avenue, S.W., Washington, D.C. 20585–0103, (202) 586–7432.

**SUPPLEMENTARY INFORMATION:**

I. Introduction

A. Authority
B. Background
1. Model Energy Code, 1992
2. The Current Federal Standards
3. Standard 90.2–1993

II. Relationship Between the Proposed Rule, the MEC, 1992, the Current Federal Residential Standards, Standard 90.2–1993, and Other Federal Initiatives

A. General
B. Relationship Between the Proposed Rule and the MEC, 1992
C. Relationship Between the Proposed Rule and the Current Federal Residential Standards
D. Relationship Between the Proposed Rule and Standard 90.2–1993
E. Relationship to Other Federal Initiatives

III. Description of the Proposed Rule and Differences Between the Proposed Rule and the Model Energy Code, 1992

A. Subpart A: Administration and Enforcement
1. Sections 435.102.1.2 and 435.102.1.3: Building Envelope Insulation and Insulation Installation
2. Section 435.102.3: Fenestration Product Rating, Certification, and Labeling
3. Section 435.104: [Reserved]
4. Section 435.105: [Reserved]
5. Section 435.106: [Reserved]
6. Section 435.107: Precedence
7. Section 435.108: Life-Cycle Cost Analysis
B. Subpart B: Definitions
C. Subpart C: Design Conditions
D. Subpart D: Design by Systems Analysis; Design Utilizing Renewable Energy Sources
1. Section 435.402.1: Energy Analysis
2. Section 435.402.1.1: Input Values/Assumptions for Group R (Single Family and Multi-family Low Rise) Buildings
3. Section 435.403.3: Passive Solar Design Analysis
E. Subpart E: Design by Component Performance Approach
1. Major Revisions from the Model Energy Code, 1992 that are Contained in Subpart E of the Proposed Rule
a. Section 435.502: Building Thermal Envelope Requirements
b. Section 435.502.2.1.1.2: Metal Framing
c. Section 435.502.2.1.5: Crawl Space Walls
d. Section 435.502.3.3: Recessed Lighting Fixtures
e. Section 435.503.2: Mechanical Equipment Efficiency
f. Section 435.503.3.1.1: Heating and Cooling Equipment Capacity
g. Section 435.503.5.7.2: Duct Sealing
h. Section 435.503.5.9.1: Backdrafting Test
i. Section 435.504.2: Service Water Heating Equipment
j. Section 435.504.4: Heat Traps
2. Miscellaneous Revisions that are Contained in Subpart E of the Proposed Rule, Not in the MEC, 1992
F. Subpart F: [Reserved]
G. Subpart G: Radon Control
H. Subpart H: Standards

IV. Consultation

V. Energy and Economic Impacts

VI. Technological Feasibility and Economic Justification

VII. Measures Concerning Radon and Other Indoor Air Pollutants

VIII. Findings and Certification

A. Review Under the National Environmental Policy Act
B. Environmental Protection Agency Review
C. Regulatory Planning and Review
D. Federalism Review
E. Review Under Executive Order on Metric Usage in Federal Government Programs
F. Review Under Executive Order on Civil Justice Reform
G. Review Under the Regulatory Flexibility Act
H. Paperwork Reduction Act Review

I. Review Under Section 32 of the Federal Energy Administration Authorization Act
J. Unfunded Mandates Reform Act Review
IX. Public Comment Procedures
A. Participation in Rulemaking
B. Solicitation of Public Comments
C. Written Comment Procedures
D. Public Hearings
1. Procedure for Submitting Requests to Speak
2. Conduct of Hearings

## I. Introduction

### *A. Authority*

The Department today proposes a rule that would establish Federal building energy-efficiency standards for new Federal residential buildings pursuant to section 305(a) of the Energy Conservation and Production Act (ECPA), as amended by the Energy Policy Act of 1992 (EPACT), 42 U.S.C. 6834(a). In developing this proposed rule, the Department is directed to consult with other Federal agencies as well as private and state associations and other appropriate persons.

Section 305(a)(1) of the ECPA requires the Department to establish Federal building energy standards that include those energy-efficiency measures that are technologically feasible and economically justified. The standards must contain energy saving and renewable energy specifications that meet or exceed the energy saving and renewable energy specifications of the Council of American Building Officials (CABO) Model Energy Code (MEC), 1992. Section 305(a)(2)(A).

Section 305(a)(2)(B) requires that to the extent practicable, the proposed standards use the same format as the appropriate voluntary building energy code, in this case, the MEC, 1992. Furthermore, Section 305(a)(2)(C) requires that the proposed rule be established in consultation with the Environmental Protection Agency (EPA) and other Federal agencies and, where appropriate, contain measures with regard to radon and other indoor air pollutants.

The current energy performance standards for new Federal buildings remain in effect until the standards established under subsection (a) become effective. Section 305(d). These current standards are found in 10 CFR Part 435, Subpart C.

Section 306 addresses Federal compliance. Each Federal agency and the Architect of the Capitol must adopt procedures to assure that new Federal buildings will meet or exceed the Federal building energy standards proposed here. Section 306(a). Section 306(b) bars the head of a Federal agency from expending Federal funds for the construction of a new Federal building unless the building meets or exceeds the appropriate Federal building energy standards established under Section 305.

### *B. Background*

There are currently three building energy codes that address low-rise residential buildings in all parts of the United States [1]: the Model Energy Code (MEC); 10 CFR Part 435, Subpart C, *Mandatory Performance Standards for New Federal Residential Buildings*; and the American Society of Heating, Refrigerating and Air Conditioning Engineers (ASHRAE), Inc., Standard 90.2–1993, *Energy-Efficient Design of New Low-Rise Residential Buildings*. All three bear on today's proposed rule. The MEC contributes format, substance, and technical improvements to the proposal. The Federal residential standards first introduced the concept of cost-effectiveness in building standards and tools to analyze the economic justification of energy-efficiency requirements in building standards. Tools that evolved from the development of the current Federal residential standards were used to determine the economic justification for the requirements contained in the proposed rule. ASHRAE Standard 90.2–1993 also provides substantive technical improvements to the proposal.

#### 1. Model Energy Code, 1992

Currently, the MEC is the most widely accepted and used residential energy-efficiency code in the United States. Seventeen states have adopted the MEC, or modified versions of the MEC, as their energy code. Approximately 20 percent of new home loans are issued or guaranteed by the Department of Housing and Urban Development, the Department of Veterans Affairs, and the Rural Economic and Community Development group of the Department of Agriculture. Such loans or loan guarantees require compliance with the MEC, 1992. The MEC has been promulgated jointly by the three model code organizations: the Building Officials and Code Administrators International; the International Conference of Building Officials; and the Southern Building Code Congress International under the auspices of the Council of American Building Officials. The MEC is provided as a model and intended for adoption by state and local jurisdictions.

The provisions of the MEC, 1992 regulate the design of building envelopes for adequate thermal resistance and low air leakage and the design and selection of mechanical, electrical, service water-heating and illumination systems and equipment which will enable effective use of energy in new building construction. The MEC provides flexibility to permit the use of innovative approaches and techniques to achieve efficient utilization of energy. These provisions are structured to permit compliance with the intent of the code by any one of the following paths of design: (1) A systems analysis approach for the entire residential building and its energy-using subsystems, including buildings which utilize renewable sources (Chapter 4), (2) a building design by component performance approach (Chapter 5) and, (3) building design by acceptable practice (Chapter 6).

#### 2. The Current Federal Standards

On August 25, 1988, the Department published standards for new Federal residential buildings (53 FR 32536). It established building energy-efficiency standards for the design and construction of Federal residential buildings.

The current Federal standards require that Federal agencies use software to create project-specific compliance forms that are then completed by prospective builders to demonstrate compliance with minimum energy-efficiency requirements. The process must be undertaken for each project. The micro-computer software program, *Conservation Optimization Standard for Savings in Federal Residences* (COSTSAFR), uses local construction, maintenance and replacement costs, local climate data, and local fuel costs to determine an energy-efficient and cost-effective energy usage goal for any of nine residential building unit types addressed in the COSTSAFR program data base. COSTSAFR calculates project-specific minimum energy-efficiency requirements and presents these requirements in compliance forms known as ''the point system.'' The use of COSTSAFR eliminated the need for performing lengthy calculations or making uninformed choices regarding the selection of energy-efficiency measures. COSTSAFR is designed so that implementing officials, designers, and builders can easily tell if a proposed combination of measures will result in energy-efficiency levels that meet or

[1] There are other building energy codes that are state-specific or regional that are not considered.

exceed the COSTSAFR required level for cost-effective energy-efficiency in a building.

The Department decided not to use COSTSAFR as the basis for this new Federal proposed rule because it cannot always be assured of complying with the new legislative requirements. In particular, COSTSAFR can generate energy-efficiency requirements that do not meet the MEC, 1992 energy-efficient levels specified by EPACT. The software would have to be reconfigured to eliminate this possibility.

3. Standard 90.2–1993

Standard 90.2–1993, *Energy-Efficient Design of New Low-Rise Residential Buildings,* is a standard for residential construction published by the American Society of Heating, Refrigerating and Air Conditioning Engineers (ASHRAE), Inc. Standard 90.2–1993 is the next generation residential component of ASHRAE's earlier Standard 90 (1975) and Standard 90A–1980, which specified design requirements for energy-efficient commercial and residential buildings. Standard 90.2–1993 sets criteria for the building envelope, heating equipment and systems, air-conditioning and systems, and provisions for overall building design alternatives and trade-offs.

## II. Relationship Between the Proposed Rule, the MEC, 1992, the Current Federal Residential Standards, Standard 90.2–1993, and Other Federal Initiatives

### *A. General*

The Department has decided to develop a proposed rule similar in format to the MEC rather than modify the current Federal residential building standards. Currently, construction professionals are more familiar with the MEC, 1992 format and content than the Federal standards. This familiarity with the MEC requirements and format is likely to reduce costs associated with the development and use of building specifications consistent with those of the MEC. The consistency of the proposed rule with industry-wide practice will facilitate implementation by Federal agencies of the final rule. Currently, 10 CFR Part 435 contains standards for Federal commercial buildings (Subpart A), a reserved section that was intended for voluntary standards for new non-Federal residential buildings (Subpart B), and standards for Federal residential buildings (Subpart C). On August 6, 1996, the Department proposed to remove Subpart A from Part 435 and republish it as a new Part 434 in the Code of Federal Regulations. (61 FR 40882). In today's proposed rule, Subparts B and C would be removed and Part 435 would be revised to establish standards for Federal residential buildings only.

### *B. Relationship Between the Proposed Rule and the MEC, 1992*

The proposed rule would adopt portions of the Model Energy Code, 1992 verbatim. There are, however, some requirements in the proposed rule that exceed the MEC, 1992 resulting in increased energy-efficiency. Many of the provisions improving energy-efficiency are found in the 1993 and 1995 versions or the 1994 amendments to the MEC, 1993. Those aspects of the proposed rule that exceed the MEC, 1992 resulting in increased energy-efficiency are: (1) more stringent thermal envelope requirements, (2) insulating of crawl space walls, (3) sealing recessed light fixtures, (4) heating and cooling equipment capacity requirements, (5) air distribution system construction, and (6) heat traps.

The proposed rule would also make revisions to the Model Energy Code, 1992, that are consistent with current building construction practice. These include requirements for: (1) insulation inspection, (2) window and door thermal performance ratings, (3) improved performance path specifications, (4) metal framing construction and, (5) radon and other indoor air pollutants. The requirements referenced in (1)–(4) above, do not save energy but help ensure that energy savings are achieved. Requirements concerning radon and other indoor air pollutants are consistent with health and safety needs.

Further, the Department has made miscellaneous minor changes to the MEC, 1992 to improve the clarity and useability of the rule. These miscellaneous changes are not expected to have any impact on the agencies or their contractors.

The proposed rule is on the average, 11 percent more energy-efficient than the Model Energy Code, 1992 for single-family residences and 26 percent more energy-efficient than the Model Energy Code, 1992 for multi-family residences for heating and cooling.

### *C. Relationship Between the Proposed Rule and the Current Federal Residential Standards*

There are significant differences and similarities between the proposed rule and the current standards. The current standards have a point system related to energy cost that permits tradeoffs among energy-efficiency measures, while the proposed rule has an overall U-value that permits tradeoffs in envelope measures. The use of microcomputer software is necessary to determine the requirements of the current standards, whereas, the requirements of the proposed rule are contained in a hardcopy publication. Both have a similar whole building energy usage analysis compliance approach.

The current Federal standards will not always assure the user of meeting or exceeding the requirements of the MEC, 1992. The Department has demonstrated that residential buildings designed using COSTSAFR will have a less stringent level of thermal performance than those buildings designed using the requirements of the proposed rule.

### *D. Relationship Between the Proposed Rule and Standard 90.2–1993*

A number of features from Standard 90.2–1993 are included in today's proposed rule. These provisions address feasible residential design features not presently or adequately addressed by the MEC, while providing the potential for further energy savings in the proposed rule. They include heating and cooling equipment sizing limitations; default thermal performance data for metal frame walls; and heat traps on water heaters for potable water.

Standard 90.2–1993 has been put into code format providing a similar structure for both the standard and the proposed rule. Both also have three alternative compliance paths of similar nature. Standard 90.2–1993 however, has more complexity than the respective compliance options of the proposed rule. The Department believes that this greater complexity of Standard 90.2–1993 would make it more difficult to adopt, use, and enforce than the MEC, which is the basis for the proposed rule. The Department also believes that the complexity and differences between Standard 90.2–1993 and the MEC would have made it difficult for the Department to have assured the user of meeting the minimum energy-efficiency requirements of the MEC, 1992. The Department determined that the necessary cost and resources to revise Standard 90.2–1993 as the proposed Federal residential rule and that would meet or exceed the MEC, 1992 would not be warranted. The proposed rule looks to the broad recognition and penetration enjoyed by the MEC within the community of residential designers, builders and enforcement officials to facilitate its implementation by the Federal sector.

*E. Relationship to Other Federal Initiatives*

The proposed rule would establish the minimum level of energy-efficiency for new Federal buildings. The rule works in conjunction with two related Federal initiatives designed to encourage cost-effective efficiency improvements for new buildings beyond the minimum requirements of the proposed rule. First, *Executive Order on Energy Efficiency and Water Conservation at Federal Facilities,* Executive Order No. 12902 (59 FR 11463, March 8, 1994), specifically requires that, ''Each agency involved in the construction of a new facility—shall: (1) design and construct such facility to minimize the life cycle cost of the facility by utilizing energy efficiency, water conservation, or solar or other renewable energy technologies.'' Section 306(a) of Executive Order 12902. It also requires agencies to ''ensure that the design and construction of facilities meet or exceed the energy performance standards applicable to Federal residential or commercial buildings as set forth in 10 CFR Part 435, local building standards, or a Btu-per-gross square-foot ceiling—whichever will result in a lower life cycle cost over the life of the facility.'' Section 306(a)(2) of Executive Order 12902. In addition, Federal agencies shall increase, to the extent practicable and cost-effective, purchases of products that are in the upper 25 percent of energy efficiency for all similar products, or products that are at least 10 percent more efficient than the minimum level that meets Federal standards. Section 507(a)(2) of Executive Order 12902. This latter provision is being implemented through the Department's ''Procurement Challenge Program'' that notifies Federal agencies of the availability and performance of these high-efficiency options. This ''Procurement Challenge Program'' is being coordinated with the EPA ''Energy Star'' product specification activities. In addition, the Department's Office of Building Technologies, State and Community Programs provides detailed technical information on state-of-the-art energy-efficiency equipment for new buildings. These sources of technical assistance can help Federal agencies specify highly-efficient equipment for new Federal residential buildings.

Second, section 435.108 of today's proposed rule references the requirements of 10 CFR Part 436 governing life-cycle cost analysis for Federal energy investments. The life-cycle cost analysis provisions found in 10 CFR Part 436 allow agencies to determine when additional or alternate energy-efficiency measures would provide net benefits in the form of energy cost savings to ensure that measures selected are cost-effective to the Federal government. This is especially relevant in areas where energy costs are higher than presumed for the analysis supporting today's proposal, and for innovative technologies and specifications that cannot be readily incorporated into the proposed rule. The microcomputer program entitled ''ARES'' (Automated Residential Energy Standard) can be used for evaluating the life-cycle cost-effectiveness of various thermal envelope energy-efficiency measures (EEMs) that can be more energy-efficient than the requirements of the proposed rule. The Department is currently conducting life-cycle cost analysis that would identify energy-efficiency measures that are economically justified in specified circumstances and exceed the minimum requirements of the proposed rule. The Department will provide the results of this analysis to the Federal agencies to assist them in the design and construction of energy-efficient Federal residential buildings.

## III. Description of the Proposed Rule and Differences Between the Proposed Rule and the Model Energy Code, 1992

This section describes the proposed rule and the differences between the proposed rule and the Model Energy Code, 1992. Those sections of the proposed rule not specifically addressed here have been adopted from the MEC, 1992. Minor language and citation changes will not be noted. The discussion below corresponds to the subparts, sections, paragraphs, and subparagraphs in the proposed rule. The sections identified as reserved are discussed briefly.

*A. Subpart A: Administration and Enforcement*

This subpart describes the scope and general requirements of the rule, the requirements concerning the identification and maintenance information on building materials and equipment, the use of alternate materials, the application of the proposed rule if sections are in conflict, and the requirement for a life-cycle cost analysis.

Proposed sections 435.101–108 contain changes from the MEC, 1992, as discussed below. The Department believes that the provisions discussed below are technologically feasible, and are of such minimal cost that the benefits of such requirements make them economically justified.

1. Sections 435.102.1.2 and 435.102.1.3: Building Envelope Insulation and Insulation Installation

The sections require that insulation installed in the building be clearly marked so that the ''R-value'' of the insulation can be easily verified. The blown or sprayed attic insulation ''depth'' marker requirement is contained in the MEC, 1995 but not in the MEC, 1992. The insulation depth markers will help ensure that the claimed thickness of the loose-fill ceiling insulation can be verified. Verification of the ceiling insulation assures that the designed energy-efficiency performance of the building ceiling can be achieved at a minimal cost to the government. The associated costs are minimal compared to the possibility of installing insulation that is less than the required designed thickness and thereby loses energy. The use of depth markers is technologically feasible because a marker is a simple ruler graduated in one-inch increments and affixed to the roof/ceiling framing.

2. Section 435.102.3: Fenestration Product Rating, Certification, and Labeling

Section 121 of EPACT requires the Secretary of Energy to make a determination, within one year of enactment, on whether a window energy rating and labeling program established by the National Fenestration Rating Council (NFRC) meets the objectives of the legislation. If not, the Department is to develop a mandatory rating program. The Secretary's provisional determination concluded that the NFRC voluntary national window rating program meets the requirements of EPACT. (September 23, 1994, 59 FR 48865, 48868). The Department supports the NFRC efforts to establish a uniform, national rating, certification and labeling program through incorporation of the NFRC program in Federal, state and local government and national voluntary codes and standards.

The verification of window and door assembly U-values is a significant element in determining the overall U-value or thermal performance of the building envelope, which is a key factor in achieving compliance with the proposed rule. Section 435.102.3 of the proposed rule requires that when Federal agencies purchase fenestration products, the U-value (conductive heat transfer) for that fenestration product (window, door, and skylight) shall be assigned. If the product has been tested in accordance with NFRC 100–91 (Procedure for Determining Fenestration

Product Thermal Properties), the NFRC U-value shall be used. The rating procedure tests the fenestration products to determine the conductive heat transfer properties and/or characteristics of the product.

If fenestration products are not tested in accordance with NFRC 100–91, a default U-value will be assigned, using Tables 102.3.1 and 102.3.2 located in the Appendix of the proposed rule. The default values represent a conservative energy-efficiency performance potential of a product based on characteristics of the product which are verifiable by visual inspection. The NFRC 100–91 rating procedure and the default U-value tables for non-tested products in the proposed rule are those found in the MEC, 1995.

There is no standard for rating the energy-efficiency (U-values) of window and door assemblies in the MEC, 1992. The inclusion of the requirement to assign U-values to fenestration products will potentially save energy costs by eliminating inaccurate U-values or ratings that do not reflect the total window or door assembly thermal performance. Thus assigning U-values or default U-values helps to ensure that the claimed thermal performance of fenestration products will actually be achieved in housing construction.

The NFRC procedure provides a fair and accurate rating of window and door thermal performance. Over 22,000 products have been rated by the NFRC. The ratings of window and door thermal performance are recognized by at least six states in their building code provisions regarding energy-efficiency.

Windows and doors that are rated in accordance with NFRC 100–91 may result in an expenditure by the product manufacturer. However, NFRC 100–91 is set up so that every window or door unit need not be tested individually. The results of a few actual tests are extrapolated by computer modeling to the manufacturer's entire product line. Thus the per unit cost of receiving a NFRC rating is relatively small. Alternatively, a fenestration product manufacturer can elect not to test and save the associated costs, and receive the default U-value rating.

Assigning a U-value according to the new rating procedure can change the rating received by particular windows. A model that was previously rated at 0.4 might, for example, be rated under the new system at 0.5. As a result, there may be situations in which agencies would change the window selected in order to keep with the code's U-value requirements. That change could result in higher purchase prices, but would reduce building energy use as well. The use of energy-efficient windows is becoming standard building construction practice in most regions of the nation, particularly in the northern tier states, indicating their general cost-effectiveness in today's building markets. Given the nominal cost per unit for NFRC testing and rating and the general cost-effectiveness of energy-efficient windows, the Department has determined that the assigning of U-values in accordance with NFRC 100–91 or default U-values in the proposed rule is economically justified. See the Technical Support Document, section 6.7, page 6.6.

3. Section 435.104: [Reserved]

The proposed rule does not include the section entitled, ''Plans and Specifications'' from the MEC, 1992.

4. Section 435.105: [Reserved]

The MEC, 1992 has requirements concerning the inspection by the building official of construction or work for which a building permit is required. Federal agencies have various procedures concerning the inspection of construction. Section 435.105 is reserved in the proposed rule to allow Federal agencies the flexibility of using their own requirements concerning the inspection of residential construction.

5. Section 435.106: [Reserved]

The proposed rule does not include the section entitled, ''Validity'' from the MEC, 1992.

6. Section 435.107: Precedence

The Model Energy Code, 1992 contains no statement addressing the order of precedence between potentially conflicting requirements of the proposed code and those of a reference standard. Section 435.107.1 of the proposed rule clarifies which requirements that shall apply.

7. Section 435.108: Life-Cycle Cost Analysis

The MEC, 1992 contains no requirements related to life-cycle costs. The proposed rule would require building design(s) of Federal residential buildings to be evaluated consistent with Subpart A of 10 CFR Part 436, which specifies methodologies and procedures for life-cycle cost analyses of Federal buildings.

*B. Subpart B: Definitions*

This subpart includes definitions for all relevant words or phrases that have a specific meaning within the context of the rule. In accordance with the proposed rule, new definitions not in the MEC, 1992 have been added and unneeded definitions have been removed. For example, definitions related to the radon control requirements have been added and definitions related to non-residential HVAC systems and components not regulated by this rule have been deleted. Appendix D in the Technical Support Document identifies those definitions that have been added or removed.

*C. Subpart C: Design Conditions*

This subpart gives sources for heating and cooling degree-day data, establishes design conditions for the sizing of the heating, ventilating, and air-conditioning system, and provides reference standards for mechanical ventilation criteria. Other than identifying cooling degree-days and providing more specific information on where one may obtain weather data, this section is unchanged from the MEC, 1992.

*D. Subpart D: Design by Systems Analysis; Design Utilizing Renewable Energy Sources*

This subpart contains a compliance approach that may be used as an alternative to Subpart E. Subpart E contains the minimum energy-efficiency requirements for the thermal performance of new Federal residential buildings.

Subpart D requires that the user conduct an annual energy analysis. It defines the general methodology and rules for this energy comparison. A proposed building complies with this rule if its calculated annual energy usage is less than or equal to the energy usage of a similar building (referred to as the ''standard design'') designed in accordance with Subpart E. The annual energy analysis methodology is equivalent to that in Chapter 4 of MEC, 1992 but provides more direction and specific detail on how the annual energy analysis shall be conducted, as discussed below.

1. Section 435.402.1: Energy Analysis

A critical parameter for performing any comparative energy analysis is defining the space heating, air conditioning, and service water heating equipment and the efficiency or performance levels of that equipment for the ''standard'' design.

As in the MEC, 1992, the proposed rule would require that the standard and the proposed design be compared utilizing the ''same energy source(s) for the same functions.'' These energy sources are determined by the Subpart E provisions governing the selection of equipment. This energy consumption provision is similar to the provision in

section 402.1 contained in the MEC, 1992 and 1993. The only substantive difference between the proposed rule and the earlier versions of the MEC that relate to this section is the application of life-cycle cost requirements.

In order to comply with Subpart D, a proposed design must be at least as life-cycle cost-effective as the standard design and use no more energy than the standard design. In the event that the proposed design utilizes more than one energy source and increases the consumption of one energy source and decreases the consumption of the other energy source, then the overall energy consumption, measured at the site, must be less than or equal to the standard design. Because the energy sources in the standard and proposed design must be the same, changes in energy consumption that affect more than one energy source would be limited to variations in equipment efficiency and types and building thermal envelope efficiencies.

Because methods for consistently measuring and comparing the energy performance of new technologies take time to develop, the proposed design may utilize newer equipment types not covered using current Department test procedures. The Department is requesting comment on methods of addressing newer equipment technologies for which a recognized means of evaluating and comparing energy performance have not yet been fully developed.

2. Section 435.402.1.1: Input Values/Assumptions for Group R (Single-Family and Multi-family Low Rise) Buildings

This proposed rule specifies input values/assumptions for certain energy-related building parameters that must be used in the whole building energy analysis comparison. These values were taken from the MEC, 1995. In contrast, the MEC, 1992 does not provide specification of these values. For example, if the builder or designer chooses to use the annual energy analysis approach, the thermostat set points that must be assumed are given in Table 402.1.1–4, whereas the MEC, 1992 provides no information.

The specification of input values/assumptions performs two functions. First, it eliminates the time and effort that each user needs to set these values/assumptions individually. Second, it establishes ground rules that ensure consistency among different whole building annual energy analyses and helps prevent misuse of this approach.

The Department has determined that specifying the input values/assumptions to annual energy analyses comparisons is technologically feasible because it is consistent with current building energy usage analysis practice and is the only way to verify consistency in analytical results across the different analytical tools. The specification of input values is also economically justified since failure to specify such input values could result in the approval of noncomplying or unrealistic building designs and unnecessary energy cost increases. The introduction of erroneous data would add unwarranted time, effort, and cost to the project.

The Department has included many new annual energy analysis input values/assumptions in the proposed rule. *See* the Technical Support Document, section 6.8, page 6.8.

3. Section 435.403.3: Passive Solar Design Analysis

The MEC, 1992 and 1995 do not include direction on methodologies for measuring the energy impacts of solar space conditioning. This section of the proposed rule allows for the optional use of ''BuilderGuide,'' a software program that calculates heating and cooling loads for solar technologies. ''BuilderGuide'' was produced by the Department in partnership with the Passive Solar Industries Council and the National Renewable Energy Laboratory. The resulting ''BuilderGuide'' package is specific to some 2400 United States locations, and uses a methodology that is based on 15 years of solar energy research. The Department has determined that ''BuilderGuide'' is a well developed, widely distributed and recognized software program. Other reliable tools for calculating energy usage of solar technologies or other new energy-efficiency measures can be used. The Department recognizes that designs using renewable energy sources for space conditioning or water heating may be economically justified. The Department is promoting ways to further stimulate the use of renewable sources of energy. The Department welcomes additional suggestions on approaches for crediting measures that use renewable sources of energy.

*E. Subpart E: Design by Component Performance Approach*

Sections 435.501–505 contain the minimum energy-efficiency requirements for the thermal performance of building envelope components, building mechanical systems and equipment, service water heating, and electrical power and lighting. Compliance with the requirements of Subpart E is required unless the optional compliance approach prescribed in Subpart D is used.

The building envelope requirements apply to the building components enclosing conditioned space, including: roof/ceilings, above grade walls, slab-on-grade floors, floors over unconditioned spaces, basement walls, crawl space walls, doors, windows, and skylights. The proposed rule also contains requirements limiting air infiltration through the building envelope.

The mechanical systems and equipment performance requirements set heating and cooling equipment load capacity (sizing) limits, temperature and humidity control requirements, distribution system construction and insulation requirements, and backdrafting testing requirements. The requirements relating to electrical power and lighting systems apply only to multi-family residences. The mechanical equipment section does not require mechanical equipment efficiencies that exceed current Federal minimum standards.

Sections 435.501–505 of the proposed rule in Subpart E revise and update the requirements contained in Chapter 5 of the MEC, 1992. Subpart E contains two separate building envelope compliance approaches. The two approaches are: (1) The individual component performance approach and, (2) the whole building performance approach. The individual component performance approach (section 435.502.2.1) gives maximum $U_0$[2] requirements for the floor over unheated spaces, wall, and roof/ceiling. The different elements of the wall (insulation, windows, doors, opaque wall), the floor (insulation, type of floor), or the roof/ceiling (insulation, skylights, type of ceiling) may be varied to achieve the $U_0$. The whole building performance approach (section 435.502.2.2) defines the maximum $U_0$ requirement for the entire building. The user can then tradeoff among the requirements for the walls, floors, and roof/ceilings as long as the maximum $U_0$ for the entire building is not exceeded.

1. Major Revisions From the Model Energy Code, 1992 That Are Contained in Subpart E of the Proposed Rule

The major substantive changes from the MEC, 1992 as found in Subpart E are described below.

a. Section 435.502: Building thermal envelope requirements. The tables

[2] $U_0$ = the area-weighted average thermal transmittance of an area of the building envelope; i.e., the exterior wall assembly including fenestration and doors, the roof and ceiling assembly, and the floor assembly (British thermal unit/(hour x square feet x degrees Fahrenheit).

found in proposed section 435.502, and Figures 1 through 6 in the Appendix contain the building thermal envelope requirements. These requirements are significantly changed from the MEC, 1992 and generally are more stringent than the MEC, 1992, except for the requirements for crawl space walls which are essentially the same as those in the MEC, 1992. The requirements that are more stringent than the MEC, 1992 consist of maximum $U_0$-values for above-grade walls including windows and doors, roof/ceilings, floors over unheated spaces, basement walls, and minimum R-values for slab-on-grade perimeters. When describing the thermal performance of a building component, consider that the lower a $U_0$-value, the more energy-efficient the component and the higher a R-value, the more energy-efficient the component.

The Department conducted a life-cycle cost economic analysis, as specified at 10 CFR Part 436, to analyze these thermal envelope requirements so as to minimize life-cycle costs to the Federal government. The assessment was conducted using the ARES computer software analyzing information such as the average Federal cost of energy, expected energy price increases, and typical costs for installation and maintenance of proposed measures. The economic analysis considered construction-related costs and space heating and cooling energy costs for 881 cities and eight types of common heating fuel/equipment types. *See* the Technical Support Document (chapters 2 thru 5) for a detailed description of the analysis to establish the building thermal envelope requirements.

b. Section 435.502.2.1.1.2: Metal framing. The proposed rule includes a detailed new table (Appendix Table 502.2.1.1.2) to provide users with the correction factors for the thermal-performance values of wall assemblies framed with metal studs. Table 502.2.1.1.2 does not appear in the MEC, 1992 but is in the MEC, 1995 and Standard 90.2–1993. This table provides a standardized treatment of heat loss through walls framed with metal studs. The thermal performance requirements of such walls are the same as those for wood-framed walls. Metal framing is technologically feasible. Metal wall assemblies have become more popular over the last several years due in part to the price increase of wood. Metal framing is not required by the rule and need not be specified where not cost-effective or otherwise not preferred.

c. Section 435.502.2.1.5: Crawl space walls. Section 435.502.2.1.5 of the proposed rule requires floors above crawl spaces vented to outdoors to be insulated. This requirement is contained in the MEC, 1995, but is not in the MEC, 1992. In the MEC, 1992 insulating the crawl space wall was not dependent on whether the crawl space was ventilated. Wall insulation for vented crawl spaces is ineffective because outside air will enter the crawl space through the vents. Increased energy usage results from the uninsulated heat transfer path through the floor above. Crawl space wall insulation in the proposed rule is an option only if the crawl space is not vented. The Department has determined that the insulation of floors over vented crawl spaces is technologically feasible since it is part of current standard building construction practice.

Further, the requirement is economically justified. *See* the Technical Support Document, section 6.3, page 6.2.

d. Section 435.502.3.3: Recessed lighting fixtures. Recessed lighting fixtures, when installed in the building envelope, must be properly sealed to prevent unwanted ceiling air leakage. The requirement is contained in the MEC, 1995. Without this requirement, recessed lighting fixtures can be a significant source of energy loss due to air leakage into the attic space. The MEC, 1992 has no requirements relating specifically to recessed lighting fixtures.

The Department has determined that the insulation and sealing of recessed lighting fixtures are technologically feasible. These practices are used in current building construction practice. The requirement is economically justified because the incremental cost for installing well-sealed recessed light fixtures is less than the cost of the energy that would otherwise be lost over the 25-year analysis period. *See* the Technical Support Document, section 6.6, page 6.5.

e. Section 435.503.2: Mechanical equipment efficiency. Section 435.503.2 addresses the selection of heating and cooling equipment with attention to the use of life-cycle cost principles. The primary difference between the MEC, 1992 and the proposed rule regarding this section is that the proposed rule includes provisions addressing the life-cycle cost of the installed equipment. The MEC, 1992 has no requirements concerning life-cycle cost principles. In the proposed rule when selecting among equipment options that are minimally compliant with Federal performance standards, that option with the lowest life-cycle cost is to be selected. The proposed rule allows for the selection of equipment that exceeds Federal minimum efficiency standards under Subpart E providing the equipment is at least as life-cycle cost effective as equipment that is minimally compliant with Federal standards. Agencies are encouraged through the Procurement Challenge program and other Federal initiatives to consider more energy-efficient equipment.

Given the large range of heating and cooling equipment types and efficiencies available, this section provides a simplified method for incorporating life-cycle cost principles into equipment selection. Two options are provided for: the first option requires Federal agencies to select the most cost-effective equipment that is minimally compliant with Federal standards. For central heating and cooling equipment systems for multi family dwellings that service multiple rather than individual dwelling units, minimum equipment efficiencies found in the codified version of ASHRAE Standard 90.1–1989 are used. This approach is consistent with the overall rule, which sets building envelope efficiency requirements at a level that is cost-effective on average when equipment at minimum Federal efficiency levels is used. The second option allows for the use of any other equipment available, provided that it is at least as cost-effective as the heating and cooling equipment identified under the first option. This second option allows for the use of more efficient versions of equipment that are subject to minimum Federal standards and would allow use of equipment, such as natural gas heat pumps or ground source heat pumps, that are not covered by the Federal standards.

It is anticipated that for most buildings, an informal comparison of local costs and fuel availability will identify a few systems as the most likely to be the most cost-effective; these systems can then be compared in more detail to identify the system that has the lowest life-cycle cost under the first option. If any other equipment is preferred, a single additional calculation will establish whether it is more cost-effective than the system identified in the first option.

f. Section 435.503.3.1.1: Heating and cooling equipment capacity. The Department has included limits on equipment capacities in section 435.503.3.1.1 of the proposed rule. These requirements are taken from the codified version of Standard 90.2–1993. The MEC, 1992 has no requirements relating to the sizing of heating and cooling equipment. Oversizing of heating and cooling equipment results in increased energy usage since the equipment cycles on and off more frequently and, therefore, runs at a

lower average efficiency than properly sized equipment. Furthermore, oversized cooling equipment is less able to remove moisture from the air and, therefore, is less able to control humidity. Also, oversized heating, ventilating, and air-conditioning equipment also generally costs more to purchase than properly sized equipment. The Department believes that the requirement is technologically feasible and economically justified based on the discussion above. *See* the Technical Support Document, section 6.2, page 6.2. However, in very well insulated homes, equipment sizing could be such that the smallest available size of intended equipment might not meet the proposed sizing requirement. The Department would appreciate comments on what designers should do if unable to obtain equipment within the equipment capacity requirements.

g. Section 435.503.5.7.2: Duct sealing. The proposed rule would contain duct sealing requirements that are more stringent than those in the MEC, 1992. A requirement that all low-pressure air ducts be sealed with mastic with fibrous backing tape was added as section 435.503.5.7.2 of the proposed rule. This requirement is also in the MEC, 1995.

Leaking supply and return ducts decrease heating and cooling equipment efficiency and increase energy usage while not meeting resident comfort requirements. Many studies of actual houses have revealed leaky ducts to be a major source of energy loss. One study showed leaks of 15 percent can reduce air conditioner efficiency by 33—50 percent. *See* the Technical Support Document, section 6.4, page 6.4. To address these problems, the proposed rule requires all low-pressure supply and return ducts outside the conditioned space to be sealed with mastic with fibrous backing tape. In contrast, the MEC, 1992 requires only that the supply ducts are sealed and allows any type of tape.

Current construction practice allows the use of duct tape to ''seal'' cracks and crevices in supply and return air ducts. Duct tape however, is not a sealant. A clean surface and a tight fit are required to produce a ''seal'' at installation and neither of these conditions is routinely met. If a ''seal'' is obtained at installation, however, the tape degrades over time as a result of deterioration of the glue. Properly installed duct tape ''seals'' often will leak within a year or two. Repairing leaking ducts after construction can be costly or impractical because ducts are often in inaccessible locations or they are wrapped with insulation that must be removed and replaced.

Mastic is a permanent sealant. It does not degrade over time, and is expected to last for the life of the home. Installation is uncomplicated, with several methods of application from which to choose. Mastic has excellent adhesive and cohesive properties, even on typically dirty or oily surfaces found at the construction site. The cost of sealing ducts in existing housing is estimated to range from $50 to $300 when the installer has unrestricted access to the ducts without making it necessary to remove the finished material that may cover the ducts. The cost will clearly be lower during construction in new housing. This requirement is technologically feasible because mastic and tape sealing are found in current building construction practice. The requirement is economically justified because the cost of the energy saved over the 25-year analysis period would exceed the cost of the additional labor and materials that would be used to comply with this section. *See* the Technical Support Document, section 6.4, page 6.4.

h. Section 435.503.5.9.1: Backdrafting test. The Department has included requirements relating to the prevention of backdrafting of fossil-fuel-burning appliances in the proposed rule. The MEC, 1992 has no requirements relating to this potential health hazard. Chimney backdrafting in fossil-fuel-burning appliances such as oil or gas-fired water heaters, gas-fired clothes driers, fireplaces, or wood stoves is a potential threat to occupant health in residential buildings. Chimney backdrafting can occur when exhaust gases are drawn into a building through the chimney or vent because air pressure is lower inside the building than outside. Chimney backdrafting can cause serious health problems and even death can occur from exhaust gases containing or leading to the formation of carbon monoxide. Infants are particularly at risk because their respiratory systems are not fully developed, and they are susceptible to health effects at lower concentrations than are safe for most healthy adults. Sulfur dioxide and carbon dioxide also circulates in occupant breathing spaces as a result of backdrafting. These gases can cause long-term health effects such as chronic respiratory illness, or short-term health effects such as discomfort, shortness of breath, and respiratory irritation.

The Department has determined that tests for potential backdraft problems should be performed in all homes with fossil-fuel-burning appliances that do not obtain exhaust combustion air directly from the outside. These tests shall be performed because the potential for chimney or venting failure exists in all homes and especially in all well sealed, poorly ventilated homes with combustion equipment. Tight building envelopes can cause stack-effect-induced depressurization and powered exhaust fans can exacerbate the problem.

The test specified in the proposed rule is taken from the Canadian spillage test developed by the Canadian General Standards Board. The test measures the inside/outside pressure differential across a building shell with a micromanometer under best-case and worst-case scenarios. The test then compares the measurements to depressurization limits for combustion appliances in the house. When depressurization measurements exceed limits, remedial action is required before the house can pass the spillage test and comply with the rule. The Department has reviewed the Canadian spillage test and determined that it is technologically feasible and has included it in the proposed rule. *See* Technical Support Document, section 8.0, page 8.1.

The cost to perform a backdrafting test is estimated to be between $50 and $100, depending on factors such as: the complexity of the house, the number of houses in a given area to be tested, and local weather conditions. This cost range does not include remedial measures. The Department has determined that there is a potential risk of backdrafting which justifies the inclusion of this requirement which is consistent with health and safety needs. *See* the Technical Support Document, section 8.0 for more information. The Department requests the public to comment on whether carbon monoxide alarms should be required in Federal residences.

i. Section 435.504.2: Service water heating equipment. Section 435.504.2 addresses the selection of service water heating equipment with the application of life-cycle cost requirements. As with space heating and cooling equipment, Federal agencies may either (1) select the most cost-effective domestic water heating equipment that minimally complies with Federal standards or (2) select any other equipment that is at least as life-cycle cost-effective. More efficient equipment may be selected under Subpart E. Agencies are encouraged through the Procurement Challenge program and other Federal initiatives to consider more energy-efficient equipment.

j. Section 435.504.4: Heat traps. Heat traps are one-way valves or pipe configurations that prevent thermal diffusion or thermal siphoning of

potable water from the hot water heater in the house through the water distribution system, thus needlessly dissipating heat. Section 435.504.4 of the proposed rule requires that water heaters with vertical pipe risers have heat traps. This requirement is not in the MEC, 1992 and was taken from the codified version of Standard 90.2–1993. Heat traps are also technologically feasible because they are part of current water heater manufacturing practice. The use of heat traps is a low-cost method of reducing water heating energy use already installed on many commercially available water heaters. Therefore, heat traps are economically justified because the net annual savings over the lifetime of the water heater exceeds the initial first cost of the additional hardware. *See* the Technical Support Document, section 6.5, page 6.5.

2. Miscellaneous Revisions That Are Contained in Subpart E of the Proposed Rule, Not in the MEC, 1992

The proposed rule includes the following additional requirements that are not part of the MEC, 1992. Section 435.502.1.4 contains a clarification to the MEC, 1992 in that access openings, which are considered part of the thermal envelope element, must be evaluated as part of the overall building thermal envelope element (e.g., floors, walls, roof/ceiling, etc.,). The Department believes this is technologically feasible because access openings are commonly insulated in colder climates and are economically justified because it imposes no additional cost to the building. *See* the Technical Support Document, section 6.9, page 6.10.

Section 435.502.1.5 contains a requirement for the insulation of foundations supporting masonry veneer. The Department has determined that the requirement is technologically feasible because it reflects current building construction practice. Although some energy would be lost, the energy loss would be small and economically justified when weighed against the costs that would be incurred by damage to the masonry veneer. Damage can occur due to settling of the masonry as the insulation is compressed. The technical justification for this requirement may be found in the Technical Support Document, section 6.10, page 6.10.

Section 435.502.2.1.3 contains an equation to calculate the total floor heat loss of the proposed building. The equation requires that all floors of different construction (in aggregate) must meet the $U_0$ requirements for floors over unheated spaces. The Department has determined that the requirement is technologically feasible. The technical justification for this requirement may be found in the Technical Support Document, section 6.11, page 6.10. The equation is economically justified because the use of the equation to determine the U-value requirement for floors over unheated spaces is cost-effective. Variations in floor configurations are not required by this proposed rule.

Section 435.502.2.1.4 contains a clarification of acceptable slab insulation placement which reflects current building construction practice. The Department has determined that the requirement is technologically feasible because it reflects current standard building construction practice. The technical justification for this requirement may be found in the Technical Support Document, section 6.11, page 6.11. The clarification is economically justified because it imposes no additional slab insulation requirements. There is a potential for installation cost savings due to the flexibility offered by the proposed requirement.

Section 435.502.3.2 simplifies language on caulking and sealing requirements for typical air sealing measures. The Department has determined that the requirement is technologically feasible because the simplified language generally reflects the requirements contained in the MEC, 1992. The technical justification for this requirement may be found in the Technical Support Document, section 6.13, page 6.12. The simplified language is economically justified because it imposes no additional costs to the construction of the building.

Section 435.502.3.1 refers to updated reference standards for allowable infiltration rates for windows and doors. This section reflects current manufacturing standards for air-tightness of pre-fabricated windows and doors. The Department has determined that the requirement is technologically feasible because current manufactured windows and doors are built to the updated referenced standards. The updated reference standards are economically justified because the proposed rule imposes no additional cost or requirements on manufacturing quality or performance. The technical justification for this requirement may be found in the Technical Support Document, section 6.15, page 6.14.

*F. Subpart F: [ Reserved ]*

Subpart F is reserved for a simplified compliance approach the Department is developing. This approach will make it easier to determine compliance with this rule. This revised simplified compliance approach would be different from that contained in the MEC, 1992, 1993, and 1995. This approach is expected to be similar to the Department's ''MECcheck'' tables which display pre-calculated configurations in compliance with the MEC, 1992, 1993 or 1995. The Department is planning to produce a ''Federal'' version of MECcheck.

*G. Subpart G: Radon Control*

Subpart G provides the minimum requirements for the control of radon from the ground and from construction materials associated with Federal residential buildings. The application of requirements for radon control apply in addition to the provisions of Subpart D or E.

The ECPA, as amended, directs that the Federal residential building energy standard ''consider, in consultation with the Environmental Protection Agency and other Federal agencies, and where appropriate contain, measures with regard to radon and other indoor air pollutants.'' 42 U.S.C. 6834(a)(2)(C). The intent is for the Department to address health concerns related to air quality in Federal buildings.

The Department has determined that radon is a potential health hazard in residential buildings and that the proposed rule should address radon testing and mitigation requirements. Radon is a gas that exists naturally in many soils and enters a building through the foundation. Radon concentrations in soil vary widely across the United States and even within a small region, such as a county. If high concentrations of radon are present in the soil below a building, then measures to control radon are needed. Approximately 6 percent of existing single-family homes in the United States or 5.8 million homes in 1990 have average radon levels greater than 4 pCi/L per year, the threshold level determined by the EPA to require corrective action. Approximately 0.7 percent of existing single-family homes in the country have average radon levels greater than 10 pCi/L per year. The EPA estimates that indoor radon causes between 7,000 and 30,000 lung cancer deaths per year. This range is based on the uncertainty inherent in the many factors contributing to the risk of radon exposure and on a national residential radon survey estimate of an average level of 1.25 pCi/L per year. The EPA's best estimate is that 14,000 lung cancer deaths per year result from residential radon exposure.

In this proposed rule the Department would be accepting EPA's determination that radon-resistance control measures should only be required in zones (counties) of high radon potential. Such zones are defined by the EPA ''U.S. Map of Radon Zones'' or local data if available. The proposed rule specifies the EPA ''U.S. Map of Radon Zones'' as the default source designating counties where the proposed requirements apply. Table 702.2 in the Appendix of the proposed rule lists the applicable counties. The EPA ''U.S. Map of Radon Zones'' is not always sufficient to predict radon concentrations accurately. There may be instances where specific locations will be assigned to an inappropriate radon potential zone in the EPA ''U.S. Map of Radon Zones''. To accommodate for such inaccuracies, the proposed rule allows considering appropriate evidence and ''overruling'' the EPA ''U.S. Map of Radon Zones.''

Consideration of non-EPA data is justifiable given that studies on radon concentrations in many Federal installations are already available or are underway.

The proposed rule uses the following approach for addressing radon when radon-resistant construction is necessary:

(1) Foundation sealing with passive (non-mechanical) venting of soil gas to the outside;

(2) Long-term and short-term post-occupancy radon testing to verify occupant safety;

(3) Mitigation, if the tests reveal high radon concentrations; and

(4) Post-mitigation testing for radon and potential backdrafting to ensure safety.

Each of these four approaches is described in further detail below. The proposed radon requirements are technologically feasible because the techniques used are part of current standard building construction practice in many areas of the U.S. and are consistent with the EPA *Model Standards and Techniques for Control of Radon in New Residential Buildings* (EPA 402–R–94–009, March 1994). The Department is accepting EPA's analysis of the costs and benefits of radon control. See RS–34, pages ES–1–ES–4. The Technical Support Document (Chapter 7.0) provides construction specifications and technical justifications for the proposed rule. The proper initial abatement approach in areas of potentially high radon concentrations is to seal potential sources of air leakage in the foundation and vent the soil gas below the foundation. Such venting uses a pipe that extends from the foundation, through the house, and out the roof. This approach is consistent with the approach in the EPA *Radon Mitigation Standards* (EPA 402–R–93–078, October 1993). It cannot be conclusively determined before construction that a radon source exists that is strong enough to raise indoor concentrations above the EPA action level. Therefore, it would be fiscally imprudent initially to require measures beyond foundation sealing and the ''passive'' vent pipe. If elevated radon levels are found after construction and these initial measures were not installed, the cost of the retrofit would be much higher than the cost during initial construction.

The radon concentration within a residence can only be determined after the residence is built and occupied. This is due to the interaction of radon sources with construction characteristics of the house and the indoor pressure-driven air flow that is influenced by heating, ventilating and air-conditioning equipment under occupant control. Because short-term tests are not adequate to obtain annual average radon concentrations, the proposed rule requires long-term post-occupancy testing of residences built in specified locations. The long-term test requires between 6 months and 1 year and is the most accurate measure of chronic radon levels an occupant will encounter. A short-term test which lasts between seven and 60 days, is also proposed to ensure that occupants are not exposed to radon levels in excess of 20 pCi/L while the long-term test is in progress. Testing procedures and devices must conform to the EPA *Protocols for Radon and Radon Decay Measurements in Homes* (EPA 402–R–93–003, June 1993).

Testing may show that sealing the foundation and installing the passive vent are not sufficient to control the radon level. In such cases, the proposed rule requires that a fan be installed and operated in the foundation vent system to lower radon concentrations. Vent fans must be activated when the long-term test reveals radon concentrations greater than the EPA action level of 4 pCi/L or if the first short-term test and a second short-term confirmatory test reveals radon levels in excess of 20 pCi/L. The EPA *Radon Mitigation Standards* offer guidance on installing the fan.

Follow-up tests are required to ensure that the vent fan is successful at lowering indoor radon levels. Additionally, because the foundation vent fan may under certain circumstances cause fossil-fuel-burning appliances to tend to backdraft, both the proposed rule and the EPA *Radon Mitigation Standards* require testing for backdrafting of chimney and combustion vents. Section 435.503.5.9.1 of the proposed rule, referenced in Subpart G, specifies the test procedure to be used to check for potential backdrafting.

The Department departs from the EPA ''Radon Mitigation Standards'' in several respects. First, the proposed rule allows data on radon concentrations at Federal facilities to take precedence over the EPA ''U.S. Map of Radon Zones'' for determining whether radon-resistant construction is required. Second, if the housing is located in a high radon zone, the proposed rule requires testing and, if necessary, mitigation and further post mitigation testing. Third, many sections of the EPA *Radon Mitigation Standards* that are unenforceable, including discussions, explanations, or recommendations, have been deleted. Fourth, the Department provides more detail in some construction specifications so that the required measures can be more easily verified. Fifth, the Department did not explicitly include the EPA requirements for sealing the above-grade structure to help limit air infiltration through the foundation. This was because similar requirements are already included in section 435.502.3 of the proposed rule.

The Department has thus followed the general approach outlined in the EPA *Radon Mitigation Standards*. Radon-resistant construction is only required in locations with high radon potential and a phased approach to control is specified. Control should be based on a sealed foundation, passive venting of soil gas and radon testing after occupancy. Only if necessary should a fan be added to the vent system. The Department consulted and provided to the EPA draft copies of the proposed rule (including radon requirements) and the Environmental Assessment supporting the proposed rule. The EPA has provided extensive comments on the requirements for radon in the proposed rule and the Department has incorporated many of those comments in Subpart G.

*H. Subpart H: Standards*

This section provides a list of all the standards referenced in the proposed rule. This section has been updated from the MEC, 1992 because some requirements contained in this proposed rule are not contained in the MEC, 1992 reference standards. Also, some referenced standards have been updated to newer versions since 1992.

## IV. Consultation

In developing today's proposal, the Department has consulted with outside parties, including state and local code officials, private sector representatives, and other Federal agencies, as required by section 305(a)(1) of ECPA.

In addition, the Department continues to work with the relevant private sector organizations and the states to analyze potential improvements to the MEC and to facilitate the adoption of such improvements in both the public and private sectors. Adoption of the MEC format in today's proposal provides a ready basis for the incorporation of future code improvements as they are developed and approved through the standard process for model code change proposals.

Finally, the Department will specifically provide Federal agencies with information regarding the availability of energy-efficiency equipment and emerging developments that improve building envelopes. This support will help keep Federal agencies current regarding energy-efficiency opportunities between the updates of this rule.

## V. Energy and Economic Impacts

Section 305(a)(2)(A) of ECPA requires that the proposed rule meet or exceed the MEC, 1992. The proposed rule is based on the MEC, 1992, with the additions described in Section III above. Overall, the proposed rule, if adopted would reduce energy use by approximately 11 percent for single-family residences and 26 percent for multi-family residences, as compared to the MEC, 1992.

The energy estimates reported here are based on the minimum specifications required in Subpart E of the proposed rule. Additional cost-effective energy-efficiency improvements in new Federal residential buildings are facilitated by this rule through Subpart D, which provides a means of documenting the energy savings and cost-effectiveness of more energy-efficient building designs.

The Department has prepared a Technical Support Document that includes an economic analysis. It concludes that there are no significant adverse economic effects from adopting the proposed rule. The proposed rule, when compared to the MEC, 1992, will result in a positive net flow of benefits from energy savings that more than offsets higher capital construction and other costs at estimated Federal costs of energy.

The national net effect of the proposed rule is a cumulative savings of $870,000 for the approximately 3,000 Federal housing units constructed each year. These net effects are based on the net present value of energy savings and capital costs over a 25-year period. *See* the Economic Analysis at page 6.

## VI. Technological Feasibility and Economic Justification

The standards proposed today are technologically feasible and economically justified to the Federal government as required by Section 305(a)(1) of ECPA.

The Department used the life-cycle cost methodology reflected in the microcomputer program entitled ''ARES'' for evaluating the life-cycle cost-effectiveness of various thermal envelope EEMs. Only those EEMs the Department judged technologically feasible were reviewed.

The life-cycle cost analysis compares the cost and benefits of all the EEMs. The HVAC equipment performance efficiencies are specified at current minimum EPCA levels. *See* 10 CFR Part 430. These are the same levels found in the MEC, 1993. Given a set of fuel prices, financial and economic parameters, and EEM costs for a specific location, ARES identifies the life-cycle cost resulting from any given set of EEMs. Energy costs and discount rates reflect estimated Federal costs of energy and the Federal discount rate established annually by the Federal Energy Management Program for the life-cycle cost analysis required by 10 CFR Part 436. The present value of the total costs for several EEMs are compared, and the results are used to set the code to energy-efficiency measure levels that achieve the lowest energy-related total cost for construction, operation and maintenance for each location studied. The resulting thermal-envelope-component values are presented as a function of heating degree-days.

The technical feasibility of the EEMs contained in the ARES energy data base was assessed by determining that they were technologically verifiable, commercially available, and in common construction practice. Construction features that cannot be analyzed by ARES because the technical or economic data has not been well established, or features that have small additional costs but significant potential for energy savings, have been analyzed by practicable architectural, engineering, or economic judgment.

## VII. Measures Concerning Radon and Other Indoor Air Pollutants

Section 305(a)(2)(C) of the ECPA requires the Department to consider, where appropriate, measures with regard to radon and other indoor air pollutants. The Department has proposed a set of radon requirements concerning the control and mitigation of radon in Federal residences. These requirements draw heavily from the EPA *Radon Mitigation Standards,* EPA 402-R–93–078, April 1994. As part of these proposed requirements, post-occupancy testing is proposed for locations with high radon potential to discover whether radon concentrations within the residences are acceptable. The proposed Federal rule also includes requirements for addressing the potential for backdrafting of combustion by-products, such as carbon monoxide, from fossil-fuel-burning appliances.

## VIII. Findings and Certification

### *A. Review Under the National Environmental Policy Act*

The Department has completed an Environmental Assessment (EA), see *Environmental Assessment of the Impacts on Building Habitability and the Outdoor Environment Resulting from the Proposed Federal Residential Code,* in support of the proposed rule, pursuant to the implementing regulations of the Council on Environmental Quality (CEQ) (40 CFR Parts 1500–1508), the ''National Environmental Policy Act of 1969, as amended,'' (NEPA) (40 U.S.C. 4221 *et seq.*), the Department's NEPA Implementing Procedures, (10 CFR Part 1021), and the Secretarial Policy on the National Environmental Policy Act (June 1994). Section V.B.2. of the Secretarial Policy requires, wherever possible, that the Department provide an opportunity for interested parties to review environmental assessments prior to the Department's formal approval of such assessments. The written public comment procedures for this EA are discussed below in section IX.

The draft EA addresses the possible incremental environmental and indoor habitability effects attributable to the application of the proposed rule. The analysis in the draft EA demonstrates that the potential environmental effects from the proposed rule would be limited. The only impacts would be a decrease in outdoor air pollutants resulting from decreased fossil fuel burning and temporary increases in formaldehyde concentrations in the Federal residences.

### *B. Environmental Protection Agency Review*

As required by the Federal Energy Administration Act of 1974, 15 U.S.C. 766(a)(1), a copy of this proposed rule

was submitted to the Administrator of the Environmental Protection Agency for comments on the impact of the proposed rule on the quality of the environment.

*C. Regulatory Planning and Review*

This regulatory action has been determined to be a significant regulatory action under Executive Order No. 12866, 58 FR 51735 (October 4, 1993), but not economically significant. Accordingly, today's action was subject to review under the Executive Order by the Office of Information and Regulatory Affairs (OIRA) and OIRA has completed its review.

*D. Federalism Review*

Executive Order 12612, 52 FR 41685 (October 30, 1987), requires that regulations, rules, legislation, and any other policy actions be reviewed for any substantial direct effects on states, on the relationship between the Federal government and the states, or in the distribution of power and responsibilities among various levels of government. If there are substantial effects, then the Executive Order requires preparation of a federalism assessment to be used in all decisions involved in promulgating and implementing a policy action.

The proposed rule would establish energy-efficiency requirements solely applicable to new Federal residential buildings. It does not impose any requirements on state governments. Therefore, the Department finds that today's proposed rule, if finalized, will not have a substantial direct effect on state governments, therefore, a federalism assessment has not been prepared.

*E. Review Under the Executive Order on Metric Usage in Federal Government Programs*

Section 5164(b) of the Omnibus Trade and Competitiveness Act of 1988, 15 U.S.C. 205b, which amended the Metric Conversion Act of 1975, designates the metric system of measurement as the preferred system of weights and measures for trade and commerce. This law requires Federal agencies by the end of fiscal year 1992 and to the extent economically feasible, to use the metric system in U. S. procurements, grants, and other business-related activities, except to the extent that such use is impractical or likely to cause significant inefficiences or loss of markets to U.S. firms. The Omnibus Trade and Competitiveness Act of 1988 also requires Federal agencies to establish guidelines and to report as part of its annual budget submission on the actions it plans in order to implement fully the metric system of measurement. This policy is also stated and amplified by Executive Order 12770 of July 25, 1991, ''Metric Usage in Federal Government Programs.''

This rule is the first use of a dual metric/English (soft metric conversion) system of measurement in a Federal building energy regulation. The metric system of measurement is followed by the English system in parentheses. In using this dual system, the Department is facilitating the goal of 15 U.S.C. 205b to promote competitiveness by relating Federal energy standards to the international measurements that United States companies must use to meet world demand for building components. The rule retains reference to English system measurements for those companies that do not have the ability to readily translate between metric and English units. The use of this dual system of measurement does not change the requirements of the proposed rule and has no substantive impact on the users of the proposed rule.

*F. Review Under Executive Order on Civil Justice Reform*

Section 3 of Executive Order 12988, 61 FR 4729 (February 7, 1996), instructs each agency to adhere to certain requirements in promulgating new regulations. These requirements, set forth in Section 3(a) and (b), include eliminating drafting errors and needless ambiguity, drafting the regulations to minimize litigation, providing clear and certain legal standards for affected legal conduct, and promoting simplification and burden reduction. Agencies are also instructed to make every reasonable effort to ensure that the regulation describes any administrative proceeding to be available prior to the judicial review and any provisions for the exhaustion of administrative remedies. The Department has determined that today's regulatory action meets the requirements of section 3(a) and (b) of Executive Order 12988.

*G. Review Under the Regulatory Flexibility Act*

The Regulatory Flexibility Act of 1980, 5 U.S.C. 601–612, requires that an agency prepare an initial regulatory flexibility analysis and that it be published at the time of publication of general notice of proposed rulemaking for the rule. This requirement does not apply if the agency ''certifies that the rule will not, if promulgated, have a significant economic impact on a substantial number of small entities.'' 5 U.S.C. 605.

The proposed rule only imposes requirements on the Federal government for the construction of new Federal residential buildings. Therefore, the Department certifies that this rule, if promulgated, would not have a significant economic impact on a substantial number of small entities.

*H. Paperwork Reduction Act Review*

This proposed rule was examined with respect to the Paperwork Reduction Act, 44 U.S.C. 3501 *et seq.*, which directs agencies to minimize Federal information collection and reporting burdens imposed on individuals, small businesses, and state and local governments.

This proposed rule would establish requirements for the design of new Federal residential buildings. It does not impose requirements for the collection or reporting of information to the Federal Government. Accordingly, clearance under the Paperwork Reduction Act of 1980 is not required by the Office of Information and Regulatory Affairs of the Office of Management and Budget.

*I. Review Under Section 32 of the Federal Energy Administration Authorization Act*

Pursuant to Section 301 of the Department of Energy Organization Act (Pub. L. 95–91), the Department is required to comply with Section 32 of the Federal Energy Administration Authorization Act of 1974, as amended by section 9 of the Federal Energy Administration Authorization Act of 1977. The findings required of the Department by Section 32 serve to notify the public regarding the use of commercial standards in a proposal and through the rulemaking process. It allows interested persons to make known their views regarding the appropriateness of the use of any particular commercial standard in a notice of proposed rulemaking. Section 32 also requires that the Department consult with the Attorney General and the Chairman of the Federal Trade Commission concerning the impacts of such standards on competition.

Today's proposed rule adopts, in significant part, the MEC, 1992, 1993 and 1995 and the relevant reference standards (RS) contained in the MEC, 1992, 1993, and 1995. The reference standards can be found in Subpart H of the proposed rule designated as RS–1—RS–34. In addition, the proposed rule adopts certain requirements from Standard 90.2–1993.

The Department has evaluated the promulgation of the above standards with regard to compliance with Section

32(b). The Department is unable to conclude whether these standards fully comply with the requirements of Section 32(b), i.e., that they were developed in a manner which fully provided for public participation, comment, and review. Therefore, the Department now invites public comment on the appropriateness of incorporating these industry standards in its final rule. As required by Section 32(c), the Department will consult with the Attorney General and the Chairman of the Federal Trade Commission concerning the impact of these standards on competition, prior to issuing a notice of Final rulemaking.

*J. Unfunded Mandates Reform Act Review*

Title II of the Unfunded Mandates Reform Act of 1995 (the Act), enacted as Pub. L. 104–4 on March 22, 1995, requires each Federal agency, to the extent permitted by law, to prepare a written assessment of the effects of any Federal mandate in a proposed or final agency rule that may result in the expenditure by state, local, and tribal governments, in the aggregate, or by the private sector, of $100 million or more (adjusted annually for inflation) in any one year. The requirements do not apply if the rule incorporates regulatory requirements that are specifically set forth in law. 2 U.S.C. 1531, 1532.

Furthermore, section 204(a) of the Act, 2 U.S.C. 1534(a), requires the Federal agency to develop an effective process to permit timely input by elected officers (or their designees) of state, local, and tribal governments on a proposed ''significant intergovernmental mandate.'' A ''significant intergovernmental mandate'' under the Act is any provision in a Federal agency regulation that: (1) would impose an enforceable duty upon state, local, or tribal governments (except as a condition of Federal assistance); and (2) may result in the expenditure by state, local, and tribal governments, in the aggregate, of $100 million (adjusted annually for inflation) in any one year. Section 203 of the Act, which supplements section 204(a), provides that before establishing any regulatory requirements that might significantly or uniquely affect small governments, the agency shall have developed a plan that, among other things, provides for notice to potentially affected small governments, if any, and for a meaningful and timely opportunity to provide input in the development of regulatory proposals. 2 U.S.C. 1533.

The rule proposed today would establish building energy-efficiency standards for new Federal residential buildings pursuant to section 305(a) of the Energy Conservation and Production Act, as amended. 42 U.S.C. 6834(a). It does not include any Federal requirements that would result in the expenditure of money by state, local, and tribal governments. Therefore, the requirements of the Unfunded Mandates Reform Act of 1995 do not apply to this rulemaking.

## IX. Public Comment Procedures

*A. Participation in Rulemaking*

The Department encourages the maximum level of public participation in this rulemaking. Representatives of Federal agencies, utilities, state and local governments, building code organizations, and builder associations, building owner associations, as well as individuals, architects, engineers, builders, building owners, consumers, and others are urged to submit written statements on the proposed rule. The Department also encourages interested persons to participate in the public hearing to be held in Washington, D.C., at the time and place indicated in this Notice.

The Department of Energy has established a comment period of 90 days following publication for interested persons to comment on this proposed rule. All comments will be available for review in the Department's Freedom of Information Reading Room.

*B. Solicitation of Public Comments*

The Department welcomes comments on any aspects of the proposed rule and supporting documentation, including the draft EA. In particular, the Department is seeking comments on those specific issues described below. The Department requests that comments of a technical nature be supported by substantive data.

In particular, the Department requests comments addressing the quantitative and methodological basis for setting specific ventilation requirements in energy codes that relate to Federal residential construction. Ventilation can help mitigate indoor air pollutants and moisture problems in many situations. Excessive ventilation, however, can increase energy use but not necessarily mitigate the health effects of some indoor air pollutants. The Department is interested in comments on how best to set ventilation requirements to achieve adequate indoor air quality without incurring unnecessary construction or energy costs.

Second, the Department seeks comments on whether all residences with fuel-burning devices requiring a vent pipe or chimney should be required to undergo testing for depressurization-induced chimney failure (backdrafting). The Department has included this requirement in the proposed rule because of the health hazard of backdrafting.

Third, the Department specifically requests comments regarding the treatment of equipment efficiency for space heating and cooling and water heating. The proposed rule incorporates the existing Federal minimum appliance standards, while relying on other Federal initiatives to encourage the identification and use of more efficient equipment where economically justified.

The Department would have to establish the economic benefits and technological feasibility of any equipment efficiency specifications that would be included in this rule that exceed the Federal minimum requirements.

Fourth, the Department requests comments concerning the technological feasibility and economic justification relative to the heating and cooling equipment sizing provisions contained in the proposed rule.

Fifth, the Department requests comments concerning suggestions on approaches for crediting measures that use renewable sources of energy.

Sixth, the Department requests comments on the appropriateness of the approach identified in section 435.402.1.6 of the proposed rule for dealing with equipment efficiencies under the whole building energy analysis compliance path in Subpart D.

Seventh, the Department requests comments on whether carbon dioxide alarms should be required in Federal residences.

Eighth, the Department requests comment on how this proposed rule could address equipment technologies for which a means of evaluating and comparing energy performance has not yet been fully developed.

Finally, as previously stated, the Department of Energy requests public review and comments on the draft EA.

*C. Written Comment Procedures*

Interested persons are invited to participate in this proceeding by submitting written data, views, or comments with respect to the proposed rulemaking.

Written comments (ten copies) shall be submitted to the address indicated in the **ADDRESSES** section of this notice. The copies must be received by the date indicated in the **DATES** section of this notice. Comments should be identified on both the outside of the envelope and on the documents themselves with the

designation, *Energy Efficiency Code for New Federal Residential Buildings* (Docket No. EE–RM–96–300). In the event any person wishing to provide written comments cannot provide ten copies, alternative arrangements can be made in advance with the Department.

All comments received on or before the date specified at the beginning of this proposed rule and other relevant information will be considered by the Department before final action is taken on the proposed rule. All written comments will be available for examination in the Rule Docket File in the Department's Freedom of Information Office Reading Room at the address provided at the beginning of this document before and after the closing date for comments. In addition, a transcript of the proceedings of the public hearings will be filed in the docket.

Pursuant to the provisions of 10 CFR 1004.11, any person submitting information that is believed to be confidential, and which may be exempt by law from public disclosure, should submit one complete copy, and two copies from which the information believed to be confidential has been deleted. The Department will make its own determination of any such claim and treat it according to its determination.

*D. Public Hearings*

1. Procedure for Submitting Requests To Speak

To have the benefit of a broad range of public viewpoints in this rulemaking, the Department will hold a public hearing at the time and place indicated in the **DATES** and **ADDRESSES** sections of this notice. Any person who has an interest or who is a representative of a group or class of persons that has an interest in the proposed rule or the associated environmental assessment may request an opportunity to make an oral presentation. A request to speak at the public hearing must be mailed to the address or telephoned to the number indicated in the **ADDRESSES** section of this notice and received by the time specified in the **DATES** section of this notice.

The person making the request should briefly describe his or her interest in the proceedings and, if appropriate, state why that person is a proper representative of the group or class of persons that has such an interest. The person should also provide a telephone number where he or she may be contacted during the day. Each person selected to be heard will be notified by the Department as to the approximate time he or she will be speaking. Ten copies of the speaker's statement must be submitted at or before the hearing. In the event any person wishing to testify cannot meet this requirement, alternative arrangements can be made in advance with the Department.

2. Conduct of Hearings

The Department reserves the right to schedule persons to be heard at the hearing, to schedule their representative presentations, and to establish procedures governing the conduct of the hearing. The length of each presentation is limited to 15 minutes or otherwise based on the number of persons requesting an opportunity to speak.

A Department official will preside at the hearing. This will not be a judicial or evidentiary-type hearing. It will be conducted in accordance with 5 U.S.C. 553 and Section 501 of the Department of Energy Organization Act, 42 U.S.C. 7191. At the conclusion of all initial oral statements, each person who has made an oral statement will be given the opportunity to make a rebuttal or clarifying statement. The statements will be given in the order in which the initial statements were made and will be subject to time limitations.

Questions may be asked only by those conducting the hearing. Any interested person may submit to the presiding official written questions to be asked of any person making a statement at the hearing. The presiding official will determine whether the question is relevant or whether time limitations permit it to be presented for a response.

Any further procedural rules needed for the proper conduct of the hearing will be announced by the presiding official at the hearing.

A transcript of the hearing will be prepared by the Department and made available as part of the administrative record for this rulemaking. It will be on file for inspection at the Department's Freedom of Information Reading Room as provided at the address indicated at the beginning of this document.

If the Department must cancel the public hearing, the Department will make every effort to publish an advance notice of such cancellation in the **Federal Register**. The hearing date may be canceled, for example, in the event no member of the public requests the opportunity to make an oral presentation.

**List of Subjects in 10 CFR Part 435**

Buildings, Energy conservation, Energy efficiency, Engineers, Federal buildings and facilities, Housing.

Issued in Washington, DC, on April 1, 1997.

**Brian T. Castelli,**

*Chief of Staff, Energy Efficiency and Renewable Energy.*

For the reasons set forth in the preamble, Part 435 of Chapter II of Title 10 of the Code of Federal Regulations is proposed to be revised as set forth below:

## PART 435—ENERGY EFFICIENCY CODE FOR NEW FEDERAL RESIDENTIAL BUILDINGS

435.100 Explanation of numbering system for this part.

**Subpart A—Administration and Enforcement**

435.101 Scope and general requirements.
435.102 Materials and equipment.
435.103 Alternate materials'method of construction, design, or insulation systems.
435.104 [Reserved].
435.105 [Reserved].
435.106 [Reserved].
435.107 Precedence.
435.108 Life-cycle cost analysis.

**Subpart B—Definitions**

435.201 Definitions.

**Subpart C—Design Conditions**

435.301 Scope.
435.302 Thermal design parameters.
435.303 Mechanical ventilation criteria.

**Subpart D—Design by Systems Analysis; Design Utilizing Renewable Energy Sources**

435.401 Scope.
435.402 Systems analysis.
435.403 Renewable energy source analysis.

**Subpart E—Design by Component Performance Approach**

435.501 Scope.
435.502 Building thermal envelope requirements.
435.503 Building mechanical systems and equipment.
435.504 Service water heating.
435.505 Electrical power and lighting.

**Subpart F—[Reserved]**

**Subpart G—Radon Control**

435.701 General.
435.702 Scope.
435.703 Compliance.
435.704 Alternative systems.
435.705 Conflict with other standards, codes, or regulations.
435.706 Qualification of testers and installers.
435.707 Design and construction requirements.

**Subpart H—Standards**

435.801 Reference standards.
435.802 Abbreviations and acronyms used in reference standards.

**Appendix to Part 435 Figures and Tables**

**Authority:** 42 U.S.C. 6831–6832, 6834–6836; 42 U.S.C. 8253–54; 42 U.S.C. 7101, *et seq.*

### § 435.100 Explanation of numbering system for this part.

100.1 General. For the purposes of this part, a derivative of two different numbering systems will be used.

100.1.1 For the purpose of designating a section, the numbering system employed in the Code of Federal Regulations (CFR) will be employed. The number ''435'' which signifies part 435, Chapter II of Title 10, Code of Federal Regulations, is used as a prefix for all section headings. The suffix is a three digit number. For example, the life-cycle cost analysis section of this part is designated § 435.108.

100.1.2 Within each section, a numbering system common to many national voluntary consensus model codes is used. A decimal system is used to denote paragraphs and subparagraphs within a section. For example, 435.502.1.2 refers to subparagraph 2 of paragraph 1 of § 435.502.

100.2 The hybrid numbering system is used for two purposes:

100.2.1 The use of the Code of Federal Regulation numbering system allows the researcher using the CFR easy access to this part.

100.2.2 The use of the second system allows the builder, designer, architect or engineer easy access to the technical provisions because they are familiar with the numbering system and its format generally conforms to existing building codes. This system was chosen because of its commonality among the buildings industry.

## Subpart A—Administration and Enforcement

### § 435.101 Scope and general requirements.

101.1 Title. This part shall be known as the Energy Efficiency Code for New Federal Residential Buildings and is referred to herein as ''this part.''

101.2 Purpose. The provisions of this part provide minimum standards for energy efficiency for the design of new Federal residential buildings. The performance standards are designed to achieve the maximum practicable cost-effective improvements in energy efficiency and increases in the use of non-depletable sources of energy. It is intended that these provisions provide flexibility to permit the use of innovative approaches and techniques to achieve efficient utilization of energy. This part also establishes minimum requirements for the control of radon in new Federal residential buildings.

101.3 Compliance. This part requires:

101.3.1 Use of a systems approach for the entire building and its energy-using subsystems which may utilize renewable sources as established in Subpart D or use of a component performance approach for various building elements and mechanical systems and components as established in subpart E; and

101.3.2 Compliance with the radon requirements is established in subpart G.

101.4 Scope. This part provides design requirements for building envelopes for adequate thermal resistance and low air leakage and the design and selection of mechanical, electrical, service water-heating and illumination systems and equipment which will enable efficient use of energy in new Federal residential building construction. It applies to the design and construction of all new Federal residential buildings that are three stories or less above grade that are not subject to state or local building codes. Federal residential buildings more than three stories above grade and all Federal nonresidential buildings must comply with the Energy Code for Federal Commercial and Multi-Family High-Rise Residential Buildings.

101.4.1 Radon control. This part also establishes requirements for control of radon for certain new Federal residential buildings. The applicability of those requirements is established in section 702.

101.4.2 Building types.

101.4.2.1 Group R Federal residential buildings. For the purposes of this part, Group R residential buildings include:

(a) Type A–1—Detached one and two family dwellings, and

(b) Type A–2—Other residential buildings, three stories or less in height.

101.4.2.2 Other buildings. Any buildings and structures not included in section 101.4.2.1 are not covered by this rule.

101.4.3 Exempt buildings. The building types that are exempt are as follows: assembly, health, and

101.4.3.1 Buildings and structures or portions thereof whose peak design rate of energy usage is less than 1.0 W (3.4 Btu/h) or 10.8 W/m$^2$ (1 W/ft$^2$) of floor area for all purposes.

101.4.3.2 Buildings and structures or portions thereof which are neither heated nor cooled.

101.4.4 Application to existing buildings.

101.4.4.1 Additions to existing buildings. Additions to existing buildings or structures may be made to such buildings or structures without making the entire building or structure comply. The new addition shall conform to the provisions of this part as they relate to new construction only.

### § 435.102 Materials and equipment.

102.1 Identification.

102.1.1 General. Materials and equipment shall be identified on the building plans and specifications in a manner that will allow for a determination of their compliance with the applicable provisions of this part.

102.1.2 Building envelope insulation. Building envelope insulation shall have a thermal resistance (R) identification marker on each piece of building envelope insulation 0.3048 m (12 in.) or greater in width. Alternatively, a signed and dated certification for the insulation installed in each element of the building envelope shall be provided, listing the type of insulation, the manufacturer, and the R-value. For blown-in or sprayed insulation, a certification shall be provided that identifies the initial installed thickness, the settled thickness, the coverage area, and the number of bags of insulation installed. The certification shall be posted in a conspicuous place on the job site.

102.1.3 Insulation installation. Roof-ceiling, floor, and wall-cavity insulation shall be installed to permit inspection of the manufacturer's R-value identification mark. Alternatively, the thickness of roof-ceiling insulation that is blown in or sprayed shall be identified by thickness markers that are labeled in meters (inches) and installed at least one every 27.9 m$^2$ (300 ft$^2$) of attic space. The markers shall be affixed to the roof trusses or ceiling joists and marked with the minimum installed thickness and minimum settled thickness using numbers 25.4 mm (1 in.) or greater in height. Each marker shall face the attic access opening. The thickness of installed insulation shall meet or exceed the minimum installed thickness shown by the marker.

102.2 Maintenance information. Required regular maintenance actions shall be clearly stated on a readily accessible label. Such label may be limited to identifying, by title or publication number, the operation and maintenance manual for that particular model and type of product. Maintenance instructions shall be furnished for equipment which requires preventive maintenance for efficient operation.

102.3 Fenestration product rating, certification, and labeling. Fenestration products (windows, doors, and skylights) purchased by the Federal government shall have assigned U-values. If tested for U-value, the U-values of fenestration products (windows, doors, and skylights) shall be determined in accordance with RS–1, by an accredited, independent laboratory. The tested U-value of the fenestration product shall be certified and the certified U-value shall be labeled on a conspicuous place on the product. Such certified and labeled U-values shall be accepted for purposes of determining compliance with the building envelope requirements of this part.

102.3.1 Exception. Where a fenestration product has not been assigned a U-value in accordance with RS–1 for a particular product line, that product shall be assigned a default U-value in accordance with Appendix Tables 102.3.1 and 102.3.2. Product features must be technically verifiable for the product to qualify for the U-value associated with those features. Where the existence of a particular feature cannot be determined with reasonable certainty, the product shall not receive credit for that feature. Where a composite of materials from two different product types are used, the product shall be assigned the higher U-value.

### § 435.103 Alternate materials—method of construction, design, or insulation systems.

103.1 The provisions of this part are not intended to prevent the use of any material, method of construction, design or insulating system not specifically prescribed herein, provided that such construction, design or insulating system has been approved as meeting the intent of this part.

### § 435.104 [Reserved]

### § 435.105 [Reserved]

### § 435.106 [Reserved]

### § 435.107 Precedence.

107.1 When different sections of this part, or a section of this part and a section of a referenced standard from section 801 of this part, specify different materials, methods of construction, or other requirements, the more stringent or restrictive requirement shall govern. Whenever there is a conflict between a general requirement and a specific requirement, the specific requirement shall govern.

### § 435.108 Life-cycle cost analysis.

108.1 The proposed building design(s) shall be evaluated in accordance with the requirements of the Federal Energy Management Program described in subpart A of 10 CFR part 436 to determine its life-cycle cost.

## Subpart B—Definitions

### § 435.201 Definitions.

For the purposes of this part, certain abbreviations, terms, phrases, words and their derivatives shall be set forth in this section.

*Accessible (as applied to equipment).* Admitting close approach; not guarded by locked doors, elevation, or other effective means (see ''Readily accessible'').

*Addition.* Increase in conditioned floor area.

*Air film.* Air immediately adjacent to surfaces of building materials which helps to inhibit heat flow through those materials.

*Air transport factor.* The ratio of the rate of useful sensible heat removal from the conditioned space to the energy input to the supply and return fan motor expressed in consistent units and under the designated operating conditions.

*Attic.* A space directly underneath the roof sheathing and directly above or adjacent to the interior surfaces of the topmost story of a building that satisfies all of the following conditions:

(1) The structural members comprising the roof are separate and distinct rafters and ceiling joists or truss assemblies;

(2) The space is ventilated in accordance with the requirements of the applicable building code;

(3) The clear height from the top of the ceiling joists to the highest point of the underside of the rafters is greater than 0.762 m (30 in.); and

(4) The space is provided with a readily accessible access in accordance with the requirements of the applicable building code.

*Automatic.* Self-acting, operating by its own mechanism when actuated by some impersonal influence, as, for example, a change in current strength, pressure, temperature or mechanical configuration (see also ''Manual'').

*Basement wall.* The opaque portion of a wall which encloses one side of a basement and is partially or totally below grade.

*Building code.* The legal instrument which is in effect in a state or unit of general purpose local government, the provisions of which must be adhered to if a building is to be considered to be in conformance with law and suitable for occupancy and use.

*Building envelope.* The elements of a building which enclose conditioned spaces through which thermal energy may be transferred to or from the exterior or to or from spaces located in buildings exempted by the provisions of section 101.4.2.

*Comfort air conditioning.* The process of treating air so as to control simultaneously its temperature, humidity, cleanliness, and distribution to meet requirements of the conditioned space.

*Comfort envelope.* The area of a psychrometric chart enclosing all those conditions described in Figure 1 in Standard RS–2 listed in section 801 as being comfortable.

*Conditioned floor area.* The horizontal projection of that portion of interior space which is contained within exterior walls and which is conditioned directly or indirectly by an energy-using system.

*Conditioned space.* Space within a building which is provided with heated and/or cooled air or surfaces and, where required, with humidification or dehumidification means so as to be capable of maintaining a space condition falling within the comfort zone set forth by Standard RS–2 listed in section 801.

*Cooled space.* Space within a building which is provided with a positive cooling supply.

*Crawl space wall.* The opaque portion of a wall which encloses a crawl space and is partially or totally below grade.

*Deadband.* The temperature range in which no heating or cooling is used.

*Degree day, cooling.* A unit, based upon temperature difference and time, used in estimating fuel consumption and specifying nominal cooling load of a building in summer. For any one day, when the mean temperature is greater than 18.3 °C (65 °F), there exists as many degree days as there are Celsius (Fahrenheit) degrees difference in temperature between the mean temperature for the day and 18.3 °C (65 °F).

*Degree day, heating.* A unit, based upon temperature difference and time, used in estimating fuel consumption and specifying nominal heating load of a building in winter. For any one day, when the mean temperature is less than 18.3 °C (65 °F), there exists as many degree days as there are Celsius (Fahrenheit) degrees difference in temperature between the mean temperature for the day and 18.3 °C (65 °F).

*Drain tile loop.* A continuous length of drain tile or perforated pipe extending around all or part of the internal or external perimeter of a basement or crawl space footing.

*Dwelling unit.* A single housekeeping unit comprised of one or more rooms providing complete independent living

facilities for one or more persons, including permanent provisions for living, sleeping, eating, cooking and sanitation.

*Efficiency, HVAC system.* The ratio of useful energy output (at the point of use) to the energy input in consistent units for a designated time period, expressed in percent.

*Energy.* The capacity for doing work taking a number of forms which may be transformed from one into another, such as thermal (heat), mechanical (work), electrical and chemical in customary units, measured in kilowatt-hours (kWh) or Kilojoules [British thermal units (Btus)].

*Energy source.* Electricity, natural gas, propane gas or fuel oil that is available at a residential building for space heating, space cooling, service water heating and lighting. See also ''Renewable energy sources.''

*Equipment type.* HVAC system equipment or service water heating equipment that (1) performs a specific function(s) (e.g., space heating or space heating and service water heating), (2) uses a specific energy source(s) (e.g., electricity or a ''dual-fuel'' furnace that can use electricity or natural gas), and (3) employs a specific operational principle (e.g., direct combustion, heat rejection to air, heat extraction from ground water). Example: A heat pump water heater is a different equipment type from an electric resistance water heater.

*Exterior envelope.* See ''Building envelope.''

*Federal agency.* Any department, agency, corporation, or other entity or instrumentality of the executive branch of the Federal government, including the United States Postal Service, the Federal National Mortgage Association, and the Federal Home Loan Mortgage Corporation.

*Federal residential building.* Any detached one- or two-family residential dwelling or other residential building or structure, three stories or less in height, to be constructed or developed for residential occupancy by, or for the use of, any Federal agency that is not legally subject to state or local building codes or similar requirements.

*Furnace, duct.* A furnace normally installed in distribution ducts of air conditioning systems to supply warm air for heating and which depends on a blower not furnished as part of the duct furnace for air circulation.

*Furnace, warm air.* A self-contained, indirect-fired or electrically heated furnace that supplies heated air through ducts to spaces that require it.

*Glazing area.* Interior surface area of assemblies that enclose conditioned space and that contain glazing, such as windows, sliding glass doors, and skylights, including the frame, sash, curbing, muntins, and other framing element.

*Grade.* The finished ground level adjoining the building at all exterior walls.

*Gross area of exterior walls.* The normal projection of the building envelope wall area bounding interior space which is conditioned by an energy-using system, including opaque wall, window and door area. The gross area of exterior walls consists of all opaque wall areas, including between floor spandrels, peripheral edges of floors, window areas including sash, and door areas, where such surfaces are exposed to outdoor air, unconditioned spaces, or spaces exempted by section 101.4.2, and where such spaces enclose a heated or mechanically cooled space, including interstitial areas between two such spaces. For each basement wall with an average below-grade area less than 50% of its total wall area, including openings, the entire wall, including the below-grade portion, is included as part of the gross area of exterior walls. Nonopaque areas (windows, doors, etc.) of all basement walls are included in the gross area of exterior walls.

*Gross floor area.* The sum of the areas of the several floors of the building, including basements, cellars, mezzanine and intermediate floored tiers and penthouses of headroom height, measured from the exterior faces of exterior walls or from the center line of walls separating buildings, but excluding:

(a) Covered walkways, open roofed-over areas, porches and similar spaces.

(b) Pipe trenches, exterior terraces or steps, chimneys, roof overhangs and similar features.

*Group R Federal residential buildings.* For the purpose of this part, Group R Federal residential buildings include:

(a) Type A–1—Detached one and two family dwellings; and,

(b) Type A–2—Other Federal residential buildings, three stories or less in height.

*Heat.* The form of energy that is transferred by virtue of a temperature difference or a change in state of a material.

*Heat trap.* An arrangement of piping connecting to a hot water heater such that the piping makes an inverted ''U'' just before connecting to the heater fittings. Any other arrangement, including a commercially available heat trap, which effectively restricts the natural tendency of hot water to rise also qualifies as a heat trap.

*Heated slab.* Slab-on-grade construction in which the heating elements or hot air distribution system is in contact with or placed within the slab or in the subgrade.

*Heated space.* Space within a building which is provided with a positive heat supply. Finished living space within a basement with registers or heating devices designed to supply heat to a basement space shall automatically define that space as heated space.

*Humidistat.* A regulatory device, actuated by changes in humidity, used for automatic control of relative humidity.

*HVAC.* Heating, ventilating and air conditioning.

*HVAC system.* The equipment, distribution network, and terminals that provide, either collectively or individually, the processes of heating, ventilating, or air conditioning to a building.

*HVAC system components.* HVAC system components provide, in one or more factory-assembled packages, means for chilling and/or heating water with controlled temperature for delivery to terminal units serving the conditioned spaces of the building. Types of HVAC system components include, but are not limited to, water chiller packages, reciprocating condensing units and water source (hydronic) heat pumps (see ''HVAC system equipment'').

*HVAC system efficiency.* See ''Efficiency, HVAC system.''

*HVAC system equipment.* HVAC system equipment provides, in one (single package) or more (split system) factory-assembled packages, means for air circulation, air cleaning, air cooling with controlled temperature and dehumidification, and, optionally, either alone or in combination with a heating plant, the functions of heating and humidifying. The cooling function may be either electrically or heat operated and the refrigerant condenser may be air, water or evaporatively cooled. Where the equipment is provided in more than one package, the separate packages shall be designed by the manufacturer to be used together. The equipment may provide the heating function as a heat pump or by the use of electric or fossil-fuel-fired elements. (The word ''equipment'' used without modifying adjective may, in accordance with common industry usage, apply either to HVAC system equipment or HVAC system components.)

*Infiltration.* The uncontrolled inward air leakage through cracks and interstices in any building element and around windows and doors of a

building caused by the pressure effects of wind and/or the effect of differences in the indoor and outdoor air density.

*Life-cycle cost.* The total discounted cost of owning, operating, and maintaining a building or piece of equipment over its useful life (including its fuel, energy, labor, and replacement components) determined on the basis of a systematic evaluation except that in the case of leased buildings, the life-cycle cost shall be calculated over the effective remaining term of the lease.

*Manual.* Capable of being operated by personal intervention (see ''Automatic'').

*Multi-family dwelling.* A building containing three or more dwelling units.

*Opaque areas.* All exposed areas of a building envelope which enclose conditioned space, except openings for windows, skylights, doors and building service systems.

*Outdoor air.* Air taken from the outdoors and, therefore, not previously circulated through the system.

*Packaged terminal air conditioner.* A factory-selected wall sleeve and separate unencased combination of heating and cooling components, assemblies or sections intended for mounting through the wall to serve a single room or zone. It includes heating capability by hot water, steam, or electricity.

*Packaged terminal heat pump.* A packaged terminal air conditioner capable of using the refrigeration system in a reverse cycle or heat pump mode to provide heat.

*pCi/L.* The abbreviation for ''picocuries per liter,'' which is used as a measure for radon concentrations in air. A picocurie is one-trillionth ($10^{-12}$) of a curie. A ''curie'' is a commonly used measurement of radioactivity.

*Positive cooling supply.* Mechanical cooling deliberately supplied to a space such as through a supply register. Also, mechanical cooling indirectly supplied to a space through uninsulated surfaces of space-cooling components, such as evaporator coil cases and cooling distribution systems which continually maintain air temperatures within the space of 29.4 °C (85 °F) or lower during normal operation. To be considered exempt from inclusion in this definition, such surfaces shall comply with the insulation requirements of this part.

*Positive heat supply.* Heat deliberately supplied to a space by design, such as a supply register, radiator or heating element. Also, heat indirectly supplied to a space through uninsulated surfaces of service water heaters and space heating components, such as furnaces, boilers and heating and cooling distribution systems which continually maintain air temperature within the space of 10 °C (50 °F) or higher during normal operation. To be considered exempt from inclusion in this definition, such surfaces shall comply with the insulation requirements of this part.

*Proposed design.* A building design submitted in response to a request for proposals for the construction of a new Federal residential building.

*Readily accessible.* Capable of being reached quickly for operation, maintenance, removal, or inspection, without requiring the need to climb over or remove obstacles or to resort to portable ladders or chairs (see ''Accessible'').

*Renewable energy sources.* Sources of energy (excluding minerals) derived from incoming solar radiation, including natural daylighting and photosynthetic processes; from phenomena resulting therefrom, including wind, waves and tides, lake or pond thermal differences; and from the internal heat of the earth, including nocturnal thermal exchanges.

*Reset.* Adjustment of the set point of a control instrument to a higher or lower value automatically or manually to conserve energy.

*Roof assembly.* All components of the roof/ceiling envelope through which heat flows, thus creating a building transmission heat loss or gain, where such assembly is exposed to outdoor air and encloses a heated or mechanically cooled space. The gross area of a roof assembly consists of the total interior surface of such assembly, including skylights exposed to the heated or mechanically cooled space.

*Sash crack.* The sum of all perimeters of all window sashes, based on overall dimensions of such parts, expressed in meters (feet). If a portion of one sash perimeter overlaps a portion of another sash perimeter, only count the length of the overlapping portions once.

*Sensible capacity.* The maximum sensible load for which a piece of equipment is designed to remove or add sensible heat.

*Sensible load.* The cooling or heating load to remove or add the sensible heat that causes a temperature change.

*Service systems.* All energy-using systems in a building that are operated to provide services for the occupants or processes housed therein, including HVAC, service water heating, illumination, transportation, cooking or food preparation, laundering or similar functions.

*Service water heating.* Supply of hot water for purposes other than comfort heating.

*Slab-on-grade floor insulation.* Insulation around the perimeter of the floor slab or its supporting foundation when the top edge of the floor slab perimeter is above the finished grade or 0.305 m (12 in.) or less below the finished grade.

*Soil gas.* The gas, present in soil, which may contain radon.

*Soil gas retarder.* A continuous membrane or other comparable material used to retard the flow of soil gas into a building.

*Solar energy source.* Source of natural daylighting and of thermal, chemical or electrical energy derived directly from conversion of incident solar radiation.

*Standard design.* A building designed to exactly meet but not exceed all requirements in Subpart E of this part.

*Submembrane depressurization system.* A system designed to achieve a lower air pressure beneath the soil gas retarder in a crawl space, relative to crawl space air pressure, resulting in air withdrawal from under the soil gas retarder either passively (relying on the upward convective flow of air) or actively (by use of a fan-powered vent).

*Subslab depressurization system (active).* A piping system that connects the subslab area with outdoor air, is routed through the conditioned space of a building, and uses a fan-powered vent to draw air from beneath the slab.

*Subslab depressurization system (passive).* A piping system that connects the subslab area with outdoor air, is routed through the conditioned space of a building, and relies on the convective flow of air to draw air from beneath the slab.

*Supplementary heater operation.* The auxiliary electric resistance heating device that provides heat which contributes to the operation of the heat pump when the temperature is too low for the heat pump to operate independently.

*System.* A combination of central or terminal equipment or components and/or controls, accessories, interconnecting means, and terminal devices by which energy is transformed so as to perform a specific function, such as HVAC, service water heating or illumination.

*Technically verifiable.* To visually, physically, or through testing determine the physical characteristics or specifications of an element, material, or object.

*Terminal element.* The means by which the transformed energy from a system is finally delivered; i.e., registers, diffusers, lighting fixtures, faucets and similar elements.

*Thermal conductance.* Time rate of heat flow through a body (frequently per unit area) from one bounding surface to

the other for a unit temperature difference between the two surfaces, under steady conditions (W/m$^2$·°C) [Btu/(h·ft$^2$·°F)].

*Thermal resistance (R).* The reciprocal of thermal conductance (m$^2$·°C/W) [(h·ft$^2$·°F)/Btu].

*Thermal transmittance (U).* The coefficient of heat transmission (air to air). It is the time rate of heat flow per unit area and unit temperature difference between the warm side and cold side air films (W/m$^2$·°C) [Btu/(h·ft$^2$·°F)]. The U-value applies to combinations of different materials used in series along the heat flow path, single materials that comprise a building section, cavity air spaces and surface air films on both sides of a building element.

*Thermal transmittance, overall ($U_o$).* The overall (average) heat transmission of a gross area of exterior building envelope (W/m$^2$·°C) [Btu/(h·ft$^2$·°F)]. The $U_o$ value applies to the combined effect of the time rate of heat flow through the various parallel paths such as windows, doors and opaque construction areas, comprising the gross area of one or more exterior building components, such as walls, floors or roof/ceilings.

*Thermostat.* An automatic control device actuated by temperature and designed to be responsive to temperature.

*Unitary cooling and heating equipment.* One or more factory-made assemblies which include an evaporator or cooling coil, a compressor and condenser combination, and may include a heating function as well. Where such equipment is provided in more than one assembly, the separate assemblies shall be designed to be used together.

*Unitary heat pump.* One or more factory-made assemblies which include an indoor conditioning coil, compressor(s) and outdoor coil or refrigerant-to-water heat exchanger, including means to provide both heating and cooling functions. When such equipment is provided in more than one assembly, the separate assemblies shall be designed to be used together.

*Ventilation.* The process of supplying or removing air by natural or mechanical means to or from any space. Such air may have been conditioned.

*Ventilation air.* That portion of supply air which comes from outside (outdoors) plus any recirculated air that has been treated to maintain the desired quality of air within a designated space. (See Standard RS–3 listed in section 801 of this part, and definition of ''Outdoor air''.)

*Walls.* Those portions of the building envelope which are vertical or tilted at an angle of 30° or less from the vertical plane.

*Zone.* A space or group of spaces within a building with heating and/or cooling requirements sufficiently similar so that comfort conditions can be maintained throughout by a single controlling device.

## Subpart C—Design Conditions

### § 435.301 Scope.

301.1 General. The criteria of this subpart establishes the design conditions for use with Subparts D and E of this part.

### § 435.302 Thermal design parameters.

302.1 Exterior design conditions. The following design parameters from table 302.1 shall be used for calculations required under this part.

TABLE 302.1

[Exterior design conditions]

| | | |
|---|---|---|
| Winter [1] | Design Dry-bulb | °C (°F). |
| Summer [1] | Design Dry-bulb | °C (°F). |
| | Design Wet-bulb | °C (°F). |
| Degree days, heating [2] | | |
| Degree days, cooling [2] | | |

[1] The outdoor design temperature shall be selected from the columns of 97.5% values for winter and 2.5% values for summer from tables in Standard RS–4 listed in section 801. Adjustments may be made to reflect local climates which differ from the tabulated temperatures, or local weather experience.

[2] The degree days, heating [base 18.3°C (65°F)] and cooling [base 18.3°C (65°F)] shall be selected from *NOAA Annual Degree Days to Selected Bases Derived from the 1961—1990 Normals,* Standard RS–4 listed in section 801, data available from adjacent military installations, or other sources of local data.

302.2 Interior design conditions.

302.2.1 Indoor Design Temperature. Indoor design temperature shall be 22.2°C (72°F) for heating and 25.6°C (78°F) for cooling.

302.2.2 Exception. Other design temperatures may be used for equipment selection if it results in a lower energy usage.

### § 435.303 Mechanical ventilation criteria.

303.1 Ventilation. Ventilation air shall conform to Standard RS–3 listed in section 801. The minimum column value of Standard RS–3 for each type of occupancy shall be used for design. The ventilation quantities specified in section 6 of Standard RS–3 are for 100% outdoor air ventilating systems.

303.1.1 Exception. If outdoor air quantities other than those specified in Standard RS–3 are used or required because of special occupancy or process requirements, source control of air contamination, health and safety or other standards, the required outdoor air quantities shall be used as the basis for calculating the heating and cooling design loads.

## Subpart D—Design by Systems Analysis; Design Utilizing Renewable Energy Sources

### § 435.401 Scope.

401.1 General. This subpart establishes design requirements based on a systems analysis of total energy use by a new Federal residential building, including all of its systems. These design requirements may be applied as an alternative to the component performance requirements established in subpart E.

### § 435.402 Systems analysis.

402.1 Energy analysis. Compliance with this subpart requires an analysis of the annual energy usage, hereinafter called an annual energy analysis. The proposed building shall utilize a design that is demonstrated, through technically valid and documented calculations, to have equal or lower annual energy use and equal or lower life-cycle costs than the standard design.

(a) A building designed in accordance with this subpart complies with this part if the calculated annual energy usage and life-cycle costs are not greater than a similar building (defined as a ''standard design'') with building thermal envelope components and mechanical systems and equipment used to provide heating, ventilating, and air-conditioning designed in accordance with subpart E.

(b) For a proposed building to be considered similar to a ''standard design,'' the proposed building shall have the same conditioned floor area, ratio of thermal envelope area to conditioned floor area, exterior design conditions, occupancy, climate data, and usage operational schedule.

(c) The proposed design shall use the same energy source(s) for space heating, space cooling, and domestic water heating as the standard design (identified in subpart E).

402.1.1 Input values for Group R buildings. The input values/assumptions from tables 402.1.1a through 402.1.1g shall be used in calculating the annual energy usage.

TABLE 402.1.1a

[Glazing systems]

| Input Assumptions | | |
|---|---|---|
| Design Parameter | Standard Design | Proposed Design |
| Glazing Orientation | Window area of proposed house, 25% on North, South, East, and West Exterior walls.. | Window area oriented as proposed design. |
| Shading | Draperies shall be assumed to be closed during period of mechanical air conditioner operation.. | Any exterior shading provided by proposed design. |

TABLE 402.1.1b

[Heat storage (thermal mass)]

| | |
|---|---|
| Internal mass | 39.0 kg/m² (8 lb/ft²) |
| Structural mass. | 17.1 kg/m² (3.5 lb/ft²) |

TABLE 402.1.1c

[Building thermal envelope—surface areas and volume]

| Design parameter | Input assumptions |
|---|---|
| Floor, walls, ceiling. | The floor, walls, and ceiling areas for both the standard and proposed design(s) shall be equal. |
| Foundation and floor type. | The foundation and floor type for both the standard and the proposed design(s) shall be equal. |
| Glazings, including skylights. | The area of glazing in the standard design shall not be greater than the area of glazing in the proposed design(s). The glazing U-value of the standard design shall be selected to permit calculated $U_o$-wall compliance of the standard design. |
| | Glazing area in the standard design shall not be provided with extra shading beyond shading that is provided by typical construction practices—such as roof overhangs. Energy performance impacts of added shading for glazing areas may be accounted for in the proposed design(s) for a specific building. Results from shading calculation on one proposed building shall not be used for groups of buildings. |
| Doors of A–1 structures. | The standard design shall have at least 3.7 m² (40 ft²) of door area. |

TABLE 402.1.1c—Continued

[Building thermal envelope—surface areas and volume]

| Design parameter | Input assumptions |
|---|---|
| Building Volume. | The volumes of both the standard and proposed design(s) shall be equal. |

TABLE 402.1.1d

[Thermostat (constants)]

| Design parameter | Input value |
|---|---|
| Heating Set Point | 20.0 °C (68 °F). |
| Cooling Set Point | 25.6 *C (78 *F). |
| Night Set Back | 15.6 *C (60 *F). |
| Set Back Duration | 7 hours. |
| Number of Set-back Periods. | 1 (night time). |
| Maximum number of zones. | 2. |
| Number of thermostats per zone. | 1. |

TABLE 402.1.1e

[Internal Sensible Heat Gains (Constants)]

| Unit type | Input value |
|---|---|
| A–1 Units | 440 W (1,500 Btu/h) |
| A–2 Units | 879 W (3,000 Btu/h) |

TABLE 402.1.1f

[Domestic Water Heater (Constant, Calculation)]

| Design parameter | Input value |
|---|---|
| Temperature set point. | 49 °C (120 °F) |
| Daily hot water consumption. | Liters=113.7×n-units+(37.9×n-bedrooms); [Gallons=(30×n-units)+(10×n-bedrooms)] |

Note:

n-units=number of living units in proposed design(s)

n-bedrooms=number of bedrooms in each living unit.

TABLE 402.1.1g

[Distribution System Loss Factors]

| Duct Location | | |
|---|---|---|
| Mode | Outside | Inside |
| Heating | 0.75 | 1.00 |
| Cooling | 0.80 | 1.00 |

402.1.2 If the proposed design takes credit for reduced air changes per hour levels, documentation of measures providing such reduction, or results of a post-construction blower-door test shall be demonstrated using Standard RS–5 listed in section 801.

402.1.3 Passive solar building designs shall have fixed external shading, operable internal or external shading or other shading technologies to limit excessive summer cooling energy gains to the building interior.

402.1.4 Passive solar buildings shall utilize at least 919 kJ/°C (45 Btu/°F) of additional thermal mass, per m² (ft²) of added glass area, when added south-facing glass area exceeds 33% of the total glass area in walls.

402.1.5 Site Weather Data (constants).

402.1.5.1 The typical meteorological year (TMY), or its ''ersatz'' equivalent, from the National Oceanic and Atmospheric Administration (NOAA), or an approved equivalent, for the closest available location shall be used.

402.1.6 The HVAC System Efficiency, for heating and cooling mode, as identified in 10 CFR part 430 shall be proportionally adjusted for those portions of the ductwork located outside or inside the conditioned space using the values shown above, in accordance with equation 402.1a and table 402.1g:

(Equation 402.1.6a)

Total Adjusted System Efficiency=Equipment Efficiency × Distribution Loss Factor × percent of ducts outside+Equipment Efficiency × Distribution Loss Factor × percent of ducts inside.

402.1.7 Air infiltration. Air changes per hour for the standard design is 0.5 (for purposes of calculation only).

402.2 Design. The energy usage of the standard design and the proposed design shall be compared as follows:

(a) The comparison shall be expressed as joule per square meter (Btu input per square foot) of gross floor area per year at building site.

(b) If the proposed design results in an increase in usage of one energy source and a decrease in another energy source, even though similar sources are used for similar purposes, the difference in each energy source shall be converted to equivalent energy units for purposes of comparing the total energy used.

(c) The different energy sources shall be compared on the basis of energy use at the site where: 1 kWh=3,413 Btu.

402.3 Analysis procedure. The analysis of the annual energy usage of the standard design and the proposed design(s) shall meet the following criteria:

(a) The building heating/cooling load calculation procedure used for annual energy usage analysis shall be detailed enough to evaluate the effect of factors specified in section 402.4.

(b) The calculation procedure used to simulate the operation of the building and its service systems through a full-year operating period shall evaluate the effect of system design, climatic factors, operational characteristics, and mechanical equipment on annual energy usage. Manufacturer's data or comparable field test data shall be used when available in the simulation of systems and equipment. The calculation procedure shall be based upon 8,760 hours of operation of the building and its service systems and shall utilize the design methods specified in Standards RS–4, –6, and –7 listed in section 801.

402.4 Calculation procedures. The calculation procedure shall cover the following items:

(a) Design requirements—Environmental requirements as required in subpart C.

(b) Climatic data—Coincident hourly data for temperatures, solar radiation, wind and humidity of typical days in the year representing seasonal variation.

(c) Building data—Orientation, size, shape, mass, air, moisture and heat transfer characteristics.

(d) Operational characteristics—Temperature, humidity, ventilation, illumination, control mode for occupied and unoccupied hours.

(e) Mechanical equipment—Design capacity, part load profile.

(f) Building loads—Internal heat generation, lighting, equipment, number of people during occupied and unoccupied periods.

402.4.1 Use of approved calculation tool. The same calculation tool shall be used to estimate the annual energy usage for space heating and cooling of the standard design and the proposed design(s).

402.5 Documentation. Proposed design(s) shall have an energy analysis comparison report providing technical detail on the data used in and resulting from the comparative analysis to verify that both the analysis and the designs meet the criteria of section 401 of this part.

402.6 Exception. Proposed design(s) for one and two family dwellings and multifamily buildings having a conditioned floor area of 465 $m^2$ (5,000 $ft^2$) or less are exempted from performing an analysis on a full-year (8760 hours) basis as described in section 402.3(b). However, comparison of heating, cooling, and service water heating equipment energy usage between the proposed design(s) and the standard design shall be provided in accordance with the remaining provisions of section 402 of this part.

**§ 435.403 Renewable energy source analysis.**

403.1 General. A proposed building utilizing solar, geothermal, wind or other renewable energy sources for all or part of its energy source shall meet the requirements of section 402 of this part, except such renewable energy may be excluded from the total annual energy usage allowed for the building by that section.

403.1.1 To qualify for this exclusion such renewable energy must be derived from a specific collection, storage and distribution system. The solar energy passing through windows shall also be considered as qualifying if such windows are provided with:

(a) Operable insulating shutters or other devices which, when drawn or closed, shall cause the window area to reduce maximum outward heat flow rate to that specified in section 502.3.1; and

(b) The window areas are shaded or otherwise protected from direct rays of the sun during periods when mechanical cooling is required.

403.1.2 Exclusion shall also be granted for solar energy passing through windows provided:

(a) The glass is double or triple pane insulating glass with a low-emittance coating on one or more airspace surfaces of the glass, or with a low-emittance plastic film suspended in the airspace, and

(b) The glass areas are shaded from direct solar radiation during periods when mechanical cooling is required.

403.1.3 Other criteria covered in section 402 shall apply to the proposed design(s) utilizing renewable sources of energy.

403.2 Documentation. An annual energy analysis comparison shall be prepared comparing the proposed design(s) and the standard design as specified in section 402. The report shall provide technical detail on the building and system design(s) and on the data employed in the comparative analysis sufficient to verify that both the analysis and the proposed design(s) meet the criteria of sections 402 and 403 of this part.

403.2.1 The energy derived from renewable sources and the reduction in conventional energy requirements derived from nocturnal cooling shall be separately identified from the overall building energy use. Supporting documentation on the basis of the performance estimates for the renewable energy sources or nocturnal cooling shall be demonstrated in the building plans and specifications.

403.2.2 Energy usage must be calculated in accordance with the design conditions and methods specified in this part.

403.3 Exception. Proposed design(s) for buildings of less than 464$m^2$ (5,000 $ft^2$) of conditioned floor area that derive a minimum of 30% of their total annual energy usage from renewable sources or from nocturnal cooling are exempt from performing the analysis on a full-year (8,760 hours) basis as described in section 402.3(b). However, comparison of heating, cooling, and service water heating equipment energy usage between the proposed design(s) and the standard design shall be provided in accordance with the remaining provisions of sections 402 and 403 of this part.

403.4 Passive solar design analysis. Proposed design(s) using passive solar heating strategies, such as south window placement coupled with thermal mass, attached greenhouses or sunspaces, or Trombe walls, can be analyzed for annual heating and cooling loads using RS–8. Other methods for analysis of solar design strategies and equipment are permitted. Note that use of RS–8 provides information on building loads only; actual energy consumption depends on the equipment

proposed for installation in the building.

## Subpart E—Design by Component Performance Approach

### § 435.501 Scope.

501.1 General. This subpart establishes design requirements based on component performance for new Federal residential buildings. The design requirements established in subpart D may be applied in lieu of these requirements.

### § 435.502 Building thermal envelope requirements.

502.1 General. The building thermal envelope shall meet the requirements of table 502.1a. Compliance with these requirements shall be demonstrated in accordance with section 502.2. To demonstrate compliance, calculation procedures and information contained in RS–4, or laboratory test measurements obtained from test methods RS–9, –10, –11, or –12, or other documented procedures or information, shall be used.

502.1.1 The proposed design may include the use of thermal mass in the exterior walls when determining energy use. If the use of thermal mass is considered appropriate in the design of the exterior walls then the required $U_W$ for exterior walls, covered by section 502.2.1.1 and having a heat capacity greater than or equal to 123 kJ/m$^2$·°K (6 Btu/ft$^2$·°F), shall be less than or equal to the U-value determined by the applicable heating degree-days and low-mass-wall $U_W$ in tables 502.1b, 502.1c, or 502.1d. The column headings in tables 502.1b through 502.1d are the $U_W$'s, as determined by using equation 502.2a and Appendix Figure 1, for low-mass-walls; wall constructions having a heat capacity of less than 123 kJ/m$^2$·°K (6 Btu/ft$^2$·°F), as determined by equation 502.1a. The heat capacity of the wall shall be determined by using equation 502.1a below:

(Equation 502.1a)

$HC = w \times c$

where:

HC=heat capacity of the exterior wall, based on exterior surface area, W/(m$^2$·°K) [Btu/(ft2·°F)].

w=mass of the wall, based on exterior surface area, kg/m$^2$ (lb/ft$^2$).

c=specific heat of the exterior wall material, kJ/(kg·°K) [Btu/(lb·°F)].

The specific heat values shall be permitted to be obtained from Chapter 22 of Standard RS–4.

TABLE 502.1A [1]

| Element | Mode | Type A–1 buildings | Type A–2 buildings |
|---|---|---|---|
| Walls | Heating or cooling | $U_o \leq$ | $U_o \leq$ |
| Roof/Ceiling | Heating or cooling | $U_o \leq$ | $U_o \leq$ |
| Floors over unheated spaces | Heating or cooling | $U^o \leq$ | $U_o \leq$ |
| Heated slab on grade [2 5] | Heating | R≥ Depth ≥ in.[6] | R≥ Depth ≥ in.[6] |
| Unheating slab on grade [3 5] | Heating | R≥ Depth ≥ in.[6] | R≥ Depth ≥ in.[6] |
| Basement wall [4 5] | Heating or cooling | U≤ | U≤ |
| Crawl space wall [4 5] | Heating or cooling | U≤ | U≤ |

[1] Values shall be determined by using the graphs (Figures 1, 2, 3, 4, 5 and 6) contained in the Appendix of this part using heating degree days as specified in section 302.

[2] There are no insulation requirements for heated slabs in locations having less than 278 Celsius heating degree days (500 Fahrenheit HDD).

[3] There are no insulation requirements for unheated slabs in locations having less than 1,389 Celsius heating degree days (2,500 Fahrenheit HDD).

[4] Basement and crawl space wall U-values shall be based on the wall components and surface air films. Adjacent soil shall not be considered in the determination of the U-value.

[5] Typical foundation wall insulation techniques can be found in Standard RS–13.

[6] Depth of burial measured as described in section 502.2.1.4.

TABLE 502.1B.—REQUIRED $U_w$ FOR WALL WITH A HEAT CAPACITY EQUAL TO OR EXCEEDING 123 KJ/(M$^2$ · °K) [6 BTU/(FT$^2$ ·°F)] WITH INSULATION PLACED ON THE EXTERIOR OF THE WALL MASS

| Heating degree days 18.3 °C (65 °F) base | $U_W$ required for walls with a heat capacity less than 123 kJ/(m$^2$ · °K) [6 Btu/(ft$^2$ · °F)] as determined by using equation 502.2a and appendix figure 1 | | | | | | | | |
|---|---|---|---|---|---|---|---|---|---|
| | 1.13 (0.20) | 1.02 (0.18) | 0.90 (0.16) | 0.79 (0.14) | 0.68 (0.12) | 0.56 (0.10) | 0.45 (0.08) | 0.34 (0.06) | 0.22 (0.04) |
| 0–1111 | 1.59 | 1.47 | 1.30 | 1.19 | 1.02 | 0.90 | 0.73 | 0.62 | 0.45 |
| (0–2000) | (0.28) | (0.26) | (0.23) | (0.21) | (0.18) | (0.16) | (0.13) | (0.11) | (0.08) |
| 1112–2222 | 1.53 | 1.42 | 1.24 | 1.13 | 0.96 | 0.85 | 0.73 | 0.56 | 0.45 |
| (2001–4000) | (0.27) | (0.25) | (0.22) | (0.20) | (0.17) | (0.15) | (0.13) | (0.10) | (0.08) |
| 2223–3056 | 1.42 | 1.30 | 1.19 | 1.02 | 0.90 | 0.79 | 0.62 | 0.51 | 0.39 |
| (4001–5500) | (0.25) | (0.23) | (0.21) | (0.18) | (0.16) | (0.14) | (0.11) | (0.09) | (0.07) |
| 3056–3611 | 1.30 | 1.19 | 1.07 | 0.96 | 0.85 | 0.68 | 0.56 | 0.45 | 0.34 |
| (5501–6500) | (0.23) | (0.21) | (0.19) | (0.17) | (0.15) | (0.12) | (0.10) | (0.08) | (0.06) |
| 3612–4444 | 1.24 | 1.07 | 0.96 | 0.85 | 0.73 | 0.62 | 0.51 | 0.39 | 0.28 |
| (6501–8000) | (0.22) | (0.19) | (0.17) | (0.15) | (0.13) | (0.11) | (0.09) | (0.07) | (0.05) |
| >4445 | 1.13 | 1.02 | 0.90 | 0.79 | 0.68 | 0.56 | 0.45 | 0.34 | 0.22 |
| (>8001) | (0.20) | (0.18) | (0.16) | (0.14) | (0.12) | (0.10) | (0.08) | (0.06) | (0.04) |

TABLE 502.1C.—REQUIRED $U_w$ FOR WALL WITH A HEAT CAPACITY EQUAL TO OR EXCEEDING 123KJ/(M²·°K) [6BTU/(FT²·°F) WITH INSULATION PLACED ON THE INTERIOR OF THE WALL MASS

| Heating degree days 18.3°C (65°F) base | $U_w$ required for walls with a heat capacity less than 123 kJ/(m² · °K) [6 Btu/(ft² · °F)] as determined by using equation 502.2a and appendix figure 1 | | | | | | | | |
|---|---|---|---|---|---|---|---|---|---|
| | 1.13 (0.20) | 1.02 (0.18) | 0.90 (0.16) | 0.79 (0.14) | 0.68 (0.12) | 0.56 (0.10) | 0.45 (0.08) | 0.34 (0.06) | 0.22 (0.04) |
| 0–1111 | 1.42 | 1.24 | 1.13 | 0.96 | 0.85 | 0.68 | 0.51 | 0.39 | 0.22 |
| (0–2000) | (0.25) | (0.22) | (0.20) | (0.17) | (0.15) | (0.12) | (0.09) | (0.07) | (0.04) |
| 1112–2222 | 1.36 | 1.19 | 1.07 | 0.90 | 0.79 | 0.68 | 0.51 | 0.39 | 0.22 |
| (2001–4000) | (0.24) | (0.21) | (0.19) | (0.16) | (0.14) | (0.12) | (0.09) | (0.07) | (0.04) |
| 2223–3056 | 1.30 | 1.19 | 1.07 | 0.90 | 0.79 | 0.62 | 0.51 | 0.39 | 0.22 |
| (4001–5500) | (0.23) | (0.21) | (0.19) | (0.16) | (0.14) | (0.11) | (0.09) | (0.07) | (0.04) |
| 3056–3611 | 1.24 | 1.13 | 0.96 | 0.85 | 0.73 | 0.62 | 0.51 | 0.34 | 0.22 |
| (5501–6500) | (0.22) | (0.20) | (0.17) | (0.15) | (0.13) | (0.11) | (0.09) | (0.06) | (0.04) |
| 3612–4444 | 1.19 | 1.07 | 0.96 | 0.79 | 0.68 | 0.56 | 0.45 | 0.34 | 0.22 |
| (6501–8000) | (0.21) | (0.19) | (0.17) | (0.14) | (0.12) | (0.10) | (0.08) | (0.06) | (0.04) |
| >4445 | 1.13 | 1.02 | 0.90 | 0.79 | 0.68 | 0.56 | 0.45 | 0.34 | 0.22 |
| (>8001) | (0.20) | (0.18) | (0.16) | (0.14) | (0.12) | (0.10) | (0.08) | (0.06) | (0.04) |

TABLE 502.1D.—REQUIRED $U_w$ FOR WALL WITH A HEAT CAPACITY EQUAL TO OR EXCEEDING 123KJ/(M² · °K) [6BTU/(FT²·°F) WITH INTEGRAL INSULATION (INSULATION AND MASS MIXED, SUCH AS A LOG WALL)

| Heating degree days 18.3°C (65°F) base | $U_w$ required for walls with a heat capacity less than 123 kJ/(m² · °K) [6 Btu/(ft² · °F)] as determined by using equation 502.2a and appendix figure 1 | | | | | | | | |
|---|---|---|---|---|---|---|---|---|---|
| | 1.13 (0.20) | 1.02 (0.18) | 0.90 (0.16) | 0.79 (0.14) | 0.68 (0.12) | 0.56 (0.10) | 0.45 (0.08) | 0.34 (0.06) | 0.22 (0.04) |
| 0–1111 | 1.59 | 1.42 | 1.30 | 1.13 | 0.96 | 0.85 | 0.68 | 0.51 | 0.39 |
| (0–2000) | (0.28) | (0.25) | (0.23) | (0.20) | (0.17) | (0.15) | (0.12) | (0.09) | (0.07) |
| 1112–2222 | 1.53 | 1.36 | 1.24 | 1.07 | 0.96 | 0.79 | 0.62 | 0.51 | 0.34 |
| (2001–4000) | (0.27) | (0.24) | (0.22) | (0.19) | (0.17) | (0.14) | (0.11) | (0.09) | (0.06) |
| 2223–3056 | 1.47 | 1.30 | 1.19 | 1.02 | 0.90 | 0.73 | 0.62 | 0.45 | 0.34 |
| (4001–5500) | (0.26) | (0.23) | (0.21) | (0.18) | (0.16) | (0.13) | (0.11) | (0.08) | (0.06) |
| 3056–3611 | 1.36 | 1.19 | 1.07 | 0.96 | 0.79 | 0.68 | 0.56 | 0.45 | 0.28 |
| (5501–6500) | (0.24) | (0.21) | (0.19) | (0.17) | (0.14) | (0.12) | (1.10) | (0.08) | (0.05) |
| 3612–4444 | 1.24 | 1.13 | 1.02 | 0.85 | 0.73 | 0.62 | 0.51 | 0.39 | 0.28 |
| (6501–8000) | (0.22) | (0.20) | (0.18) | (0.15) | (0.13) | (0.11) | (0.09) | (0.07) | (0.05) |
| >4445 | 1.13 | 1.02 | 0.90 | 0.79 | 0.68 | 0.56 | 0.45 | 0.34 | 0.22 |
| (>8001) | (0.20) | (0.18) | (0.16) | (0.14) | (0.12) | (0.10) | (0.08) | (0.06) | (0.04) |

502.1.2 The design shall not create conditions of accelerated deterioration from moisture condensation. For frame walls, floors, and ceilings not ventilated to allow moisture to escape, an approved vapor retarder having a maximum perm rating of 57.4 ng/Pa·s·m² (1.0 perm), when tested in accordance with Standard RS–14, Procedure A, shall be installed on the warm-in-winter side of the thermal insulation.

502.1.3 Exceptions.

502.1.3.1 Buildings are exempt from the requirements of section 502.1.2 in construction where moisture or its freezing will not damage the materials.

502.1.3.2 Buildings are exempt from the requirements of section 502.1.2 in hot and humid climate areas where the following conditions occur:

(a) 19.4 °C (67 °F) or higher wet-bulb temperature for 3,000 or more hours during the warmest six consecutive months of the year, and/or

(b) 22.8 °C (73 °F) or higher wet-bulb temperature for 1,500 or more hours during the warmest six consecutive months of the year.

502.1.4 Access openings. Access doors, hatches, scuttles, pull-down staircases and similar constructions separating a conditioned from an unconditioned space shall be weatherstripped along the surfaces that seal to the surrounding fixed frame. The access opening shall be insulated to a level equivalent to the insulation of the surrounding floor, wall, and ceiling.

502.1.4.1 Exception. If the access opening is uninsulated, the U-value of the surrounding floor, wall, and ceiling shall be decreased in accordance with equations 502.2a, 502.2b, 502.2c, or 502.2d, as appropriate.

502.1.5 Masonry Veneer. When insulation is placed on a foundation wall, and part of the foundation wall supports a masonry veneer for the exterior wall, the horizontal portion of the foundation supporting the veneer need not be insulated.

502.2 Heating and cooling criteria.

502.2.1 Compliance by performance on an individual component basis. Each component of the building envelope shall meet the provisions of table 502.1a as provided in sections 502.2.1.1—502.2.1.6.

502.2.1.1 Walls.

502.2.1.1.1 Conventional framing. The combined thermal transmittance value ($U_O$) of the gross area of exterior walls shall not exceed the value given in table 502.1a. Equation 502.2a shall be used to determine acceptable combinations to meet this requirement.

$$U_o = \frac{(U_w A_w) + (U_g A_g) + (U_d A_d)}{A_o} \quad \text{(Equation 502.2a)}$$

where:

$U_o$=the average thermal transmittance of the gross area of exterior walls.

$A_o$=the gross area of exterior walls.

$U_w$=the combined thermal transmittance of the various paths of heat transfer through the opaque exterior wall area.

$A_w$=area of exterior wall that is opaque.

$U_g$=the thermal transmittance of the area of all windows within the gross wall area as determined in accordance with section 102.3 of this part.

$A_g$=the area of all windows within the gross wall area.

$U_d$=the thermal transmittance of the area of all doors within the gross wall area as determined in accordance with section 102.3 of this part.

$A_d$=the area of all doors within the gross wall area.

When more than one type of wall, window, or door is used, the U × A term for that item shall be expanded into sub-elements as:

$U_w A_w = (U_{w1} A_{w1}) + (U_{w2} A_{w2}) + (U_{w3} A_{w3}) + \ldots$ (etc.)

502.2.1.1.2 Metal framing. When exterior walls are framed with metal studs, calculate the value of $U_w$ used in equation 502.2b as follows:

where:

$R_s$=the total thermal resistance of the elements, in series along the path comprising the wall assembly of heat transfer, excluding the cavity insulation and the metal stud.

$R_{ins}$=the R value of the cavity insulation

$F_c$=the correction factor listed in Appendix table 502.2.1.1.2.

$$U_w = \frac{1}{R_s + (R_{ins} \times F_c)} \quad \text{(Equation 502.2b)}$$

502.2.1.1.3 Any vertical glazing assemblies or vertical walls that form part of a roof assembly that bounds conditioned space, such as clerestories and dormers, shall be treated as part of the exterior wall area for purposes of complying with this part.

502.2.1.2 Roof/ceiling. The combined thermal transmittance value (UO) of the gross area of the roof or ceiling assembly shall not exceed the value given in table 502.1a. Equation 502.2c shall be used to determine acceptable combinations to meet this requirement.

$$U_O = \frac{(U_R \times A_R) + (U_S \times A_S)}{A_O} \quad \text{(Equation 502.2c)}$$

where:

$U_o$=the average thermal transmittance of the gross roof/ceiling area.

$A_o$=the gross area of the roof/ceiling assembly.

$U_R$=the thermal transmittance of all elements of the opaque roof/ceiling area.

$A_R$=area of the opaque roof/ceiling assembly.

$U_s$=the thermal transmittance of the area of all skylight elements in the roof/ceiling assembly as determined in accordance with section 102.3 of this part.

$A_s$=the area (including frame) of all skylights within the roof/ceiling assembly.

When more than one type of roof/ceiling or skylight is used, the U × A term for that item shall be expanded into its sub-elements, as:

$U_R \times A_R = (U_{R1} \times A_{R1}) + (U_{R2} \times A_{R2}) + \ldots$etc.

502.2.1.2.1 When return air ceiling plenums are employed, the roof/ceiling assembly shall:

(a) For thermal transmittance purposes, not include the ceiling proper nor the plenum space as part of the assembly and, b) For gross area purposes, be based upon the interior face of the upper plenum surface.

502.2.1.3 Floors over unheated spaces. The combined thermal transmittance value ($U_O$) of the gross area of floors over unheated spaces shall not exceed the value given in table 502.1a. The thermal transmittance requirement of this section does not apply to floors over unvented crawl spaces and basements if the requirements of section 502.2.1.5 and/or 502.2.1.6 are met. For floors over outdoor air, e.g., overhangs, the $U_O$ value shall meet the same requirement shown for roofs in table 502.1a. Equation 502.2d shall be used to determine acceptable combinations to meet this requirement.

$$U_O = \frac{(U_{f1} \times A_{f1}) + (U_{f2} \times A_{f2}) + \ldots (U_{fn} A_{fn})}{A_O} \quad \text{(Equation 502.2d)}$$

where:

$U_O$=the combined thermal transmittance of the different floor assemblies.

$A_O$=the gross area of all floor assemblies.

$U_{1,\ldots,n}$=the thermal transmittance of the various heat transfer paths through the first (or nth) floor assembly.

$A_{f1,\ldots,fn}$=the area of the first (or nth) floor assembly.

502.2.1.4 Slab-on-grade floors. For slab-on-grade floors, the thermal resistance of the insulation around the perimeter of the floor shall not be less than the value given in table 502.1a. Insulation shall be placed on the outside

of the foundation or on the inside of the foundation wall. In climates below 3,333 annual Celsius heating degree days (HDD) (6,000 annual Fahrenheit HDD), the insulation shall extend downward from the top of the slab for a minimum distance of 0.610 m (24 in.) or downward to at least the bottom of the slab and then horizontally to the interior or exterior for a minimum total distance of 0.610 m (24 in.) and shall be designed for ground contact. In climates equal to or greater than 3,333 annual Celsius heating degree days (HDD) (6,000 annual Fahrenheit HDD), the insulation shall extend downward from the top of the slab for a minimum of 1.22 m (48 in.) or downward to at least the bottom of the slab and then horizontally to the interior or exterior for a minimum total distance of 1.22 m (48 in.). In all climates, horizontal insulation extending outside of the foundation shall be covered by pavement or soil a minimum of 0.254 m (10 in.) thick. If the insulation is placed to the inside of the foundation wall, there must be insulation placed between the slab and the foundation wall. The top edge of the insulation installed between the exterior wall and the edge of the interior slab shall be permitted to be cut at a 45° angle away from the exterior wall.

502.2.1.5 Crawl space walls. If the floor above a crawl space does not meet the requirements of section 502.2.1.3 and the crawl space does not have ventilation openings that communicate directly with outside air, then the exterior walls of the crawl space shall have a thermal transmittance value not exceeding the value given in table 502.1a. Where the inside ground surface is less than 0.305 m (12 in.) below the outside finish ground level or the vertical wall insulation stops less than 0.305 m (12 in.) below the outside finish ground level, crawl space wall insulation shall extend vertically and horizontally a minimum total distance of 0.610 m (24 in.) linearly from the outside finish ground level (see RS–13).

502.2.1.6 Basement walls. The exterior walls of basements below uninsulated floors shall have a thermal transmittance value not exceeding the value given in table 502.1a from the top of the basement wall to a depth of 3.05 m (10 ft) below the outside finish ground level, or to the level of the basement floor, whichever is less.

502.2.2 Compliance by whole building performance. The stated $U_O$, U, or R value of an assembly may be increased or decreased, provided the total heat gain or loss for the entire building does not exceed the total resulting from conformance to the values specified in table 502.1a.

502.3 Air leakage.

502.3.1 Window and door assemblies. Window and door assemblies installed in the building envelope shall comply with the maximum infiltration rates allowed in RS–15, –16, –17, –18, and –19.

502.3.1.1 Exception. Site-constructed windows and doors shall be sealed in accordance with section 502.3.2.

502.3.2 Caulking and sealants. Joints, openings, and penetrations in the building envelope that are sources of air leakage shall be sealed with caulking, gasketing, weather-stripping, house wrap, or other materials compatible with the construction materials, location, and anticipated conditions. Sealants used in joints between dissimilar materials shall allow for differential expansion and contraction of such materials.

502.3.3 Recessed lighting fixtures. When installed in the building envelope, recessed lighting fixtures shall meet one of the following requirements:

(a) Type IC rated, manufactured with no penetrations between the inside of the recessed fixture and the ceiling cavity, and sealed or gasketed to prevent air leakage into the unconditioned space.

(b) Type IC or non-IC rated, installed inside a sealed box constructed from a minimum 0.013-m (½-in.) thick gypsum wallboard, a preformed polymeric vapor barrier, or other air-tight assembly manufactured for this purpose. The fixture shall maintain a 0.013-m (½-in.) minimum clearance from combustible material and 0.064 m (3 in.) minimum clearance from insulation material.

(c) Type IC rated in accordance with RS–15 with no more than 0.944 L/s (2.0 cfm) air movement from the conditioned space to the ceiling cavity. The fixture shall be tested at 75 Pascals or 1.57 psf pressure differential and shall be labeled.

**§ 435.503 Building mechanical systems and equipment.**

503.1 General. This section covers mechanical systems and equipment used to provide heating, ventilating, and air-conditioning functions.

503.2 Mechanical equipment efficiency. Mechanical equipment used to provide heating and air-conditioning functions shall be selected pursuant to the following:

503.2.1 Detached one and two family dwellings. Heating and air-conditioning equipment selection shall comply with section 503.2.1.1 or section 503.2.1.2.

503.2.1.1 Minimum federal standards. The installed equipment type shall have the lowest life-cycle cost of all the applicable equipment included in table 503.2, when those equipment types have been evaluated at the minimum equipment performance efficiency allowed under Federal standards as specified in 10 CFR part 430.

503.2.1.2 Alternative approach. Any equipment that is at least as life-cycle cost-effective as the equipment identified in section 503.2.1.1 may be installed.

503.2.1.3 When either the selected equipment or the equipment identified in table 503.2 to which it is compared provides both heating and cooling, the life-cycle cost comparison shall be based on the combined life-cycle cost of providing heating and cooling services. Otherwise, separate heating and cooling life-cycle cost comparisons shall be made.

503.2.1.4 All such equipment shall be installed in accordance with the manufacturer's instructions.

TABLE 503.2.—MECHANICAL EQUIPMENT REGULATED BY FEDERAL LAW

| | |
|---|---|
| Heat pump [1] or air conditioner; air, water or evaporatively cooled | <70,320 kW (<240,000 Btu/h) |
| Packaged Terminal Air Conditioner or Heat Pump. | All Capacities. |
| Warm Air Furnaces, Gas and Oil-Fired. | All Capacities. |
| Boilers, Gas-and Oil-Fired. | All Capacities. |

[1] Does not include ground-water source heat pumps.

503.2.2 Central heating and air-conditioning units for multiple dwelling units in multi-family low rise dwellings. Heating and air-conditioning equipment selection shall comply with section 503.2.2.1 or section 503.2.2.2.

503.2.2.1 Equipment covered by RS–20. The installed equipment type shall have the lowest life-cycle cost of all the applicable equipment included in table 403.1 of RS–20, when those equipment types have been evaluated at the minimum equipment performance efficiency allowed by table 403.1 of RS–20 for the capacity required.

503.2.2.2 Alternative approach. Any equipment that is at least as life-cycle cost-effective as the equipment identified in section 503.2.2.1 may be installed.

503.2.2.3 When either the selected equipment or the equipment identified

in table 403.1 of RS–20 to which it is compared provides both heating and cooling, the life-cycle cost comparison shall be based on the combined life-cycle cost of providing heating and cooling services. Otherwise, separate heating and cooling life-cycle cost comparisons shall be made.

503.2.2.4 All such equipment shall be installed in accordance with the manufacturer's instructions.

503.3 HVAC systems.

503.3.1 Load calculations. Heating and cooling system design loads for the purpose of sizing systems and equipment shall be determined in accordance with the procedures described in RS–4, or an equivalent computation procedure, using the design parameters specified in section 302 of this part. Design loads shall account for infiltration.

503.3.1.1 Heating and cooling equipment capacity.

503.3.1.2 Heating equipment. The capacity of the equipment shall not exceed 170% of the design load.

503.3.1.3 Exception. Power burner and induced-draft burner fossil fuel heating equipment.

503.3.2 Cooling-only equipment. Equipment capable of providing only cooling shall be selected so the sensible capacity of the equipment is not less than the calculated total sensible cooling load but not more than 125% of the design sensible load or the closest available size provided by the manufacturer. The corresponding latent capacity of the equipment shall not be less than the calculated latent load.

503.3.3 Heat pump equipment. Heat pump sizing shall be based on the cooling design requirements and shall not exceed 125% of the cooling load at design conditions. For variable-speed or multiple-speed units, the cooling capacity at the lowest speed shall not exceed 125% of the cooling load at design conditions. Alternatively, where these data are not available for design temperatures, the capacity at the design heating temperature may be determined by interpolation or extrapolation of manufacturers' performance data. The auxiliary electric resistance heat capacity shall not exceed 120% of the design heating requirement.

503.3.4 Central electric furnace. Central electric furnaces shall be installed within the conditioned space unless they are specifically designed for use outside the conditioned space. Such furnaces greater than 12 kW (3.42 tons) shall be divided into at least two stages. An electric heat pump or an off-peak electric heating system with thermal storage shall be installed in conjunction with the furnace for locations with 111 HDD, base 18.3 °C (200 HDD, base 65 °F) or more.

503.4 Temperature and humidity controls.

503.4.1 System controls. Each dwelling unit shall be considered a zone and be provided with thermostatic controls responding to temperature within the dwelling unit. Each heating and cooling system shall include at least one temperature control device. Where a dwelling unit is served by more than one system, the thermostatic controls of each system shall prevent simultaneous operation in different modes.

503.4.2 Thermostatic control capabilities. Where used to control comfort heating, thermostatic controls shall be capable of being set locally or remotely by adjustment or selection of sensors down to 12.9 °C (55 °F) or lower.

503.4.2.1 Where used to control comfort cooling, thermostatic controls shall be capable of being set locally or remotely by adjustment or selection of sensors up to 29.4 °C (85 °F) or higher.

503.4.2.2 Where used to control both comfort heating and cooling, thermostatic controls shall be capable of providing a temperature range or deadband of up to 5.6 °C (10 °F) or more within which the supply of heating and cooling energy is shut off or reduced to a minimum.

503.4.2.2.1 Exception. Thermostats that require manual changeover between heating and cooling modes.

503.4.3 Heat pump supplementary heater. The heat pump shall be installed with controls to prevent supplementary heater operation when the operating load can be met by the heat pump alone. Supplementary heater operation is permitted during transient periods, such as start-ups, following room thermostat set-point advance, and during defrost.

503.4.4 Humidistat. Humidistats used for comfort purposes shall be capable of being set to prevent the use of fossil fuel or electricity to reduce relative humidity below 60% when reducing moisture or to increase relative humidity above 30% when adding moisture.

503.5 Distribution system construction and insulation.

503.5.1 Piping insulation. All HVAC system piping shall be thermally insulated in accordance with table 503.5.1a.

503.5.1.1 Exceptions.

(a) Factory-installed piping within HVAC equipment tested and rated in accordance with section 503.2.

(b) Piping that conveys fluids which have a design operating temperature range between 12.8 °C (55 °F) and 48.9 °C (120 °F).

(c) When the heat loss and/or heat gain of the piping without insulation does not increase the energy requirement of the building.

(d) When the piping is installed in basements, cellars, or unventilated crawl spaces having insulated walls.

(e) When additional insulation or vapor barriers have been specified to prevent condensation.

TABLE 503.5.1A.—MINIMUM PIPE INSULATION [THICKNESS IN METERS (INCHES)] [3]

| Piping system types | Fluid temperature range, °C (°F) | Pipe sizes [2] | | | | | |
|---|---|---|---|---|---|---|---|
| | | Run outs 0.051 m (2 in.)[1] | 0.025 m (1 in.) and less | 0.032 to 0.051 m (1.25 to 2 in.) | 0.064 to 0.102 m (2.5 to 4 in.) | 0.127 to 0.152 m (5 to 6 in.) | 0.203 m (8 in.) and larger |
| **Heating Systems Steam and Hot Water** | | | | | | | |
| High pressure/ temperature. | 152.2–232.2 | 0.038 | 0.064 | 0.064 | 0.076 | 0.089 | 0.089 |
| | (306–450) | (1.5) | (2.5) | (2.5) | (3) | (3.5) | (3.5) |
| Medium pressure/ temperature. | 121.7–151.7 | 0.038 | 0.051 | 0.064 | 0.064 | 0.076 | 0.076 |
| | (251–305) | (1.5) | (2) | (2.5) | (2.5) | (3) | (3) |
| Low pressure/ temperature. | 93.9–121.1 | 0.025 | 0.038 | 0.038 | 0.051 | 0.051 | 0.051 |
| | (201–250) | (1) | (1.5) | (1.5) | (2) | (2) | (2) |
| Low temperature | 48.9–93.3 | 0.013 | 0.025 | 0.025 | 0.038 | 0.038 | 0.038 |

TABLE 503.5.1A.—MINIMUM PIPE INSULATION [THICKNESS IN METERS (INCHES)] [3]—Continued

| Piping system types | Fluid temperature range, °C (°F) | Pipe sizes [2] | | | | | |
|---|---|---|---|---|---|---|---|
| | | Run outs 0.051 m (2 in.)[1] | 0.025 m (1 in.) and less | 0.032 to 0.051 m (1.25 to 2 in.) | 0.064 to 0.102 m (2.5 to 4 in.) | 0.127 to 0.152 m (5 to 6 in.) | 0.203 m (8 in.) and larger |
| Steam condensate (for feed water). | (120–200) | (0.5) | (1) | (1) | (1.5) | (1.5) | (1.5) |
| | Any | 0.025 | 0.025 | 0.038 | 0.051 | 0.051 | 0.051 |
| | | (1) | (1) | (1.5) | (2) | (2) | (2) |
| **Cooling Systems** | | | | | | | |
| Chilled water | 4.4–12.8 | 0.013 | 0.013 | 0.019 | 0.025 | 0.025 | 0.025 |
| | (40–55) | (0.5) | (0.5) | (0.75) | (1) | (1) | (1) |
| Refrigerant, or brine | Below 4.4 | 0.025 | 0.025 | 0.038 | 0.038 | 0.038 | 0.038 |
| | (40) | (1) | (1) | (1.5) | (1.5) | (1.5) | (1.5) |

[1] Runouts not exceeding 3.66 m (12 ft) in length to individual terminal units.
[2] For piping exposed to outdoor air, increase insulation thickness by 0.0127 m (0.5 in.).
[3] Insulation thicknesses are based on insulation having thermal resistivity in the range of 27.7 to 31.9 ($m^2$.°C)/W per meter [4.0 to 4.6 h.$ft^2$.°F/Btu per inch] of thickness on a flat surface at a mean temperature of 23.9°C (75°F).

503.5.1.2 For materials with thermal resistivity greater than 0.81 (4.6), the minimum insulation thickness may be reduced as determined by equation 503.5.1.2a:

$$\frac{0.81\ (4.6) \times \text{Table 503.3.3.1 Thickness}}{\text{Actual Resistivity}} = \text{New Minimum Thickness} \quad \text{(Equation 503.5.1.2a)}$$

503.5.1.3 For materials with thermal resistivity less than 0.71 (4.0), the minimum insulation thickness shall be increased as determined by equation 503.5.1.2b:

$$\frac{0.71\ (4.0) \times \text{Table 503.5.1a Thickness}}{\text{Actual Resistivity}} = \text{New Minimum Thickness} \quad \text{(Equation 503.5.1.2b)}$$

**503.5.2 [RESERVED]**

**503.5.3 [RESERVED]**

**503.5.4 [RESERVED]**

**503.5.5 [RESERVED]**

503.5.6 Duct system insulation. All supply and return air ducts and plenums installed as part of an HVAC air distribution system shall be insulated to provide a thermal resistance, excluding film resistances, to that value determined by equation 503.5.6a:

$$R = \frac{\Delta t}{47.3} m^2 \cdot K/W = \frac{\Delta t}{15} h \cdot ft^2 \cdot {}^\circ F/Btu \quad \text{(Equation 503.5.6a)}$$

Where $\Delta$ t= the design temperature difference between the air in the duct and the temperature of the ambient air in contact with the exterior duct surface.

503.5.6.1 Exceptions. Duct insulation, except as required to prevent condensation, is not required in the following cases:

(a) When $\Delta$ t is 13.9 °C (25 °F) or less.

(b) When supply-or return-air ducts are installed in basements, cellars, or unventilated crawl spaces having insulated walls in one-and two-family dwellings.

(c) When the heat gain or loss of the ducts, without insulation, will not increase the energy requirements of the building.

(d) Within HVAC equipment.

(e) Exhaust air ducts.

503.5.6.2 For buildings with uninsulated roofs over attics containing ducts, the air temperature shown in table 503.5.6.2 shall be used.

TABLE 503.5.6.2.—ATTIC TEMPERATURES

| Seasonal conditions | Temperature |
|---|---|
| Summer conditions: | |
| Roof slope: | |
| 5 in 12 and up | 54.4 °C (130 °F). |
| 3 in 12 to 5 in 12 | 60.0 °C (140 °F). |
| less than 3 in 12 | 65.6 °C (150 °F). |
| Winter conditions all slopes. | 5.56 °C (10 °F) above outdoor design. |

503.5.7 Duct construction. Ductwork shall be constructed and erected in accordance with Standards RS–6, RS–21, RS–22, RS–23, or RS–24 listed in section 801 of this part or in accordance with the construction documents.

503.5.7.1 Duct testing. High-pressure and medium-pressure ducts shall be leak tested in accordance with the applicable standards in section 801 of this part with the rate of air leakage not to exceed the maximum rate specified in that standard.

503.5.7.2 Duct sealing. All low-pressure supply and return air ducts, including those that are created within stud bays or joist cavities by covering with sheet metal, shall be sealed using mastic with fibrous backing tape installed according to the manufacturer's specifications. Other sealants may be specified if their

performance can be demonstrated to equal or exceed that of mastic with fibrous backing tape. For fibrous glass ductwork, pressure-sensitive tape may be used if installed in accordance with RS–24. Duct tape is not permitted as a sealant on any ducts.

503.5.8 Mechanical ventilation. Each mechanical ventilation system (supply and/or exhaust) shall be equipped with a readily accessible switch or other means for shutoff or volume reduction and shutoff when ventilation is not required. Automatic or gravity dampers that close when the system is not operating shall be provided for outdoor air intakes and exhausts.

503.5.9 Combustion air. Each combustion device shall be properly installed and provided with a sufficient air supply to meet the air flow requirements for that device. For any fuel-burning equipment installed in the dwelling unit, combustion zone depressurization shall not exceed the equipment's depressurization limit.

503.5.9.1 Backdrafting test. Dwelling units that have installed combustion appliances requiring a vent pipe or chimney (including gas clothes dryers, water heaters, furnaces, fireplaces, and wood stoves) shall be tested for depressurization-induced chimney failure (backdrafting) in accordance with RS–25. If backdrafting occurs, the cause of insufficient make-up air shall be identified and corrected before occupancy. Testing is not required if the combustion air is supplied directly from the outdoors to the combustion chamber via a sealed passageway, and the products of combustion are exhausted directly outdoors through an independent sealed vent.

503.5.9.2 Combustion air supplies. Any duct, pipe, screened opening or other construction feature which serves to provide combustion air to fossil-fuel burning appliances, including service water heaters, shall be prominently labeled in a readily accessible location directly on or immediately adjacent to the construction feature. The label shall contain the following statement, or words conveying a similar intent:

> Warning: This pipe [duct, vent, etc.] has been installed to provide combustion air for an appliance that burns natural gas, propane gas, fuel oil, or any solid fuel. It should not be modified or obstructed in any way, without first consulting a qualified HVAC contractor or your local building department. Obstruction or improper modification may cause toxic combustion products to be drawn into the living space of the home.

503.5.10 Transport energy. The air transport factor for each all-air system shall be not less than 5.5 when calculated in accordance with equation 503.5.10a. The factor shall be based on design system air flow. Energy for transfer of air through heat recovery devices shall not be included in determining the factor.

$$\text{Air Transport Factor} = \frac{\text{Space Sensible Heat Load Removal Rate}^{1}}{\text{Supply} + \text{Return Fan(s) Power Input}^{1}} \quad \text{(Equation 503.5.10a)}$$

[1] Expressed in watts (Btu/h).

503.5.10.1 For purposes of these calculations, Space Sensible Heat Load Removal Rate is equivalent to the maximum coincident design sensible cooling load of all spaces served for which the system provides cooling. Fan Power Input is the rate of energy delivered to the fan prime mover.

503.5.10.2 Air and water, all-water and unitary systems employing chilled, hot, dual-temperature or condenser water-transport systems to space terminals shall not require greater transport energy (including central and terminal fan power and pump power) than an equivalent all-air system providing the same space sensible heat removal and having an air transport factor not less than 5.5.

503.5.11 Balancing. The HVAC system design shall provide means for balancing air and water systems. Components for balancing include dampers, temperature and pressure test connections, and balancing valves.

**§ 435.504 Service water heating.**

504.1 General. The purpose of this section is to provide criteria for design and equipment selection that will produce energy savings when applied to service water heating. Water supplies to ice-making machines and refrigerators shall be taken from a cold-water line of the water distribution system.

504.2 Performance efficiency. Mechanical equipment used to provide residential service water heating functions shall be selected pursuant to the following:

504.2.1 Detached one and two family dwellings. Service water heating equipment selection shall comply with section 504.2.1.1 or section 504.2.1.2.

504.2.1.1 Minimum federal standards. The installed equipment type shall have the lowest life-cycle cost of all the applicable equipment included in section 430.32(d) of 10 CFR part 430, Subpart C, when those equipment types have been evaluated at the minimum equipment performance efficiency allowed under Federal standards as specified in 10 CFR part 430.

504.2.1.2 Alternative approach. Any equipment that is at least as life-cycle cost-effective as the equipment identified in section 504.2.1.1 may be installed.

504.2.1.3 When either the selected equipment or the equipment identified in section 403.32(d) of 10 CFR part 430, Subpart C to which it is compared provides heating or cooling to the conditioned space of the building, in addition to service water heating, the life-cycle cost comparison shall be based on the combined life-cycle cost of providing service water heating and the heating or cooling service. Otherwise, separate life-cycle cost comparisons shall be made.

504.2.1.4 All such equipment shall be installed in accordance with the manufacturer's instructions.

504.2.2 Service water heating units for multiple dwelling units in multi-family low rise dwellings. Service water heating equipment selection shall comply with section 504.2.2.1 or section 504.2.2.2.

504.2.2.1 Equipment covered by RS–20. The installed equipment type shall have the lowest life-cycle cost of all the applicable equipment included in table 404.1 of RS–20, when those equipment types have been evaluated at the minimum equipment performance efficiency allowed by table 404.1 of RS–20.

504.2.2.2 Alternative approach. Any equipment that is at least as life-cycle cost-effective as the equipment identified in section 504.2.2.1 may be installed.

504.2.2.3 When either the selected equipment or the equipment identified in table 404.1 of RS–20 to which it is compared provides heating or cooling to the conditioned space of the building, in addition to service water heating, the life-cycle cost comparison shall be based on the combined life-cycle cost of providing service water heating and heating or cooling service. Otherwise,

separate life-cycle cost comparisons shall be made.

504.2.2.4 All such equipment shall be installed in accordance with the manufacturer's instructions.

504.3 Combination service water heating and space heating equipment. Equipment shall not be used to serve both space heating and service water heating unless: the annual space heating energy is less than 50% of the annual service water heating energy; the energy input or storage volume of the combined space heating equipment and water heater is less than twice the energy input or storage volume of the smaller of the separate space heating equipment or water heaters otherwise required; or the input to the combined equipment is less than 43.95 kW (150,000 Btu/h).

504.4 Heat traps. Water heaters with vertical pipe risers shall have a heat trap installed on both the inlet and outlet of the water heater unless the water heater has an integral heat trap or is part of a circulating system.

504.5 Automatic controls. Service water-heating systems shall be equipped with automatic temperature controls capable of maintaining a pre-selected temperature. The control shall be preselected to a temperature of 60 °C (140 °F) or less.

504.6 Shutdown. A separate switch shall be provided to permit turning off the energy supplied to electric service water-heating systems. A separate valve shall be provided to permit turning off the energy supplied to the main burner(s) of all other types of service water-heating systems.

504.7 Pump operation. Circulating hot-water systems shall be arranged so that the circulation pump(s) can be conveniently turned off, automatically or manually, when the hot-water heater is not in operation.

504.8 Pipe insulation. For recirculating systems, piping heat loss shall be limited to a maximum of 5.13 W (17.5 Btu/h) per linear foot of pipe by insulating in accordance with table 504.8a. Table 504.8a is based on a design temperature external to the system piping of 18.3 °C (65 °F) minimum. Lower design temperatures shall require recalculation of the required piping insulation to limit heat loss to the above amount.

504.8.1 Exception. Piping insulation is not required when the heat loss of the piping, without insulation, does not increase the annual energy requirements of the building.

TABLE 504.8a.—MINIMUM PIPE INSULATION [2]

[Thickness in meters (inches)]

| Service water heating temperatures °C (°F) | Pipe sizes [1] | | | |
|---|---|---|---|---|
| | Noncirculating runouts | Circulating mains and runouts | | |
| | Up to 0.025 m (1 in.) | Up to 0.032 m (1.25 in.) | 0.038–0.051 m (1.5–2 in.) | Over 0.051 m (2 in.) |
| 76.7–82.2 (170–180) | 0.013 (0.5) | 0.025 (1.0) | 0.038 (1.5) | 0.051 (2.0) |
| 60.0–71.1 (140–160) | 0.013 (0.5) | 0.013 (0.5) | 0.025 (1.0) | 0.038 (1.5) |
| 37.8–54.4 (100–130) | 0.013 (0.5) | 0.013 (0.5) | 0.013 (0.5) | 0.025 (1.0) |

[1] Nominal iron pipe size and insulation thickness.
[2] See footnote 3 from table 503.5.1a.

**§ 435.505 Electrical power and lighting.**

505.1 Electrical energy consumption. Each separate dwelling unit of multifamily residential buildings shall be individually metered.

505.1.1 Exception. Transient facilities such as dormitories and bachelors' quarters are exempt from the requirements of section 505.1.

505.2 Lighting power budget. The lighting system of the non-dwelling portion of multi-family residences, such as common stairwells and corridors, shall meet the applicable lighting provisions of RS–20.

## Subpart F—[Reserved]

## Subpart G—Radon Control

**§ 435.701 General.**

This subpart provides minimum requirements for the control of radon from the ground and from construction materials associated with buildings. This subpart does not provide requirements for the control of radon from ground water or drinking water.

**§ 435.702 Scope.**

702.1 Building types. These radon control provisions apply to new Federal residential buildings, additions to the foundations of such buildings, and renovations to such buildings where the foundation wall will be exposed.

702.1.2 Exception. Three story multifamily residential buildings that have dwelling units only on the third floor are exempt from the requirements of this subpart.

702.2 Building locations. This subpart applies to any new construction located completely or partially in Zone 1 on the U.S. Map of Radon Zones as specified in Appendix table 702.2. This subpart shall also apply when locally available data, or a radon potential map derived from non-local data, indicate a particular site may have a radon potential commensurate with that in Zone 1, although not listed in Appendix table 702.2 as being in Zone 1.

702.2.1 Exception. Where measured data collected at or near to the proposed construction site, or a radon potential map derived from non-local data, indicate the construction site does not have a radon potential commensurate with that in Zone 1, the provisions of this subpart shall not apply.

**§ 435.703 Compliance.**

703.1 General. Buildings located in areas classified as Zone 1 as defined in section 702.2 shall comply with the design and construction requirements provided in section 707.

703.2 Long-term testing. Starting within 30 days after occupancy, the building shall be tested for an integration period no less than six months in accordance with RS–26. If the radon level is at or above 4 pCi/L, the radon ventilation system shall be activated in accordance with RS–27 within one month of the completion of testing.

703.3 Short-term testing. Short-term testing shall be performed and concluded within 30 days of occupancy for an integration period no less than 7 days in accordance with RS–26. If the radon level is at or above 20 pCi/L, a second short-term test shall be performed for a minimum of 7 days beginning at the conclusion of the first short-term test. If the average of the two

tests exceeds 20 pCi/L, the radon ventilation system shall be activated.

703.4 Follow-up testing.

703.4.1 Radon testing; short-term. If the ventilation system has been activated in response to long-term or short-term testing, additional radon testing shall be completed within 10 days of system activation for a minimum integration period of two days. If the test results exceed 4 pCi/L, additional radon mitigation measures shall be performed. After mitigation, any further testing shall be performed.

703.4.2 Radon testing; long-term. If the results of short-term testing performed under section 703.4.1 are 4 pCi/L or less, the long-term testing required under section 703.2 shall be re-initiated upon conclusion of the short-term test for an integration period no less than 6 months. If the test results exceed 4 pCi/l, additional radon mitigation shall be performed. After mitigation, any further testing shall be performed.

703.4.3 Backdrafting testing. If the ventilation system has been activated in response to long-term or short-term testing, additional backdrafting testing shall be performed, in accordance with the provisions of section 503.5.9.1, within 30 days of system activation.

703.5 Reporting of test results. All radon test results shall be reported to the Deputy Assistant Secretary for Building Technologies (EE–40) at the U.S. Department of Energy, Washington, DC 20585.

703.6 Ventilation fan alarm. If the radon ventilation fan has been activated in response to testing under this section, a visual indication of fan operation, or an alarm indicating fan failure, shall be installed within the living space of the dwelling unit.

**§ 435.704 Alternative systems.**

The requirements of this subpart are not intended to preempt, preclude, or restrict the application or use of alternative materials, systems, or construction practices. Alternative materials, systems, or methods of construction shall be acceptable when they can be shown to yield radon control equivalent to that required herein. To be considered equivalent, a radon level below 4 pCi/L shall be demonstrated through long-term testing conducted on a similar building (design with similar environmental conditions and operational schedules) located in the same radon potential zone, using the proposed alternative approaches. Any alternative system is still subject to the testing and reporting requirements of section 703.

**§ 435.705 Conflict with other standards, codes, or regulations.**

The provisions of this subpart are not intended to conflict with other health and safety provisions of any other applicable standards, codes, or regulations. When a conflict occurs, the requirement with the greater positive impact on the health and safety of the building occupants shall prevail.

**§ 435.706 Qualification of testers and installers.**

Active radon control systems shall be designed and installed by individuals who are state-certified as radon mitigation contractors or by an individual listed in the EPA Radon Contractor Proficiency Program. All radon testing shall be performed or supervised by individuals who are state-certified as radon measurement contractors or are listed in the EPA Radon Contractor Proficiency Program.

**§ 435.707 Design and construction requirements.**

707.1 Slab-on-grade foundations and slab-below-grade floor assemblies.

707.1.1 Subfloor preparation. A 0.089 m (4-in.) thick layer of clean graded sand overlain by a continuous layer or strips of geotextile drainage matting designed to allow the lateral flow of soil gas, or clean aggregate passing through a 0.051-m (2-in.) sieve and retained on a 6.4 mm (¼-in.) sieve, shall be placed under all concrete slabs and other floor systems (such as treated-wood floors on ground) that directly contact the ground and are within the walls of the living spaces of the building.

707.1.2 Sub-slab membrane.

707.1.2.1 Application. A 6-mil (or 3-mil cross-laminated) polyethylene or equivalent flexible sheeting material shall be placed on top of the subfloor prior to casting the slab or placing the floor assembly. The sheeting shall cover the entire floor area with separate sections of sheeting overlapped at least 0.305 m (12 in.). The sheeting shall extend to within 13 mm (½ in.) of all pipes, wires, or other penetrations of the material.

707.1.2.2 Sealing. All seams, lap joints, penetrations, punctures, tears, and other disturbances of the continuity of the sub-slab membrane shall be sealed with mastic or tape compatible with the membrane material. Paper or cloth tape shall not be used. Where additional pieces of membrane material are used for sealing, the piece shall overlap the discontinuity a minimum of 12 inches on all sides and shall be sealed with mastic or tape.

707.1.3 Concrete floor slabs. Concrete floor slabs shall be designed, mixed, placed, reinforced, consolidated, finished, and cured in accordance with RS–28.

707.1.3.1 Stakes. The use of grade or support stakes which penetrate the subslab membrane shall be avoided. Permanent and/or temporary concrete blocks or screed chairs may be used. Where stakes are used to support plumbing pipes, electrical conduits, or other objects which penetrate the slab, they shall be sealed to the slab in accordance with section 707.1.4. These stakes shall be solid or have the upper end sealed tightly by installation of an end cap designed to provide a gas-tight seal. Support stakes shall be of non-porous material resistant to decay, corrosion and rust.

707.1.4 Sealing of floor slabs.

707.1.4.1 Openings. Openings through concrete slabs, wood, or other floor assemblies which provide a direct path to exposed soil (such as spaces around bathtub, shower, or toilet drains) shall be filled or closed with non-shrink mortar, grout, expanding foam, polyurethane caulk, elastomeric sealant, or other similar material designed for such application that adheres to the surrounding material and remains flexible. Where large work spaces are formed into a slab, such as beneath a bath tub drain, the exposed soil shall be fully covered with a solvent-based plastic roof cement or other material, to a minimum depth of 1 inch.

707.1.4.2 Penetrations. Gaps around pipe, wire, or other objects that penetrate concrete slabs, wood, or other floor assemblies shall be made airtight with an elastomeric joint sealant as defined in RS–29 and applied in accordance with RS–30 and the sealant manufacturer's installation instructions.

707.1.4.3 Joints. All control joints, isolation joints, construction joints, and other joints in concrete slabs or between slabs and foundation walls shall be sealed. A continuous formed gap (for example, a ''tooled edge''), which allows for the application of a sealant that will provide a continuous, airtight seal, shall be created along all joints. When the slab has cured, the gap shall be cleared of loose material and filled with an elastomeric joint sealant as described in section 707.1.4.2.

707.1.4.4 Cracks. Cracks in the field of a slab with widths greater than 1.59 mm (1/16 in.) shall be routed to a recess with minimum dimensions of 6.35 mm (¼ in.) by 6.35 mm (¼ in.) and sealed with an approved sealant.

707.1.5 Foundation walls.

707.1.5.1 Concrete and masonry. Below-grade concrete and masonry foundation walls shall be water-proofed. Where basements are constructed with

hollow block masonry, the exterior walls shall be covered with 6-mil minimum polyethylene sheeting, extending from the finished grade to cover the joint with the footing. Hollow block masonry walls shall be constructed with one continuous course of solid masonry, masonry that is grouted solid, or a solid concrete beam; the continuous course shall be located at or above finished grade. Where a brick veneer or other masonry ledge is installed, the course immediately below that ledge shall be sealed in the same manner.

707.1.5.2 Wood. Pressure-treated wood foundations shall be constructed, installed, and water-proofed in accordance with RS–31.

707.1.5.3 Joints and penetrations. Joints, cracks, or other openings around all below-grade penetrations or wall ties shall be sealed airtight with an elastomeric sealant on both the inside and outside surfaces of the foundation wall.

707.2 Crawl spaces.

707.2.1 Openings. Openings around all penetrations of those building assemblies that separate crawl spaces from habitable space shall be sealed to prevent air leakage. Means of egress and ingress between habitable spaces and crawl spaces, such as hatches or access doors, shall be sealed or gasketed to prevent air leakage.

707.2.2 Ventilation. Crawl spaces shall be provided with at least 0.0929 $m^2$ (1 $ft^2$) net free area of ventilation openings for each 27.9 $m^2$ (300 $ft^2$) of crawl space area. Such vents shall be through the exterior wall and be of noncloseable design.

707.2.3 Ground cover. The soil in crawl spaces shall be cleaned of all vegetation and organic matter and covered with a continuous layer of 6-mil thick polyethylene sheeting or an equivalent membrane material. The sheeting shall be lapped at least 0.305 m (12 in.) at joints. All seams, joints, penetrations, punctures, and tears in the ground cover membrane shall be sealed in accordance with section 707.1.2.2. The membrane shall fully cover the floor and abut to the foundation walls or footings.

707.3 Vent system.

707.3.1 Passive sub-membrane depressurization system for crawl space construction. One continuous, uninterrupted vent pipe, sealed permanently gas-tight at joints, at least 0.064 m (3 in.) in diameter, and meeting the provisions of RS–32 or RS–33 shall be provided to vent the soil in the crawl space. The vent pipe shall be connected to a plumbing ''T'' fitting and inserted between the membrane and the soil such that the ''T'' fitting rests on the ground and its openings are completely below the membrane. A minimum of five feet of perforated drain pipe of three inches minimum diameter shall join to and extend from each opening of the ''T.'' The pipe perforations shall be parallel to the plane of the ground and shall not be capped at the ends. The ''T'' and its perforated extensions shall be located at least 1.52 m (5 ft) and no more than 5.49 m (18 ft) (measured in a horizontal plane) from the exterior perimeter of the crawlspace area. The vent pipe shall terminate above the roof as required in section 707.3.4. The vent pipe shall have a maximum of 3 elbow or tee fittings between the sub-membrane fitting and the roof termination.

707.3.2 Passive sub-slab depressurization system for basement floor and slab-on-grade foundation construction. A minimum of one continuous, uninterrupted vent pipe, sealed permanently gas-tight at joints, at least 0.64 m (3 in.) in diameter, and meeting the provisions of RS–32 or RS–33 shall be provided to vent the soil below the floor slab. The vent pipe shall have a plumbing ''T'' fitting of the same diameter at one end that shall be placed into the subslab aggregate or other permeable material before the slab is poured. The ''T'' fitting openings shall be completely below the sub-slab membrane. Each subslab termination of the vent pipe shall serve no more than 232 $m^2$ (2500 $ft^2$) of slab floor area. The ''T'' fittings shall be located at least five feet and no more than 5.49 m (18 ft) (measured in a horizontal plane) from the exterior perimeter of the foundation. The pipe shall terminate above the roof as required in section 707.3.4. The vent pipe shall have a maximum of 3 elbow or tee fittings between the sub-slab fitting and the roof termination.

707.3.2.1 Multiple suction points. Where a single residence has multiple floor slabs, floor slabs in excess of 232 $m^2$ (2500 $ft^2$), or floor slabs that are provided and separated by interior footings or other barriers to the lateral flow of subslab soil gas, additional vent pipes shall be installed to ensure that all subslab areas are ventilated. Such pipes shall run independently and terminate as required in section 707.3.4 or shall be manifolded in an accessible location and connected to a single vent terminating above the roof as required in section 707.3.4. Each vent pipe, even if manifolded, shall have a maximum of 3 elbow or tee fittings between the sub-slab fitting and the corresponding roof termination.

707.3.2.2 Exceptions. A sealed slab sump exposed to the sub-slab aggregate, or internal drain tile loops that are stubbed up through the slab, either of which is in turn connected to a vent pipe extending vertically and terminating above the roof as required in section 707.3.4, are exempt from the requirements of section 707.3.2.

707.3.3 Combination construction. In combination basement/crawl space or slab-on-grade/crawl space construction, the vent systems required by sections 707.3.1 or 707.3.2 shall be separate systems or manifolded in an accessible location and connected to a single vent terminating above the roof as required in section 707.3.4.

707.3.4 Vent pipe termination. The vent pipe shall run through the conditioned part of the house to the greatest extent possible and shall not be located within an external wall. A portion of the vent pipe shall be accessible in the attic or other area outside of the habitable space. The vent pipe shall be labeled ''RADON REDUCTION SYSTEM'' in 0.051-m (2-in.) high black letters on a yellow band on each floor level where the vent pipe(s) is exposed and visible. The vent pipe shall be installed with a minimum slope of 3.18 mm (⅛-in.) per 0.305 m (ft) to drain rainwater or condensate by gravity to the soil. The vent pipe shall terminate in a vertical section that extends at least 0.305 m (12 in.) above the surface of the roof. The termination point shall be at least 3.05 m (10 ft) away from any window or other opening into the building's conditioned space that is less than 0.610 m (2 ft) below the termination point. The termination point shall be at least 3.05 m (10 ft) from any adjoining or adjacent buildings.

707.3.5 Electrical service. An approved electrical junction box rated for a 20 amp feed to an external device shall be installed within 20 feet of that portion of the vent pipe in the attic or other area outside of the habitable space identified in section 707.3.4.

707.4 Plumbing system interconnections.

707.4.1 Drains. Floor drains shall be trapped and connected to the building's sanitary drain system. Condensate drains serving cooling coils shall terminate outside the building to daylight or to a floor drain, plumbing fixture, sump, or other approved location.

707.4.2 Sumps. Sumps open to soil or serving as the termination point for subslab or exterior drain tile loops shall be tightly covered. When serving as a floor drain, the sump lid shall be equipped with a trapped inlet.

707.5 HVAC system interconnections.

707.5.1 Air-handling units. Air-handling units shall not be located in crawl spaces or other areas exposed to soil gas.

707.5.1.1 Exception. When the air-handler is sealed so as to preclude the circulation of air from the area exposed to soil gas.

707.5.2 Ducts. Air-handling ducts exposed to soil gas shall be made permanently airtight by sealing in accordance with section 503.5.7. Ducts shall not be installed beneath slabs.

707.5.3 Plenums. Air circulation plenums shall not be located in crawl spaces or in other construction assemblies directly exposed to soil gas. Any plenum assembly shall be made permanently airtight by sealing in accordance with section 503.5.7.

## Subpart H—Standards

### § 435.801 Reference standards.

801.1 The standards, and portions thereof, which are referred to in various sections, paragraphs, and subparagraphs of this part shall be considered a part of this part.

| Code standard No. | Title and source |
|---|---|
| RS–1 | National Fenestration Rating Council 100–91, Procedure for Determining Fenestration Product Thermal Properties, National Fenestration Rating Council, 1300 Spring St., Suite 120, Silver Spring, MD 20910. |
| RS–2 | ANSI/ASHRAE 55–1992, Thermal Environmental Conditions for Human Occupancy, American Society of Heating, Refrigerating, and Air-Conditioning Engineers Inc. 1791 Tullie Circle, N.E., Atlanta, GA 30329–2305. |
| RS–3 | ANSI/ASHRAE Standard 62–1989, Ventilation for Acceptable Indoor Air Quality, American Society of Heating, Refrigerating, and Air-Conditioning Engineers, Inc. 1791 Tullie Circle, N.E., Atlanta, GA 30329–2305. |
| RS–4 | 1993 ASHRAE Handbook of Fundamentals, American Society of Heating, Refrigerating, and Air-Conditioning Engineers, Inc., 1791 Tullie Circle, N.E., Atlanta, GA 3 0329–2305. |
| RS–5 | ASTM E 779–87, Standard Test Method for Determining Air Leakage Rate by Fan Pressurization, American Society for Testing and Materials, 1916 Race Street, Philadelphia, PA 19103. |
| RS–6 | 1992 ASHRAE HVAC Systems and Equipment Handbook, American Society of Heating, Refrigerating, and Air-Conditioning Engineers, Inc., 1791 Tullie Circle, N.E., Atlanta, GA 30329–2305. |
| RS–7 | ASHRAE, Energy Calculations I: Procedures for Determining Heating and Cooling Loads for Computerizing Energy Calculations, Algorithms for Building Heat Transfer Subsystems, 1975, American Society of Heating, Refrigerating, and Air-Conditioning Engineers, Inc., 1791 Tullie Circle, N.E., Atlanta, GA 30329–2305. |
| RS–8 | BuilderGuide Energy Analysis Software for Homebuilders, Passive Solar Industries Council, Passive Solar Industries Council, 1511 K. Street N.W., Suite 600, Washington, DC 20005. |
| RS–9 | ASTM C 177–85, Standard Test Method for Steady-State Heat Flux Measurements and Thermal Transmission Properties by Means of the Guarded-Hot-Plate Apparatus, American Society for Testing and Materials, 1916 Race Street, Philadelphia, PA 19103. |
| RS–10 | ASTM C 518–91, Standard Test Method for Steady-State Heat Flux Measurements and Thermal Transmission Properties by Means of the Heat Flow Meter Apparatus, American Society for Testing and Materials, 1916 Race Street, Philadelphia, PA 19103. |
| RS–11 | ASTM C 236–89, Standard Test Method for Steady-State Thermal Performance of Building Assemblies by Means of a Guarded-Hot-Box, American Society for Testing and Materials, 1916 Race Street, Philadelphia, PA 19103. |
| RS–12 | ASTM C 976–90, Standard Test Method for Thermal Performance of Building Assemblies by Means of a Calibrated Hot Box, American Society for Testing and Materials, 1916 Race Street, Philadelphia, PA 19103. |
| RS–13 | 1988 Builder's Foundation Handbook. U.S. Department of Energy, Office of Scientific and Technical Information, P.O. Box 62, Oak Ridge TN 37831–9939. |
| RS–14 | ASTM E 96–94, Standard Test Methods for Water Vapor Transmission of Materials, American Society for Testing and Materials, 1916 Race Street, Philadelphia, PA 19103. |
| RS–15 | ASTM E 283–91, Standard Test Method for Determining the Rate of Air Leakage Through Exterior Windows, Curtain Walls and Doors Under Specified Pressure Differences Across the Specimen, American Society for Testing and Materials, 1916 Race Street, Philadelphia, PA 19103. |
| RS–16 | ANSI/NWWDA I.S.2–87, Industry Standard for Wood Window Units, National Wood Window and Door Association, 1400 Touhy Ave., Des Plaines, IL 60018. |
| RS–17 | ANSI/AAMA 101–93, Voluntary Specifications for Aluminum and Poly (Vinyl Chloride) (PVC) Prime Windows and Glass Doors, American Architectural Manufacturers Association, Des Plaines, IL 60018. |
| RS–18 | ASTM D 4099–93, Standard Specification for PVC Prime Windows/Sliding Glass Doors, American Society for Testing and Materials 1916 Race Street, Philadelphia, PA 19103. |
| RS–19 | NWWDA I.S.3–88, Industry Standard for Wood Sliding Patio Doors, National Wood Window and Door Association, 1400 Touhy Ave., Des Plaines, IL 60018. |
| RS–20 | Energy Code for Commercial and High-Rise Residential Buildings—Codification of ASHRAE/IESNA 90.1–1989, Energy Efficient Design of New Buildings Except Low-Rise Residential Buildings, American Society of Heating, Refrigerating, and Air-Conditioning Engineers, Inc., 1791 Tullie Circle, N.E., Atlanta, GA 30329–2305. |
| RS–21 | SMACNA, Installation Standards for Residential Heating and Air Conditioning Systems, Sixth Edition, 1988, Sheet Metal and Air Conditioning Contractors Nat'l Assoc., 4201 Lafayette Center, Dr., Chantilly, VA 22021–1209. |
| RS–22 | SMACNA, HVAC Duct Construction Standards—Metal and Flexible, First Edition, 1985, Sheet Metal and Air Conditioning Contractors Nat'l Assoc., 4201 Lafayette Center, Dr., Chantilly, VA 22021–1209. |
| RS–23 | SMACNA Fibrous Glass Duct Construction Standards, 6th Edition, Washington, D.C., 1992, Sheet Metal and Air Conditioning Contractors Nat'l Assoc. 4201 Lafayette Center, Dr., Chantilly, VA 22021–1209. |
| RS–24 | NAIMA Fibrous Glass Duct Construction Standards, 1989 Edition, North American Insulation Manufacturers Assoc., 44 Canal Center Plaza, Suite 310, Alexandria, VA 22314. |
| RS–25 | CGSB, The Spillage Test. CAN/CGSB–51.71–94, Canadian General Standards Board, 222 Queen Street, Suite 1402, Ottawa, Ontario, Canada K1A 1G6. |
| RS–26 | EPA 402–R–92–003, Protocol for Radon & Radon Decay Product Measurements in Homes, United States Environmental Protection Agency, Washington, DC 20460. |
| RS–27 | EPA 402–R–93–078, Radon Mitigation Standards, United States Environmental Protection Agency, Washington, DC 20460. |
| RS–28 | ACI Standard 302.1R–89, Guide for Concrete Floor and Slab Construction, American Concrete Institute, P.O. Box 19150, Redford Station, Detroit, MI 48219. |

| Code standard No. | Title and source |
|---|---|
| RS–29 ..... | ASTM C 920–94, Standard Specification for Elastomeric Joint Sealant, American Society for Testing and Materials, 1916 Race Street, Philadelphia, PA 19103. |
| RS–30 ..... | ASTM C 1193–91, Standard Guide for Use of Joint Sealants, American Society for Testing and Materials, 1916 Race Street, Philadelphia, PA 19103. |
| RS–31 ..... | Permanent Wood Foundation Design and Construction Guide, Southern Pine Council, Southern Pine Council, P.O. Box 641700, Kenner, LA 70064. |
| RS–32 ..... | ASTM D 2665–94, Standard Specification for PVC Plastic Drain, Waste, and Vent Pipe and Fittings, American Society for Testing and Materials, 1916 Race Street, Philadelphia, PA 19103. |
| RS–33 ..... | ASTM D 2661–94A, Standard Specification for ABS Plastic Drain, waste, and Vent Pipe and Fittings, American Society for Testing and Materials, 1916 Race Street, Philadelphia, PA 19103. |
| RS–34 ..... | Analysis of Options for EPA's Model Standards for Controlling Radon in New Homes, United States Environmental Protection Agency, Washington, DC 20460. |

**§ 435.802 Abbreviations and acronyms used in reference standards.**

AAMA American Architectural Manufacturers Association

ACI American Concrete Institute

ACCA Air Conditioning Contractors of America

ANSI American National Standards Institute, Inc.

ARI Air Conditioning and Refrigeration Institute

ASHRAE American Society of Heating, Refrigerating, and Air-Conditioning Engineers, Inc.

ASTM American Society for Testing and Materials

CABO Council of American Building Officials

CGSB Canadian General Standards Board

OSTI U.S. Department of Energy

EPA United States Environmental Protection Agency

NWWDA National Wood Window and Door Association

NAIMA North American Insulation Manufacturers Assoc.

NFRC National Fenestration Ratings Council

PSIC Passive Solar Industries Council

SMACNA Sheet Metal and Air Conditioning Contractors Nat'l Assoc.

SPC Southern Pine Council

BILLING CODE 6450–01–P

**Appendix to Part 435—Figures and Tables**

**Figure 1.** Maximum $U_o$-value for Walls

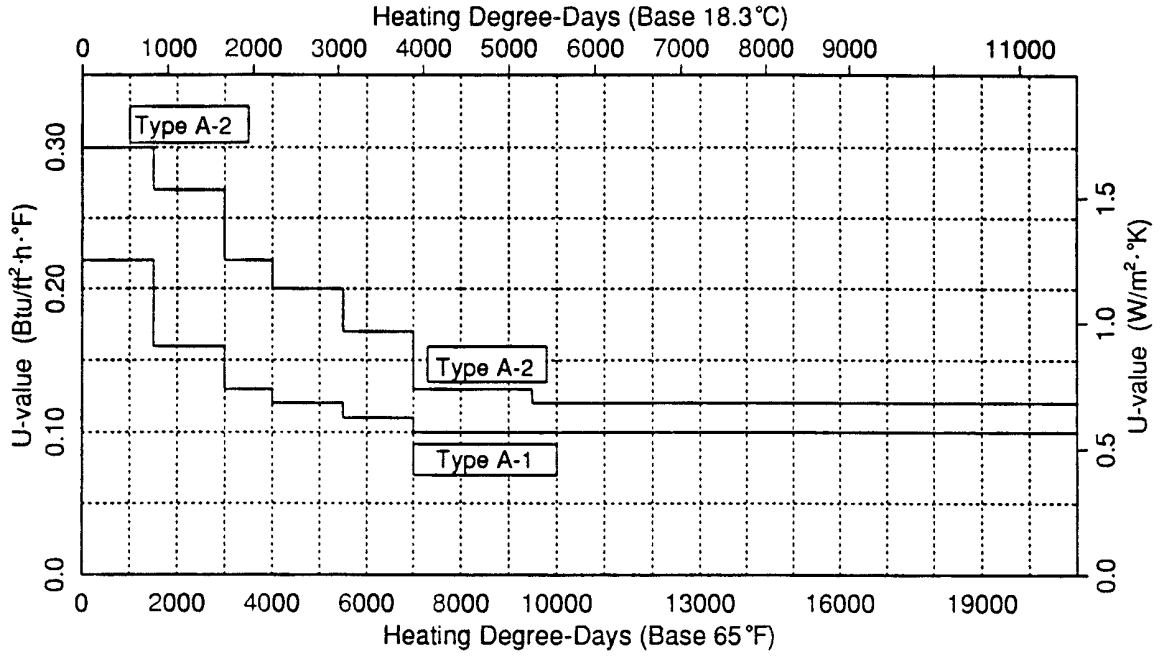


**Figure 2.** Maximum $U_o$-value for Roof/Ceilings

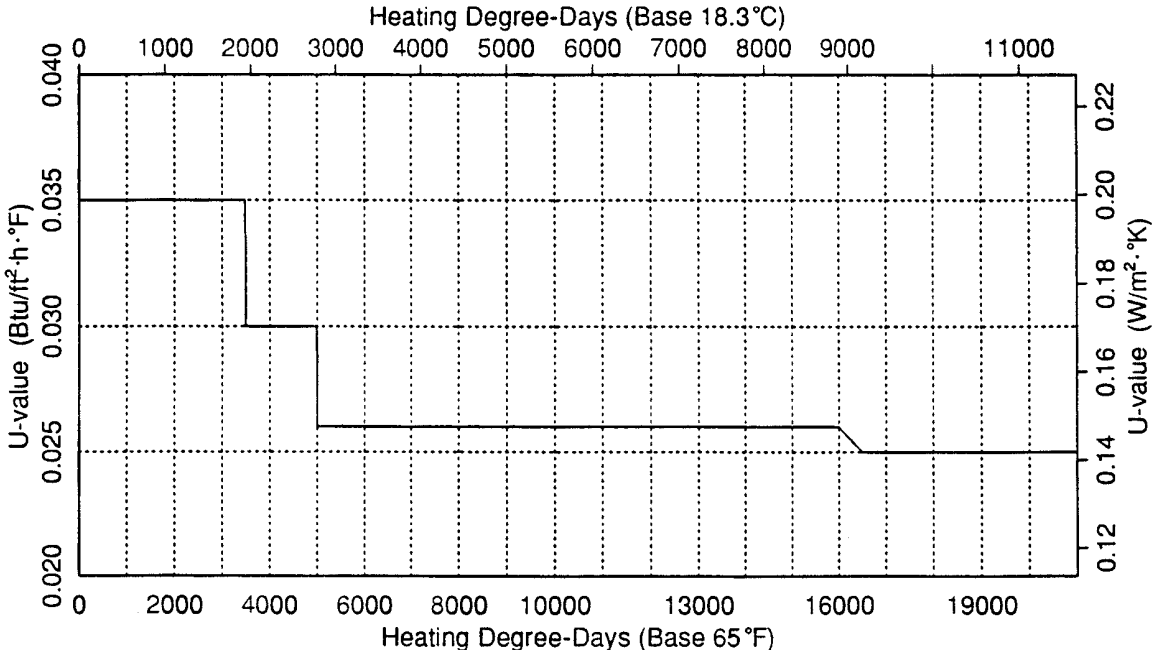

**Figure 3.** Minimum R-value and Insulation Depth for Slab-on-Grade

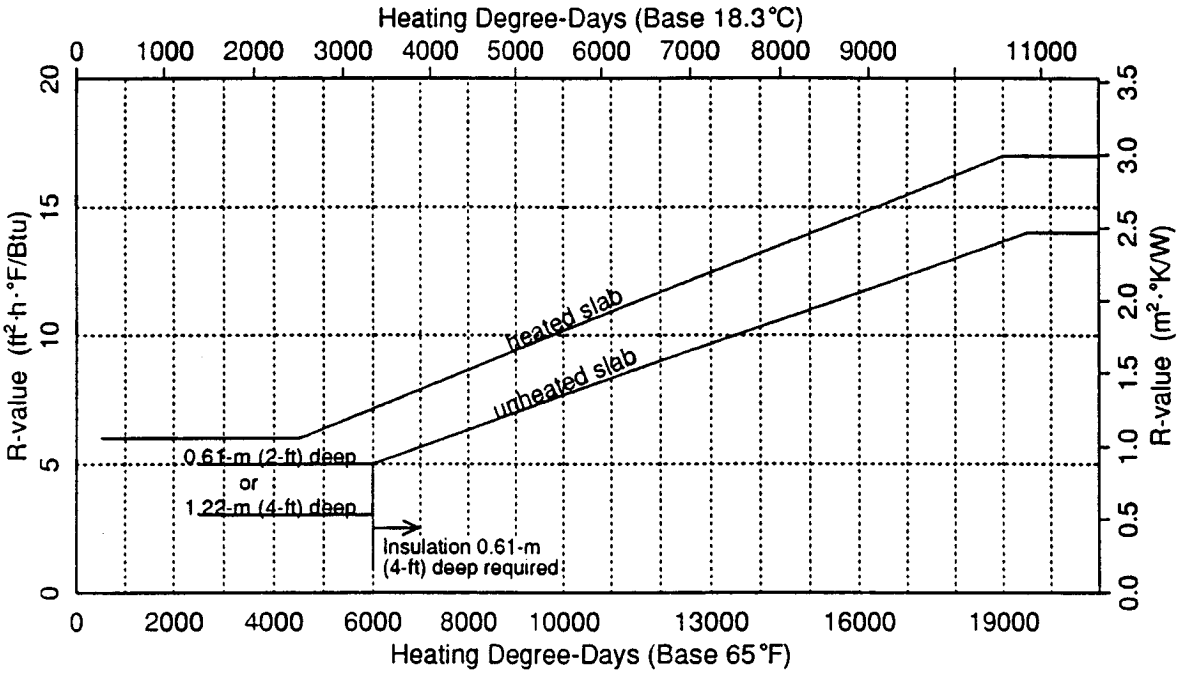


**Figure 4.** Maximum $U_o$-value for Floors Over Unheated Spaces

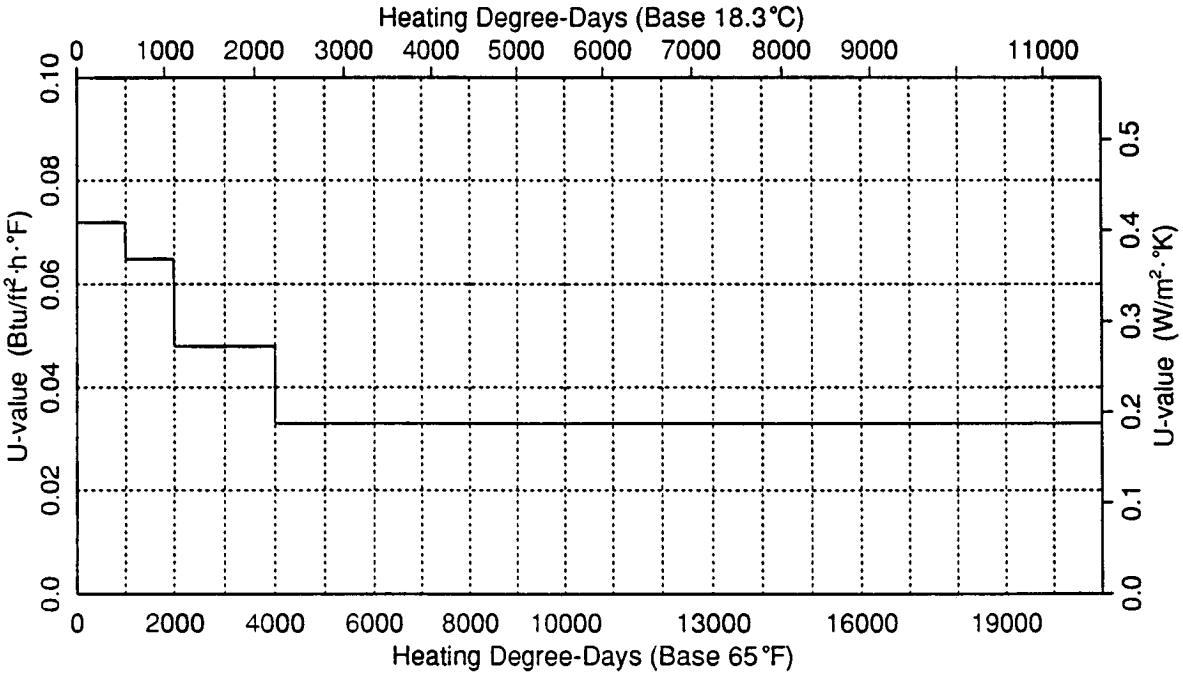

**Figure 5**. Maximum $U_o$-value for Crawl Space Walls

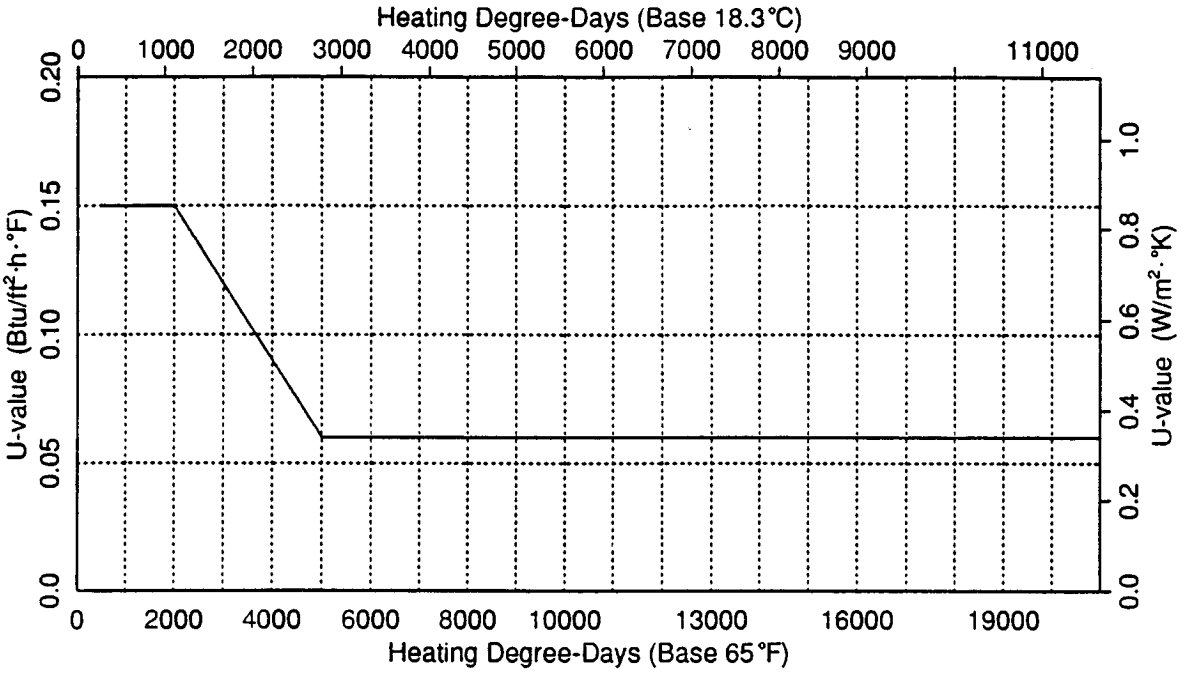


**Figure 6.** Maximum $U_o$-value for Basement Walls

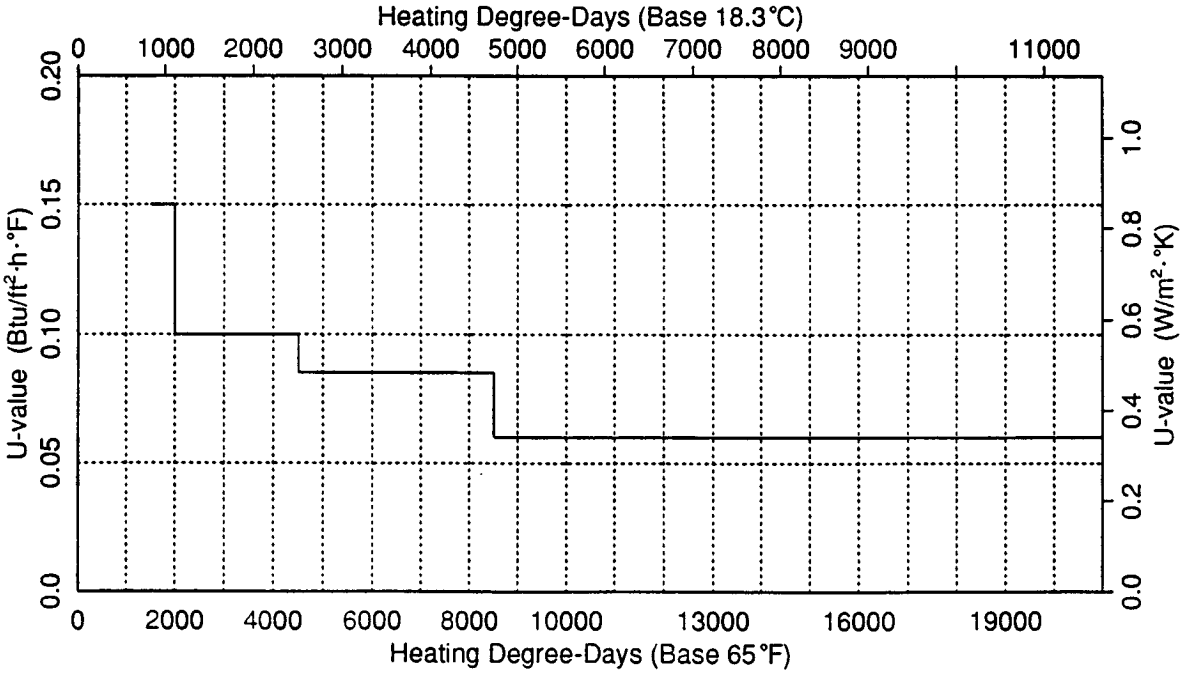

**Table 102.3.1.**

U-Value Default Table for Windows, Glazed Doors, and Skylights

| | Single $W/m^2 \cdot °K$ ($Btu/h \cdot ft^2 \cdot °F$) | Double $W/m^2 \cdot °K$ ($Btu/h \cdot ft^2 \cdot °F$) |
|---|---|---|
| Metal Without Thermal Break | | |
| Operable | 7.38 (1.30) | 4.94 (.87) |
| Fixed | 6.64 (1.17) | 3.92 (.69) |
| Door | 7.15 (1.26) | 4.54 (.80) |
| Skylight | 10.90 (1.92) | 7.38 (1.30) |
| Metal With Thermal Break | | |
| Operable | 6.08 (1.07) | 3.80 (.67) |
| Fixed | 6.30 (1.11) | 3.58 (.63) |
| Door | 6.25 (1.10) | 3.75 (.66) |
| Skylight | 10.96 (1.93) | 6.42 (1.13) |
| Metal-Clad Wood | | |
| Operable | 5.56 (.98) | 3.41 (.60) |
| Fixed | 5.96 (1.05) | 3.29 (.58) |
| Door | 5.62 (.99) | 3.24 (.57) |
| Skylight | 8.52 (1.50) | 5.00 (.88) |
| Wood/Vinyl | | |
| Operable | 5.34 (.94) | 3.18 (.56) |
| Fixed | 5.91 (1.04) | 3.24 (.57) |
| Door | 5.56 (.98) | 3.18 (.56) |
| Skylight | 8.35 (1.47) | 4.83 (.85) |

**Table 102.3.2.**

U-Value Default Table for Nonglazed Doors

| | $W/m^2 \cdot °K$ ($Btu/h \cdot ft^2 \cdot °F$) | |
|---|---|---|
| Steel Doors | With Foam Core | Without Foam Core |
| | 1.99 (0.35) | 3.41 (0.60) |
| | Without Storm | With Storm |
| Wood Doors [4.44 cm (1.75 in.) Thick] | 3.07 (0.54) | 2.04 (0.36) |
| Panel with 1.11 cm (7/16-in.) Panels | 2.61 (0.46) | 1.82 (0.32) |
| Hollowcore Flush | 2.21 (0.39) | 1.59 (0.28) |
| Panel with 2.86 cm (1 1/8-in.) Panels | 2.27 (0.40) | 1.48 (0.26) |
| Solid Core Flush | | |

**Table 502.2.1.1.2.**
Correction Factors for Wall Sections with Metal Studs

| Size of Members | Stud Gage | Spacing of Framing | $R_{ins}$ $m^2 \cdot °K/W$ ($h \cdot ft^2 \cdot °F/Btu$) | $F_c$ |
|---|---|---|---|---|
| 0.038 X 0.089 m (2 x 4 in.) | 18 - 16 | 0.406 m O.C. (16 in.) | 1.94 (R-11)<br>2.29 (R-13)<br>2.64 (R-15) | 0.50<br>0.46<br>0.43 |
| 0.038 X 0.089 m (2 x 4 in.) | 18 - 16 | 0.610 m O.C. (24 in.) | 1.94 (R-11)<br>2.29 (R-13)<br>2.64 (R-15) | 0.60<br>0.55<br>0.52 |
| 0.038 X 0.152 m (2 x 6 in.) | 18 - 16 | 0.406 m O.C. (16 in.) | 3.35 (R-19)<br>3.70 (R-21) | 0.37<br>0.35 |
| 0.038 X 0.152 m (2 x 6 in.) | 18 - 16 | 0.610 m O.C. (24 in.) | 3.35 (R-19)<br>3.70 (R-21) | 0.45<br>0.43 |
| 0.038 X 0.203 m (2 x 8 in.) | 18 - 16 | 0.406 m O.C. (16 in.) | 4.40 (R-25) | 0.31 |
| 0.038 X 0.203 m (2 x 8 in.) | 18 - 16 | 0.610 m O.C. (24 in.) | 4.40 (R-25) | 0.38 |
| Note: $F_c$ factors also apply to metal studs thinner than 18 gage. | | | | |

**Table 702.2**

Table 702.2 shall be used to determine the scope of the radon control provisions as covered in Section 702.2. Only EPA-designated Zone 1 counties are listed.

ALABAMA
Calhoun
Clay
Cleburne
Colbert
Coosa
Franklin
Jackson
Lauderdale
Lawrence
Limestone
Madison
Morgan
Talladega

CALIFORNIA
Santa Barbara
Ventura

COLORADO
Adams
Arapahoe
Baca
Bent
Boulder
Chaffee
Cheyenne
Clear Creek
Crowley
Custer
Delta
Denver
Dolores
Douglas
Elbert
El Paso
Fremont
Garfield
Gilpin
Grand
Gunnison
Huerfano
Jackson
Jefferson
Kiowa
Kit Carson
Lake
Larimer
Las Animas
Lincoln
Logan
Mesa
Moffat
Montezuma
Montrose
Morgan
Otero
Ouray
Park
Phillips
Pitkin
Prowers
Pueblo
Rio Blanco
San Miguel
Sedgwick
Summit
Teller
Washington
Weld
Yuma

CONNECTICUT
Fairfield
Middlesex
New Haven
New London

GEORGIA
Cobb
De Kalb
Fulton
Gwinnett

IDAHO
Benewah
Blaine
Boise
Bonner
Boundary
Butte
Camas
Clark
Clearwater
Custer
Elmore
Fremont
Gooding
Idaho
Kootenai
Latah
Lemhi
Shoshone
Valley

ILLINOIS
Adams
Boone
Brown
Bureau
Calhoun
Carroll
Cass
Champaign
Coles
De Kalb
De Witt
Douglas
Edgar
Ford
Fulton
Greene
Grundy
Hancock
Henderson
Henry
Iroquois
Jersey
Jo Daviess
Kane
Kendall
Knox
La Salle
Lee
Livingston
Logan
Mcdonough
Mclean
Macon
Marshall Mason
Menard
Mercer
Morgan
Moultrie
Ogle
Peoria
Piatt
Pike
Putnam
Rock Island
Sangamon
Schuyler
Scott
Stark
Stephenson
Tazewell

Vermilion
Warren
Whiteside
Winnebago
Woodford

INDIANA
Adams
Allen
Bartholomew
Benton
Blackford
Boone
Carroll
Cass
Clark
Clinton
Decatur
De Kalb
Delaware
Elkhart
Fayette
Fountain
Fulton
Grant
Hamilton
Hancock
Harrison
Hendricks
Henry
Howard
Huntington
Jay
Jennings
Johnson
Kosciusko
Lagrange
Lawrence
Madison
Marion
Marshall
Miami
Monroe
Montgomery
Noble
Orange
Putnam
Randolph
Rush
St Joseph
Scott
Shelby
Steuben
Tippecanoe
Tipton
Union
Vermillion
Wabash
Warren
Washington
Wayne
Wells
White
Whitley

IOWA
Adair
Adams
Allamakee
Appanoose
Audubon
Benton
Black Hawk
Boone
Bremer
Buchanan
Buena Vista
Butler
Calhoun
Carroll
Cass
Cedar
Cerro Gordo
Cherokee
Chickasaw
Clarke
Clay
Clayton
Clinton
Crawford
Dallas
Davis
Decatur
Delaware
Des Moines
Dickinson
Dubuque
Emmet
Fayette
Floyd
Franklin
Fremont
Greene
Grundy
Guthrie
Hamilton
Hancock
Hardin
Harrison
Henry
Howard
Humboldt
Ida
Iowa
Jackson
Jasper
Jefferson
Johnson
Jones
Keokuk
Kossuth
Lee
Linn
Louisa
Lucas
Lyon
Madison
Mahaska
Marion
Marshall
Mills
Mitchell
Monona
Monroe
Montgomery
Muscatine
Obrien
Osceola
Page
Palo Alto
Plymouth
Pocahontas
Polk Pottawattamie
Poweshiek
Ringgold
Sac
Scott
Shelby
Sioux
Story
Tama
Taylor
Union
Van Buren
Wapello
Warren
Washington
Wayne
Webster
Winnebago
Winneshiek
Woodbury
Worth
Wright

KANSAS
Atchison
Barton
Brown
Cheyenne
Clay
Cloud
Decatur
Dickinson
Douglas
Ellis

Ellsworth
Finney
Ford
Geary
Gove
Graham
Grant
Gray
Greeley
Hamilton
Haskell
Hodgeman
Jackson
Jewell
Johnson
Kearny
Kingman
Kiowa
Lane
Leavenworth
Lincoln
Logan
Mcpherson
Marion
Marshall
Meade
Mitchell
Nemaha
Ness
Norton
Osborne
Ottawa
Pawnee
Phillips
Pottawatomie
Pratt
Rawlins
Republic
Rice
Riley
Rooks
Rush
Russell
Saline
Scott
Sheridan
Sherman
Smith
Stanton
Thomas
Trego
Wallace
Washington
Wichita
Wyandotte

KENTUCKY
Adair
Allen
Barren
Bourbon
Boyle
Bullitt
Casey
Clark
Cumberland
Fayette
Franklin
Green
Harrison
Hart
Jefferson
Jessamine
Lincoln
Marion
Mercer
Metcalfe
Monroe
Nelson
Pendleton
Pulaski
Robertson
Russell
Scott
Taylor
Warren
Woodford

MAINE
Androscoggin
Aroostook
Cumberland
Franklin
Hancock
Kennebec
Lincoln
Oxford
Penobscot
Piscataquis
Somerset
York

MARYLAND
Baltimore
Calvert
Carroll
Frederick
Harford
Howard
Montgomery
Washington

MASSACHUSETTS
Essex
Middlesex
Worcester

MICHIGAN
Branch
Calhoun
Cass
Hillsdale
Jackson
Kalamazoo
Lenawee
St Joseph
Washtenaw

MINNESOTA
Becker
Big Stone
Blue Earth
Brown
Carver
Chippewa
Clay
Cottonwood
Dakota
Dodge
Douglas
Faribault
Fillmore
Freeborn
Goodhue
Grant
Hennepin
Houston
Hubbard
Jackson
Kanabec
Kandiyohi
Kittson
Lac Gui Parle
Le Sueur
Lincoln
Lyon
Mcleod
Mahnomen
Marshall
Martin
Meeker
Mower
Murray
Nicollet
Nobles
Norman
Olmsted
Otter Tail
Pennington
Pipestone
Polk
Pope
Ramsey
Red Lake
Redwood
Renville

Rice
Rock
Roseau
Scott
Sherburne
Sibley
Stearns
Steele
Stevens
Swift
Todd
Traverse
Wabasha
Wadena
Waseca
Washington
Watonwan
Wilkin
Winona
Wright
Yellow Medicine

MISSOURI
Andrew
Atchison
Buchanan
Cass
Clay
Clinton
Holt
Iron
Jackson
Nodaway
Platte

MONTANA
Beaverhead
Big Horn
Blaine
Broadwater
Carbon
Carter
Cascade
Chouteau
Custer
Daniels
Dawson
Deer Lodge
Fallon
Fergus
Flathead
Gallatin
Garfield
Glacier
Granite
Hill
Jefferson
Judith Basin
Lake
Lewis And Clark
Liberty
Lincoln
Mccone
Madison
Meagher
Mineral
Missoula
Park
Phillips
Pondera
Powder River
Powell
Prairie
Ravalli
Richland
Roosevelt
Rosebud
Sanders
Sheridan
Silver Bow
Stillwater
Teton
Toole
Valley
Wibaux
Yellowstone
National Park

NEBRASKA
Adams
Boone
Boyd
Burt
Butler
Cass
Cedar
Clay
Colfax
Cuming
Dakota
Dixon
Dodge
Douglas
Fillmore
Franklin
Frontier
Furnas
Gage
Gosper
Greeley Hamilton
Harlan
Hayes
Hitchcock
Jefferson
Johnson
Kearney
Knox
Lancaster
Madison
Nance
Nemaha
Nuckolls
Otoe
Pawnee
Phelps
Pierce
Platte
Polk
Red Willow
Richardson
Saline
Sarpy
Saunders
Seward
Stanton
Thayer
Thurston
Washington
Wayne
Webster
York

NEVADA
Carson City
Douglas
Eureka
Lander
Lincoln
Lyon
Mineral
Pershing
White Pine

NEW HAMPSHIRE
Carroll

NEW JERSEY
Hunterdon
Mercer
Monmouth
Morris
Somerset
Sussex
Warren

NEW MEXICO
Bernalillo
Colfax
Mora
Rio Arriba
San Miguel
Santa Fe
Taos

NEW YORK
Albany

Allegany
Broome
Cattaraugus
Cayuga
Chautauqua
Chemung
Chenango
Columbia
Cortland
Delaware
Dutchess
Erie
Genesee
Greene
Livingston
Madison
Onondaga
Ontario
Orange
Otsego
Putnam
Rensselaer
Schoharie
Schuyler
Seneca
Steuben
Sullivan
Tioga
Tompkins
Ulster
Washington
Wyoming
Yates

NORTH CAROLINA
Alleghany
Buncombe
Cherokee
Henderson
Mitchell
Rockingham
Transylvania
Watauga

NORTH DAKOTA
Adams
Barnes
Benson
Billings
Bottineau
Bowman
Burke
Burleigh
Cass
Cavalier
Dickey
Divide
Dunn
Eddy
Emmons
Foster
Golden Valley
Grand Forks
Grant
Griggs
Hettinger
Kidder
La Moure
Logan
Mchenry
Mcintosh
Mckenzie
Mclean
Mercer
Morton
Mountrail
Nelson
Oliver
Pembina
Pierce
Ramsey
Ransom
Renville
Richland
Rolette
Sargent
Sheridan
Sioux
Slope
Stark
Steele
Stutsman Towner
Traill
Walsh
Ward
Wells
Williams

OHIO
Adams
Allen
Ashland
Auglaize
Belmont
Butler
Carroll
Champaign
Clark
Clinton
Columbiana
Coshocton
Crawford
Darke
Delaware
Fairfield
Fayette
Franklin
Greene
Guernsey
Hamilton
Hancock
Hardin
Harrison
Holmes
Huron
Jefferson
Knox
Licking
Logan
Madison
Marion
Mercer
Miami
Montgomery
Morrow
Muskingum
Perry
Pickaway
Pike
Preble
Richland
Ross
Seneca
Shelby
Stark
Summit
Tuscarawas
Union
Van Wert
Warren
Wayne
Wyandot

PENNSYLVANIA
Adams
Allegheny
Armstrong
Beaver
Bedford
Berks
Blair
Bradford
Bucks
Butler
Cameron
Carbon
Centre
Chester
Clarion
Clearfield
Clinton
Columbia
Cumberland
Dauphin
Delaware
Franklin

Fulton
Huntingdon
Indiana
Juniata
Lackawanna
Lancaster
Lebanon
Lehigh
Luzerne
Lycoming
Mifflin
Monroe
Montgomery
Montour
Northampton
Northumberland
Perry
Schuylkill
Snyder
Sullivan
Susquehanna
Tioga
Union
Venango
Westmoreland
Wyoming
York

RHODE ISLAND
Kent
Washington

SOUTH CAROLINA
Greenville

SOUTH DAKOTA
Aurora
Beadle
Bon Homme
Brookings
Brown
Brule
Buffalo
Campbell
Charles Mix
Clark
Clay
Codington
Corson
Davison
Day
Deuel
Douglas
Edmunds
Faulk
Grant
Hamlin
Hand
Hanson
Hughes
Hutchinson
Hyde
Jerauld
Kingsbury
Lake
Lincoln
Lyman
Mccook
Mcpherson
Marshall
Miner
Minnehaha
Moody
Perkins
Potter Roberts
Sanborn
Spink
Stanley
Sully
Turner
Union
Walworth
Yankton

TENNESSEE
Anderson
Bedford
Blount
Bradley
Claiborne
Davidson
Giles
Grainger
Greene
Hamblen
Hancock
Hawkins
Hickman
Humphreys
Jackson
Jefferson
Knox
Lawrence
Lewis
Lincoln
Loudon
Mcminn
Marshall
Maury
Meigs
Monroe
Moore
Perry
Roane
Rutherford
Smith
Sullivan
Trousdale
Union
Washington
Wayne
Williamson
Wilson

UTAH
Carbon
Duchesne
Grand
Piute
Sanpete
Sevier
Uintah

VIRGINIA
Alleghany
Amelia
Appomattox
Augusta
Bath
Bland
Botetourt
Brunswick
Buckingham
Campbell
Chesterfield
Clarke
Craig
Cumberland
Dinwiddie
Fairfax
Fluvanna
Frederick
Giles
Goochland
Henry
Highland
Lee
Louisa
Montgomery
Nottoway
Orange
Page
Patrick
Pittsylvania
Powhatan
Pulaski
Roanoke
Rockbridge
Rockingham
Russell
Scott
Shenandoah
Smyth
Spotsylvania
Stafford

Tazewell
Warren
Washington
Wythe

WASHINGTON
Clark
Ferry
Okanogan
Pend Oreille
Skamania
Spokane
Stevens

WEST VIRGINIA
Berkeley
Brooke
Grant
Greenbrier
Hampshire
Hancock
Hardy
Jefferson
Marshall
Mercer
Mineral
Monongalia
Monroe
Morgan
Ohio
Pendleton
Pocahontas
Preston
Summers
Wetzel

WISCONSIN
Buffalo
Crawford
Dane
Dodge
Door
Fond Du Lac
Grant
Green
Green Lake
Iowa
Jefferson
Lafayette
Langlade
Marathon
Pepin
Pierce
Portage
Richland
Rock
St Croix
Shawano
Vernon Walworth
Washington
Waukesha
Waupaca
Wood

WYOMING
Albany
Big Horn
Campbell
Carbon
Converse
Crook
Fremont
Goshen
Hot Springs
Johnson
Laramie
Lincoln
Natrona
Niobrara
Park
Sheridan
Sublette
Sweetwater
Teton
Uinta
Washakie
Menominee

[FR Doc. 97–10922 Filed 4–29–97; 8:45 am]
BILLING CODE 6450–01–C

federal register

Friday
May 2, 1997

# Part III

# Environmental Protection Agency

**40 CFR Part 60, et al.**

**Revised Technical Standards for Hazardous Waste Combustion Facilities; Proposed Rule**

**ENVIRONMENTAL PROTECTION AGENCY**

**40 CFR Parts 60, 63, 260, 261, 264, 265, 266, 270, and 271**

**[FRL–5818–9]**

## Revised Technical Standards for Hazardous Waste Combustion Facilities

**AGENCY:** Environmental Protection Agency (EPA).

**ACTION:** Notice of data availability and request for comments.

**SUMMARY:** This document is a notice of availability and invitation for comment on the following information pertaining to the proposed revised standards for hazardous waste combustors (61 FR 17358 (April 19, 1996)): Report on the status of setting national emission standards for hazardous air pollutants (NESHAPS) based on the revised emissions database; Report on the selection of pollutants and source categories, including area and major sources; report on the status of various implementation issues, including compliance dates, compliance requirements, performance testing, and notification and reporting requirements; and report on the status of permit requirements, including waste minimization incentives.

**DATES:** Written comments must be submitted by June 2, 1997.

**ADDRESSES:** Commenters must send an original and two copies of their comments referencing docket number F–97–CS4A–FFFFF to: RCRA Docket Information Center, Office of Solid Waste (5305G), U.S. Environmental Protection Agency Headquarters (EPA, HQ), 401 M Street, SW., Washington, DC 20460. Deliveries of comments should be made to the Arlington, Virginia address listed below. Comments may also be submitted electronically through the Internet to: rcra-docket@epamail.epa.gov. Comments in electronic format should also be identified by the docket number F–97–CS4A–FFFFF. All electronic comments must be submitted as an ASCII file avoiding the use of special characters and any form of encryption. For other information regarding submitting comments electronically or viewing the comments received or supporting information, please refer to the proposed rule (61 FR 17358 (April 19, 1996)).

Commenters should not submit electronically any confidential business information (CBI). An original and two copies of the CBI must be submitted under separate cover to: RCRA CBI Document Control Officer, Office of Solid Waste (5305W), U.S. EPA, 401 M Street, SW., Washington, DC 20460.

Public comments and supporting materials are available for viewing in the RCRA Information Center (RIC), located at Crystal Gateway One, 1235 Jefferson Davis Highway, First Floor, Arlington, Virginia. The RIC is open from 9 a.m. to 4 p.m., Monday through Friday, except for Federal holidays. To review docket materials, the public must make an appointment by calling 703–603–9230. The public may copy a maximum of 100 pages from any regulatory docket at no charge. Additional copies cost $0.15 per page.

**FOR FURTHER INFORMATION CONTACT:** For general information, contact the RCRA Hotline at 1–800–424–9346 or TDD 1–800–553–7672 (hearing impaired). In the Washington metropolitan area, call 703–412–9810 or TDD 703–412–3323. The RCRA Hotline is open Monday–Friday, 9 a.m. to 6 p.m., Eastern Standard Time. The RCRA Hotline can also provide directions on how to access electronically some of the documents and data referred to in this notice via EPA's Cleanup Information Bulletin Board System (CLU-IN). The CLU-IN modem access phone number is 301–589–8366, or Telnet to clu-in.epa.gov for Internet access. The files posted on CLU-IN are in Portable Document Format (PDF) and can be viewed and printed using Acrobat Reader.

For more detailed information on specific aspects of this notice, contact Larry Denyer, Office of Solid Waste (5302W), U.S. Environmental Protection Agency, 401 M Street, SW., Washington, DC 20460, 703–308–8770, e-mail address: denyer.larry@epamail.epa.gov.

**SUPPLEMENTARY INFORMATION:**

The Agency specifically solicits comment on the following documents:

(1) Draft Technical Support Document for HWC MACT Standards (NODA), Volume I: MACT Evaluations Based on Revised Database, April 1997.

(2) Draft Technical Support Document for HWC MACT Standards (NODA), Volume II: Evaluation of CO/HC and DRE Database, April 1997.

(3) Draft Technical Support Document for HWC MACT Standards (NODA), Volume III: Evaluation of Metals Emissions Database to Investigate Extrapolation and Interpolation Issues, April 1997.

In preparing this notice, the Agency considered comments on the proposed rule, including those listed below. EPA is soliciting responsive comments regarding certain data and information presented in these comments:

(1) Cement Kiln Recycling Coalition
(2) Chemical Manufacturers Association
(3) Coalition for Responsible Waste Incineration
(4) Don Clay Associates
(5) The Dow Chemical Company
(6) Environmental Technology Council
(7) Holnam Inc.
(8) Lafarge Corporation
(9) Molten Metal Technology, Inc.
(10) The Natural Resources Defense Council, Inc.
(11) Rollins Environmental Services, Inc.
(12) Safety-Kleen Corp.
(13) Texas Natural Resource Conservation Commission
(14) vonRoll/WTI

Readers should note that only comments about new information discussed in this notice will be considered by the Agency. Issues related solely to the April 19, 1996 proposed rule and other subsequent notices that are not directly affected by the documents or data referenced in today's Notice of Data Availability are not open for further comment.

### Glossary of Acronyms

acfm—Actual Cubic Feet per Minute
ACI—Activated Carbon Injection
APCD—Air Pollution Control Device
BIF—Boiler and Industrial Furnace
BTF—Beyond-the-Floor
CAA—Clean Air Act
CEMS—Continuous Emissions Monitoring System
D/F—Dioxins/Furans
ESP—Electrostatic Precipitator
gr/dscf—Grains per Dry Standard Cubic Foot
HAP—Hazardous Air Pollutant
HC—Hydrocarbons
HWC/HWI—Hazardous Waste Combustor/Incinerator
IWS—Ionizing Wet Scrubber
LVM—Low-volatile Metals
LWAK—Lightweight Aggregate Kiln
MACT—Maximum Achievable Control Technology
MTEC—Maximum Theoretical Emission Concentration
NESHAPs—National Emission Standards for HAPs
NODA—Notice of Data Availability
NPRM—Notice of Proposed Rulemaking
NSPS—New Source Performance Standards
PM—Particulate Matter
RCRA—Resource Conservation and Recovery Act
SRE—System Removal Efficiency
SVM—Semi-volatile Metals
TEQ—Toxic Equivalent
μg/dscm—Micrograms per Dry Standard Cubic Meter

**TABLE OF CONTENTS**

**Part One: Background and Overview of Today's Notice**

I. Background
II. Overview of Today's Notice

**Part Two: Standards For Hazardous Air Pollutants (NESHAPs)**

I. Regulation of Area Sources
A. Approach to Regulate Area Sources, as Proposed
B. Positive Area Source Finding for HWCs
C. Title V Permitting Requirements for Area Sources
II. Revisions to Proposed Standards Using the Revised Emissions Database and Data Analysis Methods
A. Notice of Data Availability on the Revised Emissions Database
B. PM as a Surrogate for Non-Hg Metals
C. Options for Controlling Emissions of Organic HAPs
D. Accounting for Emissions Variability in Establishing Emission Standards
E. Re-Evaluation of Proposed MACT Standards for Incinerators
F. Re-Evaluation of Proposed MACT Standards for Cement Kilns
G. Re-Evaluation of Proposed MACT Standards for Lightweight Aggregate Kilns

**Part Three: Implementation**

I. Compliance Date Considerations
A. Definition of Compliance Date
B. Pre-Certification of Compliance
C. Consequences of Non-compliance
II. Compliance Requirements
A. Compliance with CO and/or HC Emission Standards
B. Startup, Shutdown, and Malfunction Plans
C. Metals Extrapolation and Interpolation Considerations
D. Consideration of Site-Specific Variances for Cement Kilns and LWAKs
E. Emissions Averaging for Cement Kilns
III. DRE Testing Considerations
A. Options for Ensuring Compliance with a DRE Standard
B. DRE As a MACT Versus RCRA Standard
IV. Notification and Reporting Requirement Considerations
A. Public and Regulatory Notification of Intent to Comply
B. Data Compression Allowances
V. Waste Minimization and Pollution Prevention
A. Overview
B. EPA Proposed Flexible Waste Minimization Incentives
C. Comments Received
D. Comments Requested on Additional Waste Minimization Incentives
VI. Permit Requirements
A. Coordination of RCRA and CAA Permitting Processes
B. Permit Process Issues
C. Omnibus and RCRA/CAA Testing Coordination

**Part Four: Miscellaneous Issues**

I. 5000 Btu per Pound Policy for Kiln Products
II. Foundry Sand Thermal Reclamation Units
A. Background
B. Deferral and Variance Options for Consideration
III. Status of Gaseous Fuels Generated from Hazardous Waste Management Activities
IV. Regulatory Flexibility Analysis

## Part One: Background and Overview of Today's Notice

### *I. Background*

On April 19, 1996, EPA proposed revised standards for three source categories of hazardous waste combustors (i.e., hazardous waste incinerators and hazardous waste-burning cement kilns and lightweight aggregate kilns (LWAKs)), 61 FR 17358. After an extension, the comment period closed on August 19, 1996.

The Agency subsequently published two Notices of Data Availability (NODA). The first NODA, published on August 23, 1996 (61 FR 43501) invited comment on information pertaining to a peer review of three aspects of the proposed rule, additional analyses of fuel oils that would be used to establish a comparable fuels exclusion, and information on a synthesis gas process. The comment period on that NODA closed on September 23, 1996. The second NODA, published on January 7, 1997 (62 FR 960) provided notice and opportunity to comment on an updated hazardous waste combustor database containing the emissions and ancillary data that the Agency plans to use to develop the final rule. The comment period on that NODA closed on February 6, 1997.

EPA's proposal to revise standards for hazardous waste incinerators and hazardous waste-burning cement kilns and LWAKs is under joint authority of the Clean Air Act, as amended, (CAA) and the Resource Conservation and Recovery Act, as amended (RCRA). The proposed emission standards were developed under the CAA provisions concerning the maximum level of achievable control over hazardous air pollutants (HAPs), taking into consideration the cost of achieving the emission reduction, any non-air quality health and environmental impacts, and energy requirements. These Maximum Achievable Control Technology (MACT) standards, also re ferred to as National Emission Standards for Hazardous Air Pollutants (NESHAPs), were proposed for the following HAPs: dioxins/furans (D/F), mercury, two semi-volatile metals (lead and cadmium), four low volatility metals (antimony, arsenic, beryllium, and chromium), particulate matter, and hydrochloric acid/chlorine gas. Other toxic organic emissions were addressed by standards for carbon monoxide (CO) and hydrocarbons (HC).

Because of the joint authorities for this rule, the proposal also contained an implementation scheme to harmonize the RCRA and CAA programs to the maximum extent permissible by law. In pursuing a common-sense approach towards this objective, the proposal sought to establish a framework that: (1) Provides for combined (or at least coordinated) CAA and RCRA permitting of these facilities; (2) allows maximum flexibility for regional, state, and local agencies to determine which of their resources will be used for permitting, compliance, and enforcement efforts; and (3) integrates the monitoring, compliance testing, and record keeping requirements of the CAA and RCRA so that facilities will be able to avoid two potentially different regulatory compliance schemes.

### *II. Overview of Today's Notice*

The Agency received a large number of public comments in response to the proposal. The Agency evaluated the public comments received and their applicability to the proposed rule. In those instances where comments provided new information or new insights, the Agency has reevaluated certain aspects of the proposal based on this new information. The Agency is issuing this NODA in an effort to inform the public of: (1) Significant changes the Agency is considering on aspects of the proposal based on public comments and new information; and (2) the Agency's own reevaluation (and to some degree narrowing) of MACT standard-setting approaches based on new data and (at least in part) on public comments.

## Part Two: Standards for Hazardous Air Pollutants (NESHAPs)

### *I. Regulation of Area Sources*

In this section, we solicit comment on making a positive area source finding to subject hazardous waste combustor area sources to the same MACT standards that would apply to major sources and on whether, under such a finding, area sources should be subject to Title V permit requirements.

#### A. Approach To Regulate Area Sources, as Proposed

A major source is a source that has the potential to emit (considering controls) either 10 tons per year of any hazardous air pollutant or 25 tons of any combination of HAPs. Area sources are any sources which are not major sources.

The Agency proposed to subject area sources to MACT standards under authority of CAA section 112(c)(6). See 61 FR at 17365. That section requires

the Agency to subject to MACT standards[1] all sources in source categories that account for not less than 90 percent of the aggregate emissions of each enumerated pollutant.[2] The enumerated pollutants emitted by hazardous waste combustors (HWCs) include mercury (Hg), D/F, and other polycyclic organic HAPs. The Agency explained at proposal that HWCs were significant emitters of D/F and Hg, and that much of the human health risk from emissions of HAPs from HWCs comes from these high priority HAPs, and D/F in particular.

We received many comments pertaining to this part of the proposal, and we will address those comments in the final rule. The area source issue is discussed in today's notice because commenters said that another, more appropriate reading of section 112(c)(6) is that this authority could be used to apply MACT control to area sources only for the enumerated HAPs, not the full array of HAPs that the Agency proposed to regulate (e.g., particulate matter (PM), semivolatile metals (SVM), low volatile metals (LVM)). Nonetheless, were EPA to adopt this reading, the Agency continues to believe that area sources need to be regulated for this full array of HAPs.

In light of issues commenters raised, we solicit comment on an alternative approach that would subject area sources to all of the MACT standards for major sources based on the Agency making a positive area source finding.

B. Positive Area Source Finding For HWCs

Area sources must be regulated by technology-based standards[3] if the area source category is listed pursuant to section 112(c)(3) based on the Agency's finding that these sources (individually or in the aggregate) present a threat of adverse effects to human health or the environment. Such a finding is termed a positive area source finding. The Agency is today soliciting comment on whether a positive area source finding is appropriate for hazardous waste incinerators and hazardous waste burning cement kilns and lightweight aggregate kilns.

A positive area source finding would be based on the risk assessment performed for the proposed rule and ultimately the final rule. Even though the sources modeled in support of the proposed rule may have met the definition of a major source, EPA believes their HAP emissions, other than HCl, are also representative of area source emissions. This is because, as discussed below, these example sources may be able to reduce their HCl emissions to become area sources without reducing emissions of D/F, Hg, or other metal HAPs that could pose significant health risk.[4]

Many comments were submitted on the risk assessment methodology used to support the proposed rule. We are considering these comments in development of the final rule and are making appropriate changes to the risk methodology, including modeling additional facilities. These changes could affect the Agency's findings for both major and area sources. The Agency is not today reopening the comment period on the risk assessment.

1. Risks that could be posed by area source incinerators. We showed at proposal that baseline emissions from incinerators could pose high end individual lifetime cancer risks from D/F up to 9E–5. See 61 FR at 17389. In addition, although the risk from low volatile metals (i.e., As, Be, Cr, and Sb) was not estimated to exceed 4E–6, the example sites modeled were not representative of the short stacks of many on-site incinerators. The direct inhalation component of the individual cancer risk estimates may increase when incinerators with short stacks are included in the risk assessment supporting the final rule.

2. Risks that could Be posed by area source cement kilns. The Agency showed at proposal that baseline emissions from cement kilns could pose high end individual lifetime cancer risks from D/F up to 9E–5. See 61 FR at 17402. Although several high D/F-emitting cement kilns have recently reduced their D/F emissions significantly, a revised risk assessment may well show that cement kilns (both area and major sources) can pose significant health risk at current emission levels.

3. Risks that could Be posed by area source lightweight aggregate kilns. Although the Agency did not show high baseline D/F cancer risks for LWAKs at proposal, the risk assessment assumed extremely low D/F emissions—0.04 ng TEQ/dscm—based on very limited data from a single LWAK. However, as discussed below in section II.G, new data from two additional LWAKs show substantially higher emission levels—up to 4.1 ng TEQ/dscm. At these emission levels, the high end individual lifetime cancer risk from D/F could exceed 1E–5.

4. Basis for a positive area source finding. In evaluating these estimated risk levels to determine whether they are sufficient to make a positive area source finding, the Agency considered other factors which EPA believes to be relevant in determining how to exercise its discretion regarding area source determinations for these sources:

a. HWC area sources can pose the same hazard to human health or the environment as major sources. An area source may have the same emission rates of HAPs other than hydrogen chloride (HCl, the principal HAP that causes a HWC to be a major source) as a major source, and thus pose essentially the same hazard to human health or the environment. In other words, sources could have HCl emissions low enough to avoid a major source classification, but have emissions of D/F that could pose a health risk given that there is no direct correlation between HCl and D/F emissions.[5]

In addition, some HWCs that would currently be classified as major sources because of their HCl emissions may be able to lower their HCl emissions to become area sources. The Agency projects that all LWAKs are currently major sources principally because of their HCl emissions, and that approximately 80 percent of cement kilns are major sources, again because of HCl. These HWCs may be able to lower their HCl emissions to otherwise become area sources.[6]

Sources have until the compliance date of the MACT standards (i.e., three years after publication in the **Federal**

[1] For area sources, section 112(c)(6) requires the Agency to establish either MACT standards under section 112(d)(2), or generally available control technology (GACT) standards under section 112(d)(5). Given the similarities between major and area source HWCs as discussed in subsequent sections of the text, area sources should be subject to MACT.

[2] Section 112(c)(6) enumerates the following high-priority hazardous pollutants for special regulation: alkylated lead compounds, polycyclic organic matter, hexachlorobenzene, mercury, polychlorinated biphenyls, and 2,3,7,8-tetrachlorodibenzofurans and p-dioxin.

[3] That is, MACT standards under section 112(d)(2) or GACT standards under section 112(d)(5).

[4] From a technical perspective related to the nature of common air pollution control devices, reducing HCl emissions would not generally reduce emissions of other HAPs.

[5] For well-designed and operated combustion systems, D/F emissions are related primarily to post-combustion particle surface catalyzed reactions and the temperature of the combustion gas (the optimum temperature window for formation is 450–750 °F), virtually irrespective of HCl concentrations in the gas.

[6] Some commercial incinerators may also be able to lower their allowable HCl emission levels to become area sources. It could be more problematic for on-site incinerators to lower their emissions to become area sources because facility-wide HAP emissions must be considered when making the major/area source determination. For example, on-site incinerators located at large chemical production facilities would need to reduce HAP emissions at a large number of sources.

**Register**) to make a major source determination. Many kilns spiked chlorine in the hazardous waste feed during compliance testing to get approval to feed chlorine (and emit HCl/Cl2) at levels ostensibly higher than normal. Given that sources ''have the potential to emit'' at these ostensibly higher than normal emission rates, these emission rates must be used for the major source determination. See CAA section 112(a)(1), definition of major source. These sources may be able to operate successfully at lower allowable chlorine feedrates and emission rates, however. If so, they can elect to retest their units and base the major/area source determination on potentially lower HCl/Cl2 emission rates.

b. RCRA sections 3004(o)(2) and 3004(q) essentially command regulation of all HWCs. Under this RCRA mandate, the Agency has regulated all (i.e., both major and area sources) hazardous waste incinerators since 1981 (see 46 FR 7678 (Jan. 23, 1981) as amended at 48 FR 14295 (Apr. 1, 1983)) and all hazardous waste burning cement and lightweight kilns since 1991 (see 56 FR 7134 (Feb. 21, 1991)). Deferring regulation of HWCs to the CAA would not be appropriate unless all HWC sources were covered. In addition, although somewhat more than half of the commercial incinerators appear to be area sources, the majority of on-site incinerators are likely to be major sources.[7] The public expectation is that all HWCs would continue to be regulated.[8]

c. MACT controls are reasonable and appropriate for both major and area sources. The emission control equipment (and where applicable, feedrate control) defined as floor or beyond-the-floor (BTF) control for each source category is applicable and appropriate to area sources. There is nothing unique about the types and concentrations of emissions of HAPs from area sources versus major sources that would make MACT inappropriate for an area source.

d. Area source HWCs contribute significantly to D/F and Hg emissions. Both area and major source HWCs contribute significantly to aggregate emissions of D/F and Hg, two high priority HAPs. See CAA section 112(c)(6) and proposal discussion at 61 FR at 17366.

For these reasons, the Agency is taking comment on making positive area source findings for each of the three source categories covered by the proposal. Again, the effect would be to subject all sources within these categories to MACT standards, which also would be the effect of the original proposal.

*C. Title V Permitting Requirements for Area Sources*

Under § 63.1(c)(2), area sources subject to MACT (or GACT) are subject to the requirement to obtain a Title V permit unless the standard for the source category (e.g., Subpart EEE for HWCs) specifies that: (1) States will have the option to exclude area sources from Title V permit requirements; or (2) States will have the option to defer permitting of area sources. The Agency has determined that if it makes a positive area source finding and subjects area sources to MACT standards as discussed above, the Agency would also consider subjecting area sources immediately to Title V permitting requirements, as provided by § 63.1(c)(2)(iii). The Agency has determined that area source compliance with Title V permit requirements would not be ''impracticable, infeasible, or unnecessarily burdensome''. See CAA section 502(a). As noted above, area sources can be virtually identical to major sources with respect to size, type of combustor, and commercial versus on-site status, except that their mass emissions of HCl are lower. Thus, waiver of Title V permitting would not be warranted.

In addition, if the Agency were to waive the Title V permit requirement for area sources, we would be concerned about the confusion it would likely create for the regulated community and the public if the air emissions standards for some hazardous waste combustors (even in the same source category) were addressed in the Title V permitting process and the air emissions standards for others were addressed in the RCRA permitting process. Since a source can make modifications to their emissions levels that could change their major/area source determination, a source could move from one permitting program to the other, creating difficulties for the permitting agencies in tracking sources and for the public in trying to participate in or follow the permitting process. Therefore, it appears most appropriate from an implementation standpoint to subject area sources to Title V permitting. In this way, all HWCs (both major and area sources) would be subject to the same Title V permitting requirements.

*II. Revisions to Proposed Standards Using the Revised Emissions Database and Data Analysis Methods.*

In this section, the Agency discusses comments on the revised emissions database and the revised standards that would result from applying an engineering evaluation and data analysis methods to that revised database. In addition, we discuss several issues that are generic to the MACT standards for all three source categories: (1) Consideration of PM as a surrogate for non-Hg metal HAPs; (2) options for controlling emissions of organic HAPs; and (3) emissions variability.

A. Notice of Data Availability on the Revised Emissions Database

On January 7, 1997 the Agency published a NODA on an updated database of emissions and ancillary information. See 62 FR 960. The Agency updated the database used at proposal to correct errors and include additional emissions data. The NODA explained that the updated database would be used to identify MACT standards for the final rule and to evaluate economic impacts and, for RCRA purposes, risks associated with the final MACT standards.

The Agency received comments on the revised database from 16 stakeholders representing the cement industry, lightweight aggregate industry, and on-site and commercial incinerators. The database was revised again to accommodate the comments received on the database NODA. The Agency then re-analyzed the database to determine the MACT floor standards discussed below.

We received several specific comments (i.e., as opposed to generic and undocumented comments that, for example, the Agency's data are inconsistent with the commenter's) that were not accompanied with supporting documentation. Most of these comments pertain to miscellaneous data on feedstream feedrates and equipment design information that do not have a significant impact on developing MACT floor standards under the data analysis methods discussed in today's NODA. Where there was a significant possibility that the data might affect the Agency's determinations, references were re-checked to determine the more accurate number to be used.

The Cement Kiln Recycling Coalition (CKRC) provided an extensive run-by-run, HAP-by-HAP comparison of the Agency's database with theirs. While

[7] Only approximately 30 percent of incinerators appear to be major sources. This estimate is based on only the incinerators' stack emissions, however. Given that facility-wide emissions of HAPs are considered when making a major source determination, many on-site incinerators are likely to be classified as major sources because they are located at large petrochemical facilities.

[8] It would be particularly problematic from a RCRA perspective for commercial incinerators that are area sources to be exempt from MACT standards.

potentially useful in some cases, their submission unfortunately did not distinguish between significant versus insignificant differences; nor did they verify which data were more accurate for the purposes in question. Within current time constraints, the Agency has identified which appear to us to be significant and relevant differences and then checked these data to determine which appear to be more accurate and has made necessary changes. The current database, as updated and revised, is appropriate and sufficient considering the engineering and data analysis methods discussed below to identify MACT standards. For example, although there may still remain differences between CKRC's and the Agency's database regarding electrostatic precipitator (ESP) and fabric filter design and performance characteristics, those characteristics are not germane to the engineering and data analysis methods for determining relevant MACT standards, as discussed below. In these situations, the Agency has elected not to revise inconsequential data, particularly where it is not clear which data are more accurate.

Some overall decisions on data quality issues have also been made for purposes of revising the database. Regarding assigning values to reported nondetects, we are assuming that nondetected values were present at one-half the detection limit. We considered assuming nondetected values were present at the full detection limit, but found in most cases no significant difference in the MACT data analysis results. It represents a judgment by the Agency based on its experience that, for assessing standards and risk, this more conservative approach increases our confidence that standards and risk are appropriate and acceptable.

In addition, we are excluding data from sources no longer burning hazardous waste, as suggested by several commenters on the proposed rule. Although such data may well be indicative of the capabilities of control equipment and thus relevant, the resulting database is still large enough to ensure that potential final MACT standards can be judged to be achievable (or not as the case may be) without including these more controversial data. Regarding older emissions data when more recent data was available for a source, we are considering all data sets for sources that currently burn hazardous waste. Both recent and old data are instructive in assessing the capabilities of the control equipment at these operating facilities.

Finally, we screened out so-called ''normal'' emissions data from the MACT analyses. Although doing so may appear counterintuitive at first blush, one must consider that facility compliance will generally be based on operating limits established during the MACT performance test (except if compliance is based on a continuous emissions monitoring system (CEMS)). During these MACT performance tests, sources will likely operate under the same worst-case conditions as they did during trial burns and Boiler and Industrial Furnace (BIF) rule certification of compliance testing. Operating under worst-case conditions with respect to emissions and operating parameters gives operators a wide allowable envelope of operating limits needed to efficiently and economically operate the combustor and yet maintain compliance. Considering normal emissions data in the MACT analysis could inappropriately result in the Agency establishing a MACT standard based on normal emissions and conditions while the source would be operating under worst-case conditions to demonstrate compliance. Thus, emissions while complying with operating limits would be inappropriately constrained to below current normal emission levels, even for sources equipped with well-designed and operated MACT floor control.

B. PM as a Surrogate for Non-Hg Metals

The Agency proposed a MACT PM standard as a surrogate for non-D/F organic HAPs (that are adsorbed onto the PM) and for the metal HAPs not individually regulated under the proposed metal standards (i.e., Co, Mn, Ni, and Se). See 61 FR at 17376.

Since proposal, the Agency has reconsidered in the context of this joint RCRA-CAA rulemaking whether a MACT PM emission standard could serve as a surrogate for six non-Hg metal HAPs for which the Agency did propose specific standards—semivolatiles (Cd and Pb) and low volatiles (As, Be, Cr, and Sb). This issue arises, in part, because the risk assessment at proposal on the MACT standards estimated that the high-end individual lifetime cancer risks using 90th percentile metal emission levels were well below $10^{-6}$ for cement kilns and LWAKs. For incinerators, the highest estimated cancer risks exceeded 10–6 but were below $10^{-5}$.[9]

To evaluate PM as a surrogate for non-Hg metals in the context of this joint RCRA-CAA rulemaking, questions that must be addressed are: (1) Would a MACT PM standard control the six non-Hg metals to MACT emission levels in the special context of hazardous waste combustors; and (2) would there be significant health risk at MACT emission levels that would have to be addressed with RCRA controls (based at least in part on site-specific risk assessments using omnibus authority)?

Because, in the case of hazardous waste combustors, there are significant levels of metals in the hazardous waste-derived fuel being burned, the Agency has initially concluded that a MACT PM emission standard in this particular rule may not adequately control the six non-Hg metals to the nominal MACT emission levels. The residual risk that could result from emissions of some of the six non-Hg metals could be significant[10], and regulation of these problematic metals under RCRA would therefore be warranted. From an implementation standpoint, this result of mixed statutory controls is not desirable. Although establishing six additional specific limits on the non-Hg metals eliminates this particular implementation disadvantage, this would add to the compliance and implementation burdens on facility and regulator alike. Consequently, it does not currently appear appropriate to use PM as a surrogate for all six toxic, non-Hg metals.

In investigating this issue, however, we determined that antimony (Sb), one of the four low volatile metals, may not warrant direct control. That is, the MACT PM standard may serve as an adequate surrogate for Sb to ensure that it is not emitted at levels that pose a health risk.[11] We also considered whether beryllium (Be), another LVM, warranted control given that it is not generally present in significant concentrations in hazardous waste, and baseline emissions of Be do not appear to be posing a health hazard. Given that Be is a toxic carcinogen, however, direct MACT controls should be provided even if current feedrates (and emission rates) are low.

Only a preliminary analysis (see discussion below) was used to investigate whether some of the

[9] Note, however, that the example incinerators modeled for the risk assessment had relatively tall stacks which may not result in the higher ground level concentrations (and thus higher direct inhalation risk) that could result from small incinerators.

[10] This is at least partly because a PM control device alone does not give the same targeted degree of control for individual metals that a combination of metal feed control plus a PM control device does.

[11] Sb is a non-carcinogen with relatively low toxicity compared with the other five non-Hg metals, and would have to be present in hazardous waste (and emitted PM) at extremely high levels (perhaps over 1000 times the current levels) to pose a health hazard. Current data suggest that metals feedrates generally are either not increasing or increasing at much lower rates.

remaining semivolatile and low volatile metals—Cd, Pb, As, and Cr—may warrant only indirect control through a PM standard for any or all of the HWC source categories. We continue to believe that direct standards are warranted for these four metals (either individually or in volatility groups). For purposes of public comment, we have identified MACT standards for these individual metals in case individual standards are ultimately deemed more appropriate than continuing to group the metals by relative volatility. However, we remain concerned about the compliance and implementation complexities that would be introduced. (See the discussion below of revised SVM and LVM standards for each source category.)

We solicit further comment on how to ensure appropriate and effective control of non-Hg metal HAPs while ensuring that the regulatory scheme and associated compliance elements are implementable and not unnecessarily burdensome. Some of the pertinent issues are highlighted below for commenter response.

1. *Can PM serve as a surrogate for SVM and LVM?* A MACT PM standard would provide MACT emissions control technology (i.e., the air pollution control device) for non-Hg metals. This is because stack emissions of non-Hg metals in combustion gases are controlled by the PM control device. Thus, MACT control (i.e., the emission control device) for PM would also be MACT control for non-Hg metals.

However, emissions of non-Hg metals from HWCs are also controlled by the feedrate of non-Hg metals (for kilns, the feedrate of non-Hg metals in hazardous waste) in addition to the PM control device. Thus, a MACT PM standard alone may not result in control of non-Hg metals to MACT emissions levels because emissions of non-Hg metals will vary at a given PM level as feedrate varies (i.e., emissions of non-Hg metals will be a greater percentage of PM emitted as the feedrate rises).

Some commenters have argued that PM is not a good surrogate for non-Hg metals emissions. When sources (within a source category) are considered in the aggregate, a poor correlation between PM and non-Hg metals emissions appears to exist. This is because sources have various feedrates of the metals and because different types of PM control devices have different collection efficiencies for these metals.[12], [13] Nonetheless, at a given source with a given non-Hg metal feedrate, metal emissions will correlate with PM emission levels. Although the correlation will be different for more volatile versus less volatile metals, emissions of these metals will increase as PM emissions increase.

In summary, although there is a correlation between PM and non-Hg metal emissions on a facility-specific basis, and the MACT PM standard likely would ensure use of MACT emission control device for these metals, it may not ensure attainment of MACT emission levels of these metals. Given the potential for HWCs to emit high levels of some of these metals, metal-specific emission controls—MACT standards—are warranted either individually or in volatility groups.

2. Which non-Hg metals warrant specific control by establishing MACT emission standards? As an alternative to establishing MACT standards for SVM and LVM as proposed, we are re-evaluating which non-Hg metals warrant special control and whether to establish individual MACT emission standards for them.[14] As discussed above, our preliminary analysis indicates that standards may not be warranted for Sb. We are continuing to investigate whether any of the remaining metals—As, Be, Cd, Cr, and Pb—may not warrant direct emission standards but may warrant only indirect controls via the PM standard. Further, we are investigating how the metal standards should be structured: (1) MACT standards for individual metals; or (2) MACT standards for volatility groupings (SVM and LVM) if we determine, as currently contemplated, that direct standards for all five remaining metals are warranted (i.e., as proposed).

For cement kilns and LWAKs, we examined a comparison of potentially allowable emission levels for non-Hg metals under the BIF rule and actual allowable (i.e., levels emitted during Certificate of Compliance (CoC) testing) emission levels. (Note that the actual allowable levels are generally much higher than normal emission levels because sources spiked metals during CoC testing.) A wide margin exists—generally an order of magnitude or greater—between BIF potentially allowable emission levels and CoC allowable emission levels. This means that: (1) Cement kilns and LWAKs are not emitting these metals at levels posing a risk using BIF risk assessment procedures; and (2) cement kilns and LWAKs are feeding these metals at rates well below those that would be allowed under BIF risk-based limits and, thus, indirect PM control under MACT may similarly keep feedrates (and emission rates) of these metals low.

We also examined data on the percentage of emitted particulate matter that each non-Hg metal would have to comprise to pose a health risk, assuming BIF risk assessment procedures were applied. Under this analysis, Pb and Sb would have to comprise from 10–100 percent of emitted PM to pose a health risk. Data suggest that these percentages are not approached in today's operations by a wide margin.

These preliminary analyses were performed assuming BIF risk assessment procedures. Thus, our evaluation may not be representative of results that will be forthcoming shortly using updated, more detailed procedures for evaluating risks under the final MACT standards. For example, the risk assessment for this rule considers indirect exposure (i.e., ingestion and food-chain uptake) while BIF procedures consider only direct inhalation. On the other hand, BIF direct inhalation exposure assessment procedures are more conservative (i.e., result in a higher estimate of risk) than those that will be used for the final MACT standards because the Agency has revised those procedures in part to consider more realistic exposure scenarios. Nonetheless, the analyses discussed above are viewed as suggestive that regulation of each and every semivolatile and low volatile metal as proposed may not be warranted.

We could not perform similar preliminary analyses for incinerators because we do not have dispersion coefficients readily available that would be representative of the short stacks used by many on-site incinerators. However, a review of the emissions database indicates that, as expected, some incinerators—both commercial and on-site incinerators—emit much higher levels of these metals than cement kilns or LWAKs. Nonetheless, we may find (as may be the case for cement kilns and LWAKs) that Sb may not warrant a direct metal-specific standard for incinerators as well, either as part of the LVM group or an individual standard.

[12] In addition, metal collection efficiency of the PM control device varies at different metal feedrates.

[13] See, for example, comments submitted by Chemical Manufacturers Association, RCRA Docket # F–96–RCSP–FFFFF comment # RCSP–00128.

[14] Other metal HAPs (other than Hg and the six toxic metals covered at proposal) would be controlled indirectly by the PM standard and any individual or volatility group metal standards. This is essentially unchanged from the proposal.

C. Options for Controlling Emissions of Organic HAPs

Based on evaluation of the revised emissions database, the Agency is soliciting comment on options to control emissions of organic HAPs by: (1) Establishing MACT standards for carbon monoxide (CO) and/or HC emissions as surrogate indicators of good combustion conditions;[15] and (2) ensuring that sources achieve 99.99 percent destruction and removal efficiency (DRE).[16] These options are presented in Part Three: Implementation, Sections II and III, because the DRE issue has implementation implications, and the CO/HC issue relates to the DRE issue.

D. Accounting for Emissions Variability in Establishing Emission Standards

At proposal, the Agency used a statistical approach to identify an emission level that MACT floor control could achieve routinely considering that the emissions database was comprised of ''short-term'' test data. See 61 FR at 17366. To identify an appropriate standard, a computed variability factor considering within-test condition emissions variability was added to the log-mean of the highest test condition average for any source using floor control. The log-mean of the runs for the standard-setting test condition is the ''design level'—the emission level the source would be designed to meet to ensure emissions were less than the standard 99 percent of the time, assuming a source had average within-test condition emissions variability (average based on all sources using floor control).

We are concerned that this computed variability factor approach may be inappropriate in this particular rulemaking.[17] For example, this computed variability factor led to illogical results for the PM standards for incinerators and LWAKs. In the case of PM, the calculated standard using the computed variability factor is 50 percent higher than the current legally-mandated RCRA PM limit for incinerators. For LWAKs, using the variability factor results in a PM standard of approximately 0.04 gr/dscf (corresponding to a design level of 0.022 gr/dscf) nearly twice as high as any PM emission value in the entire LWAK database. Further, given that floor control would be a fabric filter, our engineering evaluation[18] (and the LWAK database itself) indicates that a fabric filter can readily achieve levels of 0.022 or below, not the calculated 0.04.

These inappropriate and illogical results may flow from either the variability factor itself or the test condition average identified as the standard-setting test condition (to which the variability factor is added). For example, the variability factor itself (which considers within-test conditions emissions variability) could be inappropriately high if there are outlier runs within test conditions that are not screened out. Although runs in many test conditions appear to be outliers (and analytical tests may show them to be outliers) it can be difficult to justify screening them out unless there is a specific technical explanation (e.g., unique design or operation feature or inadequacy) that can be identified. Unfortunately, this information is often not available for many potential outlier data.

As noted, identifying the standard-setting test condition inappropriately could be a factor. We have very limited information on the design, operation, and maintenance characteristics of the emission control devices and combustors. Accordingly, we have had to define MACT floor control very generically (e.g., ESP or fabric filter), as discussed below, without attempting to specify design, operation, and maintenance characteristics.

Given these concerns and the statute's direction to establish the maximum but achievable floor standard, we request comment on an alternative approach to account for emissions variability. This alternative has two elements. First, when a large data set from sources using floor control[19] exists, the range of emission levels from those sources should adequately reflect emissions variability. That is, a standard established as the highest test condition average for sources using floor control represents an emission level that the control technology is capable of achieving, considering normal variability in combustor operations, emission control device operations, and test methods. Where these data show that many sources using floor control can achieve well below the standard, this demonstrates that additional emissions variability considerations are not warranted. Source(s) with emission levels close to the standard should be able to determine how to emit at levels below the standard based on the specific design, operation, and maintenance information available to them, especially since many other sources with the same basic equipment are doing so.[20] Second, where only a small set of data from sources using floor control exists, the range of emission levels from these sources may be less likely to reflect emissions variability. In this case, consideration of an additional variability factor (to be added to the highest test condition average for a MACT-control facility) may be appropriate.

The impact of this alternative approach has been examined. We do not have a large data set in the expanded universe for two standards: D/F standards for incinerators equipped with waste heat recovery boilers and D/F standards for LWAKs. In each case, we have data from only three sources, and consequently floor control is based on the suite of controls used by all three sources.[21] If the data set were large, we would identify the floor level as the test condition with the highest run average. But, given the small data set, it is reasonable from an engineering vantage point to identify the standard as the highest single run for the highest test condition (when the unit was properly operated).

We discuss below engineering and data analysis methods and the resulting standards for each HAP and source category where a computed variability factor is not used to establish emission standards.

[15] The Agency proposed to establish MACT standards for both CO and HC, but solicited comment on whether a standard based on one surrogate or the other may be sufficient. See 61 FR at 17376.

[16] The Agency proposed to retain DRE as a RCRA standard because of concerns that it would be difficult to self-implement under MACT implementation procedures. See 61 FR at 17447. The Agency is reconsidering this issue and solicits comment on alternative approaches to ensure compliance with the DRE standard, including incorporating DRE as a MACT standard.

[17] See, for example, proposed rule (61 FR at 17367).

[18] See USEPA, ''Draft Technical Support Document for HWC MACT Standards (NODA), Volume I: MACT Evaluations Based on Revised Database'', April 1997.

[19] Or, in the case of LWAKs, where the data set is essentially complete (i.e., where we have data from all or most of the sources in the source category).

[20] No patterns in process design or operation in the information we have explain why some sources thought to be using floor control had significantly higher emissions than other sources thought to be using floor control. Where floor control is based on an emission control device, these high emitters are likely not in fact using floor controls—considering the suite of design, operation, and maintenance factors that affect performance of the control equipment but on which the Agency has no data. Where floor control is based on finite control such as combustion gas temperature or feedrate control, the high emitters may be experiencing emissions during the compliance test on the high end of the range of emissions variability.

[21] When data are available from fewer than 30 sources, MACT floor is defined as the median emission limitation achieved by the best five performing sources. Thus, the best performing three sources (representing the median (and better performers)) define MACT in this case.

Finally, we are using an engineering evaluation to identify a design level for each standard for purposes of estimating economic impacts and, for RCRA purposes, the risk associated with the design level for a given MACT standard. The design level is the emission level to which the control equipment must be designed to ensure compliance with the standard. For the RCRA risk analysis of the final MACT standards, we will analyze risks under the more realistic assumption that a source is emitting at the design level on average, rather than right at the standard all of the time.

Based on discussions with several air pollution control device vendors and facility operators, a design level of 70 percent of the standard is deemed appropriate because it is within the range of reasonable values that may be encountered—50 percent to 90 percent. To the extent that industry engineering experience suggest that a different design level assumption would be more typical and reasonable, we invite commenters to provide that information.

We also considered whether the design level as a percentage of the standard (i.e., design factor) should vary depending on whether the control is finite (e.g., temperature control or feedrate control) versus an emission control device that is affected by various parameters, or the type of emission control device (e.g., metals controlled by feedrate and an ESP or fabric filter). However, we do not have enough information to establish such tailored and case-specific design factors. If commenters supply sufficient information, we will consider using this approach.

As noted, we will use the design factor to estimate costs of retrofitting for all sources with emissions exceeding the standard. For these sources, we will estimate the costs of upgrading emission control equipment to meet the design level. For sources using floor control (i.e., sources in the expanded universe) that have emissions greater than the design level, however, we will not attribute retrofit costs for compliance. Given that these sources are using floor control and that, as discussed above, the large data set of sources using floor control and meeting the floor standard amply accounts for emissions variability, we will presume that these relatively high emissions for such floor-controlled sources represent the high end of the range of emissions variability. In other words, when these sources retest emissions under the same conditions, their emissions should meet the standard.

E. Re-Evaluation of Proposed MACT Standards for Incinerators

We discuss in this section the basis for the revised standards for incinerators that result from applying engineering and data analysis to the revised emissions database. We also discuss refinements to analytical approaches used in the proposal for identifying floor controls and levels.[22] A comparison of the originally proposed and potentially revised standards for existing and new sources is presented in the table below:

TABLE II.E.—REVISED STANDARDS FOR EXISTING AND NEW INCINERATORS [1]

| HAP or HAP surrogate | Existing sources | | New sources | |
|---|---|---|---|---|
| | Proposed standard | Revised standard | Proposed standard | Revised standard |
| D/F (ng TEQ/dscm) | 0.20 | 0.20 | 0.20 | 0.20 |
| Hg (μg/dscm) | 50 | 40 | 50 | 40 |
| PM (gr/dscf) | 0.030 | 0.015 | 0.030 | 0.015 |
| HCl/Cl2 (ppmv) | 280 | 75 | 67 | 75 |
| CO (ppmv) | 100 | 100 | 100 | 100 |
| HC (ppmv) | 12 | 10 | 12 | 10 |
| SVM (μg/dscm) | 270 | 100 | 62 | 100 |
| LVM (μg/dscm) | 210 | 55 | 60 | 55 |

[1] All emission levels are corrected to 7% $O_2$.

1. *Subcategorization considerations.* Since proposal, the Agency has refined potential options for subdividing the incinerator source category to determine if subdivided standards would be appropriate: (1) Small [23] versus large sources; (2) commercial versus on-site sources; and (3) small on-site sources versus large on-site and commercial sources. In large part, commenters believed that small, on-site incinerators should have less stringent standards to reduce costs of compliance. However, given that our analysis shows that the revised standards for the small on-site sources would either remain the same or be more stringent under these options, we continue to believe that subdividing would be inappropriate.[24]

We also received comments from the US Department of Energy (DOE) suggesting that DOE's mixed waste [25] incinerators had several unique features (discussed below) that would warrant subcategorization.[26] We are investigating whether DOE's incinerators pose unique implementation and compliance problems and therefore are considering several options for the final rule: (1) no subcategorization; (2) subcategorization for mixed waste incinerators; and (3) deferral of MACT regulation for mixed waste incinerators (with RCRA rules continuing to apply).

Under the No Subcategorization Option, we would find that the MACT controls and emission standards applicable to other incinerators are appropriate for DOE's mixed waste incinerators. Under this option we could still define special compliance requirements that account for any unique features of mixed waste incinerators.

[22] Additional details of the engineering and data analysis evaluations performed on the revised emissions database can be found in the Agency's background document: USEPA, ''Draft Technical Support Document for HWC MACT Standards (NODA), Volume I: MACT Evaluations Based on Revised Database'', April 1997.

[23] An analysis of gas flowrates in actual cubic feet per minute (ACFM) indicated that a maximum flowrate of 20,000 acfm would be within the range of values that could be selected to designate small versus medium incinerators. We performed a similar analysis at proposal and selected a flowrate of 23,127 to designate small incinerators. See 61 FR at 17372.

[24] The Agency requested at proposal comments on other means of reducing costs to small, on-site incinerators (e.g., waiving requirements for CEMS). We will consider all submitted comments on options to reduce costs on these units in the final rule.

[25] Mixture of low level radioactive waste and hazardous waste.

[26] See summary of DOE/EPA meeting at RCRA Docket # F–96–RCSP–FFFFF item # S00270.

Under the Subcategorization Option, we would find that because of unique design or operating features, the MACT controls or emission standards identified for other incinerators are not appropriate for mixed waste incinerators. MACT standards unique to these incinerators would be developed, and special compliance requirements could be defined.

Under the Deferral Option, we would determine that we do not have the resources to make an appropriate MACT determination on mixed waste incinerators in time to meet the schedule for the HWC rulemaking (i.e., the Phase I rule establishing MACT standards for incinerators, cement kilns, and LWAKs). Regulation of mixed waste incinerators would be deferred to the Phase II rule where the Agency will establish MACT standards for hazardous waste burning boilers, halogen acid furnaces, and sulfur recovery furnaces. The RCRA rules which now apply would continue to do so.

DOE suggests that its mixed waste incinerators have several unique features that would require subcategorization and special compliance standards:

- Each of DOE's four conventional incinerators meet the Agency's definition of small incinerators (i.e., <20,000 acfm gas flow rate), and one is batch-operated only once or twice a year with a gas flow rate of 3,000 acfm.
- Several mixed waste thermal treatment units meeting the Agency's definition of an incinerator are small vitrification devices designed to process metal bearing wastes and feed wastes with extremely low organic content.
- Given that most of the mixed waste incinerators are very small units, a mass-based emission limit would be more appropriate than a concentration-based emission limit.
- Approximately 95 percent of the mixed waste that is incinerated is ''legacy waste'' generated during production of nuclear weapons from 1943 until 1989 and may contain high levels of mercury that cannot be lowered by source reduction.
- Control of mercury emissions using activated carbon injection (ACI) would be problematic because the spent carbon would be a mixed waste, and if it contained more than 260 ppm of mercury, mercury retorting would be required under the Agency's land disposal restrictions even though there are no retorters in the country that manage mixed waste (and so a variance would have to be obtained under § 268.44).
- Given that CEMS are not yet demonstrated for multi-metals (and a CEMS requirement for mercury alone is also problematic for the final Phase I rule), compliance with MACT metal emission limits would be based on feedrate limits for metals in feedstreams, a potentially unworkable approach for mixed waste since sampling and analysis of radioactive feedstreams raises serious human health concerns.
- DOE has negotiated plans and agreements with States under Site Cleanup Agreements mandated by RCRA section 3021(b) and CERCLA section 120(e), and such plans and agreements would probably require renegotiation (and delay) to comply with the proposed MACT standards.

The Agency is continuing to investigate these issues and will make a determination regarding the appropriate regulatory option in the final rule.

2. *Dioxins and Furans (D/F)* a. MACT floor for existing sources. We proposed a MACT floor standard of ''0.20 ng TEQ/dscm or gas temperature at the PM control device ≤400°F'' based on floor control of temperature at the PM control device. During subsequent analysis of the revised database, we noticed again that incinerators equipped with waste heat boilers have significantly higher D/F emissions than other incinerators. This is likely because the heat recovery boiler precludes rapid temperature quench of combustion gases to a temperature of ≤400°F (usually with a wet scrubber), which would be floor control for non-waste heat boilers. Floor control for waste heat boilers would be rapid quench of combustion gases at the exit of the boiler to a temperature of ≤400°F.

Based on the revised database, the floor standard for waste heat boilers would be ''0.20, or 12 ng TEQ/dscm and a temperature of ≤400°F at the PM control device.'' Given that the waste heat boiler expanded universe (i.e., the entire database) is comprised of only three sources, the highest single run for the test condition with the highest run average is a reasonable floor level. (Note that if this were a large data set, we would define the floor level simply as the highest test condition average.) This floor level is 50 percent higher than the highest test condition average, and thus appears to be a level that waste heat boilers should be able to meet routinely using floor control.

The floor standard for non-waste heat boilers would be ''0.20, or 0.40 ng TEQ/dscm and a temperature of ≤400°F at the PM control device.'' This standard is based on arraying emission levels for sources using floor control and screening out four test conditions with anomalously high emissions. Three of these test conditions were from sources for which we had other test conditions with emissions averages well below 0.40 ng TEQ.

We did not originally propose separate standards for waste heat boilers because the floor standard at proposal was ''0.20 ng TEQ/dscm or temperature at the PM control device of <400°F.'' Waste heat boilers could meet that standard, and moreover, we proposed a BTF standard of 0.20 ng TEQ/dscm for all incinerators (a preference we do not depart from in today's notice). Today, however, we are presenting the option of stating the standard in the form of a TEQ level combined with a maximum temperature at the PM control device. This form of the standard is consistent with the revised data, and would result in somewhat lower emissions. This is because, without the TEQ limit, some sources could exceed that TEQ level at the specified temperature.

b. BTF considerations for existing sources. Incinerators can be equipped with ACI at temperatures ≤400 °F to achieve D/F levels below 0.20 ng TEQ/dscm. Given the limited application of the technology to control D/F emissions from hazardous waste incinerators and given that control efficiency is likely to decrease at D/F emission levels below 0.20, a BTF standard of 0.20 ng TEQ/dscm would continue to be appropriate. See proposal for extended discussion, 61 FR at 17382.

Another option arising from the refinement of our original analysis is to establish a BTF standard for waste heat boilers at ''0.20, or 0.40 ng TEQ/dscm and a temperature of ≤400 °F at the PM control device'', and to remain at the floor standard for non-waste heat boilers. These standards would ensure that most, but not all, sources would have emissions ≤0.20 ng TEQ/dscm. Given that only a few sources would need to take additional measures to get their emissions below 0.20, however, it would be appropriate to establish a 0.20 BTF standard, assuming this level remains appropriate after considering statutory factors for establishing standards more stringent than the floor.

c. MACT floor for new sources. At proposal, we identified the same floor control for new sources as for existing sources: wet scrubbing and ≤400 °F at the PM device. This is because the sources with the lowest emissions used this control. In re-evaluating the database for this NODA, however, an engineering evaluation may be more appropriate to identify ACI as floor control because one source (i.e., the single best controlled source) uses it. Even though most sources using rapid quench by wet scrubbing can achieve D/F levels less than 0.20 TEQ, some

sources using wet scrubbing have higher D/F levels. ACI operated at 400 °F or lower can universally achieve D/F levels of 0.20 ng TEQ/dscm or less and is thus the better performing technology. (Note that waste heat boilers cannot use rapid quench of combustion gases but can use ACI.)

Although the source equipped with ACI (Waste Technologies Industries) is achieving D/F levels of 0.07 ng TEQ/dscm, we believe that it is appropriate to conclude that ACI can routinely achieve a standard of 0.20 ng TEQ/dscm given the limited application to date of the technology for hazardous waste incinerators and the uncertainties about how much ACI control efficiency is reduced at extremely low D/F emission concentrations. However, we specifically invite comment on the potential levels that can be reached with ACI, and on industry-wide achievability of 0.07 ng TEQ/dscm as the floor for new sources.

d. *BTF considerations for new sources.* At proposal, BTF for new sources was based on performance of ACI given that floor control was based on performance of rapid quench. Under today's analysis, MACT floor for new sources would be based on ACI. Although carbon beds would be able to achieve lower emissions, they are not thought to be cost-effective (particularly if the floor for new sources was well below 0.20 ng TEQ/dscm), and a BTF standard would likely not be appropriate.

3. *Mercury (Hg).* a. MACT floor for existing sources. At proposal, the Agency identified floor control as either (1) feedrate control of Hg at an maximum theoretical emission concentration (MTEC) not to exceed 19 μg/dscm, or (2) wet scrubbing with feedrate control of Hg at an MTEC not to exceed 51 μg/dscm. We proposed a floor standard of 130 μg/dscm.

Mercury emissions from incinerators are currently controlled by limiting the feedrate of Hg combined with some removal by air pollution control systems (APCS). There are two APCS techniques currently used by hazardous waste incinerators (HWIs) to control Hg: wet scrubbers and ACI. Although primarily intended for acid gas control, nearly all incinerators employ wet scrubbers that capture the soluble forms of Hg species (e.g., mercury salts). ACI is used by one incinerator for control of Hg (and D/Fs). The Agency also has data from one additional facility using ACI; however, these data were generated during a demonstration testing program.

Review of the updated Hg data in the revised database shows that feedrates vary substantially. Generally the higher feedrates are the result of Hg spiking. We re-evaluated the revised database for today's notice using a data analysis method similar to that used at proposal to determine floor levels: (1) Rank Hg emissions from lowest to highest; (2) define as floor control the air pollution control device (APCD) and associated highest Hg MTEC for the 6 percent of sources with the lowest emissions; and (3) define as the floor standard the highest test condition average emissions of any test condition operated at or below the Floor MTEC. Using the revised database, MACT control would be defined as wet scrubbing with a MTEC of 50 μg/dscm, and the revised floor standard would be 40 μg/dscm. Nearly 60 percent of HWIs for which we have data are achieving this level.

b. BTF considerations for existing sources. The Agency originally considered flue gas temperature reduction to 400 °F or less followed by ACI as the BTF option for improved Hg control. As discussed at proposal, EPA believes that ACI incinerator applications can achieve Hg emission reductions greater than 90 percent. In the Notice of Proposed Rulemaking (NPRM), the Agency proposed a BTF standard of 50 μg/dscm.

As mentioned above for existing sources, the Agency has in its database Hg data from one facility (with two test conditions) currently employing ACI as a permanent application. Both test conditions achieved Hg removal efficiencies between 97 and 98 percent at varying Hg feedrates. The Agency also has data from a second facility generated during a demonstration test that show about a 98 percent effectiveness at capturing Hg though at one of the highest feedrates in the database. These data, in addition to ACI applications on full-scale municipal waste combustors and medical waste incinerators,[27] support the Agency's assumption that ACI systems can readily achieve capture efficiencies of 90 percent or more on incinerators.

In light of the revised database, EPA can initially identify 4 μg/dscm as the potential BTF standard based on ACI and flue gas temperature reduction to 400 °F or less. This is based on a source achieving the floor level of 40 μg/dscm and then applying ACI with a 90 percent removal efficiency. However, a BTF level of 4 μg/dscm will likely raise significant cost-effectiveness considerations. Given that the floor level discussed today would be substantially lower than the proposed floor, a BTF standard of 4 μg/dscm would be less cost-effective than the BTF levels of 30 μg/dscm and 5 μg/dscm analyzed at proposal.

c. MACT floor for new sources. At proposal, the floor control for new sources was similar as for existing sources: wet scrubbing with feedrate control of Hg at an MTEC not to exceed 51 μg/dscm. We proposed a floor standard of 115 μg/dscm.

As discussed for existing sources, both wet scrubbing and ACI are used for Hg control. The single best performing source for Hg control in our database, measured by lowest emissions, is a wet scrubber with Hg feedrate, expressed as a MTEC, of 50 μg/dscm. Since MACT for new HWIs is identical to MACT for existing sources, analysis of emissions using these or better controls would result in a floor level for new HWIs of 40 μg/dscm.

The Agency also considered a MACT floor based on ACI, a technology more effective at Hg control than typical wet scrubbing applications. The three test conditions in the database indicate that ACI was effective in removing over 97 percent of Hg. However, the Hg feedrate during the single best ACI test condition was higher than the feedrate associated with the single best performing wet scrubber. In fact, Hg feedrates during the ACI test conditions ranged from 5 to 300 times greater than the wet scrubber MTEC level. To determine an emissions level that ACI could routinely achieve, we applied a capture efficiency of 90 percent to a Hg MTEC of 500 μg/dscm, a typical feedrate identified by a MTEC breakpoint analysis. Thus, using the revised database, the floor level for the ACI evaluation would be 50 μg/dscm which is slightly higher than the wet scrubber floor analysis. The floor for new sources based on the wet scrubber evaluation appears to be more appropriate because the floor level for new sources should be at least as stringent as for existing sources.

d. BTF considerations for new sources. At proposal, BTF for new sources was based on ACI. Similar to existing sources, the Agency re-considered the use of ACI as the BTF technology. We identified a level of 4 μg/dscm as a potential BTF standard for new sources based on ACI and flue gas temperature reduction to 400 °F or less. As discussed for existing sources, this BTF level based on ACI will likely raise significant cost-effectiveness considerations.

4. *Particulate Matter (PM).* a. MACT floor for existing sources. At proposal, EPA defined floor control based on either (1) a fabric filter with an air-to-

[27] USEPA, Section 5 of ''Draft Technical Support Document For HWC MACT Standards, Volume III: Selection of Proposed MACT Standards and Technologies,'' February 1996.

cloth ratio of 10 acfm/ft$^2$, or (2) a venturi scrubber used with an ionizing wet scrubber (IWS). The resulting floor level, which included a statistically-derived variability factor, was 0.107 gr/dscf. Since this level is higher than the current federal standard of 0.08 gr/dscf, the Agency identified the floor level as 0.08 gr/dscf.

Today, in light of the revised database, EPA is taking comment on two refined engineering and data analysis methods to identify the PM MACT floor for HWIs. The evaluation technique and results from both analyses are presented below.

For the first (and possibly EPA's preferred) data method, EPA would use the following steps to identify the PM floor level: (1) Identify all PM control equipment currently in use within the HWI source category, regardless of measured performance; (2) identify as MACT control those PM APCD applications used by at least 6 percent of sources that could be expected to routinely and consistently achieve superior PM performance relative to all control strategies considered; and (3) identify an emissions level that well-designed, operated and maintained MACT controls can readily achieve based on generally-accepted technical and engineering information.

Using this approach, MACT controls would be fabric filter, IWS, and ESP. Based on the revised database, EPA's evaluation of the MACT floor performance level readily achievable by a well designed, operated and maintained MACT control device (fabric filter, IWS, ESP) is 0.015 gr/dscf. Note that even though the PM MACT floor is based on fabric filter, IWS and ESP APCDs, a source is not required to employ MACT floor control but rather only achieve the standard.

Approximately 75 percent of sources employing MACT (measured by available test condition data) currently are achieving 0.015 gr/dscf. An evaluation of the remaining PM data exceeding 0.015 gr/dscf from sources ostensibly employing MACT indicate that 20 to 40 percent of these data may be inappropriate for inclusion (e.g., an incinerator with multiple test conditions well below and a few above 0.015 gr/dscf). Generally, over 50 percent of HWIs, regardless of the PM control currently employed, are currently achieving a 0.015 gr/dscf level.

The second refined data evaluation method EPA is considering for PM Floor analysis is similar to the standard-setting process applied at proposal. This evaluation is a four-step process: (1) Rank all PM emissions data and identify the MACT floor controls used by the best performing 6 percent of sources; (2) develop the expanded universe to include all sources employing MACT control, without further characterizing MACT control (e.g., air-to-cloth ratio of the fabric filter, specific collection area for an ESP) as done in the proposal because of the absence of reliable detailed design, operating, and maintenance information in the database; (3) for each PM test condition, evaluate the corresponding SVM system removal efficiency (SRE) and screen out sources that have relatively poor SREs (i.e., outliers above a breakpoint in the data array), which are indicators of poor design, operation, and maintenance characteristics of the MACT controls at the source; and (4) identify the MACT floor equal to the highest test condition average of all test conditions in the PM expanded universe.

Using this alternative evaluation approach as applied to the revised database, MACT would be based on any of the following PM controls: (1) Fabric filter, (2) IWS, (3) ESP, or (4) venturi scrubber burning liquid low ash wastes. The resultant MACT floor would be 0.029 gr/dscf. Over 70 percent of HWIs, regardless of the PM control equipment employed, are currently achieving this level. A potential drawback of using this second alternative evaluation technique is that nearly 75 percent of the available incinerator PM data do not have corresponding SVM data such that a SRE could be calculated. This impacts our ability to identify and screen out poorer performing MACT APCDs from the expanded universe, a critical step in evaluating an appropriate performance level achievable by MACT control. As a result, this evaluation technique may not be appropriately identifying a PM floor level representative of MACT. For these reasons, the first data method evaluation appears to be more reliable and sound for the Agency's revised database. The Agency requests comments on the both data analysis methods presented.

In the NPRM, the Agency proposed that sources maintain continuous compliance with the PM standard through the use of a PM CEMS. A decision whether to require incinerators to install a PM CEMS will be made at the completion of an on-going demonstration testing program to determine if at least one PM CEMS can meet the proposed performance specifications. Since the floor standards discussed above were based on manual test method data, the Agency will re-evaluate at the completion of the CEMS testing program whether these PM floor standards would be appropriate in the event that the final rulemaking requires continuous compliance with a PM CEMS. The Agency will notice the results and conclusions of the demonstration test program in the docket for the HWC rule.

b. BTF considerations for existing sources. In the NPRM, the Agency proposed a BTF level of 0.030 gr/dscf and solicited comment on an alternative BTF level of 0.015 gr/dscf based on improved PM control.

Based on the revised database, we can evaluate a reduced PM emissions level lower than 0.015 gr/dscf as the BTF standard (in conjunction with corresponding BTF reductions in SVMs and LVMs) for existing HWIs. This would require an improved PM collection technology such as the use of more expensive bag material for fabric filters or increased plate area or power input to an ESP. Given that the alternative floor level analyses presented today would be substantially lower than the proposed floor and BTF levels, significant cost-effectiveness considerations come into play and suggest that a BTF standard may not ultimately prove to be appropriate.

c. MACT floor for new sources. At proposal, the Agency defined floor control as a fabric filter with an air-to-cloth ratio of less than 3.8 acfm/ft$^2$. The proposed floor level was 0.039 gr/dscf.

Based upon our evaluation of the revised database, the floor control and emission level discussed above for existing sources would also appear to be appropriate for new sources. If this eventuates, then MACT floor control would be a well-designed and properly operated PM control device (e.g., fabric filter, IWS, or ESP), and the MACT floor for new HWIs would be around 0.015 gr/dscf.

d. BTF considerations for new sources. At proposal, EPA proposed the same BTF standard of 0.030 gr/dscf (based on improved PM control) as that proposed for existing sources.

Today, given the cost-effectiveness considerations discussed above for existing sources, the Agency is inclined to think that a BTF standard beyond a PM floor level of 0.015 gr/dscf (and corresponding BTF reductions for SVMs and LVMs) would not ultimately prove to be acceptable.

5. Semivolatile metals (SVM) (cadmium and lead) a. MACT floor for existing sources. At proposal, EPA defined floor control as either (1) a venturi scrubber with a MTEC not to exceed 170 μg/dscm, (2) a combination of an ESP and wet scrubber with a MTEC not to exceed 5,800 μg/dscm, or (3) a combination of venturi scrubber and IWS with a MTEC less than 49,000

μg/dscm. The proposed floor level was 270 μg/dscm.

HWIs use a combination of good PM control and limiting hazardous waste feedrates to control SVM emissions. SVMs, which typically vaporize at combustion chamber temperatures and recondense onto small-size particulates in the APCD, are controlled most efficiently by technologies that are effective at capturing fine PM. EPA's revised database shows that SVM emissions vary substantially from 2 to nearly 30,000 μg/dscm.

The refined data analysis method used by EPA to evaluate and identify a MACT floor would be based directly on the results from the PM floor analyses discussed above. As mentioned there, a floor of 0.015 gr/dscf would appear to represent the MACT floor for HWIs based on good PM control. Since SVMs are controlled, in part, by a well-designed and operated PM control devices, it follows that sources achieving this PM performance level at typical SVM feedrates should also be controlling SVMs emissions.

Therefore, in its refined SVM analyses of the revised database, the Agency first considers all SVM data when corresponding PM measurements are below 0.015 gr/dscf. To identify the SVM floor from these data, we would determine either the highest SVM test condition average or the level that excludes sources achieving substantially poorer SVM control than the majority of sources. It is most likely appropriate to use the latter approach—excluding sources with significantly poorer SVM performance—because their higher SVM emissions may be the result of exceedingly high SVM feedrates or some other factor that cannot be readily identified with available information (e.g., sampling or analysis anomalies). An SVM emissions breakpoint analysis is the approach for excluding these poorer performing test conditions.

Applying this evaluation technique to the revised HWI SVM database results in a MACT floor of 100 μg/dscm. Approximately 53 percent of all HWI SVM test condition data, regardless of PM emissions level, are currently achieving this emissions level.

As discussed above for PM, the Agency is soliciting comment on an alternative evaluation of the HWI PM data which identified a floor of 0.029 gr/dscf. Conducting the same SVM floor analysis discussed above when PM measurements were below 0.029 gr/dscf also results in the same floor of 240 μg/dscm. Approximately 60 percent of all HWI SVM test condition data, regardless of PM emissions level, are currently achieving this emissions level.

Finally, as discussed in an earlier section, a preliminary analysis indicates that MACT standards may not be warranted for one HAP metal, antimony. Since the number of metals being considered for MACT standards may change, we are investigating the appropriate structure of metals standards (e.g., retain the volatility groups or establish individual metals standards). Using the refined method discussed above for SVM, we analyzed the revised database with respect to Cd and Pb data. The floor analysis corresponding to PM measurements below 0.015 gr/dscf would result in the following floor levels: Cd 20 μg/dscm, and Pb 95 μg/dscm. The alternative data analysis method for individual metals when corresponding PM measurements were below 0.029 gr/dscf would result in the following floor levels: Cd 57 μg/dscm, and Pb 95 μg/dscm.

b. BTF considerations for existing sources. In the NPRM, the Agency considered a BTF standard for SVMs based on improved PM control below 0.030 gr/dscf. However, the Agency concluded that a BTF standard would not be cost-effective given that the floor level alone would result in an estimated 94 percent SVM reduction in emissions.

As discussed for PM BTF considerations, we also re-evaluated the possible appropriateness of using a reduced PM emissions level based on improved PM control as a BTF standard (taking into consideration corresponding BTF reductions in SVMs) for existing HWIs. Given that the alternative PM floor level analyses presented today would be lower than the proposed floor and BTF floor levels, significant cost-effectiveness considerations emerge and suggest that a BTF standard for either SVMs or individual Pb or Cd standards based on improved PM control may not ultimately prove to be cost-effective.

If, however, the revised risk assessment yet to be conducted would show significant risk at a SVM floor standard of either 100 μg/dscm or 240 μg/dscm, which are floor levels from the two data analysis methods discussed above, the Agency will determine whether a BTF standard based on control of SVM feedrate to levels below those at the floor would be appropriate. This feedrate limitation would in turn reduce SVM emissions. The BTF standard and the corresponding level of feedrate control would be dictated by considerations of cost-effectiveness and the need to establish more stringent RCRA-related controls.

c. MACT floor for new sources. At proposal, the Agency defined floor control, based on the best performing source, as a combination of venturi scrubber and IWS with a MTEC less than 49,000 μg/dscm. The proposed floor level for new HWIs was 240 μg/dscm.

Based upon our re-evaluation of the database, the floor control and emission level discussed above for existing sources for PM and SVMs would also appear to be appropriate for new sources. In this event, MACT floor control would be a well-designed, operated and maintained PM control device (e.g., fabric filter, IWS, or ESP) achieving the PM floor level of 0.015 gr/dscf, and the MACT floor would be around 100 μg/dscm.

As discussed above, the Agency is soliciting comment on an alternative evaluation of the revised SVM database which concludes that MACT floor control is a well designed, operated and maintained PM control device (i.e., fabric filter, IWS, or ESP) achieving a PM level of 0.029 gr/dscf. The floor analysis considering all revised SVM data when corresponding PM measurements are below 0.029 gr/dscf results in a floor for new sources of 240 μg/dscm.

Finally, we have evaluated what individual metal floor levels for new sources would be. When PM measurements are below 0.015 gr/dscf, the analysis would result in floor levels for Cd of 20 μg/dscm and for Pb 95 μg/dscm. Under the alternative data analysis method for individual metals when PM measurements were below 0.029 gr/dscf, floor levels would be 57 μg/dscm for Cd and 95 μg/dscm for Pb.

d. BTF considerations for new sources. In the NPRM, the Agency proposed a BTF level of 62 μg/dscm based on improved PM control below 0.030 gr/dscf.

As discussed for PM, a reduced PM emissions level based on improved PM control could be considered in evaluating a potential BTF standard (considering corresponding BTF reductions in SVMs and LVMs) for new HWIs. Because the PM floor level presented today would be substantially lower than the proposed floor and proposed BTF floor level, cost-effectiveness issues are again raised and suggest that a BTF standard for either SVMs or individual Pb or Cd standards based on improved PM control may likewise ultimately prove to be inappropriate.

6. Low volatile metals (LVM) (arsenic, beryllium, and chromium). a. MACT Floor for Existing Sources. At proposal, EPA defined floor control as either (1) a venturi scrubber with a MTEC not to exceed 1,000 μg/dscm, or (2) an IWS with a MTEC less than 6,200 μg/dscm.

The proposed floor level was 210 μg/dscm, which included antimony.

HWIs use a combination of good PM control and limiting hazardous waste feedrates to control LVM emissions. LVMs are less likely to vaporize at combustion temperatures and therefore partition primarily to the residue or adsorb onto particles in the combustion gas. EPA's database shows that LVM emissions from HWIs vary widely from 1 to over 130,000 μg/dscm.

To identify a LVM MACT floor, the Agency used the same data analysis method applied to the revised SVM database. As was determined in the PM analysis of the revised database, a floor of 0.015 gr/dscf represents MACT for HWIs based on good PM control. Considering all LVM data from sources achieving a PM level 0.015 gr/dscf or better, the Agency's evaluation of the revised HWI data results in a LVM floor of 55 μg/dscm (excluding sources above a breakpoint and therefore achieving substantially poorer LVM emissions than the majority of sources). Over 70 percent of HWI LVM test condition data are currently achieving this emissions level.

As discussed earlier, the Agency is soliciting comment on an alternative evaluation of the revised HWI PM data which identified a floor of 0.029 gr/dscf. Evaluating the revised LVM data using this method results in a LVM floor of 190 μg/dscm. Approximately 90 percent of HWI LVM test condition data are currently achieving this level.

Finally, as discussed in an earlier section, a preliminary analysis indicates that MACT standards may not be warranted for one HAP, antimony. Since the number of metals being considered for MACT standards may change, we are investigating the appropriate structure of metals standards (e.g., retain the volatility groups or establish individual metals standards). Using the refined method discussed above for LVM, we analyzed the revised database with respect to As, Be, and Cr (hexavalent). The floor analysis corresponding to PM measurements below 0.015 gr/dscf results in the following floor levels: As 21 μg/dscm, Be 2 μg/dscm, and Cr (hexavalent) 3 μg/dscm. The alternative data analysis method for individual metals when corresponding PM measurements were below 0.029 gr/dscf results in the following Floor levels: As 21 μg/dscm, Be 2 μg/dscm, and Cr (hexavalent) 5.5 μg/dscm.

The Agency is concerned that some of the potential floor standards for some individual metals (e.g., Be, Cr (hexavalent)) may be present at levels approaching practical quantitation limits (PQLs). PQLs are the lowest level of quantification that the Agency believes a competent analytical laboratory can be expected to reliably achieve. The Agency will investigate whether this issue may need to be addressed in the development of any individual metals standards that may be considered for the final rulemaking. We invite comment on the issue of PQLs and LVM BTF standards.

b. BTF considerations for existing sources. In the NPRM, the Agency considered a BTF standard for LVMs based on improved PM control below 0.030 gr/dscf. However, the Agency concluded that a BTF standard would not be cost-effective given that the floor level alone would result in an estimated 91 percent LVM reduction in emissions.

As discussed for PM, a reduced PM emissions level based on improved PM control could be considered in evaluating a potential BTF standard (taking into consideration corresponding BTF reductions in LVMs and SVMs) for existing HWIs. Because the PM floor level presented today would be substantially lower than the proposed floor and BTF floor levels, a BTF standard for either LVMs or individual As, Be, and Cr (hexavalent) standards based on improved PM control would raise significant cost-effectiveness concerns and may not be appropriate.

If, however, the revised risk assessment yet to be conducted would show significant risk at a LVM floor standard of either 55 μg/dscm or 190 μg/dscm, which are floor levels from the two data analysis methods discussed above, the Agency will determine whether a BTF standard based on control of LVM feedrate to levels below those at the floor would be appropriate. This feedrate limitation would in turn reduce LVM emissions. The BTF standard and the corresponding level of feedrate control would be dictated by considerations of cost-effectiveness and the need to establish more stringent RCRA-related controls.

c. MACT floor for new sources. At proposal, the Agency defined floor control, based on the best performing source, as a venturi scrubber with a MTEC less than 1,000 μg/dscm. The proposed floor level for new HWIs was 260 μg/dscm.

Based upon our re-evaluation of the database, the floor control and emission level discussed above for existing sources for PM and LVMs would also appear to be appropriate for new sources. MACT floor control is a well-designed, operated and maintained PM control device (e.g., fabric filter, IWS, or ESP) achieving the PM floor level of 0.015 gr/dscf, and analysis of the revised data results in a LVM MACT floor of 55 μg/dscm.

As discussed above, the Agency is soliciting comment on an alternative evaluation of the revised LVM database which identifies MACT floor control as a well-designed, operated and maintained PM control device (e.g., fabric filter, IWS, or ESP) achieving a PM level of 0.029 gr/dscf. The floor analysis considering all revised LVM data when corresponding PM measurements are below 0.029 gr/dscf results in a floor for new sources of 190 μg/dscm.

Finally, individual metal floor levels for new sources, when PM measurements are below 0.015 gr/dscf, are: As 21 μg/dscm, Be 2 μg/dscm, and Cr (hexavalent) 3 μg/dscm. Under the alternative data analysis method for individual metals when PM measurements are below 0.029 gr/dscf, the floor levels are: As 21 μg/dscm, Be 2 μg/dscm, and Cr (hexavalent) 5.5 μg/dscm. [Note: The same PQL concerns would be present here as well.]

d. BTF considerations for new sources. In the NPRM, the Agency proposed a BTF level of 60 μg/dscm based on improved PM control below 0.030 gr/dscf.

As discussed for PM BTF considerations, the Agency considered a reduced PM emissions level based on improved PM control as the BTF standard (taking into consideration corresponding BTF reductions in LVMs and SVMs) for new (and existing) HWIs. Because the alternative PM floor level presented today is substantially lower than the proposed floor and BTF floor levels, a BTF standard for either LVMs or individual As, Be, or Cr (hexavalent) standards based on improved PM control may be inappropriate in light of the cost-effectiveness issues inherent in this scenario.

7. *Hydrochloric Acid and Chlorine (HCl/Cl2).* a. MACT Floor for Existing Sources. At proposal, the Agency defined floor control as wet scrubbing with a chlorine MTEC (i.e., maximum theoretical emission concentration) up to 2.1E7 ''μg/dscm and proposed a floor standard of 280 ppmv. While evaluating the revised database, we investigated another data analysis method whereby floor control would be defined as wet scrubbing combined with chlorine feedrate control to achieve an emission level of 75 ppmv.[28] Under this method,

[28] Although a specific feedrate (i.e., MTEC) level is not used to define MACT floor, feedrate control is part of floor control to achieve the 75 ppmv standard using wet scrubbing (i.e., a source would probably not be able to feed chlorine at extremely high rates and still achieve the standard using wet scrubbing). Further, as discussed below in the text,

emissions data from sources using wet or dry scrubbing were arrayed from lowest to highest (without explicit regard to chlorine feedrate) and sources achieving substantially poorer HCl/Cl2 control than other sources were screened from the analysis. Accordingly, after five of 48 test conditions were screened from the analysis for anomalously high emission rates,[29] the floor standard was established as the highest remaining test condition average—75 ppmv.[30] Nearly 90 percent of test conditions[31] in the revised database have emission levels below 75 ppmv.

The Agency requests comment on whether this alternative approach to define floor control and a floor level would be more appropriate than the proposed approach.

b. BTF considerations for existing sources. At proposal, the Agency determined that a BTF standard would not be warranted. Specifically, the Agency noted that risk from emissions at the floor standard would not likely trigger the need for additional control under RCRA.

Although that may prove to be the case as well for the alternative standard discussed in today's notice (i.e., 75 ppmv), the risk assessment accompanying the final rule will consider incinerators with short stacks and will also consider acute risk from HCl and Cl2 during short-term exposures. The risk assessment at proposal modeled emissions only from incinerators with relatively tall stacks, and did not consider acute exposure to HCl and Cl2. If, however, the revised risk assessment yet to be conducted shows significant risk at a floor standard of 75 ppmv, the Agency will determine whether a BTF standard would be appropriate considering cost-effectiveness of such a standard and the need to establish more stringent controls under RCRA. In that case, BTF control could be based on a minimum system removal efficiency (e.g., 99.9 percent) and/or control of chlorine feedrate.

c. MACT floor for new sources. At proposal, the Agency identified floor control for new incinerators as wet scrubbing with an MTEC of 1.7E7 μg/dcsm See 61 FR at 17388. Although the floor control for new sources was based on the single best performing source and was more stringent than floor control for existing sources, the floor emission level was the same for new and existing sources: 280 ppmv.

When evaluating the revised emissions database considering various data analyses methods for today's notice, we determined that floor control for new sources should be the same as for existing sources: Wet scrubbing with chlorine feedrate control to achieve an emission level of 75 ppmv. This is state-of-the-art control for these HAPs. Accordingly, the floor standard for new sources would be 75 ppmv under this data analysis method.

d. BTF considerations for new sources. The Agency proposed BTF control for new incinerators as 99 percent SRE and a BTF standard of 67 ppmv. This standard was based on applying 99 percent reduction to the test condition in the database with the highest average emission without an emission control device (i.e., 1100 ppmv). Then, considering other factors including a computed emissions variability factor, the Agency determined that a BTF standard of 67 ppmv would be appropriate.

In retrospect, as we discussed above, virtually all sources are already equipped with some form of scrubber and 90 percent are achieving emission levels of 75 ppmv or below. Thus, this would be an appropriate floor control and standard for new sources. As discussed above for existing sources, a BTF standard appears to be unnecessary, unless the upcoming final risk analysis indicates that more stringent controls under RCRA would be warranted. A BTF standard could be based on a minimum system removal efficiency (e.g., 99.9 percent) and/or control of chlorine feedrate.

8. *Carbon Monoxide (CO).* As proposed, the Agency continues to believe that floor control for CO (as a surrogate for organic HAPs) for both existing and new sources would be operation under good combustion practices. The preponderance of the revised emissions data indicate that a floor standard of 100 ppmv over an hourly rolling average (HRA) would be readily achievable. In addition, the Agency continues to believe that a BTF standard for CO based on better good combustion practices is likely to raise significant cost-effectiveness considerations.

9. *Hydrocarbons (HC).* The Agency proposed that floor control for HC (as a surrogate for otherwise unaddressed organic HAPs) for both existing and new sources would be operated under good combustion practices and that a floor standard of 12 ppmv over an hourly rolling average (HRA), would be appropriate. In evaluating the revised emission database for today's notice, we used the same general approach for HC as at proposal—the entire database was arrayed from the lowest to the highest emission levels and assumed that test conditions beyond a breakpoint were not operated under good combustion practices. Based on that analysis, a floor level for HC of 10 ppmv, HRA, results. (This 10 ppmv standard does not include a variability factor for reasons discussed above, unlike the proposed standard of 12 ppmv that did.) Not only does the revised database show that the preponderance of the data are below 10 ppmv, but engineering experience and other engineering information suggests that a HC level of 10 ppmv is readily achievable using good combustion practices.

As discussed at proposal, the Agency continues to be concerned about cost-effectiveness considerations related to BTF controls for HC based on operating under better combustion practices.

F. Re-Evaluation of Proposed MACT Standards for Cement Kilns

We discuss in this section the basis for the revised standards for cement kilns that result from applying engineering and data analysis to the revised emissions database.[32] A comparison of the proposed and potentially revised standards for existing and new sources is presented in the table below:

sources with anomalously high emissions were screened from consideration. One reason that a source may have anomalously high emissions is that it may be feeding unusually high levels of chlorine.

[29] The anomalously high emissions could have been caused by: (1) Poor design, operation, or maintenance of the scrubber, and thus the device would not represent MACT (e.g., a dry scrubber was screened from the analysis because dry scrubbers are generally less efficient than wet scrubbers); (2) unusually high chlorine feedrates; or (3) sampling or analysis anomalies.

[30] The floor standard under this alternative analysis method—75 ppmv—would be substantially lower than the proposed floor standard—280 ppmv—even though feedrate control of chlorine would not be used explicitly to help define floor control under this alternative method because, to identify the proposed standard, the Agency: (1) Selected as the standard-setting test condition the highest test condition for sources appearing to be using floor control without screening anomalous test conditions; and (2) added a computed emissions variability factor to emissions from that standard-setting test condition.

[31] Considering approximately 50 test conditions where emissions levels on both HCl and Cl2 were available.

[32] Additional details of the engineering and data analysis evaluations performed on the revised emissions database can be found in the Agency's background document: USEPA, ''Draft Technical Support Document for HWC MACT Standards (NODA), Volume I: MACT Evaluations Based on Revised Database'', April 1997.

TABLE II.F.—REVISED STANDARDS FOR EXISTING AND NEW CEMENT KILNS

| HAP or HAP Surrogate | Existing sources | | New sources | |
|---|---|---|---|---|
| | Proposed standard | Revised standard | Proposed standard | Revised standard |
| D/F (ng TEQ/dscm) | [1] 0.20 | 0.20 | 0.20 | 0.20 |
| Hg (μg/dscm) | 50 | 72 | 50 | 72 |
| PM (gr/dscf) | 0.030 | 0.030 | 0.030 | 0.030 |
| HCl/Cl2 (ppmv) | 630 | 120 | 67 | 120 |
| CO (ppmv) | 100 | 100 | 100 | 100 |
| HC (ppmv): | | | | |
| Main Stack [2] | 20 | 20 | 20 | 20 |
| By-Pass | 6.7 | 10 | 6.7 | 10 |
| SVM (μg/dscm) | 57 | 670 | 55 | 670 |
| LVM (μg/dscm) | 130 | 63 | 44 | 63 |

[1] All emission levels are corrected to 7% $O_2$.
[2] Not applicable to preheater and/or precalciner kilns.

1. *Subcategorization considerations.* After analyzing comments submitted by the Cement Kiln Recycling Coalition (CKRC) on the proposed rule, including information on the types of cement kilns that are currently burning hazardous waste, we considered whether the following subcategories would be appropriate: (1) Short kilns with separate by-pass and main stacks; (2) short kilns with a single stack that handles both by-pass and preheater or precalciner emissions; (3) long dry kilns that use kiln gas to dry raw meal in the raw mill; and (4) others (i.e., wet kilns, and long dry kilns not using raw mill drying). Each of the first three categories is comprised of only one cement kiln facility while the kilns at the remaining 19 facilities are in the fourth category: wet kilns or long dry kilns that do not use raw mill drying. We find that these subcategories should be considered because the unique design or operating features of these kilns could have a significant impact on emissions of one or more HAPs that the Agency proposed to regulate.

To determine whether special standards would be appropriate for any of the three unique cement kiln types, we identified floor control and emission levels considering data only for the other kilns (i.e., wet kilns, and long dry kilns not using raw mill drying). We then considered whether the unique kiln types could apply the those MACT controls and achieve those emission standards. It appears that these unique kilns can employ the MACT controls and achieve the corresponding emission levels identified in today's notice for the other kilns (i.e., wet kilns, and long dry kilns not using raw mill drying). Thus, subcategorization would not appear to be needed to determine achievable MACT floors for all cement kilns burning hazardous waste.

2. *Dioxins and Furans (D/F).* a. MACT Floor for Existing Sources. At proposal, the Agency identified floor control as ''temperature control at the inlet to the ESP or fabric filter at 418 °F''. The proposed floor emission level was ''0.20 ng TEQ/dscm, or temperature at the inlet to the ESP or fabric filter not to exceed 418 °F''.

Upon re-evaluation of the revised database, we have identified an alternative data analysis method that seems more appropriate to identify floor control and the floor emission level. Based on an engineering evaluation of these data and other available information, floor control would be ''temperature control at the inlet to the ESP or fabric filter at 400 °F''. This results in a floor emission level of ''0.20 ng TEQ/dscm, or 0.40 ng TEQ/dscm and temperature at the inlet to the ESP or fabric filter not to exceed 400 °F''.[33]

Temperature control to 400 °F or lower is appropriate for floor control because, from an engineering perspective, it is within the range of reasonable values that could have been selected considering that: (1) The optimum temperature window for surface-catalyzed D/F formation is 450–750 °F; and (2) below 350 °F, kiln gas can fall below the dew point which can increase corrosion in ESPs and fabric filters and reduce performance of the control devices. In addition, approximately 20 percent of the test conditions in our revised database reflect operations at temperatures of 400 °F or below. Thus, this temperature level is readily achievable.

To identify an emission level that temperature control ≤400 °F could achieve, it is appropriate to pool the available emissions data for hazardous waste burning kilns with data from nonwaste burning kilns.[34] This is because we are not aware of an engineering reason why hazardous waste burning would affect emissions of D/F. In fact, when the data sets are evaluated separately, the highest emitting HW cement kiln operating the ESP or fabric filter at temperatures ≤400 °F had D/F emissions of 0.28 ng TEQ/dscm. The highest emitting nonwaste cement kiln operating at those temperatures had D/F emissions of 0.37 ng TEQ/dscm. We believe that the difference in emission levels is simply a reflection of many design, operation, and maintenance factors on which we have little or no information, but which could affect D/F emission levels. An appropriate emission level associated with that operating temperature for all cement kilns would be 0.40 ng TEQ/dscm. Thus, the floor standard would be: ''0.20 ng TEQ/dscm, or 0.40 ng TEQ/dscm and temperature at the inlet to the ESP or fabric filter not to exceed 400 °F''.

b. BTF considerations for existing sources. The Agency proposed a BTF standard of 0.20 ng TEQ/dscm based on ACI operated at a temperature of ≤400

[33] The standard would be expressed in the form of a TEQ level combined with a maximum temperature at the PM control device. This form of the standard is consistent with the revised data and would result in somewhat lower emissions (i.e., because without the TEQ limit, some sources could exceed that TEQ level at the specified temperature). Thus, expressing the standard in this form better achieves the statutory mandate to establish standards that provide the maximum degree of reduction that is achievable in practice.

[34] We considered whether nonwaste cement kiln emission data should be pooled with HW cement kiln data for other HAPs and determined that emissions of other HAPs, except for PM, could be affected by hazardous waste burning. For example, hazardous waste can have higher levels of chlorine and metals such as Pb. With respect to PM, although it appears appropriate to pool the data sets, the better-suited data analysis method is based on the New Source Performance Standard, not an analysis of the emissions database. Thus, pooling of data would not affect the standard derived from that data analysis method. See discussion on the PM standard in the text.

°F. We continue to believe that this BTF standard is appropriate given the concerns the Agency has expressed about the risks posed by D/F emissions, and the Hg reductions that ACI would also provide. See 61 FR at 17392. Only sources emitting between 0.20 and 0.40 ng TEQ/dscm with temperature control alone would need to take further measures to reduce D/F levels to 0.20 ng under the BTF standard. Although these sources could achieve D/F emission levels well below 0.20 ng TEQ/dscm using ACI (i.e., ACI removal efficiency should be in the 95–99 percent range), a 0.20 ng TEQ/dscm appears still to be appropriate because it may allow some sources to meet the standard more cost-effectively by lowering gas temperatures at the ESP or fabric filter below 400 °F. Further, a BTF standard of 0.20 ng TEQ/dscm would likely avoid the need to provide further controls under RCRA authority.

c. MACT floor for new sources. At proposal, the Agency identified floor control for new sources as ''temperature control at the inlet to the ESP or fabric filter at 409 °F''. The proposed floor emission level was ''0.20 ng TEQ/dscm, or temperature at the inlet to the ESP or fabric filter not to exceed 409 °F''.

Upon evaluation of the revised database, the floor control and emission level discussed above for existing sources would also be appropriate for new sources (i.e., ''temperature control at the inlet to the ESP or fabric filter at 400 °F'' corresponding to an emission level of ''0.20 ng TEQ/dscm, or 0.40 ng TEQ/dscm and temperature at the inlet to the ESP or fabric filter not to exceed 400 °F''. This is because our engineering evaluation of available information and facility operating experience indicates that the best controlled source is one that is controlling temperature control at the inlet to the fabric filter at 400 °F.

d. BTF considerations for new sources. The Agency proposed ACI as BTF control and a BTF standard of 0.20 ng TEQ/dscm. We continue to believe that this BTF standard is appropriate for new sources for the same reasons discussed above in the context of existing sources.

3. *Mercury (Hg).* a. MACT floor for existing sources. At proposal, the Agency identified floor control as hazardous waste feedrate control not to exceed an MTEC of 110 μg/dscm. EPA proposed a floor standard of 130 μg/dscm.

All cement kilns employ either ESPs and fabric filters for PM control. However, since Hg is generally in the vapor form in and downstream of the combustion chamber, including the air pollution control device, ESPs and fabric filters do not achieve good mercury control. Mercury emissions from cement kilns are currently controlled by the BIF rule which establishes limits on the maximum feedrate of Hg in total feedstreams (e.g., hazardous waste, raw materials, coal). Thus, MACT is based on hazardous waste feed control.

Review of the revised database indicate that cement kilns only infrequently conducted Hg spiking of the hazardous wastes (contrary to the Agency's initial information), and thus the Hg content in the wastes during testing is likely representative of the Hg content during typical operations. The revised data also show that raw materials can represent a significant source Hg input to the kiln system. Since cement kilns do not employ a dedicated device capable of Hg control, the Agency believes that the Hg data are essentially ''normal'' even though generated during worst case compliance testing conditions for other parameters.

To evaluate these revised data for the purpose of determining a MACT floor, the Agency used the following data analysis steps: (1) Rank Hg emissions from lowest to highest; (2) conduct a breakpoint analysis on the ranked Hg emissions data, and (3) establish the floor standard as the test condition average of the breakpoint source. The breakpoint analysis reflects an engineering-based evaluation of the data and ensures that the few cement kilns spiking extra Hg do not drive the floor level to levels higher than the preponderance of this ''normal'' data indicates is routinely achievable. The Agency's analysis results in a MACT floor level of 72 μg/dscm. The revised database indicates that approximately 80 percent of cement kilns are achieving this floor level.

b. BTF considerations for existing sources. The Agency proposed a BTF standard of 50 μg/dscm based on flue gas temperature reduction to 400 °F or less followed by ACI. EPA continues to believe that ACI is an appropriate BTF technology for cement kilns. Although ACI is not employed for Hg control at any full-scale HW cement kiln, the Agency is not aware of any cement kiln flue gas conditions that would preclude the applicability of ACI—which has been demonstrated for other similar types of combustion applications. As discussed in the NPRM, EPA assumes that cement kilns employing ACI to meet a BTF standard would install the ACI system after the existing ESP or fabric filter, and then add on a new fabric filter to remove the injected carbon with the adsorbed Hg. Although adding a new fabric filter in series is an expensive approach, it will enable cement kilns to continue current cement kiln dust (CKD) recycling practices by avoiding potential internal build-up of Hg from CKD recycling.

In the NPRM, the cement kiln BTF standard was based on the assumption that an ACI system could routinely achieve Hg emissions reductions of 80 to 90 percent. The Agency received public comments from, among others, the cement manufacturing industry questioning whether a ACI application on a cement kiln could routinely achieve capture efficiencies as proposed. The commenters went on to say that removal efficiencies of approximately 60 percent were perhaps more realistic. We will address these comments specifically as part in the final rulemaking, but for the purposes of today's analysis, EPA has assumed an ACI effectiveness of 60 percent in identifying BTF levels for cement kilns. Thus, the BTF standard for cement kilns would be 30 μg/dscm based on an ACI efficiency of 60 percent applied to the potential floor level of 72 μg/dscm.

Ultimately adopting a BTF standard of 30 μg/dscm for cement kilns will likely involve close scrutiny of cost-effectiveness and other factors, including the costs of retrofits that sources will need to undertake (e.g., installing the ACI system, add-on of a new fabric filter, managing the captured carbon) relative to the emissions reductions achieved. Without pre-judging this issue, the Agency's experience to date suggests that the final analysis may well reveal significant drawbacks associated with the BTF level.

c. MACT floor for new sources. At proposal, the Agency identified floor control for new sources as hazardous waste feedrate control not to exceed an MTEC of 28 μg/dscm. EPA proposed a floor standard of 82 μg/dscm.

The Agency believes that the floor control and emission level discussed above for existing sources would also be appropriate for new sources. Thus, the MACT floor for new cement kilns would be 72 μg/dscm based on the revised database.

d. BTF considerations for new sources. At proposal, BTF for new sources was based on ACI and we proposed a BTF standard of 50 μg/dscm.

As discussed for existing sources, the Agency is considering the use of ACI and flue gas temperature reduction to 400 °F as the BTF technology. In evaluating the revised database, EPA has identified a level of 30 μg/dscm as the BTF standard for new sources based on ACI. This is based on a source achieving the MACT new floor level of

72 μg/dscm and then applying ACI with a 60 percent removal efficiency. For the same reasons identified for existing sources, the Agency is concerned about whether this BTF level based on ACI will ultimately prove to be cost-effective for new cement kiln sources.

4. *Particulate Matter (PM).* a. MACT floor for existing sources. At proposal, EPA defined floor control as a fabric filter with an air-to-cloth ratio of 2.3 acfm/ft$^2$. The floor analysis led to a level of 0.065 gr/dscf, but due to concerns with the appropriateness of using a statistically-derived variability factor, the Agency instead established the floor standard based on the cement kiln New Source Performance Standard (NSPS). The NSPS is a process emissions rate that converts to an approximate flue gas concentration of 0.03 gr/dscf.

Today, EPA is taking comment on two data analysis methods to identify the PM floor standard for cement kilns. The first data analysis method would be to establish the floor standard equivalent to the NSPS, which is 0.3 lbs PM per ton of dry raw material feed. Currently, approximately 20 percent of HW cement kilns are subject to the NSPS. Cement kilns achieve the NSPS with well-designed and properly operated ESPs or fabric filters.

A second data analysis method considered and potentially preferred would be to express the NSPS as a stack gas concentration limit as done in the NPRM. The conversion of the NSPS to a concentration standard will vary by kiln process type (e.g., wet, dry, preheater, preheater/precalciner) because the amount of flue gas generated per ton of raw material feed varies by process type. Based on typical factors of flue gas quantities generated per ton of raw material feed and flue gas moisture content, the NSPS equates to a PM concentration of approximately 0.03 gr/dscf for wet process kilns (also the least energy efficient) and 0.05 gr/dscf for preheater kilns (the most energy efficient). The total HW cement kiln universe is comprised of 41 kilns with varying process types: 27 wet, 12 long dry, one preheater/precalciner, and one preheater. Of the cement kilns currently subject to the NSPS standard, four are wet, two are long dry, one preheater/precalciner, and one preheater.

Notwithstanding that the concentration equivalent of the NSPS can vary by process type, establishing the floor standard for all cement kilns at 0.030 gr/dscf appears to be appropriate regardless of manufacturing process utilized, for the following reasons: (1) The majority (66 percent) of the cement kilns are wet process kilns for which the NSPS concentration equivalent is 0.030 gr/dscf. For these kilns, this floor method would not differ from the initial NSPS method used in the proposal. (2) Our database shows non-wet process kilns have at least one test condition (in addition to three quarters of all non-wet process kiln data) achieving 0.030 gr/dscf. Therefore, achievability of the floor appears to be satisfied. (3) Even though wet process kilns typically have lower inlet grain loadings than the non-wet processes, non-wet kilns are achieving the 0.030 gr/dscf level. Again, the achievability requirement is met. Thus, the Agency believes that it is appropriate to establish the MACT floor for existing sources at 0.030 gr/dscf.

In the NPRM, the Agency proposed that sources maintain continuous compliance with the PM standard through the use of a PM CEMS. A decision whether to require cement kilns to install a PM CEMS will be made at the completion of an on-going demonstration testing program to determine if at least one PM CEMS can meet the proposed performance specifications. Since the floor standards discussed above were based on manual test method data, the Agency will re-evaluate at the completion of the CEMS testing program whether these PM floor standards would be appropriate in the event that the final rulemaking requires continuous compliance with a PM CEMS. The Agency will make available the results and conclusions of the demonstration test program in the docket for the HWC rule.

b. BTF considerations for existing sources. In the NPRM, the Agency considered a BTF level of 0.015 gr/dscf based on improved PM control. However, we determined that such a standard would not likely be cost-effective. We did not have adequate data to ensure that, given the high inlet grain loading caused by entrained raw material, cement kilns could routinely achieve 0.015 gr/dscf and below with a single fabric filter or ESP.

In light of the revised database, the Agency again considered a BTF PM emissions level based on improved PM control. Because the floor level of 0.030 gr/dscf presented today is the same as the proposed floor, a BTF standard lower than 0.030 gr/dscf (even with corresponding BTF reductions for SVMs and LVMs) appears not to be cost-effective based on information developed at proposal.

c. MACT floor for new sources. At proposal, the Agency defined floor control as a fabric filter with an air-to-cloth ratio of less than 1.8 acfm/ft$^2$. The floor analysis lead to a level of 0.065 gr/dscf. Due to concerns with the appropriateness of the statistically-derived variability factor, the Agency instead established the floor standard based on the cement kiln NSPS. The NSPS is a process emissions rate that the Agency converted to an approximate flue gas concentration of 0.030 gr/dscf.

Upon evaluation of the revised database discussed for existing sources, EPA continues to believe that the floor standard discussed above for existing sources would also be appropriate for new sources. Therefore, MACT floor control is a well-designed and properly operated PM control device (e.g., fabric filter, ESP), and the MACT floor for new cement kilns would be 0.030 gr/dscf.

d. BTF considerations for new sources. In the NPRM, EPA considered a BTF standard based on improved PM control to be consistent with existing sources. However, we found that the BTF level would not be cost-effective.

Today, as discussed above for existing source BTF considerations and based upon examining the revised database in light of the findings at proposal, a BTF standard beyond a PM level of 0.030 gr/dscf (and corresponding BTF reductions for SVMs and LVMs) would not appear to be cost-effective.

5. *Semivolatile Metals (SVM) (cadmium and lead).* a. MACT Floor for Existing Sources. At proposal, EPA defined floor control as a fabric filter with an air-to-cloth ratio less than 2.1 acfm/ft$^2$ and a HW MTEC of 84,000 μg/dscm. The proposed floor level was 57 μg/dscm.

Cement kilns use a combination of good PM control and limiting hazardous waste feedrates to control SVM emissions. SVMs are controlled most efficiently by technologies, such as fabric filters, which are effective at capturing fine PM. EPA's database shows that SVM emissions vary substantially from 1 to over 6,000 μg/dscm.

The engineering evaluation and data analysis method used by EPA to evaluate and identify a MACT floor from the revised database is an extension of the PM floor analyses of the revised database. As discussed in the PM analysis, a floor of 0.030 gr/dscf could represent MACT based on good PM control. Since SVMs are controlled, in part, by a well-designed and operated PM control device, it follows that sources achieving this PM performance level should also be controlling SVM emissions at typical SVM feedrates. Therefore, in its refined SVM analysis of the revised database, EPA would first consider all SVM data when corresponding PM measurements are below 0.030 gr/dscf. To identify the SVM floor from these data, we would identify the floor at the level that

excludes (by breakpoint analysis) sources achieving substantially poorer SVM control than the majority of sources. As noted earlier in the case of HWIs, it is appropriate to exclude sources with significantly poorer SVM performance because their higher SVM emissions may be the result of exceedingly high SVM feedrates or some other factor that shows the test condition did not actually reflect MACT floor controls. The Agency does not have available information to otherwise screen out these non-MACT test conditions from the expanded universe for SVM.

The Agency's evaluation of the revised cement kiln SVMs data results in a MACT floor of approximately 670 µg/dscm. Approximately 85 percent of SVM test condition data are currently achieving this emissions level.

Finally, as discussed in an earlier section, a preliminary analysis indicates that MACT standards may not be warranted for one HAP metal, antimony. Since the number of metals being considered for MACT standards may change, we are investigating the appropriate structure of metals standards (e.g., retain the volatility groups or establish individual metals standards). Using the refined method discussed above for SVM, we analyzed the revised database with respect to Cd and Pb data. The floor analysis corresponding to PM measurements below 0.030 gr/dscf would result in the following floor levels: Cd 60 µg/dscm, and Pb 560 µg/dscm.

b. BTF considerations for existing sources. In the NPRM, the Agency considered a BTF standard for SVMs based on improved PM control below 0.030 gr/dscf. However, the Agency concluded that a BTF standard would not be cost-effective given that the SVM Floor level of 57 µg/dscm alone would result in an estimated 94 percent SVM reduction in emissions.

As discussed for PM BTF considerations, the Agency also re-evaluated the possible appropriateness of using a reduced PM emissions level based on improved PM control as a BTF standard (with corresponding BTF reductions in SVMs and LVMs). Even though the SVM floor standard is higher than at proposal, our preliminary judgment is that significant cost-effectiveness considerations will likely be encountered in a final analysis of whether to establish a BTF standard for either SVMs or for Pb or Cd individually.

If, however, the revised risk assessment yet to be conducted would show significant risk at a SVM floor standard of either 670 µg/dscm, the Agency will determine whether a BTF standard based on control of HW SVM feedrate to levels below those at the floor would be appropriate. This feedrate limitation would in turn reduce SVM emissions. The BTF standard and the corresponding level of feedrate control would be dictated by considerations of cost-effectiveness and the need to establish more stringent RCRA-related controls.

c. MACT floor for new sources. At proposal, the Agency defined floor control, based on the best performing source, as a fabric filter with an air-to-cloth ratio less than 2.1 acfm/ft$^2$ and a HW MTEC of 36,000 µg/dscm The proposed floor level for new cement kilns was 55 µg/dscm.

Upon evaluation of the revised database, EPA believes that the floor control and emission level discussed above for existing sources for SVMs would also be appropriate for new sources. In this event, MACT floor control would be a well-designed, operated and maintained PM control device (i.e., fabric filter or ESP) achieving the PM floor level of 0.030 gr/dscf. The Agency's evaluation of the revised SVM data results in a MACT floor of 670 µg/dscm.

Finally, based on the revised database, individual metal floor levels for new sources are identical to those for existing sources. Thus, individual Cd and Pb standards are: Cd 65 µg/dscm and Pb 550 µg/dscm.

d. BTF Considerations for new sources. In the NPRM, the Agency considered a SVM BTF level, but determined that a BTF standard would not be cost-effective.

As discussed for existing sources, the Agency considered a more stringent PM emissions level for improved control of PM, SVM and LVM emissions for new cement kilns in light of the revised database. Even though the SVM floor standard is higher than at proposal, our preliminary judgment is that significant cost-effectiveness considerations will likely be encountered in a final analysis of whether to establish a BTF standard for either SVMs or for Pb or Cd individually.

6. *Low Volatile Metals (LVM) (arsenic, beryllium, and chromium).* a. MACT floor for existing sources. At proposal, EPA defined floor control as either (1) a fabric filter with an air-to-cloth ratio less than 2.3 acfm/ft$^2$ and a HW MTEC of 140,000 µg/dscm, or (2) an ESP with a specific collection area of 350 ft$^2$/kacfm. The proposed floor level was 130 µg/dscm, which included antimony.

The engineering and data analysis method used by EPA to evaluate the revised database and identify a MACT floor for LVMs is also related directly to the PM floor analysis. As was determined in the PM analysis, a floor of 0.030 gr/dscf represents MACT for cement kilns based on good PM control. Considering all LVM data from sources achieving a PM level 0.030 gr/dscf or better, EPA's evaluation of the revised cement kiln data would result in a LVM floor of 63 µg/dscm (excluding sources above a breakpoint and therefore excluding those with substantially poorer LVM emissions than the majority of sources). Approximately 90 percent of cement kiln LVM test condition data are currently achieving this emissions level.

Finally, as discussed for SVMs, EPA is continuing to investigate the appropriate structure of metals standards (e.g., retain the volatility groups or establish individual metals standards). The Agency analyzed individual As, Be, and Cr (hexavalent) data and established individual metal floor levels consistent with the engineering evaluation and data analysis method. Where PM measurements are below 0.030 gr/dscf, the result would be: As 10 µg/dscm, Be 1.1µg/dscm, and Cr (hexavalent) 4.6 µg/dscm.

The Agency is concerned that some of the potential floor standards for some individual metals (e.g., Be, Cr (hexavalent)) may be present at levels approaching practical quantitation limits (PQLs). PQLs are the lowest level of quantification that the Agency believes a competent analytical laboratory can be expected to reliably achieve. The Agency will investigate whether this issue may need to be addressed in the development of any individual metals standards that may be considered for the final rulemaking. We invite comment on the issue of PQLs and LVM BTF standards.

b. BTF considerations for existing sources. In the NPRM, the Agency considered a BTF standard for LVMs based on improved PM control below 0.030 gr/dscf. However, the Agency concluded that a BTF LVM standard would not be cost-effective.

As discussed for PM, a reduced PM emissions level based on improved PM control could be considered in evaluating a potential BTF standard (taking into consideration corresponding BTF reductions in LVMs and SVMs) for existing CKs. Because both the PM and LVM floor levels presented today would be similar to the proposed floor, a BTF standard for either LVMs or individual As, Be, and Cr (hexavalent) standards based on improved PM control would likely raise

significant cost-effectiveness concerns and may not ultimately be appropriate.

c. MACT floor for new sources. At proposal, the Agency defined floor control, based on the best performing source, as a fabric filter with an air-to-cloth ratio less than 2.3 acfm/ft$^2$ and a HW MTEC of 25,000 µg/dscm. The proposed LVM floor level for new CKs was 44 µg/dscm.

Based upon our re-evaluation of the database, the floor control and emission level discussed above for existing sources for LVMs would also appear to be appropriate for new sources. MACT floor control is a well-designed and properly operated PM control device (i.e., fabric filter, ESP) achieving the PM floor level of 0.030 gr/dscf. The Agency's evaluation of the LVM data results in a MACT floor of 63 µg/dscm.

Finally, individual metal floor levels for new sources are identical to those for existing sources. Thus, the standards would be: As 10 µg/dscm, Be 1.1 µg/dscm, and Cr (hexavalent) 4.6 µg/dscm.

d. BTF considerations for new sources. In the NPRM, the Agency considered a LVM BTF level, but determined that a BTF standard would not be cost-effective.

As discussed for existing sources, the Agency considered a more stringent PM emissions level for improved control of PM, SVM and LVM emissions for new CKs. Because both the alternative PM and LVM floor levels presented today are lower than the proposed floors, a BTF standard for either LVMs or individual As, Be, or Cr (hexavalent) standards based on improved PM control may be inappropriate in light of the cost-effectiveness concerns inherent in this scenario.

7. *Hydrochloric Acid and Chlorine ($HCl/Cl_2$)*. a. MACT floor for existing sources. At proposal, the Agency identified floor control for total chlorine (i.e., $HCl + Cl_2$) as feedrate control of chlorine in the hazardous waste at an MTEC not to exceed 1.6 g/dscm, and proposed a floor standard of 630 ppmv. When we evaluated the revised database prior to today's notice, we used a data analysis method similar to that used at proposal. The floor control would be defined the same way as proposed, but the floor standard would be 120 ppmv. This standard should be readily achievable given that 93 percent of the test conditions in the revised database are meeting that level.

We used the following data analysis steps for both the proposed standard and today's alternative standard: (1) Rank emissions from lowest to highest; (2) define as floor control the highest hazardous waste chlorine MTEC for the 6 percent of sources [35] with the lowest emissions; and (3) define as the floor standard the highest test condition average emissions of any test condition operated at or below the floor MTEC (i.e., the expanded universe). We then refined the data analysis method in two respects based on an engineering evaluation of the revised database: (1) We did not add a computed emissions variability factor [36]; and (2) several test conditions were deleted from the expanded universe where an engineering evaluation revealed that SREs were significantly worse than the majority of other SREs.

In the case of total chlorine emissions for CKs, it appears not to be appropriate to use a breakpoint analysis to screen from the expanded universe sources that are not achieving an appropriate removal efficiency. This is because total chlorine is removed incidentally by reactions with the alkaline raw materials (e.g., limestone). Thus, it is difficult to reason that poor SRE is caused by poor design, operation, or maintenance of the control system. Nonetheless, we believe it is still appropriate to screen out clearly anomalous SREs because they are likely indicative of an incorrect MTEC value or emission measurement. An incorrect value for either could affect the floor standard.[37]

b. BTF considerations for existing sources. At proposal, the Agency defined BTF control as wet scrubbing with a 99 percent removal efficiency, but determined that a BTF standard would not be cost-effective. Given that the alternative floor level presented today would be substantially lower than the proposed floor, a BTF standard would be less cost-effective. Thus, we believe that our final analysis is likely to conclude that a BTF standard would not be warranted.

c. MACT floor for new sources. At proposal, the Agency defined floor control for new sources as hazardous waste feedrate control for chlorine at an MTEC of 1.6 g/dscm or less. The proposed floor standard was 630 ppmv, the same as the floor standard for existing sources.

Given that the alternative data analysis method discussed above for existing sources did not change the expanded universe, except to screen out test conditions with anomalous SREs, MACT floor control and the floor emission level would be the same as for existing sources: hazardous waste feedrate control for chlorine at an MTEC of 1.6 g/dscm or less, resulting in a floor standard of 120 ppmv (i.e., after screening out test conditions with anomalous SREs).

d. BTF considerations for new sources. The Agency proposed a BTF standard for new sources of 67 ppmv based on wet scrubbing. Given that under the revised data analysis method discussed today the floor standard would be much lower than proposed, the Agency believes that the economic impact analysis being conducted in support of the final rule is likely to raise significant concerns about cost-effectiveness. In that event, the Agency would promulgate the 120 ppmv floor standard for new sources.

8. *Carbon Monoxide* (CO). The Agency proposed the same MACT floor standards for CO for existing and new CKs, and determined that BTF controls would not be cost-effective. Floor control was defined for kilns with by-pass ducts as operation under good combustion practices and the standard was 100 ppmv, HRA, measured in the by-pass duct. For kilns without a by-pass duct (i.e., long wet and dry kilns), no CO standard was proposed given that CO levels in the main stack would not be an indicator of combustion efficiency. This is because CO can be generated by process chemistry (i.e., dissociation of $CO_2$ to form CO) and evolution from trace organics in the raw material feedstocks, as well as from combustion of fuels.

The Agency continues to believe that the proposed CO standard for kilns equipped with a by-pass duct would be appropriate. However, under one option being considered for limiting CO (and HC) emissions, kilns without a by-pass duct would also be required to comply with a CO limit based on the level achieved during the performance test demonstrating compliance with the HC limit. See discussion in Part Two, Section II.C.

Finally, the Agency continues to believe that a BTF standard for CO based on better combustion practices is likely to raise significant cost-effectiveness considerations.

9. *Hydrocarbons* (HC). The Agency proposed the same MACT floor standards for HC for existing and new CKs, and determined that BTF controls would not be cost-effective. Floor

[35] Or where we had data from fewer than 30 sources, the three sources with the lowest emissions (i.e., 3 represents the median of the five best performing sources).

[36] See previous discussion in the text. As we discussed at proposal (61 FR at 17396), the computed variability factor for this standard resulted in a standard that did not comport with engineering information on the APCDs at issue, engineering experience on facility performance within this source category, or the emissions database.

[37] The floor standard without screening the anomalous SREs would have been 160 ppmv.

control was defined for kilns with by-pass ducts as operation under good combustion practices and the standard was 6.7 ppmv, based on an hourly rolling average (HRA and measured in the by-pass duct. For kilns without a by-pass duct (i.e., long wet and dry kilns), floor control was defined as good combustion practices and use of raw materials with relatively low organic content, and the standard was 20 ppmv, HRA, measured in the main stack.

In evaluating the revised database for today's notice, the 20 ppmv standard still appears to be appropriate for the main stack of long kilns [38]. When considering by-pass kilns, however, the revised database still lacks HC emissions data for the only two CKs currently burning hazardous waste in units equipped with by-pass ducts. These two sources are complying with the BIF rules by documenting that CO levels are below 100 ppmv, HRA. [39] Under one attractive option for compliance with the CO and HC standards (i.e., sources would have the option of complying with either the CO or HC standard; see discussion in Part Two, Section II.C), we would expect that these two sources would continue to comply with the CO limit. Thus, it may not be necessary to establish a HC limit for them. However, given that it may be prudent to establish a HC limit for these by-pass kilns, we would transfer the good combustion practices-based HC standard for incinerators—10 ppmv, HRA—to these kilns. This is appropriate because: (1) Good combustion practices is floor control for CO and HC for these kilns as well as for incinerators; and (2) given that the good combustion practices-based CO standard is the same for incinerators and by-pass kilns, the good combustion practices-based HC standard should also be the same.

As discussed at proposal, the Agency continues to be concerned about cost-effectiveness considerations related to BTF controls for HC based on operating under better combustion practices.

G. Re-Evaluation of Proposed MACT Standards for Lightweight Aggregate Kilns

We discuss in this section the basis for the revised standards for LWAKs that could result from applying various engineering evaluation and data analysis methods to the revised emissions database [40]. A comparison of the proposed and potentially revised standards for existing and new sources is presented in the table below:

TABLE II.G:—REVISED STANDARDS FOR EXISTING AND NEW LWAKS [1]

| HAP or HAP surrogate | Existing sources | | New sources | |
|---|---|---|---|---|
| | Proposed standard | Revised standard | Proposed standard | Revised standard |
| D/F (ng TEQ/dscm) | 0.20 | 0.20 | 0.20 | 0.20 |
| Hg (μg/dscm) | 72 | 47 | 72 | 47 |
| PM (gr/dscf) | 0.030 | 0.022 | 0.030 | 0.022 |
| HCl/Cl2 (ppmv) | 450 | 130 | 62 | 43 |
| CO (ppmv) | 100 | 100 | 100 | 100 |
| HC (ppmv) | 14 | 10 | 14 | 10 |
| SVM (μg/dscm) | 12 | 76 | 5.2 | 76 |
| LVM (μg/dscm) | 340 | 37 | 55 | 37 |

[1] All emission levels are corrected to 7% $O_2$.

1. *Dioxins and Furans* (D/F). a. MACT floor for existing sources. At proposal, the Agency had D/F emissions for only one LWAK and therefore pooled that LWAK data point with D/F data for CKs to identify MACT standards. Consequently, floor control and the floor emission level for LWAKs were the same as for CKs. The proposed floor control was ''temperature control at the inlet to the fabric filter [41] at 418 °F'', and the proposed floor emission level was ''0.20 ng TEQ/dscm, or temperature at the inlet to the fabric filter not to exceed 418 °F''. The Agency reasoned that pooling D/F data for LWAKs and CKs could be appropriate because both types of devices are designed and operated similarly with respect to factors that can affect surface-catalyzed D/F formation. Both LWAKs and CKs have high PM inlet loadings comprised primarily of entrained raw material and both are equipped with fabric filters that operate within the same temperature range.

Commenters on the proposed rule, however, argued that pooling LWAK and CK D/F data was inappropriate for purposes of establishing MACT standards for LWAKs. Since proposal, the Agency has obtained D/F emissions data from two additional LWAK facilities. These data are included in the revised emissions database and are used to identify the alternative standards presented here.

Based upon evaluation of the revised LWAK D/F database, our engineering evaluation of the data and other information on LWAK performance suggests the floor control can be specified as ''temperature control at the inlet to the fabric filter at 400 °F''. This would result in a floor emission level of ''0.20 ng TEQ/dscm, or 4.1 ng TEQ/dscm and temperature at the inlet to the fabric filter not to exceed 400 °F'.[42] Given that the entire revised database also comprises the expanded universe (all sources using floor control) the highest single run for the test condition

[38] The Agency did not propose a HC standard for the main stack of a preheater or preheater/precalciner kiln. See FR at 17397–8. The Agency is currently developing MACT standards for non-waste burning cement kilns, however. Any standards that the Agency may propose that are applicable to the main stack of a preheater or preheater/precalciner non-waste burning kiln may also be appropriate for the main stack of such hazardous waste burning kilns.

[39] The two kilns operating with by-pass ducts are Medusa's facility in Demopolis, AL, and Lone Star's facility in Cape Girardeau, MO. We note that Holnam has a long wet kiln in Clarksville, MO that has been retrofitted with a mid-kiln sampling port for purposes of monitoring CO in compliance with the BIF rule. That monitoring approach would be acceptable under the MACT rule as well.

[40] Additional details of the engineering and data analysis evaluations performed on the revised emissions database can be found in the Agency's background document: USEPA, ''Draft Technical Support Document for HWC MACT Standards (NODA), Volume I: MACT Evaluations Based on Revised Database'', April 1997.

[41] All LWAKs currently burning hazardous waste are equipped with fabric filters.

[42] The standard would be expressed in the form of a TEQ level combined with a maximum temperature at the PM control device. This form of the standard is consistent with the revised data and would result in somewhat lower emissions (i.e., because without the TEQ limit, some sources could exceed that TEQ level at the specified temperature). Thus, expressing the standard in this form better achieves the statutory mandate to establish standards that provide the maximum degree of reduction that is achievable in practice.

with the highest run average would be a reasonable floor level from an engineering perspective. (Note that if this were a large data set, the floor level could be identified simply as the highest test condition average.) This floor level is more than 40 percent higher than the highest test condition average (because of substantial variability among the runs for that test condition), and thus appears to be a level that LWAKs should be able to meet routinely using floor control.

As discussed for CKs, temperature control to 400 °F or less is appropriate for floor control because, from an engineering perspective, it is within the range of reasonable values that could have been selected considering that: (1) The optimum temperature window for surface-catalyzed D/F formation is 450–750 °F; and (2) below 350 °F, kiln gas can fall below the dew point which can increase corrosion in fabric filters and reduce performance of the control device. In addition, more than three LWAKs in the revised database were operated at temperatures of 400 °F or less (even though we do not have D/F emissions data for them). Thus, this temperature level appears to be readily achievable.

Although only two of the three LWAKs for which we have D/F emissions data operated the fabric filter at 400 °F or lower (the third operated at 417 °F), we have fabric filter operating data for other LWAKs when performing emissions testing for other HAPs that document fabric filter operations at 400 °F or lower. The LWAK whose fabric filter was operated at 417 °F had lower D/F emissions than a kiln whose fabric filter was operated at 400 °F. Thus, even though our engineering evaluation did not explicitly include the LWAK whose fabric filter operated at 417 °F, defining MACT floor control as ''temperature control at the inlet to the fabric filter at 400 °F'' did not result in a lower MACT floor emission level (i.e., lower than 4.1 ng TEQ/dscm). Rather, doing so ensures that LWAKs will be operating at floor levels consistent with sound operational practices for controlling D/F.

b. BTF considerations for existing sources. The Agency proposed a BTF standard of 0.20 ng TEQ/dscm based on ACI operated at a temperature of ≤400 °F.

Upon evaluation of the revised LWAK D/F database, LWAKs appear to be able to achieve a 0.20 ng TEQ/dscm standard simply by rapidly quenching combustion gases at the exit of the kiln to ≤400 °F, and insulating the duct-work leading to the fabric filter to maintain gas temperatures and avoid dew point problems. Although the data are not conclusive, and further testing is warranted to confirm this approach, our engineering evaluation of all available information indicates that this approach should be feasible.[43] If this approach proves to be less effective than anticipated, then ACI can be used to achieve the BTF standard.

We continue to believe that this BTF standard is appropriate given the concerns the Agency has expressed about the risks posed by D/F emissions. See discussion regarding a D/F BTF standard for CKs at 61 FR 17392. Further, a BTF standard of 0.20 ng TEQ/dscm would preclude the need to provide further controls under RCRA authority.

c. MACT floor for new sources. At proposal, the BTF considerations for new LWAKs were the same as for new CKs, and the proposed standards were the same.

Upon evaluation of the revised LWAK D/F database, the floor control and emission level discussed above for existing sources would also appear to be appropriate for new sources (i.e., ''temperature control at the inlet to the fabric filter at 400 °F'' corresponding to an emission level of ''0.20 ng TEQ/dscm, or 4.1 ng TEQ/dscm and temperature at the inlet to the fabric filter not to exceed 400 °F''. Our engineering evaluation indicates that the best controlled source is one that is controlling temperature control at the inlet to the fabric filter at 400 °F.

d. BTF considerations for new sources. The Agency proposed ACI as BTF control and a BTF standard of 0.20 ng TEQ/dscm. We continue to believe that this BTF standard is appropriate for new sources for the same reasons discussed above in the context of existing sources. Note that BTF control, as for existing sources, would be defined as rapid quench of kiln gas to ≤400 °F combined with duct insulation, as required, or ACI operated at ≤400 °F.

2. *Mercury* (Hg) a. MACT Floor for existing sources. At proposal, the Agency identified floor control as hazardous waste feedrate control not to exceed an MTEC of 17 μg/dscm. EPA proposed a floor standard of 72 μg/dscm.

All LWAKs employ fabric filters and one source uses a fabric filter and venturi scrubber to control mercury. However, since Hg is generally in the vapor form in and downstream of the combustion chamber, including the air pollution control device, fabric filters alone do not achieve good mercury control. Mercury emissions from LWAKs are currently controlled under the BIF rule, which establishes limits on the maximum feedrate of Hg in total feedstreams (e.g., hazardous waste, raw materials). Thus, MACT is based on hazardous waste feed control.

Review of the updated Hg data in the revised database indicate that LWAKs did not conduct Hg spiking of the hazardous wastes with the exception of one facility, and thus the Hg content in the wastes during testing is likely representative of typical operations. The data from this testing also show that raw materials can represent a significant source Hg input to the kiln system. Since the best performing sources, measured by Hg emissions, do not employ a dedicated device capable of Hg control, the Agency believes that the Hg data are essentially ''normal'' even though generated during worst case compliance testing conditions for other parameters.

To evaluate these revised data for the purpose of determining a MACT floor, the Agency used the following data analysis steps: (1) Rank Hg emissions from lowest to highest; (2) conduct a breakpoint analysis on the ranked Hg emissions data, and (3) establish the floor standard equal to the test condition average of the breakpoint source. The breakpoint analysis reflects an engineering evaluation of the data and ensures that the one source that spiked elevated quantities of Hg did not drive the floor level upward to levels higher than the preponderance of this ''normal'' data indicates is routinely achievable. The Agency's analysis results in a MACT floor level of 47 μg/dscm. The revised database indicates that approximately 75 percent of LWAKs are achieving this floor level.

b. BTF considerations for existing sources. The Agency originally considered a BTF standard based on flue gas temperature reduction to 400 °F or less followed by ACI, but determined that a BTF level would not be warranted.

EPA continues to believe that flue gas temperature reduction to 400 °F followed by ACI is the appropriate BTF control option for improved Hg control at LWAKs. As discussed above for existing CKs, we have assumed an ACI effectiveness of 60 percent in identifying BTF levels for LWAKs for the purposes of today's analysis. Thus, the BTF standard is 15 μg/dscm which is based on a ACI efficiency of 60 percent applied to the floor level of 33 μg/dscm. Going to a BTF standard of 15 μg/dscm for mercury is consistent with the range examined in the proposal.

[43] See USEPA, ''Draft Technical Support Document for HWC MACT Standards (NODA), Volume I: MACT Evaluations Based on Revised Database'', April 1997.

However, at proposal, significant cost-effectiveness issues were raised (and commented extensively on). It is likely that those same issues would arise here with respect to a BTF standard of 15 μg/dscm.

c. MACT floor for new sources. At proposal, the Agency identified floor control as hazardous waste feedrate control not to exceed an MTEC of 17 μg/dscm—the same as existing sources. Thus, EPA proposed an identical floor standard of 72 μg/dscm.

For the same reasons discussed for existing LWAKs, the Agency believes that the most appropriate engineering evaluation and data analysis method to identify the floor level is identical to the analysis done for existing sources. Thus, the MACT Floor standard would be 47 μg/dscm for new LWAKs.

d. BTF considerations for new sources. The Agency considered a BTF standard for new sources based on ACI, but determined that it would not be cost-effective to adopt the BTF standard. The Agency continues to consider the use of ACI as the BTF technology. In evaluating the revised database, EPA has identified a level of 15 μg/dscm as the BTF standard for new sources based on ACI and flue gas temperature reduction to 400 °F or less. This is based on a source achieving the MACT new floor level of 33 μg/dscm and then applying ACI with a 60 percent removal efficiency. Again, in light of the reasons identified for existing sources, the Agency has concerns as to whether a BTF level based on ACI will ultimately be warranted for new LWAK sources.

3. *Particulate Matter* (PM). a. MACT Floor for Existing Sources. At proposal, EPA defined floor control as a fabric filter with an air-to-cloth ratio of 2.8 acfm/ft$^2$. The MACT floor was 0.049 gr/dscf.

In evaluating the revised database, we examined a refined engineering evaluation and data analysis method to identify a MACT floor. This evaluation was a four-step process: (1) Rank all PM emissions data and identify the MACT floor controls used by the best performing 6 percent of sources. (2) Develop the expanded universe to include all sources employing MACT control, without further characterizing MACT control (e.g., air-to-cloth ratio of the fabric filter) as done in the proposal because we do not have sufficient data on the detailed design, operating, and maintenance characteristics related to test conditions in the revised database. Since all LWAKs use fabric filters for PM control, all test condition data are included in the expanded universe. (3) For each PM test condition, evaluate the corresponding SVM SRE and screen out sources that have relatively poor SREs (i.e., outliers above a breakpoint in the data array), which is an indicator of poor design, operation, and maintenance characteristics of the MACT controls at the source. (4) Identify the MACT floor equal to the highest test condition average of all test conditions in the PM expanded universe.

The Agency's evaluation of the LWAK PM data results in a MACT floor of 0.022 gr/dscf. All LWAK test condition data are achieving 0.022 gr/dscf.

LWAKs typically operate at higher stack oxygen concentrations compared to other combustion systems due to the LWAK manufacturing process (e.g., excess air is forced into the kiln to aid in the expansion of the raw material into lightweight aggregate). Typical stack oxygen concentrations range from 12 to 16 percent, while CKs, for example, typically range from 3 to 8 percent. Since the standards are expressed at 7 percent oxygen, the floor standard of 0.022 gr/dscf would be equivalent to 0.014 gr/dscf at 12 percent oxygen and 0.008 gr/dscf at 16 percent oxygen under the conditions that LWAKs typically operate.

In the NPRM, the Agency proposed that sources maintain continuous compliance with the PM standard through the use of a PM CEMS. A decision whether to require LWAKs to install a PM CEMS will be made at the completion of an on-going demonstration testing program to determine if at least one PM CEMS can meet the proposed performance specifications. Since the floor standard discussed above was based on manual test method data, the Agency will re-evaluate at the completion of the CEMS testing program whether these PM floor standards would be appropriate in the event that the final rulemaking requires continuous compliance with a PM CEMS. The Agency will notice the results and conclusions of the demonstration test program in the docket for the HWC rule.

b. BTF considerations for existing sources. In the NPRM, the Agency proposed a BTF level of 0.030 gr/dscf and solicited comment on an alternative BTF level of 0.015 gr/dscf based on improved PM control.

Based on the revised database, we can evaluate a reduced PM emissions level lower than 0.022 gr/dscf as the BTF standard (in conjunction with BTF reductions in SVMs and LVMs). This would require an improved PM collection technology such as the use of more expensive fabric filter bag material. Given that the alternative floor level analysis presented today would be substantially lower than the proposed floor and BTF levels, significant cost-effectiveness considerations come into play and suggest that BTF levels may not ultimately prove to be warranted.

c. MACT floor for new sources. At proposal, EPA defined floor control for new sources as a fabric filter with an air-to-cloth ratio of 1.5 acfm/ft$^2$. The MACT floor was 0.054 gr/dscf.

Based upon evaluation of the revised database, the floor control and emission level discussed above for existing sources would also appear to be appropriate for new sources. Therefore, MACT floor control is a well-designed and properly operated fabric filter, and the MACT floor for new LWAKs is 0.022 gr/dscf.

d. BTF considerations for new sources. In the NPRM, EPA proposed a BTF standard of 0.030 gr/dscf based on improved PM control, which was consistent with existing sources.

Today, as discussed above for existing source BTF considerations and based upon examining the revised database in light of the findings at proposal, a BTF standard for new sources beyond 0.022 gr/dscf (and corresponding BTF reductions for SVMs and LVMs) would not appear to be cost-effective.

4. *Semivolatile Metals (SVM) (cadmium and lead).* a. MACT floor for existing sources. At proposal, EPA defined floor control as either (1) a fabric filter with an air-to-cloth ratio of 1.5 acfm/ft$^2$ with a hazardous waste (HW) MTEC less than 270,000 μg/dscm, or (2) a combination of a fabric filter and venturi scrubber with an air-to-cloth ratio of 4.2 acfm/ft$^2$ and a HW MTEC less than 54,000 μg/dscm. The proposed floor level was 12 μg/dscm.

LWAKs use a combination of good PM control and limiting hazardous waste feedrates to control SVM emissions. SVMs are controlled most efficiently by technologies which are effective at capturing fine PM, such as fabric filters which are employed by all LWAKs. EPA's revised database shows that SVM emissions vary substantially from 3 to over 1600 μg/dscm with 60 percent below 80 μg/dscm and the remaining 40 percent above 400μg/dscm.

The refined data analysis method used by EPA to evaluate and identify a MACT floor would be based directly on the results from the PM floor analyses discussed above. As mentioned there, 0.022 gr/dscf would appear to represent the MACT floor for LWAKs based on good PM control. Since SVMs are controlled, in part, by a well-designed and operated PM control devices, it follows that sources achieving this PM

performance level should also be controlling SVMs emissions.

Therefore, in its refined SVM analyses of the revised database, the Agency would first consider all SVM data when corresponding PM measurements are below 0.022 gr/dscf. To identify the SVM floor from these data, we identify either at the highest SVM test condition average or the level that excludes sources achieving substantially poorer SVM control than the majority of sources. It is most likely appropriate to use the latter approach—excluding sources with significantly poorer SVM performance—because their higher SVM emissions may be the result of exceedingly high SVM feedrates or some other factor which is not able to be discerned from the data available to the Agency. An SVM emissions breakpoint analysis is the approach for excluding these poorer performing test conditions.

Applying this evaluation technique to the revised LWAK SVM database results in a MACT floor of 76 μg/dscm. Approximately 62 percent of LWAK SVM test condition data are currently achieving this emissions level.

Finally, as discussed in an earlier section, a preliminary analysis indicates that MACT standards may not be warranted for one HAP metal, antimony. Since the number of metals being considered for MACT standards may change, we are investigating the appropriate structure of metals standards (e.g., retain the volatility groups or establish individual metals standards). Using the refined method discussed above for SVM, we analyzed the revised database with respect to Cd and Pb data. The floor analysis corresponding to PM measurements below 0.022 gr/dscf would result in the following floor levels: Cd 53 μg/dscm, and Pb 67 μg/dscm.

b. BTF considerations for existing sources. In the NPRM, the Agency considered a BTF standard for SVMs based on improved PM control. However, the Agency concluded that a BTF standard would not be cost-effective given that the SVM floor level of 12 μg/dscm alone would result in an estimated 97 percent SVM reduction in emissions.

As discussed for PM BTF considerations, the Agency also re-evaluated the possible appropriateness of using a reduced PM emissions level based on improved PM control as a BTF standard (with corresponding BTF reductions in SVMs and LVMs). Even though the alternative SVM floor standard is higher than at proposal, our preliminary judgement is that significant cost-effectiveness considerations will be nonetheless encountered in a final analysis of whether to establish a BTF standard for SVMs or for Pb or Cd individually.

If, however, the revised risk assessment yet to be conducted would show significant risk at a SVM floor standard of 76 μg/dscm, which would be the floor level resulting from application of the data analysis method discussed above, the Agency will determine whether a BTF standard based on control of SVM feedrate to levels below those at the floor would be appropriate. This feedrate limitation would in turn reduce SVM emissions. The BTF standard and the corresponding level of feedrate control would be dictated by considerations of cost-effectiveness and the need to establish more stringent RCRA-related controls.

c. MACT floor for new sources. At proposal, EPA defined floor control as a fabric filter with an air-to-cloth ratio of 1.5 acfm/ft$^2$ with a hazardous waste (HW) MTEC less than 270,000 μg/dscm. The proposed floor level was 5.2 μg/dscm.

Upon evaluation of the revised database, EPA believes that the floor control and emission level discussed above for existing sources for SVMs would also be appropriate for new sources. In this event, MACT floor control would be a well-designed, operated and maintained PM control device (e.g., fabric filter) achieving the PM floor level of 0.022 gr/dscf. The Agency's evaluation of the SVM data results in a MACT floor of 76 μg/dscm.

Finally, based on the revised database, individual metal floor levels for new sources are identical to those for existing sources. Thus, individual Cd and Pb standards are 53 μg/dscm for Cd and 67 μg/dscm for Pb.

d. BTF considerations for new sources. In the NPRM, the Agency considered a SVM BTF level, but determined that a BTF standard would not be cost-effective.

As discussed for existing sources, the Agency considered a more stringent PM emissions level for improved control of PM, SVM and LVM emissions for new LWAKs in light of the revised database. Even though the SVM floor standard is higher than at proposal, as discussed above, cost-effectiveness issues are again raised and suggest that a BTF standard for either SVMs or for Pb or Cd individually based on improved PM control may likewise ultimately prove to be inappropriate.

5. *Low Volatile Metals (LVM) (arsenic, beryllium, and chromium)* a. MACT Floor for Existing Sources. At proposal, EPA defined floor control as a fabric filter with an air-to-cloth ratio of 1.8 acfm/ft$^2$ with a HW MTEC less than 46,000 μg/dscm.

The proposed floor level was 340 μg/dscm, which included antimony.

LWAKs use a combination of good PM control and limiting hazardous waste feedrates to control LVM emissions. LVMs are less likely to vaporize at combustion temperatures and therefore partition primarily to the residue or adsorb onto particles in the combustion gas. EPA's database shows that LVM emissions vary from around 20 to 285 μg/dscm.

The engineering evaluation data analysis method used by EPA to evaluate the revised database and identify a MACT floor for LVMs is also related directly to the PM floor analysis. As was determined in the PM analysis, a floor of 0.022 gr/dscf represents MACT for LWAKs based on good PM control. Considering all LVM data from sources achieving a PM level 0.022 gr/dscf or better, EPA's evaluation of the revised LWAK data results in a LVM floor of 37 μg/dscm (excluding sources above a breakpoint and therefore achieving substantially poorer LVM emissions than the majority of sources). Approximately 71 percent of LWAK LVM test condition data are currently achieving this emissions level.

Finally, as discussed for SVMs, EPA is continuing to investigate the appropriate structure of metals standards (e.g., retain the volatility groups or establish individual metals standards). The Agency analyzed individual As, Be, and Cr (hexavalent) data and established individual metal floor levels consistent with the engineering evaluation and data analysis method. Where PM measurements are below 0.022 gr/dscf, the result would be: As 22 μg/dscm, Be 3 μg/dscm, and Cr (hexavalent) 6.2 μg/dscm.

The Agency is concerned that some of the potential floor standards for some individual metals (e.g., Be, Cr (hexavalent)) may be present at levels approaching practical quantitation limits (PQLs). PQLs are the lowest level of quantification that the Agency believes a competent analytical laboratory can be expected to reliably achieve. The Agency will investigate whether this issue may need to be addressed in the development of any individual metals standards that may be considered for the final rulemaking. We invite comment on the issue of PQLs and LVM BTF standards.

b. BTF considerations for existing sources. In the NPRM, the Agency considered a BTF standard for LVMs based on improved PM control. However, the Agency concluded that a

BTF standard would not be cost-effective.

As discussed for PM BTF considerations, the Agency also re-evaluated the possible appropriateness of using a reduced PM emissions level based on improved PM control as a BTF standard (with corresponding BTF reductions in SVMs and LVMs). Considering that the alternative LVM floor standard would be lower than at proposal, our preliminary judgment is that significant cost-effectiveness considerations will likely be encountered in a final analysis of whether to establish a BTF standard for either LVM or for As, Be, or Cr (hexavalent) individually.

c. MACT floor for new sources. At proposal, EPA defined floor control as a fabric filter with an air-to-cloth ratio of 1.3 acfm/ft$^2$ with a hazardous waste (HW) MTEC less than 37,000 µg/dscm. The proposed floor level was 55 µg/dscm.

Based upon our re-evaluation of the database, the floor control and emission level discussed above for existing sources for LVMs would also appear to be appropriate for new sources. MACT floor control is a well-designed and properly operated PM control device (i.e., fabric filter) achieving the PM floor level of 0.022 gr/dscf. The Agency's evaluation of the LVM data would result in a MACT floor of 37 µg/dscm.

Finally, individual metal floor levels for new sources are identical to those for existing sources. Thus, the standards would be: As 22 µg/dscm, Be 3 µg/dscm, and Cr (hexavalent) 6.2 µg/dscm.

d. BTF considerations for new sources. In the NPRM, the Agency considered a LVM BTF level, but determined that a BTF standard would not be cost-effective.

As discussed for existing sources, the Agency considered a more stringent PM emissions level for improved control of PM, SVM and LVM emissions for new LWAKs. Because the alternative PM and LVM floor levels presented today are lower and approximately equivalent, respectively, than the proposed floors, a BTF standard for either LVMs or individual As, Be, or Cr (hexavalent) standards based on improved PM control may be inappropriate in light of the cost-effectiveness concerns inherent in this scenario.

6. *Hydrochloric Acid and Chlorine ($HCl/Cl_2$)* a. MACT floor for existing sources. At proposal, the Agency identified floor control for total chlorine as either: (1) Hazardous waste feedrate control of chlorine to a MTEC of 1.5 g/dscm or less; or (2) venturi scrubber with hazardous waste MTEC of 14 g/dscm or less. The proposed floor emission level was 2100 ppmv.

Upon evaluation of the revised database, the data analysis method used at proposal appears still to be appropriate and, consequently, floor control would be defined virtually the same as at proposal. However, EPA no longer thinks it appropriate to add a computed emissions variability factor to the standard-setting test condition for large data sets[44]. Thus, the floor emission level would be 1300 ppmv rather than 2100 ppmv.

b. BTF considerations for existing sources. At proposal, the Agency defined BTF control as wet or dry lime scrubbing with a control efficiency of 90 percent and proposed a BTF standard of 450 ppmv.

The Agency continues to believe that wet or dry lime scrubbing can achieve at least 90 percent removal of HCl/Cl2. Therefore, the revised BTF standard would be 130 ppmv assuming that the requisite cost-effectiveness information continues to suggest that a BTF standard is warranted. The two LWAKs that are equipped with wet scrubbers achieved emission levels below 45 ppmv.

c. MACT floor for new sources. At proposal, the Agency defined MACT floor control for new sources as a venturi scrubber with a hazardous waste MTEC of 14 g/dscm or less, and identified a floor level of 62 ppmv.

As for existing sources, the data analysis method used at proposal for new sources is appropriate and, consequently, floor control for new sources would be defined the same as at proposal. Excluding a computed emissions variability, the floor emission level would be 43 ppmv rather than 62 ppmv.

d. BTF considerations for new sources. The Agency did not propose a BTF standard for new sources because the floor standard was based on best available control technology: wet scrubbing. We have no new information in the revised database that would indicate that this conclusion at proposal should be revisited.

7. *Carbon Monoxide* (CO). The Agency proposed a MACT standard for CO of 100 ppmv based on a hourly rolling average (HRA). We continue to believe that this standard is appropriate for the reasons expressed in the preamble to the proposal.

8. *Hydrocarbons* (HC). The Agency proposed a HC level of 14 ppmv based on floor control using good combustion practices. Although we continue to believe that floor control is good combustion practices, our engineering evaluation of the revised database suggests that a floor standard of 10 ppmv, HRA, may be more appropriate. The single LWAK facility in the revised emissions database that could not achieve a HC standard of 10 ppmv (perhaps because of trace organics in the raw material) has stopped burning hazardous waste. Data from that facility have been excluded in the revised analysis. Although the remaining LWAKs appear to be able to meet a HC standard on the order of 6 ppmv, it may be more appropriate to establish the standard at 10 ppmv. This is because we are not aware of an engineering reason that LWAKs using good combustion practices should be able to achieve lower HC emissions than incinerators. Given that the incinerator HC standard would be 10 ppmv, that standard also appears to be appropriate for LWAKs.

[44] See discussion in Part Two, Section II.D.

**Part Three: Implementation**

*I. Compliance Date Considerations*

The Agency proposed that all sources subject to the final rule be in compliance with the final standards three years following the effective date of the rule (61 FR 17416). The proposed compliance period is consistent with the CAA, which defines the maximum compliance period for sources regulated under the statute as three years, with the possibility of a one-year extension for those sources that adequately demonstrate a need for additional time for the installation of emission controls. The Agency proposed the maximum compliance period allowed by the Act because this rule will likely require the majority of units, currently operating under RCRA regulations, to undergo substantial modifications to come into compliance with the potentially more stringent final MACT standards.

The general provisions of 40 CFR Part 63 do not require a demonstration of compliance until 240 days following the compliance date. This 240 day period between the compliance date and the demonstration of compliance is clearly not appropriate for HWCs because these devices are presently regulated under RCRA via enforceable operating limits, and in this interim period the enforceable operating limits would be undefined (61 FR 17415).

Therefore, to provide consistency with the currently-applicable RCRA regulatory compliance scheme, the Agency departed from the general requirements applicable to MACT sources and proposed a revised definition of compliance date. The proposed definition of compliance date would require sources to complete installation of controls and to

successfully complete performance testing and certify compliance *within* the three-year compliance period, not by a date 240 days after the three-year compliance period. *Id.* In addition to the revised definition of compliance date, the Agency also proposed a number of extra consequences for HWC sources that are not in compliance by the compliance date: (1) Immediate termination of waste-burning activities; (2) loss of RCRA permit or interim status; (3) a requirement to obtain a new RCRA permit; and (4) compliance with MACT standards for new sources.

In response to the proposal, the Agency received comments suggesting the three-year compliance period would be impossible to meet due to a number of competing factors, and that more time would be necessary to comply with the rule. These factors included permit modification, installation of controls, and documentation of compliance. Furthermore, commenters expressed serious concerns about combining these factors with the consequences of missing the compliance date. Industry commented that under this proposed approach facilities engaged in legitimate efforts to comply with the standards would be forced to terminate waste-burning activities, and be subjected to burdensome consequences that are unnecessary to protect the environment or ensure the public's safety.

However, EPA has become persuaded by commenters concerns regarding the ability of HWC sources in particular to comply with the proposed standards by the compliance date. Sources will have to modify their RCRA permits. Further, some sources may choose to pursue waste minimization strategies. For these reasons, the Agency is considering certain actions that may be finalized in advance of the final HWC rule such as, the streamlined permit modification procedures discussed at 17455 in the proposal; as well as, the waste minimization option for extension of the compliance date to allow for the application of waste minimization controls to meet the final standards discussed at 17417. The streamlined permit modification procedures would reduce the administrative requirements and time necessary to begin modification procedures required to comply with the final standards. The waste minimization compliance date extension option, which provides an additional avenue for facilities to request an extension of the compliance date, would afford facilities that choose to institute waste minimization measures an additional year to complete these actions.

However, even with the special provisions under consideration, sources may require the full amount of time allowed under the CAA to comply. Therefore, the Agency is also considering a revised implementation scheme that will allow for a simplified approach consistent with the implementation of general CAA-MACT rules. This approach would provide both additional relief to sources complying with the final rule, and information regarding a source's compliance status on the compliance date for the Agency. The specifics of this new option are explained in greater detail in the following paragraphs. Comments are requested on this new approach to implementing the HWC MACT standards.

A. Definition of Compliance Date

Today, the Agency is considering a revision to the proposed definition of compliance date. Under this revised approach, HWC sources would follow the CAA-MACT schedule for demonstration of compliance, through MACT performance testing and submission of test results, contained in § 63.7. Under that section, affected sources must conduct performance tests within 180 days following the compliance date, and submit the results of the tests 60 days following the completion of the performance test.[45] This CAA-based approach responds to the comments questioning our revised definition of compliance date and would achieve a more consistent implementation framework. However, because the Agency is concerned about the compliance status of affected sources on the compliance date, the Agency also seeks comment on provisions to enhance the general requirements for HWCs with a requirement for the submission of a ''precertification of compliance'' in the final rule. A precertification of compliance would require facilities to precertify their compliance status on the compliance date. The details of the precertification of compliance are described in greater detail in the following paragraphs.

B. Pre-Certification of Compliance

Today the EPA is seeking comment on an option which would require sources to submit a notification to regulatory agencies that details the operating limits a unit will be operated under in the interim period following the compliance date but before the results of the initial comprehensive performance test are submitted. This notification, the precertification of compliance, would include all of the information necessary to determine the compliance status of an affected source (e.g., automatic waste feed cutoff limits, feedrate limits, emission control device operating limits, etc.) during the 240 day period after the compliance date. At a minimum, the facility would be required to establish operating limits on all of the parameters identified in the proposed monitoring requirements found in table V.2.1 at 17419 of the proposed rule. This approach is appropriate because these facilities are already regulated under RCRA. There should not be any ambiguity for these facilities in terms of being between regulatory regimes at any point in time.

The operating limits in the precertification of compliance would be enforceable limits.[46] However, if following the initial comprehensive performance test, the facility's precertification of compliance designated operating limits are found to have been inadequate to ensure compliance with the MACT standards, the facility will not be deemed out of compliance with the MACT emissions standards. EPA invites comment on this approach, and specifically invites comment on the necessity of establishing operating limits on the entire set of parameters identified in table V.2.1.

C. Consequences of Non-compliance

As mentioned earlier, the Agency proposed a number of serious consequences that would befall a source that misses the compliance date (61 FR 17416). The Agency proposed these consequences to provide an incentive for affected sources to move swiftly to comply with the final standards. In response to the proposal, through written comments from industry and during round table discussions with

[45] In the HWC proposed rule, however, the Agency allowed sources 90 days to submit test results because D/F analyses can require more time than traditional MACT analyses. We continue to believe that this 90-day allowance is appropriate.

[46] The Agency notes that under this scheme facilities are still subject to the RCRA emission limitations, and the associated operating limits and enforcement actions until removal of the air emission limitations from the RCRA permit. However, because on the compliance date all facilities must be compliance with the emission standards of the final MACT rule, the Pre-COC operating limits, which are expected to be more stringent than current RCRA emission standards, take precedence over the RCRA permit limits except where the RCRA permit limits are based on a more stringent standard adopted under the Omnibus provisions of RCRA section 3005. Furthermore, EPA notes that compliance with Pre-COC operating limits that are based on standards that are more stringent than RCRA emission standards assures compliance with the RCRA based emission standards.

affected parties, the Agency received information suggesting that imposition of these consequences through regulatory language was unnecessary. Consequently, the Agency is considering deleting those specific consequences from the regulatory language and relying on the regulating agency's policy regarding enforcement response to govern the type of enforcement response at a facility that fails to meet the compliance deadline.

Upon review of this enforcement process, the Agency is presently inclined to apply the normal CAA enforcement procedures to non-compliant sources in the final rule for hazardous waste combustors.

*II. Compliance Requirements*

In this section, we discuss several compliance issues: (1) Compliance with carbon monoxide (CO) and/or HC emission standards; (2) compliance with a startup, shutdown, and malfunction plan when not burning hazardous waste; (3) metals extrapolation and interpolation considerations; (4) site-specific variances for cement kilns and LWAKs because of inability to meet the standards solely due to metals or chlorine in raw materials; and (5) emissions averaging for cement kilns with unique design or operating features.

A. Compliance With CO and/or HC Emission Standards

The Agency proposed MACT emission standards for both CO and HC for incinerators and LWAKs as surrogates to control emissions of organic HAPs. Cement kilns would be required to comply with either a CO or HC standard because of raw material considerations. See 61 FR at 17375–6. The Agency explained that relying on only CO or HC alone appeared to have drawbacks, and thus proposed that incinerators and LWAKs comply with emissions standards for both. Nonetheless, the Agency acknowledged that requiring compliance with standards for both CO and HC may be unnecessarily redundant, and requested comment on the following alternative approaches: (1) Giving sources the option of complying with either CO or HC; or (2) establishing a MACT standard for either CO or HC, but not both.

Although the Agency is continuing to evaluate comments and options [47] on how to limit CO and/or HC to control organic HAPs, we invite comment on an additional feature of the first option whereby a source can elect to comply with either the CO or HC standard. Under this approach, a source that elects to comply with the CO standard (rather than the HC standard) would be required to document during the performance test compliance with the HC limit. This is necessary because we have some (limited) data that show a source can have HC levels exceeding the standard discussed in today's notice while meeting the CO limit. Even though the vast majority of the data indicate that HC will be low when CO levels are low, a requirement to confirm this relationship on a site-specific basis may be warranted.

To confirm the relationship during the performance test, the source would use a portable HC monitor to document that HC levels are below the MACT standard. This is not expected to be a burdensome test. Further, however, to ensure that the CO/HC relationship is maintained over the range of operating conditions that the facility may ultimately employ, we are considering whether to require the source to establish limits on key operating parameters than can affect combustion efficiency (and thus HC emissions). The limits would be established based on parameter values observed while demonstrating the CO/HC relationship during the performance test.

We specifically request comment on which key parameters should be limited to ensure that the CO/HC relationship is maintained. Further, we request comment on whether these key parameters should be identified on a national basis or a site-specific basis during review of the performance test protocol. In providing comment, note that the Agency has already proposed to establish site-specific limits on several combustion-related parameters to ensure compliance with the D/F emission standard (e.g., minimum combustion chamber temperature; maximum waste feedrate; and for batch fed units, maximum batch size and feeding frequency, and minimum oxygen concentration in the combustion gas). In addition, note that it may be appropriate to identify as key parameters (for purposes of ensuring that the CO/HC relationship is maintained) those parameters for which limits are currently established during destruction and removal efficiency (DRE) testing, including: (1) Minimum combustion temperature at each combustion chamber or feed location; (2) minimum combustion gas residence time (i.e., maximum combustion gas velocity, or appropriate surrogate); and (3) minimum combustion gas oxygen concentration. If the Agency determines that DRE testing is not necessary for some types of sources as discussed in Section III below, testing to document the CO/HC relationship would be used to establish limits on these heretofore DRE-limited parameters.

B. Startup, Shutdown, and Malfunction Plans

The Agency proposed that startup, shutdown and malfunction plans are not necessary for hazardous waste combustion sources because the allowances that such plans provide are not appropriate for hazardous waste combustors (61 FR 17449). Specifically, the Agency stated that EPA did not need information regarding how quickly a source is able to correct a malfunction to come back into compliance with the standards because affected sources cannot burn waste unless the source is in compliance with all applicable standards.

However, in comments, the Agency was informed of a few situations in which it is appropriate for sources to comply with a startup, shutdown, and malfunction plan. These situations include those in which sources temporarily stop burning hazardous waste but intend to resume burning hazardous waste in the near future. The examples presented to the Agency involve production units (i.e., cement kilns, LWAKs, and possibly on-site incinerators equipped with waste heat boilers to generate steam or heat at a chemical production facility) that must continue operations following waste feed cutoff to maintain production at the facility. Also, commenters cited temporary shutdowns necessary for planned maintenance to be performed on the unit.

In light of these comments, the Agency is rethinking its proposed approach and requests comment on a requirement for sources to comply with the provisions listed in § 63.7 regarding startup, shutdown and malfunction plans, including the reporting requirements of § 63.10(d)(5)(I). These provisions would apply at HWCs when waste is not being fed or does not remain in the combustor, excluding automatic waste feed cutoff events.

Sources would be subject to the standards at all times, and the malfunction plan would only apply during times when the source is either temporarily not burning waste or when

[47] We are also evaluating another option whereby compliance with the HC limit would be required, and a site-specific CO limit (but not lower than 100 ppmv, the proposed MACT standard) would also be established. This option would provide assurance that HC emissions are within allowable levels, and by also limiting CO, it would give the operator advance notice of a potential increase in HC levels, thus helping to avoid an exceedance of the HC standard.

waste no longer remains in the combustor. For example, if a source is temporarily not burning waste and a malfunction occurs that is followed by an exceedance of an applicable standard, the source will not be in violation as long as it is complying with the procedures outlined in the malfunction plan. On the other hand, if a source is burning waste and a malfunction occurs that necessitates an automatic waste feed cutoff followed by an exceedence of a standard, the source would be in violation regardless of whether the source is complying with the malfunction plan.[48]

Therefore, under this option, a source may develop a malfunction plan that details the situations in which the source is intentionally not feeding waste, or that details the situations when certain emission control devices will not be in operation.

C. Metals Extrapolation and Interpolation Considerations

In the NPRM, the Agency discussed the operating conditions under which a source will likely operate to demonstrate compliance with the metals emission limits identified in the proposed rule (61 FR at 17428–30). The Agency also acknowledged in the proposal that operators will likely want to operate their units during comprehensive performance tests close to the edge of the operating envelope so that they can comply with the emission standards and still achieve the necessary operational flexibility required by the facility. EPA further stated that, to achieve a sufficient level of operational flexibility, sources could be expected to engage in the spiking of metals into the waste matrix, which is a practice that concerns the Agency. EPA's concern extends to the overall metals loading to the environment (for example, Hg and Pb), exposure of facility employees, and exposure of surrounding community to higher than normal metals concentrations due to testing procedures that are for the purposes of developing waste feedrate limits and operational flexibility.

Therefore, the Agency has investigated approaches that may provide a method to afford additional metals feedrate flexibility without the need of high metals spiking (otherwise necessary to identify a metals feedrate for an associated metals emission level).[49] One promising approach would use a statistical extrapolation methodology.[50]

Under this approach a source would use the metal feedrates and emission rates associated with a MACT performance test to extrapolate to higher allowable feedrates and emission rates. The Agency believes that the upward extrapolation procedure developed can conservatively be used to allow for higher metals feedrate limits, but still ensure that the facility is well within any applicable MACT (or RCRA) emissions limit.[51] Although downward interpolation (i.e., between the measured feedrate and emission level and zero) was also investigated, the Agency is concerned that downward interpolation may not be conservative primarily because system removal efficiency decreases as metal feedrate decreases. Thus, projected emissions at lower feedrates may in fact be lower than actual emissions. Consequently, the Agency is not inclined to allow downward interpolation.

The Agency expects that any extrapolation methodology would be reviewed and approved by regulatory officials. Sources would request approval to extrapolate feedrates as part of the performance test plan that would be submitted at least 60 days prior to the test date. See § 63.7(b) and (c) and proposed § 63.1208. The review would consider in particular whether: (1) Performance test metal feedrates were appropriate (e.g., whether feedrates were at least at normal levels; depending on the heterogeneity of the waste, whether some level of spiking would be appropriate; and whether the physical form and species of spiked material is appropriate); and (2) whether the requested, extrapolated feedrates were warranted considering historical metal feedrate data. In addition, regulatory officials would review the performance test results in making a finding of compliance required by § 63.6(f)(3) to ensure that emission test results have been interpreted properly and that the extrapolation procedure is appropriate for the source.

The Agency is discussing this approach with some hesitation because facilities would be able to: (1) Feed metals at higher rates without a specific compliance demonstration of the associated metals emissions; and (2) obtain approval to feed metals at higher levels than normal, even though all combustion facilities should be trying to minimize metals feedrates. However, because the Agency remains concerned that sources would otherwise continue to feed metals during compliance testing at high levels,[52] to it may be appropriate to consider this extrapolation approach as a means to reduce unnecessary emissions and costs incurred by facilities (and the health risk to testing personnel) during performance tests.

EPA invites comment on this extrapolation approach, and in particular, as to whether the approach is adequately conservative and practicable.

D. Consideration of Site-Specific Variances for Cement Kilns and LWAKs

The Cement Kiln Recycling Coalition (CKRC) has provided comments on the proposed rule suggesting that two variance procedures be incorporated in the final rule: (1) Waiver of the Hg, SVM, LVM, and/or HCl/Cl2 standards when metals or chlorine in minerals and related process materials cause the source to exceed the standard even though the source is demonstrable using MACT control; and (2) waiver of the HC standard for the main stack of a long kiln that does not monitor CO or HC in the by-pass duct when organics desorbed solely from minerals and related process materials cause the source to exceed the standard in the main stack.

[48] This situation would be considered a violation unless the source can document that the exceedance occurred after waste was no longer in the combustor and the residuals of the waste combustion process had been treated by the pollution control equipment.

[49] See USEPA, Draft Technical Support Document for HWC MACT Standards (NODA), Volume III: Evaluation of Metal Emissions Database to Investigate Extrapolation and Interpolation Issues, April 1997.

[50] Extrapolations would be based on applying a conservative ''universal variability factor'' (UVF) multiplier to the test condition average. The UVF is based on evaluating within-test condition emissions variability for each metal in the Agency's trial burn and BIF certification of compliance metal emissions database. It represents (in log form) a ''residual'' level that 95 percent of the residual population is below, where the residual is defined as the difference between the log of the emission level for each test condition run and the log of the test condition average. The UVF would range from 3x to 5x depending on the volatility grouping for the metal. Given the conservatism of the UVF, a less conservative approach would be used (i.e., melding extrapolating using the UVF with extrapolating from the highest run in a test condition) to extrapolate to feedrate and emission levels close to levels actually tested.

[51] Under the extrapolation approach, sources would be required to feed metals at no less than normal rates to narrow the amount of extrapolation sought. Further, we expect that some spiking would be desired to increase confidence in the measured feedrate levels that will be used to project higher allowable feedrates (i.e., the errors associated with sampling and analyzing heterogeneous wastestreams can be minimized by spiking known quantities). However, the Agency does not want sources to extrapolate to allowable feedrates that are significantly higher than their historical range of feedrates (i.e., extrapolated feedrates should be limited close to the historical levels that a source actually fed). This may work to limit the practical utility of extrapolation.

[52] To achieve operational flexibility due to practical testing and compliance restrictions.

CKRC notes that the Conference Report for the Clean Air Amendments of 1990[53] states that:

For categories and subcategories of sources of hazardous air pollutants engaged in mining, extraction, beneficiation, and processing of nonferrous ores, concentrates, minerals, metals, and related process materials, the Administrator shall not consider the substitution of, or other changes in, metal- or mineral-bearing raw materials that are used as feedstocks or materials inputs, * * * in setting emission standards, work practice standards, operating standards or other prohibitions or requirements or limitations under this section for such categories and subcategories.

It should be noted that this language is not reflected in the legislative text, which states without caveat that MACT standards may be based on ''process changes, substitution of materials or other modifications.'' CAA section 112(d)(2)(A).[54] However, assuming that CKRC's request for these variances has merit, and if the variances are incorporated in the final rule, they would apply to LWAKs as well given that LWAK raw materials could also cause those combustors to exceed the standards using MACT control. We solicit comment on whether these variances are appropriate and workable, and on the potential issues raised below.[55]

1. *Variance for metals or chlorine in minerals and related process materials.* It may be appropriate to waive any MACT standard for a metal or group of metals or the standard for HCl/Cl2 if the source documents that it cannot comply with the standard while using MACT control solely because of raw material feed. As examples, MACT control for Hg would be hazardous waste feedrate control at a specified MTEC. MACT control for SVM and LVM would also be feedrate control at a specified MTEC and compliance with the PM standard. A condition of the variance could be that the source would be required to document that the concentration of metal or chlorine (for which it is seeking the variance) in hazardous waste and any non-mineral feedstock is within the range of normal levels for the industry. This would ensure that metals and chlorine emissions attributable to non-mineral feedstreams are equivalent to those from sources meeting MACT.

We therefore request comment on the following issues:

- How would normal levels be determined? What statistics should be used? What should be the baseline year for the determination (e.g., a given year (2000, or the compliance date of the rule)?
- Should the variance be granted only if the hazardous waste and/or non-mineral feedstreams have lower than normal levels of metals or chlorine? How much lower (e.g., 25th percentile levels, 40th percentile levels)?
- Would it be necessary to establish the normal levels in the rule, or should they be established initially, on a case-by-case basis?
- Should the Agency be concerned if levels of metals or chlorine in mineral feedstocks decline over time thus enabling the source to meet the standard? If so, what monitoring approach would be appropriate to identify when that occurred?
- When should variance petitions be submitted to the State or EPA regulatory officials (e.g., 120 or 180 days prior to the compliance date)?

2. *Variance for organics in minerals and related process materials.*

Although current BIF regulations limit HC levels in kilns to 20 ppmv irrespective of the source of the hydrocarbons[56] and the Agency proposed to maintain that standard under MACT, CKRC notes that some sources have to operate inefficiently to meet the standard. For example, a source may have to operate back-end temperatures at higher than normal levels to oxidize enough of the organics being desorbed to meet the HC standard. This means that more fuel than normal must be fired to provide the extra heat at the back-end.[57]

CKRC has suggested approaches whereby a source can document that hazardous waste is being burned in compliance with either the CO limit of 100 ppmv or the HC limit of 10 ppmv.[58] In situations where the kiln can monitor a representative sample of combustion gas at mid-kiln at least temporarily during a performance test to document compliance with the CO limit of 100 ppmv (or a HC limit of 10 ppmv), limits on key combustion parameters would be established based on operations during the performance test. The operating limits would be continuously monitored to ensure compliance with the CO or HC limits. Limits on the following operating parameters would be established: kiln gas oxygen at the kiln outlet; kiln gas residence time using raw material feedrate as a surrogate; and combustion zone temperature, using an appropriate surrogate or measured at an appropriate location.

CKRC also suggested that sulfur hexafluoride (SF6) could be used as a continuously monitored compliance parameter in lieu of limits on other parameters, except oxygen. This is because SF6 is recognized as a temperature labile compound—it is more stable than most any other toxic compound under a temperature-failure mode of organics destruction. SF6 is not, however, an indicator of oxygen-deficient combustion failure modes—it is destroyed at high temperatures irrespective of oxygen levels. Given that both adequate temperature and oxygen are necessary for good combustion, an oxygen limit as well as an SF6 feed limit and emission limit would be established under this option based on a performance test documenting compliance with either the CO or HC limits at mid-kiln.

Finally, CKRC suggested variance approaches for the more problematic situation where a kiln is not able to sample kiln gas at mid-kiln for compliance with the CO or HC limit. One approach would be to allow a kiln to document compliance with the CO limit of 100 ppmv or the HC limit of 10 ppmv in the main stack when burning hazardous waste but temporarily feeding imported, low organic raw material. Under this approach, as with the approaches discussed above, operating limits on oxygen levels in kiln gas at the kiln outlet, residence time of combustion gas, and combustion zone temperature would be established based on a performance test using the low organic raw material. Also, continuous monitoring of limits on feedrates and emission rates (based on performance testing) of SF6 could be used in lieu of establishing limits on residence time and temperature.

E. Emissions Averaging for Cement Kilns

Several cement kilns have unique design or operating procedures that warrant special consideration in

[53] H.R. Rep. No. 101–952, at p.339, 101st Cong., 2d Sess. (Oct. 26, 1990).

[54] CKRC cites additional authority in its letter to B. Holloway and F. Behan (USEPA) of March 10, 1997 addressing these issues. Available in RCRA Docket # F–97–CS4A–FFFFF.

[55] To meet its RCRA mandate, the Agency would continue to evaluate emissions under the omnibus permit authority to ensure that controls were adequate to protect human health and the environment.

[56] The Agency has acknowledged that HC in the main stack of a long kiln can be generated by desorption of trace organics in raw material feedstocks as well as from fuel combustion.

[57] Higher back-end temperatures may be associated with higher rates of D/F formation.

[58] Neither approach would appear to be appropriate for kilns that feed hazardous waste at locations other than the clinker end. The concern is that the kiln gas that is withdrawn for testing at the mid-kiln location for compliance with the CO or HC limit may not be representative of hazardous waste combustion gases (i.e., either because the hazardous waste is being fired downstream or, if the waste is fired at mid-kiln, the waste combustion gases may not be thoroughly mixed at the point of kiln gas withdrawal for CO and HC monitoring).

demonstrating compliance with the MACT standards, as discussed below.

1. *Preheater or Preheater/Precalciner Kilns with Dual Stacks.* Some preheater or preheater/precalciner kilns are designed with separate main and alkali by-pass stacks. To demonstrate compliance with the emission standards (other than the CO/HC standards where compliance is based on emissions in either the main or by-pass stack), it is appropriate to allow such kilns to document either that both stacks meet the applicable emission limits, or that the stacks meet the limits considering flow-weighted average emissions. This is the approach currently used for compliance for the PM NSPS, and it is appropriate as well for the MACT standards that the Agency has proposed.

2. *Kilns that operate an in-line raw mill.* Some cement kilns vent the kiln gas through the mill that grinds the raw material (i.e., raw mill) to help dry the raw material before charging to the kiln. Such designs are referred to as ''in-line raw mills''. When the raw mill is out of service for maintenance, approximately 10% of the time annually, kiln gas by-passes the mill and is vented to the stack after passing through the PM control device. (Stored milled raw material is charged during these periods of mill downtime.) The Cement Kiln Recycling Coalition indicates that emissions of HAPs that the Agency proposed to regulate can be different when gas is vented through the raw mill versus periods of time when the mill is out of service.[59]

It appears appropriate to base compliance with the MACT emission standards for such kilns on a time-weighted average basis. Sources would use historical information on utilization time for the in-line raw mill to document the time-weighted average and would present this information to regulatory officials as part of the test plan. Further, sources would be required to conduct performance testing under both operating conditions: with the raw mill on-line and off-line.

## *III. DRE Testing Considerations*

In the NPRM, the Agency proposed that the 99.99 percent destruction and removal efficiency (DRE) standard be retained under RCRA authority. See 61 FR at 17447. Although EPA could have proposed the DRE requirement as part of the MACT standards to help control organic HAPs, the Agency explained that doing so would have raised significant practical implementation concerns. This is because MACT standards are generally self-implemented by facilities to a large degree whereas DRE testing has historically involved a detailed and iterative process between a facility and the regulatory agency.

The Agency received comments that raised other concerns, including: (1) Whether it is necessary for a source to actually perform a DRE test to ensure that it is achieving DRE;[60] and (2) how can the Agency ensure that RCRA DRE testing is coordinated with MACT performance testing.

The Agency has reconsidered DRE testing issues and is today requesting comment on options for ensuring compliance with a DRE standard, and how to coordinate DRE testing with MACT performance testing.

### A. Options for Ensuring Compliance with a DRE Standard

The Agency has investigated whether compliance with the CO or HC MACT standards would ensure that a source is achieving 99.99% DRE[61]. The vast preponderance of the data indicate that when a source is achieving CO levels under 100 ppmv or HC levels under 10 ppmv, it is virtually always also achieving 99.99% DRE.[62] The Agency's investigation noted, however, an atypical, failure mode for the CO/HC versus DRE relationship: when low organic content waste is fed into a region of a combustor other than the flame zone (e.g., into an unfired afterburner). One test condition of the approximately 455 investigated failed the CO/HC versus DRE relationship for this reason. This was a highly unusual test condition, and does not represent good combustion practice. CO levels were likely low because flame combustion was not occurring, and HC was likely low because the waste could have had only trace levels of toxic organics that did not contribute significantly to the HC loading (but which could nonetheless pose a health or environmental hazard).

Given the general relationship between CO, HC, and DRE and the highly unusual nature of the lone exception, the Agency is considering whether DRE testing is warranted in all cases for sources complying with the MACT CO and HC standards. The DRE test is a complicated, expensive test. In addition, although it can help indirectly to ensure that a source is operating under good combustion conditions, it may not provide the operationally direct level of assurance of good combustion conditions that CO or HC does. The data show that sources can be achieving 99.99% DRE even though CO or HC levels exceed values considered to represent good combustion (i.e., CO of 100 ppmv, HRA, and HC of 10 ppmv, HRA).[63]

Accordingly, the Agency is considering three options for reducing the DRE testing burden, as discussed below.[64] Under all options where DRE testing would be waived, a source would have to be in compliance with the final MACT standards for CO/HC, which will be sufficient to show ensure compliance with the DRE standard as well.[65]

---

[59] CKRC Comments, August 19, 1996, pp 112–113, Docket Number RCSP–0170.

[60] The statutory minimum technology requirement for incinerators (see RCRA 3004(o)(B)) requires the ''attainment'' of 99.99 percent destruction and removal efficiency. DRE testing could be replaced by an alternative that is equally or more stringent (e.g., compliance with stringent limits on CO or HC) to ensure attainment of 99.99 percent DRE.

[61] The Agency evaluated approximately 455 DRE test conditions, where CO was less than 100 ppmv and 273 test conditions where HC was less than 12 ppmv, to determine if compliance with stringent CO and HC limits would ensure that 99.99% DRE was being achieved. Ten sources failed DRE even though CO or HC levels were below 100 ppmv or 12 ppmv (on a run average basis), respectively. Nine of the failures could be explained by: (1) Selecting principal organic hazardous constituents (POHCs) that were also common products of incomplete combustion; (2) feeding low concentrations of POHCs (a phenomenon of DRE testing is that it is very difficult to measure 99.99% DRE when POHCs are fed at low concentrations, even though emission concentrations may be trivial); or (3) feeding aqueous waste with such low concentrations of organics that, even under poor combustion conditions, the waste did not generate high levels of CO or HC. See USEPA, ''Draft Technical Support Document for HWC MACT Standards (NODA), Volume II: Evaluation of CO/HC and DRE Database'', April 1997.

[62] It could be argued that this is due to two factors: (1) during successful DRE testing many sources operated at CO or HC levels that were well below the 100/10 levels; and (2) it is not clear that those sources would continue to achieve 99.99% DRE at higher CO or HC levels (but not exceeding the 100/10 levels). This is unlikely to be a major concern, however, because combustion devices operating at CO levels under 100 ppmv are generally considered to be operating under good combustion conditions that would ensure 99.99% DRE in any event.

[63] Under an option the Agency is considering for establishing MACT standards for CO and HC, a source would be able to elect whether to comply with either the CO or HC standard. Although CO is not a direct measure of HC emissions, the Agency is considering requiring sources that elect to comply with the CO standard to document that their HC emissions also meet the standard.

[64] The Agency's analysis to date has focused on the 99.99% DRE standard. We have not investigated whether sources that burn ''dioxin-listed waste'' under § 264.343(a)(2) and are required to demonstrate 99.9999% DRE are likely to achieve that DRE when operating under stringent CO and HC levels. Given that there are few HWCs that are permitted to manage such wastes and given the high toxicity potential of such wastes, the Agency is inclined to continue to require DRE testing at facilities handling those wastes.

[65] Long cement kilns generally cannot meet the stringent CO and HC limits applicable for waste combustion (i.e., 100/10 ppmv) because of organics in raw materials. Thus, the Agency proposed that

B. DRE As a MACT Versus RCRA Standard

In investigating approaches to ensure coordination of DRE testing with MACT performance testing, the Agency has reconsidered whether the DRE standard could be effectively implemented as a MACT standard (to help control organic HAPs). To ensure coordination of DRE and MACT performance testing, the Agency is considering extending the test plan review period from the proposed 60 day period (see proposed § 63.1208(e) and § 63.7(b)(1)) to one year to allow regulatory officials time to consider DRE testing in context with MACT testing. With this opportunity for coordinating the testing, the Agency's concerns expressed at proposal about the difficulty of implementing the DRE standard under the self-implementing regime of MACT may be largely overcome (i.e., if the Agency incorporates into the MACT standards opportunity to review and approve the DRE test protocol). Thus, the Agency is considering incorporating the DRE standard as a MACT standard.

Sources wishing to perform a combined DRE and comprehensive performance test would have to submit the test plan one year in advance of the test. If the review requires more than one year, the Agency can extend the testing date for coordination purposes (assuming the source has made a good faith effort to cooperate with regulatory officials to identify an appropriate test protocol). However, there would be no extensions granted for the initial comprehensive performance test because it is imperative that sources document compliance with the MACT emission standards (including those for the high priority HAPs, D/F, Hg) on schedule. Sources wishing to perform a combined initial comprehensive performance and DRE test would therefore have to be diligent in working with regulatory officials to ensure that the combined test protocol is developed and approved in a timely manner.[66]

The Agency invites comment on these issues, including whether DRE should be incorporated as a MACT standard, and irrespective of that decision, whether a one-year review period provides adequate opportunity to review a combined DRE test and comprehensive performance test protocol.

*IV. Notification and Reporting Requirement Considerations*

A. Public and Regulatory Notification of Intent to Comply

In the proposed rule, the Agency requested comment on strategies to encourage or require affected sources to comply with the final emissions standards at the earliest possible date. The Agency also asked for views on methods that could be used to determine when a source could realistically conclude whether it will comply in a timely fashion with the final standards (61 FR at 17416). A number of commenters argued for the Agency to require a submission from affected sources that identifies whether and how the facility intends to comply with the final standards. This notification requirement was referred to as a ''Notification of Intent to Comply.'' The purpose of the submission would be to identify the sources that will not comply with the final standards so that those sources could be forced to terminate waste burning activities as soon as possible following the effective date of the final HWC rule.

Other commenters, responding to our request for comment regarding the proposed permit modification options (61 FR at 17455), suggested that all facilities be required to submit a plan that outlines the procedures each facility intends to follow to comply with the final standards. However, the purpose of this submission would be to begin an early process of communication between the public and the facility through the public disclosure of the facility's compliance strategy.

The Agency has reviewed these comments and supports the goals and purposes of a requirement that compels sources to identify their intentions to comply with the final rule, and to describe how they will achieve that compliance. Furthermore, the Agency supports any process that promotes public notification and interaction with respect to a hazardous waste combustor's future operations. To the extent that some limitations on public participation would be the result of a streamlined permit modification process that may be finalized ahead of the HWC MACT rule, promotion of early public notification and intervention in this part of the rule is appropriate and desirable given our general policies in that regard (see, e.g., RCRA Expanded Public Participation Rule, 60 FR 63417 (Dec. 12, 1995)). Therefore, the Agency is considering a notification requirement, based on and growing out of ideas that were presented in comments, that may be applied to sources affected by the final rule. This notification requirement, called the Public and Regulatory Notification of Intent to Comply (PRNIC), would involve the facility submission and public disclosure of a plan that relates to whether and how the facility intends to come into compliance with the final standards.

However, due to enforcement and implementation issues, the Agency is concerned that it is not feasible to use a submission that identifies only a facility's future ''intentions'' as the legal basis to force a facility to terminate waste burning activities before the statutorily based compliance period of three years. Moreover, any official review and approval of such submissions could conceivably slow down the rate at which facilities come into compliance with the final standards. This would thwart the objectives of a streamlined permit and compliance process.

The Agency believes that the most effective application of such a submission is to promote public awareness, as well as discussion between a facility and its community, which will afford them an opportunity to engage in discussions regarding the details of the facility's plans to comply with the final standards. However, the Agency does not intend for this submission to undergo a formal review by the regulatory agencies involved.

The Agency requests comment on this option which requires sources to prepare and submit for public comment a notification identifying the source's intentions to comply with the final rule as well as the strategy they intend to follow to assure compliance by the compliance date. This notification requirement would apply to all sources

such kilns comply with a CO level of 100 ppmv or a HC level of 20 ppmv. Notwithstanding the inability to document good combustion conditions by complying with stringent CO/HC limits, the Agency believes that cement kilns that fire hazardous waste into the clinker end of the kiln will virtually always achieve 99.99% DRE because, to make marketable products, clinker temperatures must be approximately 2700° F, and combustion gas temperatures are typically several hundred degrees hotter than the solids temperature. These temperatures are theoretically high enough to ensure destruction of organic compounds in the waste. Consequently, such kilns should not be precluded from the waivers discussed in the text. If such a kiln were to inject hazardous waste at nonflame zone locations such as mid-kiln or at the raw material end of the kiln, however, we are concerned that DRE may not always be achieved. The kiln would not be eligible for the DRE waiver.

[66] The Agency also considered requiring sources to submit draft test protocols one year prior to the test date, regardless if the comprehensive performance test is to be combined with a DRE demonstration. We determined that may not be appropriate, however, because normal comprehensive performance tests should not require a review process longer than provided by the CAA-MACT general requirement. Therefore, the one-year test review period would only apply for those sources that wish to coordinate the comprehensive performance (or confirmatory) test with a DRE test.

burning waste on the effective date of the final HWC rule, and would require sources to prepare a draft notification, announce the availability of the draft notification as well as a future informal public meeting to discuss the draft notification, hold an informal public meeting, submit the final notification to all appropriate regulatory agencies, and update the notification as necessary.

The Agency intends for the information contained in the draft notification to provide enough detail so that the public can engage in a meaningful review of the facility's compliance strategy. For example, if in the draft notification a facility identifies and describes the type(s) of control technique(s) being considered, the facility should include, as appropriate, waste minimization and/or pollution control options that may have been evaluated.

EPA also requests comment on a requirement for affected sources to hold at least one informal meeting with the public before submitting the final notification to the appropriate regulatory agencies. The goal of this informal meeting is to provide a forum to facilitate dialogue between the affected source and its community. The meeting should provide an open, flexible and informal occasion for the facility and the public to discuss various aspects of the facility's compliance strategy because it provides the public direct input to the facility owners/operators. In addition, the meeting affords facility owner/operators the opportunity to gain an understanding of the public's expectations, which can then be addressed and included in the facility's final submission. The Agency anticipates that the facility and the public will share ideas, educate each other, and continue to establish a framework for sound communication. However, as suggested in comments received from CKRC,[67] the Agency understands that the early timing of the meeting may affect a facility's ability to have complete or fully accurate information, but the Agency believes that the benefits of early public involvement and access to information outweigh the drawbacks of incomplete information. Furthermore, the time period between the effective date of the HWC rule and the informal meeting announcement should provide a facility sufficient time to collect, analyze, select, and plan a compliance strategy. However, comments are invited on other appropriate time periods between the public notification and the informal public meeting, and on the time period necessary to collect the information required for the PRNIC.

Another timing issue relates to when a facility should notify the community regarding the availability of the draft PRNIC. At this stage, the Agency is considering to require that the notification be made on or before 210 days following the effective date of the final HWC rule. This would necessitate that an announcement of the informal public meeting and the availability of the draft PRNIC be made 30 days prior to the meeting in a manner that is likely to reach all affected members of the community. The Agency is considering that this announcement, of the informal public meeting and draft PRNIC availability, should be required in three ways: As a display advertisement in a newspaper of general circulation; as a clearly marked sign on the facility property; and as a radio broadcast. Each of these notices would have to include the date, time and location of the meeting, a brief description of the purpose, a brief description of the facility, a statement asking people who need special access to notify the facility in advance, and a statement describing how the draft PRNIC can be obtained. The Agency requests comment on this approach that requires facilities to hold an informal public meeting prior to the submission of the final PRNIC to the regulatory authorities.

An additional requirement of the notification approach being considered involves the submission, to the appropriate regulatory agencies, of the final PRNIC 270 days following the effective date of the final HWC rule. The submission would contain the following information: The name and location of the owner operator; the location of the source; a statement as to whether the source is a major or area source; a description of any waste minimization and pollution control technique(s) considered; a description of the emission monitoring technique(s) considered; a description of the waste minimization and pollution control technique(s) effectiveness; a description of the evaluation process used to select the waste minimization and/or pollution control technique(s); and an outline of the key dates in the process that the facility plans to follow to implement the selected waste minimization and/or pollution control technique(s). This submittal should also capture the major comments or ideas that were discussed in the public meeting or that were submitted in response to the release of the draft PRNIC.

The final requirement of the notification approach being considered involves updates to the final PRNIC following a significant change in the facility's implementation strategy. A significant change would be analogous to a change that would trigger a RCRA class two or class three permit modification request, and would apply only to changes that depart from the strategy described in the final PRNIC. Examples of some changes that may be considered significant changes are as follows: A change in the pollution control technique to be implemented; a request for permit modification; a request for an extension of the compliance date; or a decision to stop or to continue burning waste that is contrary to the final PRNIC. Additionally, all sources could be required to notify the public via a mailing to the facility's mailing list within 30 days following a determination that a significant change has occurred in the facility's implementation strategy. The change would have to be described in writing and made available to requesting parties via placement in an information repository or through direct transmittal. This requirement would be in keeping with the spirit of the PRNIC, which is to keep the public informed of any significant changes in the facility's compliance and implementation plan.

The Agency invites comment on this submittal and the submittal process, and requests information on the benefits and burden associated with such a process. The Agency specifically invites comment on the use of permit modification criteria to identify a significant change that would necessitate an update to the PRNIC.

B. Data Compression Allowances

The Agency is considering allowing the use of data compression techniques in the recording of continuously monitored parameters under this rule. This is in response to comments on the proposed rule regarding the additional burden associated with the proposed monitoring and recording requirements and specific requests to allow data compression. We are also considering revisions to parts 264, 265 and 266 that would be conforming revisions to ensure that the RCRA rules are consistent with similar provisions of the proposed part 63 rules.

Commenters raised the issue of an additional burden by the proposed monitoring and recording requirements. We do not agree that the proposed requirements pose significant additional record keeping burdens from current regulations (i.e., BIF rule) or existing

[67] Memorandum, from Craig Campbell (CKRC) to Matthew Hale Jr. (EPA), regarding compliance plans under the HWC MACT Rule, dated March 18, 1997.

permit requirements under RCRA. However, we are interested in reducing the information burden—for example, how much is recorded if the data is automatically evaluated under an established set of specifications, while maintaining the integrity of the data for compliance evaluation purposes.

Briefly, data compression is the process by which a facility automatically evaluates whether a specific data point needs to be recorded. Data compression does not represent a change in the continuous monitoring requirement proposed in rule. One-minute averages will continue to be generated. However, with data compression, each one-minute average will be automatically compared with a set of specifications to decide the need for recording. New data is recorded when the one-minute average value falls outside the set of specifications.

This option should provide a good opportunity to the regulating agencies to focus their review of operating data, because facilities using data compression will record data that is indicative of non-steady state operations more frequently than steady state operations. This will significantly reduce, up to 90%, the data subject to review by the regulating agency as the facilities' self-evaluate, under a previously approved set of specifications, the data being recorded.

The dynamics of monitored parameters are not uniform across the regulated universe, and establishing national specifications for data compression techniques in this rule may not be feasible. Different data compression techniques can be successfully implemented for a monitored parameter to obtain compressed data that reflect the performance on a facility specific basis. As a result the Agency is considering allowing the sources to request the regulatory agency to use data compression techniques that reflect site-specific conditions of the monitored parameters and establish data compression specifications accordingly. Upon approval, sources may start data compression techniques based on the approved set of specification.

At a minimum, a source implementing data compression will be required to record a value once every ten minutes. In combination with the appropriate set of specifications, a recorded value every ten minutes will result in a potential data recording reduction up to 90%.

As a guideline, for the regulating agencies and sources EPA has developed a table to use as a guideline developing site-specific specification for data compression techniques. These are the basis for the specification in the table:

1. *Data compression limit.* The closest level to a permit limit/standard at which reduced recording is allowed. Within this level, minute-by-minute data recording is required. The data compression limit should reflect a level at which the specific parameter is unlikely to exceed its permit limit within a one-minute change. The other consideration is to set a data compression limit at which owners and operators can practically implement data compression.

2. *Fluctuation limits.* The permissible deviation of new data value from previously generated value. This parameter is a reflection of tolerance of the agency to allow a parameter to change without requiring the data point to be recorded. The considerations to establish the fluctuation limits are (1) The potential of the regulated parameter to change in one minute and cause an exceedance of the permit limit on a rolling average basis and; (2) the maximum variation tolerated from a change of other related operating parameters (i.e., fuel and temperature, gas flow and APCD parameters).

We invite comment on allowing data compression under this rule, including revising parts 264, 265 and 266, and on the following table:

FLUCTUATION AND DATA COMPRESSION LIMITS EXPRESSED AS PERCENTAGES OF THE PERMIT/STANDARD LIMITS

| Device | Parameter | Fluctuation limit ± | Data compression limit |
|---|---|---|---|
| CEMS | Particulate matter | 10% | 60%. |
| CEMS | Carbon monoxide 1 hour | 10 ppm | 50 ppm. |
| CEMS | Total hydrocarbon | 2 ppm | 60%. |
| CEMS | Total mercury 10 hour | 10% | 60%. |
| CEMS | Multi-metal 10 hour | 10% | 60%. |
| | HCl | 10% | 60%. |
| | Chlorine | 10% | 60%. |
| | Max inlet temperature to dry PM APCD | 10° F | Limit −30° F. |
| Activated carbon injection | Min carbon injection feedrate (carbon feed through injector) | 5% | Limit +20%. |
| | Min carrier fluid flowrate or nozzle pressure drop | 20% | Limit +25%. |
| Dioxin inhibitor | Min inhibitor feedrate | 10% | 60%. |
| Catalytic oxidizer | Min flue gas temperature at entrance | 20° F | Limit +40° F. |
| | Max flue gas temperature at entrance | 20° F | Limit −40° F. |
| | Maximum waste feedrate | 10% | 60%. |
| | Min combustion chamber temperature (exit of each chamber) | 20° F | Limit +50° F. |
| Good combustion and APCD efficiency | Maximum flue gas flowrate or production rate | 10% | 60%. |
| Feed control | Maximum total metals feedrate (all streams) | 10% | 60%. |
| | Maximum pumpable liquid metals feedrate | | |
| | Maximum total ash feedrate (all streams) | 10% | 60%. |
| | Maximum total chlorine feedrate (all streams) | 10% | 60%. |
| Wet scrubber | Minimum pressure drop across scrubber | 0.5″ water | Limit +2″. |
| | Min liquid feed press | 20% | Limit +25%. |
| | Minimum liquid pH | 0.5 pH unit | Limit + 1 pH unit. |
| | Min blowdown (liquid flowrate) or max solid content in liquid | 5% | Limit +20%. |
| | Minimum liquid flow to gas flow ratio | 10% | Limit +30%. |
| Ionizing wet scrubber | Minimum pressure drop across scrubber | 0.5″ water | Limit +2″ water. |
| | Minimum liquid feed pressure | 20% | Limit +25%. |
| | Min blowdown (liquid flowrate) or max solid content in liquid | 5% | Limit +20%. |
| | Minimum liquid flow to gas flow ratio | 10% | Limit +30%. |
| | Min power input (kVA: current and voltage) | 5% | Limit +20%. |
| Dry scrubber | Min sorbent feedrate | 10% | Limit +30%. |

FLUCTUATION AND DATA COMPRESSION LIMITS EXPRESSED AS PERCENTAGES OF THE PERMIT/STANDARD LIMITS—Continued

| Device | Parameter | Fluctuation limit ± | Data compression limit |
|---|---|---|---|
| | Minimum carrier fluid flowrate or nozzle pressure drop | 10% | Limit +30%. |
| Fabric filter | Minimum pressure drop across device | 1″ water | Limit +2″ water. |
| ESP | Min power input (kVA: current and voltage) | 5% | Limit +20%. |

*V. Waste Minimization and Pollution Prevention*

A. Overview

Amendments to RCRA in 1984, and the Pollution Prevention Act of 1990 establish a clear national policy preference for pollution prevention and environmentally sound recycling as the nation's top priority environmental management methods, over treatment, storage and disposal. Pollution prevention, also referred to as source reduction, includes any practice that reduces the amount of pollutants entering a waste stream, prior to recycling, treatment or disposal. Waste minimization, a term particular to RCRA and EPA's hazardous waste program, includes pollution prevention (or source reduction) and environmentally sound recycling. Combustion for treatment or destruction is a form of treatment, and is not included in the definitions of pollution prevention, source reduction, waste minimization and/or environmentally sound recycling.

Based on previous studies, stringent limits on pollution control devices generally provide a strong incentive for companies to pursue less costly waste minimization measures to achieve compliance. The implementation of the Land Disposal Restrictions program has shown this to be the case in the RCRA program. Waste minimization measures can, in many cases, provide companies with a variety of benefits, including: improvements in production yields, reduced worker exposure, reduced waste volumes, reduced waste management costs, reduced liability, and reduced compliance burdens. As a result, many companies, including those affected by today's rulemaking, have made significant progress identifying and installing waste minimization measures that result in one or more of these benefits. In addition, hazardous waste generators that transport waste off-site for treatment, storage or disposal are required to certify on each hazardous waste manifest that they have a waste minimization program in place. In addition, facilities that have a RCRA permit to treat, store or dispose of hazardous wastes are required to certify annually that they have a waste minimization program in place (See sections 3002(b) and 3005(h) of RCRA).

Past studies indicate that existing regulations can also contain inherent barriers that prevent companies from identifying and installing additional waste minimization measures that could be cost effective and provide an alternative or supplemental means to achieve compliance. Potential regulatory impediments can include: Tight compliance deadlines that preclude taking extra time to explore waste minimization alternatives, perceptions that end-of-pipe technology is preferred by government agencies over less well known waste minimization measures to achieve compliance, a tendency to continue relying on pollution control technology once a company has sunk available capital into end-of-pipe controls, and a lack of government willingness to explore more flexible compliance approaches.

During extensive interaction with public stakeholders during the development of EPA's Hazardous Waste Minimization National Plan (released in 1994), some companies emphasized that short compliance deadlines after the promulgation of end-of-pipe standards are a significant impediment to fully identifying and installing waste minimization measures that could either replace or supplement end-of-pipe pollution control measures that may still be necessary. As a result, companies are likely to opt for installing ''end-of-pipe'' pollution controls to meet compliance deadlines, instead of pursuing waste minimization and pollution control measures as a compliance approach. At large complex manufacturing facilities (such as chemical manufacturing plants), short compliance deadlines are a particular barrier since completing a waste minimization options assessment requires consideration of chemical reaction redesign, testing and installation. In contrast end-of-pipe controls can often be installed more quickly than waste minimization process changes, even though they may be more expensive. In addition, once capital has been sunk into end-of-pipe pollution controls, there is little incentive for companies to then spend money exploring pollution prevention/waste minimization options that would offset the need for the end-of-pipe controls. This factor is one of the major factors to consider in today's rulemaking. This is discussed in more detail below.

B. EPA Proposed Flexible Waste Minimization Incentives

EPA was aware, in its April 1996 proposal for this rulemaking, that promulgating MACT standards may contain some inherent barriers to identifying and installing waste minimization technologies that could be more cost effective for meeting environmental protection standards (in some cases) than end-of-pipe air pollution control equipment alone. Consequently, EPA requested comment on three regulatory incentives that could partially offset potential barriers and provide regulated companies with an increased opportunity to identify and install waste minimization technologies that reduce or eliminate hazardous waste entering combustion feed streams as a cost effective approach to compliance. EPA's objective in this effort is to promote flexibility in the use of waste minimization measures that would reduce the amount and/or toxicity of hazardous wastes entering combustion feed streams, either as an alternative to end-of-pipe combustion measures, or in combination with combustion measures, to meet MACT standards.

EPA requested comment on two approaches that use waste minimization facility planning to identify cost effective waste minimization measures that reduce hazardous wastes entering combustion feed streams. Waste minimization planning has been used in over 20 states as a method to encourage companies, particularly those that generate and manage wastes on site, to identify cost effective waste minimization measures that can be used in place of, or in combination with, end-of-pipe pollution control measures. Of the 21 commercial incinerators and the 141 on-site hazardous waste incinerators facilities known to be covered by today's rule, 43–44 percent

of the facilities are in states that have mandatory waste minimization planning programs; 14 percent are in states that have voluntary waste minimization planning programs; and 42–43 percent are in states that do not have formal waste minimization planning programs.

The first waste minimization facility planning approach proposed for comment sought to encourage facilities to reduce the amount of hazardous waste entering combustion feed streams as much as possible through cost effective waste minimization measures. The proposal sought to accomplish this objective by requiring all facilities covered by this rulemaking to provide to the appropriate EPA or State permitting authority adequate information on waste minimization measures that would reduce hazardous wastes entering combustion feed streams. Requiring facilities to formally consider cost effective waste minimization options would raise the likelihood that hazardous waste generation could most cost effectively be reduced at the source or recycled, as a preferred approach to combustion. Since many of these facilities are located in states that have mandatory or voluntary waste minimization planning programs, EPA hoped to build on a process already in place. States that have mandatory waste minimization planning programs generally require facilities to provide a description of changes in process equipment, raw materials, materials handling, recycling, maintenance or other changes that would reduce the amount and/or toxicity of wastes that are treated or disposed. None of the existing mandatory or voluntary State waste minimization planning programs specifically address reductions of combusted hazardous as an objective of the planning process. EPA requested comments on this approach to determine if the approach could provide greater flexibility for facilities to build on requirements of existing state programs to achieve compliance with MACT standards.

In the second waste minimization planning option, EPA proposed to provide EPA Regions and States with the discretionary authority to make case by case determinations regarding which facilities would be required to provide information on waste minimization alternatives to reduce hazardous wastes entering combustion feed streams. This determination could take into account several factors, including, for example, whether an existing state program had already accomplished the equivalent of this objective, the extent to which this requirement may be too burdensome for some states, and the extent to which facility specific conditions indicate emissions could be best controlled by feed stream management and waste minimization at the source.

The third waste minimization incentive EPA proposed for comment allows facilities to apply for up to a one year extension to the three year compliance period allowed under the CAA and 40 CFR 63.6(i)(4)(i)(A) in cases where facilities need additional time to identify and install waste minimization measures that would reduce hazardous wastes entering combustion feed streams as a method (either alone or in combination with combustion or other treatment technology) to achieve compliance. 40 CFR 63.6(i)(6)(i) describes the requirements for requesting a compliance extension. A request must include a description of the pollution control, process changes or process equipment to be installed, a compliance schedule that describes the dates by which these controls, process changes and process equipment will be initiated, the dates by which installation will be completed, and the date by which compliance will be achieved. The Administrator or a State that has an approved Part 70 permit program or has been delegated the authority to implement and enforce the emission standard for that source may grant such extensions. This incentive would, at least in part, offset some of the time barriers large companies might need to fully explore and install waste minimization options in addition to any combustion equipment that may still be necessary.

C. Comments Received

EPA received comments on waste minimization from 22 commenters. Companies that operate on-site units (many of which are large chemical plants) commented that, while waste minimization can provide a cost effective approach to compliance, neither the three year compliance period allowed for this rule, nor the three years plus a one year extension is sufficient time to complete the two track task of designing, testing and installing waste minimization process changes that reduce hazardous wastes entering combustion feed streams, and designing and installing any combustion or other treatment equipment that may nevertheless be necessary. Waste minimization is an on-going process that should be continually under investigation in all companies. However, EPA agrees that in cases where standards are promulgated that change the economics of how much pollution can be emitted to the environment, even on-going waste minimization programs may not be able to anticipate the best combination of waste minimization and treatment measures to achieve compliance. EPA agrees that in some cases, particularly at large complex manufacturing operations, the three year compliance period may not be sufficient time to consider waste minimization measures, and in other cases, three years plus a one year extension may not provide sufficient time.

Commercial facilities continue to assert that they have few direct opportunities to pursue waste minimization since they have little control over the wastes generated by their customers. Some commercial companies believe EPA should implement ''good actor'' incentives for companies that educate their customers regarding available waste minimization resources. Such incentives could include reduced inspection frequencies, reduced performance testing, and a recognition program. EPA agrees that commercial combustors of hazardous waste have little direct control over the wastes generated by their customers and therefore will experience little if any flexibility from any the waste minimization incentives proposed for comment. The comment to implement good actor incentives as an incentive for commercial companies to educate their customers on waste minimization did not contain sufficient information to determine the merits of such an approach. EPA does point out, however, that this type of concept, i.e., one in which private industry proposes an improvement in environmental performance through and innovative regulatory approach, is the type of approach that might be appropriate for further exploration at a later time.

Three states commented. Two states believe EPA should encourage waste minimization in this rulemaking. However, they believe three years plus a one year extension may not be enough time for companies to identify and install waste minimization measures. The third state said that waste minimization incentives should not be necessary in this rule because companies have had many years to pursue waste minimization programs and should have already considered waste minimization as an approach to compliance. EPA agrees with the two states that, in some cases, three years plus a one year extension may not be sufficient time to identify and install waste minimization measures that achieve compliance. EPA agrees with the third state to a limited extent, in that companies have had many years to

implement waste minimization programs, and notes that most, if not all, of the companies affected by today's rulemaking probably have waste minimization programs in place. However, as noted earlier, waste minimization is an on-going process, and the stringent requirements of the MACT standards for hazardous waste burning facilities may shift the economics for particular companies in a way that makes certain waste minimization measures more cost effective than they otherwise would have been, and companies may need additional time to design and install these approaches.

EPA's Interim Final Guidance to Hazardous Waste Generators on the Elements of a Waste Minimization Program in Place (May 28,1993) recognizes companies make these determinations on a case by case basis. EPA's guidance describes six general program elements that contribute to successful corporate waste minimization programs. These elements include: (1) Top management support that emphasizes waste minimization in its corporate policy, employee involvement and rewards for ideas that reduce waste generation, setting goals for waste reduction, and other proactive management steps; (2) characterization of waste generation and waste management costs, identification of sources of waste in the production process, how they were generated, the value of raw materials and lost products that are escaping as waste, and the cost of replacing and managing wasted materials; (3) periodic waste minimization assessments that are tied into other efforts to improve environmental management; (4) a cost allocation system that assigns the true cost of generating and managing wastes to the activities that generate the waste in the first place; (5) encourage technology transfer that shares ideas and technology between parts of the organization and with other organizations where appropriate; and (6) program implementation and evaluation that evaluates successes and failures, and shares information with the public. While these principles were published in regard to RCRA's waste minimization certification requirement, the principles can be used as relevant guiding principles by companies who wish to consider using waste minimization measures as a method to reduce hazardous wastes entering combustion feed streams regulated under MACT standards and the Clean Air Act.

One company argues in its comments that mandatory waste minimization planning should be made a MACT requirement so that facilities are forced to consider source reduction and recycling alternatives, rather than simply installing end-of-the-pipe equipment to control HAP emissions. The company argues that this approach would be particularly useful in controlling combustion feed streams to limit the combustion of metals and other constituents that can not be adequately controlled using end-of-pipe measures.

EPA has examined this issue closely. While mandatory facility planning on the surface may appear to force facilities to consider waste minimization solutions, providing appropriate regulatory incentives and harnessing the power of public dialogue for companies to identify and install waste minimization measures will result in more waste minimization measures.

Sixteen states have implemented mandatory waste minimization planning programs and several more have implemented voluntary waste minimization planning programs in an effort to encourage facilities to pursue waste minimization measures over end-of-pipe measures. A Federal mandatory and prescriptively detailed waste minimization planning requirement would be, at best, marginally effective in causing large companies (which make up the population of facilities affected by today's regulation) to identify and install waste minimization measures beyond what they would do under current requirements. Large companies generally already have the necessary staff, information, and resources to pursue waste minimization alternatives where it makes sense to do so. Whether large companies choose waste minimization solutions over end-of-pipe solutions depends on a variety of economic and other factors that outweigh attempts to identify additional waste minimization alternatives. EPA hopes to encourage minimizing impediments to waste minimization by soliciting comments on the approaches contained in today's NODA. Furthermore, the remaining States have chosen to not implement mandatory or voluntary waste minimization planning programs. Some States believe that mandatory waste minimization planning does not improve waste minimization results. It would not be appropriate for EPA to either add additional burden to State waste minimization programs that already exist or to States that have chosen not to have waste minimization planning programs.

EPA is, instead, asking for comment on a refined approach that encourages facilities to consider waste minimization alternatives, uses public dialogue to advance waste minimization efforts, and provides regulatory incentives for companies to pursue waste minimization solutions. This approach will achieve many of the same ends more efficiently than a detailed and prescriptive mandatory waste minimization planning requirement.

D. Comments Requested on Additional Waste Minimization Incentives

EPA is requesting comment on a three regulatory incentives that are intended to encourage companies to pursue waste minimization measures to reduce or eliminate hazardous wastes entering combustion feed streams.

The first incentive was proposed in EPA's April 19, 1996 MACT proposal, and is being refined in today's NODA. EPA requested comments on granting regulated facilities the opportunity to request a one year extension to the three compliance period allowed under the Clean Air Act in cases where the additional time is clearly needed to identify and install waste minimization measures that would reduce the amount of hazardous waste combusted as a means of achieving compliance. In today's NODA, EPA is requesting comment on several clarifying factors that will promote consistency while still allowing flexibility in decision-making among the EPA Regions and authorized States who will make determinations on whether or not to grant one year extensions to facilities who apply.

EPA is also requesting comment on extending the agency's current audit and penalty policies to allow some companies to enter into a written consent agreement or consent orders (CA/COs) in cases where it is clear that longer than four years (i.e., longer than a one year extension) is needed to identify and install waste minimization measures that significantly reduce hazardous wastes entering combustion feed streams. These two approaches are discussed more below.

40 CFR 63.6(i) describes the authority, procedures and requirements for requesting a one year compliance extension for meeting MACT standards. Requests must include certain information, including: A description of the pollution control, process changes or process equipment to be installed, a compliance schedule that describes the dates by which these controls, process changes and process equipment, will be initiated, the dates by which installation will be completed, and the date by which compliance will be achieved. Today, EPA is requesting comment on language that clarifies the term ''process changes'' in 40 CFR 63.6(i)(6)(i)(B)

solely with respect to hazardous waste burning incinerators, LWAKs and cement kilns, to make it clear that waste minimization measures are included in the meaning of process changes for meeting MACT standards.

By making this clarification, EPA hopes to encourage the use of waste minimization measures to reduce the amount of hazardous waste entering combustion feed streams as an alternative to or supplement to end-of-pipe emission controls. With respect to hazardous waste burning incinerators, LWAKs and cement kilns, EPA includes in the definition of ''process changes'' the following activities: equipment or technology modifications, reformulation or redesign of products, substitution of raw materials, improvements in work practices, maintenance, inventory control, and environmentally sound recycling measures which reduce the amount and/or toxicity of hazardous waste entering feed streams of combustion devices. The term environmentally sound recycling includes on-site (including closed-loop recycling) and off-site recycling activities that use, reuse or reclaim hazardous materials in accordance with EPA regulations. Burning for energy recovery is not included in the meaning of ''process change'' as a basis for requesting a one year extension for waste minimization purposes. This proposed definition would apply only to hazardous waste burning incinerators, LWAKs and cement kilns.

The Administrator or a State that has an approved part 70 permit program (or has been delegated the authority to implement and enforce the emission standard for that source) may grant extensions under 40 CFR 63.6(i)(9). Under this approach, decisions to grant one year extensions will be made by EPA Regional offices and approved or delegated state programs. EPA recognizes that States employ a variety of approaches for requiring or encouraging the consideration of waste minimization measures in achieving compliance with regulatory requirements. It is not appropriate for EPA to supersede State approaches with a uniform set of criteria for evaluating waste minimization requests for one year compliance extensions. However, EPA believes it is appropriate to encourage (but not mandate) consistency in how these decisions are made. Therefore, EPA is requesting comment on a proposal to include four factors that must, at a minimum be considered by EPA Regional offices and approved or delegated state programs in approving or denying requests for one year compliance extensions for hazardous waste burning incinerators, LWAKs, and cement kilns). These factors include:

- The extent to which the process changes (including waste minimization measures) proposed as a basis for the extension reduce or eliminate hazardous wastes entering combustion feed streams and are technologically and economically feasible.
- Whether the magnitude of the reductions in hazardous wastes entering combustion feed streams through process changes are significant enough to warrant granting an extension.
- A clear demonstration that reductions of hazardous wastes entering combustion feed streams are not shifted as increases in pollutants emitted through other regulated media.
- A demonstration that the design and installation of process changes, which include waste minimization measures, and other measures that are necessary for compliance cannot otherwise be installed within the three year compliance period.

These factors will provide a degree of consistency, while still allowing flexibility among EPA Regional offices and approved States, in the use of this innovative regulatory approach. EPA will also provide separate guidance that provides examples of how to apply the factors to consider and additional information that will be helpful to government and regulated entities. For example, the guidance will provide examples that will help gauge whether the magnitude of proposed requests to reduce hazardous wastes entering combustion feed streams through process changes are significant enough to warrant granting an extension. For example, companies that commit to a 25% or greater reduction in hazardous wastes entering combustion feed streams may be more likely to be considered for an extension than companies that commits to only a five percent reduction.

EPA anticipates that the guidance will contain other examples on how to evaluate cases where a low percentage reduction may actually reflects a significant improvement relative to previous significant waste minimization achievements. The guidance will address how to evaluate shifts from combustion feed streams to other regulated media, such as wastewater effluents or other pollutant sources. EPA anticipates the guidance will address assuring that the proposed process changes that include waste minimization measures are critical path steps toward compliance, and not process improvements that have little to do with reductions of hazardous waste feed streams, and could otherwise have little impact on compliance. Waste minimization measures that are not on a critical path toward compliance or that do not have a direct impact on reducing or eliminating hazardous waste streams entering combustion feed streams are not good candidates for a one year extension. Finally, EPA anticipates the guidance will include a list of states that have approved part 70 permit programs, a list of states that operate waste minimization technical assistance programs, and a list of States that have mandatory or voluntary waste minimization planning programs.

EPA also points out that companies that choose to apply for a one year extension for waste minimization purposes may wish to coordinate the development of compliance extension applications with the development of ''public regulatory notifications of intent to comply,'' contained in today's rule, since much of the developmental work for the two actions should be nearly identical.

In the comments received, several companies and states said that, in some cases, even the three year compliance period plus a one year extension would not be adequate time to design, and install waste minimization measures or additional combustion or treatment measures necessary to ensure compliance with the MACT standards. It may be appropriate, under the circumstances described below, to grant facilities who demonstrate that longer than three years plus a one year extension is necessary to implement waste minimization measures that significantly reduce the amount and/or toxicity of hazardous waste entering combustion feed streams additional time (i.e., longer than four years). Reducing the amount of hazardous waste entering combustion feed streams provides greater long-term levels of protection for public health and the environment than other non-waste minimization/pollution prevention measures that could be used to comply with the MACT standard. Since facilities that need longer than three years or the three year date plus a one year extension to meet compliance are technically in violation (not including facilities that are granted a one year compliance extension and meet compliance within the one year extension period), EPA will require these facilities to enter into written consent agreements/consent orders (CA/COs) to receive this additional time. The process changes that include waste minimization measures must clearly demonstrate the facility will achieve significant reductions in the amount of

hazardous wastes entering combustion waste streams over what would have otherwise have been combusted over the long term using combustion-based compliance alternatives installed within the three year compliance period (or three years plus a one year compliance extension). EPA encourages facilities to consider undertaking longer-term waste minimization compliance approaches, subject to limitations proposed today. EPA will consider such requests using its enforcement discretion and the principles articulated in the Agency's ''Policy on Encouraging Self-Policing and Voluntary Correction'' (60 FR 66706, December 22, 1995) (i.e., the ''Audit Policy''). Within this context, EPA may, in certain cases, consider a reduction of penalties for facilities that are able to install compliance solutions that demonstrate significant reductions in hazardous wastes entering combustion feed streams, but need additional time beyond that allowable under the regulations.

To qualify for this special consideration for additional time, a regulated entity would have to submit a written request that contains the information listed below. Facilities must submit requests to the EPA Regional Office that has oversight for their facility within one year after the MACT standards for this rulemaking are promulgated. The request would include:

- An explanation of why the facility cannot reasonably implement their proposed process changes that include waste minimization measures within four years from the date of the promulgation of the MACT standards.
- An explanation of how the facility's proposed process changes (that include waste minimization measures) will achieve greater reductions in quantity and/or toxicity of hazardous wastes entering combustion feed streams. The proposed reductions must be significant. EPA will make these determinations on a case-by-case basis.
- An explanation of how the waste minimization/pollution prevention measures are necessary to achieve compliance with the MACT standards (i.e., waste minimization measures which reduce hazardous wastes entering combustion feedstreams must be shown to have a direct impact on the subsequent design, installation and testing of combustion or other treatment measures necessary to achieve and go beyond compliance standards), and a schedule for implementation of the proposal.
- A waste minimization facility plan. This plan must follow EPA's ''Pollution Prevention Facility Planning Guide'' (May, 1992; NTIS # PB92–213206), or, if the facility is located in a State that requires mandatory waste minimization planning, the form of waste minimization planning required by that State.

Regulated entities must demonstrate a clear intent to achieve compliance in a timely fashion by entering into a consent agreement/compliance order with EPA as soon as they exceed the allotted time provided by the regulations (including any regulatory extension). EPA would then exercise its enforcement discretion to treat a facility's failure to achieve compliance by the regulatory deadline as a violation that can receive penalty mitigation under the Agency's Audit Policy. Under the Audit Policy the Agency may give up to a 100% reduction in the gravity based component of potential penalties. To qualify for eliminating the gravity-based penalty a facility will have to show that it has a compliance management program that meets the criteria for due diligence under the Audit Policy. Otherwise, the facility may qualify for a 75% reduction of the gravity component of the penalty. EPA will provide examples of past cases in the supplemental guidance noted earlier in this section.

EPA realizes that some waste minimization compliance measures may be more cost effective than combustion based approaches. EPA will retain its discretion to recover any economic benefit gained as a result of noncompliance. This will ensure that facilities that delay compliance for a specific period of time do not receive an economic benefit during the period of non-compliance over regulated entities that do comply within the regulatory deadline. For example, EPA may recover the economic benefit a company receives by delaying capital expenditures for modifying their manufacturing process to meet the new compliance standards. EPA may exercise its discretion in appropriate circumstances to choose the lower figure between: (1) the company's pollution prevention/waste minimization expenditures, and (2) expenditures the company would have incurred implementing other methods to come into compliance, when calculating economic benefit during the period of non-compliance with the new regulatory standards. EPA will also use its enforcement discretion to waive recovery of insignificant amounts of any economic benefit resulting from a facility's delayed compliance.

EPA is also encouraging companies to pursue waste minimization measures in an expansion of the provision in the Clean Air Act regulations that requires facilities to submit an early notification that they intend to comply with the MACT standards as they become effective (usually about 2–3 years after the notification is submitted). The expansion, called a public regulatory notifications of intent to comply, would require facilities to include substantially more detail in this notification on: (1) What they have considered doing to meet the MACT standards (particularly with respect to waste minimization); and (2) how they have decided to proceed. This expanded notification would be sent not only to the regulatory agency, but would also be made available to the local community. In addition, the facility would be required to hold an informal meeting with the local citizenry to discuss the notification. However, regulatory agency review and approval of the notification is neither mandated nor expected. This approach would harness the power of public opinion to urge facilities to consider waste minimization alternatives to end-of-pipe ways of meeting the MACT standards. This approach is described in detail elsewhere in today's NODA for public comment.

EPA requests comment on the extent to which the proposed one year compliance extension, the proposed opportunity for companies to enter into consent agreements/consent orders for periods that extend beyond four years, and the PRNIC approach provide companies with appropriate incentives to pursue waste minimization measures to achieve compliance.

## *VI. Permit Requirements*

### A. Coordination of RCRA and CAA Permitting Processes

In the NPRM, EPA proposed to place the final MACT standards in 40 CFR Part 63 and reference those standards in 40 CFR Parts 264 and 266 (61 FR at 17451). Under this proposal the standards would only be written out in the CAA regulations, but they would legally be part of both the CAA and RCRA regulations. Thus, both programs would have an obligation to address the standards in permits issued under their authority. EPA proposed this approach to provide the maximum amount of flexibility for state permitting authorities to coordinate the issuance of permits and enforcement activities in a way which most effectively addresses their particular situation.

After reviewing the NPRM comments, there is some question on whether the proposed approach will provide the maximum amount of flexibility to the

state permitting authorities. The proposed approach would still require in most cases at least two different permitting authorities to review the air emission standards in a permit. Since under the original proposal the standards would be in both the RCRA and CAA regulations, permit writers from each program might be required to address them to some degree in a permit under that program, either by writing them directly in the permit or by referencing them from the other permit. The proposed approach might not have given states the flexibility to implement the new standards under a single regulatory program. Thus, the proposed approach would result in duplicative permitting actions in many cases.

Commenters had several other concerns with an approach where the air emission standards are incorporated into two permits. One major problem described by commenters is that the overlapping permit conditions of the Title V and RCRA permits would be subject to two separate permit modification procedures, administrative appeals procedures, and potentially separate judicial procedures as well. The Agency now believes that this outcome could be needlessly duplicative and unwieldy, and therefore not consistent with the Agency's intent to simplify permitting.

Additionally, commenters were concerned that the proposed approach would have allowed for dual enforcement scenarios where enforcement actions under both statutes would be brought against the facility for a single violation. In the NPRM, EPA stated that the Agency did not expect to enforce under both permits (61 FR at 17452). However, commenters noted that this statement did not restrain the states from initiating dual enforcement actions, or citizens from initiating dual citizen suits.

Codifying the MACT standards in only one place in the regulations (unlike the proposed scheme) may actually provide states the greatest flexibility in the way they issue permits and prevent duplication of effort. Although the standards would be codified under one statute, states could decide which program they want implementing the standards. A state would be free to decide, for example, to have its RCRA staff implement a set of CAA standards. Another approach would be for a state to decide under which state statute to adopt the MACT standards based on which part of their program they wish to implement the standards. For example if EPA places the MACT standards in part 63 only (see below), a state could still decide to adopt those standards under their state solid waste statute and implement the standards through their RCRA hazardous waste program, depending on how their state solid waste statute is written. The basic premise in this approach is that it is not significant to EPA, nor to proper implementation of RCRA or CAA, under what statute a state adopts a RCRA or CAA regulation.

EPA particularly would like to take comment on this issue. Do states believe they can decide under which program to implement the MACT standards if they are only placed in Part 63? EPA is concerned that states be allowed to implement the standards through either their CAA or their RCRA program, whichever works best for their particular situation.

Currently, EPA is considering placing the MACT standards only in 40 CFR part 63 and relying on the air program implementation scheme, including the Title V permitting program, to bring facilities into compliance with the new standards. This approach (as opposed to the converse—placing the standards only in the RCRA regulations) is the only approach that appears feasible to allow the standards to be codified in only one place in the regulations. The Agency would rely on the integration provision of RCRA section 1006(b)(1) to defer RCRA controls on these air emissions to the part 63 MACT standards. (The CAA does not have a similar integration provision which would allow deferral of CAA requirements to RCRA regulations.)

We emphasize, however, that under this approach, there would still be a need for a RCRA permit at HWC facilities, to address any other RCRA units on site, and to address RCRA regulations which apply to all types of RCRA facilities and which are not duplicated under CAA. For example, a permit will be required to address hazardous waste storage units that hold the waste prior to combustion. As with all RCRA permits, the permit would require compliance with the standards in 40 CFR part 264 (including general facility standards, preparedness and prevention requirements, contingency planning and emergency procedure requirements, manifesting requirements, recordkeeping and reporting requirements, releases from solid waste management units requirements, closure and post-closure requirements, financial requirements, corrective action requirements, storage requirements, materials handling requirements, and air emissions standards for process vents, equipment leaks, tanks, and containers). The omnibus provision of RCRA Section 3005(c)(3), codified at § 270.32(b)(2), which provides for additional permit conditions as necessary at a particular site to protect human health and the environment, would also need to be addressed in the RCRA permit, with respect to the combustor and other activities at the facility. (This issue is discussed further in the next section.) Among other consequences, this means that the current program of processing RCRA HWC permits will continue until EPA finalizes any program changes. It remains a high priority to bring all HWC under full Part B permits as soon as possible.

Although the RCRA permit would not need to duplicate the MACT controls contained in a Title V permit, there will typically be a number of waste management activities associated with the combustion unit that would need to be addressed in the RCRA permit (and not the Title V permit), such as materials handling (feed and residues) and combustor-specific (but not MACT-related) waste analysis requirements and feed restrictions. If, as under the original proposal, the Agency decides to retain the DRE standard in the RCRA regulations, then DRE would also need to be addressed in the RCRA permit.

The discussion above describes one approach the Agency is considering for the final rule. If this approach were adopted, it would establish how EPA would implement the new MACT standards where the Agency has permitting jurisdiction. However, in many cases, states are delegated RCRA and CAA authority. It would therefore be up to the state program to decide how best to implement the MACT standards given the particular authorities of the state. The approach described today may be better suited to provide greater flexibility for state approaches, whether the State prefers to rely primarily on the MACT and Title V permit process or the RCRA permit process to impose the new standards.

The Agency recognizes that in many cases facilities will already have a RCRA permit in place when the MACT standards become effective. This situation raises the question of what happens to RCRA permit conditions related to combustor air emissions.

From an overall standpoint, it is expected that the MACT standards will be more stringent than many current RCRA regulations and permit conditions. However, at some individual sites, certain RCRA permit conditions may be more stringent than the corresponding MACT emissions standards. Some potential reasons why such a situation would occur are because the RCRA permit condition is

based on a site-specific risk evaluation under the BIF rule or the omnibus provision; because the MACT standard is in a different format than the permit condition (e.g., a mass emission rate or removal efficiency format in a RCRA permit vs. a concentration-based standard for HCl under MACT) and at that particular site the RCRA format yields more stringent control; because, in the case of CO limits in early incinerator permits, the RCRA permit limit was based on levels during the trial burn; or because the facility was one of the lower emitters in the standards development MACT pool.

The Agency's overall intent is for the MACT standards to replace the RCRA air emissions standards for hazardous waste combustors. Therefore, where the Agency has permitting jurisdiction, the RCRA air emissions permit limits for HWCs, with the exception of site-specific risk-based limits, would be deleted from RCRA permits when the MACT standards become operational. In the case of site-specific risk-based limits, based either on the BIF metals and HCl/Cl2 requirements or omnibus authority, these limits would remain in RCRA permits to satisfy the protectiveness requirement of RCRA section 3004 (a) and (q). As with EPA issued permits, in authorized states any site-specific risk-based limits would need to be retained where necessary to satisfy RCRA protectiveness requirements. Since authorized states are allowed to be more stringent, states will determine, in the process of deciding whether to delete old RCRA-based regulations and in the permitting process, whether to keep or delete more stringent permit conditions which are not based on a site-specific risk finding.

EPA would like to take comment on the approach of placing the MACT standards only in the part 63 regulations, and deferring the RCRA standards, as described above.

B. Permit Process Issues

As discussed above, the Agency is considering an approach of placing the MACT standards only in 40 CFR part 63 and using RCRA 1006(b) authority to defer RCRA permitting to the Title V permitting program for the air emission standards only. This approach raises the issues of how and when the permitting authorities should modify existing RCRA permits to remove the air emission standards. The Agency's current thinking is that the RCRA permit should continue to apply until a facility completes its comprehensive performance testing and its Title V permit is issued (or its existing Title V permit is modified to include the MACT standards). The RCRA permit would then be modified to remove the air emission limitations which are covered in the Title V permit. Another option is to modify the RCRA permit at the time the facility submits their comprehensive performance test results. However, it is beneficial to wait until the test results are reviewed, approved, and written into a Title V permit before deleting any RCRA permit conditions because of the greater level of Agency and public review that occurs during the permit process. The Agency would like to take comment on this issue. At what point should the RCRA permit be modified to remove air emission standards? How should the switch-over to the new permitting system occur? Note that irrespective of when the Title V permit is issued/modified, the MACT standards and associated operating limits become enforceable according to the schedule in the final rule.

After the compliance date for the final rule, but before the RCRA permit is modified to remove any air emission limitations, there will be a period where a facility will have both a RCRA permit that addresses air emissions and either: (1) A precertification of compliance document with applicable operating conditions that they have submitted; or (2) a Title V permit which also addresses air emissions. Note, the RCRA permit will continue to apply until such time that it is modified to remove any air emission limitations. The precertification of compliance document or Title V permit will not automatically supersede RCRA permit conditions as a matter of law. The more stringent conditions will govern.

C. Omnibus and RCRA/CAA Testing Coordination

As discussed in the preamble to the proposed rule (61 FR at 17371), EPA currently has a national RCRA policy of strongly recommending to all federal and state RCRA permit writers that, under the omnibus provision of RCRA section 3005(c)(3), site-specific risk assessments (SSRAs) generally be performed as part of the RCRA permitting process to determine whether additional conditions are necessary to protect human health and the environment. The results of these risk assessments are then used to set protective permit conditions. Under the new permitting scheme that the Agency is considering (placing the MACT standards only in 40 CFR part 63), the Agency is considering when the RCRA omnibus provision would continue to be used—for example, to require a site-specific risk assessment—and the timing of the RCRA omnibus finding in relation to the Title V permit issuance/modification.

As discussed in the NPRM, the Agency has indicated a preference for modifying our current policy of recommending that a site-specific risk assessment (SSRA) be performed during permitting at hazardous waste combustors in most cases (61 FR at 17372). Depending on the scope and level of the final MACT standards, this policy may need to be re-evaluated. For at least some facilities, there might still be sufficient cause to perform a SSRA under the RCRA omnibus permitting authority.

Thus, the Agency is also considering the timing issue of whether a RCRA omnibus finding would be expected to occur at the same time as the Title V permitting decision (or the Title V permitting modification decision, if this is more appropriate, since some of these units will most likely already have Title V permits). The Agency expects that many of the trial burns to support SSRAs will already be completed prior to the effective date of the MACT rule, and would not need to be repeated provided none of the resulting emissions limitations are relaxed based on the MACT rule. For facilities where trial burns for risk assessments have not been performed, a RCRA omnibus determination as to whether a SSRA is needed can be made in most cases before the comprehensive test protocol is finalized. This situation would allow the MACT comprehensive test protocol and RCRA trial burn plan to be coordinated with respect to sampling and analysis procedures and operational protocols. However, the Agency does not plan to hold up comprehensive performance test approval or the Title V permit process (modified or new permits) to accommodate a RCRA omnibus finding.

If it were not possible to make the RCRA omnibus determination in sufficient time to allow coordinated emissions testing, then a separate RCRA trial burn might be necessary. This separate test event would increase the costs to the facility and require more oversight by the permitting authority. After allowing for additional time to perform a SSRA, the findings of the risk assessment could then be used to establish site-specific standards which, in turn, might require a review of the Title V permit and its associated operating limits/standards.

It should also be noted that if the DRE standard is retained under RCRA (see discussion in Section III.A.), these same testing coordination issues apply to DRE testing. (At sites where SSRAs are to be performed, it is expected that DRE

testing and testing necessary to provide data for SSRAs will be occurring at the same time.)

We invite comment on the workability of this approach for achieving maximal coordination of the RCRA trial burns and omnibus findings with the initial MACT comprehensive test and Title V permitting.

**Part Four: Miscellaneous Issues**

*I. 5000 Btu per Pound Policy for Kiln Products*

Current Agency policy exempts cement product (clinker) from cement kilns burning hazardous waste from regulation as a hazardous waste provided the fuel value of the hazardous waste exceeds 5000 Btu per pound [68]. This allows cement kilns to burn high-Btu hazardous waste for energy recovery purposes and still market the clinker and the cement mix produced from the clinker as commercial product free from any Subtitle C concerns. The Agency has already provided a clarification (53 FR 31198, August 17, 1988) that the regulations for ''waste derived products'' at § 266.20 do not apply to products from processes using hazardous waste (HW) fuels, unless these processes also use hazardous wastes as ''ingredients'' in a product destined for land application (i.e., the product must ''contain'' the HW as an ingredient to be covered by § 266.20) or burn hazardous waste for destruction. To implement this regulation, the Agency has used Btu values of a waste as a proxy to determine whether contaminants in the HW fuels will or will not be deemed to transfer to the product (i.e., become ingredients). Over time, many commenters have submitted data and have suggested that the heat content of a waste is an indirect and imprecise way of identifying whether materials should be subject to the provisions of § 266.20 (hazardous wastes used in a manner constituting disposal).

The Agency has been interested for some time in considering whether and how to change the existing Btu approach. For example, 60 FR 7376 (February 7, 1995) discusses a possible exclusion of clinker from the derived-from rule, even when cement kiln dust is introduced in the feed. EPA has also discussed with CKRC the narrower issue of whether the 5000 Btu/lb energy value level reliably predicts whether toxic contaminants would more likely partition to the clinker and ultimately the cement product. Some from industry have suggested that a facility that agrees to limit waste feed metals to their ''historic average'' could be exempted from the 5000 Btu/hr policy. The rationale is that even if the facility took lower Btu waste, they would not be taking higher quantities of metal waste than currently, at least on the average. This would address EPA's concern about allowing an increase of metals in HW fuels burned by cement kilns if the 5000 Btu restriction were abandoned.

Today, without our endorsement at this time, the Agency is offering this concept and some potential variations for public comment. The Agency is interested in the possible ramifications and requests comment, particularly with respect to limiting the concentrations of metals in cement products from cement kilns burning hazardous waste. To take advantage of such a policy, a facility would have to establish a baseline of metals feed in the hazardous waste (for example, the average of the previous three years) and then agree to enforceable permit conditions limiting metals feedrate levels to that average plus one standard deviation. Presumably, enforceable restrictions on metal feed rates should control metal partitioning to clinker and CKD much more effectively than would the Btu limit and ensure that these materials would not contain an increase in toxic metal constituents from the hazardous waste used as fuel. Also, metal feed limits based on a historical average would appear to be more stringent than the current BIF metal feed limits, which are set on a health basis considering direct inhalation of metals emissions. (In other words, as discussed in earlier sections of this notice, cement kilns are generally feeding metals far below allowable BIF limits.)

EPA seeks comment on allowing cement kilns (and LWAKs) the option of complying with the following, which is only partly based on the suggestions discussed with cement kiln representatives, with some additions:

- An owner or operator of a cement kiln burning hazardous waste would be allowed to burn hazardous waste with any Btu content, provided the owner or operator agrees to enforceable hazardous waste feed operating limits on metals of concern (see below);
- These metals feed limits would be set at levels that would ensure, at least on an annual basis, that metals on a mass basis do not increase over current levels, which are substantially less than those allowable under BIF (and sources would, of course, remain subject to stack emission standards to control the emission of metal HAPs);
- Feed limits would have to be established for each of the following twelve metals: antimony, arsenic, barium, beryllium, cadmium, chromium, cobalt, lead, nickel, selenium, thallium, and vanadium;
- Sampling and analysis would be conducted as often as necessary to document that the metals levels are below the limits and included in the facility's waste analysis plan required by 40 CFR 264.13; and
- Results of the analysis would have to be available for public inspection.

Also, the Agency is considering a variation of this option, under which kiln operators would have to achieve specified percentage reductions of the total quantity (on an aggregate basis) of the following metals in their wastes combusted: antimony, arsenic, barium, beryllium, cadmium, chromium, cobalt, lead, nickel, selenium, thallium, and vanadium. EPA chose these particular metals based on their potentially high human health and ecological risk in conjunction with their significant tendencies to persist in the environment and accumulate in living tissue. If generators reduce metals in wastes over time, holding kilns to the average of the past three years may actually allow increased burning of certain metal-bearing streams. This is because other streams may contain less metals. In contrast, commitments to reducing metals below baseline limits would ensure that progress continues in waste minimization. EPA requests comments on this option, including information about: (1) The prevalence and distribution throughout industry sectors of waste streams bearing these metals sent to combustion, and (2) opportunities for generators to reduce these metals in wastes sent to combustion by means of source reduction during generation.

EPA requests comment on the impact of imposing limits on metals concentration on waste streams combusted in cement kilns. EPA raises these questions:

- How much hazardous waste now sent to cement kilns for energy recovery would be likely to meet such metal level limitations?
- Of the fraction of wastes that would ''fail'' a metals limit, would generators of waste now sent to cement kilns reduce metals concentrations in these wastes, using waste minimization and pollution prevention, so that cement

[68] Wastes with energy value greater than 5000 Btu may generally be said to be burned for energy recovery, since this is the Btu value of low grade fuels. 48 FR 11157–59 (March 16, 1983). However, lower energy wastes could conceivably be burned for energy recovery in industrial furnaces, such as cement kilns, or in industrial boilers due to these devices' general efficiency of combustion. Id. At 11158. Thus, the 5000 Btu level is not an absolute measure of burning for energy recovery (i.e., a rule), particularly when industrial furnaces and industrial boilers are involved.

kilns would continue to receive the same amounts of waste?

• If no such action to reduce metals concentrations occurred, would cement kilns reject high-metals hazardous wastes now sent to cement kilns for energy recovery and would these wastes go instead to incinerators?

The Agency also requests comment on the related issue of appropriate metals reduction goals. EPA has identified a national goal for waste minimization of the most persistent, bioaccumulative and toxic hazardous constituents by 25 percent by the year 2000 and by 50 percent by the year 2005. See EPA's Waste Minimization National Plan (Office of Solid Waste, November 1994). Consistent with this national waste reduction goal for metals, EPA requests public comments today on requiring *aggregate percentage reductions* for the twelve metals in waste feed, as an alternative to holding cement kilns to the historical average feed limits of the past three years and allowing no increases over baseline limits. This approach would also further waste minimization planning by offering kilns a reason to motivate the generators supplying them with hazardous waste for combustion to undertake waste minimization. In comments related to the role of waste minimization in the MACT proposal, Molten Metal Technologies (MMT) states that ''without drivers favoring pollution prevention and waste minimization in the instant rulemaking, only minimal progress will be made.'' MMT points out that economics conspire against pollution prevention and waste minimization since investment for compliance often takes priority over investment for process modifications to reduce waste generation and since corporate rate-of-return thresholds may ''squash'' pollution prevention and waste minimization initiatives.

Finally, the Agency requests comment on whether additional nonmetal constituents (e.g., chlorinated organics) should also be identified for similar reductions as part of this approach.

*II. Foundry Sand Thermal Reclamation Units*

A. Background

Foundry operations can generally be classified as either ferrous or nonferrous, depending on their primary feed materials. Both types of foundries use large amounts of sands for their metal molds. Over time, the sands become contaminated with the metals being used, as well as with certain binder materials. Nonferrous foundries (i.e., brass, lead, etc.) sometimes generate spent sands that exhibit the Toxicity Characteristic (40 CFR 261.24) for lead or cadmium. (The Agency has indicated concerns with certain sand treatment methods. See 62 FR 10004, March 5, 1997.) These sands can be physically processed to remove contaminants for continued use, resulting in less sand use for the foundry, and less need for disposal of the sands. Interest has also been expressed in using thermal processing or reclamation units (TRUs) to clean the sand for continued use. TRUs may represent a significant waste minimization technology for the foundry industry.

The TRUs remove contaminants primarily by combusting the organic binder materials in the sand. These organic materials are generally wax-like materials, synthetic or natural (e.g., clays, phenols, etc.). Air emissions concerns would include lead, cadmium, and particulate emissions, as well as products of incomplete combustion. These units are identified as industrial furnaces under 40 CFR 260.10 as a type of ''foundry furnace'' and are subject to regulation under 40 CFR part 266, subpart E (the ''BIF rules'') when they burn hazardous waste.[69] When the Agency developed subpart E, however, we did not consider whether TRUs would be appropriately controlled under those standards. The Agency created a special exemption for metal recovery furnaces under § 266.100(c) and also proposed a special exemption for petroleum catalyst recovery units (see 60 FR 57780; November 20, 1995). In these two cases, we found that the BIF rules would not appropriately control the units in question, i.e., any air emissions hazards might be more appropriately controlled under standards specially designed for those units under either RCRA or CAA. Under RCRA Section 1006, an important consideration for the Agency is to avoid duplication to the extent practical between the two Acts. Also, as noted above, TRUs may achieve significant waste minimization benefits, an important consideration under RCRA.

[69] Another potential reading of the Section 260.10 definition is that ''foundry furnaces'' only applies to a furnace that burns a primarily metal-bearing material. Under this reading, TRUs could not be industrial furnaces because they burn sand with only contaminant levels of metals. However, since TRUs are closely associated, both physically and functionally, with the primary metal processing functions of a foundry, they are appropriately classified as industrial furnaces subject to part 266, subpart E.

B. Deferral and Variance Options for Consideration

The Agency is presently developing MACT controls under the CAA for foundries. Although at this time it is not clear to what extent TRUs would be subject to MACT controls, representatives from the foundry industry have suggested that, as the new MACT rules are implemented, all foundries with TRUs will be required, as a practical matter, to install MACT controls on the TRUs. Among the reasons cited are that vendors of TRU technology will have to design for situations under MACT control, and state air officials will incorporate the MACT technology in permits for foundries as a matter of course.

Although EPA has no way to predict whether this scenario would come to pass, there are obvious advantages to controlling TRUs processing sands that exhibit the TC under MACT standards, as opposed to under the BIF rules. These advantages include administrative simplicity and maximum flexibility for implementing agencies. EPA requests comment on the following two approaches to ensure appropriate controls for TRUs:

1. *Deferral option*. Given the developments under the CAA discussed above, and also in light of the potential waste minimization benefits, EPA requests comments on appropriate control schemes for TRUs burning hazardous foundry sands. Specifically, comments are requested on a deferral of BIF applicability, similar to the existing provision for metal recovery furnaces and proposed provision for petroleum catalyst recovery units. This would allow development of the foundry MACT, and potentially the eventual application of these controls to TRUs processing sands that exhibit the TC. Under such an approach, EPA would place an exemption in Part 266, Subpart E, identifying foundry TRUs as an exempt BIF, and a one-time notice would be required as is now required for metal recovery furnaces under § 266.100(c)(1)(I).

2. *Variance from definition of solid waste option*. TRUs appear to be integral to foundry operations. They are located at the foundry site, operated by the foundry, and the sand being processed and returned to the foundry operation is essential in the manufacturing operation. The time periods between when a spent sand is generated and when it is processed and returned is typically a matter of hours. In fact, TRUs may reduce the need to store spent sands for processing and may thereby reduce fugitive emissions of the sands

that might result from physical processing. Given that a sand appears integral to foundry operations and TRUs can greatly improve the efficiency of sand use, EPA could conclude that even without any rule changes, foundry operators may be eligible for a variance from the RCRA definition of solid waste under the variance provisions found at 40 CFR 260.30(b), 260.31(b), and 260.33.

Under these variance provisions, EPA (or an authorized State) may grant a variance from the definition of solid waste for materials that are reclaimed and then used as feedstock within the original production process in which the materials were generated if the reclamation process is an essential part of the production process. This evaluation is guided by a number of criteria found at § 260.31(b). While foundries certainly can and do operate without thermally processing their sands, and so TRUs are not literally ''essential'', as summarized above the units do in fact greatly increase efficiency of sand use, which is an essential raw material of foundry operations. Also, the TRUs are physically proximate, and integrated into the foundry's operations. Emissions from the TRUs are often ducted into emission control devices used for the foundries' main production activities. As such, the Agency could view sands being processed in TRUs as potentially eligible for the variance under 260.31(b)[70]. EPA (or the State) would still have to weigh the factors in paragraph (b) on a case-by-case basis to determine if the variance should be granted. For example, paragraph (b)(3) requires an examination of how the sands are handled to ensure that losses are minimized before reclamation. Also, paragraph (b)(8) allows consideration of ''other factors'' as appropriate, and in this case, air emissions controls for the TRU would be appropriately considered before granting a variance. As discussed above, controls may be installed as part of the MACT process, or simply due to state or local air pollution laws. The Agency would expect that as a minimum, emissions of particulate matter would have to be limited to control lead emissions, and given the organic binder compounds being introduced to the units, limits on and continuous monitoring of indicators of efficient combustion, such as CO and/or HC, would seem appropriate. Under this approach, the Agency might or might not develop special standards for TRUs under RCRA or the CAA. The case-by-case approach might enable EPA and the States to oversee the units without the need for federal standards.

*III. Status of Gaseous Fuels Generated From Hazardous Waste Management Activities*

The proposed rule included a proposed exclusion from subtitle C jurisdiction for certain synthetic gas fuels derived from hazardous waste treatment activities (61 FR at 17465). Some commenters stated that synthesis gas fuels are beyond EPA's regulatory authority because they are uncontained gases, and further stated that EPA had failed to set out any explanation for its potential jurisdiction over these synthesis gas fuels (which jurisdiction EPA proposed to relinquish provided the syngas met designated specifications).

The type of syngas discussed in the proposal results from thermal reaction of hazardous wastes, which reaction is optimized to break organic bonds and reformulate the organics into hydrogen gas and carbon monoxide. *Id.* This resulting gas can be used as a fuel at manufacturing facilities.

EPA has broad statutory authority to regulate fuels produced from hazardous wastes. RCRA section 3004(q)(1); see also *Horsehead Resource Development Co.* v. *Browner,* 16 F. 3d 1246, 1262 (D.C. Cir. 1994) (broadly construing this authority). The fact that syngas (by definition) is a gas, rather than a solid or liquid, does not appear to raise jurisdictional issues. It is still produced from the hazardous wastes that are being processed thermally. See § 261.2(c)(2)(A) and (B) (defining such materials as solid wastes). EPA believes its authority to be clear under these provisions, but will consider further comment on the issue.[71]

*IV. Regulatory Flexibility Analysis*

The Regulatory Flexibility Act (RFA) of 1980 requires Federal agencies to consider impacts on ''small entities'' throughout the regulatory process. Section 603 of the RFA calls for an initial screening analysis to be performed to determine whether small entities will be adversely affected by the regulation. If affected small entities are identified, regulatory alternatives must be considered to mitigate the potential impacts. Small entities, as described in the Act, are only those ''businesses, organizations and governmental jurisdictions subject to regulation.''

In preparation of the proposed rule, EPA used information from Dunn & Bradstreet, the American Business Directory and other sources to identify small businesses. Based on the number of employees and annual sales information, EPA identified 13 firms which may be small entities. That analysis also determined that the proposed rule was unlikely to result in detrimental impacts to small businesses. This conclusion was derived from two important findings:

First, few combustion units are owned by businesses that meet the SBA definition. Among those that are considered small (based on number of employees), over one-third were found to have gross sales in excess of $50 million per year. Furthermore, available data indicate an ongoing industry trend toward consolidation, or market exit.

Second, small entities impacted by the rule, were found to be those that currently burn very little hazardous waste, and hence face very high cost per ton burned. These on-site facilities are likely to discontinue burning hazardous waste and dispose off-site, rather than comply with the proposed rule. Based on available data, EPA found that the incremental cost of alternative disposal associated with discontinued burning of such waste would not exceed 0.10 to 0.20 percent of annual corporate gross revenues. Furthermore, currently viable commercial small business facilities affected by the proposal were found to remain profitable.

[70] The Agency notes that, typically, a variance from the definition of solid waste under 260.31(b) would apply at the point of generation (e.g., in this case, the point where the spent sands are removed from the casting forms). Also, typically, when such a variance is granted, the variance is only applicable to those secondary materials that meet the conditions of the variance (e.g., the variance would not include secondary materials that are not reused in the production process).

The normal and efficient flow of materials at facilities with a TRU may involve the processing of all of the spent sand generated. However, after recovery of the sand, insubstantial amounts of sands that are processed by the TRU may be found to be unusable again as foundry sand, and so may be discarded. While treatment and disposal of the spent foundry sand is clearly not the intent of the TRU, ''treatment and disposal'' would be the regulatory status of any hazardous secondary material that is processed such that it is no longer hazardous and then discarded, given the most straightforward reading of the regulations.

Nevertheless, the Agency believes that because the TRU is typically integrated into the facility's operations, and the flow of spent foundry sand into the TRU becomes a standard operating procedure, the incidental discard of an insubstantial amount of spent foundry sand should not overshadow the basic purpose of § 260.31(b) to grant a variance from the definition of solid waste to materials that are reclaimed and reused in the production process, where such reclamation is, in effect, an integral step in the flow of production. Thus, the Agency asserts that, assuming all other conditions of the § 260.31(b) variance are met, the fact that a relatively insignificant amount of spent foundry sand is discarded would not negate a variance granted to spent foundry sand, or require a treatment permit for the TRU.

[71] See also 50 FR 49164, 49171 (Nov. 25, 1985); 52 FR 16982, 17021 (May 6, 1987); and 56 FR 7134, 7203–04 (Feb. 21, 1991) which discuss this question, although inconclusively.

The above findings indicate that the proposed rule is expected to have overall negligible impacts on small entities. The Agency is currently refining and expanding its analysis of small entities and makes no conclusions beyond those presented for the Proposal.

Dated: April 22, 1997.

**Elizabeth Cotsworth,**

*Acting Director, Office of Solid Waste.*

[FR Doc. 97–11155 Filed 5–1–97; 8:45 am]

BILLING CODE 6560–50–P

federal register

Friday
May 2, 1997

## Part IV

# Office of Personnel Management

**Proposed Demonstration Project; Alternative Personnel Management System for the U.S. Department of Commerce; Notice**

## OFFICE OF PERSONNEL MANAGEMENT

### Proposed Demonstration Project; Alternative Personnel Management System for the U.S. Department of Commerce

**AGENCY:** Office of Personnel Management.

**ACTION:** Notice of a proposed demonstration project plan.

**SUMMARY:** Title VI of the Civil Service Reform Act, now codified in 5 U.S.C. Chapter 47, authorizes the Office of Personnel Management (OPM) to conduct demonstration projects that experiment with new and different human resources management concepts to determine whether changes in human resources policy or procedures result in improved Federal human resources management. This demonstration project is designed to replicate many of the features of the National Institute of Standards and Technology (NIST) demonstration project created by Congress pursuant to the National Bureau of Standards Authorization Act for Fiscal Year 1987 (Pub. L. 99–574). This project will cover portions of five Department of Commerce organizations:

(1) Office of the Secretary
—Office of the Chief Financial Officer and Assistant Secretary for Administration
—Office of the General Counsel
(2) Technology Administration
—Office of the Under Secretary
—Office of Technology Policy
(3) Economics and Statistics Administration
—Bureau of Economic Analysis
(4) National Telecommunications and Information Administration
—Institute for Telecommunications Sciences
(5) National Oceanic and Atmospheric Administration
—Portions of the Office of Oceanic and Atmospheric Research
—Portions of the National Environmental Satellite, Data, and Information Service
—Portions of the National Marine Fisheries Service.

**DATES:** To be considered, written comments must be submitted on or before July 10, 1997. Public hearings have been scheduled as follows:

1. Monday, June 9, 1997, 2:00 p.m., in Washington, DC.
2. Monday, June 16, 1997, 10:00 a.m., in Boulder, Colorado.
3. Tuesday, June 17, 1997, 10:00 a.m., in Portland, Oregon.
4. Wednesday, June 18, 1997, 10:00 a.m., in Juneau, Alaska.
5. Thursday, June 26, 1997, 10:00 a.m., in Asheville, North Carolina.

At the time of the hearings, interested persons or organizations may present their written or oral comments on the proposed demonstration project. The hearings will be informal. However, anyone wishing to testify should contact the person listed under **FOR FURTHER INFORMATION CONTACT,** and state the hearing location, so that OPM can plan the hearings and provide sufficient time for all interested persons and organizations to be heard. Priority will be given to those on the schedule, with others speaking in any remaining available time. Each speaker's presentation will be limited to ten minutes. Written comments may be submitted to supplement oral testimony during the public comment period.

**ADDRESSES:** Comments may be mailed to Judith B. White, U.S. Office of Personnel Management, 1900 E Street, NW., Room 7460, Washington, DC 20415; public hearings will be held at the following locations:

1. Washington—Herbert C. Hoover Building Auditorium, 14th & C Streets, NW., Washington, DC 20230;
2. Boulder—Research Laboratory Building #3, 3100 Marine Street, Room 620, Boulder, Colorado;
3. Portland—Portland Convention Center, 300 Northeast Multnomah Street, Portland, Oregon 97233;
4. Juneau—709 West 9th Street, Room 45C, Juneau, Alaska 99802; and
5. Asheville—Veech-Bailey Federal Complex, 151 Patton Avenue, Room 5000, Asheville, North Carolina 28801.

**FOR FURTHER INFORMATION CONTACT:** (1) On the proposed demonstration project: Darlene F. Haywood at the U.S. Department of Commerce, 1400 Constitution Avenue, NW., Room 5004. Washington, DC 20230, 202–482–3620; (2) On the proposed demonstration project and public hearings: Judith B. White, U.S. Office of Personnel Management, 1900 E Street, NW., Room 7460, Washington, DC 20415, 202–606–1526.

**SUPPLEMENTARY INFORMATION:** The goals of this demonstration project are to improve workforce performance and promote mission accomplishment by improving the quality of new hires, motivating supervisors and employees, retaining good performers, making line managers more responsible and accountable for human resources management, and improving the effectiveness and efficiency of human resources systems.

**James B. King,**

*Director.*

**Table of Contents**

I. Executive Summary
II. Introduction
A. Purpose
B. Problems with the Present System
C. Changes Required/Expected Benefits
D. Participating Organizations
E. Participating Employees
F. Labor Participation
G. Project Design/Methodology
III. Personnel System Changes
A. Position Classification
B. Staffing
C. Reduction-in-Force
D. Pay Administration
E. Performance Evaluation and Rewards
IV. Conversion or Movement from a Project Position to a General Schedule Position
A. Grade-Setting Provisions
B. Pay-Setting Provisions
V. Budget Discipline
A. Reprogramming Costs
B. Base Cost Assessment
C. Funding Pools for Performance Pay Increases and Bonuses
D. Budget Monitoring
VI. Project Evaluation
VII. Project Management
VIII. Training
A. Manager and Supervisor Training
B. Employee Training
C. Support Staff Training
IX. Experimentation and Revision
X. Authorities and Waiver of Laws and Regulations Required

### I. Executive Summary

This project was designed by the Department of Commerce (DoC) with participation and review by the Office of Personnel Management (OPM). The demonstration project will pursue several key objectives of the National Performance Review: to simplify the current classification system for greater flexibility in classifying work and paying employees; to establish a performance management and rewards system for improving individual and organizational performance; and to improve recruiting and examining to attract highly qualified candidates and get new hires aboard faster. The duration of the project will be 5 years, except that the project may be extended by OPM if further testing and evaluation are warranted.

The proposed project will test whether the interventions of the NIST project can be successful in other environments. Other reasons for testing the NIST interventions in the Department are: (1) all of the diverse operating units in the proposed coverage are within the same Department, the U.S. Department of Commerce, which is also the parent

agency of NIST; (2) several of the operating units in the proposed coverage have served for eight years as comparison sites for the NIST project; and (3) during the implementation and operation of the NIST project, DoC and NIST staff worked closely with the U.S. Department of Agriculture's National Finance Center (NFC), which provides personnel and payroll computing and database services to all of DoC including NIST and the units proposed for the new project.

## II. Introduction

### *A. Purpose*

The purpose of the proposed project is to strengthen the contribution of human resources management in helping to achieve the missions of specific operating units of the Department of Commerce. The project conducted by NIST successfully demonstrated that certain innovative changes could improve human resources management in the NIST environment. The proposed project will test whether these same innovations will produce similarly successful results in other environments.

### *B. Problems With the Present System*

The Department of Commerce encourages, serves, and promotes the Nation's international trade, economic growth, and technological advancement. Within this framework, and in the interest of promoting the national interest through the encouragement of the competitive free enterprise system, the Department provides a wide variety of programs, some of which are included in the proposed coverage of the project.

The current system has three major impediments to a manager's ability to effectively manage human resources and shape the workforce: hiring restrictions and an overly complex job classification system, coupled with poor tools for rewarding and motivating employees and a system that does not assist managers in removing poor performers, build stagnation in the workforce and waste valuable time.

### *C. Changes Required/Expected Benefits*

The innovations of the project and their objectives are:

#### 1. Classification

Career paths will replace occupational groups, broad bands will replace grades, and Departmental broad-band standards will replace OPM classification standards. The classification system will be automated and classification authority will be delegated to line managers.

These changes are intended to simplify and speed up the classification process, make the process more serviceable and understandable, improve the effectiveness of classification decision-making and accountability, and facilitate pay for performance.

Broad bands provide larger classification targets that can be defined by shorter, simpler, and more understandable classification standards. This simpler system will be easier to automate, will require fewer resources to operate, and will facilitate delegation to line managers.

By providing broader and more flexible pay ranges for setting entry pay, broad banding will provide hiring officials with an important tool for attracting high-quality candidates and thus contribute to the objective of increasing the quality of new hires.

By providing more flexible pay setting based on performance, broad banding will give managers the ability to increase the pay of good performers to higher and more competitive levels, thus improving the retention of good performers. At the same time, the potential for higher pay increases for good performance, supported by the broader pay ranges of broad banding, will contribute to the objective of improving organizational and individual performance.

#### 2. Staffing

Staffing methods will include two that were implemented in the NIST Demonstration Project and which are now available to all agencies through examining authority delegated by OPM. For the sake of simplification and to parallel the NIST Demonstration Project, they are retained with the same titles under the Department of Commerce Demonstration Project: Direct Examination and Agency Based Staffing. In addition, there will be placements under Merit Assignment and various noncompetitive appointing authorities. OPM registers will not be used, but positions in occupations covered by the *Luevano* Consent Decree (Administrative Careers with America or successor programs) will be filled using OPM guidance. Other supplemental staffing tools will include such elements as paid advertising, flexible entry salaries, probation, local authority for recruiting and retention payments, and more flexible pay increases associated with promotion.

These changes are intended to attract high-quality candidates, speed up the recruiting and examining process, increase the effectiveness of the probationary review process, and increase the retention of good performers.

Agency-based staffing, supported by paid advertising, will allow hiring officials to focus on more relevant recruiting sources. Direct examination will allow managers to hire individuals with shortage skills as they find them, get them on board faster, and avoid the loss of good candidates who may grow impatient with a long hiring process, thus contributing to the objectives of increased quality of new hires and better fit between position requirements and candidate skills.

The three-year probationary period will help ensure that scientists and engineers who are retained beyond probation are capable of carrying out the full cycle of research and development (R&D) work, thus contributing to the objectives of high-quality hires and a high-performing workforce. Local authority for recruiting and retention payments will provide extra incentives for hiring and retaining individuals with shortage skills, thus contributing to the objectives of increasing the quality of new hires, improving the fit between position requirements and individual qualifications, and improving the retention of good performers.

#### 3. Pay

The most important change in pay administration is the introduction of pay for performance, which will govern individual pay progression within bands. Funds currently applied to within-grade increases, quality step increases, and promotions from one grade to a higher grade when both grades are now in the same band, will be used instead to grant performance-based pay increases within bands. The amount of the basic pay and locality pay increases approved by Congress and the President, however, will continue to be applied to pay schedules and to the salaries of employees with acceptable performance. Other pay tools are supervisory pay differentials, flexible pay setting for new hires, and more flexible pay setting upon promotion.

Pay for performance promotes fairness through the peer ranking process and provides a motivational tool and a retention tool. As a motivational tool, the promise of higher pay increases for good performance encourages high achievement. As a retention tool, pay for performance allows the organization to quickly move the salaries of good performers to levels that are more competitive in the labor market.

Supervisory pay differentials provide a performance incentive for supervisors, addressing the objective of improved individual and organizational

performance. Supervisory pay differentials also address the objective of improving retention by raising the pay of high-performing supervisors to more competitive levels.

Flexible pay setting for new hires is a recruiting tool that gives hiring officials greater flexibility to offer more competitive salaries to high-quality candidates, addressing the objective of improving the quality of new hires. The greater flexibility in setting pay upon promotion gives managers another retention tool to help retain top performers.

4. Performance Appraisal

The new system replaces the current five-level rating system with a two-level rating system, using *Unsatisfactory* and *Eligible* labels. (*Unsatisfactory* is equivalent to *Unacceptable,* as used in Part 430 of Title 5, Code of Federal Regulations.) The most important feature of the proposed performance appraisal system is that it is based on the application of a weighted 100-point scoring system linked to pay for performance. As in the current system, each employee has an individual performance plan composed of several performance elements (all of which are critical elements) that are measured with the 100-point scoring system in conjunction with the application of benchmark performance standards. Based on the resulting total scores, supervisors rank employees by performance within peer groups and grant performance pay increases according to the ranking. Bonuses are granted at the discretion of the supervisor and are not tied to the rating. Highly ranked employees within a peer group receive relatively high pay increases and lower ranked employees receive relatively lower pay increases.

The performance appraisal process is intended to (1) promote good performance; (2) encourage a continuing dialogue between supervisors and employees on organizational objectives, supervisory expectations, employee performance, employee needs for assistance and guidance, and employee development; and (3) provide a basis for performance-related decisions in employee development, pay, rewards, assignment, promotion, and retention. The system will more effectively communicate to employees how they are performing in relation to their peers, the rewards of good performance, and the consequences of poor performance.

Performance-based pay increases give an operating unit the ability to raise the pay of good performers more rapidly, thus improving retention of good performers. The potential for higher pay increases for good performance will encourage achievement and promote the objective of improved individual and organizational performance.

5. Performance Bonuses

In accordance with 5 CFR Part 451, at the end of the annual performance period, Rating Officials, with the approval of Pay Pool Managers, will have the opportunity to reward employee performance with bonuses up to $10,000. Bonuses address two objectives. First, rewarding achievement will make high achievers more likely to remain, thus improving retention of the best performers. Second, the potential for bonuses for achievement will encourage improved individual performance.

6. More Efficient Systems

The Department will improve the efficiency of human resource systems by streamlining procedures, reducing paperwork, and automating processes wherever possible.

7. Line Management Authority

The operating units will delegate greater authority and accountability to line managers. This delegation is intended to improve the effectiveness of human resources management by strengthening the role of line managers as the human resources managers of their units. The project will be managed by the Departmental Personnel Management Board (DPMB), chaired by the Deputy Director of NIST, now the DoC Acting Chief Financial Officer/ Assistant Secretary for Administration. Each major operating unit will have its own Operational Personnel Management Board (OPMB) to oversee local operations. (See the section on *Project Management*.)

*D. Participating Organizations*

The Department of Commerce encourages, serves, and promotes the Nation's international trade, economic growth, and technological advancement. Within this framework, and in the interests of promoting the national interest through the encouragement of the competitive free enterprise system, the Department provides a wide variety of programs, some of which are included in the proposed coverage:

OFFICE OF THE CHIEF FINANCIAL OFFICER AND ASSISTANT SECRETARY FOR ADMINISTRATION (CFO/ASA), OFFICE OF THE SECRETARY

The Office of the CFO/ASA is responsible for Departmental policy and operations dealing with financial management, budget, organizational planning and development, telecommunications, information policy and planning, civil rights, human resources management, facilities and property management, transportation, security, and acquisition. This coverage provides an application of project systems to positions dealing with administrative policy setting for a large and diverse Federal executive agency, an arena never before addressed by broad banding principles. It also covers the DoC Office of Human Resources Management (OHRM), which will provide HRM expertise for the proposed project. The DoC Director of Human Resources Management will be a member of the Departmental Personnel Management Board and will provide staff resources for the project. All units of the Office of the CFO/ASA are located at the DoC headquarters building in Washington, D.C.

The work of the organization is reflected in the following key occupations: Computer Specialist; Management Analyst; General Administration; Budget Analyst; Personnel Management Specialist; Accountant; Contracts Specialist; General Business Specialist; and Security Officer.

OFFICE OF THE GENERAL COUNSEL (OGC), OFFICE OF THE SECRETARY

The OGC is responsible for providing legal services for the Department. It prepares or examines for legal form and effect all orders, rules, and regulations issued by the Department and all legal instruments entered into by the Department. It appears on behalf of the Department before tribunals and courts. It prepares or reviews all legislative proposals. This coverage provides an application of project systems to positions dealing with legal services for a large and diverse Federal executive agency, an arena never before addressed by broad banding principles. All units of the OGC are located in DoC headquarters in the Washington metropolitan area.

The key occupations are Attorney, Paralegal Specialist, and Intelligence Operations Specialist.

OFFICE OF THE UNDER SECRETARY, TECHNOLOGY ADMINISTRATION (TA)

The Technology Administration, which oversees NIST and the National Technical Information Service (NTIS), was established by Congress in 1988 as the premier technology agency working with U.S. industry in improving competitiveness and increasing the impact of technology on economic

growth. The TA coverage would include only the Office of the Under Secretary for Technology Administration and the Office of Technology Policy. This coverage would be an opportunity to apply broad banding principles to a policy, planning, and development environment dealing with issues vital to the future of the U.S. economy as it is affected by technology. All TA offices in the proposed coverage are located at the DoC headquarters building in Washington, D.C.

The key occupations are: General Administration; Management Analyst; and General Business Specialist.

BUREAU OF ECONOMIC ANALYSIS (BEA), ECONOMICS AND STATISTICS ADMINISTRATION

BEA is responsible for providing a current picture of the U.S. economy through the preparation, development, and interpretation of the national income and product accounts showing the gross domestic product, business and other components of the national wealth accounts, industrial market interrelationships traced by the input-output accounts, and other accounts showing such economic indicators as personal income, foreign investment, and balance of payments. The bureau also develops surveys and other tools for analyzing and forecasting economic developments. This coverage provides a test of the NIST system in an environment that uses economists and accountants as analysts, reporters, and forecasters. BEA is located at 1441 L Street, NW., Washington, DC.

The economic analysis work of the organization is reflected in the following key occupations: Economist; Accountant; Financial Administrator; Computer Specialist; Statistician; and Statistical Assistant.

INSTITUTE FOR TELECOMMUNICATION SCIENCES (ITS), NATIONAL TELECOMMUNICATIONS AND INFORMATION ADMINISTRATION

ITS is a major component of the National Telecommunications and Information Administration (NTIA). ITS is the principal Federal telecommunications research and engineering laboratory. The Institute conducts telecommunications research in support of NTIA's responsibilities in advising the President on telecommunications and information policy; developing U.S. plans and policies in international forums; and developing policy for Federal use of the radio frequency spectrum. This application will test how well the NIST interventions work in an R&D environment quite different from the NIST environment. ITS is located in Boulder, Colorado.

The ITS R&D work is carried out primarily by Electronics Engineers, with help from Mathematicians.

The remaining units are subunits of the National Oceanic and Atmospheric Administration (NOAA):

OFFICE OF OCEANIC AND ATMOSPHERIC RESEARCH (OAR)

OAR is the primary research and development unit of NOAA. OAR provides the science and technology to support improvements in NOAA services and address current and future problems. OAR conducts research programs in coastal, marine, atmospheric, and space sciences through its own laboratories and offices, as well as through networks of university-based programs. The work consists of research, modeling, and environmental observations relating to weather, climate, and environmental resources. The laboratory component of OAR is the Environmental Research Laboratories (ERL). ERL includes research laboratories in space environment, aeronomy, environmental technology, weather forecast systems, climate monitoring and diagnostics, severe storms, air resources, oceanography, and geophysical fluid dynamics. This diversity provides a rich new R&D environment for the testing of broad banding principles. OAR and ERL headquarters are located in Silver Spring, Maryland. All ERL laboratories will be included in the project, except the Great Lakes Environmental Research Laboratory (Ann Arbor, MI), the Geophysical Fluid Dynamics Laboratory (Princeton, NJ), and the Pacific Marine Environmental Laboratory (Seattle, WA). The project laboratories are:

Aeronomy Lab—Boulder, CO
Atlantic Oceanographic and Meteorology Lab—Miami, FL
Air Resources Lab—Silver Spring, MD
Climate Diagnostic Center—Boulder, CO
Climate Monitoring and Diagnostics Lab—Boulder, CO
Environmental Technology Lab—Boulder, CO
Forecast Systems Lab—Boulder, CO
Geophysical Fluid Dynamics Lab—Princeton, NJ
National Severe Storms Lab—Norman, OK
Pacific Marine Environmental Lab—Seattle, WA
Space Environmental Lab—Boulder, CO

The dominant occupation within OAR is Meteorologist. Other key occupations are Physical Scientist, Physicist, Electronics Engineer, Computer Specialist, Electronics Technician, Physical Science Technician, and Mathematician.

NATIONAL ENVIRONMENTAL SATELLITE, DATA, AND INFORMATION SERVICE (NESDIS)

NESDIS operates NOAA's satellites and ground facilities; collects, processes, and distributes remotely sensed data; conducts studies, plans new systems, and carries out the engineering required to develop and implement new or modified satellite systems; carries out research and development on satellite products and services; provides ocean data management and services to researchers and other users; and acquires, stores, and disseminates worldwide data related to solid earth geophysics, solar-terrestrial physics, and marine geology and geophysics. NESDIS provides both a technical operations environment and a new R&D environment for testing the NIST interventions. NESDIS headquarters and most of its offices are located in Suitland, Maryland. Ground stations are located at Wallops Island, Virginia, and Fairbanks, Alaska. The National Climatic Data Center is located in Asheville, North Carolina. All of NESDIS will be included in the project, except for the Wallops Island ground station.

The key occupations within NESDIS are Physical Scientist, Meteorologist, Computer Specialist, Oceanographer, Physical Science Technician, Meteorological Technician, Electronics Engineer, Engineering Technician, Geophysicist, and Mathematician.

NATIONAL MARINE FISHERIES SERVICE (NMFS)

The mission of the National Marine Fisheries Service is the stewardship of living marine resources for the benefit of the Nation through their science-based conservation and management and promotion of the health of their environment. NMFS supports domestic and international conservation and management of living marine resources. The goals of NMFS are to rebuild and maintain sustainable fisheries, to promote the recovery of protected species, and to protect and maintain the health of coastal marine habitats. NMFS brings in a variety of work in the biological sciences never before addressed by broad banding principles.

In addition to the headquarters office in Silver Spring, Maryland, there are five regions, each of which consists of a Regional Office and a Fisheries Science Center. The regional offices are located in the following areas: Northeast (Gloucester, Massachusetts); Southeast

(St. Petersburg, Florida); Northwest (Seattle, Washington); Southwest (Long Beach, California); and Alaska (Juneau). All the above units of NMFS would be included in the project except for the following: in Headquarters, the Office of Enforcement and the Inspection Services Division; and in the regions, the Fisheries Science Centers located in Woods Hole, Massachusetts; Miami, Florida; Seattle, Washington; La Jolla, California; and the Alaska Center located in Seattle, Washington.

NMFS is supported mainly by occupations in the biological sciences: Fish Biologist, Biologist, Microbiologist, and Biology Technician. Other important occupations are Chemist, Oceanographer, Wildlife Biologist, Computer Specialist, and General Business Specialist.

*E. Participating Employees*

The project covers all positions that would otherwise be in the General Schedule (GS) system. Wage Grade positions are not included.

Table 1 shows the total number of employees in each operating unit to be covered by the project. Table 2 lists the occupational series in which current positions are classified and shows the number of employees in each series. The OPM occupational series will be retained. The series are listed under the career path in which they will be placed. (See *Position Classification* for definitions of the four career paths.) Table 3 shows the number of covered employees in each series, by General Schedule grade.

TABLE 1.—NUMBER OF COVERED EMPLOYEES BY UNIT

| Operating unit | Number |
|---|---|
| CFO/ASA, OS | 433 |
| OGC, OS | 177 |
| TA | 38 |
| BEA, ESA | 411 |
| ITS, NTIA | 86 |
| NOAA | 2093 |
| OAR | (689) |
| NESDIS | (705) |
| NMFS | (699) |
| Total | 3238 |

TABLE 2.—OCCUPATIONAL SERIES, BY CAREER PATH

| Series | Title | Number |
|---|---|---|
| **Scientific and Engineering (ZP) Career Path** | | |
| 101 | Social Scientist | 1 |
| 110 | Economist | 244 |
| 150 | Geographer* | 1 |
| 184 | Sociologist* | 1 |
| 190 | Anthropologist* | 1 |
| 334 | Computer Specialist | 316 |
| 401 | Biologist | 58 |
| 403 | Microbiologist | 3 |
| 408 | Ecologist* | 9 |
| 480 | Fish Administrator* | 46 |
| 482 | Fish Biologist* | 165 |
| 486 | Wildlife Biologist* | 2 |
| 499 | Biological Science Student | 1 |
| 690 | Industrial Hygienist | 1 |
| 701 | Veterinary Medical Officer* | 1 |
| 801 | General Engineer | 3 |
| 810 | Civil Engineer | 5 |
| 830 | Mechanical Engineer | 4 |
| 850 | Electrical Engineer | 1 |
| 854 | Computer Engineer | 2 |
| 855 | Electronics Engineer | 101 |
| 861 | Aerospace Engineer | 1 |
| 1301 | General Physical Scientist | 194 |
| 1310 | Physicist | 75 |
| 1313 | Geophysicist* | 9 |
| 1315 | Hydrologist* | 4 |
| 1320 | Chemist | 26 |
| 1330 | Astronomer | 8 |
| 1340 | Meteorologist* | 235 |
| 1350 | Geologist | 2 |
| 1360 | Oceanographer | 77 |
| 1382 | Food Technologist* | 2 |
| 1399 | Physical Science Student | 3 |
| 1515 | Operations Research Analyst | 1 |
| 1520 | Mathematician | 27 |
| 1529 | Mathematical Statistician | 1 |
| 1530 | Statistician | 12 |
| 1550 | Computer Scientist | 6 |
| ZP | Total | 1649 |
| **Scientific and Engineering Technician (ZT) Career Path** | | |
| 332 | Computer Operator | 12 |
| 404 | Biology Technician | 11 |
| 802 | Engineering Technician | 24 |
| 856 | Electronics Technician | 27 |
| 1311 | Physical Science Technician | 83 |
| 1341 | Meteorological Technician* | 40 |
| 1531 | Statistical Clerk/Assistant* | 24 |
| ZT | Total | 221 |
| **Administrative (ZA) Career Path** | | |
| 18 | Safety Specialist | 2 |
| 80 | Security Officer | 14 |
| 130 | Foreign Affairs Specialist* | 10 |
| 131 | International Relations Specialist* | 7 |
| 132 | Intelligence Operations Specialist* | 8 |
| 201 | Personnel Management Specialist | 23 |
| 212 | Personnel Staffing Specialist* | 1 |
| 223 | Salary and Wage Specialist* | 1 |
| 230 | Employee Relations Specialist | 8 |
| 260 | Equal Employment Specialist | 22 |
| 301 | Miscellaneous Administration | 107 |
| 340 | Program Manager | 2 |
| 341 | Administrative Officer | 24 |
| 342 | Support Services Specialist* | 3 |
| 343 | Management Analyst | 117 |
| 391 | Telecommunications Specialist | 12 |
| 501 | Financial Administrator | 16 |
| 510 | Accountant | 66 |
| 560 | Budget Analyst | 49 |
| 610 | Nurse* | 1 |
| 696 | Consumer Safety Specialist | 1 |
| 904 | Law Clerk* | 2 |
| 905 | Attorney* | 124 |
| 930 | Appeals Officer* | 2 |
| 950 | Paralegal Specialist* | 7 |
| 1001 | General Arts and Information | 3 |
| 1008 | Interior Designer* | 2 |
| 1035 | Public Affairs Specialist | 2 |
| 1082 | Writer/Editor | 16 |
| 1083 | Technical Writer/Editor | 5 |
| 1084 | Visual Information Specialist | 12 |
| 1101 | General Business Specialist | 71 |
| 1102 | Contracts Specialist | 21 |
| 1140 | Trade Specialist | 10 |
| 1165 | Loan Specialist* | 10 |
| 1170 | Realty Specialist* | 4 |
| 1176 | Building Management Specialist* | 2 |
| 1222 | Patent Attorney* | 1 |
| 1410 | Librarian | 18 |
| 1412 | Technical Information Specialist | 3 |
| 1601 | General Facilities Manager | 1 |
| 1654 | Printing Manager | 11 |
| 1670 | Equipment Specialist | 1 |
| 2010 | Inventory Manager | 2 |
| 2030 | Distribution Facilities Specialist* | 1 |
| 2101 | Transportation Specialist | 2 |
| ZA | Total | 827 |
| **Support (ZS) Career Path** | | |
| 29 | Environmental Protection Assistant* | 2 |
| 86 | Security Clerk/Assistant* | 9 |
| 203 | Personnel Clerk/Assistant | 10 |
| 303 | Miscellaneous Clerk/Assistant | 96 |
| 305 | Mail and File Clerk | 1 |
| 309 | Correspondence Clerk/Assistant | 1 |
| 318 | Secretary | 236 |
| 322 | Clerk-Typist | 3 |
| 326 | Office Automation Clerk/Assistant | 47 |
| 335 | Computer Clerk/Assistant | 46 |
| 344 | Management Clerk/Assistant | 8 |
| 361 | Equal Opportunity Clerk/Assistant | 1 |

TABLE 2.—OCCUPATIONAL SERIES, BY CAREER PATH—Continued

| Series | Title | Number |
|---|---|---|
| 399 | Student Trainee | 24 |
| 503 | Financial Clerk/Assistant | 2 |
| 525 | Accounting Technician | 10 |
| 530 | Cash Clerk/Teller* | 1 |
| 544 | Payroll Clerk/Technician | 1 |
| 561 | Budget Clerk/Assistant | 7 |
| 963 | Legal Instruments Examiner* | 9 |

TABLE 2.—OCCUPATIONAL SERIES, BY CAREER PATH—Continued

| Series | Title | Number |
|---|---|---|
| 1087 | Editorial Clerk/Assistant | 1 |
| 1101 | Trade Information/Financial Assistant | 6 |
| 1105 | Purchasing Agent | 4 |
| 1106 | Procurement Clerk/Assistant | 1 |
| 1411 | Library Technician | 9 |
| 2005 | Supply Clerk/Assistant | 5 |

TABLE 2.—OCCUPATIONAL SERIES, BY CAREER PATH—Continued

| Series | Title | Number |
|---|---|---|
| 2102 | Transportation Clerk/Assistant | 1 |
| ZS | Total | 541 |

*These occupations were not tested by the NIST project.

TABLE 3.—COVERED EMPLOYEES, BY SERIES AND GRADE

| Series | Grade | | | | | | | | | | | | | | | Total |
|---|---|---|---|---|---|---|---|---|---|---|---|---|---|---|---|---|
| | 1 | 2 | 3 | 4 | 5 | 6 | 7 | 8 | 9 | 10 | 11 | 12 | 13 | 14 | 15 | |
| 18 | | | | | | | | | 1 | | | | 1 | | | 2 |
| 29 | | | | | 1 | | 1 | | | | | | | | | 2 |
| 80 | | | | | | | | | | | | 6 | 5 | 2 | 1 | 14 |
| 86 | | | | | | 7 | 1 | 1 | | | | | | | | 9 |
| 101 | | | | | | | | | | | | 1 | | | | 1 |
| 110 | | | | | | | 1 | | 23 | | 33 | 81 | 42 | 39 | 25 | 244 |
| 130 | | | | | | | | | | | | 2 | 3 | 4 | 1 | 10 |
| 131 | | | | | | | | | | | | | 3 | 3 | 1 | 7 |
| 132 | | | | | | | | | 1 | | 1 | 2 | 2 | 1 | 1 | 8 |
| 150 | | | | | | | | | | | | 1 | | | | 1 |
| 184 | | | | | | | | | | | | | | 1 | | 1 |
| 190 | | | | | | | | | | | | | | | 1 | 1 |
| 201 | | | | | | | 1 | | | | | 6 | 8 | 5 | 3 | 23 |
| 203 | | | | | 1 | | 7 | 2 | | | | | | | | 10 |
| 212 | | | | | | | | | | | | | | 1 | | 1 |
| 223 | | | | | | | | | | | | | 1 | | | 1 |
| 230 | | | | | | | | | | | | 2 | 3 | 3 | | 8 |
| 260 | | | | | | | 1 | | | | 2 | 3 | 11 | 3 | 2 | 22 |
| 301 | | | | | | | 1 | | 15 | 1 | 22 | 19 | 17 | 15 | 17 | 107 |
| 303 | 2 | | 3 | 4 | 21 | 16 | 28 | 11 | 11 | | | | | | | 96 |
| 305 | | | | 1 | | | | | | | | | | | | 1 |
| 309 | | | | | | 1 | | | | | | | | | | 1 |
| 318 | | | | 1 | 26 | 87 | 58 | 35 | 27 | 2 | | | | | | 236 |
| 322 | | | 1 | 2 | | | | | | | | | | | | 3 |
| 326 | 1 | 4 | 1 | 10 | 21 | 8 | 2 | | | | | | | | | 47 |
| 332 | | | | | 2 | 1 | 5 | | 4 | | | | | | | 12 |
| 334 | | | | | 1 | | 10 | | 24 | | 47 | 93 | 90 | 45 | 6 | 316 |
| 335 | | | 1 | 3 | 8 | 8 | 10 | 8 | 4 | 3 | 1 | | | | | 46 |
| 340 | | | | | | | | | | | 1 | | 1 | | | 2 |
| 341 | | | | | | | 3 | | 3 | | 5 | 8 | 4 | 1 | | 24 |
| 342 | | | | | | | | | 1 | | 1 | 1 | | | | 3 |
| 343 | | | | | | | 8 | | 6 | | 9 | 13 | 39 | 31 | 11 | 117 |
| 344 | | | | | | 2 | 2 | 2 | 2 | | | | | | | 8 |
| 361 | | | | | | | 1 | | | | | | | | | 1 |
| 391 | | | | | | | | | 2 | | 1 | 2 | 4 | 2 | 1 | 12 |
| 399 | 22 | | | | 2 | | | | | | | | | | | 24 |
| 401 | | | | | | | 3 | | 9 | | 11 | 17 | 11 | 4 | 3 | 58 |
| 403 | | | | | | | 1 | | | | | 1 | | | 1 | 3 |
| 404 | | | 1 | 1 | 9 | | | | | | | | | | | 11 |
| 408 | | | | | | | | | | | 3 | 1 | 1 | 3 | 1 | 9 |
| 480 | | | | | | | | | | | | 1 | 10 | 22 | 13 | 46 |
| 482 | | | | | | | 4 | | 10 | | 29 | 59 | 45 | 15 | 3 | 165 |
| 486 | | | | | | | | | | | 1 | 1 | | | | 2 |
| 499 | | | | 1 | | | | | | | | | | | | 1 |
| 501 | | | | | | | 1 | | 1 | | 1 | 8 | 5 | | | 16 |
| 503 | | | | | | | 2 | | | | | | | | | 2 |
| 510 | | | | | | | 2 | | 2 | | 8 | 20 | 16 | 15 | 3 | 66 |
| 525 | | | | 1 | 4 | 4 | 1 | | | | | | | | | 10 |
| 530 | | | | | | 1 | | | | | | | | | | 1 |
| 544 | | | | | | | | | 1 | | | | | | | 1 |
| 560 | | | | | | | | | 5 | | 9 | 6 | 15 | 8 | 6 | 49 |
| 561 | | | | | | 3 | 3 | 1 | | | | | | | | 7 |
| 610 | | | | | | | | | 1 | | | | | | | 1 |
| 690 | | | | | | | | | | | | 1 | | | | 1 |
| 696 | | | | | | | | | | | 1 | | | | | 1 |
| 701 | | | | | | | | | | | | | 1 | | | 1 |
| 801 | | | | | | | | | | | | | | 1 | 2 | 3 |
| 802 | | | 2 | 1 | | | 1 | | | 1 | 2 | 17 | | | | 24 |
| 810 | | | | | | | | | | | | 3 | 2 | | | 5 |
| 830 | | | | | | | | | 1 | | 1 | | 1 | 1 | | 4 |
| 850 | | | | | | | | | | | | | | | 1 | 1 |
| 854 | | | | | | | | | | | 1 | | 1 | | | 2 |
| 855 | | | | | | | 2 | | 4 | | 11 | 17 | 36 | 17 | 14 | 101 |
| 856 | | | | | | | 1 | 1 | 4 | 2 | 9 | 9 | 1 | | | 27 |
| 904 | | | | | | | | | | | 2 | | | | | 2 |
| 905 | | | | | | | | | | | 4 | 13 | 16 | 38 | 53 | 124 |
| 930 | | | | | | | | | | | | 1 | 1 | | | 2 |
| 950 | | | | | | | | | 5 | | 1 | 1 | | | | 7 |
| 963 | | | | | | 4 | 4 | 1 | | | | | | | | 9 |
| 1001 | | | | | | | | | 1 | | | 1 | | 1 | | 3 |
| 1008 | | | | | | | | | | | | 2 | | | | 2 |
| 1035 | | | | | | | | | | | | 2 | | | | 2 |
| 1082 | | | | | | | | | 2 | | 10 | 3 | 1 | | | 16 |
| 1083 | | | | | | | | | 2 | | 1 | 1 | | 1 | | 5 |

TABLE 3.—COVERED EMPLOYEES, BY SERIES AND GRADE—Continued

| Series | Grade | | | | | | | | | | | | | | | Total |
|---|---|---|---|---|---|---|---|---|---|---|---|---|---|---|---|---|
| | 1 | 2 | 3 | 4 | 5 | 6 | 7 | 8 | 9 | 10 | 11 | 12 | 13 | 14 | 15 | |
| 1084 | | | | | | | | | 2 | | 6 | 3 | 1 | | | 12 |
| 1087 | | | | | | | 1 | | | | | | | | | 1 |
| 1101 | | | | | 1 | 3 | 7 | | 16 | | 22 | 9 | 11 | 5 | 3 | 77 |
| 1102 | | | | | | | | | | | 2 | 3 | 4 | 9 | 3 | 21 |
| 1105 | | | | | | | 4 | | | | | | | | | 4 |
| 1106 | | | | | | | | 1 | | | | | | | | 1 |
| 1140 | | | | | | | | | | | | 3 | 6 | | 1 | 10 |
| 1165 | | | | | | | | | | | 7 | 1 | 2 | | | 10 |
| 1170 | | | | | | | | | | | | 2 | 1 | 1 | | 4 |
| 1176 | | | | | | | | | | | | | 1 | 1 | | 2 |
| 1222 | | | | | | | | | | | | | | | 1 | 1 |
| 1301 | | | | | | | 1 | | 4 | | 9 | 30 | 56 | 56 | 38 | 194 |
| 1310 | | | | | | | | | | | 2 | 10 | 18 | 22 | 23 | 75 |
| 1311 | | | 3 | 4 | 1 | 1 | 9 | 3 | 21 | 3 | 24 | 6 | 8 | | | 83 |
| 1313 | | | | | | | | | 1 | | 1 | 2 | 2 | 2 | 1 | 9 |
| 1315 | | | | | | | | | | | | 2 | 1 | | 1 | 4 |
| 1320 | | | | | | | 1 | | 2 | | 1 | 5 | 8 | 5 | 4 | 26 |
| 1330 | | | | | | | | | | | | 1 | 5 | 1 | 1 | 8 |
| 1340 | | | | | 1 | | 1 | | 3 | 15 | 64 | 79 | 48 | 24 | 235 | |
| 1341 | | | | 1 | | 12 | 10 | 3 | 9 | | 3 | 2 | | | | 40 |
| 1350 | | | | | | | | | | | | | 1 | | 1 | 2 |
| 1360 | | | | | | | | | 1 | | 9 | 15 | 26 | 15 | 11 | 77 |
| 1382 | | | | | | | | | | | 1 | | 1 | | | 2 |
| 1399 | | | | 3 | | | | | | | | | | | | 3 |
| 1410 | | | | | | | | | 1 | | 2 | 10 | 2 | 2 | 1 | 18 |
| 1411 | | 1 | 2 | | | 2 | 4 | | | | | | | | | 9 |
| 1412 | | | | | | | | | | | 1 | | 2 | | | 3 |
| 1515 | | | | | | | | | | | 1 | | | | | 1 |
| 1520 | | | | | | | | | 1 | | 3 | 8 | 10 | 5 | | 27 |
| 1529 | | | | | | | | | | | | | | | 1 | 1 |
| 1530 | | | | | | | | | 1 | | 1 | 1 | 4 | 4 | 1 | 12 |
| 1531 | | | | 1 | | 2 | 5 | 2 | 10 | 3 | 1 | | | | | 24 |
| 1550 | | | | | | | | | | | | 1 | 4 | 1 | | 6 |
| 1601 | | | | | | | | | | | | 1 | | | | 1 |
| 1654 | | | | | | | | | 1 | | 2 | 3 | 1 | 3 | 1 | 11 |
| 1670 | | | | | | | | | | | | 1 | | | | 1 |
| 2005 | | | | | 2 | 1 | 2 | | | | | | | | | 5 |
| 2010 | | | | | | | | | 1 | | | 1 | | | | 2 |
| 2030 | | | | | | | | | | | | 1 | | | | 1 |
| 2101 | | | | | | | | | | | | 2 | | | | 2 |
| 2102 | | | | | | 1 | | | | | | | | | | 1 |
| Total | 25 | 5 | 14 | 35 | 101 | 164 | 210 | 70 | 247 | 15 | 343 | 612 | 651 | 464 | 285 | 3238 |

Senior Executive Service and ST–3104 Positions

The personnel systems for SES positions (see 5 U.S.C. 3131–3136 and 5 U.S.C. 5381–5385) will not change for the project. SES classification, staffing, compensation, performance appraisal, awards, and reduction in force will be based on standard SES methods. The personnel systems for ST–3104 positions (see 5 U.S.C. 3104 and 5376) will change only to the extent that ST–3104 positions are in the same performance appraisal, awards, and reduction-in-force systems as General Schedule positions. Classification, staffing, and compensation, however, will not change. Neither SES nor ST–3104 employees will be subject to the pro rata share payouts upon conversion to the demonstration system. Pay adjustments for their positions under the project will be carried out in accordance with existing Federal rules pertaining to SES and ST–3104 pay adjustments.

General Schedule Positions

All General Schedule (GS and GM) positions are incorporated in the new career path/pay band system. The step increases of the General Schedule will be replaced by the annual performance pay increases. Except as otherwise provided in the project plan, laws and regulations pertaining to GS employees (e.g., overtime pay and cost-of living allowance provisions) continue in force for all project employees in the same way as they do for GS employees.

*F. Labor Participation*

There is one bargaining unit within the Office of the Chief Financial Officer/Assistant Secretary for Administration (CFO/ASA), represented by the Graphics Communications International Union (GCIU). All other unions affected by the project are local unions of the American Federation of Government Employees (AFGE). All of the AFGE representation is within the National Oceanic and Atmospheric Administration (NOAA). The following table shows the number of project employees represented by each union local.

TABLE 4.—BARGAINING UNIT COVERAGE

| Operating unit | Location | Union local | Employees covered |
|---|---|---|---|
| CFO/ASA | Washington, DC. | GCIU 1–C. | 21 |
| NESDIS .. | Camp Springs, MD. | AFGE 3680. | 118 |
| ..... | Asheville, NC. | AFGE 146. | 146 |
| NMFS ..... | Silver Spring, MD. | AFGE 2703. | 169 |
| MASC ..... | Boulder, CO. | AFGE 2186. | 84 |
| OAR ..... | Triangle Park, NC. | AFGE 3347. | 39 |

The project operating units provided numerous briefings on the project to employees and union representatives. Human resources representatives traveled to the various organizational locations to conduct three-hour information briefings. In addition, each bargaining unit covered was invited to send a representative to Boulder, Colorado at management's cost to

receive further information on the project and to interact with a panel of NIST managers and employees currently in the NIST project. The project operating units offered Impact and Implementation Bargaining to each of these unions on the conditions and provisions of the proposed project. All of the unions on the list have agreed to the project.

*G. Project Design/Methodology*

The project methodology is to introduce into selected DoC operating units certain innovations in human resources management, and to evaluate over time the effects of those innovations on the ability of the operating units to manage their human resources. The methodology includes the following steps:

1. Selection of Innovations: After review of the innovations tested at NIST, the Department has determined that all would have potential benefit in other DoC units and therefore should be included in the proposed project. These innovations, and the procedures associated with them, are described below under *Position Classification, Staffing, Reduction-in-Force, Pay Administration, and Performance Evaluation and Rewards.*

2. Selection Of Operating Units: The Department has selected several operating units (See *Participating Organizations*.) that will provide a useful test of whether the innovations successfully tested at NIST will produce similarly successful results in other environments.

3. Establishment of Goals and Objectives: The following section on *Goals and Objectives* describes the overall goals of the project and the objectives associated with each of the innovations.

4. Partnership: The Department has sought input on the proposal from each affected local union. (See *Labor Participation*.) The Department will also ensure that partnership in accordance with Executive Order 12871 continues to be an integral part of planning and implementation.

5. Baseline Evaluation: To provide a basis of comparison between employee opinions of the current system and their future opinions of the project system, each employee in the covered operating units will be asked to complete an opinion questionnaire on the current system prior to implementation of the project. To establish a baseline cost analysis, each operating unit will be required to analyze its personnel costs during fiscal years 1994, 1995, and 1996.

6. Training: The Department and the operating units will provide training to human resources staff, managers, and employees prior to implementation of the project and will provide additional training to managers on the pay-for-performance system prior to the end of the first performance cycle. (See *Training*.)

7. Implementation: To ensure a smooth implementation, the Department and the operating units will emphasize top management support; the development of detailed operating procedures prior to implementation; thorough training of managers and human resources office staff; step-by-step implementation planning; adequate backup systems, particularly in automated personnel and payroll systems; and sufficient operating resources.

8. Operation: The Department will exercise continual oversight, under the direction of the Departmental Personnel Management Board (See *Project Management*.) to ensure that project authorities and procedures are administered correctly.

9. Evaluation: The Department will arrange for an annual evaluation of the project under an OPM-approved evaluation plan. (See *Project Evaluation*.) The evaluation will be designed to determine whether the innovations are achieving the goals and objectives described in the following section and are operating within acceptable cost limits (See Budget Discipline.)

**III. Personnel System Changes**

*A. POSITION CLASSIFICATION*

1. Introduction

Career paths will replace occupational groups, broad bands will replace grades, and Departmental broad-band standards will replace OPM classification standards. The classification system will be automated, and classification authority will be delegated to line managers.

These changes are intended to simplify and speed up the classification process, make the process more serviceable and understandable, improve the effectiveness of classification decision-making and accountability, and facilitate pay for performance. Broad bands provide larger classification targets that can be defined by shorter, simpler, and more understandable classification standards. This simpler system will be easier to automate, will require fewer resources to operate, and will facilitate delegation to line managers.

By providing broader and more flexible pay ranges for setting entry pay, broad banding will provide hiring officials with an important tool for attracting high-quality candidates and thus will contribute to the objectives of increasing the quality of new hires and improving workforce performance.

By providing more flexible pay setting based on performance, broad banding will give managers the ability to increase the pay of good performers to higher and more competitive levels, thus improving the retention of good performers. At the same time, the promise of higher pay increases for good performance, supported by the broader pay ranges of broad banding, will contribute to the objective of improving organizational and individual performance.

2. Career Paths

A career path aggregates comparable occupations that have parallel career patterns and are suitable for similar treatment in staffing, classification, pay, and other personnel functions. There are four career paths:

(a) Scientific and Engineering (ZP): research, policy, staff, and managerial positions in science, engineering, computing, and mathematics.

(b) Scientific and Engineering Technician (ZT): science and engineering support positions.

(c) Administrative (ZA): specialist positions in such fields as finance, procurement, human resources management, public information, technical information, accounting, and management analysis.

(d) Support (ZS): clerical, assistant, secretarial, police, and other support positions not fitting the definition of any of the other career paths.

3. Bands

Each career path is divided into five bands, which replace GS grades. The maximum rate of a band is step 10 of the highest GS grade in the band *including* locality rates in the 48 contiguous States and the District of Columbia. When a special rate for one or more of the occupations in the band is higher than the applicable locality rate, the Departmental Personnel Management Board will have the option of using the maximum applicable special rate to set the maximum rate of the band. For each regular band, there is a corresponding supervisory band for employees who receive supervisory pay differentials. The supervisory band has the same minimum rate as the nonsupervisory band, but has a maximum rate 6 percent higher than the maximum rate of the nonsupervisory band. Positions in the

supervisory band include positions that involve formal supervisory duties that occupy at least 25 percent of the incumbent's time and other positions approved by the DPMB on a case-by-case basis. The following chart shows the four project career paths, the bands in each career path, and the relationship between bands and General Schedule grades.

BILLING CODE 6325–01–P

CHART 1: CAREER PATHS AND BANDS

| CAREER PATHS | BANDS | | | | | | | | | | | | | | |
|---|---|---|---|---|---|---|---|---|---|---|---|---|---|---|---|
| Scientific and Engineering (ZP) | I | | | | | | II | | | | III | | IV | | V |
| Scientific and Engineering Technician (ZT) | I | | | | II | | | | III | | IV | | V | | |
| Administrative (ZA) | I | | | | | | II | | | | III | | IV | | V |
| Support (ZS) | I | | II | | III | | IV | | V | | | | | | |
| GS Grades | 1 | 2 | 3 | 4 | 5 | 6 | 7 | 8 | 9 | 10 | 11 | 12 | 13 | 14 | 15 |

BILLING CODE 6325–01–C

4. Occupational Series

The General Schedule occupational series will be retained. New occupational series may be added or deleted in response to programmatic needs. New or revised series may also be established.

5. Classification Standards

Each classification standard will describe each band in two factors: (1) general duties and responsibilities and (2) knowledge, skills, and abilities. These two factors complement each other at each band in a career path and may not be separated in classifying a position. OPM classification standards will not be used.

6. Position Descriptions

Line managers will follow an automated menu-driven process to classify positions and produce position descriptions.

7. Delegation of Classification Authority

The Departmental Personnel Management Board (DPMB) will oversee the delegation of classification authority to line managers. Under authority delegated by the DPMB, the Department's human resources staff will monitor and review classification decisions made by managers to ensure consistent and uniform application of classification policies and guidelines. Under this authority, the Department's Director for Human Resources Management will establish a plan to review the accuracy of classification decisions made by line managers and make periodic reports to the DPMB. A variety of approaches will be used to conduct classification reviews, such as regularly scheduled Departmental oversight reviews as well as ad hoc reviews conducted to address specific classification issues identified through data analysis, random sampling of classification actions, project evaluation reports, etc. The Governmentwide system of approval of SES and ST–3104 positions will be maintained.

8. Classification Appeals

An employee covered by the DoC Demonstration Project may appeal the career path, occupational series, or pay band of his or her position at any time. An employee wishing to formally appeal must first appeal to the Operating Unit (OU). If the employee is dissatisfied with the OU decision, he or she may appeal further to the Department level. The decision of the Department will be final.

Details pertaining to the classification appeals process are found in the Project Operating Procedures.

*B. Staffing*

1. Introduction

The project operating units will use a variety of staffing methods to fill positions, including Direct Examination, Agency-Based Staffing, Merit Assignment, and various noncompetitive placements. Recruiting

and examining will be carried out directly by the operating units except for positions covered by the *Luevano* Consent Decree. OPM registers will not be used. These methods will be supplemented by other staffing tools, such as paid advertising, flexible entry salaries, probation, recruitment and retention payments, and more flexible pay increases associated with promotion. The Department will make necessary adjustments in response to future revisions in staffing statutes. These changes are intended to attract higher-quality candidates, speed up the recruiting and examining process, increase the effectiveness of the probationary review process, and improve the retention of good performers.

Agency-based staffing, supported by paid advertising, will allow hiring officials to focus on more relevant recruiting sources. Direct examination will allow managers to hire individuals with shortage skills as they find them, get them on board faster, and avoid the loss of good candidates who may grow impatient with a long hiring process, thus contributing to the objectives of increasing the quality of new hires and improving the fit between position requirements and candidate skills. The three-year probationary period will help ensure that scientists and engineers who are retained beyond probation are capable of carrying out a full cycle of R&D work, thus contributing to the objectives of higher-quality hires and a higher-performing workforce. Local authority for recruiting and retention payments will provide extra incentives for hiring and retaining individuals with shortage skills, thus contributing to the objectives of increasing the quality of new hires, improving the fit between position requirements and individual qualifications, and improving the retention of good performers.

2. Direct Examination

The project will apply two direct examination authorities: Direct Examination Critical Shortage Occupations and Direct Examination Critical Shortage Highly Qualified Candidates. These vacancies will normally be filled through direct recruiting by selecting officials, supplemented by a required search of the operating unit Applicant Supply File. Direct examination procedures are not exempt from the application of veteran preference rules.

(a) Direct Examination: Critical Shortage Occupations.

Direct examination procedures will be used for categories of occupations which require skills that are in short supply. All occupations for which there is a special rate under the General Schedule pay system constitute a shortage category, and all occupations at Band III and above in the ZP Career Path constitute a shortage category. Any position in these shortage categories may be filled through direct examination procedures.

(b) Direct Examination: Critical Shortage Highly Qualified Candidates.

Direct examination procedures will be used for additional positions for which there is a shortage of highly qualified candidates. Candidates for positions at Band I or II of the ZP Career Path who have a bachelor's degree with at least a 2.9 GPA (on a 4.0 scale) in a job-related major or a master's degree in a job-related field constitute a shortage category; candidates for positions at Band I of the ZT Career Path who have at least a 2.9 GPA in a job-related field during a minimum of at least 2 years in an accredited college, junior college, or technical institute constitute a shortage category; and candidates for positions at Band II of the ZT Career Path who have at least a 2.9 GPA in a job-related field in 4 years of college study constitute a shortage category.

3. Agency-Based Staffing

Agency-based staffing procedures will be used to fill vacancies not covered by direct examination or the project operating unit Merit Assignment Plan (MAP). Vacancies filled by agency-based procedures will be advertised at a minimum through the Governmentwide automated employment information system operated by (OPM).

4. Merit Assignment Plan (MAP)

MAP procedures will be used to fill positions restricted to current or former Federal employees with competitive status. These plans will be amended to include any demonstration project flexibilities.

5. Applicant Supply Files

The operating units will advertise the availability of job opportunities in direct-examination occupations by continuous posting of an Applicant Supply Bulletin on the Governmentwide automated employment information system operated by OPM. The operating units will accept applications for this file on an open-continuous basis for all direct-hire authorities. Selecting officials will be able to recruit directly for applicants, but any applicants they find must compete with applicants who apply through the Applicant Supply Bulletin and other applicants whose applications are stored in the operating unit Applicant Supply File.

6. Referral Procedures for Direct Examination and Agency-Based Staffing Authorities

Either direct referral or rating and ranking will be used to refer applicants for vacancies under direct examination and agency-based staffing authorities.

(a) Direct referral.

A qualified candidate may be referred directly without rating and ranking:

(1) When there are no more than three qualified candidates and no preference eligibles; or

(2) If the candidate is a preference eligible with a compensable Service-connected disability of 10 percent or more. (These preference eligibles are given absolute preference except when the position is at Band III or above in the Scientific and Engineering Career Path.) Selecting officials may choose any of these preference eligibles when more than one are referred.

(b) Rating and ranking.

Rating and ranking (including veteran preference and ''rule-of-three'' procedures) will be used when the list of qualified candidates contains:

(1) More than three candidates; or

(2) Two or more candidates including at least one preference eligible (except when direct referral of a 10-point veteran is made under 1b above).

7. Priority Placement

All Department of Commerce and OPM priority placement programs will be followed.

8. Paid Advertising

Paid advertising may be used as one of the first steps in recruitment without having to first try unpaid methods.

9. Private Sector Temporaries

Private sector temporary help services may be used as appropriate.

10. Probationary Period

Probation under the project will follow current law and regulations, except when an employee in the Scientific and Engineering (ZP) Career Path is required to serve a probationary period. The ZP probationary period will be three years, except that a supervisor may end the probationary period of a subordinate ZP employee anytime after one year. Near the end of the first year of a ZP employee's probationary period, the supervisor will be required to decide whether to (1) change the employee from probationary status to non-probationary status; (2) remove the employee; or (3) continue the employee on probation. If the employee is

continued on probation, the supervisor must select from the same options near the end of the second year of probation. If probation is continued into the third year, the supervisor must make a final decision on whether to retain or remove the employee near the end of the third and final year of probation.

The purpose of the three-year probationary period for scientists and engineers only is to allow a hiring official to view the full cycle of a research assignment before making a final decision on retaining the employee. The one-year probationary period is insufficient to cover the full cycle of research and development from assignment of a research project to publication of results. For the other three career paths, the one-year probationary period is adequate.

11. Qualification Standards

The qualifications required for placement within a band and within a career path will be based on the OPM Qualification Standards for General Schedule Positions, except that testing requirements will not be used and the Superior Academic Criterion will be defined as a 2.9 GPA (on a 4.0 scale). The minimum qualifications for the occupation and for the GS grade corresponding to the lowest grade in the band will apply. The DPMB may authorize new or modified qualification standards based on current practices in the scientific, engineering, and computer science fields and to reflect modern curricula in recognized degree programs.

12. Recruitment and Retention Payments

The project operating units may grant recruiting and retention payments in appropriate circumstances, not to exceed $10,000 or 25 percent of basic pay, whichever is greater. Decisions on allowances will be based on market factors such as salary comparability and salary offer issues, relocation and dislocation issues, programmatic urgency, emerging technologies, turnover rates, special qualifications, and shortage categories or scarcity of positions unique to the operating unit. All scientific, engineering, and other hard-to-fill positions will be eligible. Recruitment and retention payments will not be considered part of basic pay.

13. Travel Expenses

Travel and transportation expenses, advancement of funds, per diem expenses incident to travel, and/or relocation expenses may be provided to new hires in the same manner as is authorized in sections 5723, 5724, 5724a, 5724b, and 5724c of title 5, U.S. Code. Recipients must sign service agreements indicating commitment to at least 12 months of continued service.

14. Promotion

A promotion is a change of an employee to (1) a higher band in the same career path, or (2) a band in another career path in combination with an increase in pay. To be eligible for promotion, an employee must have a current performance rating of *Eligible*. The time-in-band requirement for promotion eligibility is 52 weeks, with two exceptions: (1) an employee may be promoted from Band I to Band II in the Support Career Path without time restriction; and (2) an employee may be promoted from Band II to Band III in the Support Career Path without time restriction if the employee was not promoted from a Band I to a Band II position during the previous 52 weeks. (For pay provisions related to promotion, see *Pay Administration*.)

*C. Reduction-in-Force*

1. Introduction

The project operating units will follow reduction-in-force procedures contained in law and regulation, except that career path will be added to the definition of competitive areas, retention credit for performance will be based on performance ranking, and grades will be converted to bands for the purpose of interpreting reduction-in-force regulations.

The objective of the link between career paths and competitive areas is to improve the fit between the skills of displaced employees and the positions they are offered through reduction-in-force procedures. The objective of the link between performance and retention standing is to continue to make performance a factor in retention during reduction-in-force.

2. Competitive Areas

Each of the four career paths in each project operating unit local commuting area will be a separate competitive area—separate from the other career paths and separate from the competitive areas of other operating unit employees.

3. Link Between Performance and Retention

An employee with an overall performance score in the top 10 percent of scores within a peer group (See *Performance Evaluation and Rewards* below.) will be credited with 10 additional years of service for retention purposes. The total credit will be based on the employee's three most recent annual performance ratings of record received during the 4-year period prior to an established cutoff date, for a potential total credit of 30 years. Career status and veteran preference will continue to have the same effect on retention standing as they now have under current regulations. No performance-related retention credit will convert to this system from any other performance appraisal system.

4. Link Between Bands and Grades

OPM reduction-in-force regulations on assignment rights (5 CFR 351.701) will be applied to the project by substituting ''one band'' for ''three grades'' and ''two bands'' for ''five grades.''

*D. Pay Administration*

1. Introduction

The most important change in pay administration is the introduction of pay for performance, which will govern individual pay progression within bands. The amount of the basic pay and locality pay increases approved by Congress and the President will continue to be applied to pay schedules and employee salaries, with the variations described below. Other pay tools are supervisory pay differentials, flexible pay setting for new hires, and more flexible pay setting upon promotion.

Pay for performance promotes fairness and provides a motivational tool and a retention tool. It is fair that higher achievement should produce higher rewards. In particular, the quality work that arises from a commitment to the goals and objectives of the organization should be rewarded by higher pay increases. As a motivational tool, the promise of higher pay increases for good performance encourages high achievement. As a retention tool, pay for performance allows the organization to more quickly move the salaries of good performers to levels that are more competitive in the labor market.

Supervisory pay differentials provide an extra performance incentive for supervisors, addressing the objective of improved individual and organizational performance. Supervisory pay differentials also address the objective of improving retention by raising the pay of high-performing supervisors to more competitive levels. Flexible pay setting for new hires is a recruiting tool that gives hiring officials greater flexibility to offer more competitive salaries to high-quality candidates, addressing the objective of improving the quality of new hires. The greater flexibility in setting pay upon promotion gives managers another

retention tool to help retain top performers.

2. Pay for Performance

Pay for performance has three components: (a) the annual adjustment to basic pay, which includes the annual general increase and the locality pay increase; (b) annual performance pay increases; and (c) bonuses. The first component, the annual adjustment to basic pay, is set according to the subsections referring to general and locality increases. The second component, performance pay increases, is set according to the procedures under *Performance Evaluation and Rewards*. The third component, bonuses, is managed in accordance with the subsection on *Performance Bonuses* under *Performance Evaluation and Rewards*.

3. Placement in a Lower Band

An employee whose performance rating is *Unsatisfactory* does not receive the annual adjustment to basic pay. Because the minimum pay rate for each band is increased each year by the amount of the annual adjustment to basic pay, it is possible that the new minimum rate of a band will exceed the basic pay of an employee in that band who does not receive the annual adjustment to basic pay due to unsatisfactory performance. When this happens, the employee is placed in the next lower band. This placement shall not be considered an adverse action under 5 U.S.C. 7512, nor shall grade (i.e., band) retention under 5 U.S.C. 5362 be applicable.

4. Supervisory Pay Differentials

Appropriate supervisory and managerial pay differentials will be provided. Employees who spend at least 25 percent of their time performing supervisory duties will receive supervisory differentials. (Other employees may be approved by the DPMB on a case-by-case basis to receive the supervisory differential.) Supervisory differentials will be considered a part of basic pay.

Upon conversion to the project, all eligible supervisory positions will be placed in the supervisory bands. The incumbents of these positions will be converted at their basic pay (including special rates or locality pay) at the time of conversion, except for Scientific and Engineering (ZP) supervisors, who will begin receiving the added differential upon conversion. New hires into supervisory positions after the date of conversion will have their pay set at the supervisor's discretion within the pay range of the applicable supervisory band.

There will be two types of differentials. The first type will apply to supervisors in the ZP Career Path only. The amount of this type of differential will be fixed at 3 percent or 6 percent, for first and second-level (and higher) supervisors, respectively. The second type of supervisory differential will apply to all bands in all career paths where there are supervisors. Supervisors receiving this type of differential will be eligible for higher pay band ceilings which they may reach through pay for performance. The higher pay band ceilings are set in accordance with the Project Operating Procedures.

The granting of a differential is not considered a promotion or a competitive action. The differential is canceled when an employee's supervisory responsibilities are discontinued. The cancellation of a supervisory differential does not constitute an adverse action, and there is no right of appeal under 5 U.S.C. Chapter 75. Pay retention under 5 U.S.C. 5363 is not applicable. Before entering a supervisory position, an employee will be required to sign a statement certifying that the employee understands that the differential will be canceled when the employee ceases to be a supervisor.

5. Pay and Compensation Ceilings

The maximum rate for a band (excluding special bands established to allow for the supervisory pay differential) will be equal to the maximum rate—GS rate, locality rate, or special rate, as applicable—payable to GS employees for the grades corresponding to the band. An employee's basic pay may not exceed the maximum rate of the employee's band (including a supervisory band), except for employees receiving retained rates of pay.

An employee's rate of basic pay payable under any pay band may not exceed the rate of basic pay payable for Level IV of the Executive Schedule. An employee's aggregate monetary compensation for a calendar year may not exceed the basic rate of pay for Level I of the Executive Schedule, as required by 5 U.S.C. 5307 and (OPM) regulations in Subpart B of 5 CFR 530.

6. Locality Pay

Locality pay is implemented as basic pay for all purposes except as otherwise provided in this plan. The locality adjustment will be applied to the minimum and maximum rates of each band. For bands affected by special rates, the maximum rate will be the higher of the special rate and the locality rate. A locality adjustment may be applied to an eligible employee's basic pay only to the extent that it does not cause the employee's basic pay to exceed the maximum rate of the band.

7. Special Salary Rates

When appropriate, special salary rates will be used to determine employees' maximum pay rates in lieu of the normal pay band ceilings. The provisions of current regulations (5 CFR 530.303) will be followed to determine the appropriateness of special salary rates. As provided for under these regulations, special salary rates will be restricted to occupations and/or geographic locations for which there is an existing or likely difficulty in the recruitment or retention of well-qualified personnel.

8. Effect of General and Locality Pay Increases on Bands

The minimum and maximum rates of each band will be increased at the time of a general pay increase under 5 U.S.C. 5303 and/or a locality pay increase under 5 U.S.C. 5304 or 5304a so that they equal the new locality-adjusted minimum and maximum rates of the grades corresponding to the band. The maximum rates of bands set according to special rates, however, may exceed this amount to the extent necessary to equal the 10th step of the appropriate special rate scale if that rate is higher.

9. Effect of General and Locality Pay Increases on Individual Pay

Only employees with a current annual performance rating of record of *Eligible* may receive an increase in their basic pay at the time of band adjustments. This increase in basic pay will reflect any applicable general and/or locality pay increase for General Schedule employees. The increase in basic pay for eligible employees whose basic pay is at the ceiling of their band will equal the increase in the ceiling.

The basic pay increase for eligible employees whose basic pay is below the ceiling of their band will be calculated by applying two factors to the employee's rate of pay. One factor is the general increase factor representing the increase in General Schedule rates under 5 U.S.C. 5303 (e.g., 1.02 if the general increase is 2 percent). The second factor is the locality pay increase factor, which is derived by dividing the newly applicable locality pay percentage factor by the formerly applicable locality pay percentage factor. (For example, if the locality payment percentage for an area increased from 4.23 percent to 5.48 percent, the locality pay increase factor

would be 1.0548 divided by 1.0423, or approximately 1.012.) Thus, the new rate of basic pay would be calculated using the following formula:

$$\text{new pay rate} = \text{general increase factor} \times \frac{1 + \text{newly applicable locality pay percentage}}{1 + \text{formerly applicable locality pay percentage}} \times \text{former pay rate}$$

However, a basic pay increase will be applied only to the extent that it does not cause an employee's basic pay to exceed the ceiling of the applicable band.

10. Basic Pay

Employees covered by the project will not have separate basic pay rates and locality pay rates, as do General Schedule employees. Project basic pay rates will be basic pay for all purposes, except as specifically provided in the demonstration project plan.

11. Pay Setting Upon Promotion

The new basic pay rate upon promotion may be set at any level in the new band (If the move is to a different career path, any band in the new path would be considered a ''new band.''), except that the minimum pay increase upon promotion is 6 percent. The maximum percentages allowed upon promotion are described in the Project Operating Procedures.

12. Pay Setting for New Hires

The setting of initial salaries within bands for new appointees will be flexible, particularly for hard-to-fill positions in the Scientific and Engineering Career Path. Supervisory guidance on setting pay for new hires is included in the Project Operating Procedures.

13. Conversion of Employees From the General Schedule to the Demonstration System

For employees being converted from the GS pay system to the demonstration project, GS grades will translate directly to the project's career path and band structure. Employees will be converted at their current highest rate under the GS pay system (i.e., highest of locality rate or special rate or similar rate) at the time of conversion, except for supervisors in the Scientific and Engineering Career Path who qualify for a supervisory/managerial pay differential upon conversion. No one's salary will be reduced as a result of the conversion. When conversion of an employee into the project is accompanied by a geographic move, the employee's GS pay entitlements (including any locality rate or special rate) in the new area will be determined before converting the employee's pay to the demonstration project pay system.

At the time of conversion, each converted employee will be given a lump-sum cash payment for the time credited to the employee toward what would have been the employee's next within-grade increase. The payment for a General Schedule employee will be computed by (1) calculating the ratio of (a) the number of days the employee will have spent in the employee's current rate through the day prior to the day of conversion, to (b) the total number of days in the employee's current waiting period for a regular within-grade increase (364, 728, or 1092 days), and (2) multiplying that ratio by the dollar value of the employee's next within-grade increase, as in effect at the time of conversion.

14. Movement of GS Employees From Other Organizations to the Demonstration System

GS employees can move into the project from other organizations through transfer, reassignment, promotion, or new appointment. When the movement is by lateral transfer or lateral reassignment, the employee's GS grade will translate directly to the project's career path/band structure and the employee's rate of basic pay under the demonstration project will equal his or her current highest rate under the GS pay system (i.e., highest of locality rate or special rate or similar rate), except for the addition of a supervisory differential if the position is a supervisory position in the Scientific and Engineering Career Path. When a lateral transfer or lateral reassignment is accompanied by a geographic move, the employee's GS pay entitlements (including any locality rate or special rate) in the new area will be determined before converting the employee's pay to the demonstration project pay system. When the movement is by new appointment, promotion, reassignment with pay adjustment (through merit assignment plan competition), or transfer to ''higher grade'' (i.e., to a band higher than the band that corresponds to the employee's current GS grade, the new pay rate is set according to project pay setting flexibilities for new hires and promotions.

15. Pay Setting Upon Movement of an Employee to a Different Pay Area

Employees who move (voluntarily or involuntarily) from one geographic area to another within their operating unit will have their pay adjusted to account for any change in the band maximum rates between the two areas. This adjustment ensures that the employee's relative position in the band (measured as a percentage of the band maximum rate) will be maintained upon movement. The pay rate in the new area will be derived using the following formula:

$$\text{new pay rate} = \text{general increase factor} \times \frac{1 + \text{newly applicable locality pay percentage}}{1 + \text{formerly applicable locality pay percentage}} \times \text{former pay rate}$$

The new pay rate is calculated before any other simultaneous pay action (e.g., general pay adjustment or promotion effective on the same date). Any reduction in pay solely attributable to a movement from one pay area to a lower-paying area shall not be considered a reduction in basic pay under the adverse action provisions of 5 U.S.C. 7512(4) or under the pay retention provisions of 5 U.S.C. 5363. (The employee retains the right to grieve or file a complaint regarding a geographic reassignment if there is an allegation of a violation of nondiscrimination statutes or a prohibited personnel practice.)

16. Severance Pay

(OPM) severance pay regulations (5 CFR 550.703) will be applied to the project by substituting ''one band'' for ''two grades'' and ''two grades or pay levels.''

17. Grade and Pay Retention

Grade and pay retention will follow current law and regulations, except as allowed by specific waiver (e.g., ''career path and band'' for ''grade''). Specific waivers are listed in the section entitled *Authorities and Waiver of Laws and Regulations Required*.

*E. Performance Evaluation and Rewards*

1. Introduction

The most important feature of the performance evaluation system is that it is based on the application of a weighted 100-point scoring system in support of pay for performance. As in the current system, each employee has an individual performance plan composed of several performance elements. Through application of benchmark performance standards and a 100-point scoring system, supervisors rank employees by performance within peer groups and grant performance pay increases according to the ranking. Highly ranked employees within a peer group receive relatively high pay increases and lower ranked employees receive relatively lower pay increases.

The performance appraisal process is intended to (1) promote good performance; (2) encourage a continuing dialogue between supervisors and employees on organizational objectives, supervisory expectations, employee performance, employee needs for assistance and guidance, and employee development; and (3) provide a basis for performance-related decisions in employee development, pay, rewards, assignment, promotion, and retention. The system will more effectively communicate to employees how they are performing in relation to their peers, the consequences of poor performance, and the rewards for good performance.

Performance-based pay increases give an operating unit the ability to raise the pay of good performers more rapidly, thus improving retention of good performers. The promise of higher pay increases for good performance will encourage achievement and promote the objective of improved individual and organizational performance.

2. Coverage

All employees covered by the project will be covered by the project performance evaluation and rewards system, except that the Departmental Personnel Management Board may remove from the system any position not filled by career or career conditional appointment. ST–3104 employees will have their performance evaluated under the structure of the performance evaluation system and may receive bonuses, but do not receive performance pay increases. Members of the Senior Executive Service will remain under the non-demonstration DoC SES performance appraisal, pay, and bonus system.

Upon conversion to the demonstration project, any administrative action already initiated under a previous appraisal program will continue to be processed in accordance with the requirements and procedures of the program in effect when the action was initiated.

3. Performance Cycle

The performance year begins October 1 and ends September 30. The stages of the performance cycle are performance planning, performance review, performance appraisal, and performance-related decisions.

4. Performance Plans

Performance plans will be developed each year by supervisors with input from employees. Critical performance elements will be established for each position. (All elements are critical.) The supervisor weights each element so that the total weight of all elements is 100 points. Benchmark performance standards define the range of performance. A supervisor may add supplemental standards to a performance plan to further elaborate on the benchmark performance standards.

5. Mid-Year Review

A required mid-year review addresses mid-year accomplishments, performance successes and deficiencies, and any need for performance plan modifications. Additional reviews may be held as needed.

6. Performance Appraisal

Performance appraisals bring supervisors and employees together to discuss performance and accomplishments during the performance year. The appraisals lead to decisions by supervisors and Pay Pool Managers on performance scores, performance ratings, performance pay increases, and bonuses. Performance appraisal is scheduled for the final weeks of the performance year. However, at any time of the year, a supervisor may determine that an employee's performance is not satisfactory on one or more critical elements and place the employee on a Performance Improvement Plan.

7. Performance Ratings

The demonstration project performance ratings are Eligible (for performance pay increase, bonus, and annual adjustment to basic pay) and *Unsatisfactory*. The rating *Eligible* covers the same performance range as the former ratings of Marginal, Fully Successful, Commendable, and Outstanding. *Unsatisfactory* covers the same performance range as the former ratings of Unsatisfactory and Unacceptable. An employee whose performance is unsatisfactory is placed on a performance improvement plan and given an opportunity to improve before a final rating is assigned.

8. Performance Scores

Each element is evaluated individually against the benchmark performance standards and any supplemental standards. If a single element in an employee's plan is rated *Unsatisfactory*, the overall rating is *Unsatisfactory* and there is no performance score. If all elements meet at least the minimally acceptable benchmark, the overall rating is *Eligible*. Rating Officials score the performance of employees rated *Eligible* on a 100-point scale, which corresponds to the 100-point element weight scale. An individual element score may be as high as the weight of that element. The total performance score is the sum of the element scores. A perfect score on each element would produce a total score of 100 points.

9. Performance Ranking

Employees are ranked, by performance score, within a peer group. A peer group may involve no more than one career path, but may be otherwise organized by any combination of organization, occupation, band, or appointment type. Rating Officials rank their own employees, then Pay Pool Managers interleave the rankings of subordinate Rating Officials to produce peer group rankings at the pay pool level. A Pay Pool Manager is a line manager who manages his or her organization's pay increase and bonus funds and has final decision authority over the performance scores, performance pay increases, and bonuses of subordinate employees.

10. Performance Pay Decisions

The Performance Pay Table divides each band into three segments or *intervals*. Each interval is linked to a range of potential percentage pay increases beginning at zero and progressing to a maximum percentage pay increase. The maximum performance pay increase an employee may receive, therefore, depends on the interval into which the employee's salary falls. The Pay Pool Manager makes a performance pay decision for

each employee in a peer group, based on the Pay Pool Manager's ranking and the pay increase ranges in the Performance Pay Table. Within a peer group, an employee may not receive a higher proportion-of-range than a higher-ranking employee or a lower proportion-of-range than a lower-ranking employee. Proportion-of-range is the percentage of the maximum pay increase allowed for a particular interval of a pay band, i.e., a percent of a percent. For example, if the pay increase range for the pay interval is 0–12 percent, and the employee receives a 9 percent increase, that employee receives a proportion-of-range that equals 75 percent of the maximum 12 percent.

11. Performance Bonuses

Bonuses are the only cash awards directly linked to the project performance appraisal system, and are awarded at the end of the performance year in conjunction with decisions on performance pay increases. A Pay Pool Manager may award a bonus to any employee with an *Eligible* rating. The OPMBs will determine the bonus authority to be delegated to their pay pool managers.

Bonuses address two objectives. First, the ability to reward the accomplishments of good performers will make them more likely to remain, thus improving the retention of high achievers. Second, the promise of bonuses for achievement will encourage improved individual performance.

12. Action Based on Unsatisfactory Performance

If, after an opportunity to improve, an employee's performance is still not satisfactory, the operating unit will give a rating of *Unsatisfactory* and must take action to reassign or remove the employee, or place the employee in a lower band, in accordance with performance action provisions in law and regulation.

## IV. Conversion or Movement From a Project Position to a General Schedule Position

If a DoC Demonstration Project employee moves to a General Schedule position, the following procedures will be used to convert the employee's project pay band to an equivalent GS grade and the employee's project rate of pay to equivalent GS rates of pay. The converted GS grade and rates of pay must be determined before movement out of the project and any accompanying geographic movement, promotion, or other simultaneous action. For lateral reassignments and lateral transfers, the converted GS grade and rates of pay will become the employee's actual GS grade and rates of pay, unless immediately affected by a simultaneous geographic movement or another pay action. For non-lateral transfers, promotions, and other actions, the converted GS grade and rates of pay will be deemed to be the employee's grade and rates of pay at the time of movement out of the project and will be used in applying applicable pay setting rules (e.g., promotion rules.)

*A. Grade-Setting Provisions*

An employee in a band corresponding to a single GS grade is converted to that grade. An employee in a band corresponding to two or more grades is converted to one of those grades according to the following rules:

1. The employee's project basic rate of pay is compared with step 4 rates in the highest applicable GS rate range (including a rate range in the GS base schedule, a rate range in the applicable locality rate schedule, or a rate range in a special rate schedule for the employee's occupation). If the series is a two-grade interval series, only odd-numbered grades are considered below GS–11.

2. If the employee's pay rate equals or exceeds the applicable step 4 rate of the highest GS grade in the band, the employee is converted to that grade.

3. If the employee's pay rate is lower than the applicable step 4 rate of the highest grade, the pay rate is compared with the step 4 rate of the second highest grade in the employee's band. If the employee's pay rate equals or exceeds step 4 of the second highest grade, the employee is converted to that grade.

4. This process is repeated for each successively lower grade in the band until a grade is found in which the employee's rate of basic pay equals or exceeds the applicable step 4 rate of the grade. The employee is then converted at that grade. If the employee's rate of pay is below the step 4 rate of the lowest grade in the band, the employee is converted to the lowest grade.

5. Exceptions: (1) If the employee's pay rate exceeds the maximum rate of the grade assigned under the above-described ''step 4'' rule but fits in the rate range for the next higher applicable grade in the band (i.e., between step 1 and step 4), then the employee shall be converted to that next higher applicable grade; (2) An employee will not be converted to a lower grade than the grade held by the employee immediately preceding a conversion, lateral reassignment, or lateral transfer in the project unless since that time the employee has undergone a reduction in band; (3) In Band I of the ZP and ZA Career Paths, students without a bachelor's degree or comparable experience are converted no higher than GS–4.

*B. Pay-Setting Provisions*

An employee's pay within the converted GS grade is set by converting the project rate to GS pay rates in accordance with the following rules:

1. The pay conversion is done before any geographic movement or other pay-related action that coincides with the employee's movement out of the demonstration project.

2. An employee's project rate is converted to a rate on the highest applicable rate range for the converted GS grade (including a rate range in the GS base schedule, a rate range in the applicable locality rate schedule, or a rate range in a special rate schedule for the employee's occupation).

3. If the highest applicable rate range is a locality pay rate range, the project rate is converted to a GS locality rate of pay. If this rate falls between two steps in the locality-adjusted schedule, the rate must be set at the higher step. The converted GS rate of basic pay is the GS base rate corresponding to the converted GS locality rate (i.e., same step position). (If this employee is also covered by a special rate schedule as a GS employee, the converted special rate will be determined based on the GS step position. This underlying special rate will be basic pay for certain purposes for which the employee's higher locality rate is not basic pay.)

4. If the highest applicable rate range is a special rate range, the project rate is converted to a special rate. If this rate falls between two steps in the special rate schedule, the rate must be set at the higher step. The converted GS rate of basic pay will be the GS rate corresponding to the converted special rate (i.e., same step position).

5. Exception: If an employee's project rate exceeds the maximum rate of the highest applicable rate range upon conversion to the General Schedule, the affected employee's project rate will be converted to a retained rate under 5 U.S.C. 5363. If an employee is entitled to a special rate under the General Schedule, the project rate is converted directly to a retained rate. If an employee is only entitled to locality pay under the General Schedule, the retained rate is derived by dividing the project rate by the applicable locality pay factor (i.e., 1 plus the locality payment percentage). Thus, the locality-adjusted retained rate will equal the project rate the employee had been receiving before conversion. Since the

employee's total rate of pay is not reduced upon conversion, this change to converted rates under the General Schedule will not be considered a reduction in basic pay under 5 U.S.C. 5363 or 7512.

6. After conversion or movement out of the demonstration project, an employee's converted GS rates will be used in applying GS pay administration rules, as necessary, in lieu of using his or her demonstration project rate. Thus, for example, the converted GS rate of basic pay (or converted special rate, if applicable) will be used in applying GS rules for promotions, maximum payable rate determinations, and pay retention, as appropriate. For conversions upon termination of the project and for lateral reassignments, the converted GS rates will become the employee's GS rates immediately after movement out of the demonstration project (before processing any accompanying geographic move).

**V. Budget Discipline**

Each project operating unit will maintain compensation during the project at the level it would have reached under the current system. Current costs will be reallocated to cover project costs. To ensure appropriate carryover of costs from pre-project to project years, a base assessment will be made using three base years: Fiscal Years 1994, 1995, and 1996. Budget discipline will be required and achieved by imposing specific funding principles (described in detail in the section on *Funding Pools for Performance Pay Increases and Bonuses*). Finally, both longitudinal and site comparisons will be used to ensure that spending remains within acceptable limits.

*A. Reprogramming Costs*

The following actions and their costs will be eliminated by the new system:

1. Promotions from one grade to a higher grade where both grades are now in the same broad band. For example, because Band III of both the ZP and ZA career paths will cover the same pay range as current grades GS–11 and GS–12, there will be no more promotions from GS–11 to GS–12.

2. Regularly scheduled Within-Grade Step Increases and Quality Step Increases. There are no steps in the broad band system. These actions will be eliminated.

3. Cash awards related to the performance appraisal cycle (These funds will be applied to bonus pools only—not to pay pools).

The cost savings from eliminating these actions will be used to finance the following new actions:

—Performance-based pay increases within bands, including the ability to increase the pay of supervisors, through performance-based pay increases, to a higher level than under the current system. There is no guaranteed performance pay increase in the proposed system, however, for *Eligible* performance; and
—Performance bonuses.

*B. Base Cost Assessment*

In order to determine whether project costs are being maintained at acceptable levels, a base assessment of pre-project costs will be needed. Costs will be computed as annual averages over three pre-project years: Fiscal Years 1994, 1995, and 1996. The costs of all personnel actions of types that are being replaced by project systems will be totaled and averaged.

*C. Funding Pools for Performance Pay Increases and Bonuses*

The results of the base cost assessment will provide a basis for: (1) setting maximum spending limits; and (2) constructing performance pay increase and bonus funding pools by organization, career path, band, and salary. Performance pay pools for project employees will be subject to the same budgetary constraints and reductions imposed on other Department funding allocations. Neither allocations nor authorizations convey funding. Therefore, managers will be required to make payout decisions tied to their individual budgets, within allocations. The following principles will be observed:

1. In terms of career paths and bands, costs will be kept for the most part where they are found in the base assessment. That is, base costs for promotions, within-grade increases, and cash awards in a particular band and career path will form the basis for project spending in the same band and career path.

2. Formulas will be devised to authorize pay increase and bonus pools up to the limits calculated from base-year spending. For each pool, the authorized spending ceiling will depend on the number of employees in the pool by career path, band, and salary.

3. No allocation will be placed in performance pay increase pools for employees who are not eligible for a performance pay increase, such as those who have insufficient time in the position to be rated and those whose salaries are at the ceilings of their bands. No money will be placed in bonus pools for employees not eligible for a bonus, such as those not eligible for a performance rating or who are not on the payroll the last day of the performance cycle.

4. The potential size of performance pay increases will be relatively high for employees whose salaries are near the minimum rate of the band and relatively low for those whose salaries are near the maximum rate of the band. This arrangement imposes a reduced rate of salary increases as an individual advances in the band, similar to the reduced rate of within-grade increases in a General Schedule grade imposed by the one-year, two-year, and three-year waiting periods.

5. There will be no guaranteed performance pay increase in the proposed system. An employee with an *Eligible* performance rating may, if ranked at or near the bottom of a peer group, get no performance pay increase.

6. Although Pay Pool Managers will not be allowed, under normal circumstances, to exceed their allocated pay increase and bonus pools, they will be allowed to spend less than the full amounts of their pools.

7. Funds previously used to pay cash awards will be applied to bonus pools only—not to performance pay pools.

*D. Budget Monitoring*

These procedures permit changes in operating unit expenditures which result from legislatively mandated program changes and changes in Federal pay and benefits. The operating units may offset selected salary increases with savings by reducing turnover, eliminating unnecessary overhead, and cutting other personnel costs.

The operating units will measure their adherence to cost control by preparing budget estimates based on prescribed Federal budget processes and monitoring actual spending under the project against this budget estimate. Two cost comparisons will be used:

1. Longitudinal Comparisons

a. Project costs will be calculated on an established schedule.

b. Costs will be compared against the spending limits calculated from the base years to ensure that budget limitations are not being exceeded.

c. Each year, the funding of the performance pay increase and bonus pools will be used as an opportunity to ''balance the books.'' That is, the funding of the pools will be limited to the amount that is judged to maintain budget discipline.

2. Site Comparisons

a. A number of non-project units will be selected from within the Department to serve as comparison sites. The comparison sites will be selected to reflect, as nearly as possible, the missions and workforces of the project units.

b. Periodically, the rate of increase in salaries in the project units will be compared to the rate of increase in salaries in the comparison units.

c. When it is found that salaries in project units are outpacing salaries in comparison units, and the differences cannot be explained by non-project variables, appropriate adjustments will be made in project funding.

## VI. Project Evaluation

The Department will arrange for periodic evaluations of the project under an OPM-approved evaluation plan. The evaluation will be designed to determine whether the interventions are achieving the goals and objectives of the project within acceptable cost limits. (See *Costs.*)

The following table lays out the project evaluation model, beginning with and flowing from the objectives that the project is designed to achieve. The Objective column and the Intervention column together serve as the project hypotheses; i.e., the hypotheses to be tested are that the objectives will be achieved by the interventions linked to them. Most objectives are linked to more than one intervention. Each intervention is associated with at least one expected result. The Measures column lists the means by which the actual results will be measured, and the Data Sources column shows where the data required for the measurements can be found.

A hypothesis will be supported—that is, the intervention will be deemed to have achieved the objective—when actual results are found to match expected results.

TABLE 5.—PROJECT EVALUATION MODEL

| Objectives | Interventions | Expected results | Measures | Data sources |
|---|---|---|---|---|
| Increased quality of new hires; improved fit between position requirements and individual qualifications; greater likelihood of getting a highly qualified candidate. | Agency-Based Staffing ..... | Hiring officials will be able to focus on more relevant recruiting sources and avoid losing candidates who grow impatient with long hiring processes. | • Hiring officials' judgments of the improvement in the quality of new hires.<br>• Hiring officials' judgments of improvements in the fit of qualifications of new hires.<br>• Rate of acceptance of offers. | • Interviews with hiring officials.<br>• Focus groups.<br>• HRM office records on offers and acceptances.<br>• Periodic employee/ supervisor surveys.<br>• Exit interviews. |
| | Direct Examination ..... | For skill areas in which well qualified individuals are hard to find, managers will be able to hire good candidates as they find them, thus avoiding the loss of well qualified individuals through delays. | • Hiring officials' judgments of the improvement in the quality of new hires.<br>• Hiring officials' judgments of improvements in the fit of qualifications of new hires.<br>• Rate of acceptance of offers. | Interviews with hiring officials.<br>• Focus groups.<br>• HRM office records on offers and acceptances.<br>• Periodic employee/ supervisor surveys. |
| | Broad-band Classification System, in conjunction with Flexible Entry Salaries. | Broad bands and flexible entry salaries within bands provide a more competitive range of entry salaries for managers to use in negotiating with candidates, thus increasing the ability to hire highly qualified candidates. | • Hiring officials' judgments of the improvement in the quality of new hires.<br>• Hiring officials' judgments of improvements in the fit of qualifications of new hires.<br>• Rate of acceptance of offers. | • Interviews with hiring officials.<br>• Focus groups.<br>• HRM office records on offers and acceptances.<br>• Periodic employee/ supervisor surveys. |
| | More Flexible Paid Advertising. | Managers will be able to make greater use of paid advertising, thus expanding the scope of recruiting efforts or focusing the recruitment effort on specialized sources. | Number of selections resulting from paid advertising. | HRM office records. |
| | 3-Year Probationary Period for Scientists and Engineers. | Greater likelihood that scientists and engineers who are retained after probation will be capable of the full range of R&D functions. | Number of scientists and engineers released during probation after the first year. | • Automated history file data.<br>• HRM office records. |
| | Local Authority for Recruitment Payments. | The ability of managers to grant recruitment payments during negotiations with highly qualified candidates will increase competitiveness. | Number of selections made for which the recruitment payment was instrumental in attracting the candidate. | • HRM office records.<br>• Interviews with hiring officials.<br>• Focus groups. |

TABLE 5.—PROJECT EVALUATION MODEL—Continued

| Objectives | Interventions | Expected results | Measures | Data sources |
|---|---|---|---|---|
| Increased retention of good performers. | Broad-Band Classification System. | Broad-banding gives an operating unit the ability to raise the pay of good performers to higher and *more competitive levels,* thus improving retention of good performers. | Turnover rates among good performers.<br>Turnover rates of low performers. | Automated history file data. |
| | Performance-Based Pay Increases. | Performance-based pay increases give an operating unit the ability to raise the pay of good performers *more rapidly,* thus improving retention of good performers. | Turnover rates among good performers. | • Automated history file data.<br>• Interviews with hiring officials.<br>• Focus groups. |
| | Bonuses ..... | The ability to reward the accomplishments of good performers will make them more likely to remain. | Turnover rates compared to size of bonus. | Automated history file data. |
| | Local Authority for Retention Payments. | The ability of managers to grant retention payments will improve their ability to retain employees in critical skill areas in a job-related course of study. | A count of the instances in which a retention payment is instrumental in retaining an employee who would otherwise have left. | • HRM office records.<br>• Interviews with hiring officials.<br>• Focus groups. |
| | Supervisory Pay Differentials. | The ability to raise the pay of high-performance supervisors to higher levels will make their salaries more competitive, improving retention. | Turnover rates among supervisors in relation to pay and performance. | Automated history file data. |
| | More Flexible Pay Increase Upon Promotion. | Flexible pay increases upon promotion gives an operating unit the ability to raise the pay of high-performing employees and employees in critical skill areas to higher and more competitive levels, thus improving their retention. | Turnover rates in relation to pay and performance. | Automated history file data. |
| Improved individual and organizational performance. | Two-Level, 100-Point, Peer Group Performance Appraisal System. | This system will more effectively communicate to employees how they are performing in relation to their peers, the consequences of poor performance, and the rewards for good performance. | Judgments of Pay Pool Managers, Rating Officials, and Employees. | • Interviews with hiring officials.<br>• Periodic employee/ supervisor surveys.<br>• Focus groups. |
| | Pay Increases Linked to Performance. | The promise of higher pay increases for high achievement will encourage improved performance. | Judgments of managers, supervisors, and employees. | • Periodic employee/ supervisor surveys.<br>• Focus groups. |
| | Supervisory Pay Differentials. | The promise of higher pay levels for effective supervision will encourage improved supervisory performance. | Judgments of higher-level managers. | • Management interviews. |
| | Bonuses Linked to Performance. | The promise of bonuses for good performance will encourage improved performance. | Judgments of managers, supervisors, and employees. | • Periodic employee/ supervisor surveys.<br>• Focus groups. |
| | Hiring Interventions (listed above). | By improving the quality of new hires, the hiring interventions will gradually produce a higher-performing workforce. | Judgments of managers and supervisors. | • Interviews with hiring officials.<br>• Focus groups. |

TABLE 5.—PROJECT EVALUATION MODEL—Continued

| Objectives | Interventions | Expected results | Measures | Data sources |
|---|---|---|---|---|
| | Retention Interventions (listed above). | By improving the retention of good performers, the quality of the workforce will be higher than it otherwise would be. | Judgments of managers and supervisors. | • Interviews with hiring officials.<br>• Focus groups. |
| More effective human resources management. | Broad-Band Classification | The broad-band classification system will be simpler to use, more understandable to managers and employees, and more accurate. | Judgments of managers, supervisors, and employees. | • Interviews with managers.<br>• Periodic employee/ supervisor surveys. |
| | Delegated Classification Authority to Managers. | Line managers understand the organizational mission and the work related to the mission and are therefore better prepared to classify the work. | Judgments of managers and supervisors. | • Interviews with hiring officials.<br>• Periodic employee/ supervisor surveys.<br>• Focus groups. |
| | Delegated Pay Authority to Managers. | Line managers are in a better position to understand the labor market forces related to the work they manage and will therefore be more effective pay managers. | Judgments of managers and supervisors. | • Interviews with hiring officials.<br>• Focus groups. |
| More efficient human resources management. | Automated Broad-Band Classification System. | The broad-band classification system will be simpler, faster, easier to automate, require fewer resources to operate, and involve fewer classification decisions. | • Judgments of managers and supervisors.<br>• Time required to produce position descriptions and classify positions.<br>• Number of classification decisions. | • Interviews with hiring officials.<br>• Periodic employee/ supervisor surveys.<br>• Focus groups.<br>• HRM office records.<br>• Automated history file. |

## VII. Project Management

The Office of Personnel Management will oversee the project under its demonstration project authority in 5 U.S.C. 4703. The DoC Departmental Personnel Management Board will manage the project at the Department level.

Each major operating unit will have its own Operational Personnel Management Board to oversee local operations. The following table lists the separate responsibilities of these three bodies.

TABLE 6.—PROJECT AUTHORITIES

| Arena | Project authorities | | |
|---|---|---|---|
| | OPM | DPMB | OPMB |
| General | • final approval authority for the Project Plan, Implementing Regulations, and any future changes to the plan or implementing regulations. | • approval authority within the Department for the Project Plan and Implementing Regulations.<br>• approval authority within the Department for proposing changes in the Project Plan or Implementing Regulations to (OPM).<br>• monitoring the success of project interventions so as to propose appropriate mid-course corrections to (OPM).<br>• setting project policies within the parameters of the Project Plan and Implementing Regulations.<br>• delegating authority to OPMBs, including the withdrawal of authority when warranted.<br>• exercising the authority to make exceptions to normal project procedures on a case-by-case basis when it believes an exception is warranted (the OPMBs will not have this authority).<br>• assuring adequate resources for designing, implementing, and operating the project.<br>• establishing a training plan to train managers, employees, and support staff in project policies and procedures. | • establishing operating unit project guidelines within the Project Plan, Implementing Regulations, and DPMB policies.<br>• management of authorities outlined below and any additional authorities delegated by the DPMB.<br>• delegating authority to managers within the operating unit, including the withdrawal of authority when warranted.<br>• assuring adequate resources for implementing and operating the project within the operating unit.<br>• overseeing training of operating unit managers, employees, and support staff in project policies and procedures. |
| Position Classification | • approval of the project Classification Interventions. | • setting project classification policy within the Project Plan and Implementing Regulations.<br>• approving automated classification systems and classification standards.<br>• approving new occupational series and titles. | • establishing operating unit classification guidelines within the Project Plan, Implementing Regulations, and DPMB policies.<br>• delegating classification authority to operating unit managers.<br>• establishing career ladders.<br>• ensuring proper classification of positions within the operating unit.<br>• resolving issues in operating unit classifications.<br>• approving or delegating the approval of new specialty descriptors. |
| Staffing | • approval of the project Staffing Interventions. | • approving project staffing policies<br>• establishing policy and criteria for recruiting and retention payments.. | • establishing operating unit staffing guidelines within the Project Plan, Implementing Regulations, and DPMB policies.<br>• approving or delegating the approval of individual recruiting and retention payments.<br>• establishing career ladders.<br>• approving use of recruiting services.<br>• delegating and overseeing use of paid advertising.<br>• overseeing the application of the three-year probationary period.<br>• establishing operating unit practices on vacancy distribution, opening time-frames, and similar local issues. |
| Reduction in Force | • approval of the project reduction in force Interventions. | • approving project reduction-in-force policies. | • establishing operating unit reduction-in-force guidelines within the Project Plan, Implementing Regulations, and DPMB policies.<br>• establishing procedures on operating unit competitive levels.<br>• establishing guidelines for, and overseeing, reductions in force within the operating unit. |

TABLE 6.—PROJECT AUTHORITIES—Continued

| Arena | Project authorities | | |
|---|---|---|---|
| | OPM | DPMB | OPMB |
| Pay Administration ... | • approval of the project Pay Administration Interventions. | • approving project pay administration and pay-for-performance policies.<br>• approving project pay tables .....<br>• approving performance pay increase ranges.<br>• approving automated performance pay increase systems.<br>• approving formulas used to develop performance pay increase pools. | • establishing operating unit pay guidelines within the Project Plan, Implementing Regulations, and DPMB policies.<br>• establishing operating unit performance pay increase pools.<br>• establishing operating unit guidelines and delegating approval authorities for setting pay levels for new hires and promotions. |
| Performance Evaluation. | • approval of the project Performance Evaluation Interventions. | • approving project performance evaluation policies.<br>• approving project-wide forms for performance plans and appraisals and for recording outcomes. | • establishing operating unit performance evaluation guidelines within the Project Plan, Implementing Regulations, and DPMB policies.<br>• overseeing the operating unit annual performance appraisal process, from development of plans to individual pay increases and bonuses.<br>• establishing operating unit guidelines on performance elements.<br>• delegating rating, review, and pay pool management authorities. |
| Bonuses ..... | • approval of the project Bonus Interventions. | • approving project bonus policies .....<br>• delegating bonus limits to OPMBs ..... | • establishing operating unit bonus guidelines within the Project Plan, Implementing Regulations, and DPMB policies.<br>• delegating bonus limits to pay pool managers.<br>• establishing operating unit bonus pools. |
| Costs and Budget Discipline. | • approval of the project cost plan. | • approving project budget policies ..... | • establishing and overseeing operating unit budget procedures.<br>• assuring operating unit budget discipline.<br>• designating pay pool managers.<br>• establishing and overseeing the use of operating unit performance pay increase and bonus pools. |
| Project Evaluation .... | • approval of the project Evaluation Model.<br>• clearing annual evaluation reports.<br>• transmitting annual evaluation reports to Congress. | • approving the approach for selecting an evaluator to carry out the annual project evaluation.<br>• assuring adequate resources for project evaluation.<br>• approving project policies for internal Departmental assessments. | • overseeing and assuring operating unit participation in project evaluations, including data collection, focus group participation by operating unit employees, and availability of managers for interviews.<br>• approving objectives and procedures for internal operating unit assessments. |

The DoC Chief Financial Officer/Assistant Secretary for Administration will chair the Departmental Personnel Management Board (DPMB). The DPMB members will be senior managers of the operating units in the project and the DoC Director of Human Resources Management. Each OPMB will typically be chaired by the senior manager designated to serve on the DPMB. The operating units will appoint other key managers to their boards as they think appropriate.

## VIII. Training

The project operating units will schedule training for managers, supervisors, employees, and support staff.

### *A. Manager and Supervisor Training*

The operating units will give managers and supervisors general training in the overall features of the project and specific hands-on training in the new authorities they are to exercise. Computer training facilities will be used to teach managers and supervisors how to use the automated classification system to produce position descriptions. The classification training will emphasize principles of project classification, such as the classification logic embedded in the automated classification system, career path coverage criteria, occupational series definitions and coverage, proper classification by bands in accordance with project classification standards, sound titling practices, and economic and effective position management.

Managers and supervisors will also be given specific training in performance appraisal and pay-for-performance. A key part of this training will be a simulation of the performance evaluation and rewards system prior to the actual end-of-year performance evaluation. Prior to the simulation, each Rating Official and Pay Pool Manager will be trained in the automated performance pay increase system. During the simulation, rating officials and pay pool managers will carry out the appraisal, scoring, rating, and performance pay increase process just as they would at the end of a performance year, but for training purposes only. The results will not be official and will not

be communicated to employees. This training exercise was used in the first year of the NIST project and was found to be an effective approach to revealing and correcting problems and misunderstandings prior to the real end-of-year process.

*B. Employee Training*

Through general presentations, handouts, and direct training from supervisors, employees will be given an understanding of project systems and how those systems affect them.

In the general presentations scheduled for everyone covered by the project, employees will be led through all project systems, from classification to pay administration to pay for performance. As each system is presented, it will be contrasted with the General Schedule system so employees can see how the system is changing and how the changes affect them. The presentations will also cover employee rights and grievance procedures. Employees will be given ample opportunity to ask questions at the presentations and will be given the names and numbers of individuals to call if they have questions later.

In addition to the general presentations that will be scheduled for all employees, supervisors will be instructed to pass along more individualized information about the system in conjunction with the implementation of those systems. For example, at the time supervisors give employees their new project position descriptions, the supervisors will explain the position descriptions, the process that produced them, and the process for keeping them current. Also, at the time of the performance appraisal simulation, supervisors will explain to employees how they fit into the performance scoring and peer-group ranking process and how the process leads to decisions on performance pay increases.

*C. Support Staff Training*

There are three categories of support staff: (1) personnel specialists in the various HRM offices serving project operating units; (2) budget specialists in operating unit budget offices assigned to monitor and advise on budget discipline issues and specifically to assist in establishing performance pay increase and bonus pools; and (3) administrative officers in the operating units, who will assist in processing personnel actions, distributing local performance pay increase and bonus pools, and electronically transmitting pay pool manager decisions to the automated payroll system.

Two of the HRM offices that will serve project operating units have served the NIST Demonstration Project since its implementation in 1988. These two offices will help train personnel specialists in the other HRM offices. Budget specialists in the operating units, besides receiving the general employee training, will receive advice from a NIST budget specialist and will receive further training on the distribution of performance pay increase and bonus pools during the simulation of the performance evaluation and rewards system. Administrative officers will be invited to take part in the supervisory training sessions and will also receive further training during the simulation of the performance evaluation and rewards system.

## IX. Experimentation and Revision

Many aspects of a demonstration project are experimental. Modifications must be made from time to time as experience is gained, results are analyzed, and conclusions are reached on how the system is working. The DPMB, with DoC and OPM approval, will authorize minor modifications, such as changes in the occupational series in a career path, without further notice. Major changes, such as a change in the number of career paths, will require OPM approval and will be published in the Federal Register.

## X. Authorities and Waiver of Laws and Regulations Required

The following waivers of law and regulation are necessary:

*Title 5, U.S. Code*

Section 3308 Competitive Service; examinations; educational requirements prohibited; exceptions
Chapter 51 Classification
Section 5303 Annual adjustments to pay schedules
Section 5304 Locality-based comparability payments
Section 5305 Special Pay Authority
Subchapter III of chapter 53 General Schedule Pay Rates
Subchapter VI of chapter 53 Grade and Pay Retention (Waiver is applicable only to allow the following modifications: (1) using bands in lieu of grades; (2) providing no band retention if reduction in band is caused by employee's pay being exceeded by band minimum rate; (3) providing no pay retention upon reduction in pay caused solely by geographic movement; (4) providing no pay retention upon conversion to the General Schedule as long as the employee's total rate of pay is not reduced; and (5) providing no pay retention upon cancellation of a supervisory differential.)
Section 5753–5754 Recruitment and relocation bonuses; Retention allowances (except that relocation bonuses under Section 5753 continue to apply)
Section 7512(3) Actions covered (Waiver is applicable only to use bands in lieu of grades and to exclude from section 7512(3) reductions in band not accompanied by a reduction in pay, due to the employee's pay being exceeded by the band minimum rate.)
Section 7512 (4) Actions covered (Waiver is applicable only to allow the following modifications: (1) exclude reductions in pay that are solely due to recomputation upon geographic movement; (2) exclude conversions to GS pay that do not result in a reduction in the employee's total rate of pay; and (3) exclude reductions in pay due to the cancellation of a supervisory differential.)

*Title 5, Code of Federal Regulations*

Section 315.801 Probationary period; when required (Waived only for positions in the Scientific and Engineering Career path)
Section 315.802 Length of probationary period (Waived only for positions in the Scientific and Engineering Career path)
Section 351.401 Determining retention standing
Section 351.402 Competitive area in RIF
Section 351.403 Competitive level in RIF
Section 351.504 Credit for performance
Section 351.701 Assignment involving displacement
Part 511 Classification under the General Schedule
Part 530, Subpart C, Special salary rate schedules
Part 531 Pay under the General Schedule
Part 536 Grade and Pay Retention Waived only to allow the following modifications: (1) using bands in lieu of grades; (2) providing no band retention if reduction in band is caused by employee's pay being exceeded by band minimum rate; (3) providing no pay retention upon reduction in pay caused solely by geographic movement; (4) providing no pay retention upon conversion to the General Schedule as long as the employee's total rate of pay is not reduced; and (5) providing no pay retention upon cancellation of a supervisory differential.
Section 550.703 Definition of reasonable offer (Waiver is applicable

only to allow substitution of (1) ''one band'' for ''two grade or pay levels'' and ''two grades'' and (2) ''band'' for ''grade.'')

Part 575, Subpart A, Recruitment bonuses

Part 575, Subpart C, Retention allowances

Section 752.401(a)(3) Coverage, Reductions in grade (Waiver is applicable only to use bands in lieu of grades and to exclude reductions in band not accompanied by a reduction in pay due to the employee's pay being exceeded by the band minimum rate.)

Section 752.401(a)(4) Coverage, Reductions in pay (Waiver is applicable only to exclude reductions in pay that are solely due to recomputation upon geographic movement; (2) exclude conversions to GS pay that do not result in a reduction in the employee's total rate of pay; and (3) exclude reductions in pay due to the cancellation of a supervisory differential.)

[FR Doc. 97–11317 Filed 5–1–97; 8:45 am]

BILLING CODE 6325–01–P

federal register

Friday
May 2, 1997

# Part V

# Department of the Treasury

## Fiscal Service

**31 CFR Part 351**

**Offering of United States Savings Bonds, Series EE; Final Rule**

**DEPARTMENT OF THE TREASURY**

**Fiscal Service**

**31 CFR Part 351**

**[Department of the Treasury Circular, Public Debt Series No. 1–80]**

## Offering of United States Savings Bonds, Series EE

**AGENCY:** Bureau of the Public Debt, Fiscal Service, Treasury.

**ACTION:** Final rule.

**SUMMARY:** This final rule amends the offering circular for Series EE United States Savings Bonds to change the rate structure for Series EE United States Savings Bonds with issue dates of May 1, 1997, or thereafter. The purpose of these changes is to simplify the rate structure for Series EE United States Savings Bonds.

**EFFECTIVE DATE:** May 1, 1997.

**FOR FURTHER INFORMATION CONTACT:** Wallace Earnest, Director, Division of Staff Services, Savings Bond Operations Office, Bureau of the Public Debt, Parkersburg, West Virginia 26106–1328, (304) 480–6319 or through the Internet at wearnest@bpd.treas.gov; or Ed Gronseth, Deputy Chief Counsel, Office of the Chief Counsel, Bureau of the Public Debt, Parkersburg, West Virginia 26106–1328, (304) 480–5192 or through the Internet at egronset@bpd.treas.gov; or Bob Riffle, Attorney-Adviser, Office of the Chief Counsel, Bureau of the Public Debt, Parkersburg, West Virginia 26106–1328, (304) 480–5192 or through the Internet at briffle@bpd.treas.gov. Copies of this amendment can be downloaded from the Internet at the following address: http://www.publicdebt.treas.gov.

**SUPPLEMENTARY INFORMATION:**

### 1. Background

In 1995, Treasury published a new rate structure for Series EE savings bonds with issue dates of May 1995 or thereafter. That rate structure simplified market-based rates and, among other things, eliminated minimum yields (except that redemption values at the date of original maturity—17 years after the date of issue—are not less than the face amount). Based on experience since May 1995, Treasury has determined that it is appropriate to simplify the program further, and to change the rate structure to make savings bonds with issue dates of May 1, 1997, or thereafter, more attractive to savers. These changes include: (1) a rate structure based on 90% of the average of the 5-year Treasury securities yields from the date of issue through original maturity (17 years from the date of issue) and through the final maturity period (17 years to 30 years from the date of issue) unless the terms and conditions applicable to a final maturity period are expressly amended prior to the beginning of such period; (2) a 3-month interest penalty for bonds redeemed prior to five years from the date of issue; and (3) monthly increases in redemption values beginning with the fourth month from the date of issue (due to the 3-month interest penalty) through original maturity (17 years from the date of issue) and through the final maturity period (17 years to 30 years from the date of issue) unless the terms and conditions applicable to a final maturity period are expressly amended prior to the beginning of such period.

Currently, the interest rate on savings bonds for the first five years is 85 percent of the average of 6-month Treasury securities yields (see 31 CFR 351.2(j)(1)(ii) for information on how the short-term rate is determined); and, for holding periods beyond the first five years, the rate is 85 percent of the average of the 5-year Treasury securities yields (see 31 CFR 351.2(j)(1)(iii) for information on how the long-term rate is determined). This final rule provides a new rate structure for Series EE savings bonds issued May 1, 1997, or thereafter. The new rates are 90 percent of the average of 5-year Treasury securities yields from the date of issue through original maturity (17 years from the date of issue).

This final rule includes a 3-month interest penalty for early redemptions to encourage owners to hold their bonds for the longer term. This penalty applies only to owners that redeem their bonds prior to 5 years after the date of issue and would not affect those who hold bonds for 5 years or more. Like other Series EE savings bonds, savings bonds issued May 1, 1997, or thereafter, may be redeemed after six months from the date of issue (31 CFR 351.2(d)); however, the 3-month interest penalty would apply if redeemed prior to 5 years from the date of issue. Redemption values published in tables reflect the 3-month interest penalty for redemptions, if the bonds are redeemed prior to 5 years after the date of issue.

The third feature of the new savings bonds rate structure is the monthly accrual of interest. The new rate structure, taking into account the 3-month interest penalty, provides owners with increases in value every month beginning with the fourth month from the date of issue through original maturity. This contrasts with savings bonds, described in 31 CFR 351.2(h), issued March 1, 1993, through April 1, 1995, in which the redemption values increase on the first day of each month from the third through the sixtieth month after issue, and thereafter either on the first day of each month or on the first day of each successive 6-month period, whichever accrual schedule ensures that the actual yield from issue date to redemption date is in no case less than 4 percent per annum, compounded semiannually.

No changes are being made to the terms and conditions for outstanding Series EE savings bonds with issue dates prior to May 1, 1997, or to the regulations governing the offering of savings notes or Series E, H, and HH savings bonds in 31 CFR Parts 316, 332, and 352.

### II. Summary of Amendments

Section 351.0 is being amended to change the effective date of the offering circular to May 1, 1997.

Section 351.2 is being amended to limit the applicability of paragraph (j) to Series EE savings bonds with May 1995 through April 1997 issue dates.

A new paragraph (k) is added to Section 351.2 to describe terms and conditions for Series EE savings bonds offered for sale on and after May 1, 1997. Paragraph (k) sets forth definitions applied in the determination of values for Series EE savings bonds issued May 1, 1997, or thereafter. The definitions for market yields, base denominations, issue dates, original maturity, and final maturity parallel definitions used in previous offerings of savings bonds (see similar definitions in paragraph (j) for bonds issued May, 1995, through April 1997). In addition, paragraph (k)(1) contains three new definitions:

*Savings bonds rate.* Paragraph (k)(1)(ii) sets forth the definition of savings bonds rate. To determine this rate, Treasury compiles 5-year Treasury securities yields as of the close of business for each day of the previous six months and calculates the monthly average to the nearest one-hundredth of one percent. The savings bonds rate is then determined by taking 90 percent of the 6-month average and rounding the result to the nearest one-hundredth of one percent.

*Accrual dates.* Paragraph (k)(1)(v) sets forth the definition of accrual dates. Interest on a Series EE savings bond accrues on the first day of each month beginning with the fourth month from the date of issue. The redemption value of a bond does not change between these accrual dates.

*Semiannual Rate Periods.* Paragraph (k)(1)(vi) describes the 6-month time periods between the semiannual anniversaries of the date of issue running through original maturity (17 years from the date of issue).

Paragraph (k)(2) sets out an explanation of interest rates and

monthly accruals for savings bonds with issue dates of May 1, 1997, or thereafter. Savings bonds rates are defined in paragraph (k)(1)(ii). This paragraph explains how the savings bonds rates for Series EE savings bonds are determined during the first semiannual rate period beginning on or after the effective date of the rate.

Interest is credited on the first day of each month and compounded semiannually. Interest accrues beginning with the fourth month from the date of issue. *For example,* a bond issued in January has interest first credited on May 1, which represents one month of interest because of the 3-month interest penalty. A table provided in paragraph (k)(2) shows, for any given month of issue with rates announced each May and November, the months making up the semiannual rate period during which interest is earned at the announced rate (disregarding the penalty for bonds redeemed prior to 5 years after the date of issue) and the months in which the bonds increase in value. This rate is an annual rate compounded semiannually.

Paragraph (k)(3) describes a 3-month interest penalty that is applied to bonds issued May 1, 1997, or thereafter that are redeemed prior to 5 years following the date of issue. The overall earning period for these bonds is reduced and the redemption values of such bonds will reflect the 3-month interest penalty. *For example,* if a bond is redeemed 9 months after the date of issue, the redemption value will be determined by applying the redemption value calculation formula described in paragraph (k)(4) and the savings bonds rate for that bond at 6 months after the date of issue. The redemption value of a bond subject to the 3-month interest penalty shall not be reduced below the issue price. This penalty does not apply to bonds redeemed 5 years or more after the date of issue.

Paragraph (k)(4) sets out the formula and definitions for calculation of the redemption value of savings bonds issued May 1, 1997, or thereafter. An example is provided to help explain the redemption value calculations.

Paragraph (k)(5) sets forth how interest rates will be applied during extended maturity periods. From 17 years after date of issue to the final maturity date (30 years after the date of issue), the bond continues to earn interest as described in paragraph (k)(2) unless the terms and conditions applicable to a final maturity period are expressly amended prior to the beginning of such period.

Paragraph (k)(6) sets out the finality of the Secretary's determination of market yields, savings bonds rates, extended maturity period rates and redemption values.

Paragraph (k)(7) sets out the availability of redemption tables and states that redemption values reflect penalties for early redemptions, where applicable because bonds are held less than 5 years after the date of issue.

Section 351.9 is being revised by replacing the current description of the savings bonds education feature with a brief paragraph that refers the reader to authoritative IRS publications.

The heading of Table 3 appended to 31 CFR Part 351 is amended to replace the March 1, 1993, date with March 1, 1993, through April 1, 1995.

## Procedural Requirements

It has been determined that this Final Rule is not a significant regulatory action as defined in Executive Order 12866. Therefore, an assessment of anticipated benefits, costs and regulatory alternatives is not required.

This rule relates to matters of public contract. The notice and public procedures requirements of the Administrative Procedure Act are inapplicable, pursuant to 5 U.S.C. 553(a)(2). As no notice of proposed rulemaking is required, the provisions of the Regulatory Flexibility Act (5 U.S.C. 601, *et seq.*) do not apply.

There are no collections of information required by this Final Rule, and, therefore, no approval pursuant to the Paperwork Reduction Act, is required.

## List of Subjects in 31 CFR Part 351

Bonds, Government Securities.

Dated: April 28, 1997.

**Gerald Murphy,**

*Fiscal Assistant Secretary.*

For the reasons set forth above, Part 351 of Title 31, Chapter II of the Code of Federal Regulations is amended as follows:

## PART 351—OFFERING OF UNITED STATES SAVINGS BONDS, SERIES EE

1. The authority citation for Part 351 continues to read as follows:

**Authority:** 5 U.S.C. 301; 12 U.S.C. 391; 31 U.S.C. 3105.

### § 351.0 [Amended]

2. Section 351.0 is amended, in the second sentence, by removing ''May 1, 1995'', and adding in its place ''May 1, 1997''.

### § 351.2 [Amended]

3. Section 351.2 is amended as follows:

A. In paragraph (j), the heading is amended by removing the words ''May 1, 1995, or thereafter'' and adding in its place ''May 1, 1995, through April 1, 1997'';

B. In paragraph (j)(1), the introductory text is amended by removing the words ''May 1, 1995, and thereafter'' and adding in its place ''May 1, 1995, through April 1, 1997'';

C. Paragraph (j)(1)(vi) is amended by removing the words ''May 1, 1995, and thereafter'' and adding in its place ''May 1, 1995, through April 1, 1997'';

D. Paragraph (j)(2) is amended by removing the words ''May 1, 1995, or thereafter'' and adding in its place ''May 1, 1995, through April 1, 1997'';

E. Paragraph (j)(3) is amended by removing the words ''May 1, 1995, or thereafter'' and adding in its place ''May 1, 1995, through April 1, 1997''.

F. A new paragraph (k) is added to § 351.2 to read as follows:

### § 351.2 Description of bonds.

* * * * *

(k) *Interest rate and redemption values—bonds bearing issue dates of May 1, 1997, or thereafter.*

(1) The following definitions apply for determining the interest rates and redemption values for bonds bearing issue dates of May 1, 1997, or thereafter:

(i) *Market yields.* Treasury uses market bid yields for bills, notes, and bonds to create a yield curve based on the most actively traded Treasury securities. This curve relates the yield on a security to its time to maturity. Yields at particular points on the curve are referred to as ''constant maturity yields'' and are determined by the Treasury from this daily yield curve. The 5-year Treasury securities yields described below are derived from these yield curves.

(ii) *Savings bonds rate.* No less frequently than on each May 1 and November 1, Treasury announces a variable market-based savings bonds rate. To determine this rate, Treasury compiles 5-year Treasury securities yields as of the close of business for each day of the previous six months and calculates the monthly average to the nearest one-hundredth of one percent. The savings bonds rate is then determined by taking 90 percent of the 6-month average and rounding the result to the nearest one-hundredth of one percent. If the regularly scheduled date for the announcement (*for example,* May 1) is a day when the Treasury is not open for business, then the announcement is made on the next business day, however, the effective date of the rate remains the first day of the month of the announcement.

(iii) *Base denomination.* All redemption value calculations are performed on a hypothetical denomination of $25 having a value at the beginning of the first semiannual rate period equal to an issue price of $12.50. Redemption values for bonds of greater denominations are in direct proportion according to the ratio of denominations.

(iv) *Issue date.* The issue date of a Series EE savings bond is the first day of the month in which payment of the issue price is received by an authorized issuing agent.

(v) *Accrual date.* Interest on a Series EE savings bond accrues on the first day of each month beginning with the fourth month from the date of issue. The redemption value of a bond does not change between these accrual dates.

(vi) *Semiannual Rate Periods.* Semiannual rate periods are the 6-month periods beginning on the date of issue and on each semiannual anniversary of the date of issue to original maturity.

(vii) *Original maturity.* Bonds reach original maturity at 17 years after date of issue.

(viii) *Final maturity.* Bonds reach final maturity at 30 years after the date of issue. Bonds cease to earn interest at final maturity.

(2) *Interest rates and monthly accruals for bonds with issue dates of May 1, 1997, or thereafter, through original maturity.* Savings bonds rates defined in paragraph (k)(1)(ii) of this section apply to earnings during the first semiannual rate period beginning on or after the effective date of the rate. Interest is credited on the first day of each month and compounded semiannually. Interest accrues beginning with the fourth month from the date of issue. *For example,* a bond issued in January has interest first credited on May 1, which represents one month of interest because of the 3-month interest penalty. The following table shows, for any given month of issue with rates announced each May and November, the months making up the semiannual rate period during which interest is earned at the announced rate (disregarding the penalty for bonds redeemed prior to 5 years after the date of issue) and the months in which the bonds increase in value. This rate is an annual rate compounded semiannually.

| If issue month is: | And rate announcement/effective date is: | Then, semiannual rate periods in which interest is earned include months of: | And bonds increase in value on 1st day of months of: |
|---|---|---|---|
| JAN or JUL | May 1 | JUL through DEC | AUG through JAN. |
| FEB or AUG | May 1 | AUG through JAN | SEP through FEB. |
| MAR or SEP | May 1 | SEP through FEB | OCT through MAR. |
| APR or OCT | May 1 | OCT through MAR | NOV through APR. |
| MAY or NOV | May 1 | MAY through OCT | JUN through NOV. |
| JUN or DEC | May 1 | JUN through NOV | JUL through DEC. |
| JAN or JUL | November 1 | JAN through JUN | FEB through JUL. |
| FEB or AUG | November 1 | FEB through JUL | MAR through AUG. |
| MAR or SEP | November 1 | MAR through AUG | APR through SEP. |
| APR or OCT | November 1 | APR through SEP | MAY through OCT. |
| MAY or NOV | November 1 | NOV through APR | DEC through MAY. |
| JUN or DEC | November 1 | DEC through MAY | JAN through JUN. |

(3) *Interest penalty for Series EE bonds with issue dates of May 1, 1997, or thereafter, redeemed less than 5 years following the issue dates.* If a Series EE savings bond with an issue date of May 1, 1997, or thereafter, is redeemed less than five years following the date of issue, the overall earning period from the date of issue will be reduced by three months. *For example,* if a bond issued January 1, 1998, is redeemed 9 months later on October 1, 1998, the redemption value will be determined by applying the redemption value calculation formula described in paragraph (k)(4) of this section and the savings bonds rate for that bond at 6 months after the date of issue on July 1, 1998. The redemption value of a bond subject to the 3-month interest penalty shall not be reduced below the issue price. This penalty does not apply to bonds redeemed 5 years or more after the date of issue.

(4) *Redemption value calculations.*

(i) Interest on a bond accrues and becomes part of the redemption value which is paid when the bond is surrendered for payment. The redemption value of a bond at original maturity shall not be less than the face amount/denomination of the bond.

(ii)(A) The redemption value of a bond for the accrual date (the first day of each month beginning with the fourth month from the date of issue) is determined in accordance with this section and the following formula:

$FV = PV \times \{[1+(i \div 2)]^{(m \div 6)}\}$ where

FV (future value) = redemption value on redemption date rounded to the nearest cent.

PV (present value) = redemption value at the beginning of the semiannual rate period as defined in paragraph (k)(l)(vi) of this section.

i = savings bonds rate as defined in paragraph (k)(1)(ii) of this section converted to decimal form by dividing by 100.

m = number of full calendar months outstanding during the semiannual rate period.

(B) The following hypothetical example illustrates how this formula is applied:

*Example,* assume a hypothetical savings bonds rate of 5.00% effective May 1, 2002, for a bond denominated at $25, with an issue date of September 1, 1997 and a redemption value of $16.00 as of September 1, 2002. The February 1, 2003, redemption value is calculated as follows: Bonds issue dated in September have semiannual rate periods beginning each March 1 and September 1. The first semiannual rate period to begin on or after the effective date of the May 1, 2002, rate would be the period beginning September 1, 2002. PV, the present value, would be the value of the bond at the beginning of the semiannual rate period, on September 1, 2002. The savings bonds rate of 5.00% converted to a decimal would be 0.05. The number of months, m, is 5 since 5 full calendar months (September through January) have lapsed since the beginning of the rate period. FV is then the result of the formula:

$FV = \$16.00 \times \{[1 + (0.05 \div 2)]^{(5 \div 6)}\} = \$16.33$ after rounding to the nearest cent.

Using the example, the FV of a savings bond with a $50 or larger denomination can be determined by applying the appropriate multiple, for example: $\$16.33 \times (\$50.00 \div \$25.00)$ for a bond with a $50.00 face amount; or $\$16.33 \times (\$100.00 \div \$25.00)$ for a bond with a $100.00 face amount.

(5) *Interest rates and redemption values for bonds during an extended maturity period.* From 17 years after date of issue to the final maturity date (the ''extended maturity period'') the

bond will be subject to the terms and conditions in effect when it is issued and will continue to earn interest as described in paragraph (k)(2) of this section, unless the terms and conditions applicable to an extended maturity period are expressly amended prior to the beginning of such period.

(6) *The Secretary's determination.* The determination by the Secretary of the Treasury, or his delegate, of market yields, savings bonds rates, rates applicable during any extended maturity period, and savings bond redemption values shall be final and conclusive.

(7) *Tables of redemption values.* Tables of redemption values are made available by the Bureau of the Public Debt, Parkersburg, West Virginia 26106–1328. Redemption values published in such tables reflect the 3-month interest penalty applied to bonds redeemed prior to 5 years from the date of issue.

4. Section 351.9 is revised as follows:

**§ 351.9 Education savings bond program.**

A bond owner or coowner may be able to exclude from income for Federal income tax purposes all or part of the interest received on the redemption of qualified U.S. Savings Bonds during the year if that owner or coowner paid qualified higher education expenses during the same year and certain other conditions are satisfied. This exclusion is known as the Education Savings Bond Program, and authoritative information about it can be found in Internal Revenue Service Publication 17, ''Your Federal Income Tax'', and Publication 550, ''Investment Income and Expenses'', available from your District Director of the Internal Revenue Service.

**Table 3 to Part 351—[Amended]**

5. The heading of Table 3 to Part 351 is amended by removing the words ''. . . beginning March 1, 1993'' and adding in its place ''. . . March 1, 1993, through April 1, 1995.''

[FR Doc. 97–11382 Filed 4–30–97; 2:30 pm]

BILLING CODE 4810–39–P

federal register

Friday
May 2, 1997

# Part VI

# Department of Transportation

## Federal Aviation Administration

## 14 CFR Part 187

## Fees for Air Traffic Services for Certain Flights Through U.S.-Controlled Airspace; Technical Amendments; Final Rule

## DEPARTMENT OF TRANSPORTATION

## Federal Aviation Administration

## 14 CFR Part 187

**[Docket No. 28860; Amendment No. 187–8]**

**RIN 2120–AG17**

## Fees for Air Traffic Services for Certain Flights Through U.S.-Controlled Airspace; Technical Amendments

**AGENCY:** Federal Aviation Administration (FAA), DOT.

**ACTION:** Interim final rule; correction and technical amendment.

**SUMMARY:** This amendment makes minor technical changes to the interim final rule published on March 20, 1997 (62 FR 13496). The interim final rule published on March 20, 1997, established fees for FAA air traffic and related services for certain aircraft that transit U.S.-controlled airspace but neither take off from, nor land in, the United States. That document allows the FAA to reasonably recover the costs it incurs in performing these services. This amendment will not impose any additional restrictions on persons affected by these regulations.

**DATES:** Effective on May 19, 1997, 0001 GMT.

**FOR FURTHER INFORMATION CONTACT:** Jeffrey Wharff; telephone (202) 267–7035.

**SUPPLEMENTARY INFORMATION:**

### Correction to the Preamble

In rule FR Doc. 97–6980 published on March 20, 1997, make the following correction. The definition of domestic airspace is to be corrected in the preamble on page 13497, under the title The Interim Final Rule, second paragraph, first sentence. The first sentence of the second paragraph is being replaced to read as follows:

For the purpose of this rulemaking the U.S.-controlled airspace includes both U.S. sovereign air space and the adjacent airspace (transition airspace) where air traffic services are provide (hereafter ''domestic airspace'') and all other airspace allocated to the United States by the International Civil Aviation Organization (hereafter ''oceanic airspace'').

In addition the time at which the rule will become effective was inadvertently omitted. Therefore, on page 34956, in the first column, the first line of the Dates heading is corrected to read as follows: **DATES:** May 19, 1997, 0001 GMT.

### Technical Amendment

The technical amendment will correct the definition of domestic airspace in the rule language.

### List of Subjects in 14 CFR Part 187

Administrative practice and procedure and Air transportation.

Accordingly, Title 14 of the Code of Federal Regulations (CFR) part 187 is amended as follows:

## PART 187—FEES

1. The authority citation for part 187 continues to read as follows:

**Authority:** 31 U.S.C. 9701; 49 U.S.C. 106(g), 40104–40105, 40109, 40113–40114, 44702, 45301–45303.

2. Appendix B is amended by revising paragraph (a) to read as follows:

### Appendix B to Part 187—Fees for Air Traffic Services for Certain Flights Through U.S.-Controlled Airspace

(a) *Applicability*. Except as provided in paragraph (b) and (c) of this appendix, this appendix applies to any person who conducts a flight through U.S.-controlled airspace that does not include a landing or takeoff in the United States. U.S.-controlled airspace includes both U.S. sovereign air space and the adjacent airspace (transition airspace) where air traffic services are provided (hereafter ''domestic airspace'') and all other airspace allocated to the United States by the International Civil Aviation Organization (hereafter ''oceanic airspace'').

* * * * *

Issued in Washington, D.C. on April 28, 1997.

**Donald P. Byrne,**

*Assistant Chief Counsel for Regulations.*

[FR Doc. 97–11412 Filed 4–30–97; 8:45 am]

BILLING CODE 4910–13–M

federal register

Friday
May 2, 1997

# Part VII

# Department of Transportation

## Federal Aviation Administration

**14 CFR Parts 11, 21, and 25**

**Type Certification Procedures for Changed Products; Proposed Rule**

**DEPARTMENT OF TRANSPORTATION**

**Federal Aviation Administration**

**14 CFR Parts 11, 21, and 25**

**[Docket No. 28903; Notice No. 97–7]**

**RIN 2120–AF68**

## Type Certification Procedures for Changed Products

**AGENCY:** Federal Aviation Administration (FAA), DOT.

**ACTION:** Notice of proposed rulemaking (NPRM).

**SUMMARY:** This document proposes to amend the procedural regulations for the certification of changes to type certificated products. The amendments are need to address the trends toward fewer products that are of completely new design and more products with repeated changes of previously approved designs. Safety would be enhanced by applying the latest airworthiness standards, to the greatest extent practicable, for the certification of design changes of aircraft engines, and propellers.

**DATES:** Comments must be received on or before September 2, 1997.

**ADDRESSES:** Comments on this proposal must be mailed in triplicate to: Federal Aviation Administration, Office of the Chief Counsel, Attention: Rules Docket (AGC–200, Docket No. 28903, 800 Independence Avenue SW, Washington, DC 20591, or delivered in person to room 915G at the same address. Comments may also be submitted electronically to the following Internet address: 9–NPRM–CMTS@faa.dot.gov. Comments submitted must be marked: Docket No. 28903. Comments may be inspected in room 915G weekdays, except Federal holidays, between 8:30 am and 5:00 pm.

**FOR FURTHER INFORMATION CONTACT:** Lyle C. Davis, Certification Procedures Branch (AIR–110), Aircraft Certification Service, Federal Aviation Administration, 800 Independence Avenue, SW, Washington, DC 20591, telephone (202) 267–9588.

**SUPPLEMENTARY INFORMATION:**

### Comments Invited

Interested persons are invited to participate in the proposed rulemaking by submitting such written data, views, or arguments as they may desire. Commenters should identify the regulatory docket or notice number and submit comments in triplicate to the Rules Docket at the address specified above. All comments will be considered by the Administrator before action on the proposed rulemaking is taken. The proposals contained in this notice may be changed in light of the comments received. All comments will be available in the Rules Docket, both before and after the closing date for comments, for examination by interested persons. A report summarizing each substantive public contact with Federal Aviation Administration (FAA) personnel concerning this rulemaking will be filed with the docket. Commenters wishing the FAA to acknowledge receipt of their comments must submit with those comments a self-addressed, stamped postcard on which the following statement is made: ''Comments to Docket No 28903.'' The postcard will be dated and time stamped and returned to the commenter.

### Availability of NPRMs

An electronic copy of this document may be downloaded using a modern and suitable communications software from the FAA regulations section of the Fedworld electronic bulletin board service (telephone: 703–321–3339), the **Federal Register's** electronic bulletin board service (telephone: 202–512–1661), or the FAA's Aviation Rulemaking Advisory Committee Bulletin Board service (telephone: 202–267–5948).

Internet users may reach the FAA's web page at http://www.faa.gov or the **Federal Register's** web page at http://www.access.gpo.gov/su__docs for access to recently published rulemaking documents.

Any person may obtain a copy of this NPRM by submitting a request to the Federal Aviation Administration, Office of Rulemaking, ARM–1, 800 Independence Avenue SW, Washington, DC 20591; or by calling (202) 267–9680. Communications must identify the notice number or docket number of this NPRM.

Persons interested in being placed on the mailing list for future NPRM's should request from the above office a copy of Advisory Circular No. 11–2A, Notice of Proposed Rulemaking Distribution System, that describes the application procedure.

### Background

*Statement of the Problem*

Under the regulations in effect prior to the early 1940's, an applicant for a change product, such as an alternate engine installation, was required to apply for a new type certificate and comply with the standards current at the time of application. This did not present an unreasonable burden on the applicant then because the airworthiness standards did not change appreciably over short periods of time. That is, the standards current at the time of an application were essentially the same as those with which the original product had to comply. Since the early 1940's, however, rapid changes in technology have resulted in significant changes in the airworthiness standards over relatively short periods of time. Therefore, an applicant for an extensive change to a type certificated product, which required a new type certificate, could be faced with complying with safety standards that varied considerably from the standards for the original product. To relieve this situation, the FAA's predecessor agency required an application for a new type certificate only if the change was quite extensive.

In recent years, a trend has developed towards fewer products that are of such significantly new design that a new type certificate is required. In many cases, over a period of time, a series of changes could permissively be made to a product by amending its original type certificate such that the resultant model is substantially different from the original model. Although each changed product in such a series of changes may differ little from its immediate predecessor, the changes could collectively result in a product with substantial differences from the original product. As a result, many newly manufactured aeronautical products are not being required to comply with the more recent airworthiness standards. The procedural regulations need to be changed to correspond with this trend toward fewer new type certificates.

*History of Type Certification*

Title 49 U.S.C. § 44701 authorizes the FAA Administrator to promote safety of flight of civil aircraft in air commerce by prescribing and revising minimum standards governing the design and construction of aircraft, aircraft engines, and propellers as may be required in the interest of safety, and such minimum standards governing appliances as may be required in the interest of safety.

Under 49 U.S.C. § 44704, the FAA may issue type certificates, including supplemental type certificates, for aircraft, aircraft engines, and propellers. The FAA may prescribe in any such certificates the duration of the certificate, and the terms, conditions, and limitations as required in the interest of safety.

The general certification procedures for products (aircraft, aircraft engines, and propellers) and parts are set forth in 14 CFR part 21 (part 21). As described

in §§ 21.13 and 21.15, any interested person may apply for a type certificate by submitting an application accompanied by the required documentation to the FAA. Sections 21.16 through 21.21, 21.101, and 21.115 specify certain regulations and designate the applicable airworthiness standards for type certification of both new and changed products.

Section 21.17 designates the applicable regulations for the issuance of type certificates. In order to be issued a type certificate, the applicant must show that the product complies with the airworthiness standards contained in one of the following 14 CFR parts, as applicable; part 23 for normal, utility, acrobatic, and commuter category airplanes; part 25 for transport category airplanes; part 27 for normal category rotorcraft; part 29 for transport category rotorcraft; part 31 for manned free balloons; part 33 for aircraft engines; part 35 for propellers; and part 21 (§ 21.17 (b) and (f)) for special classes of aircraft and primary category aircraft respectively.

The airworthiness standards in these parts of the regulations may be amended as needed to reflect continually changing technology, correct design deficiencies, and provide for safety enhancements. An applicant for a type certificate is required under current § 21.17, with certain exceptions, to show that the product meets the applicable airworthiness standards that are in effect at the date of the application. The exceptions include instances in which the Administrator specifies otherwise or in which the applicant either elects or is required under specific circumstances to comply with later effective amendments. In addition, the Administrator may prescribe special conditions.

Under § 21.16, special conditions may be prescribed if the Administrator finds that the existing airworthiness standards do not contain adequate or appropriate safety standards because of novel or unusual design features of the product to be type certificated relative to the design features considered in the applicable airworthiness standards. Also, under § 21.21(b)(1), if any applicable airworthiness standards are not complied with, an applicant may nevertheless be entitled to a type certificate if the Administrator finds that those standards not complied with are compensated for by factors that provide an equivalent level of safety. Such determinations are commonly referred to as ''equivalent safety findings'' and are made with respect to the level of safety intended by the applicable standard. In addition, under § 21.21(b)(2), an applicant may be denied a type certificate if the Administrator finds an unsafe feature or characteristic of the aircraft for the category in which type certification is requested, even though the aircraft may comply fully with the applicable airworthiness standards.

Taken together §§ 21.16, 21.17, and 21.21 designate the applicable airworthiness regulations for type certification and accommodate those circumstances when the airworthiness standards do not adequately cover the design features of a product. These sections recognize and balance the following four important considerations:

(1) The obligation of the FAA, under 49 U.S.C. § 44701, to keep the airworthiness standards required in the interest of safety, (i.e., parts 23, 25, 27, 29, 31, 33 and 35) as current as practicable;

(2) The type certificate applicant needs to know, early in a certification program, what the applicable airworthiness standards will be in order to finalize the detailed design of its product and to enable the applicant to make reasonable performance guarantees to its potential customers;

(3) In the interest of safety, rapid technological advances presently being made by the civil aircraft industry necessitate that the FAA be able to issue special conditions to address novel or unusual design features that it has, as yet, not had an opportunity to address in the airworthiness standards through the general rulemaking process, or to address novel or unusual design features that were not considered by the appropriate airworthiness standards applicable to changes to type certificates; and

(4) To allow flexibility in design. Wherever possible, the airworthiness standards of 14 CFR Chapter 1, subchapter C, are intentionally objective in nature, and the procedural regulations permit design changes over the operational life of a product.

Originally, the FAA would issue special conditions informally as an interpretation of the ''no unsafe feature or characteristic'' regulations; however, in 1967, the FAA formalized the process with the adoption of § 21.16. As provided in that section, special conditions are issued as regulations in accordance with public comment provisions of 14 CFR part 11 (part 11). The adoption of § 21.16 extended the special condition process to include aircraft engines and propellers. The provision in § 21.21(b)(2), that a type certificate would be issued for an aircraft only if no unsafe feature or characteristic existed, remained unchanged.

The phrase ''novel or unusual'' is used in describing design features for the issuance of special conditions under the provisions of § 21.16. These design features involve a state of technology not considered for the applicable airworthiness standards at the time they were written; in some areas, the state of the regulations may lag the state of the art of new designs. This disparity is due to both the rapidity in which the state of the art is advancing in civil aeronautical design and the need to develop a sufficient experience base with new technology before proceeding with general rulemaking. Therefore, there may be instances in which special conditions are required for design features considered ''state of the art'' in the aircraft industry. Conversely, many new design features that might be thought of as ''novel or unusual'' in the context of the product's original certification basis may already be covered by existing regulations, thereby obviating the need to issue special conditions. This fact is recognized in existing § 21.101(b)(1).

For example, in 1980, the holder of a small airplane type certificate who installed turboprop engines in place of reciprocating engines did so by complying with appropriate later regulations. Because appropriate regulations were available for the installation of turboprop engines, special conditions were not issued for installation of the engines. These changes were made through the FAA issuing an amendment to the type certificate originally issued in 1964. The airworthiness regulations, part 23, were changed to accommodate turboprop engines in 1969.

Special conditions are not issued for general upgrading of the applicable airworthiness standards to achieve a higher level of safety. Whenever the FAA concludes that a compelling need exists for a higher level of safety in type designs, rulemaking is proposed in accordance with the general rulemaking procedures of part 11, the Administrative Procedure Act, and Executive Order 12866. Finally, §§ 23.2, 25.2, 27.2, and 29.2 provide retroactive regulations in the airworthiness standards. A complete statement of the FAA intent with respect to the application of special conditions is found in the preamble to amendment 51 to Part 21 (45 FR 60154, September 11, 1980). That intent is in no way changed by the proposals herein.

Sometimes new airworthiness standards contain provisions that, in the interest of safety, should be applied

retroactively to existing aircraft. Typically this is accomplished by proposing changes to 14 CFR parts 121 and 135, and sometimes part 91, through rulemaking procedures.

*History of Type Certification of Changes*

Part 21 designates the applicable airworthiness standards for changed products. Section 21.19 describes the circumstances in which an applicant for type certification of a changed product must apply for a new type certificate. Prior to the early 1940's, an applicant for a changed product, such as an airplane with an alternate engine installation, was required to apply for a new type certificate. The regulations in effect prior to the early 1940's required an applicant for a changed product to apply for a new type certificate for a change such as an alternate engine installation. When a new type certificate was required, the applicant had to comply with the standards current at the time of application. This did not present an unreasonable burden on the applicant then because the airworthiness standards did not change appreciably over a period of time. The then current standards were, therefore, essentially the same as those with which the original product had to comply. Later, more rapid changes in technology resulted in significant changes in the airworthiness standards over relatively short periods of time. An applicant for a type certificate for a changed product could thus be faced with complying with airworthiness standards that varied considerably from those with which the original product complied. In some instances, the differences in standards could be so great that an applicant would be discouraged from making any changes, including changes that would, in themselves, contribute to the safety of the product. To relieve this situation, by the early 1940's, an application for a new type certificate was required only if the change was extensive.

Section 21.19(a) requires a new type certificate when a change is considered so extensive that a substantially complete investigation of compliance with the regulations is required. In addition, §§ 21.19 (b), (c), and (d) provide specific types of changes that require an application for a new type certificate because those types had already been determined to be substantial per § 21.19(a). For a normal, utility, acrobatic, commuter, or transport category aircraft, paragraph (b) requires a new aircraft type certificate if the proposed change is (1) in the number of engines or rotors, or (2) to engines or rotors using different principles of propulsion or to rotors using different principles of operation. Similarly, paragraph (c) requires a new engine type certificate if the proposed change is in the engine's principle of operation, and paragraph (d) requires a new propeller type certificate if the proposed change is in the number of blades or in the principle of pitch change operation.

The basis for § 21.19(b)(1) originated in the early 1950's following the issuance of an amended type certificate to an applicant who altered a popular single-engine, four-passenger, light airplane into a twin-engine model. Although that conversion was approved by an amendment to the original type certificate, the agency recognized that the conversion from one to two engines added considerable complexity to the airplane and greatly affected its handling characteristics. Therefore, the predecessor of § 21.19(b)(1) was adopted requiring a new type certificate for a change in the number of engines or rotors. The regulatory language was broad enough in scope to include any change in the number of engines or rotors whether such changes would simplify or add complexity to the type design.

The FAA does not require an applicant to apply for a new type certificate to add small auxiliary engines to an aircraft. In the 1960's with the development of small turbojet engines to be used as auxiliary engines, the FAA defined a jet engine that develops less than 50 percent of the static thrust developed by one of the primary propulsion engines as an auxiliary engine. The FAA considers the ''number of engines'' as used in § 21.19(b)(1) to refer to the number of primary propulsion engines and not to any auxiliary engines to be installed. The FAA has issued a large number of exemptions from the regulation concerning a change in the number of engines.

Prior to 1957, predecessors of current § 21.19(b)(2) stated that an applicant must make a new application for type certificate if the proposed change was to engines employing different principles of *operation* or *propulsion*. This meant that an applicant desiring to replace reciprocating engines with the same number of turbopropeller engines would have to apply for a new type certificate. During that period, it was recognized that considerable advances in safety, reliability, and passenger comfort could be realized by replacing reciprocating engines in certain transport category airplanes with turbopropeller engines. In order to encourage such beneficial changes, the reference to different principles of operation was deleted in 1957 for transport category airplanes. As a result, an applicant may be granted approval for a conversion of this nature without applying for a new type certificate providing the applicant complies with certain later standards applicable to turbine-powered airplanes. In the broadest sense, all powered airplanes achieve propulsion by accelerating a mass of air and/or exhaust gases. In the narrower context of § 21.19(b)(2), however, ''principles of propulsion'' means propeller-driven versus turbojet.

Section 21.19(b)(2) also states that an applicant must make a new application for a type certificate if the proposed change is to rotors employing different principles of operation or propulsion. The FAA is not aware of any instance in which this specific section was the basis for requiring an application for a new type certificate; any change of this nature, together with all related changes, would have been so extensive that a new type certificate would have been required under the provisions of § 21.19(a).

The FAA has never granted any exemptions from the regulation for a new aircraft type certificate for a change to engines or rotors using different principles of propulsion. Similarly, no exemptions have been granted from the engine or propeller type certificate regulations for changes involving the principle of engine operation, for changes in the number of propeller blades, or for changes in the principle of pitch change operation.

Under § 21.101, the original type certificate may be amended to include changes to the product when the applicant demonstrates that it complies with the same airworthiness standards as the original product plus appropriate special conditions, and the change does not warrant making a new application for a type certificate under § 21.19. Because § 21.101 (a) and (b) are incorporated by reference in § 21.115, these procedures are equally applicable to persons applying for supplemental type certificates.

Section 21.101(a) requires that an applicant for a change to a type certificate must comply with either the regulations incorporated by reference in the type certificate or the applicable regulations in effect at the date of application, plus any other amendments the Administrator finds to be directly related. The ''regulations incorporated by reference'' are the regulations that were the certification basis for the original issuance of the type certificate. They are frequently referred to as the ''original certification basis.''

If an applicant chooses to show compliance with the regulations in effect at the date of the application for the change, the applicant must also comply with any other amendments that are directly related. In some instances, a regulation may be amended to become less stringent, but a related regulation may become more stringent. In a situation of this nature, the applicant must also comply with the related compensating regulation as well. Current § 21.101(a) does not otherwise require compliance with later amendments and does not grant the Administrator the authority to require compliance with later regulations as a method to increase the level of safety of a product.

An applicant for a change to a type certificated product is responsible for showing that the entire product, as altered, not just that the change itself, complies with the certification basis, because areas that have not been changed may be affected by the change. However, the applicant need not resubstantiate those areas of the product where the original substantiation has not been invalidated by the change.

Section 21.101(b) pertains to changes for which the regulations incorporated by reference do not provide adequate standards. Such changes generally involve features that were not envisaged at the time the regulations incorporated by reference were adopted and are, therefore, novel or unusual with respect to those regulations. For these changes, the applicant must comply with regulations in effect at the date of application for the change as found necessary to provide a level of safety equal to that established by the regulations incorporated by reference. In this case, the applicant is not able to select any amendment of the regulation it chooses between those incorporated by reference and those in existence at the date of the application. When regulations in effect at the date of application for the change fail to provide adequate standards, the applicant must comply with special conditions to provide a level of safety equal to that established by the regulations incorporated by reference.

*Trends in Type Certification of Changes*

In recent years, a trend has developed toward fewer products that are of completely new designs, which would require new type certificates. Over a period of time, a series of changes to an original product may have been made so that the current model is substantially different from the original model. Although each changed product in such a series of changes may differ little from its immediate predecessor, the changes could result collectively in a product with substantial differences from the original product.

For example, one model originally manufactured as a normal category airplane with two reciprocating engines has been changed through a series of alterations to incorporate turbopropeller engines, a stretched and heightened fuselage, a tricycle landing gear, a modified wing planform and a 42 percent increase in maximum takeoff weight. In this particular case, the majority of changes were made through the FAA's issuing supplemental type certificates to modifiers other than type certificate holder. However, the type certificate holder could have made the same incremental changes without applying for a new type certificate each time.

In another instance, a type certificate holder effected significant changes in the design of a turbojet transport category airplane without obtaining a new type certificate by making a series of changes to its existing type certificate. Each incremental change, by itself, was determined not to be so extensive as to require a new type certificate under § 21.19(a). This airplane evolved into a configuration approximately 40 percent greater in fuselage length and with a 92 percent greater maximum takeoff weight than the original model. These changes, which have been incorporated into newly manufactured airplanes, are possible because the FAA issued amendments to the type certificate.

Another trend in manufacturing is to keep products in production over several decades. Some currently manufactured transport category airplanes have, for example, evolved from airplane models originally type-certificated 25 years ago. This does not imply that those airplanes are ''unsafe,'' because they do, in practice, have features that address the intent of most of the current airworthiness standards. However, current procedural regulations (part 21) do not require that changed products comply with the current airworthiness standards.

The basic premise behind the FAA's current policies for the procedures and airworthiness standards for type certification is that the highest possible degree of safety in the public interest, should be achieved by products being certificated at any given time. In dealing with this premise, the FAA has had to continually weigh the desire for the highest level of safety with the cost to the manufacturers, operators, and traveling public for achieving that highest possible degree of safety in the public interest. This balance between safety and cost has been exacerbated by the introduction of highly sophisticated products whose development and manufacture have become enormously expensive. This is one reason why, as stated before, manufacturers choose to produce more and more changed products that, by the FAA regulations, are not required to have new type certificates.

The FAA maintains that the issue should not be whether a product is produced under a new type certificate or an amended one. The issue is whether or not the level of safety of the product, embodied in the airworthiness standards it complies with, is as high as practicable. In addition, to require areas unaffected by the change to comply with the later standards is not only unreasonably costly but may reduce the level of safety of the product due to unforeseen developmental problems. The manufacturers are constantly issuing service information that describes approved alterations that users may make to improve the level of safety of the product. Thus, it is common place that products in service today possess a level of safety significantly greater than that embodied in their certification basis.

When establishing the highest practicable level of safety for a changed product, the FAA has determined that it is appropriate to assess the service history of a product as well as the later airworthiness standards. It makes little sense to mandate changes to well understood designs, whose service experience has been acceptable, merely to comply with new standards. The clear exception to this premise is where the new standards were issued to address a deficiency in the design in question or where the service experience is not applicable to the new standards. This consideration of airworthiness standards and service experience should form the basis for developing the ceritifcaiton basis for a change in a product.

It can be argued, for consistency, that new airworthiness standards should apply across the board to the entire aircraft fleet; however, application of new standards would not be practicable in every case. Although newly designed aircraft are required to meet all applicable current airworthiness standards, in many cases a product being changed, for which only an amended type certificate is needed, is required to meet only the standards referenced in the original type certificate. Thus, there may be a considerable difference between the standards required for a new product and for a product undergoing change. A

product undergoing change that met the applicable standards at the time of original type certification is not currently required to meet more current airworthiness standards except in those instances where retroactive regulations have been issued or the applicant elects to comply with later amendments.

In recent rulemakings, the FAA has carefully considered whether corresponding retroactive action is warranted whenever a change to the airworthiness standards for type certification was proposed. In those cases where it has been deemed that a safety benefit commensurate with the cost could be achieved, the rulemaking has also included a proposal to change the relevant operating regulations to require newly manufactured airplanes and/or airplanes in service to comply retroactively with the new standards, regardless of whether such compliance would be required as a condition of type certification. For instance, some of the regulations implemented in recent revisions to part 25 for newly manufactured airplanes were required for the existing fleet and were implemented in the operating regulations, such as part 121.

In 1965, the FAA granted an exemption from the provisions of § 21.19(b)(1) to permit conversion of a four-engine amphibian to a twin-engine configuration without the applicant applying for a new type certificate. During the 1980's three applicants petitioned for exemptions from the above regulations so they could convert Boeing 727 airplanes from the original three-engine configuration to ones with two engines without having to apply for new type certificates. Another applicant petitioned for a similar exemption to replace the four engines of a Lockheed 1329 Jetstar aircraft with two engines of more recent vintage. The FAA granted each exemption with the condition that the petitioner comply with the provisions of then current part 25 in all areas, systems, components, equipment, or appliances affected by the conversion.

The FAA also granted a number of exemptions that permitted increasing the number of engines without the need for the applicants to obtain new type certificates. In 1985, an applicant received an exemption to replace two reciprocating engines in Grumman Albatross amphibians with four turbo propeller engines without having to obtain a new type certificate. In granting the exemption, the FAA concurred that the alteration should improve the Albatross by increasing safety, increasing power plant reliability, and improving overall aircraft efficiency. The exemption noted that compliance with § 21.19(b)(1) would have required changes to some basic systems that had provided satisfactory performance for many years and had contributed to the safety record of those airplanes. Applying then-current regulations to components and systems not affected by the installation of the four engines would have been time consuming and costly, and would not necessarily have contributed any safety benefits. As with the exemptions to reduce the number of engines, this exemption was granted with the condition that the petitioner comply with the provisions of then current part 25 in all areas, systems, components, equipment, or appliances affected by the conversion.

A similar exemptions also granted in 1989 to enable an applicant to increase the number of engines from one to two in certain Bel 206 series rotorcraft. The petitioner cited the increased safety afforded by a twin-engine configuration in the event a failure occurred during hover, and also the enhanced altitude performance. As a condition of the grant of exemption, the applicant was required to show that the altered rotorcraft complied with the standards of part 27 in effect at the date of application for the change for all areas, systems, equipment, or appliances that were changed or significantly affected by the change.

These exemptions point out an important feature that has been included in this proposed rulemaking. The number of engines is not, in itself, an appropriate criterion for requiring an application for a new type certificate as long as the type design complies with the regulations effective at the date of the application for the change in those areas changed or affected by the change.

*Recent FAA Actions*

Apart from safety considerations, there has also been a growing international concern that some changed products are given an unfair competitive advantage over those that are of new design and must comply with later standards.

Because of these concerns, the FAA participated in the activities of an ad hoc committee sponsored by the Aerospace Industries Association of America, known as the International Certification Procedures Task Force (ICPTF). In addition to the FAA, this task force included representatives of the European Joint Aviation Authorities, Transport Canada, Aerospace Industries Association of America, Air Transport Association of America, General Aviation Manufacturers Association, International Air Transport Association, Association Europeenne des Constructeurs de Materiel Aerospatial, Aerospace Industries Association of Canada, Air Line Pilots Association, and Association of European Airlines.

The ICPTF was organized to develop the philosophy and the necessary regulatory text and advisory material that would provide for the implementation of later regulatory amendments applicable to aeronautical products undergoing change, products in production, and products in service. The specific tasks of the ICPTF were: (1) Develop the type certification philosophy for changes to aeronautical products, including revisions to the regulations and associated advisory material; (2) Develop the necessary guidance information on the use of ''service experience'' in the type certification process; and (3) Develop a method to evaluate the safety impact and cost effectiveness of revisions to the airworthiness standards.

In order to develop future proposed safety standards by using a system-type analysis, the FAA chartered a committee of safety experts, known as the Aviation Rulemaking Advisory Committee (ARAC), on February 5, 1991. This committee established the International Certification Procedures Working Group, which consists of the original ad hoc committee formerly known as the ICPTF. The task assigned to this working group was to present to ARAC various proposals pursuant to its area of expertise. ARAC then had the option to submit these recommendations to the FAA, and the FAA would decide whether or not to issue a proposal based on the ARAC recommendations.

The Working Group presented to ARAC an NPRM and associated advisory material concerning the type certification procedures for changes to aeronautical products, newly manufactured products, and products already in service. ARAC, in turn, submitted these documents as recommendations to the FAA. The FAA recognizes the difficult task the working group undertook in the effort to address the issues in this proposed rule and in the advisory material. Much of the work done within the working group could not have been accomplished without the assistance of working group members representing the aviation community. The rulemaking proposed by the FAA in this notice reflects the ARAC recommendations in the type certification procedures for changed products with only minor changes. Similar proposed changes have been published by the Joint Aviation Authorities.

*FAA's Proposed Policy on Changed Products*

The FAA intends to require that applicants for changes to type certificated products show compliance with the latest amendments to the airworthiness standards that are applicable to the product being changed. Exceptions to requiring a showing of compliance with the later amendments would be provided to accommodate variations in the kinds of type certificated products, of changes to these type certificated products, and revisions of the airworthiness standards. These exceptions would permit compliance with regulations issued prior to the regulations in effect at the date of the application for the change.

This proposed rulemaking would amend the type certification procedures for changes to type certificated products to bring the certification basis for changed products and for newly type certificated products closer together. The intent is to ensure that when an essentially new product is developed through a series of changes, regardless of the extent of each change, the final product achieves a level of safety similar to that of a comparable new product. This concept will be tempered with the knowledge that a good design does not become unsafe as soon as a new regulation has been published.

Some differences may be acceptable between the certification basis for a product undergoing a change and the current regulations that would be applicable if a new product was being type certificated. This acceptance would be based on whether there is a defined safety issue involved in the specific product.

The FAA is already encouraging applicants of certain type certificated products undergoing alterations to comply with later amendments of the airworthiness standards. By this rulemaking, the FAA proposes to require all proposed changes for all type certificated products to comply with later amendments of the airworthiness standards. The long term result of this approach will be that an amended type certificate will have a certification basis that provides a similar level of safety to that provided by the certification basis of a new type certificate for the same product.

The FAA will issue an advisory circular based on this rulemaking. This advisory circular will provide guidance on determining the certification basis for changed aeronautical products, including identifying the conditions under which it will be necessary to apply for a new type certificate. By separate notice, in this issue of the **Federal Register**, the FAA is also inviting interested persons to comment on the proposed advisory circular. The FAA will consider comments from this notice and comments received on the advisory circular before taking any final action on either.

**Discussion of the Proposed Rulemaking**

Sections 11.11, 21.19, 21.101, 21.115, and 25.2 would be amended as follows to implement the policy discussed above in relation to changes to products:

*Section 11.11*

Current § 11.11 lists special conditions required as prescribed under § 21.101(b)(2) as an FAA record that is maintained in current docket form in the Office of the Chief Counsel. To remain consistent with the proposed changes to § 21.101, described later, it is necessary to amend § 11.11 to refer to § 21.101(c) instead of § 21.101(b)(2). This would not be a substantive change.

*Section 21.19*

Current § 21.19(a) states that any person who proposes to change a product must make a new application for a type certificate if the Administrator finds that the proposed change in design, configuration, power, power limitation (engines), speed limitations (engines), or weight is so extensive that a substantially complete investigation of compliance with the applicable regulations is required. This sentence has caused confusion because it covers several types of changes for all products—airplanes, rotorcraft, aircraft engines, and propellers. In addition, current paragraph (b), (c), and (d) list other specific types of changes that mandate a new application for a type certificate. Only the general language of current paragraph (a) would be incorporated into the new § 21.19, while the previously listed specific changes would be subject to case-specific evaluations to determine whether they are substantial. Application of § 21.19 would depend upon an evaluation of whether the proposed change in ''design, power, thrust, or weight'' would necessitate a substantially complete investigation of the compliance of the changed product. Each of the following airplane design changes, considered alone, could typically be regarded as substantial design change:

(1) Change from a high wing to a low wing airplane, or vice versa;

(2) Change of empennage configuration for larger airplanes (cruciform vs 'T' or 'V' tail);

(3) Complete repositioning of engines (tail to wing, etc.); and

(4) An increase in airplane design complexity resulting from an increase in the number of engines.

Currently § 21.19(b) describes specific changes for which the applicant must apply for a new aircraft type certificate. These include (1) changes in the number of engines or rotors; and (2) changes to engines or rotors using different principles of propulsion or to rotors using different principles of operation. Historically, these types of changes have fallen into one of two categories—those that were not extensive enough to require a new application for a type certificate, as evidenced by the large number of exemptions that have been granted over the past quarter century, or those that were so extensive that a new application was required because a complete investigation of compliance is required. Accordingly, the provisions of current § 21.19(b) are not needed and are not included in this proposal. The exemptions that have been granted from current § 21.19(b) have typically required that those areas, systems, components, equipment, and appliances that are changed or significantly affected by the change must comply with the applicable regulations in effect at the date of the application for that change. This requirement would be embodied in proposed § 21.101, which would generally require that an applicant for a change to a type certificate must comply with the regulations in effect at the date of the application for that change, with an exception, however, that those areas, systems, components, equipment, and appliances not affected by the change could continue to comply with the regulations incorporated in the reference type certification basis. Accordingly, this proposed amendment would be consistent with the exemptions that have been granted on changes in the number of engines. The need for requiring a new application for a type certificate would be alleviated in many instances by the proposed changes to § 21.101.

Current § 21.19(c) describes another specific change in which the applicant must apply for a new aircraft engine type certificate. This change is in the principle of operation. Also, current § 21.19(d) describes specific changes in which the applicant must apply for a new propeller type certificate. These changes are in the number of blades or principle of pitch change operation. Invariably, the type of changes set forth in both of these sections are so extensive that a new application would be required in any event because a

complete investigation of compliance is required. Accordingly, this proposal would delete these types of changes from § 21.19. Under proposed § 21.101, with certain exceptions, these types of changes and all areas, systems, components, equipment, and appliances affected by the changes would have to comply with the regulations in effect at the date of application for the change to the type certificate.

*Section 21.101*

Current § 21.101(a) states that if a person applies for a change in a type certificate, the product must comply with either the regulations referenced in the type certificate or the applicable regulations in effect at the date of the application for the change, if elected by the applicant, plus any other amendments the Administrator finds to be directly related.

Current paragraph (b) addresses novel or unusual design features where the Administrator finds that the regulations incorporated by reference in the type certificate do not provide adequate standards. In this case the applicant must comply with the regulations in effect at the date of the application for the change and any necessary special conditions ''to provide a level of safety equal to that established by the regulations incorporated by reference in the type certificate for the product.'' This means that the level of safety must be at least equal to the level of safety that was required by the regulations referenced in the type certificate.

To ensure that the products meet the latest airworthiness standards wherever practicable, proposed § 21.101 would specify that, with certain exceptions, the applicant for a change must comply with the applicable regulations in effect at the date of the application for the change. The intent of this proposal is to apply the applicable regulations in effect at the date of the application to those areas, systems, components, equipment, and appliances affected by the change. For those areas, systems, components, equipment, and appliances not affected by the change, continued compliance with the regulations incorporated by reference in the type certificate is considered acceptable.

Section 21.101(a)

This proposed paragraph would require an applicant for a change to a type certificate to comply with the applicable regulations in effect at the date of the application for the change, also referred to as the later regulations, and with parts 34 and 36.

Section 21.101(b)

This proposed paragraph would provide exceptions to the regulation in proposed paragraph (a), permitting the applicant to comply with earlier amendments to the regulations. A ''regulation'' as used herein means individual paragraphs of the Federal Aviation Regulations or predecessor regulations. When choosing the amendment level of a regulation, all related regulations associated with that amendment level would have to be included. The amendment level chosen would not be allowed to predate either the existing basis or anything required by the retroactive sections, §§ 23.2, 25.2, 27.2, or 29.2. Design changes vary in both complexity and magnitude so it is necessary for each proposed change to be evaluated on a case by case basis, taking into account previous changes and their certification basis. Individual incremental changes may be modest; however, the cumulative effect can result in a significant overall change. In this context, the following factors should be considered: (1) the extent of the previous changes and the extent to which later amendments have been addressed for these individual changes; and (2) the extent of revisions to the airworthiness standards from those of the original certification basis of the model being changed. When an essentially new product is developed, step by step, through a series of non-substantial design changes, it should achieve a level of safety similar to that of a comparable new product.

Substantial changes are addressed in § 21.19. Those that are not substantial will be either nonsignificant or significant. A small weight increase or the installation of a flight management system is an example of a non-significant change. The installation of a cargo door is an example of a significant change. A change from a low wing to a high wing is an example of a substantial change.

In evaluating a design and making the final determination of nonsignificant or significant, under the exceptions provided for in § 21.101(b), the FAA would rely on documented engineering, safety, and economic data. Any data submitted by the applicant should have the same degree of thoroughness and engineering quality expected for initial compliance with airworthiness standards.

Section 21.101(b)(1)

This proposed paragraph would provide the first exception to the regulation in proposed paragraph (a), to show compliance with the later applicable regulations. The proposed paragraph would state that the applicant would be allowed to demonstrate compliance with earlier regulations, but not earlier than the regulations incorporated in the existing certification basis, if the effect of the proposed change is not significant, taking into account earlier design changes and previous updating of the type certification basis.

There may be concurrent significant and non-significant changes made to a product. For example, there may be a small change in the model of engines used at the same time large changes are made to the airframe. Each part of the total change would be evaluated to determine its significance on its own merit. It must be recognized, however, that a number of related non-significant changes may collectively represent a significant change to the product.

Section 21.101(b)(2)

This proposed paragraph would provide the second exception to the regulation in proposed paragraph (a), to show compliance with the later applicable regulations. The proposed paragraph would state that the applicant may show compliance with earlier regulations for those areas, systems, components, equipment, and appliances that are not affected by the change.

The FAA recognizes that arbitrarily requiring compliance with later regulations in areas, systems, components, equipment, and appliances not affected by the change may cause redesign of components that have an acceptable service record without an attendant improvement in safety, or may have the counterproductive effect of discouraging any changes at all, including those that would provide a notable improvement in safety.

Section 21.101(b)(3)

This proposed paragraph would provide the third exception to the regulation in proposed paragraph (a) to show compliance with the later applicable regulations. If compliance with a regulation in effect at the date of the application for the change would not contribute materially to the level of safety of the product to be changed, or would be impractical, the applicant may demonstrate compliance with an earlier amendment of a regulation provided that the amended regulation does not precede either the corresponding regulation in §§ 23.2, 25.2, 27.2, or 29.2 of this chapter, or the corresponding regulation incorporated by reference in the type certificate.

Compliance with the later amendment would be considered to ''not materially

contribute to the level of safety'' if the level of safety achieved by the existing design with the proposed design change would not be enhanced by compliance with that later amendment. In demonstrating this, the applicant would show that the level of safety achieved by the existing design incorporating the proposed design change would achieve a safety level similar to that reflected in the later amendment.

The factors that would be considered in comparing the level of safety achieved by the existing design incorporating the proposed design change with the level of safety achieved by compliance with the later amendment would include: whether the product has compensating design features; the extent that the service experience of the product shows that the operational performance and reliability of the product provides a level of safety similar to that of later amendments; and whether compliance with a later amendment, notably when it necessitates a redesign, would have an adverse effect on safety in terms of operational performance and reliability.

Nothing would limit the future operation or transfer of a product after a design change is approved with an older certification basis; furthermore, the intent of this proposal is to establish certification bases appropriate to the designs of the products and the designs of the changes. Therefore, if an applicant for a design change is changing one or two items of a product, and another applicant is making the same change to 100 items of the same product, the applicant's design changes should be certificated to the same basis.

Demonstrating that compliance with later regulations would not materially contribute to the level of safety could necessitate analyses of the safety features of the existing design and the proposed change, and an analysis of the safety concerns addressed by the relevant amendment. The evaluation may be accomplished using a numerical-statistical approach, subject to the availability and relevance of applicable data. In practice, engineering judgment, based on scientific, rational, and reasoned analysis of the relevant data, would be used in the development of this evaluation. The essentials of the evaluation would involve:

a. A clear understanding of the regulatory change and what prompted the change;

b. A detailed knowledge of the proposed design feature; and

c. A comprehensive review of the applicable service experience.

An applicant may be unable to show that compliance with the original certification basis, together with the level of safety demonstrated by the applicable service experience, provides a level of safety similar to that of the later airworthiness regulations. If compliance with the later airworthiness regulations would then involve a design change, the benefits of such a redesign would be considered in the light of any possible adverse effects of the redesign on safety.

An applicant for a change to a type certificate would not be required to demonstrate that the changed product complies with a later amendment to an airworthiness standard if the applicant shows that such compliance would be ''impractical.'' Compliance with a later amendment would be considered ''impractical'' when the applicant can establish that the cost of the design change and related changes necessary to demonstrate compliance with the amendment would not be commensurate with the resultant safety benefit. Where compliance with the later amendment would prompt a redesign, the cost of redesigning other parts of the product to accommodate this redesign also would be considered.

The FAA continually weighs the desire for the maximum level of safety with the cost to the manufacturers, operators, and traveling public for achieving that level of safety. If the designer of an aircraft in development is tasked with incorporating a ''change'' to a system in that new design, the designer usually has many more options in making ''changes'' to related systems to accommodate the ''change.'' Conversely, the systems related to a system to be changed in a certificated design have been established, and there may be few such options, if any. These restraints are exacerbated by a change in the certification basis, and the consideration of the service experience of the product. Under these conditions, it may become unreasonably costly for the change to comply with the latest standards.

A safety benefit-resource evaluation could be used to assist in determining impracticality, and would be discussed between the applicant and the Administrator while establishing the certification basis. The economic issues associated with compliance with the later amended airworthiness standards would be a major portion of this evaluation.

Any safety benefit-resource evaluation used to determine ''impractical'' should evaluate the enhancement of the safety involved with complying with the airworthiness regulation under consideration along with the cost associated with this compliance. This evaluation would weigh the factors associated with the safety benefit and the factors associated with the cost of compliance.

The factors involved with the safety issue could include seriousness of the consequences of the hazard that the regulatory change addresses, frequency, of those consequences, and the effectiveness of applying the regulatory change to the changed product. The factors involved with the cost of compliance could include labor, new capital equipment needed, materials, operating cost increase, and revenue loss. The agency is seeking comments on this concept of using ''Impractical'' as defined herein.

Associated Advisory Circular

The proposed associated advisory circular includes guidance for purposes of complying with the requirements of this proposed rule. This advisory circular also contains a safety benefit-resources evaluation guide, which was recommended by the ARAC to be an acceptable means of compliance with the exceptions of proposed § 21.101(b). As elsewhere in this edition of the **Federal Register**, the safety benefit-resource evaluation guide has been included in the draft advisory circular for purposes of information only. The safety benefit-resource guide does describe some of the kinds of issues that the applicant would address, and the FAA would consider, in determining the certification basis in accordance with this proposed rule.

Section 21.101(c)

This proposed paragraph would contain the provisions of current § 21.101(b)(2) concerning special conditions. For consistency with the other proposed changes to § 21.101, this paragraph would state that an applicant for a change must comply with any special conditions, and amendments to those special conditions, if needed, that would provide a level of safety equal to that established by the regulations in effect at the date of the application for the change. The interpretation of ''novel or unusual design features'' shall be the same as present practice under current § 21.101(b)(2). The provisions of current § 21.101(b)(1), concerning the use of later regulations when the regulations incorporated by reference do not provide adequate standards with respect to the proposed change, would no longer be needed and would not be incorporated into the proposed regulation. This is because proposed § 21.101(a) would require the use of later regulations.

The provisions of current § 21.101(c), concerning the replacement of reciprocating engines with turbopropeller engines, are not incorporated into the proposed regulation. A change of this nature would be considered a significant change, and compliance with the regulations in effect at the date of application for the change, therefore, would be required.

Section 21.101(d)

This proposed paragraph would state that an application for a change to a type certificate for a transport category aircraft would be effective for 5 years, and an application for a change to a type certificate for all other products would be effective for 3 years. These proposed effectivity periods for an application are the same as those in current § 21.17 (c) and (d) for an application for a type certificate. Because current § 21.101 requires compliance with the regulations incorporated by reference in the type certificate and because the certification basis of the original product doesn't change, having an effectivity period for an application for a design change has not been necessary. Under the proposed § 21.101, which would require meeting the airworthiness standards in effect at the date of the application for the change, it is necessary to limit the effectivity of the application for a change, to support the intent of the proposed regulation. This proposed section would state that if an application for a design change expires, an applicant may file a new application or apply for an extension of the original application as in present § 21.17 (c) and (d).

Section 21.101(e)

This proposed paragraph would contain procedures that would be applicable for changes of aircraft, aircraft engines, and propellers that have been type certificated using the airworthiness standards listed in Chapter 1. Proposed paragraph (e)(1) of § 21.101 would mandate that the certification basis for a change to a product certificated under the applicable regulations that preceded parts 23, 25, 27, 29, 31, 33, or 35 would be established in the same manner as a change to a product certificated under one of these parts. For example, an applicant would be required to show compliance with the latest amendment(s) under part 23 that would apply to a change to a small airplane originally certificated under Part 3 of the Civil Air Regulations (CAR 3). A change to an airplane type certificated under Special Federal Aviation Regulation No. 41 (SFAR 41), would be handled somewhat differently. The SFAR 41 requirements incorporated by reference in the type certificate of such an airplane have expired, and may no longer be used for purposes of issuing certificates; accordingly, under proposed § 21.101, only the latest amendments of the part 23 requirements of the SFAR 41 certification basis would be applicable for a change to an SFAR 41 airplane design.

Applicability of this proposed regulation would include changes to products type certificated under §§ 21.21 and 21.29. In addition, these proposed procedures would be applicable for changes of aircraft that have been type certificated under §§ 21.24, 21.25, 21.27, and special classes of aircraft, where a part of the certification basis contains regulations from the airworthiness standards listed in Chapter 1.

At first glance, because some of the certification basis of aircraft type certificated under §§ 21.24, 21.25, 21.27, and special classes of aircraft do not completely consist of airworthiness standards of the Federal Aviation Regulations, aircraft type certificated under these regulations may not appear to completely benefit from the procedures of this proposed rulemaking. However, after careful consideration, the FAA has determined that the level of safety of changes to an aircraft that has been type certificated under any of these regulations, would benefit from the enhanced safety associated with the appropriate later amendments of those portions of the airworthiness standards that are a part of the certification basis. This takes into consideration that the certification basis, in some cases, may consist of airworthiness standards as well as other requirements found by the Administrator to be necessary to provide an equivalent level of safety.

For example, the certification basis for a special class aircraft or primary category aircraft may be based, in part, on portions of those airworthiness standards contained in Chapter 1 that were found by the Administrator to be appropriate for the specific type design. Since revisions are frequently made to the airworthiness standards to upgrade the minimum level of safety required for civilian aircraft and to incorporate certification standards for modern-state-of-the-art technology, it seems logical that the level of safety of changes to special class aircraft would benefit from compliance with the later airworthiness standards. These proposed procedures would apply only to those parts of the certification basis that were obtained from the airworthiness standards listed in Chapter 1.

Joint Aviation Requirements, JAR 22, is a published regulation being used as a means of compliance by the FAA for gliders, as a special class of aircraft, but this regulation is not listed in Chapter 1; therefore, the proposed procedures would not be applicable in this case. Although these procedures are not intended to be applicable to the Joint Aviation Requirements, an applicant may comply with thee procedures when the Administrator finds them acceptable for a specific application.

Surplus military aircraft, type certificated in the restricted category under § 21.25(a)(2), normally are accepted on the basis of the previous military qualifications acceptance and service record in lieu of showing compliance with airworthiness standards in Chapter 1. However, a change to these aircraft for a special purpose operation usually is not supported by the military service history and needs to comply with an airworthiness standard. Compliance with the later amended airworthiness standard for the change would not be appropriate as the aircraft did not meet an airworthiness standard initially.

Limited category aircraft are surplus military aircraft, mostly from World War II, that were type certificated under Part 9 of the Civil Air Regulations for use other than air transport. These aircraft were not intended to carry persons or property for compensation or hire, and normally were accepted on the basis of their previous military qualifications acceptance and service record. However, a change to these aircraft usually is not supported by the military service history, therefore, the change must comply with appropriate airworthiness standards. It seems logical that the level of safety of changes to aircraft that have not been type certificated to an airworthiness standard would not benefit from compliance with the later airworthiness standards.

*Section 21.115*

The type certificate holder may obtain approval for a change either by amending the type certificate under § 21.101 or by obtaining a supplemental type certificate under § 21.115. Any other modifier would have to obtain a supplemental type certificate under § 21.115. There should not be a difference in the certification basis for a change to a type certificated product between these two methods of approval, amended type certificate or supplemental type certificate.

Current § 21.115 incorporates the provisions of current § 21.101(a) and (b)

by reference, making the provisions of the latter section equally applicable to applicants for supplemental type certificates. In view of the proposed changes to § 21.101, it is necessary to amend § 21.115 to refer simply to § 21.101 rather than specifically to § 21.101(a) and (b). This would not be a substantive change.

*Section 25.2*

Current § 25.2(c) incorporates the provisions of current §§ 21.101(a)(2) and (b) by reference, addressing the subsequent revisions to the special retroactive regulations. To remain consistent with the proposed changes to § 21.101, it is necessary to amend § 25.2(c) to refer to § 21.101(a). This would not be a substantive change.

**Paperwork Reduction Act**

In accordance with the Paperwork Reduction Act of 1980 (Pub. L. 96–511), there are no requirements for information collection associated with this proposed rule.

**International Compatibility**

The proposal results, primarily, from a recommendation harmonized with the aviation authorities of Canada and Europe. Similar corresponding changes to regulations governing type certification procedures for changed products are being proposed by Transport Canada and the Joint Aviation Authorities.

**Regulatory Evaluation, Regulatory Flexibility Determination, and Trade Impact Assessment**

Changes to federal regulations must undergo several economic analyses. First, Executive Order 12866 directs Federal agencies to promulgate new regulations or modify existing regulations only if the potential benefits to society outweigh the potential costs. Second, the Regulatory Flexibility Act of 1980 requires agencies to analyze the economic impact of regulatory changes on small entities. Finally, the Office of Management and Budget directs agencies to assess the effects of regulatory changes on international trade. In conducting these assessments, the FAA has determined that this proposed rule: (1) would generate benefits exceeding its costs and is not ''significant'' as defined in Executive Order 12866; (2) would not be ''significant'' as defined in DOT's Policies and Procedures; (3) would not have a significant impact on a substantial number of small entities; and (4) would not restrain international trade. These analyses, available in the docket, are summarized below.

*Regulatory Evaluation Summary*

The following discussion of costs and benefits is provided because the proposed procedures would be explicitly incorporated into formal regulations. By administrative policy, the FAA is already urging designers to show that certain changed products comply with selected amendments that were adopted after the initial application for type certification of the base product. It is likely that such administrative decisions would continue, to some unknown degree for an unknown proportion of type certificated products, in the absence of the proposed rule.

The proposed rule would not initiate a specific certification standard or requirement per se, but instead, would formally alter the manner in which existing and future standards would be determined to be applicable. As a result, the FAA can describe, but is not able to quantify, the costs and benefits of the proposal. A quantification of the impacts would require a forecast of potential future changes to all commuter and transport category airplane models; all rotorcraft; and all other categories of regulated aircraft, aircraft engines, and propellers. In addition, a quantified evaluation would require a review of all applicable regulations that have been adopted during the intervening period after the type certification of the product, plus engineering appraisals of the intended changes for each product, the effects of those changes on other systems and components, and the economics associated with bringing each affected system and component up to the standards of the intervening regulations. No reasonably accurate estimate of these factors can be made.

In addition to the absence of a comprehensive estimate, no examples of such cost estimates are available for this evaluation. In some instances, the FAA has urged manufacturers of changed products to comply with later regulations. In association with these actions, individual manufacturers of proposed changed products have evaluated the costs and benefits that would be incurred to meet the pertinent standards. Due to competitive economic considerations, however, such information is considered proprietary and is not available.

The attributable costs of this proposal are the incremental costs that would be incurred to meet any additional or more stringent standards, adopted after the application for type certification of the initial product, that would not be required in the absence of this proposal. Similarly, the direct benefit of the proposal is the augmented safety that would result from meeting such standards. Although the attributable costs and benefits cannot actually be quantified, the proposed rule is premised on an analysis to verify that any actions taken pursuant to it would be cost beneficial.

As noted in the description of the proposal, compliance with later regulations would not be required for a change that is not classified as being significant, for those areas or components not affected by the change, or where compliance with later regulations would not contribute materially to the level of safety or would be ''impractical.'' Compliance with later amendments would be considered impractical if the applicant can show that such compliance would result in costs that are not consistent with the possible safety benefits. Further guidance on the definition of what constitutes a significant change would be provided in an advisory circular.

In addition to the benefits of any individual action taken pursuant to the proposed rule, the proposal would also generate procedural benefits. The formalization of this policy by regulation would expedite decisions about the certification basis of proposed changed products and, therefore, would provide manufacturers and modifiers with earlier and more dependable information on which to base their product development decisions. In addition, the proposed procedures have been harmonized with the foreign aviation authorities of Canada and Europe and the resulting common standards would reduce the costs and delays necessary to formally determine and fulfill dissimilar international requirements.

Although the attributable costs and benefits of the proposed rule cannot be quantified, the FAA holds that it would be cost beneficial.

*Regulatory Flexibility Determination*

The Regulatory Flexibility Act of 1980 (RFA) was enacted by Congress to ensure that small entities are not unnecessarily or disproportionately burdened by Government regulations. The RFA requires a Regulatory Flexibility Analysis if a proposed rule would have a significant economic impact, either detrimental or beneficial, on a substantial number of small entities. FAA Order 2100.14A, Regulatory Flexibility Criteria and Guidance, establishes threshold cost values and small entity size standards for complying with RFA review requirements in FAA rulemaking actions. The proposed amendments

would not have a significant economic impact on a substantial number of small entities.

*Trade Impact Assessment*

The proposed rule would not constitute a barrier to international trade, including the export of American goods and services to foreign countries and the import of foreign goods and services into the United States. Instead, the proposed type certification procedures for changed products have been harmonized with those of foreign aviation authorities and would lessen the restraints on trade.

## Federalism Implications

The regulations proposed herein will not have substantial direct effects on the states, on the relationship between the national government and the states, or on the distribution of power and responsibilities among the various levels of government. Therefore, in accordance with Executive Order 12612, it is determined that this proposed would not have sufficient federalism implications to warrant the preparation of a Federalism Assessment.

## Conclusion

For the reasons discussed in the preamble, and based on the findings in the Regulatory Flexibility Determination and the International Trade Impact Analysis, the FAA has determined that this proposed regulation is not a significant regulatory action under Executive Order 12866. In addition, the FAA certifies that this proposal, if adopted, will not have a significant economic impact, positive or negative, on a substantial number of small entities under the criteria of the Regulatory Flexibility Act. This proposal is considered nonsignificant under DOT Regulatory Policies and Procedures (44 FR 11034; February 26, 1979). An initial regulatory evaluation of the proposal, including a Regulatory Flexibility Determination and International Trade Impact Analysis, has been placed in the docket. A copy may be obtained by contacting the person identified under **FOR FURTHER INFORMATION CONTACT.**

## List of Subjects

*14 CFR Part 11*

Administrative practice and procedure, Reporting and recordkeeping requirements.

*14 CFR Part 21*

Aircraft, Aviation safety, Safety, Type certification

*14 CFR Part 25*

Aircraft, Aviation safety, Safety, Type certification

## The Proposed Amendments

Accordingly, the FAA proposes to amend 14 CFR parts 11, 21, and 25 as follows:

## PART 11—GENERAL RULEMAKING PROCEDURES

1. The authority citation for part 11 continues to read as follows:

**Authority:** 49 U.S.C. 106(g), 40101, 40103, 40105, 40109, 40113, 44110, 44502, 44701—44702, 44711, 46102.

2. The first sentence of § 11.11 is revised to read as follows:

### § 11.11 Docket.

Official FAA records relating to rulemaking actions are maintained in current docket form in the Office of the Chief Counsel. These records include: Proposals, notices of proposed rulemaking, written material received in response to notices, petitions for rulemaking and exemptions, written material received in response to summaries of petitions for rulemaking and exemptions, petitions for rehearing or reconsideration, petitions for modification or revocation, notices denying petitions for rulemaking, notices granting or denying exemptions, summaries required to be published under § 11.27, special conditions required as prescribed under §§ 21.16 or 21.101(c), written material received in response to published special conditions, reports of proceedings conducted under § 11.47, notices denying proposals, and final rules or order. * * *

## PART 21—CERTIFICATION PROCEDURES FOR PRODUCTS AND PARTS

3. The authority citation for part 21 continues to read as follows:

**Authority:** 42 U.S.C. 7572; 49 U.S.C. 106(g), 40105, 40113, 44701–44702, 44707, 44709, 44711, 44713, 44715, 45303.

4. Section 21.19 is revised to read as follows:

### § 21.19 Changes requiring a new type certificate.

Each person who proposes to change a product must apply for a new type certificate if the Administrator finds that the proposed change in design, power, thrust, or weight is so extensive that a substantially complete investigation of compliance with the applicable regulations is required.

5. Section 21.101 is revised to read as follows:

### § 21.101 Designation of applicable regulations.

(a) Except as provided in paragraph (b) of this section, an applicant for a change to a type certificate must show that the changed product complies with:

(1) Each regulation in parts 23, 25, 27, 29, 31, 33, and 35 of this chapter that is applicable to the changed product and that is in effect at the date of the application for the change; and

(2) Parts 34 and 36 of this chapter.

(b) The applicant may show that the changed product complies with an earlier amendment of a regulation required by paragraph (a)(1) of this section, and of any other regulation the Administrator finds is directly related, provided that the amended regulation does not precede either the corresponding regulation in §§ 23.2, 25.2, 27.2, or 29.2 of this chapter, or the corresponding regulation incorporated by reference in the type certificate:

(1) For a change the effect of which, combined with all previous relevant changes, the Administrator finds is nonsignificant;

(2) For each area, system, component, equipment, or appliance that the Administrator finds is not affected by the change; and

(3) For each area, system, component, equipment, or appliance that is affected by the change, if the Administrator also finds that compliance with a regulation described in paragraph (a)(1) of this section would not contribute materially to the level of safety of the changed product or would be impractical.

(c) If the Administrator finds that the regulations in effect at the date of the application for the change do not provide adequate standards with respect to the proposed change because of a novel or unusual design feature, the applicant must also comply with special conditions, and amendments to those special conditions, prescribed under the provisions of § 21.16, to provide a level of safety equal to that established by the regulations in effect at the date of the application for the change.

(d) An application for a change to a type certificate for a transport category aircraft is effective for 5 years, and an application for a change to any other type certificate is effective for 3 years. If the change has not been approved, or it is clear that it will not be approved under the time limit established under this paragraph, the applicant may—

(1) File a new application for a change to the type certificate and comply with all the provisions of paragraph (a) of this

section applicable to an original application for a change; or

(2) File for an extension of the original application and comply with the provisions of paragraph (a) of this section for an effective date of application, to be selected by the applicant, not earlier than the date that precedes the date of approval of the change by the time period established under this paragraph for the original application for the change.

(e) For purposes of this section, ''each regulation that is applicable to the change'' includes:

(1) Each regulation that is applicable to the change that would apply to the same change in a product type certificated prior to the codification of the applicable part(s) of this chapter, if that product were type certificated at the date of the application for the change; and

(2) Each regulation that the Administrator found to be appropriate to a product type certificated under §§ 21.24, 21.25, or 21.27, or an aircraft type certificated under § 21.17(b), where the type certificate incorporated regulations from parts 23, 25, 27, 29, 31, or 35, based on the nature of the product design and the proposed change.

6. Paragraph (a) of 21.115 is revised to read as follows:

**§ 21.115 Applicable requirements.**

(a) Each applicant for a supplemental type certificate must show that the altered product meets applicable requirements specified in § 21.101 and, in the case of an acoustical change described in § 21.93(b), show compliance with the applicable noise requirements of part 36 of this chapter and, in the case of an emissions change described in § 21.93(c), show compliance with the applicable fuel venting and exhaust emissions requirements of part 34 of this chapter.

* * * * *

## PART 25—AIRWORTHINESS STANDARDS: TRANSPORT CATEGORY AIRPLANES

7. The authority citation for part 25 continues to read as follows:

**Authority:** 49 U.S.C. 106(g), 40113, 44701–44702, 44704.

8. Paragraph (c) of § 25.2 is revised to read as follows:

**§ 25.2 Special retroactive requirements.**

* * * * *

(c) Compliance with subsequent revisions to the sections specified in paragraph (a) or (b) of this section may be elected or may be required in accordance with § 21.101(a) of this chapter.

Issued in Washington, DC, on April 22, 1997.

**Ava L. Mims,**

*Acting Director, Aircraft Certification Service.*

[FR Doc. 97–11205 Filed 5–1–97; 8:45 am]

BILLING CODE 4910–13–M

federal register

Friday
May 2, 1997

## Part VIII

# Department of Health and Human Services

## Food and Drug Administration

## International Conference on Harmonisation; Draft Guideline on Impurities: Residual Solvents; Availability; Notice

## DEPARTMENT OF HEALTH AND HUMAN SERVICES

### Food and Drug Administration

**[Docket No. 97D–0148]**

### International Conference on Harmonisation; Draft Guideline on Impurities: Residual Solvents; Availability

**AGENCY:** Food and Drug Administration, HHS.

**ACTION:** Notice.

**SUMMARY:** The Food and Drug Administration (FDA) is publishing a draft guideline entitled ''Impurities: Residual Solvents.'' The draft guideline was prepared under the auspices of the International Conference on Harmonisation of Technical Requirements for Registration of Pharmaceuticals for Human Use (ICH). The draft guideline recommends acceptable amounts of residual solvents in pharmaceuticals for the safety of the patient, and recommends the use of less toxic solvents in the manufacture of drug substances and dosage forms.

**DATES:** Written comments by June 16, 1997.

**ADDRESSES:** Submit written comments on the draft guideline to the Dockets Management Branch (HFA–305), Food and Drug Administration, 12420 Parklawn Dr., rm. 1–23, Rockville, MD 20857. Copies of the draft guideline are available from the Drug Information Branch (HFD–210), Center for Drug Evaluation and Research, Food and Drug Administration, 5600 Fishers Lane, Rockville, MD 20857, 301–827–4573.

**FOR FURTHER INFORMATION CONTACT:**

Regarding the guideline: John J. Gibbs, Center for Drug Evaluation and Research (HFD–820), Food and Drug Administration, 5600 Fishers Lane, Rockville, MD 20857, 301–443–3490.

Regarding the ICH: Janet J. Showalter, Office of Health Affairs (HFY–20), Food and Drug Administration, 5600 Fishers Lane, Rockville, MD 20857, 301–827–0864.

**SUPPLEMENTARY INFORMATION:** In recent years, many important initiatives have been undertaken by regulatory authorities and industry associations to promote international harmonization of regulatory requirements. FDA has participated in many meetings designed to enhance harmonization and is committed to seeking scientifically based harmonized technical procedures for pharmaceutical development. One of the goals of harmonization is to identify and then reduce differences in technical requirements for drug development among regulatory agencies.

ICH was organized to provide an opportunity for tripartite harmonization initiatives to be developed with input from both regulatory and industry representatives. FDA also seeks input from consumer representatives and others. ICH is concerned with harmonization of technical requirements for the registration of pharmaceutical products among three regions: The European Union, Japan, and the United States. The six ICH sponsors are the European Commission, the European Federation of Pharmaceutical Industries Associations, the Japanese Ministry of Health and Welfare, the Japanese Pharmaceutical Manufacturers Association, the Centers for Drug Evaluation and Research and Biologics Evaluation and Research, FDA, and the Pharmaceutical Research and Manufacturers of America. The ICH Secretariat, which coordinates the preparation of documentation, is provided by the International Federation of Pharmaceutical Manufacturers Associations (IFPMA).

The ICH Steering Committee includes representatives from each of the ICH sponsors and the IFPMA, as well as observers from the World Health Organization, the Canadian Health Protection Branch, and the European Free Trade Area.

At a meeting held on November 7, 1996, the ICH Steering Committee agreed that a draft guideline entitled ''Impurities: Residual Solvents'' should be made available for public comment. The draft guideline is the product of the Quality Expert Working Group of the ICH. Comments about this draft will be considered by FDA and the Quality Expert Working Group.

Residual solvents in pharmaceuticals are organic volatile chemicals that are used or produced in the synthesis of drug substances or excipients, or in the preparation of drug products. They are not completely removed by practical manufacturing techniques. The draft guideline recommends acceptable amounts of residual solvents in pharmaceuticals for the safety of the patient. The draft guideline recommends the use of less toxic solvents and describes levels considered to be toxicologically acceptable for some residual solvents. The draft guideline applies to residual solvents in drug substances, excipients, and drug products, and to all dosage forms and routes of administration. The draft guideline does not apply to potential new drug substances, excipients, or drug products used during the clinical research stages of development, nor does it apply to existing marketed drug products.

Appendices 4, 5, and 6 (toxicity data for Class 1, Class 2, and Class 3 solvents) are not published with the draft guideline, but may be seen at the Dockets Management Branch (address above) and are available via the Internet using the World Wide Web (WWW) (http://www.fda.gov/cder/guidance.htm).

This guideline represents the agency's current thinking on acceptable amounts of residual solvents in pharmaceuticals. It does not create or confer any rights for or on any person and does not operate to bind FDA or the public. An alternative approach may be used if such approach satisfies the requirements of the applicable statute, regulations, or both.

Interested persons may, on or before June 16, 1997, submit to the Dockets Management Branch (address above) written comments on the draft guideline. Two copies of any comments are to be submitted, except that individuals may submit one copy. Comments are to be identified with the docket number found in brackets in the heading of this document. The draft guideline and received comments may be seen in the office above between 9 a.m. and 4 p.m., Monday through Friday. An electronic version of this guideline is available via Internet using the WWW '(http://www.fda.gov/cder/guidance.htm).

The text of the draft guideline follows:

**Impurities: Residual Solvents**

**1. Introduction**

The objective of this guideline is to recommend acceptable amounts for residual solvents in pharmaceuticals for the safety of the patient. The guideline recommends use of less toxic solvents and describes levels considered to be toxicologically acceptable for some residual solvents.

Residual solvents in pharmaceuticals are defined here as organic volatile chemicals that are used or produced in the synthesis of drug substances or excipients, or in the preparation of drug products. They are not completely removed by practical manufacturing techniques. Appropriate selection of the solvent for the synthesis of drug substance may enhance the yield, or determine characteristics such as crystal form, purity, and solubility. Therefore, the solvent may sometimes be a critical parameter in the synthetic process. This guideline does not address solvents deliberately used as excipients nor does it address solvates.

Since there is no therapeutic benefit from residual solvents, all residual solvents should be removed to the extent possible to meet product specifications, good manufacturing practices, or other quality based

requirements. Drug products should contain no higher levels of residual solvents than can be supported by safety data. Some solvents that are known to cause unacceptable toxicities (Class 1, Table 1) should be avoided in the production of drug substances, excipients, or drug products unless their use can be strongly justified in a risk-benefit assessment. Some solvents associated with less severe toxicity (Class 2, Table 2) should be limited in order to protect patients from potential adverse effects. Ideally, less toxic solvents (Class 3, Table 3) should be used where practical. The complete list of solvents included in this guideline is given in Appendix 1.

The lists are not exhaustive and other solvents can be used and later added to the list. Recommended limits of Class 1 and 2 solvents or classification of solvents may change as new safety data become available. (The process for updating and maintaining the guideline is under review by the ICH Steering Committee.) Supporting safety data in a marketing application for a new drug product containing a new solvent may be based on concepts in this guideline or the concept of qualification of impurities as expressed in the guideline for drug substances (Q3A, Impurities in New Drug Substances) or drug product (Q3B, Impurities in New Drug Products) or all three guidelines.

**2. Scope of the Guideline**

Residual solvents in drug substances, excipients, or drug products are within the scope of this guideline. Therefore, testing should be performed for residual solvents when production or purification processes are known to result in the presence of such solvents. Although manufacturers may choose to test the drug product, a cumulative method may be used to calculate the residual solvent levels in the drug product from the levels in the ingredients used to produce the drug product. If the calculation results in a level below that recommended in this guideline, no testing of the drug product for residual solvents need be considered. If, however, the calculated level is above the recommended level, the drug product should be tested to ascertain whether the formulation process has reduced the relevant solvent level to within the acceptable amount. The drug product should also be tested if a Class 1 or Class 2 solvent is used during its manufacture. If no Class 1 or Class 2 solvent is used in the manufacture or purification of the drug substance, excipient, or drug product, then a statement by the applicant or vendors to that effect would be acceptable and no testing would be necessary.

This guideline does not apply to potential new drug substances, excipients, or drug products used during the clinical research stages of development, nor does it apply to existing marketed drug products.

The guideline applies to all dosage forms and routes of administration. Higher levels of residual solvents may be acceptable for short-term (e.g., 30 days or less) or local application. Justification for these levels should be made on a case-by-case basis.

Given the implications of this guideline for the pharmaceutical industry and suppliers, a period of transition (approximately 2 years) will be provided when the guideline is finalized and implemented according to regional procedures (Step 5). See Appendix 2 for additional background information related to residual solvents.

**3. General Principles**

*3.1 Classification of Residual Solvents by Risk Assessment*

The term ''tolerable daily intake'' (TDI) is used by the International Program on Chemical Safety (IPCS) to describe exposure limits of toxic chemicals, and the term ''acceptable daily intake'' (ADI) is used by the World Health Organization (WHO) and other national and international health authorities and institutes. The new term ''permitted daily exposure'' (PDE) is defined in the present guideline as a pharmaceutically acceptable intake of residual solvents to avoid confusion of differing values for ADI's of the same substance.

Residual solvents assessed in this guideline are listed in Appendix 1 by common names. They were evaluated for their possible risk to human health and placed into one of three classes as follows:

(1) Class 1 solvents: Solvents to be avoided—

Known human carcinogens, strongly suspected human carcinogens, and environmental hazards.

(2) Class 2 solvents: Solvents to be limited—

Nongenotoxic animal carcinogens or possible causative agents of other irreversible toxicity such as neurotoxicity or teratogenicity; solvents suspected of other significant but reversible toxicities.

(3) Class 3 solvents: Solvents with low toxic potential—

Solvents with low toxic potential to man; no health based exposure limit is needed. Class 3 solvents have PDE's of 50 milligrams (mg) or more per day.

*3.2 Methods for Establishing Exposure Limits*

See Appendix 3 for an explanation of the method used to establish exposure limits.

*3.3 Options for Describing Limits of Class 2 Solvents*

Two options are available when setting limits for Class 2 solvents.

*Option 1:* The concentration limits in parts per million (ppm) stated in Table 2 can be used. They were calculated using equation (1) below by assuming a product mass of 10 grams (g) administered daily.

$$(1) \quad \text{Concentration (ppm)} = \frac{1000 \times \text{PDE}}{\text{dose}}$$

Here, the PDE is given in terms of mg/day and dose is given in g/day.

These limits are considered acceptable for all substances, excipients, or products whatever the dose and use. Therefore, this option may be applied if the daily dose is not known or fixed. Any excipient or drug substance that meets the limits given in Option 1 therefore may be used in any drug product. However, it is not considered necessary for each component of the drug product to comply with the limits given in Option 1.

*Option 2:* The PDE in terms of mg/day as stated in Table 2 can be used with the known maximum daily dose and equation (1) above to determine the concentration of residual solvent allowed in drug product. Such limits are considered acceptable provided that it has been demonstrated that the level has been reduced to the practical minimum, i.e., the limits are realistic in relation to the manufacturing capability and reflect contemporary manufacturing standards.

Option 2 may be applied by adding the amounts of a residual solvent present in each of the components of the drug product. The sum of the amounts of solvent per day should be less than that given by the PDE.

Consider an example of the use of Option 1 and Option 2 applied to acetonitrile in a drug product. The permitted daily exposure to acetonitrile is 4.1 mg per day; thus the Option 1 limit is 410 ppm. The maximum administered daily mass of a drug product is 5.0 g, and the drug product contains two excipients. The composition of the drug product and content of residual acetonitrile is given in the following table.

| Component | Amount in formulation | Acetonitrile content | Daily exposure |
|---|---|---|---|
| Drug substance | 0.3 g | 800 ppm | 0.24 mg |
| Excipient 1 | 0.9 g | 400 ppm | 0.36 mg |
| Excipient 2 | 3.8 g | 800 ppm | 3.04 mg |

| Component | Amount in formulation | Acetonitrile content | Daily exposure |
|---|---|---|---|
| Drug product | 5.0 g | 728 ppm | 3.64 mg |

Excipient 1 meets the Option 1 limit, but the drug substance, excipient 2, and drug product do not meet the Option 1 limit. Nevertheless, the product meets the Option 2 limit of 4.1 mg per day and thus conforms to the recommendations in this guideline.

Consider another example using acetonitrile as residual solvent. The maximum administered daily mass of a drug product is 5.0 g, and the drug product contains two excipients. The composition of the drug product and content of residual acetonitrile is given in the following table.

| Component | Amount in formulation | Acetonitrile content | Daily exposure |
|---|---|---|---|
| Drug substance | 0.3 g | 800 ppm | 0.24 mg |
| Excipient 1 | 0.9 g | 2,000 ppm | 1.80 mg |
| Excipient 2 | 3.8 g | 800 ppm | 3.04 mg |
| Drug product | 5.0 g | 1,016 ppm | 5.08 mg |

In this example, the product meets neither the Option 1 nor the Option 2 limit according to this summation. The manufacturer could test the drug product to determine if the formulation process reduced the level of acetonitrile. If the level of acetonitrile was not reduced during formulation to the allowed limit, then the manufacturer of the drug product should take steps to reduce the amount of acetontirile in the drug product. If all of these steps fail to reduce the level of residual solvent, in exceptional cases the manufacturer could provide a summary of efforts made to reduce the solvent level to meet the guideline value, and provide a risk-benefit analysis to support allowing the product with residual solvent at a higher level.

*3.4 Analytical Procedures*

Residual solvents are typically determined using chromatographic techniques such as gas chromatography. Any harmonized procedures for determining levels of residual solvents as described in the pharmacopoeias should be used, if feasible. Otherwise, manufacturers would be free to select the most appropriate validated analytical procedure for a particular application. If only Class 3 solvents are present, a nonspecific method such as loss on drying may be used.

Validation of methods for residual solvents should conform to ICH guidelines ''Validation of Analytical Procedures: Definition and Terminology'' and ''Validation of Analytical Procedures: Methodology.''

**4. Limits of Residual Solvents**

*4.1 Solvents to Be Avoided*

Solvents in Class 1 should not be employed in the manufacture of drug substances, excipients, and drug products because of their unacceptable toxicity or their deleterious environmental effect. However, if their use is unavoidable in order to produce a drug product with a significant therapeutic advance, then their levels should be restricted as shown in Table 1, unless otherwise justified. Toxicity data for Class 1 solvents are summarized in Appendix 4. The solvent 1,1,1,-Trichloroethane is included in Table 1 because it is an environmental hazard. The stated limit of 1500 ppm is based on a review of the safety data.

TABLE 1.—CLASS 1 SOLVENTS IN PHARMACEUTICAL PRODUCTS (SOLVENTS THAT SHOULD BE AVOIDED)

| Solvent | Concentration Limit ppm | Concern |
|---|---|---|
| Benzene | 2 | Carcinogen |
| Carbon tetrachloride | 4 | Toxic and environmental hazard |
| 1,2-Dichloroethane | 5 | Toxic |
| 1,1-Dichloroethene | 8 | Toxic |
| 1,1,1-Trichloroethane | 1,500 | Environmental hazard |

*4.2 Solvents to Be Limited*

Solvents in Table 2 should be limited in pharmaceutical products. PDE's are given to the nearest 0.1 mg/day and concentrations are given to the nearest 10 ppm. The stated values do not reflect the necessary analytical precision of determination. Precision should be determined as part of the validation of the method. Available toxicity data are summarized in Appendix 5.

TABLE 2.—CLASS 2 SOLVENTS IN PHARMACEUTICAL PRODUCTS

| Solvent | PDE (mg/day) | Concentration Limit (ppm) |
|---|---|---|
| Acetonitrile | 4.1 | 410 |
| Chlorobenzene | 3.6 | 360 |
| Chloroform | 0.6 | 60 |
| Cyclohexane | 38.8 | 3,880 |
| 1,2-Dichloroethene | 18.7 | 1,870 |
| Dichloromethane | 6.0 | 600 |
| 1,2-Dimethoxyethane | 1.0 | 100 |
| N,N-Dimethylacetamide | 10.9 | 1,090 |

TABLE 2.—CLASS 2 SOLVENTS IN PHARMACEUTICAL PRODUCTS—Continued

| Solvent | PDE (mg/day) | Concentration Limit (ppm) |
|---|---|---|
| N,N-Dimethylformamide | 8.8 | 880 |
| 1,4-Dioxane | 3.8 | 380 |
| 2-Ethoxyethanol | 1.6 | 160 |
| Ethyleneglycol | 3.1 | 310 |
| Formamide | 2.2 | 220 |
| Hexane | 2.9 | 290 |
| Methanol | 30.0 | 3,000 |
| 2-Methoxyethanol | 0.5 | 50 |
| Methylbutyl ketone | 0.5 | 50 |
| Methylcyclohexane | 11.8 | 1,180 |
| N-Methylpyrrolidone | 48.4 | 4,840 |
| Nitromethane | 0.5 | 50 |
| Pyridine | 2.0 | 200 |
| Sulfolane | 1.6 | 160 |
| Tetralin | 1.0 | 100 |
| Toluene | 8.9 | 890 |
| 1,1,2-Trichloroethene | 0.8 | 80 |
| Xylene[1] | 21.7 | 2,170 |

[1] usually 60% m-xylene, 14% p-xylene, 9% o-xylene with 17% ethyl benzene.

*4.3 Solvents with Low Toxic Potential*

Solvents in Class 3 (shown in Table 3) may be regarded as less toxic and of lower risk to human health. Class 3 includes no solvent known as a human health hazard at levels normally accepted in pharmaceuticals. However, there are no long-term toxicity or carcinogenicity studies for many of the solvents in Class 3. Available data indicate that they are less toxic in acute or short-term studies and negative in genotoxicity studies. It is considered that amounts of these residual solvents of 50 mg per day or less (corresponding to 5000 ppm or 0.5 percent under Option 1) would be acceptable without justification. Higher amounts may also be acceptable provided they are realistic in relation to manufacturing capability and good manufacturing practice. Available toxicity data for Class 3 solvents are summarized in Appendix 6.

TABLE 3.—CLASS 3 SOLVENTS WHICH SHOULD BE LIMITED BY GMP OR OTHER QUALITY-BASED REQUIREMENTS

| | |
|---|---|
| Acetic Acid | Heptane |
| Acetone | Isobutyl acetate |
| Anisole | Isopropyl acetate |
| 1-Butanol | Methyl acetate |
| 2-Butanol | 3-Methyl-1-butanol |
| Butyl Acetate | Methylethyl ketone |
| *tert*-Butylmethyl ether | Methylisobutyl ketone |
| Cumene | 2-Methyl-1-propanol |
| Dimethylsulfoxide | Pentane |
| Ethanol | 1-Propanol |
| Ethyl acetate | 1-Pentanol |
| Ethyl ether | 2-Propanol |
| Ethyl formate | Propyl acetate |
| Formic acid | Tetrahydrofuran |

*4.4 Additional Solvents*

The following solvents (Table 4) may also be of interest to manufacturers of excipients, drug substances, or drug products. However, no adequate toxicological data on which to base a PDE were found. Manufacturers should supply justification for residual levels of these solvents in pharmaceutical products.

TABLE 4.—SOLVENTS FOR WHICH NO ADEQUATE TOXICOLOGICAL DATA WERE FOUND

| | |
|---|---|
| 1,1-Diethoxypropane | Methylisopropyl ketone |
| 1,1-Dimethoxymethane | Methyltetrahydrofuran |
| 2,2-Dimethoxypropane | Petroleum ether |
| Isooctane | Trichloroacetic acid |
| Isopropyl ether | Trifluoroacetic acid |

**Glossary**

*Genotoxic carcinogens:* Carcinogens that produce cancer by affecting genes or chromosomes.

*LOAEL:* Abbreviation for lowest-observed-adverse effect level.

*LOEL:* Abbreviation for lowest-observed effect level.

*Lowest-observed-adverse effect level:* The lowest dose of a substance in a study or group of studies that produces biologically significant increases in frequency or severity

of harmful effects in the exposed humans or animals.

*Lowest-observed effect level:* The lowest dose of substance in a study or group of studies that produces biologically significant increases in frequency or severity of any effects in the exposed humans or animals.

*Modifying factor:* A factor determined by professional judgment of a toxicologist and applied to bioassay data to relate that data safely to humans.

*NEL:* Abbreviation for no effect level.

*Neurotoxicity:* The ability of a substance to cause adverse effects on the nervous system.

*NOAEL:* Abbreviation for no-observed-adverse effect level.

*No effect level:* The dose of substance at which there are no biologically significant increases in frequency or severity of any effects in the exposed humans or animals.

*NOEL:* Abbreviation for no-observed effect level.

*No-observed-adverse effect level:* The dose of substance at which there are no biologically significant increases in frequency or severity of harmful effects in the exposed humans or animals.

*No-observed-effect level:* The dose of substance at which there are no biologically significant increases in frequency or severity of any observed effects in the exposed humans or animals.

*PDE:* Abbreviation for permitted daily exposure.

*Permitted daily exposure:* The maximum acceptable intake per day of residual solvent in pharmaceutical products.

*Reversible toxicity:* The occurrence of harmful effects that are caused by a substance and which disappear after exposure to the substance ends.

*Strongly suspected human carcinogen:* A substance for which there is no epidemiological evidence of carcinogenesis but there are positive genotoxicity data and clear evidence of carcinogenesis in rodents.

*Teratogenicity:* The occurrence of structural malformations in a developing fetus when a substance is administered during pregnancy.

**Appendix 1. List of Solvents Included in the Guideline**

(Note: The chemical structures have been deleted.)

| *Solvent* | *Other Names* | *Class* |
|---|---|---|
| Acetic acid | Ethanoic acid | Class 3 |
| Acetone | 2-Propanone<br>Propan-2-one | Class 3 |
| Acetonitrile | | Class 2 |
| Anisole | Methoxybenzene | Class 3 |
| Benzene | Benzol | Class 1 |
| 1-Butanol | *n*-Butyl alcohol<br>Butan-l-ol | Class 3 |
| 2-Butanol | *sec*-Butyl alcohol<br>Butan-2-ol | Class 3 |
| Butyl acetate | Acetic acid butyl ester | Class 3 |
| *tert*-Butylmethyl ether | 2-Methoxy-2-methyl-propane | Class 3 |
| Carbon tetrachloride | Tetrachloromethane | Class 1 |
| Chlorobenzene | | Class 2 |
| Chloroform | Trichloromethane | Class 2 |
| Cumene | Isopropylbenzene<br>(1-Methyl)ethylbenzene | Class 3 |
| Cyclohexane | Hexamethylene | Class 2 |
| 1,2-Dichloroethane | *sym*-Dichloroethane<br>Ethylene dichloride<br>Ethylene chloride | Class 1 |
| 1,1-Dichloroethene | 1,1-Dichloroethylene<br>Vinylidene chloride | Class 1 |
| 1,2-Dichloroethene | 1,2-Dichloroethylene<br>Acetylene dichloride | Class 2 |
| Dichloromethane | Methylene chloride | Class 2 |
| 1,2-Dimethoxyethaneether | Ethyleneglycol dimethyl<br>Monoglyme<br>Dimethyl Cellosolve | Class 2 |
| N,N-Dimethylacetamide | DMA | Class 2 |
| N,N-Dimethylformamide | DMF | Class 2 |
| Dimethyl sulfoxide | Methylsulfinylmethane<br>Methyl sulfoxide<br>DMSO | Class 3 |
| 1,4-Dioxane | p-Dioxane<br>[1,4]Dioxane | Class 2 |
| Ethanol | Ethyl alcohol | Class 3 |
| 2-Ethoxyethanol | Cellosolve | Class 2 |
| Ethyl acetate | Acetic acid ethyl ester | Class 3 |
| Ethyleneglycol | 1,2-Dihydroxyethane<br>1,2-Ethanediol | Class 2 |
| Ethyl ether | Diethyl ether<br>Ethoxyethane<br>1,1′-Oxybisethane | Class 3 |
| Ethyl formate | Formic acid ethyl ester | Class 3 |
| Formamide | Methanamide | Class 2 |
| Formic acid | | Class 3 |
| Heptane | n-Heptane | Class 3 |
| Hexane | n-Hexane | Class 2 |
| Isobutyl acetate | Acetic acid isobutyl ester | Class 3 |
| Isopropyl acetate | Acetic acid isopropyl ester | Class 3 |
| Methanol | Methyl alcohol | Class 2 |

| *Solvent* | *Other Names* | *Class* |
|---|---|---|
| 2-Methoxyethanol | Methyl Cellosolve | Class 2 |
| Methyl acetate | Acetic acid methyl ester | Class 3 |
| 3-Methyl-l-butanol | Isoamyl alcohol<br>Isopentyl alcohol<br>3-Methylbutan-l-ol | Class 3 |
| Methylbutyl ketone | 2-Hexanone<br>Hexan-2-one | Class 2 |
| Methylcyclohexane | Cyclohexylmethane | Class 2 |
| Methylethyl ketone | 2-Butanone<br>MEK<br>Butan-2-one | Class 3 |
| Methylisobutyl ketone | 4-Methylpentan-2-one<br>4-Methyl-2-pentanone<br>MIBK | Class 3 |
| 2-Methyl-l-propanol | Isobutyl alcohol<br>2-Methylpropan-l-ol | Class 3 |
| N-Methylpyrrolidone | 1-Methylpyrrolidin-2-one<br>1-Methyl-2-pyrrolidinone | Class 2 |
| Nitromethane | | Class 2 |
| Pentane | *n*-Pentane | Class 3 |
| 1-Pentanol | Amyl alcohol<br>Pentan-l-ol<br>Pentyl alcohol | Class 3 |
| 1-Propanol | Propan-1-ol<br>Propyl alcohol | Class 3 |
| 2-Propanol | Propan-2-ol<br>Isopropyl alcohol | Class 3 |
| Propyl acetate | Acetic acid propyl ester | Class 3 |
| Pyridine | | Class 2 |
| Sulfolane | Tetrahydrothiophene 1,1-dioxide | Class 2 |
| Tetrahydrofuran | Tetramethylene oxide<br>Oxacyclopentane | Class 3 |
| Tetralin | 1,2,3,4-Tetrahydro-naphthalene | Class 2 |
| Toluene | Methylbenzene | Class 2 |
| 1,1,1-Trichloroethane | Methylchloroform | Class 1 |
| 1,1,2-Trichloroethene | Trichloroethene | Class 2 |
| Xylene[1] | Dimethybenzene<br>Xylol | Class 2 |

[1] Usually 60% m-xylene, 14% p-xylene, 9% o-xylene with 17% ethyl benzene

## Appendix 2. Additional Background

### *A2.1 Environmental Regulation of Organic Volatile Solvents*

Several of the residual solvents frequently used in the production of pharmaceuticals are listed as toxic chemicals in the Environmental Health Criteria (EHC) monographs and the Integrated Risk Information System (IRIS). The objectives of such groups as the International Programme on Chemical Safety (IPCS), the U.S. Environmental Protection Agency (EPA), and the U.S. FDA include the determination of acceptable exposure levels. The goal is protection of human health and maintenance of environmental integrity against the possible deleterious effects of chemicals resulting from long-term environmental exposure. The methods involved in the estimation of maximum safe exposure limits are usually based on long-term studies. When long-term study data are unavailable, shorter term study data can be used with modification of the approach such as use of larger safety factors. The approach described therein relates primarily to long-term or *lifetime exposure of the general population* in the ambient environment, i.e., ambient air, food, drinking water, and other media.

### *A2.2 Residual Solvents in Pharmaceuticals*

Exposure limits in this guideline are established by referring to methodologies and toxicity data described in EHC and IRIS monographs. However, some specific assumptions about residual solvents to be used in the synthesis and formulation of pharmaceutical products should be taken into account in establishing exposure limits. They are as follows:

(1) Patients (not the general population) use pharmaceuticals to treat their diseases or for prophylaxis to prevent infection or disease.

(2) The assumption of lifetime patient exposure is not necessary for most pharmaceutical products but may be appropriate as a working hypothesis to reduce risk to human health.

(3) Residual solvents are unavoidable components in pharmaceutical production and will often be a part of drug products.

(4) Residual solvents should not exceed recommended levels except in exceptional circumstances.

(5) Data from toxicological studies that are used to determine acceptable levels for residual solvents should have been generated using appropriate protocols such as those described, for example, by the Organization for Economic Cooperation and Development, EPA, and the FDA Red Book.

## Appendix 3. Methods for Establishing Exposure Limits

The Gaylor-Kodell model of risk assessment (Gaylor, D. W., and R. L. Kodell, ''Linear Interpolation Algorithm for Low Dose Assessment of Toxic Substance,'' *Journal of Environmental Pathology and Toxicology*, 4:305, 1980) is appropriate for Class 1 carcinogenic solvents. Only in cases where reliable carcinogenicity data are available should extrapolation by the use of mathematical models be applied to setting exposure limits. Exposure limits for Class 1 solvents could be determined with the use of a large safety factor (i.e., 10,000 to 100,000) with respect to the NOEL. Detection and quantitation of these solvents should be by state-of-the-art analytical techniques.

Acceptable exposure levels in this guideline for Class 2 solvents were established by calculation of PDE values according to the procedures for setting exposure limits in pharmaceuticals (*Pharmacopeial Forum*, Nov.-Dec. 1989) and the method adopted by IPCS for Assessing Human Health Risk of Chemicals (Environmental Health Criteria 170, WHO, 1994). These methods are similar to those

used by the U.S. EPA (IRIS) and the U.S. FDA (Red Book) and others. The method is outlined here to give a better understanding of the origin of the PDE values. It is necessary to perform these calculations in order to use the PDE values tabulated in section 4 of this document.

PDE is derived from the NOEL or the LOEL in the most relevant animal study as follows:

$$\text{PDE} = \frac{\text{NOEL (or LOEL) x Weight Adjustment}}{\text{Modifying Factors}}$$

The PDE is preferably derived from a NOEL. If no NOEL is obtained, the LOEL may be used. Modifying factors proposed here, for relating the data to humans, are the same kind of ''uncertainty factors'' used in Environmental Health Criteria (Environmental Health Criteria 170, WHO, Geneva, 1994) and ''modifying factors'' or ''safety factors'' in *Pharmacopeial Forum*. The assumption of 100 percent systemic exposure is used in all calculations regardless of route of administration.

The modifying factors are as follows:

*Interspecies differences:*

Differences from animals to human.

Max. 12; e.g., factors of 1 for human, 2 for dogs, and 12 for mice.

*Intra-individual differences:*

Individual difference in humans.

Factor of 10 is generally given for all organic solvents and 10 is used consistently in this guideline.

*Quality and type of available data:*

Duration of study; lack of determination of NOEL.

Max. 10; e.g., a factor of 1 is used for a study that lasts at least one-half lifetime (1 year for rodents, 7 years for dogs). A factor of 2 used for a 6-month study in rodents, 5 for a 13-week study, and 10 for a study of 4 weeks or less. When LOEL is used, a factor up to 10 could be used depending on the severity of the toxicity.

*Additional modifying factors:*

In cases where the NOAEL is derived for critical effects such as nongenotoxic carcinogenicity, neurotoxicity, or teratogenicity.

Max. 10; e.g., factor of 10 when teratogenicity is not accompanied by significant maternal toxicity. A factor of 3 or 5 might be used for less severe toxicity.

The weight adjustment compensates for the difference in body weight between the experimental animal and humans. This guideline assumes a body weight of 50 kilograms (kg) for humans. It is recognized that some adult patients weigh less than 50 kg; these patients are considered to be accommodated by the built-in safety factors used to determine a PDE. Adjustments may be made for pharmaceuticals intended for the pediatric population.

The expressions for PDE in this document are given in the following format:

$$\text{PDE} = \frac{\text{NOEL (or LOEL) x Weight Adjustment}}{\text{F1 x F2 x F3 x F4 x F5}}$$

where:

F1 = A factor to account for extrapolation between species.

F1 = 5 for extrapolation from rats to humans.

F1 = 12 for extrapolation from mice to humans.

F1 = 2 for extrapolation from dogs to humans.

F1 = 2.5 for extrapolation from rabbit to humans.

F1 = 10 for extrapolation from other animals to humans.

F2 = A factor of 10 to account for variability between individuals.

F3 = A variable factor to account for toxicity studies of short-term exposure.

F4 = A factor that may be applied in cases of severe toxicity. In studies of reproductive toxicity, the following factors are used:

F4 = 1 for fetal toxicity associated with maternal toxicity.

F4 = 5 for fetal toxicity without maternal toxicity.

F4 = 5 for a teratogenic effect with maternal toxicity.

F4 = 10 for a teratogenic effect without maternal toxicity.

F5 = A variable factor that may be applied if the NEL was not established.

As an example of the application of this equation, consider the toxicity study of acetonitrile in mice that is reported in Appendix 5. The NOEL is calculated to be 50.7 mg $kg^{-1}day^{-1}$. The PDE for acetonitrile in this study is calculated as follows:

$$\text{PDE} = \frac{50.7 \text{ mg kg}^{-1} \text{ day}^{-1} \text{ x } 50 \text{ kg}}{12 \text{ x } 10 \text{ x } 5 \text{ x } 1 \text{ x } 1} = 4.22 \text{ mg day}^{-}$$

In this example,

F1 = 12 to account for the extrapolation from mice to humans.

F2 = 10 to account for differences between individual humans.

F3 = 5 because the duration of the study was only 13 weeks.

F4 = 1 because no severe toxicity was encountered.

F5 = 1 because the NEL was determined.

Calculations in the appendices follow this format.

The following values are used in the calculations in this document:

| | |
|---|---|
| Rat body weight | 425 g |
| Pregnant rat body weight | 330 g |
| Mouse body weight | 28 g |
| Pregnant mouse body weight | 30 g |
| Guinea pig body weight | 500 g |
| Rhesus monkey body weight | 2.5 kg |
| Rabbit body weight (pregnant or not) | 4 kg |
| Beagle dog body weight | 11.5 kg |
| Rat respiratory volume | 290 liter (L)/day |
| Mouse respiratory volume | 43 L/day |
| Rabbit respiratory volume | 1,440 L/day |
| Guinea pig respiratory volume | 430 L/day |
| Human respiratory volume | 28,800 L/day |
| Dog respiratory volume | 9,000 L/day |
| Monkey respiratory volume | 1,150 L/day |
| Mouse water consumption | 5 milliliter (mL)/day |
| Rat water consumption | 30 mL/day |
| Rat food consumption | 30 g/day |

The equation for an ideal gas, PV = nRT, is used to convert concentrations of gases used in inhalation studies from units of ppm to units of mg/L or mg/cubic meter ($m^3$). Consider as an example the inhalation study of carbon tetrachloride (molecular weight 153.84) reported in Appendix 4.

$$\frac{n}{V} = \frac{P}{RT} = \frac{300 \times 10^{-6}\ \text{atm} \times 153840\ \text{mg mol}^{-1}}{0.082\ \text{L atm K}^{-1}\ \text{mol}^{-1} \times 298\ \text{K}} = \frac{46.15\ \text{mg}}{24.45\ \text{L}} = 1.89\ \text{mg/L}$$

The relationship 1000 L = 1 $m^3$ is used to convert to mg/$m^3$.

Dated: April 25, 1997.

**William K. Hubbard,**

*Associate Commissioner for Policy Coordination.*

[FR Doc. 97–11439 Filed 5–1–97; 8:45 am]

BILLING CODE 4160–01–F

federal register

Friday
May 2, 1997

# Part IX

# Department of Health and Human Services

## Food and Drug Administration

## International Conference on Harmonisation; Availability of Draft Guideline on Quality of Biotechnological/Biological Products: Derivation and Characterization of Cell Substrates Used for Production of Biotechnological/Biological Products; Notice

## DEPARTMENT OF HEALTH AND HUMAN SERVICES

### Food and Drug Administration

**[Docket No. 97D–0159]**

### International Conference on Harmonisation; Draft Guideline on Quality of Biotechnological/Biological Products: Derivation and Characterization of Cell Substrates Used for Production of Biotechnological/Biological Products; Availability

**AGENCY:** Food and Drug Administration, HHS.

**ACTION:** Notice.

**SUMMARY:** The Food and Drug Administration (FDA) is publishing a draft guideline entitled ''Quality of Biotechnological/Biological Products: Derivation and Characterization of Cell Substrates Used for Production of Biotechnological/Biological Products.'' The draft guideline was prepared under the auspices of the International Conference on Harmonisation of Technical Requirements for Registration of Pharmaceuticals for Human Use (ICH). The draft guideline provides guidance on appropriate standards for the derivation and characterization of cell substrates used in the production of biotechnological/biological products, and provides recommendations on the information in these areas that should be presented in marketing applications.

**DATES:** Written comments by June 16, 1997.

**ADDRESSES:** Submit written comments on the draft guideline to the Dockets Management Branch (HFA–305), Food and Drug Administration, 12420 Parklawn Dr., rm. 1–23, Rockville, MD 20857. Copies of the draft guideline are available from the Drug Information Branch (HFD–210), Center for Drug Evaluation and Research, Food and Drug Administration, 5600 Fishers Lane, Rockville, MD 20857, 301–827–4573. Single copies of the draft guideline may be obtained by mail from the Office of Communication, Training and Manufacturers Assistance (HFM–40), Center for Biologics Evaluation and Research (CBER), 1401 Rockville Pike, Rockville, MD 20852–1448 or by calling the CBER Voice Information System at 1–800–835–4709 or 301–827–1800. Copies may be obtained from CBER's FAX Information System at 1–888–CBER–FAX or 301–827–3844.

**FOR FURTHER INFORMATION CONTACT:**

Regarding the guideline: Ruth H. Wolff, Center for Biologics Evaluation and Research (HFM–594), Food and Drug Administration, 1401 Rockville Pike, Rockville, MD 20852, 301–827–5103.

Regarding the ICH: Janet J. Showalter, Office of Health Affairs (HFY–20), Food and Drug Administration, 5600 Fishers Lane, Rockville, MD 20857, 301–827–0864.

**SUPPLEMENTARY INFORMATION:** In recent years, many important initiatives have been undertaken by regulatory authorities and industry associations to promote international harmonization of regulatory requirements. FDA has participated in many meetings designed to enhance harmonization and is committed to seeking scientifically based harmonized technical procedures for pharmaceutical development. One of the goals of harmonization is to identify and then reduce differences in technical requirements for drug development among regulatory agencies.

ICH was organized to provide an opportunity for tripartite harmonization initiatives to be developed with input from both regulatory and industry representatives. FDA also seeks input from consumer representatives and others. ICH is concerned with harmonization of technical requirements for the registration of pharmaceutical products among three regions: The European Union, Japan, and the United States. The six ICH sponsors are the European Commission, the European Federation of Pharmaceutical Industries Associations, the Japanese Ministry of Health and Welfare, the Japanese Pharmaceutical Manufacturers Association, the Centers for Drug Evaluation and Research and Biologics Evaluation and Research, FDA, and the Pharmaceutical Research and Manufacturers of America. The ICH Secretariat, which coordinates the preparation of documentation, is provided by the International Federation of Pharmaceutical Manufacturers Associations (IFPMA).

The ICH Steering Committee includes representatives from each of the ICH sponsors and the IFPMA, as well as observers from the World Health Organization, the Canadian Health Protection Branch, and the European Free Trade Area.

On January 10, 1997, the ICH Steering Committee agreed that a draft guideline entitled ''Quality of Biotechnological/Biological Products: Derivation and Characterization of Cell Substrates Used for Production of Biotechnological/Biological Products'' should be made available for public comment. The draft guideline is the product of the Quality Expert Working Group of the ICH. Comments about this draft will be considered by FDA and the Quality Expert Working Group.

The draft guideline provides guidance on appropriate standards for the derivation of human and animal cell lines and microbial cells to be used to prepare biotechnological/biological products, and for the preparation and characterization of cell banks to be used for production. The draft guideline recommends information in these areas that should be presented in marketing applications for biotechnological/biological products.

This guidance document represents the agency's current thinking on standards for the derivation and characterization of cell substrates used for production of biotechnological/biological products. It does not create or confer any rights for, or on, any person and does not operate to bind FDA, or the public. An alternative approach may be used if such approach satisfies the requirements of the applicable statute, regulations, or both.

Interested persons may, on or before June 16, 1997, submit to the Dockets Management Branch (address above) written comments on the draft guideline. Two copies of any comments are to be submitted, except that individuals may submit one copy. Comments are to be identified with the docket number found in brackets in the heading of this document. The draft guideline and received comments may be seen in the office above between 9 a.m. and 4 p.m., Monday through Friday. An electronic version of this guideline is available via Internet using the World Wide Web (WWW) (http://www.fda.gov/cder/guidance.htm). To connect to CBER's WWW site, type http://www.fda.gov/cber/cberftp.html.

The text of the draft guideline follows:

**Quality of Biotechnological/Biological Products: Derivation and Characterization of Cell Substrates Used for Production of Biotechnological/Biological Products**

**1.0 Introduction**

*1.1 Objective*

The objective of this guideline is to provide broad guidance on appropriate standards for the derivation of human and animal cell lines and microbial cells to be used to prepare biotechnological/biological products defined in section 1.3, Scope, and for the preparation and characterization of cell banks to be used for production. The document, therefore, provides recommendations on the information in these areas that should be presented in marketing applications for these products.

*1.2 Rationale*

Historically, some quality concerns for cell-derived biological products have

originated from the presence of adventitious contaminants or from the properties of the cells used to prepare the product. Recombinant DNA (rDNA)-derived products also carry quality concerns regarding the expression construct contained in the cell substrate. Thus, it is well established that the properties of the cell substrate and events linked to the cell substrate can affect resultant product quality and safety and, further, that effective quality control of these products requires appropriate controls on all aspects of handling the cell substrate.

This document complements other guidelines to provide a comprehensive approach to quality issues arising from biological aspects of processing products from metazoan and microbial cell culture.

*1.3 Scope*

This guideline covers cell substrates having a cell banking system. In this document, ''cell substrate'' refers to microbial cells or cell lines derived from human or animal sources that possess the full potential for generation of the desired biotechnological/biological products for human in vivo or ex vivo use. Reagents for in vitro diagnostic use are outside the scope of this document. Animal sources of cell lines include all those of metazoan origin. Both continuous cell lines of indefinite in vitro lifespan and diploid cells of finite in vitro lifespan are included. Microbial sources include bacteria, fungi, yeast, and other unicellular life forms.

Biotechnological/biological products refers to any product prepared from cells cultivated from cell banks with the exception of microbial metabolites such as, for example, antibiotics, amino acids, carbohydrates, and other low molecular weight substances. Cell banks used to prepare gene therapy products or vaccines should follow the recommendations presented in this document. Some biological products, such as certain viral vaccines, are prepared in primary cell cultures derived directly from animal tissues or organs. Primary cells are not banked and therefore are not addressed by this document. However, other considerations which may apply to primary cells are discussed further in appendix 1 of this document.

**2.0 Guidelines**

*2.1.0 Source, History, and Generation of the Cell Substrate*

2.1.1 Introduction

It is important to provide supportive documentation which describes the history of the cell substrate that is used in the manufacture of a biotechnological/biological product, as well as any parental cell line from which it was totally or partially derived. Events during the research and development phases of the cell substrate may contribute significantly to assessment of the risks associated with the use of that particular cell substrate for production. The information supplied in this regard is meant to facilitate an overall evaluation which will ensure the quality and safety of the product.

Careful records of the manipulation of the cell substrate should be maintained throughout its development. Description of cell history is only one tool of many used for cell substrate characterization. In general, deficiencies in documented history may not be an impediment to product approval, but extensive deficiencies will result in increased reliance on other methods to characterize the cell substrate.

*2.1.2 Source*

The source of cells (laboratory or culture collection) from which the cell substrate was derived should be stated, the materials and methods used should be described, and relevant references from the scientific literature should be cited. Information obtained directly from the source laboratory is preferred. When this is not available, literature references may be utilized.

For human cell lines, it is relevant to describe the following characteristics of the original donor: Tissue or organ of origin, ethnic and geographical origin, age, sex, and general physiological condition. If known, the state of health or medical history of the donor should be reported along with the results of any tests of the donor for pathogenic agents. Specifically for human diploid fibroblasts, the age of the donor may influence the in vitro lifespan of the cell line and this information should be provided if available. For animal cell lines, relevant descriptions of the source include species, strains, breeding conditions, tissue or organ of origin, geographical origin, age and sex, the results of tests for pathogenic agents, and general physiological condition of the original donor.

For microbes, manufacturers should describe the species, strain, and known genotypic and phenotypic characteristics of the organism from which the cell substrate was derived. Manufacturers should also describe the pathogenicity, toxin production, and other biohazard information, if any.

*2.1.3 Cell History*

The cultivation history of the cells should be documented. The method originally used for the isolation of the cells should be described as well as the procedures used in the culturing of the cells in vitro and any procedures used to establish cell lines (for example, use of any physical, chemical, or biological procedure, or added nucleotide sequences). A description of any genetic manipulation or selection should be provided. All available information regarding the identification, characteristics, and results of testing of these cells for endogenous and adventitious agents should be provided.

For continuous cell lines of metazoan origin, it is usually adequate to quantitate culture duration by estimation of either number of population doublings, or number of subcultivations at defined dilution ratio, or time in days. For diploid cell lines possessing finite in vitro lifespan, accurate estimation of the number of population doublings during all stages of research, development, and manufacturing is important. For microbial cells, documentation of subcultivation frequency after cell substrate generation is adequate.

Regarding the generation of cell substrates, applicants should provide a thorough discussion of procedures which would provide exposure to infectious agents. Constituents of the culture medium should be described, in particular, information regarding exposure of the cells to materials of human or animal origin such as serum, enzymes, hydrolysates, or other living cells. The description should include the source, method of preparation and control, test results, and quality assurance. Relevant literature on these points may be referenced when available. This information will allow a detailed analysis of potential entry routes for adventitious agents from these sources, and will be part of the risk-benefit analysis of the product.

*2.1.4 Generation of the Cell Substrate*

A crucial step is the choice of a suitable parental cell line. For recombinant products, a parental cell line is typically the untransfected recipient cell line. The use of characterized parental cell banks is suggested, but is not considered essential. A characterized parental cell bank may be of benefit, especially when multiple cell substrates are generated from the same parental cell type by providing a database of information on which the quality assessment of the Master Cell Bank (MCB) can be built. For example, the myeloma cell line may be banked as a parental cell line for hybridomas.

During the generation of the cell substrate, one or more specific procedures may be utilized in the ultimate development of the desired characteristics. These may include, for example, cell fusion, transfection, selection, colony isolation, cloning, gene amplification, and adaptation to specific culture conditions or media. Information regarding the methodologies utilized in developing the cell substrate can help to provide a clear understanding of the history of the cell substrate. Some cell substrates, such as human diploid fibroblasts, may not need extensive manipulation or cloning prior to cell banking.

For recombinant products, the cell substrate is the transfected cell containing the desired sequences which has been cloned from a single cell progenitor. For further information on generation of rDNA-modified cell substrates, consult other relevant (e.g., regional or international) guidelines. For nonrecombinant products or nonrecombinant vaccines, the cell substrate is the cell from the parental cell line chosen for preparation of the MCB without further modification. For products derived from hybridomas, the cell substrate is the hybridoma cell line derived by fusion of the parental myeloma cell line with other parental cells, e.g., immune spleen cells.

*2.2.0 Cell Banking*

One of the most important advantages of using serially subcultivated cells to produce biotechnological/biological products is the ability to have a characterized common starting source for each production lot, i.e., the preserved bank of cells. Manufacturers may prepare their own cell banks, or may obtain them from external sources. Manufacturers are responsible for ensuring the quality of each cell bank and of the testing performed on each bank.

*2.2.1 Cell Banking System*

The concept of a two-tiered cell bank, in which the MCB is used to generate Working Cell Banks (WCB's), is generally accepted as the most practical approach to providing a supply of cell substrate for continued manufacture of the product. Manufacturers should describe their strategy for providing a continued supply of cells from their cell bank(s), including the anticipated utilization rate of the cell bank(s) for production, the expected intervals between generation of new cell bank(s), and the criteria for qualification of cell bank(s).

Generally, an MCB is made first, usually directly from an initial clone or from a preliminary cell bank derived from an initial clone. It is not considered necessary to prepare cell banks from clones for certain types of cells (e.g., diploid cells, where limited in vitro life span or other technical factors make cell cloning impractical) or where the uncloned cell population is already adequately homogeneous for the intended use.

A WCB is derived from one or more containers of the MCB. It is the WCB which is typically used to directly provide cells for the manufacturing process. Additional WCB's are generated from the MCB as needed. A newly prepared WCB should be appropriately qualified by characterization and testing.

It should be noted that the MCB and WCB may differ from each other in certain respects, e.g., culture components and culture conditions. Similarly, the culture conditions used to prepare the MCB and WCB may differ from those used for the production process. If changes in cell culture process do not affect product quality, it is not considered necessary to reclone the cells or to rebank the MCB or WCB. It is important that a characterized bank provides a consistent product. A single-tiered banking system consisting only of a MCB but no WCB's could be used in principle, for example, if relatively few containers were needed each year to produce the desired product.

In some microbial expression systems, a new transformation is performed for each new cell substrate container lot, based upon using aliquots of thoroughly tested host cell banks and plasmid banks for each new transformation and on testing of each transformed cell substrate bank. This transformed cell substrate bank is considered an MCB, and it is used as the source of cell substrate for production. Host, plasmid, and MCB's are maintained by appropriate preservation methods. This alternative system is considered adequate because the transformation of bacteria and yeast is generally a very reproducible and easily performed process, unlike the events needed for transfection of metazoan cells. Manufacturers should provide information on the host cells, rDNA molecules (such as plasmids), method of transformation and of cell banking, and the results of characterization studies.

*2.2.2 Cell Banking Procedures*

It is important to prevent a contaminated cell substrate (or bank) from being used in production and to avoid a loss of product availability or development time resulting from the need to recreate a cell bank found to be unusable due to contamination. It is recognized that no cell bank testing regimen is able to detect all potential contaminants; therefore, use of these preventive principles during cell banking is important to provide reasonable assurance of the absence of contamination and to provide a reliable source of the cell substrate.

Manufacturers should describe the type of banking system used, the size of the cell bank(s), the container (vials, ampules, or other appropriate vessels) and closure system used, the methods used for preparation of the cell bank(s) including the cryoprotectants and media used, and the conditions employed for cryopreservation and storage.

Manufacturers should describe the procedures used to avoid microbial contamination and cross-contamination by other cell types present in the laboratory, and the procedures that allow and the cell bank containers to be traced. This should include a description of the labeling system which withstands the process of preservation, storage, and recovery from storage without loss of labeling information on the container.

Manufacturers should describe their cell banking procedures. Cells are generally prepared for banking by expanding cultures in a progressively greater number or larger size of vessel until a pool of cells can be obtained which is sufficient to generate enough containers for the bank. To ensure the uniform composition of the contents of each container, a single pool of cells for banking should be prepared by combining the cells from all of the culture vessels, if more than one vessel is used.

Cells suspended in preservation medium are aliquoted from the single pool into sterilized containers, which are then sealed and stored under appropriate conditions. For example, animal cells in media containing a cryoprotectant are frozen in the sealed containers under defined and controlled conditions, and then transferred to storage in the vapor or liquid phase of liquid nitrogen or at equivalent ultralow temperatures. Other methods of preservation and storage may be adequate depending on the organism used, but they should be capable of maintaining a level of cell viability upon reconstitution that is both consistent and adequate for production use.

To ensure continuous, uninterrupted production of pharmaceuticals, manufacturers should carefully consider the steps that can be taken to provide for protection from catastrophic events that could render the cell bank unusable. Examples of these events include fires, power outages, and human error. Manufacturers should describe their plans for such precautions; for example, these may include redundancy in the storage of bank containers in multiple freezers, use of back-up power, use of automatic liquid nitrogen fill systems for storage units, storage of a portion of the MCB and WCB at remote sites, or regeneration of the MCB.

The starting point of reference for estimates of in vitro cell age during manufacturing should be the establishment of the MCB. For diploid cell lines, in vitro lifespan should be estimated in terms of population doubling levels. The population doubling level at which senescence occurs should be determined for diploid cells.

*2.3.0 General Principles of Characterization and Testing of Cell Banks*

The characterization and testing of banked cell substrates is a critical component of the control of biotechnological and biological products. Characterization of the MCB allows the manufacturer to assess this source with regard to presence of cells from other lines, adventitious agents, endogenous agents and molecular contaminants (e.g., toxins or antibiotics from the host organism). The objective of this testing is to confirm the identity, purity, and suitability of the cell substrate for manufacturing use. In some cases, additional testing such as tumorigenicity or karyology may be useful. The testing program chosen for a given cell substrate will vary according to the biological properties of the cells (for example, growth requirements), its cultivation history (including use of human-derived and animal-derived biological reagents), and available testing procedures. The extent of characterization of a cell substrate may influence the type or level of routine testing needed at later stages of manufacturing. Manufacturers should perform tests for identity and purity once for each MCB, and tests of stability once as part of process validation for each product to be registered. In addition, tests of purity and limited tests of identity should be performed once on each WCB. Relevant tests among those described below should be performed and described in the marketing application, along with the results of the testing.

For cell lines containing exogenously assembled expression constructs, the relevant ICH guideline on rDNA expression constructs should be consulted for guidance on the characterization of nucleotide and amino acid sequences. It may also be useful to examine, by similar methods, the coding sequences in some nonrecombinant DNA-derived cell lines where the gene sequences have been characterized and are well understood. However, it is not considered necessary to carry out investigations of the sequences encoding complex natural products, for example, families of related gene products, microbial vaccine antigens, or monoclonal antibodies from hybridomas.

Manufacturers are also encouraged to employ ''state-of-the-art'' methods and technological improvements in cell substrate characterization and testing as they become available, as long as the specificity, sensitivity, and precision of the newer methods are at least equivalent to those of existing methods.

The manufacturer may choose to characterize the WCB instead of the MCB, if justified.

*2.3.1.0 Tests of Identity*

Appropriate tests should be performed to determine that the banked cell is what it is represented to be. Either phenotypic or genotypic characteristics may be used in identity testing. It is not considered

necessary to do all the possible tests. Tests of identity are generally performed on the MCB. In addition, limited identity testing is generally performed on each WCB.

*2.3.1.1 Metazoan Cells*

For human or animal cells that grow attached to a substratum, morphological analysis may be a useful tool in conjunction with other tests. In most cases, isoenzyme analysis is sufficient to confirm the species of origin for cell lines derived from human or animal sources; other tests may be appropriate depending on the history of the cell line. Other technologies may be substituted to confirm species of origin, including, for example, banding cytogenetics or use of species-specific antisera. An alternative strategy would be to demonstrate the presence of unique markers, for example, by using banding cytogenetics to detect a unique marker chromosome, or DNA analysis to detect a genomic polymorphism pattern (for example, restriction fragment length polymorphism, variable number of tandem repeats, or genomic dinucleotide repeats). Either confirmation of species of origin or presence of known unique cell line markers is considered an adequate test of identity. Expression of the desired product may represent a complementary approach to confirmation of identity.

*2.3.1.2 Microbial Cells*

For most microbial cells, analysis of growth on selective media is usually adequate to confirm host cell identity at the species level for the host cell bank and the transformed cell bank. For *E. coli*, where a variety of strains may be used, biological characterization methods such as phage typing should be considered as supplementary tests of identity. For plasmid banks, identity assessment can be accomplished as described by the ICH document on analysis of the expression construct. Expression of the desired product is also adequate to confirm the identity of the microbial expression system.

*2.3.2.0 Tests of Purity*

A critical aspect of cell development and banking is the assessment that the MCB and WCB are biologically pure, i.e., are free from adventitious microbial agents and adventitious cellular contaminants. The impact of selective agents and antibiotics on the detection of adventious microbial contaminants should be considered when planning and performing these tests.

*2.3.2.1 Metazoan Cells*

Tests for the presence of bioburden (bacteria and fungi) should be performed on individual containers (1 percent of the total number but not less than two containers) of the MCB and WCB. In all other aspects, any of the current methodologies described in the *European Pharmacopoeia* (EP), the *Japanese Pharmacopoeia* (JP), or the *U.S. Pharmacopeia* (U.S.P.) for testing microbial limits or microbial sterility are considered adequate.

Tests for the presence of both cultivatable and nonagar cultivatable mycoplasma should be performed on the MCB and WCB. Current procedures considered adequate include both the agar and broth media procedures as well as the indicator cell culture procedure. Suggested current methods for mycoplasma testing are described in either EP, JP, or ''Points to Consider in the Characterization of Cell Lines Used to Produce Biologicals'' (FDA, CBER, 1993). For nonmammalian animal cell lines, alternative controls and/or assay conditions may be appropriate. Manufacturers should consult with the national/regional regulatory authority for appropriate methodology. Testing cells derived from a single container is generally considered adequate. If future efforts to harmonize bioburden and mycoplasma assays are fruitful, then the scientifically appropriate harmonized assay should be used.

Virus testing of cell substrates should be designed to detect a wide spectrum of viruses by using appropriate screening tests and relevant specific tests, based on the cultivation history of the cell line, to detect possible contaminating viruses. Applicants should consult the ICH guideline on viral safety. For product classes not covered by the viral safety guideline, the current World Health Organization (WHO) documents for use of animal cells may be consulted.

The purity of cell substrates can be compromised through contamination by cell lines of the same or different species of origin. The choice of tests to be performed depends upon whether opportunities have existed for cross-contamination by other cell lines. In some cases, it may be necessary to maintain growing cultures of different cell lines in the same laboratory. During procedures in cell banking where open manipulations are performed, care should be taken to ensure that simultaneous open manipulations of other cell lines are avoided to prevent cross-contamination. Whenever another cell line is present in the cell banking room at the same time that open cell banking procedures are being performed (such as cell expansion, pooling, or aliquoting of the chosen cell line), the cell banks should be tested for the presence of cells from (or products derived from) the second cell line. In general, the methods described in section 2.3.1.0 to assess cell identity are also considered adequate tests to detect cross-contamination by other cell lines. Additional assurance of lack of cross-contamination is provided by successful preparation of the intended product from the cell substrate.

*2.3.2.2 Microbial Cells*

The design and performance of specific tests for adventitious microbial agents and adventitious cellular contaminants in microbial cell banks should take into account the properties of the banked cell, the likely contaminants based upon scientific literature, source, methods and materials used for cultivation, and other organisms present in the banking laboratory. For example, visual examination of the characteristics of well-isolated colonies is suggested, using several microbiological media, of which some do and some do not support growth of the cell substrate. However, it is not intended that manufacturers necessarily characterize resistant mutants of the cell substrate arising from such studies, or other artifacts of such assays. Rather, the purpose of such assays is to detect existing contaminants.

*2.3.3 Cell Substrate Stability*

Another dimension to cell characterization is appropriateness for intended use in production. There are two concerns for cell substrate stability: Consistent production of the intended product and retention of production capacity during storage under defined conditions.

For the evaluation of stability during cultivation for production, at least two time points should be examined, one using cells which have received a minimal number of subcultivations, and another using cells at or beyond the limit of in vitro cell age for production use described in the marketing application. The limit for in vitro cell age for production use should be based on data derived from production cells expanded under pilot plant scale or commercial scale conditions to the proposed limit of in vitro cell age for production use or beyond. Generally, the production cells are obtained by expansion of cells from the WCB; cells from the MCB could be used with appropriate justification. This demonstration of cell substrate stability need only be performed once for each product marketing application.

Evaluation of the cell substrate with respect to the consistent production of the intended product of interest should be the primary subject of concern. The type of testing and test article(s) used for such assessments will depend on the nature of the cell substrate, the cultivation methods, and the product. For cell lines containing recombinant DNA expression constructs, consistency of the coding sequence of the expression construct should be verified in cells cultivated to the in vitro cell age limit for production use or beyond by either nucleic acid testing or product analysis, as described in the relevant ICH guideline. For nonrecombinant cell lines in which the coding sequence for the desired product has already been analyzed at the MCB or WCB level, invariability of the protein coding sequence during production should be verified in the production cells cultivated to the proposed in vitro age limit for production use or beyond by either nucleic acid testing or analysis of the purified protein product.

Where the product cannot be analyzed as described above, other specific traits which may include, for example, morphological characteristics, growth characteristics, biochemical markers, immunological markers, productivity of the desired product, or other relevant genotypic or phenotypic markers may be useful for the assessment of cell substrate stability. In some cases, where direct comparison of the characteristics of the MCB with those of the production cells at the in vitro cell age limit is difficult or impossible, one may compare the characteristics of cells at the initial stages of cultivation or production to those of cells at the in vitro cell age limit for production use in order to assess cell stability during production. Indices such as, for example, oxygen or glucose consumption rates,

ammonia or lactate production rates may be useful for such testing. Increases in the defined limit for in vitro cell age for production use should be supported by data from cells that have been expanded to the proposed new in vitro cell age limit. For diploid cell lines, data should be presented that established the finite in vitro lifespan of the cells from the WCB under conditions representative of those employed for manufacturing use.

Evidence for banked cell stability under defined storage conditions will usually be generated during production of clinical trial material from the banked cells. Data from the determination of cell viability when the preserved cells are reconstituted for production of clinical trial supplies will verify that the revived cells have survived the preservation process. Data from the preparation of clinical materials will demonstrate that the revived cells can be used to prepare the desired product. Available data should be clearly documented in the application dossiers, plus a proposal for monitoring of banked cell stability should be provided. The proposed monitoring can be performed at the time that one or more containers of the cryopreserved bank is thawed for production use, when the product or production consistency is monitored in a relevant way, or when one or more containers of the cryopreserved MCB is thawed for preparation of a new WCB (and the new WCB is properly qualified), as appropriate. In the case when production does not take place for a long period of time, viability testing on the cell bank used as a source of the production substrate should be performed at an interval described in the marketing application. If the viability of the cell substrate is not significantly decreased, generally no further testing of the MCB or WCB is considered necessary.

*2.3.4 Tests for Karyology and Tumorigenicity*

Utilization of karyology and tumorigenicity testing for evaluating the safety of a diploid cell line or characterizing a new cell line may be useful depending on the cells, the nature of the product, and the manufacturing process. Extensive analysis to determine the relative abundance of aneuploid cells has not been found to be useful. Karyology need not be determined for rodent cell lines or new cell lines known to be nondiploid. However, cytogenetic analysis may be an adequate method to assess cell substrate identity or purity as described in sections 2.3.1.0 and 2.3.2.0. Repetition of tumorigenicity testing for cells with already documented evidence of tumorigenicity is not considered necessary.

For products that are highly purified and that contain no cells, karyology and tumorigenicity testing are generally not considered necessary, provided that appropriate limits for residual host cell DNA are met consistently either by process validation studies or by lot release testing.

In general, products for which the presence of live cells cannot be excluded or which have little downstream purification (for example, some conventional live virus vaccines) will need such characterization of the cell substrate. The utility of tumorigenicity testing and chromosomal analysis for new cell substrates for unpurified products should be evaluated on a case-by-case basis. Use of cell lines known to be tumorigenic or to possess abnormal karyology should be evaluated in terms of risk-benefit for each product application when the product contains cells or is not highly purified.

Products that are manufactured in genetically unmodified MRC–5 or WI–38 cells do not need characterization of these cell substrates by karyology or tumorigenicity since extensive characterization has already been performed and published for these cell lines. However, for each MRC–5 and WI–38 WCB generated, manufacturers should confirm, once, that the cells grown in the manner to be used in production are diploid and have the expected lifespan.

For new or previously uncharacterized diploid cell substrates, confirmation of diploid karyology should be presented and tumorigenic potential should be established, using cells from the MCB. Methods for karyological and tumorigenicity analyses may be found in the current WHO document on animal cells.

**3. Glossary**

*Cell bank*—A cell bank is a collection of appropriate containers, whose contents are of uniform composition, stored under defined conditions. Each container represents an aliquot of a single pool of cells.

*Cell line*—Type of cell population which originates by serial subculture of a primary cell population, which can be banked.

*Continuous cell line*—A cell line having an infinite capacity for growth. Often referred to as ''immortal'' and previously referred to as ''established.''

*Diploid cell line*—A cell line having a finite in vitro lifespan in which the chromosomes are paired (euploid) and are structurally identical with those of the species from which they were derived.

*Host cells*—See Parental cells.

*In vitro cell age*—Measure of time between thaw of the MCB vial(s) to harvest of the production vessel measured by elapsed chronological time, by population doubling level of the cells, or by passage level of the cells when subcultivated by a defined procedure for dilution of the culture.

*Metazoan*—Organism of multicellular animal nature.

*MCB (Master Cell Bank)*—An aliquot of a single pool of cells which generally has been prepared from the selected cell clone under defined conditions, dispensed into multiple containers, and stored under defined conditions. The MCB is used to derive all working cell banks. The testing performed on a new MCB (from a previous initial cell clone, MCB, or WCB) should be the same as for the MCB unless justified.

*Parental cells*—Cells to be manipulated to give rise to a cell substrate or an intermediate cell line. For microbial expression systems, it is typical to also describe the parental cells as the host cells. For hybridomas, it is typical to also describe the parental cells as the cells to be fused.

*WCB (Working Cell Bank)*—The Working Cell Bank is prepared from aliquots of a homogeneous suspension of cells obtained from culturing the MCB under defined culture conditions.

**Appendix 1: Primary Cell Substrates**

**Annex to Quality of Biotechnological/Biological Products: Derivation and Characterization of Cell Substrates Used for Production of Biotechnological/Biological Products**

**I. Introduction**

The principles contained in this document apply in general to biotechnological/biological products prepared from characterized banked cells. However, a number of biological products, in particular certain viral vaccines, are prepared using primary cells.

Because primary cell cultures are used within the first passage after establishment from the tissue of origin, it is not possible to carry out extensive characterization of the cells prior to their use as is done for banked cell substrates. In addition, biological products produced using primary cell substrates often do not undergo extensive processing (e.g., purification). Despite these differences, the approach taken to assure the suitability and safety of primary cell substrates for production of biologicals is analogous, in many respects, to that outlined in this document and in other guidelines.

This annex outlines cell substrate-related information that should be included in marketing applications for biological products prepared using primary cells. This information falls into three general categories: (1) Information concerning the source tissue (or organ) and other animal-derived raw materials used for the establishment of primary cell substrates, (2) information concerning the preparation of primary cell substrates, and (3) testing performed on primary cell substrates to ensure the safety of the product.

**II. Source Tissue and Other Raw Materials**

Information should be provided about the animals used as a source of tissue for the preparation of primary cell substrates. Tissue should be derived from healthy animals subjected to veterinary and laboratory monitoring to certify the absence of pathogenic agents. Whenever possible, donor animals should be obtained from closed, specific pathogen-free (when available) colonies or flocks. Animals used as tissue donors should not have been used previously for experimental studies. Animals should be adequately quarantined for an appropriate period of time prior to use for the preparation of cells. In some countries, animals may need to be quarantined in the country where the primary cells are prepared. Manufacturers should consult with national/regional authorities for specific requirements.

Information on materials and components used for the preparation of primary cell substrates should be provided, including the identity and source of all reagents of human or animal origin. A description of testing performed on components of animal origin to certify the absence of detectable contaminants and adventitious agents should be included.

**III. Preparation of Primary Cell Substrates**

Methods used for isolation of cells from tissue, establishment of primary cell cultures, and maintenance of cultures should be described.

**IV. Testing of Primary Cell Substrates**

Tests performed on primary cell substrates to qualify them for use in production should be described. As noted, the nature of primary cell substrates precludes extensive testing and characterization prior to use. Testing to demonstrate the absence of adventitious agents in these substrates is therefore conducted concurrently and may include: Observation of production or uninfected control cultures before, during, and beyond the period of production; inoculation of culture fluids from production and uninfected control cultures into various susceptible indicator cell cultures capable of detecting a wide range of relevant viruses, followed by examination for cytopathic changes and testing for the presence of hemadsorbing viruses; and other tests for specific agents (such as relevant retroviruses) as necessary. Additional information concerning specific viral tests may be found in the relevant national/regional/international guidelines.

Appropriate testing regimens and test methods for cells used in the production of specific products will vary depending on the donor species used as a source of tissue, adventitious agents potentially present, the nature of the product, its intended clinical use, aspects of the manufacturing process, and the extent of testing performed on the final product. Applicants should explain and justify the approach taken with respect to their specific product.

Dated: April 25, 1997.

**William K. Hubbard,**

*Associate Commissioner for Policy Coordination.*

[FR Doc. 97–11441 Filed 5–1–97; 8:45 am]

BILLING CODE 4160–01–F

federal register

Friday
May 2, 1997

# Part X

# Department of Health and Human Services

## Food and Drug Administration

## International Conference on Harmonisation; Draft Guideline on the Timing of Nonclinical Studies for the Conduct of Human Clinical Trials for Pharmaceuticals; Notice

## DEPARTMENT OF HEALTH AND HUMAN SERVICES

### Food and Drug Administration

**[Docket No. 97D–0147]**

### International Conference on Harmonisation; Draft Guideline on the Timing of Nonclinical Studies for the Conduct of Human Clinical Trials for Pharmaceuticals

**AGENCY:** Food and Drug Administration, HHS.

**ACTION:** Notice.

**SUMMARY:** The Food and Drug Administration (FDA) is publishing a draft guideline entitled ''Guideline for the Timing of Nonclinical Studies for the Conduct of Human Clinical Trials for Pharmaceuticals.'' The draft guideline was prepared under the auspices of the International Conference on Harmonisation of Technical Requirements for Registration of Pharmaceuticals for Human Use (ICH). The draft guideline is intended to recommend international standards for and to promote harmonization of the nonclinical safety studies needed to support human clinical trials of a given scope and duration.

**DATES:** Written comments by June 16, 1997.

**ADDRESSES:** Submit written comments on the draft guideline to the Dockets Management Branch (HFA–305), Food and Drug Administration, 12420 Parklawn Dr., rm. 1–23, Rockville, MD 20857. Copies of the draft guideline are available from the Drug Information Branch (HFD–210), Center for Drug Evaluation and Research, Food and Drug Administration, 5600 Fishers Lane, Rockville, MD 20857, 301–827–4573. Single copies of the draft guideline may be obtained by mail from the Office of Communication, Training and Manufacturers Assistance (HFM–40), Center for Biologics Evaluation and Research, 1401 Rockville Pike, Rockville, MD 20852–1448, or by calling the CBER Voice Information System at 1–800–835–4709 or 301–827–1800. Copies may be obtained from CBER's FAX Information System at 1–888–CBER–FAX or 301–827–3844.

**FOR FURTHER INFORMATION CONTACT:**

Regarding the guideline: Lisa D. Rarick, Center for Drug Evaluation and Research (HFD–580), Food and Drug Administration, 5600 Fishers Lane, Rockville, MD 20857, 301–827–4260.

Regarding the ICH: Janet J. Showalter, Office of Health Affairs (HFY–20), Food and Drug Administration, 5600 Fishers Lane, Rockville, MD 20857, 301–827–0864.

**SUPPLEMENTARY INFORMATION:** In recent years, many important initiatives have been undertaken by regulatory authorities and industry associations to promote international harmonization of regulatory requirements. FDA has participated in many meetings designed to enhance harmonization and is committed to seeking scientifically based harmonized technical procedures for pharmaceutical development. One of the goals of harmonization is to identify and then reduce differences in technical requirements for drug development among regulatory agencies.

ICH was organized to provide an opportunity for tripartite harmonization initiatives to be developed with input from both regulatory and industry representatives. FDA also seeks input from consumer representatives and others. ICH is concerned with harmonization of technical requirements for the registration of pharmaceutical products among three regions: The European Union, Japan, and the United States. The six ICH sponsors are the European Commission, the European Federation of Pharmaceutical Industries Associations, the Japanese Ministry of Health and Welfare, the Japanese Pharmaceutical Manufacturers Association, the Centers for Drug Evaluation and Research and Biologics Evaluation and Research, FDA, and the Pharmaceutical Research and Manufacturers of America. The ICH Secretariat, which coordinates the preparation of documentation, is provided by the International Federation of Pharmaceutical Manufacturers Associations (IFPMA).

The ICH Steering Committee includes representatives from each of the ICH sponsors and the IFPMA, as well as observers from the World Health Organization, the Canadian Health Protection Branch, and the European Free Trade Area.

At a meeting held on November 7, 1996, the ICH Steering Committee agreed that a draft guideline entitled ''Guideline for the Timing of Nonclinical Studies for the Conduct of Human Clinical Trials for Pharmaceuticals'' should be made available for public comment. The draft guideline is the product of the Multidisciplinary (Safety/Efficacy) Expert Working Group of the ICH. Comments about this draft will be considered by FDA and the Multidisciplinary (Safety/Efficacy) Expert Working Group.

The draft guideline is intended to recommend international standards for and to promote harmonization of the nonclinical safety studies needed to support human clinical trials of a given scope and duration. The nonclinical safety study requirements for the marketing approval of pharmaceuticals usually include single and repeat dose toxicity studies, reproductive toxicity studies, genotoxicity studies, local tolerance studies, an assessment of carcinogenic potential, safety pharmocology studies, and pharmacokinetic studies. The draft guideline discusses these types of studies, their duration, and their relation to the conduct of human clinical trials. The draft guideline should minimize delays in the conduct of clinical trials and reduce the unnecessary use of animals and other resources, which in turn should expedite the ethical development of drugs and facilitate the availability of new pharmaceuticals.

In publishing this draft guideline, a note from a prior draft (Note 4) has been deleted because it could have been read to suggest, incorrectly, that FDA lacks the authority to require the inclusion of certain populations in particular clinical trials. FDA has such authority under the Federal Food, Drug, and Cosmetic Act, 21 U.S.C. 301 *et seq.*, and the Public Health Service Act, 42 U.S.C. 201 *et seq*. The note was deleted because it was subject to misinterpretation and was unnecessary.

This guideline represents the agency's current thinking on the timing of nonclinical studies for the conduct of human clinical trials for pharmaceuticals. It does not create or confer any rights for or on any person and does not operate to bind FDA or the public. An alternative approach may be used if such approach satisfies the requirements of the applicable statute, regulations, or both.

Interested persons may, on or before June 16, 1997, submit to the Dockets Management Branch (address above) written comments on the draft guideline. Two copies of any comments are to be submitted, except that individuals may submit one copy. Comments are to be identified with the docket number found in brackets in the heading of this document. The draft guideline and received comments may be seen in the office above between 9 a.m. and 4 p.m., Monday through Friday. An electronic version of this guideline is available via Internet using the World Wide Web (WWW)(http://www.fda.gov/cder/guidance.htm). To connect to CBER's WWW site, type http://www.fda.gov/cber/cberftp.html.

The text of the draft guideline follows:

**Draft Guideline for the Timing of Nonclinical Studies for the Conduct of Human Clinical Trials for Pharmaceuticals**

## 1. Introduction

### *1.1 Objectives of the Guideline*

The purpose of this document is to recommend international standards for and to promote harmonization of the nonclinical safety studies needed to support human clinical trials of a given scope and duration.

Harmonization of the guidance for nonclinical safety studies will help to define the current recommendations and reduce the likelihood that substantial differences will exist between regions. This guidance should minimize delays in the conduct of clinical trials and reduce the unnecessary use of animals and other resources. This should expedite the ethical development of drugs and facilitate the availability of new pharmaceuticals.

### *1.2 Background*

The recommendations for the extent of nonclinical safety studies to support the various stages of clinical development differ among the regions of Europe, the United States, and Japan. This raises the important question of whether there is any scientific justification for these differences and whether it would be possible to develop a mutually acceptable guidance.

The present guideline represents the consensus that exists among the ICH regions regarding the scope and duration of nonclinical safety studies to support the conduct of human clinical trials for pharmaceuticals.

### *1.3 Scope of the Guideline*

The nonclinical safety study requirements for the marketing approval of a pharmaceutical agent usually include single and repeated dose toxicity studies, reproductive toxicity studies, genotoxicity studies, local tolerance studies, and for drugs which have cause for concern or are intended for a long duration of use, an assessment of carcinogenic potential. Other nonclinical studies include pharmacology studies for safety assessment (safety pharmacology) and pharmacokinetic (ADME) studies. These various types of studies, their duration, and the relation to the conduct of human clinical trials are presented in this guideline.

This guideline applies to the situations usually encountered during the development of conventional pharmaceutical agents and should be viewed as providing general guidance for drug development and not rigid requirements. The animal safety study and human clinical trial plans should be designed to represent that approach which is the most scientifically and ethically appropriate for the pharmaceutical agent under development.

There have been marked advances in the innovation of therapeutic agents (e.g., biotechnology-derived products) for which the existing paradigms for safety evaluation may not always be appropriate or relevant and they should therefore be evaluated on a case-by-case basis (Ref. 1). Similarly, pharmaceuticals in development for indications in life-threatening diseases or diseases without current effective therapy may also warrant a case-by-case approach to both the toxicological evaluation and clinical development to optimize or expedite drug development. In certain cases, studies may be abbreviated, deferred, or omitted.

### *1.4 General Principles*

The development of a pharmaceutical agent is a stepwise process involving an evaluation of both the animal and human safety information. The goals of the nonclinical safety evaluation include: A characterization of toxic effects with respect to target organs, dose dependence, relationship to exposure, and potential reversibility. This information is important for the estimation of an initial safe starting dose for the human trials and the identification of parameters for clinical monitoring for potential adverse effects. The nonclinical safety studies, although limited at the beginning of clinical development, should be adequate to characterize potential toxic effects.

Human clinical trials are conducted to demonstrate the safety and efficacy of a pharmaceutical, starting with a relatively low exposure in a small number of subjects. This is followed by clinical trials in which exposure usually increases by dose, duration and/or size of the exposed patient population. Clinical trials are extended based on the demonstration of adequate safety in the previous clinical trial(s) as well as additional nonclinical safety information that is available as the clinical trials proceed. Serious adverse clinical or nonclinical findings may influence the continuation of clinical trials and/or suggest the need for additional nonclinical studies and a reevaluation of previous clinical adverse events to resolve the issue.

Clinical trials are conducted in phases for which different terminology has been utilized in the various regions. This document uses the terminology as defined in the ICH guideline ''General Considerations for the Clinical Trials'' (Ref. 2). Clinical trials may be grouped by their purpose and objectives. The first human exposure studies are generally single dose studies, followed by dose escalation and short-term repeated dose studies to evaluate pharmacokinetic parameters and tolerance (Phase I studies—Human Pharmacology studies). These studies are often conducted in healthy volunteers but may also include patients. The next phase of trials consists of small scale studies for additional safety and clinical pharmacology as well as preliminary efficacy studies in patients (Phase II studies—Therapeutic Exploratory studies). This is followed by large scale clinical trials for safety and efficacy in patient populations (Phase III studies—Therapeutic Confirmatory studies).

## 2. Safety Pharmacology

Safety pharmacology includes the assessment of effects on vital functions (such as cardiovascular, central nervous, and respiratory systems) and these should be evaluated prior to human exposure. These evaluations may be conducted as additions to toxicity studies or as separate studies.

## 3. Toxicokinetic and Pharmacokinetic Studies

Exposure data in animals should be evaluated prior to human clinical trials (Ref. 3). Further information on absorption, distribution, metabolism, and excretion in animals should be made available to compare human and animal metabolic pathways. Appropriate information should usually be available by the time the early Phase I (Human Pharmacology) studies have been completed.

## 4. Single Dose Toxicity Studies

The single dose (acute) toxicity for a pharmaceutical should be evaluated in two mammalian species prior to the first human exposure (Note 1). A dose escalation study is an acceptable alternative to the single dose design.

## 5. Repeated Dose Toxicity Studies

The recommended duration of the repeated dose toxicity studies is related to the duration and scale of the proposed clinical trial. In principle, the duration of the animal toxicity studies conducted in two mammalian species (one nonrodent) should be equal to or exceed the duration of the human clinical trials (Table 1).

### *5.1 Phase I and II Studies*

A repeated dose toxicity study in two species (one nonrodent) for a minimum duration of 2–4 weeks (Table 1) would support Phase I (Human Pharmacology) and Phase II (Therapeutic Exploratory) studies up to 2 weeks in duration. Beyond this, 1-, 3-, or 6-month toxicity studies would support these types of human clinical trials for up to 1, 3, or 6 months, respectively.

TABLE 1.—DURATION OF REPEATED DOSE TOXICITY STUDIES TO SUPPORT PHASE I AND II TRIALS IN EU AND JAPAN AND PHASE I, II, AND III TRIALS IN THE UNITED STATES

| Duration of Clinical Trials[1] | Duration of Repeated Dose Toxicity Studies |
|---|---|
| Single Dose | 2–4 Weeks[2] |
| Up to 2 Weeks | 2–4 Weeks[2] |
| Up to 1 Month | 1 Month |
| Up to 3 Months | 3 Months |
| Up to 6 Months | 6 Months |

TABLE 1.—DURATION OF REPEATED DOSE TOXICITY STUDIES TO SUPPORT PHASE I AND II TRIALS IN EU AND JAPAN AND PHASE I, II, AND III TRIALS IN THE UNITED STATES—Continued

| Duration of Clinical Trials[1] | Duration of Repeated Dose Toxicity Studies |
|---|---|
| >6 Months | 6–12 Months[3] |

[1] In special circumstances, trials may be extended beyond the duration of completed repeat dose toxicity studies on a case-by-case basis.
[2] EU and United States: 2-week studies are the minimum duration. In Japan: 2-week nonrodent and 4-week rodent studies are needed (Also, see Note 2). In the United States, single dose toxicity studies with extended examinations can support single dose human studies (Ref. 4).
[3] In EU and Japan, 6-month studies are adequate. In the United States, a 12-month nonrodent study is usually needed (See Note 3).

*5.2 Phase III Studies*

For the Phase III (Therapeutic Confirmatory) studies, a 1-month toxicity study in two species (one nonrodent) would support clinical trials of up to 2 weeks in duration (Table 2). Three-month toxicity studies would support clinical trials for up to 1-month duration, while 6-month toxicity studies would support clinical trials for a longer duration.

TABLE 2.—DURATION OF REPEATED DOSE TOXICITY STUDIES TO SUPPORT PHASE III TRIALS IN THE EU AND JAPAN[1]

| Duration of Clinical Trials[2] | Duration of Repeated Dose Toxicity Studies |
|---|---|
| Up to 2 Weeks | 1 Month |
| Up to 1 Month | 3 Months |
| > 1 Month | 6 Months |

[1] The durations in this table also indicate the marketing requirements in the United States and EU. In addition, in the United States, for drugs used for duration in excess of 6 months, a 12-month nonrodent study is generally considered an important part of the safety evaluation for marketing.
[2] In special circumstances, trials may be extended beyond the duration of completed repeat dose toxicity studies on a case-by-case basis.

**6. Local Tolerance Studies**

Local tolerance should be studied in animals using a route which is relevant to the proposed clinical administration site. The evaluation of local tolerance should be performed prior to human exposure. The assessment of local tolerance may be part of other toxicity studies.

**7. Genotoxicity Studies**

Prior to first human exposure, in vitro tests for the evaluation of mutations and chromosomal damage are generally needed. If an equivocal or positive finding occurs, additional testing should be performed (Ref. 5).

The standard battery of tests for genotoxicity (Ref. 6) should be completed prior to the initiation of Phase II studies.

**8. Carcinogenicity Studies**

Completed carcinogenicity studies are not usually needed in advance of the conduct of clinical trials unless there is cause for concern. Conditions relevant for carcinogenicity testing are discussed in ICH document ''Guideline on the Need for Long-Term Rodent Carcinogenicity Studies of Pharmaceuticals'' (Ref. 7).

For pharmaceuticals developed to treat certain serious diseases, carcinogenicity testing, if needed, may be conducted postapproval.

**9. Reproductive Toxicity Studies**

Reproductive toxicity studies (Refs. 8 and 9) should be conducted as is appropriate for the population that is to be exposed.

*9.1 Men*

Men may be included in Phase I and II trials prior to the conduct of the male fertility study since an evaluation of the male reproductive organs is performed in the repeated dose toxicity studies (Note 2).

A male fertility study should be completed prior to the initiation of Phase III trials (Refs. 8 and 9).

*9.2 Women Not of Childbearing Potential*

Women not of childbearing potential (i.e., permanently sterilized, postmenopausal) may be included in clinical trials without reproductive toxicity studies provided the relevant repeated dose toxicity studies (which include an evaluation of the female reproductive organs) have been conducted.

*9.3 Women of Childbearing Potential*

For women of childbearing potential there is a high level of concern for the unintentional exposure of an embryo/fetus before information is available concerning the potential benefits versus potential risks. There are currently regional differences in the timing of reproductive toxicity studies to support the inclusion of women of childbearing potential in clinical trials.

In the EU and in Japan, assessment of female fertility and embryo-fetal development should be completed prior to the inclusion of women of childbearing potential using birth control in any type of clinical trial. The pre- and postnatal development study should be submitted for marketing approval.

In the United States, women of childbearing potential may be included in early, carefully monitored studies without reproductive toxicity studies provided appropriate precautions are taken to minimize risk. These precautions include pregnancy testing (for example, based on the b-subunit of HCG), use of a highly effective method of birth control (Note 5), and entry after a confirmed menstrual period. Continued testing and monitoring during the trial should be sufficient to ensure compliance with the measures not to become pregnant during the period of drug exposure (which may exceed the length of study). To support this approach, informed consent should include any known pertinent information related to reproductive toxicity, such as a general assessment of potential toxicity in pharmaceuticals with related structures or pharmacological effects. If no relevant information is available, the informed consent should clearly note the potential for risk.

In the United States, assessment of female fertility and embryo-fetal development should be completed before women of childbearing potential using birth control are enrolled in Phase III trials. Unless there is cause for concern, the pre- and postnatal development study should be submitted for marketing approval. For all regions, all female reproductive toxicity studies (Ref. 8) and the standard battery of genotoxicity tests (Ref. 6) should be completed prior to the inclusion, in any clinical trial, of women of childbearing potential not using highly effective birth control (Note 5) or whose pregnancy status is unknown.

*9.4 Pregnant Women*

Prior to the inclusion of pregnant women in clinical trials, all the reproductive toxicity studies (Refs. 8 and 9) and the standard battery of genotoxicity tests (Ref. 6) should be conducted. In addition, safety data from previous human exposure are generally needed.

**10. Supplementary Toxicity Studies**

Special toxicity studies may be needed if previous nonclinical or clinical findings with the study product or related product have indicated special toxicological concerns.

**11. Clinical Trials in Pediatric Populations**

When pediatric patients are included in clinical trials, safety data from previous adult human exposure would usually represent the most relevant safety data and should

generally be available before pediatric clinical trials (Note 6).

In addition to appropriate repeated dose toxicity studies, all reproductive toxicity studies (Ref. 8) and the standard battery of genotoxicity tests (Ref. 6) should be available prior to the initiation of trials in pediatric populations. Juvenile animal safety studies should be considered on an individual basis when previous animal data and human safety data are insufficient.

The need for carcinogenicity testing should be addressed prior to long-term exposure in pediatric clinical trials considering the length of treatment or cause for concern (Ref. 7).

**12. Continuing Efforts to Improve Harmonization**

It is recognized that significant advances in harmonization of the timing of nonclinical safety studies for the conduct of human clinical trials for pharmaceuticals have already been achieved and are detailed in this guideline. However, differences remain in a few areas. These include toxicity studies to support first entry into man, the recommendations for reproductive toxicity studies for women of childbearing potential, and the duration of nonclinical safety studies for trials and marketing of drugs intended for greater than 6 months clinical use. Regulators and industry will continue to consider these differences and work towards further improving the drug development process.

**13. Endnotes**

*Note 1* For the conduct of single dose toxicity studies, refer to the ICH–1 recommendations (Ref. 10) and the regional guidelines (e.g., Ref. 4).

*Note 2* There are currently regional differences for the minimum duration of repeated dose toxicity studies: 2 weeks in the EU and the United States, and 2-weeks nonrodent and 4-weeks rodent in Japan. In Japan, unlike the EU and the United States, the male fertility study is expected prior to the inclusion of men in clinical trials. As an alternative, an assessment of male fertility by careful histopathological examination in rodents can be made in the 4-week repeated dose toxicity study (Ref. 9) and thus fulfills this requirement for Japan. In the EU and the United States, 2-week repeated dose studies are considered adequate for an overall assessment of the potential toxicity of a drug to support clinical trials for a short duration.

*Note 3* In the United States, if the 12-month nonrodent study will not be completed before clinical trials exceed 6 months, the U.S. Food and Drug Administration should be consulted. The nature of the pharmaceutical being developed, the patient population being treated, and the available nonclinical toxicity information should be considered. If, for example, 6-month studies in two species (one rodent and one nonrodent) have been completed and there is no cause for concern for the safety of the subjects being studied, the 12-month nonrodent study should be ongoing such that it exceeds the duration of the clinical trial. This lead should be sufficient to allow application of the findings from the nonclinical study to influence monitoring and conduct of the clinical study if additional unexpected hazards are identified to ensure patient safety and efficient evaluation of potential clinical hazards.

*Note 4* Deleted.

*Note 5* A highly effective method of birth control is defined as one which results in a low failure rate when used consistently and correctly (i.e., less than 1 percent per year), such as implants, injectables, combined oral contraceptives, some IUD's, sexual abstinence, or vasectomized partner. For subjects using hormonal contraceptive method, information regarding the product under evaluation and its potential effect on the contraceptive should be addressed.

*Note 6* The necessity for adult human data would be determined on a case-by-case basis.

**14. References**

1. ICH Topic S6 Document ''Preclinical Testing of Biotechnology-Derived Pharmaceuticals.''

2. ICH Topic E8 Document ''General Considerations for Clinical Trials.''

3. ICH Harmonised Tripartite Guideline (S3A) Note for ''Toxicokinetics—Guidance on the Assessment of Systemic Exposure in Toxicity Studies.''

4. Food and Drug Administration, ''Single Dose Acute Toxicity Testing for Pharmaceuticals,'' Guidance for Industry, August 1996.

5. ICH Harmonised Tripartite Guideline (S2A) ''Guidance on Specific Aspects of Regulatory Genotoxicity Tests.''

6. ICH Topic S2B Document ''Standard Battery of Genotoxicity Tests.''

7. ICH Harmonised Tripartite Guideline (S1A) ''Guideline on the Need for Long-Term Rodent Carcinogenicity Studies of Pharmaceuticals.''

8. ICH Harmonised Tripartite Guideline (S5A) ''Detection of Toxicity to Reproduction for Medicinal Products.''

9. ICH Harmonised Tripartite Guideline (S5B) ''Toxicity to Male Fertility.''

10. Arcy, P. F., and D. W. G. Harron, ''Proceeding of The First International Conference on Harmonisation, Brussels 1991,'' Queen's University of Belfast, pp. 183–184, 1992.

Dated: April 25, 1997.

**William K. Hubbard,**

*Associate Commissioner for Policy Coordination.*

[FR Doc. 97–11496 Filed 5–1–97; 8:45 am]

BILLING CODE 4160–01–F

# Reader Aids

**Federal Register**

Vol. 62, No. 85

Friday, May 2, 1997

## CUSTOMER SERVICE AND INFORMATION

**Federal Register/Code of Federal Regulations**

General Information, indexes and other finding aids **202–523–5227**

**Laws**

For additional information **523–5227**

**Presidential Documents**

Executive orders and proclamations **523–5227**

**The United States Government Manual** **523–5227**

**Other Services**

Electronic and on-line services (voice) **523–4534**

Privacy Act Compilation **523–3187**

TDD for the hearing impaired **523–5229**

## ELECTRONIC BULLETIN BOARD

Free **Electronic Bulletin Board** service for Public Law numbers, Federal Register finding aids, and list of documents on public inspection. **202–275–0920**

## FAX-ON-DEMAND

You may access our Fax-On-Demand service. You only need a fax machine and there is no charge for the service except for long distance telephone charges the user may incur. The list of documents on public inspection and the daily Federal Register's table of contents are available using this service. The document numbers are 7050-Public Inspection list and 7051-Table of Contents list. The public inspection list will be updated immediately for documents filed on an emergency basis.

**NOTE:** YOU WILL ONLY GET A LISTING OF DOCUMENTS ON FILE AND NOT THE ACTUAL DOCUMENT. Documents on public inspection may be viewed and copied in our office located at 800 North Capitol Street, N.W., Suite 700. The Fax-On-Demand telephone number is: **301–713–6905**

## FEDERAL REGISTER PAGES AND DATES, MAY

23613–23938 ..... 1
23939–24324 ..... 2

## CFR PARTS AFFECTED DURING MAY

At the end of each month, the Office of the Federal Register publishes separately a List of CFR Sections Affected (LSA), which lists parts and sections affected by documents published since the revision date of each title.

**3 CFR**

**Administrative Orders:**

Presidential Determinations:

No. 97–21 of April 24, 1997 .....23939

**5 CFR**

3801.....23941

**7 CFR**

226.....23613
301.....23620, 23943
340.....23628, 23945
454.....23628
457.....23628
1755.....23958

**Proposed Rules:**

401.....23675
416.....23680
425.....23685
437.....23690
457 .....23675, 23680, 23685, 23690

**8 CFR**

292.....23634

**9 CFR**

92.....23635
304.....23639
308.....23639
310.....23639
327.....23639
381.....23639
416.....23639
417.....23639

**10 CFR**

**Proposed Rules:**

435.....24164

**14 CFR**

39 .....23640, 23642, 24009, 24013, 24014, 24015, 24017, 24019, 24021, 24022
71 .....23643, 23644, 23646, 23647, 34648, 23649, 23651, 23652, 23653, 23654, 23655, 23656, 24024
97.....24025
187.....24286

**Proposed Rules:**

11.....24288
21.....24288
25.....24288
39.....23695, 23697
71.....23699

**17 CFR**

1.....24026
15.....24026
16.....24026
17.....24026

**Proposed Rules:**

230.....24160
239.....24160
270.....24160, 24161
274.....24160

**26 CFR**

1.....23657

**28 CFR**

0.....23657
45.....23941

**29 CFR**

**Proposed Rules:**

4231.....23700

**30 CFR**

**Proposed Rules:**

251.....23705

**31 CFR**

351.....24280

**32 CFR**

706.....23658

**33 CFR**

165.....23659
334.....24034

**Proposed Rules:**

96.....23705

**38 CFR**

**Proposed Rules:**

3.....23724
17.....23731

**40 CFR**

52.....24035, 24036
81.....24036, 24038
180.....24040, 24045
244.....24051
372.....23834

**Proposed Rules:**

52.....24060
60.....24212
63.....24212
81.....24065
180.....24065
260.....24212
261.....24212
264.....24212
265.....24212
266.....24212
270.....24212
271.....24212

**44 CFR**

**Proposed Rules:**

62.....23736

**45 CFR**

1626.....24054, 24159

**46 CFR**

108.....23894
110.....23894
111.....23894
112.....23894
113.....23894
161.....23894

**Proposed Rules:**

2.....23705
31.....23705
71.....23705
91.....23705
107.....23705
115.....23705
126.....23705
175.....23705
176.....23705
189.....23705

**47 CFR**

0.....24054
73.....24055

**Proposed Rules:**

25.....24073

**48 CFR**

**Proposed Rules:**

32.....23740
52.....23740
252.....23741

**49 CFR**

1.....23661
8.....23661
10.....23666
107.....24055
190.....24055

**Proposed Rules:**

1121.....23742
1150.....23742

**50 CFR**

600.....23667
622.....23671
670.....24058
679.....24058

**Proposed Rules:**

600.....23744
648.....24073

## REMINDERS

The items in this list were editorially compiled as an aid to Federal Register users. Inclusion or exclusion from this list has no legal significance.

## RULES GOING INTO EFFECT MAY 2, 1997

**AGRICULTURE DEPARTMENT**

**Animal and Plant Health Inspection Service**

Plant-related quarantine, domestic:

Pink bollworm; published 5-2-97

**ENVIRONMENTAL PROTECTION AGENCY**

Pesticides; tolerances in food, animal feeds, and raw agricultural commodities:

Clomazone; published 5-2-97

Paraquat; published 5-2-97

Propiconazole; published 5-2-97

Superfund program:

National oil and hazardous substances contingency plan—

National priorities list update; published 4-25-97

**FEDERAL COMMUNICATIONS COMMISSION**

Organization, functions, and authority delegations:

Associate General Counsel; published 5-2-97

Radio stations; table of assignments:

Maryland; published 3-21-97

Michigan; published 5-2-97

**HEALTH AND HUMAN SERVICES DEPARTMENT**

**Food and Drug Administration**

Food for human consumption:

Food labeling—

Restaurant foods; nutrient content and health claims; published 8-2-96

Restaurant menus; nutrient content and health claims exemption removed; correction; published 12-23-96

**HOUSING AND URBAN DEVELOPMENT DEPARTMENT**

Environmental quality protection and enhancement; Federal regulatory reform; published 4-2-97

Fair housing:

Complaint processing; subpoena provision removed; published 4-2-97

**INTERIOR DEPARTMENT**

**Indian Affairs Bureau**

Law and order on Indian reservations:

Indian country law enforcement; published 4-2-97

**JUSTICE DEPARTMENT**

Conflict of interests; published 5-2-97

**TRANSPORTATION DEPARTMENT**

**Research and Special Programs Administration**

Hazardous materials transportation and pipeline safety:

Informal guidance and interpretive assistance; availability; published 5-2-97

## COMMENTS DUE NEXT WEEK

**AGRICULTURE DEPARTMENT**

**Agricultural Marketing Service**

Honey research, promotion, and consumer information order; comments due by 5-6-97; published 3-7-97

Milk marketing orders:

Eastern Colorado; comments due by 5-8-97; published 4-8-97

**AGRICULTURE DEPARTMENT**

**Animal and Plant Health Inspection Service**

Interstate transportation of animals and animal products (quarantine):

Brucellosis in cattle and bison—

State and area classifications; comments due by 5-5-97; published 3-6-97

Plant-related quarantine, domestic:

Asian longhorned beetle; comments due by 5-6-97; published 3-7-97

**AGRICULTURE DEPARTMENT**

**Federal Crop Insurance Corporation**

Crop insurance regulations:

Popcorn; comments due by 5-9-97; published 4-9-97

**AGRICULTURE DEPARTMENT**

**Rural Business-Cooperative Service**

Grants:

Rural venture capital demonstration program; comments due by 5-9-97; published 4-9-97

**AGRICULTURE DEPARTMENT**

**Rural Telephone Bank**

Loan policies:

Telecommunications loan program; policies, types, and requirements; comments due by 5-6-97; published 3-7-97

**AGRICULTURE DEPARTMENT**

**Rural Utilities Service**

Telephone loans:

Telecommunications loan program; policies, types, and requirements; comments due by 5-6-97; published 3-7-97

**COMMERCE DEPARTMENT**

**National Oceanic and Atmospheric Administration**

Fishery conservation and management:

Alaska; fisheries of Exclusive Economic Zone—

Aleutian Islands shortraker and rougheye rockfish; comments due by 5-6-97; published 4-25-97

Pacific cod; comments due by 5-5-97; published 4-18-97

Magnuson Act provisions and Northeastern United States fisheries—

Experimental fishing permit applications; comments due by 5-9-97; published 4-24-97

Northeastern United States fisheries—

Summer flounder, etc.; comments due by 5-8-97; published 4-8-97

West Coast States and Western Pacific fisheries—

Ocean salmon off coasts of Washington, Oregon, and California; comments due by 5-9-97; published 4-24-97

Pacific Coast groundfish; comments due by 5-5-97; published 3-21-97

**COMMODITY FUTURES TRADING COMMISSION**

Bankruptcy:

Chicago Board of Trade—London International Financial Futures and Options Exchange Trading Link; distribution of customer property related to trading; comments due by 5-7-97; published 4-22-97

**DEFENSE DEPARTMENT**

Acquisition regulations:

Earned value management systems; comments due by 5-5-97; published 3-5-97

**ENERGY DEPARTMENT**

**Energy Efficiency and Renewable Energy Office**

Consumer products; energy conservation program:

Certification requirements and test procedures—

Plumbing products and residential appliances; comments due by 5-6-97; published 2-20-97

Refrigerators and refrigerator-freezers, externally vented; test procedures; comments due by 5-8-97; published 4-8-97

**ENVIRONMENTAL PROTECTION AGENCY**

Air programs:

Locomotives and locomotive engines; emission standards; hearing; comments due by 5-8-97; published 4-16-97

Air quality implementation plans; approval and promulgation; various States:

Illinois; comments due by 5-8-97; published 4-8-97

Indiana; comments due by 5-5-97; published 4-3-97

Minnesota; comments due by 5-9-97; published 4-9-97

New Hampshire; comments due by 5-9-97; published 4-9-97

Utah; comments due by 5-9-97; published 4-9-97

Vermont; comments due by 5-9-97; published 4-9-97

Clean Air Act:

Federal operating permits program; Indian country policy; comments due by 5-5-97; published 3-21-97

State operating permits programs—

Arizona; comments due by 5-5-97; published 4-4-97

Hazardous waste:

Characteristic metal wastes; treatment standards (Phase IV); data availability; comments due by 5-8-97; published 4-8-97

**EQUAL EMPLOYMENT OPPORTUNITY COMMISSION**

Employment discrimination:

Age Discrimination in Employment Act—

Rights and claims waivers; comments due by 5-9-97; published 3-10-97

**FEDERAL COMMUNICATIONS COMMISSION**

Common carrier services:

Satellite communications—

Fixed-satellite, fixed, mobile, and government operations; spectrum allocation; comments due by 5-5-97; published 4-4-97

Radio services, special:

Amateur services—

Spread spectrum communication technologies; greater use; comments due by 5-5-97; published 3-19-97

Radio stations; table of assignments:

Indiana; comments due by 5-5-97; published 3-21-97

Texas; comments due by 5-5-97; published 3-25-97

Wisconsin; comments due by 5-5-97; published 3-21-97

**FEDERAL HOUSING FINANCE BOARD**

Federal home loan bank system:

Housing finance and community investment; mission achievement; comments due by 5-9-97; published 4-9-97

**FEDERAL TRADE COMMISSION**

Trade regulation rules:

Home entertainment products; power output claims for amplifiers; comments due by 5-7-97; published 4-7-97

**HEALTH AND HUMAN SERVICES DEPARTMENT**

**Food and Drug Administration**

Chlorofluorocarbon propellants in self-pressurized containers; current usage determined to be no longer essential; comments due by 5-5-97; published 3-6-97

Human drugs:

Current good manufacturing practice—

Dietary supplements and dietary supplment ingredients; comments due by 5-7-97; published 2-6-97

**HEALTH AND HUMAN SERVICES DEPARTMENT**

Indirect cost appeals; informal grant appeals procedure; CFR part removed; comments due by 5-5-97; published 3-5-97

**HOUSING AND URBAN DEVELOPMENT DEPARTMENT**

Public and Indian housing:

Rental voucher and certificate programs (Section 8)—

Leasing to relatives; restrictions; comments due by 5-9-97; published 3-10-97

**INTERIOR DEPARTMENT**

**Land Management Bureau**

Federal regulatory review:

Coal management; comments due by 5-9-97; published 4-9-97

Delegation of authority, cooperative agreements and contracts for oil and gas inspections; comments due by 5-9-97; published 4-9-97

**INTERIOR DEPARTMENT**

**Fish and Wildlife Service**

Endangered and threatened species:

Desert bighorn sheep; Peninsular Ranges population; comments due by 5-7-97; published 4-7-97

Endangered Species Convention:

Appendices and amendments; comments due by 5-9-97; published 4-17-97

**INTERIOR DEPARTMENT**

**Minerals Management Service**

Royalty management:

Reporting and paying royalties on gas standards and gas analysis report; comments due by 5-5-97; published 4-4-97

**INTERIOR DEPARTMENT**

**Surface Mining Reclamation and Enforcement Office**

Permanent program and abandoned mine land reclamation plan submissions:

Montana; comments due by 5-7-97; published 4-7-97

**JUSTICE DEPARTMENT**

**Immigration and Naturalization Service**

Nonimmigrant classes:

Nurses (H-1A category); extension of authorized period of stay in U.S.; processing procedures; comments due by 5-6-97; published 3-7-97

**JUSTICE DEPARTMENT**

**Prisons Bureau**

General management policy:

Searching and detaining or arresting persons other than inmates; comments due by 5-5-97; published 3-5-97

Inmate control, custody, care, etc.:

Progress reports; triennial preparation; comments due by 5-5-97; published 3-5-97

**NUCLEAR REGULATORY COMMISSION**

Plants and materials; physical protection:

Nuclear power plant security requirements; deletion of certain requirements associated with internal threat; comments due by 5-6-97; published 2-20-97

**PERSONNEL MANAGEMENT OFFICE**

Employment:

Reduction in force—

Initial retirement eligibility establishment and health benefits continuance; annual leave use; comments due by 5-9-97; published 3-10-97

**POSTAL SERVICE**

International Mail Manual:

Global package link (GPL) service—

Implementation; comments due by 5-9-97; published 4-9-97

**TRANSPORTATION DEPARTMENT**

**Coast Guard**

Drawbridge operations:

Louisiana; comments due by 5-5-97; published 4-4-97

Ports and waterways safety:

Port Everglades, FL; safety zone; comments due by 5-5-97; published 3-7-97

Regattas and marine parades:

Fort Myers Beach Offshore Grand Prix; comments due by 5-7-97; published 4-7-97

**TRANSPORTATION DEPARTMENT**

Economic regulations:

International passenger tariff-filing requirements; exemption; comments due by 5-9-97; published 3-10-97

**TRANSPORTATION DEPARTMENT**

**Federal Aviation Administration**

Airworthiness directives:

Airbus; comments due by 5-5-97; published 3-26-97

Airbus Industrie; comments due by 5-5-97; published 3-26-97

Boeing; comments due by 5-5-97; published 3-4-97

Dornier; comments due by 5-5-97; published 3-26-97

Gulfstream American (Frakes Aviation); comments due by 5-5-97; published 3-26-97

Lockheed; comments due by 5-5-97; published 3-26-97

Pilatus Britten-Norman Ltd.; comments due by 5-5-97; published 3-3-97

## LIST OF PUBLIC LAWS

This is a continuing list of public bills from the current session of Congress which have become Federal laws. It may be used in conjunction with ''P L U S'' (Public Laws Update Service) on 202–523–6641. This list is also available online at http://www.nara.gov/nara/fedreg/fedreg.html.

The text of laws is not published in the **Federal Register** but may be ordered in ''slip law'' (individual pamphlet) form from the Superintendent of Documents, U.S. Government Printing Office, Washington, DC 20402 (phone, 202–512–2470). The text will also be made available on the Internet from GPO Access at http://www.access.gpo.gov/su_docs/. Some laws may not yet be available.

**H.R. 1003/P.L. 105–12**

Assisted Suicide Funding Restriction Act of 1997 (Apr. 30, 1997; 111 Stat. 23)

**Last List April 29, 1997**

**FEDERAL REGISTER WORKSHOP**

## THE FEDERAL REGISTER: WHAT IT IS AND HOW TO USE IT

**FOR:** Any person who uses the Federal Register and Code of Federal Regulations.

**WHO:** Sponsored by the Office of the Federal Register.

**WHAT:** Free public briefings (approximately 3 hours) to present:

1. The regulatory process, with a focus on the Federal Register system and the public's role in the development of regulations.
2. The relationship between the Federal Register and Code of Federal Regulations.
3. The important elements of typical Federal Register documents.
4. An introduction to the finding aids of the FR/CFR system.

**WHY:** To provide the public with access to information necessary to research Federal agency regulations which directly affect them. There will be no discussion of specific agency regulations.

### WASHINGTON, DC

**WHEN:** May 13, 1997 at 9:00 am

**WHERE:** Office of the Federal Register
Conference Room
800 North Capitol Street, NW.
Washington, DC
(3 blocks north of Union Station Metro)

**RESERVATIONS:** 202–523–4538

### Long Beach, CA

**WHEN:** May 20, 1997 at 9:00 am to 12:00 noon

**WHERE:** Glenn M. Anderson Federal Building
501 W. Ocean Blvd.
Conference Room 3470
Long Beach, CA 90802

### San Francisco, CA

**WHEN:** May 21, 1997 at 9:00 am to 12:00 noon

**WHERE:** Phillip Burton Federal Building and Courthouse
450 Golden Gate Avenue
San Francisco, CA 94102

### Anchorage, AK

**WHEN:** May 23, 1997 at 9:00 am to 12:00 noon

**WHERE:** Federal Building and U.S. Courthouse
222 West 7th Avenue
Executive Dining Room (Inside Cafeteria)
Anchorage, AK 99513

**RESERVATIONS:** For Long Beach, San Francisco, and Anchorage workshops please call Federal Information Center
1-800-688-9889 x 0