ARCHITECTURAL AND TRANSPORTATION BARRIERS COMPLIANCE BOARD

36 CFR Part 1191

[Docket No. 92–2]

RIN 3014–AA12

Americans With Disabilities Act (ADA) Accessibility Guidelines for Buildings and Facilities; State and Local Government Facilities

AGENCY: Architectural and Transportation Barriers Compliance Board.

ACTION: Final rule.

SUMMARY: The Architectural and Transportation Barriers Compliance Board (Access Board) is issuing final guidelines to provide additional guidance to the Department of Justice and the Department of Transportation in establishing accessibility standards for new construction and alterations of State and local government facilities covered by title II of the Americans with Disabilities Act (ADA) of 1990. The guidelines will ensure that newly constructed and altered State and local government facilities are readily accessible to and usable by individuals with disabilities in terms of architecture, design, and communication. The standards established by the Department of Justice and the Department of Transportation must be consistent with the guidelines.

In addition to the provisions for State and local governments, the Access Board has also made some editorial changes to the Americans with Disabilities Act Accessibility Guidelines. These editorial changes are not substantive.

DATES: *Effective date:* April 13, 1998.

FOR FURTHER INFORMATION CONTACT: David Yanchulis, Office of Technical and Information Services, Architectural and Transportation Barriers Compliance Board, 1331 F Street NW., suite 1000, Washington, DC 20004–1111; telephone (202) 272–5434, ext. 27 or (800) 872–2253 ext. 27 (voice), and (202) 272–5449 (TTY) or (800) 993–2822 (TTY).

SUPPLEMENTARY INFORMATION:

Availability of Copies and Electronic Access

Single copies of this publication may be obtained at no cost by calling the Access Board's automated publications order line (202) 272–5434 or (800) 872–2253, by pressing 1 on the telephone keypad, then 1 again and requesting the State and Local Government Facilities Final Rule. Persons using a TTY should call (202) 272–5449 or (800) 993–2822. Please record a name, address, telephone number and request this publication. Persons who want a copy in an alternate format should specify the type of format (audio cassette tape, Braille, large print, or computer disk). This rule is available on electronic bulletin Board at (202) 272–5448. This rule is also available on the Board's Internet site (http://www.access-board.gov/rules/title2.htm).

Statutory Background

The Americans with Disabilities Act of 1990 (ADA) (42 U.S.C. 12101 et seq.) extends to individuals with disabilities comprehensive civil rights protections similar to those provided to persons on the basis of race, sex, national origin, and religion under the Civil Rights Act of 1964. Title II of the ADA, which became effective on January 26, 1992, prohibits discrimination on the basis of disability in services, programs and activities provided by State and local government entities, and the National Railroad Passenger Corporation (Amtrak). Section 202 of the ADA extends the nondiscrimination policy of section 504 of the Rehabilitation Act of 1973, as amended, (29 U.S.C. 794) which prohibits discrimination on the basis of disability in federally assisted programs and activities to all State and local governmental entities whether or not such entities receive Federal funds. Most programs and activities of State and local governments are recipients of financial assistance from one or more Federal agencies and are already covered by section 504 of the Rehabilitation Act of 1973.

Title III of the ADA, which also became effective on January 26, 1992, prohibits discrimination on the basis of disability by private entities who own, lease, lease to, or operate a place of public accommodation. Title III establishes accessibility requirements for new construction and alterations in places of public accommodation and commercial facilities.

Section 504 of the ADA requires that the Access Board issue minimum guidelines to assist the Department of Justice and the Department of Transportation in establishing accessibility standards under titles II and III. Under sections 204(a) and 306(b) of the ADA, the Department of Justice is responsible for issuing final regulations, consistent with the guidelines issued by the Access Board, to implement titles II and III (except for transportation vehicles and facilities). Sections 229 and 306(a) of the ADA provide that the Department of Transportation is responsible for issuing regulations to implement the transportation provisions of titles II and III of the ADA. Those regulations must also be consistent with the Access Board's guidelines.

Rulemaking History

On July 26, 1991, the Access Board published the Americans with Disabilities Act Accessibility Guidelines (ADAAG) to assist the Department of Justice in establishing accessibility standards for new construction and alterations in places of public accommodation and commercial facilities. See 56 FR 35408, as corrected at 56 FR 38174 (August 12, 1991) and 57 FR 1393 (January 14, 1992), 36 CFR part 1191. ADAAG contains scoping provisions and technical specifications generally applicable to buildings and facilities (sections 1 through 4) and additional requirements specifically applicable to certain types of buildings and facilities covered by title III of the ADA: restaurants and cafeterias (section 5); medical care facilities (section 6); mercantile and business facilities (section 7); libraries (section 8); and transient lodging (section 9).[1]

On July 26, 1991, the Department of Justice published its final regulations implementing title III of the ADA which incorporated ADAAG as the accessibility standards for newly constructed and altered places of public accommodation and commercial facilities covered by title III. See 56 FR 35544, 28 CFR part 36. On that same date, the Department of Justice published its final regulations implementing title II of the ADA. See 56 FR 35694, 28 CFR part 35. The Department of Justice's title II regulations give State and local governments the option of choosing between designing, constructing or altering their facilities in conformance with the Uniform Federal Accessibility Standards (UFAS)[2] (Appendix A to 41

[1] On September 6, 1991, the Access Board amended ADAAG to include additional requirements specifically applicable to transportation facilities (section 10). See 56 FR 45500, 36 CFR 1191.1. On that same date, the Access Board also published separate final guidelines to assist the Department of Transportation in establishing accessibility standards for transportation vehicles. See 56 FR 45530, 36 CFR part 1192. The Department of Transportation has incorporated ADAAG and the Access Board's guidelines for transportation vehicles and facilities in its final regulations. See 56 FR 45584 (September 6, 1991), 49 CFR parts 37 and 38.

[2] UFAS was developed by the General Services Administration, Department of Defense, Department of Housing and Urban Development, and the United States Postal Service to implement the Architectural Barriers Act of 1968 (42 U.S.C. 4151 *et seq.*) which requires certain federally financed buildings to be

CFR part 101–19, subpart 101–19.6) or with ADAAG (Appendix A to 28 CFR part 36), except that if ADAAG is chosen, the elevator exemption contained in title III of the ADA does not apply.[3] See 28 CFR 35.151.

When the Department of Justice published its title II regulations, it noted that the Access Board would be supplementing ADAAG in the future to include additional guidelines for State and local government facilities. The Department of Justice further stated that it anticipated that it would amend its title II regulations to adopt ADAAG as the accessibility standards for State and local government facilities after the Access Board supplemented ADAAG. 56 FR 35694, 35711 (July 26, 1991). Adopting essentially the same accessibility standards for titles II and III of the ADA will help ensure consistency and uniformity of design in the public and private sectors throughout the country.

Proposed Guidelines

On December 21, 1992, the Access Board published a notice of proposed rulemaking (NPRM) in the **Federal Register** which proposed to add four special application sections to ADAAG specifically applicable to certain types of buildings and facilities covered by title II of the ADA. Those special application sections include:

11. Judicial, Legislative, and Regulatory Facilities.
12. Detention and Correctional Facilities.
13. Accessible Residential Housing.
14. Public Rights-of-Way.

The NPRM also proposed requirements and asked questions regarding the addition of miscellaneous provisions specifically applicable to State and local government facilities, including swimming pools, text telephones (TTYs), automatic doors, airport security systems, entrances, elevator exemptions, building signage, assistive listening systems, and sales and service counters. 57 FR 60612 (December 21, 1992).

Following the publication of the NPRM, the Access Board held five public hearings in various locations between February 22, 1993 and March 15, 1993. A total of 148 people presented testimony on the proposed guidelines at the hearings. In addition, 447 written comments were submitted to the Access Board by the end of the comment period on March 22, 1993. Another 127 comments were received after March 22, 1993. Although those comments were not timely, the Access Board considered them to the extent practicable. In all, the Access Board received nearly 7,000 pages of comments and testimony on the proposed guidelines.

Interim Rule

On June 20, 1994, the Access Board published an interim rule (hereinafter referred to as the interim rule) in the **Federal Register** which added sections 11 through 14 and miscellaneous provisions to ADAAG. 59 FR 31676 (June 20, 1994) as corrected at 59 FR 32751 (June 24, 1994). Many of the comments received by the Access Board in response to the December 21, 1992 NPRM and the public hearings, as well as modifications made to the NPRM based on the comments, were discussed in the June 20, 1994 interim rule.

On that same date, the Department of Justice and the Department of Transportation published notices of proposed rulemakings to adopt as standards sections 11 through 14 and the miscellaneous provisions of the Access Board's interim rule. See 59 FR 31808; June 20, 1994, Department of Justice; 59 FR 31818; June 20, 1994, Department of Transportation. Both the Access Board's interim rule and the notices of proposed rulemaking published by the Departments of Justice and Transportation sought comment on sections 11 through 14 and the miscellaneous provisions, as published in the **Federal Register** on June 20, 1994.

Final Rule

As discussed above, the Access Board's guidelines provide guidance to the departments of Justice and Transportation in establishing accessibility standards for new construction and alterations of State and local government facilities covered by title II of the ADA. The standards ultimately established by those departments must be consistent with and may incorporate the guidelines. It is important to note that until such time as the Department of Justice or the Department of Transportation adopt these guidelines as standards, the guidelines are advisory only and are not to be construed as requirements.

In finalizing the guidelines, the Access Board has considered all comments previously received in response to the Access Board's NPRM for State and local government facilities published on December 21, 1992, as well as comments received in response to the Access Board's interim rule and the Departments of Justice and Transportation's notices of proposed rulemaking.

The Access Board and the departments received comments and testimony from a broad range of interested individuals and groups, including individuals who identified themselves as having a disability; organizations representing persons with disabilities; State or local code administrators; State, local and Federal government agencies; manufacturers; design professionals; and national professional and trade associations. In all, the Access Board and the Departments of Justice and Transportation received 246 comments totaling over 1,200 pages on the interim rule.

The comments and testimony were sorted by section and analyzed. A large number of commenters expressed support for the guidelines. Some comments requested changes and others requested clarifications. Due to the large number of comments received, it is not possible for the Access Board to respond to each comment in this preamble. Many of the comments received in response to the initial NPRM were discussed in the interim rule. A copy of that interim rule is available upon request. (See: **FOR INFORMATION CONTACT**, above.) The Access Board has made every effort to respond to significant comments in the general issues and section-by-section analysis. As discussed under general issues and in ADAAG 13 (Accessible Residential Housing) and 14 (Public Rights-of-Way), the Access Board has reserved action in some areas pending further analysis.

Editorial Amendments

Under section 502 of the Rehabilitation Act of 1973 (29 U.S.C. 792), the Access Board is responsible for establishing guidelines for accessibility standards issued by other Federal agencies pursuant to the Architectural Barriers Act of 1968 (42 U.S.C. 4151 *et seq.*). To further the goal of uniform standards, the Access Board intends to use ADAAG as the basis for accessibility guidelines for federally financed facilities covered by the Architectural Barriers Act of 1968 since the Federal government owns or operates many of the same types of facilities as State and local governments which are addressed

accessible. Most Federal agencies reference UFAS as the accessibility standard for buildings and facilities constructed or altered by recipients of Federal financial assistance for purposes of section 504 of the Rehabilitation Act of 1973, as amended.

[3] In new construction and alterations, title III of the ADA does not require elevators if a facility is less than three stories or has less than 3,000 square feet per story, unless the facility is a shopping center or mall; a professional office of a health care provider; or a terminal, depot or other station used for specified public transportation or an airport passenger terminal. See 28 CFR 36.401(d) and 36.404.

in this final rule. In the near future, the Access Board anticipates revising its current guidelines for federally financed facilities to be more consistent with ADAAG. As a result, the Access Board has made a number of editorial revisions to accommodate the use of ADAAG as the basis for revising the guidelines covering Federal facilities.

The editorial changes made to facilitate the application of the provisions of ADAAG to Federal facilities in future rulemaking and any other clarifying editorial changes are addressed in the section-by-section analysis that follows. None of the editorial changes made in this final rule are substantive and therefore do not require the issuance of an additional proposed rule.

General Issues

Unisex Toilet and Bathing Facilities

The Access Board received a number of comments concerning the need for unisex toilet and bathing facilities to accommodate people with personal attendants of the opposite sex. In the interim rule, the Access Board noted that it would examine appropriate means of addressing this issue. In May 1994, the Access Board held an informational workshop to discuss the issue of scoping requirements for unisex toilet and bathing facilities. Subsequently, at the Access Board's request, the Board for the Coordination of Model Codes (BCMC) developed scoping provisions for unisex toilet and bathing facilities. BCMC recommended single-user toilet and bathing facilities in assembly and mercantile occupancies where an aggregate of six or more fixtures (e.g., toilets for either men or women) are provided. Assembly occupancies include, but are not limited to, theaters, museums, nightclubs, stadiums, amusement parks, restaurants, health clubs and transportation facilities. Mercantile occupancies include public accommodations for display and sales purposes, such as stores and shopping malls. The BCMC report has been incorporated, with minor modification, into the Uniform Building Code (UBC), the Standard Building Code (SBC) and the National Building Code (BOCA). The Access Board will continue to participate in the advancement of the recommendations of the BCMC report. The Access Board anticipates that the provisions concerning unisex toilet and bathing facilities will be included in the International Building Code as it is developed for publication in the year 2000.

Swimming Pools

The interim rule contained a requirement that at least one means of access be provided into swimming pools covered by title II if the pool was intended for recreational purposes and not intended solely for diving or wading. Technical specifications for pool access were not provided. This requirement has been removed in the final rule.

Comment. While many commenters supported a requirement for pool access, concern was also expressed over the absence of any technical guidance on meeting the requirement. Commenters noted that the ADAAG specifications for ramps in 4.8.5 require handrails which, if applied to swimming pool access, may pose a hazard below the water level to swimmers and that devices, such as sling-type lifts, were not independently operable. Commenters varied greatly on what means of access into swimming pools should be required. The suitability of the available design solutions depended on the needs and preferences of individual users. It was recommended that any requirement for pool access include technical specifications to prevent confusion and for safety reasons. Commenters also considered pool access equally important for facilities covered by title III of the ADA.

Response. The Access Board established a Recreation Access Advisory Committee to provide recommendations for the development of accessibility guidelines for swimming pools, other recreational facilities, and outdoor developed areas. This advisory committee identified important considerations in providing access into swimming pools that merit further study. As a result, the Access Board sponsored research on these issues to obtain information necessary for the development of possible future technical specifications. The requirement for access into pools has been removed. The Access Board will consider the results of the study, as well as the advisory committee's recommendations, when it conducts a separate rulemaking in the future to address recreational facilities. These future guidelines will apply to entities covered by both titles II and III of the ADA.

Other Issues

Several comments addressed other issues raised in the NPRM and discussed in the interim rule, such as assembly areas, and voting booths. Many of these comments supported rulemaking in these areas. While the Access Board may address these issues in future rulemaking, it is not prepared to do so as part of this final rule.

Section-by-Section Analysis

This section of the preamble contains a summary of the significant comments received on the interim rule, and the departments of Justice and Transportation's NPRMs, the Access Board's response to those comments, and any changes made to the guidelines.

1. Purpose

In section 1 (Purpose) and throughout ADAAG, the reference to sections 4.1 through 4.35 has been deleted and replaced with a general reference to section 4. Additionally, the reference to ''guidelines'' has been replaced with ''scoping and technical requirements''. These are editorial amendments and are not substantive changes. No other changes have been made to this section.

3. Miscellaneous Instructions and Definitions

3.5 Definitions

Alteration. The definition for ''alteration'' in the interim rule included references to pedestrian facilities in the public right-of-way. This language has been removed. For further discussion, see ADAAG 14 below.

The interim rule also added a specific reference to ''resurfacing'' in the definition for ''alterations''. The addition of the term ''resurfacing'' was not intended as a new interpretation of what constitutes an alteration, but rather to reinforce the original intent that the resurfacing of streets, sidewalks, parking lots, and other outdoor surfaces is considered an alteration. The term ''resurfacing'' has been retained in the final rule, however, the application of the term has been clarified.

Comment. A few commenters were concerned that the inclusion of the term ''resurfacing'' would broaden the scope of compliance to minor street repair.

Response. The term ''resurfacing'' does not include minor repair work to parking lots and paved surfaces, such as repainting existing striping or repair of potholes. By definition, ''alteration'' excludes normal maintenance that does not affect the usability of a facility. Repairing potholes would be an example of normal maintenance. Other relatively minor tasks, such as restriping of a parking lot, may constitute alterations because they affect the usability of the facility by creating an opportunity to increase accessibility. However, the obligation triggered by such an alteration is limited by the scope of the planned alteration. In the

case of restriping, the obligation would be to make the altered element itself (e.g., the striping) conform to the provisions of these guidelines.

Assembly Area. ADAAG provides requirements for wheelchair seating and assistive listening systems in certain ''assembly areas.'' See ADAAG 4.1.3(19). These requirements are intended to apply to judicial, legislative, and regulatory facilities which are addressed in section 11. ''Assembly Area'' is defined, in part, as ''a room or space accommodating a group of individuals for recreation, educational, political, social or amusement purposes.'' For clarity, a reference to ''civic'' purposes has been added.

Continuous Passage. The definition for ''continuous passage'' in the interim rule referenced ADAAG 14 (Public Rights-of-Way). This definition has been removed. For further discussion, see ADAAG 14 below.

Curb Ramp. The definition for ''curb ramp'' in the interim rule included a reference to ADAAG 14 (Public Rights-of-Way). This language has been removed. For further discussion, see ADAAG 14 below.

Dwelling Unit. The definition for ''dwelling unit'' in the interim rule included a reference to ADAAG 13 (Accessible Residential Housing). This language has been removed. For further discussion, see ADAAG 13 below.

Private Facility and Public Facility. The final rule includes definitions for ''private facility'' and for ''public facility.'' ''Private facility'' is defined as a public accommodation or a commercial facility subject to title III of the ADA and the Department of Justice implementing regulation (28 CFR part 36) or a transportation facility subject to title III of the ADA and the Department of Transportation's ADA regulation covering facilities constructed or altered by private entities (49 CFR 37.45). ''Public facility'' is defined as those facilities or portions thereof that are constructed by, on behalf of, or for the use of a public entity subject to title II of the ADA and the Department of Justice implementing regulation (28 CFR part 35) or a transportation facility subject to title II of the ADA and the Department of Transportation's regulations implementing the ADA as it applies to facilities constructed or altered by public entities (49 CFR 37.41 and 49 CFR 37.43). These terms are included in the final rule to distinguish certain requirements in the rule that apply only to facilities subject to title II or to facilities subject to title III, but not both. The terms replace references to ''places of public accommodation and commercial facilities'' and to references in the interim final rule to ''facilities subject to title II of the ADA.''

Public Rights-of-Way. The definition for ''public rights-of-way'' in the interim rule referenced ADAAG 14 (Public Rights-of-Way). This definition has been removed. For further discussion, see ADAAG 14 below.

Public Sidewalk. The definition for ''public sidewalk'' in the interim rule referenced ADAAG 14 (Public Rights-of-Way). This definition has been removed. For further discussion, see ADAAG 14 below.

Public Sidewalk Curb Ramp. The definition for ''public sidewalk curb ramp'' in the interim rule referenced ADAAG 14 (Public Rights-of-Way). This definition has been removed. For further discussion, see ADAAG 14 below.

Site Infeasibility. The definition for ''site infeasibility'' in the interim rule referenced ADAAG 14 (Public Rights-of-Way). This definition has been removed. For further discussion, see ADAAG 14 below.

TTY, TDD, and Text Telephone. The interim rule included editorial revisions concerning the use of the terms ''text telephone'' and ''TTY''. Both terms are synonymous and refer to devices that make telephones accessible to people who are deaf or hard of hearing or who have speech impairments via typed messages through the standard telephone network. The interim rule replaced the term ''text telephone'' with ''TTY'' in this section and throughout ADAAG. The final rule amends ADAAG 3.5 (Definitions), 4.1.3(17), 4.30.7, and 4.31.9 to include a reference to both ''text telephone'' and ''TTY'' for clarity. In addition, ''TDD,'' another synonymous term which is used on the international symbol for these devices and in other regulations, has been added to ADAAG 3.5 (Definitions).

Comment. Organizations representing people who are deaf or hard of hearing preferred the original use of the term text telephone as it is more descriptive than abbreviated terms such as TTY. Other commenters recommended that both text telephone and TTY be used in ADAAG as the abbreviation TTY is more commonly used.

Response. The definition of TTY in the interim rule has been amended to reference the definition of text telephone. A reference to TTYs has been added to the definition of text telephone. ADAAG has been modified to include both text telephone and TTY when referencing devices that make telephones accessible to people who are deaf or hard of hearing or who have speech impairments.

Technically Infeasible. This term and a reference to its definition in alterations (4.1.6(1)(j)) was added in the interim rule for clarification. No substantive comments were received and no changes have been made to this definition.

Transient Lodging. The interim rule modified the definition of ''transient lodging'' to clarify that a transient lodging facility is not considered a residential facility. An appendix note was added referencing the Department of Justice's policy and rules regarding transient lodging. No substantive comments were received regarding this definition or the appendix note and no changes have been made to this provision or the appendix note.

4. Accessible Elements and Spaces: Scope and Technical Requirements

4.1 Minimum Requirement

4.1.1 Application. 4.1.1(1) General. 4.1.1(2) Application Based on Building Use. ADAAG 4.1.1(1) (General) and 4.1.1(2) (Application Based on Building Use) were editorially revised in the interim rule for clarity. Few comments were received regarding these sections and no substantive changes have been made in the final rule.

4.1.1(5) General Exceptions. As revised in the interim rule, ADAAG 4.1.1(5)(b) exempts from the requirements for accessibility, prison guard towers, fire towers, fixed life guard towers, and other areas raised for purposes of security or life or fire safety; non-occupiable spaces accessed only by tunnels and frequented only by personnel for maintenance or occasional monitoring of equipment; and single occupant structures accessed only by passageways above or below grade. A reference to ''lookout galleries'' has been added to the final rule for clarification. No substantive changes have been made to this provision in the final rule.

Comment. One disability group opposed the exceptions for fire towers and prison guard towers. Both the Eastern Paralyzed Veterans Association (EPVA) and the Paralyzed Veterans of America opposed exceptions for toll booths. These commenters pointed to the employment opportunities available to persons with disabilities at such facilities. In addition, EPVA provided information regarding a newly built facility where elevator access has been provided to toll booths accessed from tunnels below. One commenter expressed support for the exception for non-occupiable spaces.

Response. Originally, ADAAG 4.1.1(5)(b) provided that accessibility was not required to ''(i) observation galleries which were used primarily for security purposes; or (ii) non-occupiable

spaces which were accessed only by ladders, catwalks, crawl spaces, very narrow passageways, or freight (non-passenger) elevators, and frequented only by service personnel for repair purposes'' (e.g., elevator pits, elevator penthouses, piping or equipment catwalks). The interim rule amended the language of 4.1.1(5)(b)(i) by providing that accessibility was not required to ''raised areas used primarily for purposes of security or life or fire safety'' (e.g., observation galleries, prison guard towers, fire towers or fixed life guard stands). Section 4.1.1(5)(b)(ii), as amended in this final rule, includes a reference to areas ''frequented only by service personnel for maintenance, repairs, or occasional monitoring of equipment'' in lieu of areas ''frequented only by service personnel for repair purposes''. The interim rule provided several examples of such areas, including water or sewage treatment pump rooms and stations, electric substations and transformer vaults, and highway and tunnel utility facilities. The final amendment to this provision includes the addition of a third paragraph referencing single occupant structures accessed only by passageways below grade or elevated above grade, including, but not limited to, toll booths that are required to be accessed from underground tunnels. This provision was not intended to exempt structures accessed by passageways merely elevated by a curb and has been clarified in the final rule as applying to single occupant structures that are accessed by passageways elevated above standard curb height.

The additions made to 4.1.1(5)(b) in the interim rule were not intended to broaden the basis of exempt areas, but to address structures specific to the public sector that are similar to those areas which were exempt under the earlier version of this provision because of design constraints. The examples specifically referenced in the interim rule as exempt areas, such as prison guard, fire, and fixed life guard towers are subject to design constraints which are similar to, if not greater than, those relevant to observation galleries raised for security purposes. Since these facilities are typically for limited use and not open to the public, the Access Board sought to provide accessibility requirements for State and local government facilities consistent with the level of access required for the private sector.

With respect to toll booths, elevator or lift access may provide access to booths accessed from tunnels below or passageways above. However, providing elevators or lifts in full compliance with ADAAG will significantly impact the design and cost of such structures. The exception applies only to toll booths accessed from below or above grade, not to those that can be accessed at grade.

Comment. A correctional entity recommended that prison boot camps, national guard facilities, and firing ranges be exempt since such facilities are typically not intended to serve persons with disabilities.

Response. As discussed in the interim rule, the Access Board has not provided any exceptions based on the presumed physical abilities of the occupants of the facilities. Instead, exceptions in 4.1.1(5)(b) are based primarily on the structural and cost impacts of access to certain limited use structures.

Comment. One commenter recommended an exemption for elevated control rooms such as those found in correctional facilities.

Response. Such facilities, depending on their design and use, may be exempt under the exception for ''raised areas used primarily for purposes of security.''

4.1.3(5) Elevators. The interim rule added several exceptions to the requirement for elevator access for State and local government facilities.

Exception 1(a) of ADAAG 4.1.3(5) contains an exception based on the number of stories or square footage per floor specific to private facilities, which are defined in 3.5 as those facilities subject to title III of the ADA.

Exception 1(b) of ADAAG 4.1.3(5) provides that elevators are not required in drawbridge towers and boat traffic towers, lock and dam control stations, train dispatching towers and similar structures subject to title II of the ADA as a public facility that are less than three stories and not open to the public, where the story above or below the accessible ground floor houses no more than five persons and is less than 500 square feet. This provision has been editorially revised for clarity.

Comment. One commenter opposed this exception because it may deny persons with disabilities certain job opportunities. Another commenter recommended that the language of the exception, including the reference to ''similar structures,'' be more specific.

Response. Exception 1(b) is based on the design and cost impact of providing elevator access in small limited use structures and applies only to those facilities that are less than three stories, are not open to the public, and where the story above or below the accessible ground floor has a maximum occupancy of five and is less than 500 square feet. Each of these conditions must be met for the exemption to apply. Specific facilities such as drawbridge and boat traffic towers, lock and dam control stations, and train dispatching towers are referenced to illustrate the type of structures the exception may cover.

Exception 4 (Platform Lifts). The interim rule also recognized additional situations in which a platform lift can be used to provide vertical access. Exception 4(e) to ADAAG 4.1.3 permits lift access to judges' benches, clerks' stations, raised speakers' platforms, jury boxes and witness stands. It is possible that some designs may include areas that are lower than the floor of a courtroom, such as the well of the court, instead of raised spaces such as jury boxes. For clarity and consistency, a reference has been added to ''depressed areas'' in addition to the raised spaces originally listed. Exception 4(f) which applied specifically to dwelling units has been deleted in the final rule. For further discussion regarding the application of accessibility requirements for dwelling units, see ADAAG 13 (Accessible Residential Housing) below.

Exception 5 (Air Traffic Control Towers). Exception 5 exempts air traffic control towers from the requirement that an elevator serve each level of a facility. Under this exception, elevator access is not required to the cab or to the floor immediately below the cab since an elevator serving such levels would obstruct the 360-degree clear view necessary in an air traffic control tower. No changes have been made to this provision in the final rule.

Comment. A few comments opposed the exception for air traffic control towers since possible design alternatives currently under review, (e.g., the use of glass observation elevators), may provide feasible solutions to the problem of providing an unobstructed 360-degree clear view.

Response. As discussed in the interim rule, the exception for air traffic control towers is based on the impact of providing vertical access to the cab level. While solutions for this access may exist, their impact on design is significant according to information from the Federal Aviation Administration. It is for these reasons that an exception for vertical access to the cab and the level immediately below the cab has been provided.

4.1.3(8) Entrances. ADAAG 4.1.3(8)(a) requires that, at a minimum, 50 percent of all public entrances be accessible. It also requires accessible entrances to be provided in a number at least equivalent to the number of exits required by the applicable building or fire code. However, this is required only to the extent that the number of entrances planned for a facility is equal to or

greater than the number of exits required; if the number of exits exceeds the number of planned entrances, all planned entrances are required to be accessible. Additional entrances are not required. Paragraph (a) also states that, ''where feasible, accessible entrances shall be those used by the majority of the people visiting or working in the building.'' The interim rule added an additional requirement that facilities subject to title II of the ADA must include all ''principal public entrances'' when meeting this requirement. These entrances were defined as those entrances designed and constructed to accommodate a substantial flow of pedestrian traffic to a major function in a facility subject to title II. Appendix material provided examples to clarify the application of this requirement. This requirement, definition, and appendix note for principal public entrances has been removed in the final rule. Since ADAAG requires access to entrances used by the majority of visitors or employees where feasible, the Board considered the requirement for principal public entrances in the interim final rule as a possible source of confusion. Further, the Board is concerned that designers might have difficulty determining which entrances constituted a ''principal public entrance.'' In addition, editorial revisions have been made to this section for clarity and consistency.

ADAAG 12 (Detention and Correctional Facilities) requires that public entrances, including entrances that are secured, shall be accessible as required by 4.1.3(8). This requirement does not increase the number of entrances required to be accessible by 4.1.3(8) and provides an exception from certain ADAAG specifications for doors and doorways. This exception applies to doors or doorways operated only by security personnel or where security requirements prohibit full compliance with the guidelines. See ADAAG 12.2.1. A cross reference to this section has been added to 4.1.3(8)(a) in the final rule.

ADAAG 4.1.3(8)(b) requires that, where provided, one direct entrance to an enclosed parking garage and one entrance to a pedestrian tunnel or elevated walkway must be accessible in addition to those entrances required to be accessible by 4.1.3(8)(a). ADAAG 11 contains additional requirements for access to restricted and secured entrances in judicial, legislative, and regulatory facilities. A cross reference to these requirements has been added to 4.1.3(8)(b) in the final rule.

4.1.3(17)(c) Text Telephones (TTYs). ADAAG 4.1.3(17)(c)(i) provides that if an interior public pay telephone is provided in a public use area of a building that is part of a public facility, then at least one interior public text telephone (TTY) shall be provided in the building in a public use area. This requirement, which was located at 4.1.3(17)(c)(iv) in the interim rule, has been revised to cover ''buildings'' instead of ''facilities'' for clarity. The existing requirement for a public text telephone where four or more public pay telephones are provided on a site and at least one is in an interior location has been clarified as applying to private facilities subject to title III of the ADA.

ADAAG 4.1.3(17)(c)(ii) requires that in public facilities that are stadiums, arenas and convention centers, at least one public text telephone (TTY) shall be provided on each floor level having a public pay telephone. ADAAG 4.1.3(17)(c)(iv) requires that if an interior public pay telephone is provided in a secured area of a detention or correctional facility, then at least one public text telephone (TTY) shall be provided in at least one secured area. ADAAG 4.1.3(17)(d) provides that, where a bank of telephones in the interior of a building consists of three or more public pay telephones, at least one public pay telephone in each such bank shall be equipped with a shelf and outlet in compliance with ADAAG 4.31.9(2). This provision contains an exception for the secured areas of detention or correctional facilities where outlets are prohibited for purposes of security or safety. No substantive changes have been made to these sections.

Comment. Several commenters supported this provision. Other commenters supported an increase in the number of text telephones (TTYs) required and offered various recommendations. The American Public Communications Council, a trade association comprised of suppliers of public pay telephones and other services, was concerned that the requirement could have the unintended result of decreasing the number of public pay telephones available to all members of the public. They stated that the business of providing public pay telephones operates on a very thin margin and the increased investment cost of an additional $1000 or more may mean that neither independent public pay telephone providers nor local exchange carriers will be able or willing to provide a public pay telephone in a low-traffic facility. The commenter submitted documentation detailing a few instances where telephone companies have removed public pay telephones because the pay telephones were deemed not to be profitable.

Response. It is the covered entity that has the responsibility to ensure that the public pay telephone service is accessible to persons with disabilities and to select from the various options available on how to provide that service. In developing the interim rule, the Access Board considered the options currently available. The cost for text telephones (TTYs) generally ranges from $230 to $300 for portable devices and $700 to $1200 for those permanently installed. In addition, text telephones (TTYs) may be leased for approximately $30 a month under programs that include long-term maintenance and technology upgrade services. ADAAG 4.31.9(3) includes a provision for equivalent facilitation which permits the use of portable devices, in lieu of permanently installed public text telephones (TTYs), if the portable device is equally available during the same hours as the public pay telephone. This provision ensures equal access, and allows the entity greater flexibility in selecting a secure and cost effective method of providing access. For example, an administrative office in a town hall may provide a portable text telephone (TTY) for use in the office or at public telephones as long as the office is open to the public the same hours that the public telephone is available for use by the public. Directional signage must be provided at the public pay telephones indicating the location of the text telephone (TTY).

Comment. One commenter requested clarification of the term ''public use area''.

Response. ADAAG 3.5 (Definitions) defines ''public use'' as the interior or exterior rooms or spaces that are made available to the general public. Some entities covered under title II of the ADA may not have a public use area.

4.1.6 Accessible Buildings: Alterations. 4.1.6(1)(k) Elevator Exception. This provision states that the exception to the requirement for an elevator in ADAAG 4.1.3(5) for newly constructed facilities also applies to altered facilities. This exception was editorially revised in the interim rule consistent with the revision of ADAAG 4.1.3(5). No changes have been made to this provision in the final rule.

4.1.7 Accessible Buildings: Historic Preservation. 4.1.7(1)(a) Exception. This section addresses the requirements for access in alterations to qualified historic facilities. The interim rule contained an exception referencing provisions for program access in the Department of Justice's title II and III regulations where compliance with

ADAAG would threaten or destroy the historic significance of a facility. See 28 CFR 35.151(d)(2) and 28 CFR 36.405(b). This provision has been relocated to the appendix as it did not function as an ''exception'' to ADAAG but as an advisory note.

4.33 Assembly Areas

4.33.7 Types of Listening Systems. Information was submitted which addressed the incompatibility of some receivers with hearing aids. People who wear hearing aids often need them while using an assistive listening system. A requirement for hearing-aid compatibility was not included in the proposed or interim final rules. The Access Board intends to consider this issue in future rulemaking which would address assembly areas in general. However, the Department of Justice's regulations implementing titles II and III of the ADA require public entities and public accommodations to provide appropriate auxiliary aids and services where necessary to ensure effective communication. Where assistive listening systems are used to provide effective communication, the Department of Justice considers it essential that a portion of receivers be compatible with hearing aids. This information has been added to an appendix note to section 4.33.7.

Special Occupancy Sections: 5. Restaurants and Cafeterias through 10. Transportation Facilities. General provisions in each of these sections have been editorially revised to refer to ''section 4'' of ADAAG instead of section ''4.1. to 4.35'' to facilitate future revision of the guidelines.

7. Business, Mercantile and Civic

This section addresses business, mercantile, and civic occupancies. In the final rule, a reference to ''civic'' has been added to clarify the applicability of this section to state and local government facilities.

7.2 Sales and Service Counters, Teller Windows, Information Counters.

ADAAG 7.2(1) and (2) require access at sales and service counters, teller windows, and information counters in State and local government facilities where goods and services are available to the public. Both provisions are existing requirements which have been editorially revised to include their application to State and local government facilities as well. Section 7.2(3) of the interim rule contained the requirements for State and local governments. These requirements are no longer necessary with the editorial revisions to 7.2(1) and (2). ADAAG 7.2(3) requires access to facilitate voice communication at counters and teller windows with solid partitions or security glazing provided in public facilities. This provision also requires that, where provided, telecommunication devices shall be equipped with volume controls complying with ADAAG 4.31.5. In the final rule, this requirement has been editorially revised and has been clarified as applying to the telecommunication devices provided on the public side of counters or teller windows.

Comment. Several commenters supported this section, while several other commenters recommended modifications. For example, one commenter recommended that knee and toe clearances be specified beneath counters. Another commenter recommended that information display screens at counters should be mounted at 43 to 51 inches from the floor.

Response. Since the counters addressed by this section are typically used for brief periods of time in the conduct of business transactions, knee and toe clearance underneath counters is not required as it is for fixed seating and tables covered by ADAAG 4.32. Requirements for the mounting heights for equipment have not been included in the absence of supporting technical data.

10. Transportation Facilities

10.4 Airports

10.4.1 New Construction. 10.4.1(8) Security Systems. This provision requires an accessible route complying with ADAAG 4.3 to be provided at each single security barrier or group of security barriers in airports covered by title II of the ADA as public facilities.

Comment. One commenter was concerned that the exemption for doors, doorways and gates to be operated only by security personnel would limit job opportunities for persons with disabilities.

Response. This provision applies to security gates at airport security checkpoints. Such gates are designed to prevent air carrier passengers from entering secured areas until they have been cleared. Normally, such gates are adjacent to unobstructed routes allowing exiting passengers to leave the secured area. Airport employees are typically allowed free access through such routes and, therefore, employees with disabilities would not need to use the security gate. A reference in this exception to ADAAG 4.13.6, which specifies maneuvering clearances at doors, including latch-side clearance, has been removed. This reference had been included in the interim rule for doors operated by security personnel since such operation precludes the need for clearance at the latch side of doors. However, since ADAAG 4.13.6 also contains specifications for maneuvering space, which is essential for passage through doors, including those operated by security personnel, it has been applied to these doors and gates. A reference to ''path of travel'' in this exception has been changed to ''circulation path'' to avoid confusion with the use of the term ''path of travel'' as it relates to alterations to primary function areas in ADAAG 4.1.6(2).

11. Judicial, Legislative and Regulatory Facilities

This section addresses those facilities where judicial, legislative, and regulatory functions occur. Judicial facilities consist of courthouses. Legislative facilities include town halls, city council chambers, city or county commissioners' meeting rooms, and State capitols. Regulatory facilities are those which house State and local entities whose functions include regulating, governing, or licensing activities. For example, this section would address those rooms where school Board meetings, housing authority meetings, zoning appeals, and adjudicatory hearings (e.g., drivers license suspensions) are held.

Comment. Two commenters requested clarification of section 11 as it applies to legislative and regulatory facilities. The commenters felt that section 11 is so courtroom specific that it was difficult to extrapolate the applicable requirements of seating for legislators, Board, council and commission members.

Response. Section 11 has been reorganized to clarify the application of requirements to judicial facilities (11.2) and to legislative and regulatory facilities (11.3). Provisions applicable to all facilities covered by section 11 have been relocated to 11.1. An appendix note to 11.3 provides examples of legislative and regulatory facilities to further clarify the application of this section.

11.1 General

11.1.1 Entrances. This provision requires that, where provided, at least one restricted and at least one secured entrance be accessible. Restricted entrances differ from public entrances in that they are used only by judges, public officials, facility personnel and other authorized parties, such as jurors on a controlled basis. Secured entrances are used only by detainees and detention officers. The interim rule exempted secured entrances operated only by security personnel from ADAAG 4.13.6. However, since ADAAG 4.13.6 also contains specifications for maneuvering space, which is essential for passage through doors, including those operated by security personnel, the exemption from 4.13.6 has been removed. The requirements in ADAAG 4.13 are not known to pose any conflict with security requirements for doors. References in the interim rule to accessible routes have been removed as section 4 of ADAAG requires that accessible entrances be connected to an accessible route. Similarly, a requirement in the interim rule for passenger loading zones provided for detainees has been removed as accessible passenger loading zones are addressed in 4.1.2(5).

11.1.2 Security Systems. This provision requires an accessible route complying with ADAAG 4.3 (Accessible Route) to be provided through fixed security barriers at required accessible entrances. Where security barriers incorporate equipment such as metal detectors, fluoroscopes, or other similar devices which cannot be made accessible, an accessible route is required adjacent to such security screening devices to facilitate an equivalent circulation path. This provision has been editorially revised to reference a circulation path in lieu of a path of travel. No substantive changes have been made to this provision.

11.1.3 Two-way Communication Systems. This provision requires that where a two-way communication system is provided to gain admittance to a facility or to restricted areas within the facility, the system shall provide both visual and audible signals and shall comply with 4.27 (Controls and Operating Mechanisms). No changes have been made to this provision.

11.2 Judicial Facilities

11.2.1 Courtrooms. ADAAG 11.2.1 applies to courtrooms in judicial facilities and requires access to spectator seating and press areas, jury boxes, witness stands, judges' benches, and other courtroom stations. Areas that are raised, such as witness stands, or depressed and accessed by ramps or platform lifts with entry ramps must provide a turning space complying with 4.2.3 so that the space can be entered and exited in a forward direction safely. A reference to ''depressed areas'' has been added to raised spaces and elements consistent with the provision allowing use of platform lifts in 4.1.3(5), Exception 4. Requirements in the interim rule for accessible routes, doors and gates, clear floor space, and controls and operating mechanisms have been removed from the final rule as they are addressed in ADAAG section 4.

Comment. Several commenters stated that a turning space is not necessarily required within witness stands accessed by platform lifts. Commenters provided examples of customized designs that incorporate lifts which serve as the floor of the witness stand. This should obviate the necessity for an entry ramp into the lift since the surface of the lift is level with the adjacent floor.

Response. The requirement for unobstructed turning space has been revised to apply only to raised or depressed areas accessed by ramps or platform lifts with entry ramps. Enclosures and gates cannot restrict required maneuvering spaces.

Comment. One commenter questioned whether doors to jury boxes must be automatically operable.

Response. Where provided, doors and gates must comply with ADAAG 4.13 (Doors) which does not require automated doors, but does contain other technical requirements.

Comment. In the interim rule, sections 11.2.1(2) (Jury Boxes and Witness Stands), 11.2.1(4) (Fixed Judges' Benches, and Clerks' Stations), 11.2.1(5) (Fixed Bailiffs' Stations, Court Reporters' Stations, Litigants' and Counsel Stations), and 11.2.1(6) (Fixed Lecterns) required that the maximum height of controls and operating mechanisms be 48 inches. One commenter questioned why control and operating mechanisms were restricted to a maximum height of 48 inches when ADAAG allows up to 54 inches where a side approach is provided.

Response. The interim rule provided that the maximum height for controls and operating mechanisms was 48 inches. This limitation has been removed in the final rule to allow a 54 inch side reach.

Comment. The interim final rule contained a requirement for access to fixed lecterns which required knee space at least 27 inches high, 30 inches wide, and 19 inches deep. Several commenters considered this requirement excessive in view of standard lectern dimensions. Information was received indicating that lecterns are typically not fixed in judicial facilities.

Response. This requirement has been removed in the final rule.

11.2.1(1)(a) Spectator, Press and Other Areas with Fixed Seats. This provision specifies the number of wheelchair spaces required where spectator, press, or other areas with fixed seats are provided according to ADAAG 4.1.3(19)(a). This requirement has been clarified in the final rule as applying to each type of area with fixed seats.

Comment. The interim rule required that where spectator seating capacity exceeds 50 and is located on one level that is not sloped or tiered, accessible spaces must be provided in more than one seating row. One commenter considered this requirement excessive and inconsistent with current ADAAG requirements in 4.1.3(19)(a).

Response. This requirement has been removed in the final rule.

11.2.1(1)(b) Jury Boxes and Witness Stands. This provision requires at least one accessible wheelchair space within jury boxes and witness stands. An exception allows that, in alterations, a wheelchair space may be located outside the jury boxes or witness stands where providing ramp or lift access poses a hazard by restricting or projecting into a means of egress required by the appropriate local authority. A requirement in the interim rule requiring counters in witness stands to comply with ADAAG 4.32 has been removed since this provision which may be excessive for counters provided in witness stands.

Comment. The interim rule recognized the use of portable lifts in alterations where provision of a permanent platform lift is technically infeasible. One commenter requested clarification regarding securement of portable lifts. Concern was raised that portable lifts are subject to tipping if they are not secured to the floor. Concern was also expressed over a potential hazard where a ramp or platform lift would project into the circulation paths in the well of a courtroom.

Response. The reference to portable lifts has been removed in the final rule as it is not clear that all portable lifts meet the safety standard referenced in ADAAG 4.11.2. This modification does not preclude the use of portable platform lifts provided they fully comply with ADAAG 4.11.2. In addition, the exception to this provision has been modified to allow placement of a wheelchair accessible space outside

raised witness stands and jury boxes in alterations where a ramp or platform lift poses a hazard by restricting or projecting into necessary circulation paths. The reference to technical infeasibility has been removed as that exception is already provided in ADAAG 4.1.6(j).

11.2.1(1)(c) Judges' Benches and Courtroom Stations. This provision requires that judges' benches, clerks' stations, bailiffs' stations, deputy clerks' stations, court reporters' stations, and litigants' and counsel stations comply with ADAAG 4.32 (Fixed or Built-in Seating and Tables). An exception permits designs that allow later installation of a means of vertical access without substantial reconstruction of the space. This exception has been clarified in the final rule.

Comment. A few commenters recommended that only a percentage of raised judges' benches and clerks' stations be adaptable or accessible.

Response. Due to the complexity of courtroom design and the difficulty of accommodating subsequent alterations, the Access Board believes that requiring either accessible or adaptable judges' benches and clerks' stations will significantly facilitate a reasonable accommodation for an employee in the future.

11.2.1(2) Assistive Listening Systems. This section requires each courtroom in a judicial facility to have a permanently installed assistive listening system complying with 4.33. This provision specifies the minimum number of receivers for assistive listening systems. This number must be equal or greater than four percent of the room occupant load, but in no case less than two. This requirement is consistent with ADAAG requirements for assembly areas in 4.1.3(19).

Comment. The interim rule provided that a permanently installed assistive listening system was required in only 50 percent of certain areas in judicial, legislative and regulatory facilities. Several commenters recommended a requirement for 100 percent permanently installed assistive listening systems in State and local government facilities. These commenters cited operational problems such as scheduling and the inability of staff to locate and set up portable systems. Other commenters preferred portable systems because they believe them to be more flexible, cost effective and easier to replace as technology evolves. Two commenters requested that smaller hearing rooms be allowed to provide portable systems. The commenters stated that the majority of hearing rooms are not utilized exclusively for adjudicatory proceedings but for other purposes a disproportionate percentage of the time.

Response. The Access Board has revised the final rule to require a permanently installed assistive listening system in each courtroom. A requirement in the interim rule requiring permanently installed assistive listening systems in 50 percent of hearing rooms, jury deliberation rooms, and jury orientation rooms has been removed as these areas are addressed in ADAAG 4.1.3(19)(b). The definition of ''assembly area'' in ADAAG 3.5 has been clarified as applying to those rooms or spaces accommodating a group of individuals for ''civic'' purposes.

Comment. Information was submitted which addressed the incompatibility of some receivers with hearing aids. People who wear hearing aids often need them while using an assistive listening system. Ear buds require removal of hearing aids. Headsets that cover the ear can produce disruptive interference due to hearing aid T-coils. It was recommended that neckloops and headsets that can be worn as neckloops be specified over other receiver types since they are compatible with hearing aids.

Response. The compatibility of hearing aids and assistive listening receivers is an issue that pertains not only to facilities covered in section 11 but to other assembly areas as well. The Access Board intends to consider this issue in future rulemaking which would address assembly areas in general. An appendix note has been added to the final rule recommending receivers that are compatible with hearing aids.

Section 11.8 of the interim rule required electrical outlets and appropriate wiring, conduit, or raceways in various areas, including courtrooms, to support communication equipment for persons with disabilities. This requirement has been removed as it may be too vague for purposes of design without further specification on the type of equipment to be supported. Such equipment often is portable and not appropriately addressed by ADAAG.

11.2.2 Jury Assembly Areas and Jury Deliberation Areas. This provision requires that where provided, refreshment areas and drinking fountains in jury assembly areas and jury deliberation rooms must be accessible. References in the interim rule to fixed seating and tables and vending machines have been removed as ADAAG sections 4.1.3(18) and 5.8 address access to these elements. In addition, the requirement for access to drinking fountains for people who may have difficulty bending or stooping has been removed. The final rule requires that where drinking fountains are provided, at least one comply with ADAAG 4.15.

11.2.3 Courthouse Holding Facilities. Section 11.2.3(1) applies a scoping requirement to courthouse holding facilities including central holding cells and court-floor holding cells serving courtrooms. Where provided, at least one adult male, juvenile male, adult female, and juvenile female central holding cell must comply with the requirements in this section. Central holding facilities are typically designed with sight and sound separation between men, women and juveniles. Where such cell separation is provided, the guidelines require at least one of each type of cell to be accessible. While there may be additional ''types'' of cells (i.e., isolation, group or individual cells) the definition of ''type'' is limited to adult male, juvenile male, adult female, and juvenile female holding facilities. Court-floor holding cells, however, are not necessarily designed with sight and sound separation between adult males, juvenile males, adult females, and juvenile females. For example, some courthouses have numerous courtrooms with two court-floor holding cells provided between every two courtrooms. Detainees are escorted through a secured route directly from the central holding cell to the court-floor holding cell. In such instances, this provision would require only one accessible court-floor holding cell. Such a cell may serve more than one courtroom. A clarification has been added that cells may serve more than one courtroom. No other changes have been made to this provision.

Section 11.2.3(2) contains the minimum requirements for accessible cells. In the interim rule, 11.2.3(2)(a) (Doors and Doorways) exempted doors and doorways operated only by security personnel from ADAAG 4.13.6. However, since ADAAG 4.13.6 also contains specifications for maneuvering space, which is essential for passage through doors, including those operated by security personnel, the exemption from 4.13.6 has been removed. The requirements in ADAAG 4.13 are not known to pose any conflict with security requirements for doors. This provision has also been modified to require fixed benches to provide back support (e.g., attachment to the wall).

Comment. One commenter requested that the term ''maximum extent feasible'' be applied to situations where altering the facility would require substantial demolition of the existing

components of the facility in order to come into compliance.

Response. If compliance with alterations requirements is technically infeasible, ADAAG 4.1.6(1)(j) requires that the alteration provide accessibility to the maximum extent feasible. Technically infeasible means, with respect to an alteration of a building or a facility, that it has little likelihood of being accomplished because existing structural conditions would require removing or altering a load-bearing member which is an essential part of the structural frame; or because other existing physical or site constraints prohibit modification or addition of elements, spaces, or features which are in full and strict compliance with the minimum requirements for new construction and which are necessary to provide accessibility. Any elements or features of the building or facility that are being altered and can be made accessible are required to be made accessible within the scope of the alteration.

Comment. Several combination stainless steel water closet and lavatory units are available that cannot incorporate a 36 inch grab bar behind the water closet. One manufacturer of combination fixtures stated that the two main reasons such units are specified is to reduce costs and minimize vandalism. Combination units reduce the square footage needed in cell design and reduce costs by only requiring one wall opening for plumbing connections, rather than two wall openings if separate fixtures are provided. The commenter further stated that there is a reduction in vandalism by having one large fixture mounted to the wall which makes it much more difficult to remove or destroy than a single lavatory or toilet. The commenter stated that major retooling and redesign of the units would defeat the reasons why the units are currently preferred and proposed that a 24 inch grab bar behind the water closet be allowed instead of a 36 inch grab bar.

Response. Although the use of combination units are preferred for space efficiency and security, they are generally not mandatory. An exception for the length of the rear grab bar on combination units has not been provided since separate, accessible lavatories and toilets are readily available.

Section 11.2.3(3) requires that where fixed cubicles are provided, at least five percent, but not less than one, must have the maximum counter height and knee clearance underneath as required by ADAAG 4.32 (Fixed or Built-in Seating or Tables) on both the public and detainee sides. It also requires a method to facilitate voice communication if solid partitions or security glazing separates visitors from detainees. No changes have been made to this provision.

11.3 Legislative and Regulatory Facilities

This section contains requirements for legislative and regulatory facilities. Legislative facilities include town halls, city council chambers, city or county commissioners' meeting rooms, and State capitols. Regulatory facilities are those which house State and local entities whose functions include regulating, governing, or licensing activities. This section has been clarified in the final rule as applying to public meeting rooms, hearing rooms, and chambers. An appendix note provides examples of the facilities and spaces covered by this section.

Section 11.3.1 requires access to raised speakers' platforms, spectator seating and press areas. Areas that are raised such as speakers' platforms, or depressed and accessed by ramps or platform lifts with entry ramps must provide a turning space complying with 4.2.3 so that the space can be entered and exited in a forward direction safely. For clarity, those requirements in the interim rule applicable to hearing rooms and chambers are provided in this section separately from those in 11.2 for courtrooms.

Section 11.3.1(1) requires access to at least one of each type of raised speakers' platform. This provision has been revised for clarity and a reference to ADAAG 4.32 has been removed since it may be excessive and not all speakers' platforms contain counters. Section 11.3.1(2) addresses spectator, press, and other areas. This provision has been revised consistent with a similar requirement for courtrooms in 11.2. See 11.2.1(1)(a) above.

Most city council chambers and legislative chambers contain a public address system and multiple microphones for numerous speakers. In such facilities, it is more efficient to supplement an audio-amplification system with a permanently installed assistive listening system to enable people who are deaf or hard of hearing to participate in the proceedings. Section 11.3.2 requires a permanently installed assistive listening system in each assembly area equipped with an audio-amplification system. The interim rule required a permanently installed assistive listening system in 50 percent of all hearing rooms, meeting rooms, and chambers designated for public use. As revised in the final rule, this provision is more consistent with existing ADAAG requirements in 4.1.3(19)(b). This provision differs from 4.1.3(19)(b) in that it applies without respect to occupancy load or the provision of fixed seating.

12. Detention and Correctional Facilities

This section addresses detention and correctional facilities where occupants are under some degree of restraint or restriction for security reasons and provides scoping and technical requirements for accessible cells or rooms.

12.1 General

This provision identifies the types of facilities covered by Section 12, including jails, prisons, reformatories, and juvenile detention centers. All public areas and those common use areas serving accessible cells are subject to existing ADAAG except the requirements for areas of rescue assistance and signage. In response to inquiries concerning the need for elevator access or complying stairs to the upper tiers of housing facilities where there are no accessible cells, an exception has been added in the final rule. Under this exception, an elevator complying with 4.10 or stairs complying with 4.9 are not required in multi-story housing facilities where accessible cells or rooms and all common use areas serving them, as well as all public use areas, are on an accessible route.

12.2 Entrances and Security Systems

This section covers entrances and security screening devices. Section 12.2.1 requires that public entrances, including those that are secured, be accessible as required by ADAAG 4.1.3(8). Entrance doors that are operated by security personnel are exempt from the requirements in ADAAG 4.13 (Doors) for door hardware, opening forces, and automatic doors. Doors subject to security requirements prohibiting full compliance with the provisions of ADAAG 4.13 are similarly exempt. The exception in 12.2.1 may apply to doors used by persons other than inmates and facility staff, such as counselors and instructors. It is important that evacuation planning address egress for all persons who may access secured areas since a person with a disability might not be able to independently operate doors meeting this exception. This consideration has been included in an appendix note. Section 12.2.2 requires that an accessible route be provided through or around security screening devices located at accessible entrances. Section 12.2.2 has been editorially revised to

reference a circulation path in lieu of a path of travel.

Section 12.2.2 of the interim rule contained requirements for entrances and passenger loading zones used only by inmates or detainees and security personnel. These requirements have been removed in the final rule as ADAAG 4.1.3(8) addresses all types of entrances except service entrances and ADAAG 4.1.2(5) addresses passenger loading zones.

Comment. In the interim rule, the exception in 12.2.1 for doors subject to security requirements required compliance to the ''maximum extent feasible.'' One comment from a State agency recommended that this term be removed because it complicates enforcement.

Response. The term ''maximum extent feasible'' has been removed from the exception in 12.2.1 and the exception has been further modified for clarity. In addition, a reference in this exception to ADAAG 4.13.6, which specifies maneuvering clearances at doors, including latch-side clearance, has been removed. This reference had been included in the interim rule for doors operated by security personnel since such operation precludes the need for clearance at the latch side of doors. However, since ADAAG 4.13.6 also contains specifications for maneuvering space, which is essential for passage through doors, including those operated by security personnel, the exemption from 4.13.6 has been removed. The requirements in ADAAG 4.13.6 are not known to pose any conflict with security requirements for doors. An identical exception in 12.5.2(1) for doors and doorways serving holding or housing cells has been similarly modified.

12.3 Visiting Areas

This section addresses non-contact visiting areas. At least five percent of fixed cubicles on both the public and secured side must be accessible under 12.3(1). Accessible cubicles for inmates or detainees are required only in those visiting areas serving accessible housing or holding cells. Section 12.3(2) requires cubicles separated by solid partitions to be equipped with devices to facilitate voice communication. These requirements are consistent with those for visiting areas covered by section 11.4.3 (Courthouse Holding Facilities). Few comments were received and only editorial changes have been made to this provision.

12.4 Holding and Housing Cells or Rooms: Minimum Number

12.4.1 Holding Cells and General Housing Cells or Rooms. Minimum Number. This section requires that a minimum of two percent, but not less than one, of the total number of holding or general housing cells or rooms provided in a facility be accessible in new construction.

The interim rule provided that at least three percent, but not less than one, of the total number of housing or holding cells or rooms provided in a facility shall be accessible.

Comment. Most comments from detention and correctional authorities considered the three percent minimum specified in the interim rule excessive in view of the demonstrated need. Several State correctional agencies recommended one percent. The Illinois Department of Corrections and 33 concurring State correctional agencies urged that the minimum not exceed two percent. One disability organization supported the three percent requirement. With respect to detention facilities, one county government recommended one percent for holding cells.

Most of the recommendations for a lower percentage were based on survey data submitted in response to the NPRM. As noted in the interim rule, among various responding States, the percentage of inmates with mobility impairments ranged from .12 to 1.35 percent and the average was .46 percent. A survey conducted by the Association of State Correctional Administrators (ASCA) provided a significantly higher average of 3.39 percent, suggesting that a wider range of disabilities, not just mobility impairments, was included. In response to the interim rule, the California Department of Corrections compiled additional survey data from States, the ASCA, and the Federal Bureau of Prisons. The results of that survey indicated that the average percentage of inmates with some type of disability is 1.56 percent.

Few comments provided survey data on city or county facilities. In response to the NPRM, several State entities that oversee such facilities submitted survey results. The percentage of inmates with disabilities housed in jails in Nebraska and Texas was .07 percent and .48 percent, respectively. New York City previously indicated that .25 percent of its inmate population used wheelchairs. Other estimates for local facilities ranged from less than one percent to two percent.

The three percent minimum specified in the interim rule was based in part on the aging of the prison population, a consideration several commenters raised, and existing data demonstrating that the prevalence of disability increases with age. However, comments from State correctional agencies to the interim rule indicated that the perceived aging of the prison population is not supported by current demographic data. The California Department of Corrections indicated that nationally the average age of inmates is 29.8 years and inmates aged 60 years or older comprise less than one percent of the total population based on its survey of States. The Illinois Department of Corrections documented among various States that the number of inmates over 50 years old has remained constant or increased only slightly. The highest increase reported by any State was 1.2 percent over a six year period. One comment from a county authority also considered increases in this population to be negligible.

Response. Consistent with a large majority of commenters, as well as the survey data provided, the minimum number of holding or general housing cells or rooms required to be accessible in new construction has been reduced to two percent.

Dispersion. The interim rule provided that accessible cells shall be dispersed among all categories and types of general housing and holding areas. The final rule does not contain a requirement for dispersion of accessible cells.

Comment. Many comments from State and local corrections officials reiterated arguments made in response to the NPRM that accessible cells should be required on a system-wide basis instead of for each newly built or altered facility. This would provide a level of administrative discretion operators consider essential in determining which facilities of a system are appropriate for housing inmates with disabilities. According to the commenters, the availability of certain programs, services, and staff, not just architectural accessibility, are important criteria in making this determination and that freedom of choice, a fundamental consideration in ensuring access to public housing and transient lodging, is not pertinent to the assignment of housing among inmates. The California Department of Corrections stated:

> [T]he primary service of correctional facilities is to help maintain public safety through incarceration of offenders. Classification to determine placement within the system is based on many factors such as security requirements, medical needs, and other administrative determinates. Accessibility is another one of these factors

in the classification process. Given the mission of detention and correctional facilities, it is appropriate to provide equal accessibility to programs, service, and activities in an integrated environment in the most economic manner possible which includes mitigating staffing costs, making use of community resources and grouping inmates with disabilities to provide specialized services or training. The Access Board's concept that assignment polices may change and that construction opportunities applied piecemeal will eventually lead to full accessibility is clearly based on assumptions of accessibility applied to most government services and public accommodations. In a custodial setting, accessibility is only one placement consideration which applies to an extremely slight population number. . . . Accessibility can be optimally provided in a limited number of facilities much more thoroughly and economically, and with a comparable quality of providing inmate services, programs, and activities.

Similar arguments were made by the Illinois Department of Corrections in comments supported by 33 other State correctional entities. Commenters emphasized these concerns in the context of alterations where requirements for accessible cells may be triggered in existing facilities that cannot support inmates with disabilities either architecturally or programmatically. According to the commenters, provision of accessible cells in an alteration will by no means ensure that the necessary level of access to programs, services, common use areas and other amenities available to inmates will be achieved. According to commenters, providing access in some existing facilities will waste limited resources and lead to a greater number of accessible cells available only to inmates without disabilities where misuse of elements, such as grab bars, is more likely to occur. Thus, correctional authorities recommended that a percentage of accessible cells be required for the entire system instead of at each newly constructed or altered facility.

Response. New construction presents the greatest opportunity for access. Why this would not hold true for detention and correctional facilities was not clearly indicated in comments. Rather, the concerns expressed in this area are relevant primarily to the requirement for access in alterations in 12.4.5 (Alterations to Cells or Rooms). In the interim rule, this provision applied the minimum scoping percentage of new construction to the total number of cells or rooms altered in a facility. Alterations provide important opportunities for access as recognized by the ADA; however, corrections authorities make a compelling case for allowing discretion in detention and correctional facilities. Concerns of practicality, and those of feasibility raised in the NPRM, and various operational factors indicate that in many instances the cost of achieving access at many existing facilities will greatly outweigh the benefits. For these reasons, section 12.4.5 and the requirement for alterations have been reserved, thus limiting to new construction the two percent scoping requirement. This requirement has been reserved, rather than permanently removed, since it may be revisited in the future. Further, there will be instances when the opportunities for access in alterations should be considered, particularly where a system has few, if any, accessible cells. In certain cases, complying with the requirements of section 12 may be practical, technically feasible, and facilitate compliance with other ADA requirements, including those for program access. While reserving this requirement may pose confusion over the minimum level of access required in alterations, the obligation correctional entities have in providing program access may effectively and practically determine the degree of access that should be provided in an alteration. The Department of Justice's title II regulation states that public entities must operate each service, program, or activity so that the service, program, or activity, when viewed in its entirety, is readily accessible to and useable by individuals with disabilities. Thus, the lack of a specific requirement for accessible prison alterations does not excuse a public entity from providing access to all of the prison's programs and services, when viewed in their entirety.

Comment. The interim rule contained a requirement that accessible cells be dispersed among each type or category of housing or holding cells. A few commenters recommended that prison operators have greater discretion in locating cells on a site. The Bureau of Prisons noted that according to its records inmates with disabilities are rarely housed in maximum security facilities and recommended that accessible cells not be required in this category of housing.

Response. The requirement for dispersion of accessible cells in each category or type of housing or holding cell has been removed. Thus, at sites where different categories of housing or levels of security are provided, operators need not locate accessible cells in each category or security level. A recommendation that accessible cells be dispersed among different types of holding cells and different categories and security levels of housing has been added to an appendix note.

Comment. Several commenters requested clarification that the minimum percentage applies to a facility generally and that accessible cells are not required in each building of a facility.

Response. The minimum scoping requirement of two percent is based on the total number of housing or holding cells or rooms provided in a ''facility.'' As defined in ADAAG 3.5 (Definitions), the term ''facility'' includes the buildings and structures of a site. While the percentage is based on the total number of cells or rooms that may be provided at a site, the location of accessible cells or rooms in each building is not required.

12.4.2 Special Holding and Housing Cells or Rooms. This section requires that where holding or housing cells or rooms are provided for special purposes, at least one of each type must be accessible. This includes those used for purposes of protective custody, disciplinary detention, detoxification, and medical isolation.

Comment. One correctional authority recommended that this requirement reference other purposes, including disciplinary segregation, administrative detention, and orientation.

Response. These special purposes have been added to the requirement.

Comment. The interim rule noted that ''an accessible special holding or housing cell or room may serve more than one purpose.'' One disability organization indicated that this should only be permitted where inaccessible cells also serve multiple purposes, otherwise inmates with disabilities may not have access to the same level of service provided. This comment also suggested that a recommendation be included in the appendix for a greater number of accessible special purpose cells at large facilities.

Response. The statement concerning accessible cells serving more than one purpose has been removed to ensure equivalency in the provision of access. Accessible special holding cells may serve more than one purpose where other special holding cells serve more than one purpose. Where special holding cells serve different purposes, then one of each type must be accessible. This clarification has been included as an appendix note to 12.4.2. Also added to this appendix note is a recommendation that more than one of each type should be accessible in large facilities where a number of cells of each type serve different holding areas or housing units.

Comment. One correctional agency recommended that this section should only apply to those medical isolation

cells that are specifically designed for that purpose and not general housing cells or medical care rooms that may also be used to isolate inmates for medical purposes.

Response. An appendix note in the interim rule that distinguished between medical isolation cells covered by 12.4.2 and patient bedrooms covered by 12.4.4 has been relocated to this section. Additional clarification has been added to this appendix note indicating that 12.4.2 applies to cells specifically designed for purposes of medical isolation.

Comment. One corrections agency recommended that cells or rooms used to monitor inmates or detainees likely to attempt suicide be exempt from the requirement for grab bars. Such cells or rooms are typically designed without any protrusions.

Response. The NPRM asked questions concerning grab bars and the risk of suicide. A majority of the responses did not generally regard grab bars as posing a greater risk since effective suicide prevention is based on a variety of measures, including evaluation, classification, and surveillance of inmates, not just cell design. However, the installation of grab bars may complicate the design of facilities that are used for the purpose of suicide watch. An exception to the requirement in ADAAG 4.16 (Water closets) for grab bars has been added for cells or rooms specially designed to be used solely for the purpose of suicide prevention.

12.4.3 Accessible Cells or Rooms for Persons with Hearing Impairments. This section requires access for persons who are deaf or hard of hearing in housing or holding cells or rooms equipped with audible emergency warning systems or permanently installed telephones.

Comment. One State correctional authority recommended that the scoping be reduced from three to one percent based on survey data received in response to the NPRM.

Response. The data received in response to the NPRM indicated that the population of inmates who are deaf or hard of hearing is only slightly higher than the population of inmates with mobility impairments. Consistent with the requirement for accessible cells in section 12.4.1, the minimum scoping has been reduced from three to two percent.

12.4.4 Medical Care Facilities. This section applies the requirements of ADAAG 6 (Medical Care Facilities) to medical care facilities in detention and correctional facilities. Few comments addressed this provision and no changes have been made.

12.4.5 Alterations to Rooms or Cells. This section has been reserved. See the discussion under 12.4.1 (Holding Cells and General Housing Cells or Rooms), ''Dispersion''.

12.5 Requirements for Accessible Cells or Rooms

This section contains the minimum requirements for accessible cells or rooms. These requirements, which are similar to those for holding cells in judicial facilities in ADAAG 11.4 (Courthouse Holding Facilities), are based primarily on existing ADAAG specifications, including those for transient lodging in section 9 (Accessible Transient Lodging). Requirements are provided for doors and doorways, toilet and bathing facilities, beds, drinking fountains, fixed seating and tables, benches, storage, controls, and accommodations for persons with hearing impairments. The majority of the comments received in response to this provision addressed restrooms, beds, and fixed seating and tables.

Section 12.5.2 has been revised to address those situations where a covered element or space serves an accessible cell or room but is located outside the cell or room.

(1) Doors and Doorways. This section contains an exception for doors that are operated only by security personnel or subject to security requirements prohibiting full compliance from the requirements in ADAAG 4.13 (Doors). This exception has been modified consistent with 12.2.1 and 12.2.2. (For further discussion of the modifications, see 12.2 (Entrances).

(2) Toilet and Bathing Facilities. Comment. Several commenters recommended that a grab bar shorter than the required 36 inches be permitted behind water closets so that combination lavatory and water closet units may be used. Currently, such units are equipped with a grab bar approximately 24 inches long. A manufacturer of such units indicated that developing a fully compliant unit is cost-prohibitive.

Response. An exception for the length of the rear grab bar on combination units has not been provided since separate, accessible lavatories and toilets are readily available. For further discussion, see 11.4.2 (Requirements for Accessible Cells).

Comment. One commenter recommended that floor-mounted grab bars be permitted.

Response. ADAAG does not specifically address floor-mounted grab bars. However, in some situations they may provide an effective alternative to wall-mounted grab bars so long as the requirements of ADAAG 4.26 (Handrails, Grab Bars, and Tub and Shower Seats), including the specifications for structural strength, are met.

(3) Beds. Comment. Several comments addressed the requirements for beds. One comment recommended that the minimum clear floor space required along one side of beds be 5 feet long instead of the full length of the bed. One comment from an inmate with a disability recommended that headroom between bunkbeds be specified while another commenter advised the height of beds should be 19 to 21 inches.

Response. Clear floor space 36 inches wide is required along side of beds the full length. However, elements, such as writing counters, may overlap this space so long as the required knee and toe clearance is provided. An appendix note provides some guidance on headroom between bunkbeds and recommends a height for beds of 17 to 19 inches based on existing ADAAG requirements for water closets and benches. No changes have been made to this provision.

Technical inquiries have been received concerning the number of beds that should be accessible in large barracks-style rooms with many beds. Since beds may not be fixed, a minimum number of accessible beds is not specified in this section, consistent with existing ADAAG. However, a recommendation has been added to the appendix that the minimum scoping for cells or rooms (two percent) also be applied to the number of beds in large cells or rooms with many beds.

(4) Drinking Fountains. (5) Fixed or Built-In Seating and Tables. (6) Fixed Benches. One comment concerning fixed or built-in seating and tables seemed to confuse the requirements of section 12.5.2 with those for common use areas in 12.1. Section 12.5.2 applies only to elements located within accessible cells or rooms. Those elements located outside cells for common use by inmates, such as in dayrooms which adjoin cells, are subject to 12.1 and its application of existing ADAAG for common use areas serving accessible cells. An appendix note has been added to 12.5.2 to clarify this. In addition, the requirements in 12.5.2 for drinking fountains, fixed or built-in seating and tables, and fixed benches have been modified to more clearly apply to elements located within housing or holding cells. Paragraph (4) has been modified to require ''at least one'' wheelchair accessible drinking fountain where provided within a holding or housing cell. Drinking fountains located in common use areas

are subject to existing ADAAG and its requirement that drinking fountains be accessible to both persons using wheelchairs and those who may have difficulty bending or stooping. Paragraph (5), which covers fixed or built-in seating and tables, and paragraph (6), which addresses fixed benches, has been similarly modified. In addition, paragraph (6) has been modified to require fixed benches to be mounted to the wall or provide back support.

(7) Storage. (8) Controls. (9) Accommodations for Persons with Hearing Impairments. Few comments addressed these sections and no changes have been made to these provisions.

12.6 Visual Alarms and Telephones

This section contains technical requirements for cells that are accessible to persons who are deaf or hard of hearing. Section 12.6 requires that where cells are equipped with audible emergency warning systems, a visual alarm complying with ADAAG 4.28.4 (Auxiliary Alarms) shall also be provided. This section also requires that permanently installed telephones, if provided in cells, shall have volume controls complying with ADAAG 4.31.5 (Hearing Aid Compatible and Volume Control Telephones). An exception from the requirement for visual alarms is provided where inmates or detainees are not allowed independent means of egress. No substantive changes have been made to this provision.

The interim final rule clarified that portable devices may be used in lieu of permanent devices if necessary wiring and outlets are provided. This was noted as an example of ''equivalent facilitation,'' a provision in ADAAG 2.2 that permits alternative designs that provide equal or greater access. Since equivalent facilitation pertains to all ADAAG provisions, this specific example has been removed in the final rule.

Comment. The Committee on Acoustics in Corrections recommended that design guidelines on acoustics developed by the American Correctional Association should be incorporated in section 12. These specifications are particularly essential in the noisy environments of detention and correctional facilities and may help prevent hearing loss caused by constant exposure to loud noise.

Response. Guidelines for acoustics have not been incorporated into this rule because none had been previously recommended or proposed and made available for public comment. While acoustics in correctional facilities is an important design consideration, it involves concerns such as prevention of hearing loss, that lie beyond the scope of ADAAG and its minimum criteria for access to the built environment. Some of these issues may be more appropriately addressed by agencies that oversee correctional systems or provide accreditation.

13. Accessible Residential Housing

In the interim rule, ADAAG 13 addressed accessibility requirements for residential facilities. This section has been reserved in the final rule.

Since the publication of the interim rule, the American National Standards Institute (ANSI) A117 Committee has developed a draft proposal to add new sections pertaining to accessible and adaptable residential housing to the CABO/ANSI A117.1 standard. The CABO/ANSI standard for Accessible and Usable Buildings and Facilities will be revised in 1997 to incorporate these new technical and scoping provisions.

The Access Board is committed to coordinating its guidelines with private sector standards and model codes to the extent possible. The development of accessibility standards for accessible residential housing by the ANSI committee at the time the Access Board is publishing guidelines in the same area, presents a unique opportunity for the Access Board to promote greater uniformity in accessibility standards. Accordingly, the Access Board is reserving ADAAG 13 (Accessible Residential Housing) until it has an opportunity to review the final CABO/ANSI standard. Upon completion of its review, the Access Board will issue guidelines for accessible residential housing.

14. Public Rights-of-Way

In the interim rule, ADAAG 14 included provisions for new construction and alterations of pedestrian and related facilities in the public rights-of-way. This section has been reserved in the final rule.

Comment. The majority of the comments received in response to the NPRM and the interim rule concerned ADAAG 14 (Public Rights-of-Way). Commenters were particularly concerned with the application of the new construction provisions of section 14 to existing facilities. Many of these commenters, including public works agencies, transportation departments, and traffic consultants, were concerned that ADAAG 14.1 would be applied to transition plan construction, and in particular, the number, location, and design of curb ramps, in existing developed rights-of-way.

Response. Section 14 of the interim rule contained new construction provisions which were not intended to apply to existing facilities in the public right-of-way. With respect to alterations, section 14 contained less stringent scoping and technical provisions for alterations to established rights-of-way where there is site infeasibility. Few critical comments were directed to the accessibility requirements for alterations. The response to both the NPRM and the interim rule clearly indicated the need for substantial education and outreach regarding the application of guidelines in this area.

Pedestrian facility design, and in particular, accessible pedestrian design, is a new responsibility for many traffic engineers. Within the highway industry, there is disparate understanding of pedestrian accessibility criteria generally, and the application of the ADAAG 14 provisions for new construction contained in the interim rule, in particular. As a result, the Access Board has elected to reserve ADAAG 14 (Public Rights-of-Way) in this final rule. The Access Board has embarked upon an ambitious program of outreach to governmental and private-sector organizations in the transportation industry to promote the incorporation of pedestrian accessibility criteria into current and proposed industry guidelines, standards, and recommended practices. The guidelines contained in section 14 of the interim rule have been adopted by the State of Alabama and are being used to guide policies on pedestrian accessibility in the States of California, New Jersey and Florida. Several cities, including Portland, Oregon and Seattle, Washington have pedestrian planning requirements that are substantially similar to those contained in the interim rule.

In a future rulemaking, the Access Board will review its education and outreach program and the impact of the States' and localities' regulatory efforts in this area, and will consider publication of requirements for accessibility in the public right-of-way.

Technical Assistance

Under both the Architectural Barriers Act and the Americans with Disabilities Act, the Access Board provides technical assistance and training for entities covered under the acts. The Access Board's toll-free number allows callers to receive technical assistance and to order publications. The Access Board conducts in-depth training programs to advise and educate the general public, as well as architects and other professionals on the accessibility

guidelines and requirements. In addition, the Access Board is developing a manual for use by both technical and general audiences. The general manual on ADAAG requirements will be a useful tool in understanding ADAAG whether for purposes of compliance or as a reference for accessible design.

Regulatory Process Matters

Regulatory Assessment

These guidelines are issued to provide guidance to the Department of Justice and the Department of Transportation in establishing accessibility standards for new construction and alterations of State and local government facilities covered by title II of the ADA. The standards established by the Department of Justice and the Department of Transportation must be consistent with these guidelines.

Under Executive Order 12866, the Board must determine whether these guidelines are a significant regulatory action. The Executive Order defines a ''significant regulatory action'' as one that is likely to result in a rule that may:

(1) Have an annual effect on the economy of $100 million or more or adversely affect in a material way the economy, a sector of the economy, productivity, competition, jobs, the environment, public health or safety, or State, local, or tribal governments or communities;

(2) Create a serous inconsistency or otherwise interfere with an action taken or planned by another agency;

(3) Materially alter the budgetary impact of entitlements, grants, user fees, or loan programs or the rights and obligations of recipients thereof; or

(4) Raise novel legal or policy issues arising out of legal mandates, the President' priorities, or the principles set forth in the Executive Order.

For significant regulatory actions that are expected to have an annual effect on the economy of $100 million or more or adversely affect in a material way the economy, a sector of the economy, productivity, competition, jobs, the environment, public health or safety, or State, local or tribal governments or communities, a written assessment must be prepared of the costs and benefits anticipated from the regulatory action and any potentially effective and reasonably feasible alternatives of the planned regulation. In both the proposed and interim rules for accessibility guidelines for State and local government buildings and facilities, the Board determined that those rules met the criteria for a significant regulatory action in paragraph (1) above under Executive Order 12866. As a result, a Preliminary Regulatory Impact Analysis was prepared for the proposed rule and a Regulatory Assessment was prepared for the interim final rule. In addition to miscellaneous provisions, both the proposed rule and the interim final rule addressed the addition of four new sections to the Americans with Disabilities Accessibility Guidelines. Those sections included judicial, legislative and regulatory facilities (section 11); detention and correctional facilities (section 12); housing (section 13) and public rights-of-way (section 14).

As discussed in more detail in the Section-by-Section analysis above, there have been three major revisions made in this final rule: (1) the reserving of section 13 which previously addressed accessibility requirements in housing; (2) the reserving of section 14 which addressed public rights-of-way; and (3) the reduction of the scoping for accessible cells in detention facilities from three percent to two percent. In addition, the final rule eliminates requirements for (1) outlets, wiring and conduit for communications in judicial, regulatory and legislative facilities; (2) areas of rescue assistance in detention facilities; and reduces scoping requirements for visible alarms from three percent to two percent in detention facilities. These and other revisions have greatly reduced the economic impact previously imposed by the interim rule for State and local government facilities. The final rule has created a small increase in costs in only one aspect: in Section 11.2.2, the scoping for permanent listening systems has been increased from 50 percent of the courtrooms to 100 percent of the courtrooms. Accordingly, because the overall effect of the final rule reduces, rather than increases, the impact of the interim final rule, the Board has determined that this final rule does not meet the criteria for a significant rule under paragraph (1) above in that it will not have an annual effect on the economy of $100 million or more or adversely affect in a material way the economy, a sector of the economy, productivity, competition, jobs, the environment, public health or safety, or State, local, or tribal governments or communities. Because the final rule does not meet the criteria under paragraph (1) above, a regulatory assessment has not been prepared.

The Board and the Office of Management and Budget (OMB) have, however, determined that this final rule meets the other criteria for a significant regulatory action (i.e., the final rule raises novel, legal or policy issues arising out of legal mandates), and OMB has reviewed the final rule.

The guidelines adhere to the principles of the Executive Order. Following the issuance of the proposed rule, the Board held five public hearings in major cities across the country. Notices of the hearings and invitations to attend were sent to major state and local government entities in those areas. In addition, copies of the notice of proposed rule and the interim final rule as well as the regulatory assessments prepared in connection with those rules were mailed directly to major associations of State and local governmental entities across the country and various responsible agencies in individual states for their review and comment. Those comments were carefully analyzed and the major issues discussed in both the interim final rule and this final rule.

Regulatory Flexibility Act Analysis

Under the Regulatory Flexibility Act, the publication of a rule requires the preparation of a regulatory flexibility analysis if such rule could have a significant economic impact on a substantial number of small entities. For the reasons discussed above, the Board has determined that these guidelines will not have such an impact and accordingly, a regulatory flexibility act analysis has not been prepared.

Federalism Statement

These guidelines will have limited Federalism impacts. The impacts imposed upon State and local government entities are the necessary result of the ADA itself. Every effort has been made by the Access Board to lessen the impact of these guidelines on State and local government entities. As discussed in more detail in the Section-by-Section analysis above, the final rule has revised the ADA Accessibility Guidelines for State and Local Government facilities and has greatly reduced the economic impact of the interim guidelines.

The Preliminary Regulatory Impact Analysis (PRIA) prepared in connection with the proposed rulemaking and the Regulatory Assessment prepared for the interim final rule served as the Federalism Statements for those rules under Executive Order 12612. Because the overall impact of this final rule reduces rather than increases the impact of the interim rule, an additional Federalism Statement is unnecessary for purposes of this rule.

Unfunded Mandates Reform Act

Under the Unfunded Mandates Reform Act, Federal agencies must prepare a written assessment of the effects of any Federal mandate in a final rule that may result in the expenditure by State, local, and tribal governments, in the aggregate, or by the private sector, of $100 million or more in any one year. Excluded from the requirements of that Act, are provisions which (1) enforce the constitutional rights of individuals; or (2) establish or enforce a statutory right that prohibits discrimination on the basis of race, color, religion, sex, national origin, age, handicap or disability. Guidelines promulgated pursuant to the Americans with Disabilities Act are therefore excluded from the application of the Unfunded Mandates Reform Act and a written assessment is not required for this final rule.

Enhancing the Intergovernmental Partnership

As discussed in the supplementary information above, on December 21, 1992, the Access Board published a NPRM in the **Federal Register** which proposed to amend ADAAG (36 CFR part 1191) by adding four special application sections and miscellaneous provisions specifically applicable to buildings and facilities covered by title II of the ADA. Executive Order 12875, Enhancing the Intergovernmental Partnership, encourages Federal agencies to consult with State and local governments affected by the implementation of legislation. Accordingly, following the issuance of the NPRM, the Access Board held five public hearings in major cities across the country. Notices of the hearings and invitations to attend were sent to major State and local government entities in those areas. In addition, copies of the NPRM were mailed directly to major associations of State and local governmental entities across the country and various responsible agencies in individual States. In response to the NPRM and the public hearings, a total of 148 people presented testimony on the proposed guidelines, 447 written comments were submitted to the Access Board by the end of the comment period, and an additional 127 comments were received after the close of the comment period. Although the latter comments were not timely, the Access Board considered them to the extent practicable. Two hundred and five of the comments and testimony received were from affected State and local governments.

In addition, following the publication in the **Federal Register** of the Access Board's interim rule on June 20, 1994, and the notices of proposed rulemaking by the departments of Justice and Transportation, copies of the Access Board's interim rule and the departments' NPRMs, as well as the Regulatory Assessment prepared in connection with the notices were forwarded to major State and local government associations and agencies for their review and comment. The Access Board received 246 comments on the interim rule. Almost two thirds of the comments received were from State and local governments. Many of those comments were from public works agencies, transportation departments, and traffic consultants.

The comments received in response to the NPRMs issued by the Access Board, the Department of Justice and the Department of Transportation, as well as the Access Board's interim rule were carefully analyzed and the major issues are discussed in the Section-by-Section Analysis, which also indicates the Access Board's position on each issue.

List of Subjects in 36 CFR Part 1191

Buildings and facilities, Civil rights, Individuals with disabilities, Transportation.

Authorized by vote of the Access Board on May 14, 1997.

Patrick D. Cannon,

Chairperson, Architectural and Transportation Barriers Compliance Board.

Editorial Note: This document was received at the Office of the Federal Register on December 22, 1997.

For the reasons set forth in the preamble, part 1191 of title 36 of the Code of Federal Regulations is amended as follows:

PART 1191—AMERICANS WITH DISABILITIES ACT (ADA) ACCESSIBILITY GUIDELINES FOR BUILDINGS AND FACILITIES

1. The authority citation for 36 CFR part 1191 continues to read as follows:

Authority: 42 U.S.C. 12204.

2. Appendix A to Part 1191 is amended by revising the title page, pages i, ii, 1 through 14, 14A, 15, 54, 56, 59 through 63, 67, 71 through 76; and removing pages 61A and 77 through 92 as set forth below.

3. In Part 1191, the appendix to appendix A is amended by revising pages A1, A1A, A2, A15 through A21 and removing pages A22 through A30 as set forth below.

The revisions read as follows:

BILLING CODE 8150–01–P

APPENDIX A TO PART 1191 — AMERICANS WITH DISABILITIES ACT (ADA) ACCESSIBILITY GUIDELINES FOR BUILDINGS AND FACILITIES

Americans with Disabilities Act (ADA)

Accessibility Guidelines for Buildings and Facilities

U.S. Architectural & Transportation Barriers Compliance Board
1331 F Street, N.W., Suite 1000
Washington, D.C. 20004-1111
(202) 272-5434
(202) 272-5449 TTY
(202) 272-5447 FAX

ADA ACCESSIBILITY GUIDELINES FOR BUILDINGS AND FACILITIES TABLE OF CONTENTS

1. PURPOSE **1**

2. GENERAL **1**

2.1 Provisions for Adults 1
2.2 Equivalent Facilitation 1

3. MISCELLANEOUS INSTRUCTIONS AND DEFINITIONS **2**

3.1 Graphic Conventions 2
3.2 Dimensional Tolerances 2
3.3 Notes 2
3.4 General Terminology 2
3.5 Definitions 2

4. ACCESSIBLE ELEMENTS AND SPACES: SCOPE AND TECHNICAL REQUIREMENTS **5**

4.1 Minimum Requirements 5

4.1.1 Application 5
4.1.2 Accessible Sites and Exterior Facilities: New Construction 6
4.1.3 Accessible Buildings: New Construction 7
4.1.4 (Reserved) 11
4.1.5 Accessible Buildings: Additions 11
4.1.6 Accessible Buildings: Alterations 12
4.1.7 Accessible Buildings: Historic Preservation 14

4.2 Space Allowance and Reach Ranges 14A
4.3 Accessible Route 15
4.4 Protruding Objects 21
4.5 Ground and Floor Surfaces 22
4.6 Parking and Passenger Loading Zones 24
4.7 Curb Ramps 26
4.8 Ramps 27
4.9 Stairs 30
4.10 Elevators 30
4.11 Platform Lifts (Wheelchair Lifts) 36
4.12 Windows 36
4.13 Doors 36

4.14 Entrances 40
4.15 Drinking Fountains and Water Coolers 40
4.16 Water Closets 40
4.17 Toilet Stalls 41
4.18 Urinals 44
4.19 Lavatories and Mirrors 44
4.20 Bathtubs 45
4.21 Shower Stalls 45
4.22 Toilet Rooms 45
4.23 Bathrooms, Bathing Facilities, and Shower Rooms 48
4.24 Sinks 49
4.25 Storage 49
4.26 Handrails, Grab Bars, and Tub and Shower Seats 50
4.27 Controls and Operating Mechanisms 51
4.28 Alarms 52
4.29 Detectable Warnings 53
4.30 Signage 53
4.31 Telephones 54
4.32 Fixed or Built-in Seating and Tables 56
4.33 Assembly Areas 56
4.34 Automated Teller Machines 58
4.35 Dressing and Fitting Rooms 58A

5. RESTAURANTS AND CAFETERIAS 59

6. MEDICAL CARE FACILITIES 60

7. BUSINESS, MERCANTILE AND CIVIC 61

8. LIBRARIES 62

9. ACCESSIBLE TRANSIENT LODGING 63

10. TRANSPORTATION FACILITIES 67

11. JUDICIAL, LEGISLATIVE AND REGULATORY FACILITIES 72

12. DETENTION AND CORRECTIONAL FACILITIES 74

13. RESIDENTIAL HOUSING (Reserved) 76

14. PUBLIC RIGHTS-OF-WAY (Reserved) 76

APPENDIX A1

1. PURPOSE.

This document contains scoping and technical requirements for accessibility to buildings and facilities by individuals with disabilities under the Americans with Disabilities Act (ADA) of 1990. These scoping and technical requirements are to be applied during the design, construction, and alteration of buildings and facilities covered by titles II and III of the ADA to the extent required by regulations issued by Federal agencies, including the Department of Justice and the Department of Transportation, under the ADA.

The technical requirements in section 4 (Accessible Elements and Spaces: Scope and Technical Requirements), are the same as those of the American National Standard Institute's document A117.1-1980, except as noted in this text by italics. However, the requirements in sections 4.1.1 through 4.1.7 and the special application sections are different from ANSI A117.1-1980 in their entirety and are printed in standard type.

The illustrations and text of ANSI A117.1-1980 are reproduced with permission from the American National Standards Institute. Copies of the standard may be purchased from the American National Standards Institute at 1430 Broadway, New York, New York 10018.

Paragraphs marked with an asterisk have related, nonmandatory material in the Appendix. In the Appendix, the corresponding paragraph numbers are preceded by an A.

2. GENERAL.

2.1 Provisions for Adults. *The specifications in these guidelines are based upon adult dimensions and anthropometrics.*

2.2* Equivalent Facilitation. *Departures from particular technical and scoping requirements of this guideline by the use of other designs and technologies are permitted where the alternative designs and technologies used will provide substantially equivalent or greater access to and usability of the facility.*

TABLE 1
Graphic Conventions

Convention	Description
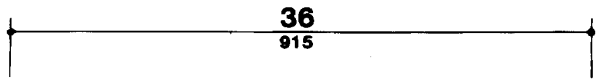	Typical dimension line showing U.S. customary units (in inches) above the line and SI units (in millimeters) below
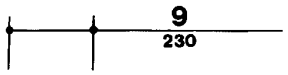	Dimensions for short distances indicated on extended line
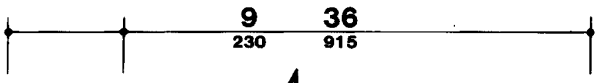	Dimension line showing alternate dimensions required
	Direction of approach
max	Maximum
min	Minimum
.....	Boundary of clear floor area
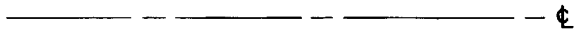	Centerline

3.0 Miscellaneous Instructions and Definitions

3. MISCELLANEOUS INSTRUCTIONS AND DEFINITIONS.

3.1 Graphic Conventions. Graphic conventions are shown in Table 1. Dimensions that are not marked minimum or maximum are absolute, unless otherwise indicated in the text or captions.

3.2 Dimensional Tolerances. All dimensions are subject to conventional building industry tolerances for field conditions.

3.3 Notes. The text of these guidelines does not contain notes or footnotes. Additional information, explanations, and advisory materials are located in the Appendix.

3.4 General Terminology.

comply with. Meet one or more specifications of *these guidelines*.

if, if ... then. Denotes a specification that applies only when the conditions described are present.

may. Denotes an option or alternative.

shall. Denotes a mandatory specification or requirement.

should. Denotes an advisory specification or recommendation.

3.5 Definitions.

Access Aisle. An accessible pedestrian space between elements, such as parking spaces, seating, and desks, that provides clearances appropriate for use of the elements.

Accessible. Describes a site, building, facility, or portion thereof that complies with *these guidelines*.

Accessible Element. An *element* specified by *these guidelines* (for example, telephone, controls, and the like).

Accessible Route. A continuous unobstructed path connecting all accessible elements and spaces of a building or facility. Interior accessible routes may include corridors, floors, ramps, elevators, lifts, and clear floor space at fixtures. Exterior accessible routes may include parking access aisles, curb ramps, *crosswalks at vehicular ways*, walks, ramps, and lifts.

Accessible Space. *Space that complies with these guidelines.*

Adaptability. The ability of certain building spaces and elements, such as kitchen counters, sinks, and grab bars, to be added or altered so as to accommodate the needs of *individuals with or without disabilities* or to accommodate the needs of persons with different types or degrees of disability.

Addition. *An expansion, extension, or increase in the gross floor area of a building or facility.*

Administrative Authority. A governmental agency that adopts or enforces regulations and *guidelines* for the design, construction, or *alteration* of buildings and facilities.

Alteration. *An alteration is a change to a building or facility that affects or could affect the usability of the building or facility or part thereof. Alterations include, but are not limited to, remodeling, renovation, rehabilitation, reconstruction, historic restoration, resurfacing of circulation paths or vehicular ways, changes or rearrangement of the structural parts or elements, and changes or rearrangement in the plan configuration of walls and full-height partitions. Normal maintenance, reroofing, painting or wallpapering, or changes to mechanical and electrical systems are not alterations unless they affect the usability of the building or facility.*

Area of Rescue Assistance. *An area, which has direct access to an exit, where people who are unable to use stairs may remain temporarily in safety to await further instructions or assistance during emergency evacuation.*

Assembly Area. A room or space accommodating *a group of* individuals for recreational, educational, political, social, civic, or amusement purposes, or for the consumption of food and drink.

3.5 Definitions

Automatic Door. A door equipped with a power-operated mechanism and controls that open and close the door automatically upon receipt of a momentary actuating signal. The switch that begins the automatic cycle may be a photoelectric device, floor mat, or manual switch (see power-assisted door).

Building. Any structure used and intended for supporting or sheltering any use or occupancy.

Circulation Path. An exterior or interior way of passage from one place to another for pedestrians, including, but not limited to, walks, hallways, courtyards, stairways, and stair landings.

Clear. Unobstructed.

Clear Floor Space. *The minimum unobstructed floor or ground space required to accommodate a single, stationary wheelchair and occupant.*

Closed Circuit Telephone. *A telephone with dedicated line(s) such as a house phone, courtesy phone or phone that must be used to gain entrance to a facility.*

Common Use. Refers to those interior and exterior rooms, spaces, or elements that are made available for the use of a restricted group of people (for example, *occupants of a homeless* shelter, the occupants of an office building, or the guests of such occupants).

Cross Slope. The slope that is perpendicular to the direction of travel (see running slope).

Curb Ramp. A short ramp cutting through a curb or built up to it.

Detectable Warning. *A standardized surface feature built in or applied to walking surfaces or other elements to warn visually impaired people of hazards on a circulation path.*

Egress, Means of. *A continuous and unobstructed way of exit travel from any point in a building or facility to a public way. A means of egress comprises vertical and horizontal travel and may include intervening room spaces, doorways, hallways, corridors, passageways, balconies, ramps, stairs, enclosures, lobbies, horizontal exits, courts and yards. An accessible means of egress is one that complies with these guidelines and does not include stairs, steps, or escalators. Areas of rescue assistance or evacuation elevators may be included as part of accessible means of egress.*

Element. *An architectural or mechanical component of a building, facility, space, or site, e.g., telephone, curb ramp, door, drinking fountain, seating, or water closet.*

Entrance. *Any access point to a building or portion of a building or facility used for the purpose of entering. An entrance includes the approach walk, the vertical access leading to the entrance platform, the entrance platform itself, vestibules if provided, the entry door(s) or gate(s), and the hardware of the entry door(s) or gate(s).*

Facility. *All or any portion of buildings, structures, site improvements, complexes, equipment, roads, walks, passageways, parking lots, or other real or personal property located on a site.*

Ground Floor. *Any occupiable floor less than one story above or below grade with direct access to grade. A building or facility always has at least one ground floor and may have more than one ground floor as where a split level entrance has been provided or where a building is built into a hillside.*

Mezzanine or Mezzanine Floor. *That portion of a story which is an intermediate floor level placed within the story and having occupiable space above and below its floor.*

Marked Crossing. A crosswalk or other identified path intended for pedestrian use in crossing a vehicular way.

Multifamily Dwelling. Any building containing more than two dwelling units.

Occupiable. *A room or enclosed space designed for human occupancy in which individuals congregate for amusement, educational or similar purposes, or in which occupants are engaged at labor, and which is equipped with means of egress, light, and ventilation.*

Operable Part. A part of a piece of equipment or appliance used to insert or withdraw objects, or to activate, deactivate, or adjust the equipment or appliance (for example, coin slot, pushbutton, handle).

Path of Travel. *(Reserved).*

3.5 Definitions

Power-assisted Door. A door used *for human passage* with a mechanism that helps to open the door, or relieves the opening resistance of a door, upon the activation of a switch or a continued force applied to the door itself.

Private Facility. *A place of public accommodation or a commercial facility subject to title III of the ADA and 28 CFR part 36 or a transportation facility subject to title III of the ADA and 49 CFR 37.45.*

Public Facility. *A facility or portion of a facility constructed by, on behalf of, or for the use of a public entity subject to title II of the ADA and 28 CFR part 35 or to title II of the ADA and 49 CFR 37.41 or 37.43.*

Public Use. Describes interior or exterior rooms or spaces that are made available to the general public. Public use may be provided at a building or facility that is privately or publicly owned.

Ramp. A walking surface which has a running slope greater than 1:20.

Running Slope. The slope that is parallel to the direction of travel (see cross slope).

Service Entrance. An entrance intended primarily for delivery of goods or services.

Signage. *Displayed* verbal, symbolic, *tactile,* and pictorial information.

Site. A parcel of land bounded by a property line or a designated portion of a public right-of-way.

Site Improvement. Landscaping, paving for pedestrian and vehicular ways, outdoor lighting, recreational facilities, and the like, added to a site.

Sleeping Accommodations. Rooms in which people sleep; for example, dormitory and hotel or motel guest rooms or suites.

Space. *A definable area, e.g., room, toilet room, hall, assembly area, entrance, storage room, alcove, courtyard, or lobby.*

Story. *That portion of a building included between the upper surface of a floor and upper surface of the floor or roof next above. If such portion of a building does not include occupiable space, it is not considered a story for purposes of these guidelines. There may be more than one floor level within a story as in the case of a mezzanine or mezzanines.*

Structural Frame. The structural frame shall be considered to be the columns and the girders, beams, trusses and spandrels having direct connections to the columns and all other members which are essential to the stability of the building as a whole.

TDD *(Telecommunication Devices for the Deaf). See text telephone.*

TTY (Tele-Typewriter). *See text telephone.*

Tactile. Describes an object that can be perceived using the sense of touch.

Technically Infeasible. *See 4.1.6(1)(j) EXCEPTION.*

Text Telephone (TTY). *Machinery or equipment that employs interactive text based communications through the transmission of coded signals across the standard telephone network. Text telephones can include, for example, devices known as TDDs (telecommunication display devices or telecommunication devices for deaf persons) or computers with special modems. Text telephones are also called TTYs, an abbreviation for tele-typewriter.*

Transient Lodging.* *A building, facility, or portion thereof, excluding inpatient medical care facilities and residential facilities, that contains sleeping accommodations. Transient lodging may include, but is not limited to, resorts, group homes, hotels, motels, and dormitories.*

Vehicular Way. A route intended for vehicular traffic, such as a street, driveway, or parking lot.

Walk. An exterior pathway with a prepared surface intended for pedestrian use, including general pedestrian areas such as plazas and courts.

NOTE: Sections 4.1.1 through 4.1.7 are different from ANSI A117.1 in their entirety and are printed in standard type (ANSI A117.1 does not include scoping provisions).

4. ACCESSIBLE ELEMENTS AND SPACES: SCOPE AND TECHNICAL REQUIREMENTS.

4.1 Minimum Requirements.

4.1.1* Application.

(1) General. All areas of newly designed or newly constructed buildings and facilities and altered portions of existing buildings and facilities shall comply with section 4, unless otherwise provided in this section or as modified in a special application section.

(2) Application Based on Building Use. Special application sections provide additional requirements based on building use. When a building or facility contains more than one use covered by a special application section, each portion shall comply with the requirements for that use.

(3)* Areas Used Only by Employees as Work Areas. Areas that are used only as work areas shall be designed and constructed so that individuals with disabilities can approach, enter, and exit the areas. These guidelines do not require that any areas used only as work areas be constructed to permit maneuvering within the work area or be constructed or equipped (i.e., with racks or shelves) to be accessible.

(4) Temporary Structures. These guidelines cover temporary buildings or facilities as well as permanent facilities. Temporary buildings and facilities are not of permanent construction but are extensively used or are essential for public use for a period of time. Examples of temporary buildings or facilities covered by these guidelines include, but are not limited to: reviewing stands, temporary classrooms, bleacher areas, exhibit areas, temporary banking facilities, temporary health screening services, or temporary safe pedestrian passageways around a construction site. Structures, sites and equipment directly associated with the actual processes of construction, such as scaffolding, bridging, materials hoists, or construction trailers are not included.

(5) General Exceptions.

(a) In new construction, a person or entity is not required to meet fully the requirements of these guidelines where that person or entity can demonstrate that it is structurally impracticable to do so. Full compliance will be considered structurally impracticable only in those rare circumstances when the unique characteristics of terrain prevent the incorporation of accessibility features. If full compliance with the requirements of these guidelines is structurally impracticable, a person or entity shall comply with the requirements to the extent it is not structurally impracticable. Any portion of the building or facility which can be made accessible shall comply to the extent that it is not structurally impracticable.

(b) Accessibility is not required to or in:

(i) raised areas used primarily for purposes of security or life or fire safety, including, but not limited to, observation or lookout galleries, prison guard towers, fire towers, or fixed life guard stands;

(ii) non-occupiable spaces accessed only by ladders, catwalks, crawl spaces, very narrow passageways, tunnels, or freight (non-passenger) elevators, and frequented only by service personnel for maintenance, repair, or occasional monitoring of equipment; such spaces may include, but are not limited to, elevator pits, elevator penthouses, piping or equipment catwalks, water or sewage treatment pump rooms and stations, electric substations and transformer vaults, and highway and tunnel utility facilities; or

(iii) single occupant structures accessed only by a passageway that is below grade or that is elevated above standard curb height, including, but not limited to, toll booths accessed from underground tunnels.

4.1.2 Accessible Sites and Exterior Facilities: New Construction

4.1.2 Accessible Sites and Exterior Facilities: New Construction. An accessible site shall meet the following minimum requirements:

(1) At least one accessible route complying with 4.3 shall be provided within the boundary of the site from public transportation stops, accessible parking spaces, passenger loading zones if provided, and public streets or sidewalks, to an accessible building entrance.

(2) At least one accessible route complying with 4.3 shall connect accessible buildings, accessible facilities, accessible elements, and accessible spaces that are on the same site.

(3) All objects that protrude from surfaces or posts into circulation paths shall comply with 4.4.

(4) Ground surfaces along accessible routes and in accessible spaces shall comply with 4.5.

(5) (a) If parking spaces are provided for self-parking by employees or visitors, or both, then accessible spaces complying with 4.6 shall be provided in each such parking area in conformance with the table below. Spaces required by the table need not be provided in the particular lot. They may be provided in a different location if equivalent or greater accessibility, in terms of distance from an accessible entrance, cost and convenience is ensured.

TOTAL PARKING IN LOT	REQUIRED MINIMUM NUMBER OF ACCESSIBLE SPACES
1 to 25	1
26 to 50	2
51 to 75	3
76 to 100	4
101 to 150	5
151 to 200	6
201 to 300	7
301 to 400	8
401 to 500	9
501 to 1000	2 percent of total
1001 and over	20, plus 1 for each 100 over 1000

Except as provided in (b), access aisles adjacent to accessible spaces shall be 60 in (1525 mm) wide minimum.

(b) One in every eight accessible spaces, but not less than one, shall be served by an access aisle 96 in (2440 mm) wide minimum and shall be designated "van accessible" as required by 4.6.4. The vertical clearance at such spaces shall comply with 4.6.5. All such spaces may be grouped on one level of a parking structure.

EXCEPTION: Provision of all required parking spaces in conformance with "Universal Parking Design" (see Appendix A4.6.3) is permitted.

(c) If passenger loading zones are provided, then at least one passenger loading zone shall comply with 4.6.

(d) At facilities providing medical care or other services for persons with mobility impairments, parking spaces complying with 4.6 shall be provided in accordance with 4.1.2(5)(a) and (b) except as follows:

(i) Outpatient units and facilities: 10 percent of the total number of parking spaces provided serving each such outpatient unit or facility;

(ii) Units and facilities that specialize in treatment or services for persons with mobility impairments: 20 percent of the total number of parking spaces provided serving each such unit or facility.

(e)* Valet Parking. Valet parking facilities shall provide a passenger loading zone complying with 4.6 located on an accessible route to the entrance of the facility. Paragraphs 5(a), 5(b), and 5(d) of this section do not apply to valet parking facilities.

(6) If toilet facilities are provided on a site, then each such public or common use toilet facility shall comply with 4.22. If bathing facilities are provided on a site, then each such public or common use bathing facility shall comply with 4.23.

For single user portable toilet or bathing units clustered at a single location, at least five percent but no less than one toilet unit or bathing unit complying with 4.22 or 4.23 shall be installed at each cluster whenever typical inaccessible units are provided. Accessible units shall be identified by the International Symbol of Accessibility.

EXCEPTION: Portable toilet units at construction sites used exclusively by construction personnel are not required to comply with 4.1.2(6).

(7) Building Signage. Signs which designate permanent rooms and spaces shall comply with 4.30.1, 4.30.4, 4.30.5 and 4.30.6. Other signs which provide direction to, or information about, functional spaces of the building shall comply with 4.30.1, 4.30.2, 4.30.3, and 4.30.5. Elements and spaces of accessible facilities which shall be identified by the International Symbol of Accessibility and which shall comply with 4.30.7 are:

(a) Parking spaces designated as reserved for individuals with disabilities;

(b) Accessible passenger loading zones;

(c) Accessible entrances when not all are accessible (inaccessible entrances shall have directional signage to indicate the route to the nearest accessible entrance);

(d) Accessible toilet and bathing facilities when not all are accessible.

4.1.3 Accessible Buildings: New Construction. Accessible buildings and facilities shall meet the following minimum requirements:

(1) At least one accessible route complying with 4.3 shall connect accessible building or facility entrances with all accessible spaces and elements within the building or facility.

(2) All objects that overhang or protrude into circulation paths shall comply with 4.4.

(3) Ground and floor surfaces along accessible routes and in accessible rooms and spaces shall comply with 4.5.

(4) Interior and exterior stairs connecting levels that are not connected by an elevator, ramp, or other accessible means of vertical access shall comply with 4.9.

(5)* One passenger elevator complying with 4.10 shall serve each level, including mezzanines, in all multi-story buildings and facilities unless exempted below. If more than one elevator is provided, each passenger elevator shall comply with 4.10.

EXCEPTION 1: Elevators are not required in:

(a) private facilities that are less than three stories or that have less than 3000 square feet per story unless the building is a shopping center, a shopping mall, or the professional office of a health care provider, or another type of facility as determined by the Attorney General; or

(b) public facilities that are less than three stories and that are not open to the general public if the story above or below the accessible ground floor houses no more than five persons and is less than 500 square feet. Examples may include, but are not limited to, drawbridge towers and boat traffic towers, lock and dam control stations, and train dispatching towers.

The elevator exemptions set forth in paragraphs (a) and (b) do not obviate or limit in any way the obligation to comply with the other accessibility requirements established in section 4.1.3. For example, floors above or below the accessible ground floor must meet the requirements of this section except for elevator service. If toilet or bathing facilities are provided on a level not served by an elevator, then toilet or bathing facilities must be provided on the accessible ground floor. In new construction, if a building or facility is eligible for exemption but a passenger elevator is nonetheless planned, that elevator shall meet the requirements of 4.10 and shall serve each level in the building. A passenger elevator that provides service from a garage to only one level of a building or facility is not required to serve other levels.

EXCEPTION 2: Elevator pits, elevator penthouses, mechanical rooms, piping or equipment catwalks are exempted from this requirement.

EXCEPTION 3: Accessible ramps complying with 4.8 may be used in lieu of an elevator.

EXCEPTION 4: Platform lifts (wheelchair lifts) complying with 4.11 of this guideline and applicable State or local codes may be used in lieu of an elevator only under the following conditions:

(a) To provide an accessible route to a performing area in an assembly occupancy.

4.1.3 Accessible Buildings: New Construction

(b) To comply with the wheelchair viewing position line-of-sight and dispersion requirements of 4.33.3.

(c) To provide access to incidental occupiable spaces and rooms which are not open to the general public and which house no more than five persons, including but not limited to equipment control rooms and projection booths.

(d) To provide access where existing site constraints or other constraints make use of a ramp or an elevator infeasible.

(e) To provide access to raised judges' benches, clerks' stations, speakers' platforms, jury boxes and witness stands or to depressed areas such as the well of a court.

EXCEPTION 5: Elevators located in air traffic control towers are not required to serve the cab and the floor immediately below the cab.

(6) Windows. (Reserved).

(7) Doors.

(a) At each accessible entrance to a building or facility, at least one door shall comply with 4.13.

(b) Within a building or facility, at least one door at each accessible space shall comply with 4.13.

(c) Each door that is an element of an accessible route shall comply with 4.13.

(d) Each door required by 4.3.10, Egress, shall comply with 4.13.

(8)* The requirements in (a) and (b) below shall be satisfied independently:

(a)(i) At least 50 percent of all public entrances (excluding those in (b) below) shall comply with 4.14. At least one must be a ground floor entrance. Public entrances are any entrances that are not loading or service entrances.

(ii) Accessible public entrances must be provided in a number at least equivalent to the number of exits required by the applicable building or fire codes. (This paragraph does not require an increase in the total number of public entrances planned for a facility.)

(iii) An accessible public entrance must be provided to each tenancy in a facility (for example, individual stores in a strip shopping center).

(iv) In detention and correctional facilities subject to section 12, public entrances that are secured shall be accessible as required by 12.2.1.

One entrance may be considered as meeting more than one of the requirements in (a). Where feasible, accessible public entrances shall be the entrances used by the majority of people visiting or working in the building.

(b)(i) In addition, if direct access is provided for pedestrians from an enclosed parking garage to the building, at least one direct entrance from the garage to the building must be accessible.

(ii) If access is provided for pedestrians from a pedestrian tunnel or elevated walkway, one entrance to the building from each tunnel or walkway must be accessible.

(iii) In judicial, legislative, and regulatory facilities subject to section 11, restricted and secured entrances shall be accessible in the number required by 11.1.1.

One entrance may be considered as meeting more than one of the requirements in (b).

Because entrances also serve as emergency exits whose proximity to all parts of buildings and facilities is essential, it is preferable that all entrances be accessible.

(c) If the only entrance to a building, or tenancy in a facility, is a service entrance, that entrance shall be accessible.

(d) Entrances which are not accessible shall have directional signage complying with 4.30.1, 4.30.2, 4.30.3, and 4.30.5, which indicates the location of the nearest accessible entrance.

(9)* In buildings or facilities, or portions of buildings or facilities, required to be accessible, accessible means of egress shall be provided in the same number as required for exits by local building/life safety regulations. Where a required exit from an occupiable level above or below a level of accessible exit discharge is not accessible, an area of rescue assistance shall be provided on each such level (in a number equal to that of inaccessible required exits). Areas of rescue assistance shall comply with 4.3.11. A horizontal exit, meeting the requirements of local building/life safety regulations, shall satisfy the requirement for an area of rescue assistance.

EXCEPTION: Areas of rescue assistance are not required in buildings or facilities having a supervised automatic sprinkler system.

(10)* Drinking Fountains.

(a) Where only one drinking fountain is provided on a floor there shall be a drinking fountain which is accessible to individuals who use wheelchairs in accordance with 4.15 and one accessible to those who have difficulty bending or stooping. (This can be accommodated by the use of a "hi-lo" fountain; by providing one fountain accessible to those who use wheelchairs and one fountain at a standard height convenient for those who have difficulty bending; by providing a fountain accessible under 4.15 and a water cooler; or by such other means as would achieve the required accessibility for each group on each floor.)

(b) Where more than one drinking fountain or water cooler is provided on a floor, 50 percent of those provided shall comply with 4.15 and shall be on an accessible route.

(11) Toilet Facilities. If toilet rooms are provided, then each public and common use toilet room shall comply with 4.22. Other toilet rooms provided for the use of occupants of specific spaces (i.e., a private toilet room for the occupant of a private office) shall be adaptable. If bathing rooms are provided, then each public and common use bathroom shall comply with 4.23. Accessible toilet rooms and bathing facilities shall be on an accessible route.

(12) Storage, Shelving and Display Units.

(a) If fixed or built-in storage facilities such as cabinets, shelves, closets, and drawers are provided in accessible spaces, at least one of each type provided shall contain storage space complying with 4.25. Additional storage may be provided outside of the dimensions required by 4.25.

(b) Shelves or display units allowing self-service by customers in mercantile occupancies shall be located on an accessible route complying with 4.3. Requirements for accessible reach range do not apply.

(13) Controls and operating mechanisms in accessible spaces, along accessible routes, or as parts of accessible elements (for example, light switches and dispenser controls) shall comply with 4.27.

(14) If emergency warning systems are provided, then they shall include both audible alarms and visible alarms complying with 4.28. Sleeping accommodations required to comply with 9.3 shall have an alarm system complying with 4.28. Emergency warning systems in medical care facilities may be modified to suit standard health care alarm design practice.

(15) Detectable warnings shall be provided at locations as specified in 4.29.

(16) Building Signage.

(a) Signs which designate permanent rooms and spaces shall comply with 4.30.1, 4.30.4, 4.30.5 and 4.30.6.

(b) Other signs which provide direction to or information about functional spaces of the building shall comply with 4.30.1, 4.30.2, 4.30.3, and 4.30.5.

EXCEPTION: Building directories, menus, and all other signs which are temporary are not required to comply.

4.1.3 Accessible Buildings: New Construction

(17) Public Telephones.

(a) If public pay telephones, public closed circuit telephones, or other public telephones are provided, then they shall comply with 4.31.2 through 4.31.8 to the extent required by the following table:

Number of each type of telephone provided on each floor	Number of telephones required to comply with 4.31.2 through 4.31.8[1]
1 or more single unit	1 per floor
1 bank[2]	1 per floor
2 or more banks[2]	1 per bank. Accessible unit may be installed as a single unit in proximity (either visible or with signage) to the bank. At least one public telephone per floor shall meet the requirements for a forward reach telephone.[3]

[1] Additional public telephones may be installed at any height. Unless otherwise specified, accessible telephones may be either forward or side reach telephones.

[2] A bank consists of two or more adjacent public telephones, often installed as a unit.

[3] EXCEPTION: For exterior installations only, if dial tone first service is available, then a side reach telephone may be installed instead of the required forward reach telephone.

(b)* All telephones required to be accessible and complying with 4.31.2 through 4.31.8 shall be equipped with a volume control. In addition, 25 percent, but never less than one, of all other public telephones provided shall be equipped with a volume control and shall be dispersed among all types of public telephones, including closed circuit telephones, throughout the building or facility. Signage complying with applicable provisions of 4.30.7 shall be provided.

(c) The following shall be provided in accordance with 4.31.9:

(i) If four or more public pay telephones (including both interior and exterior telephones) are provided at a site of a private facility, and at least one is in an interior location, then at least one interior public text telephone (TTY) shall be provided. If an interior public pay telephone is provided in a public use area in a building of a public facility, at least one interior public text telephone (TTY) shall be provided in the building in a public use area.

(ii) If an interior public pay telephone is provided in a private facility that is a stadium or arena, a convention center, a hotel with a convention center, or a covered mall, at least one interior public text telephone (TTY) shall be provided in the facility. In stadiums, arenas and convention centers which are public facilities, at least one public text telephone (TTY) shall be provided on each floor level having at least one interior public pay telephone.

(iii) If a public pay telephone is located in or adjacent to a hospital emergency room, hospital recovery room, or hospital waiting room, one public text telephone (TTY) shall be provided at each such location.

(iv) If an interior public pay telephone is provided in the secured area of a detention or correctional facility subject to section 12, then at least one public text telephone (TTY) shall also be provided in at least one secured area. Secured areas are those areas used only by detainees or inmates and security personnel.

(d) Where a bank of telephones in the interior of a building consists of three or more public pay telephones, at least one public pay telephone in each such bank shall be equipped with a shelf and outlet in compliance with 4.31.9(2).

EXCEPTION: This requirement does not apply to the secured areas of detention or correctional facilities where shelves and outlets are prohibited for purposes of security or safety.

(18) If fixed or built-in seating or tables (including, but not limited to, study carrels and student laboratory stations), are provided in accessible public or common use areas, at least five percent, but not less than one, of the fixed or built-in seating areas or tables shall comply with 4.32. An accessible route shall lead to and through such fixed or built-in seating areas, or tables.

(19) Assembly Areas.

(a)* In places of assembly with fixed seating, accessible wheelchair locations shall comply with 4.33.2, 4.33.3, and 4.33.4 and shall be provided consistent with the following table:

Capacity of Seating in Assembly Areas	Number of Required Wheelchair Locations
4 to 25	1
26 to 50	2
51 to 300	4
301 to 500	6
over 500	6, plus 1 additional space for each total seating capacity increase of 100

In addition, one percent, but not less than one, of all fixed seats shall be aisle seats with no armrests on the aisle side, or removable or folding armrests on the aisle side. Each such seat shall be identified by a sign or marker. Signage notifying patrons of the availability of such seats shall be posted at the ticket office. Aisle seats are not required to comply with 4.33.4.

(b) This paragraph applies to assembly areas where audible communications are integral to the use of the space (e.g., concert and lecture halls, playhouses and movie theaters, meeting rooms, etc.). Such assembly areas, if (1) they accommodate at least 50 persons, or if they have audio-amplification systems, and (2) they have fixed seating, shall have a permanently installed assistive listening system complying with 4.33. For other assembly areas, a permanently installed assistive listening system, or an adequate number of electrical outlets or other supplementary wiring necessary to support a portable assistive listening system shall be provided. The minimum number of receivers to be provided shall be equal to four percent of the total number of seats, but in no case less than two. Signage complying with applicable provisions of 4.30 shall be installed to notify patrons of the availability of a listening system.

(20) Where automated teller machines are provided, each machine shall comply with the requirements of 4.34 except where two or more machines are provided at a location, then only one must comply.

EXCEPTION: Drive-up-only automated teller machines are not required to comply with 4.34.2 and 4.34.3.

(21) Where dressing and fitting rooms are provided for use by the general public, patients, customers or employees, five percent of dressing rooms, but never less than one, for each type of use in each cluster of dressing rooms shall be accessible and shall comply with 4.35.

Examples of types of dressing rooms are those serving different genders or distinct and different functions as in different treatment or examination facilities.

4.1.4 (Reserved).

4.1.5 Accessible Buildings: Additions. Each addition to an existing building or facility shall be regarded as an alteration. Each space or element added to the existing building or facility shall comply with the applicable provisions of 4.1.1 to 4.1.3, Minimum Requirements (for New Construction) and the applicable technical specifications of section 4 and the special application sections. Each addition that affects or could affect the usability of an area containing a primary function shall comply with 4.1.6(2).

4.1.6 Accessible Buildings: Alterations

4.1.6 Accessible Buildings: Alterations.

(1) General. Alterations to existing buildings and facilities shall comply with the following:

(a) No alteration shall be undertaken which decreases or has the effect of decreasing accessibility or usability of a building or facility below the requirements for new construction at the time of alteration.

(b) If existing elements, spaces, or common areas are altered, then each such altered element, space, feature, or area shall comply with the applicable provisions of 4.1.1 to 4.1.3 Minimum Requirements (for New Construction). If the applicable provision for new construction requires that an element, space, or common area be on an accessible route, the altered element, space, or common area is not required to be on an accessible route except as provided in 4.1.6(2) (Alterations to an Area Containing a Primary Function).

(c) If alterations of single elements, when considered together, amount to an alteration of a room or space in a building or facility, the entire space shall be made accessible.

(d) No alteration of an existing element, space, or area of a building or facility shall impose a requirement for greater accessibility than that which would be required for new construction. For example, if the elevators and stairs in a building are being altered and the elevators are, in turn, being made accessible, then no accessibility modifications are required to the stairs connecting levels connected by the elevator. If stair modifications to correct unsafe conditions are required by other codes, the modifications shall be done in compliance with these guidelines unless technically infeasible.

(e) At least one interior public text telephone (TTY) complying with 4.31.9 shall be provided if:

(i) alterations to existing buildings or facilities with less than four exterior or interior public pay telephones would increase the total number to four or more telephones with at least one in an interior location; or

(ii) alterations to one or more exterior or interior public pay telephones occur in an existing building or facility with four or more public telephones with at least one in an interior location.

(f) If an escalator or stair is planned or installed where none existed previously and major structural modifications are necessary for such installation, then a means of accessible vertical access shall be provided that complies with the applicable provisions of 4.7, 4.8, 4.10, or 4.11.

(g) In alterations, the requirements of 4.1.3(9), 4.3.10 and 4.3.11 do not apply.

(h)* Entrances. If a planned alteration entails alterations to an entrance, and the building has an accessible entrance, the entrance being altered is not required to comply with 4.1.3(8), except to the extent required by 4.1.6(2). If a particular entrance is not made accessible, appropriate accessible signage indicating the location of the nearest accessible entrance(s) shall be installed at or near the inaccessible entrance, such that a person with disabilities will not be required to retrace the approach route from the inaccessible entrance.

(i) If the alteration work is limited solely to the electrical, mechanical, or plumbing system, or to hazardous material abatement, or automatic sprinkler retrofitting, and does not involve the alteration of any elements or spaces required to be accessible under these guidelines, then 4.1.6(2) does not apply.

(j) EXCEPTION: In alteration work, if compliance with 4.1.6 is technically infeasible, the alteration shall provide accessibility to the maximum extent feasible. Any elements or features of the building or facility that are being altered and can be made accessible shall be made accessible within the scope of the alteration.

Technically Infeasible. Means, with respect to an alteration of a building or a facility, that it has little likelihood of being accomplished because existing structural conditions would require removing or altering a load-bearing member which is an essential part of the structural frame; or because other

existing physical or site constraints prohibit modification or addition of elements, spaces, or features which are in full and strict compliance with the minimum requirements for new construction and which are necessary to provide accessibility.

(k) EXCEPTION:

(i) These guidelines do not require the installation of an elevator in an altered facility that is exempt from the requirement for an elevator under 4.1.3(5).

(ii) The exemption provided in paragraph (i) does not obviate or limit in any way the obligation to comply with the other accessibility requirements established in these guidelines. For example, alterations to floors above or below the ground floor must be accessible regardless of whether the altered facility has an elevator. If a facility subject to the elevator exemption set forth in paragraph (i) nonetheless has a passenger elevator, that elevator shall meet, to the maximum extent feasible, the accessibility requirements of these guidelines.

(2) Alterations to an Area Containing a Primary Function. In addition to the requirements of 4.1.6(1), an alteration that affects or could affect the usability of or access to an area containing a primary function shall be made so as to ensure that, to the maximum extent feasible, the path of travel to the altered area and the restrooms, telephones, and drinking fountains serving the altered area, are readily accessible to and usable by individuals with disabilities, unless such alterations are disproportionate to the overall alterations in terms of cost and scope (as determined under criteria established by the Attorney General).

(3) Special Technical Provisions for Alterations to Existing Buildings and Facilities.

(a) Ramps. Curb ramps and interior or exterior ramps to be constructed on sites or in existing buildings or facilities where space limitations prohibit the use of a 1:12 slope or less may have slopes and rises as follows:

(i) A slope between 1:10 and 1:12 is allowed for a maximum rise of 6 in (152 mm).

(ii) A slope between 1:8 and 1:10 is allowed for a maximum rise of 3 in (76 mm). A slope steeper than 1:8 is not allowed.

(b) Stairs. Full extension of handrails at stairs shall not be required in alterations where such extensions would be hazardous or impossible due to plan configuration.

(c) Elevators.

(i) If safety door edges are provided in existing automatic elevators, automatic door reopening devices may be omitted (see 4.10.6).

(ii) Where existing shaft configuration or technical infeasibility prohibits strict compliance with 4.10.9, the minimum car plan dimensions may be reduced by the minimum amount necessary, but in no case shall the inside car area be smaller than 48 in by 48 in (1220 mm by 1220 mm).

(iii) Equivalent facilitation may be provided with an elevator car of different dimensions when usability can be demonstrated and when all other elements required to be accessible comply with the applicable provisions of 4.10. For example, an elevator of 47 in by 69 in (1195 mm by 1755 mm) with a door opening on the narrow dimension, could accommodate the standard wheelchair clearances shown in Fig. 4.

(d) Doors.

(i) Where it is technically infeasible to comply with clear opening width requirements of 4.13.5, a projection of 5/8 in (16 mm) maximum will be permitted for the latch side stop.

(ii) If existing thresholds are 3/4 in (20 mm) high or less, and have (or are modified to have) a beveled edge on each side, they may remain.

(e) Toilet Rooms.

(i) Where it is technically infeasible to comply with 4.22 or 4.23, the installation of at least one unisex toilet/bathroom per floor, located in the same area as existing toilet facilities, will be permitted in lieu of modifying existing toilet facilities to be accessible. Each unisex toilet room shall contain one water closet complying with 4.16 and one lavatory complying with 4.19, and the door shall have a privacy latch.

(ii) Where it is technically infeasible to install a required standard stall (Fig. 30(a)), or where other codes prohibit reduction of the fixture count (i.e., removal of a water closet in order to create a double-wide stall), either alternate stall (Fig. 30(b)) may be provided in lieu of the standard stall.

(iii) When existing toilet or bathing facilities are being altered and are not made accessible, signage complying with 4.30.1, 4.30.2, 4.30.3, 4.30.5, and 4.30.7 shall be provided indicating the location of the nearest accessible toilet or bathing facility within the facility.

(f) Assembly Areas.

(i) Where it is technically infeasible to disperse accessible seating throughout an altered assembly area, accessible seating areas may be clustered. Each accessible seating area shall have provisions for companion seating and shall be located on an accessible route that also serves as a means of emergency egress.

(ii) Where it is technically infeasible to alter all performing areas to be on an accessible route, at least one of each type of performing area shall be made accessible.

(g) Platform Lifts (Wheelchair Lifts). In alterations, platform lifts (wheelchair lifts) complying with 4.11 and applicable state or local codes may be used as part of an accessible route. The use of lifts is not limited to the five conditions in Exception 4 of 4.1.3(5).

(h) Dressing Rooms. In alterations where technical infeasibility can be demonstrated, one dressing room for each sex on each level shall be made accessible. Where only unisex dressing rooms are provided, accessible unisex dressing rooms may be used to fulfill this requirement.

4.1.7 Accessible Buildings: Historic Preservation.

(1)* Applicability.

(a) General Rule. Alterations to a qualified historic building or facility shall comply with 4.1.6 (Accessible Buildings: Alterations), the applicable technical specifications of section 4 and the applicable special application sections unless it is determined in accordance with the procedures in 4.1.7(2) that compliance with the requirements for accessible routes (exterior and interior), ramps, entrances, or toilets would threaten or destroy the historic significance of the building or facility in which case the alternative requirements in 4.1.7(3) may be used for the feature.

(b) Definition. A qualified historic building or facility is a building or facility that is:

(i) Listed in or eligible for listing in the National Register of Historic Places; or

(ii) Designated as historic under an appropriate State or local law.

(2) Procedures.

(a) Alterations to Qualified Historic Buildings and Facilities Subject to Section 106 of the National Historic Preservation Act.

(i) Section 106 Process. Section 106 of the National Historic Preservation Act (16 U.S.C. 470f) requires that a Federal agency with jurisdiction over a Federal, federally assisted, or federally licensed undertaking consider the effects of the agency's undertaking on buildings and facilities listed in or eligible for listing in the National Register of Historic Places and give the Advisory Council on Historic Preservation a reasonable opportunity to comment on the undertaking prior to approval of the undertaking.

(ii) ADA Application. Where alterations are undertaken to a qualified historic building or facility that is subject to section 106 of the National Historic Preservation Act, the Federal agency with jurisdiction over the undertaking shall follow the section 106 process. If the State Historic Preservation Officer or Advisory Council on Historic Preservation agrees that compliance with the requirements for accessible routes (exterior and interior), ramps, entrances, or toilets would threaten or destroy the historic significance of the building or facility, the alternative requirements in 4.1.7(3) may be used for the feature.

(b) Alterations to Qualified Historic Buildings and Facilities Not Subject to Section 106 of the National Historic Preservation Act. Where alterations are undertaken to a qualified historic building or facility that is not subject to section 106 of the National Historic

Preservation Act, if the entity undertaking the alterations believes that compliance with the requirements for accessible routes (exterior and interior), ramps, entrances, or toilets would threaten or destroy the historic significance of the building or facility and that the alternative requirements in 4.1.7(3) should be used for the feature, the entity should consult with the State Historic Preservation Officer. If the State Historic Preservation Officer agrees that compliance with the accessibility requirements for accessible routes (exterior and interior), ramps, entrances or toilets would threaten or destroy the historical significance of the building or facility, the alternative requirements in 4.1.7(3) may be used.

(c) Consultation With Interested Persons. Interested persons should be invited to participate in the consultation process, including State or local accessibility officials, individuals with disabilities, and organizations representing individuals with disabilities.

(d) Certified Local Government Historic Preservation Programs. Where the State Historic Preservation Officer has delegated the consultation responsibility for purposes of this section to a local government historic preservation program that has been certified in accordance with section 101(c) of the National Historic Preservation Act of 1966 (16 U.S.C. 470a (c)) and implementing regulations (36 CFR 61.5), the responsibility may be carried out by the appropriate local government body or official.

(3) Historic Preservation: Minimum Requirements.

(a) At least one accessible route complying with 4.3 from a site access point to an accessible entrance shall be provided.

EXCEPTION: A ramp with a slope no greater than 1:6 for a run not to exceed 2 ft (610 mm) may be used as part of an accessible route to an entrance.

(b) At least one accessible entrance complying with 4.14 which is used by the public shall be provided.

EXCEPTION: If it is determined that no entrance used by the public can comply with 4.14, then access at any entrance not used by the general public but open (unlocked) with directional signage at the primary entrance may be used. The accessible entrance shall also have a notification system. Where security is a problem, remote monitoring may be used.

(c) If toilets are provided, then at least one toilet facility complying with 4.22 and 4.1.6 shall be provided along an accessible route that complies with 4.3. Such toilet facility may be unisex in design.

(d) Accessible routes from an accessible entrance to all publicly used spaces on at least the level of the accessible entrance shall be provided. Access shall be provided to all levels of a building or facility in compliance with 4.1 whenever practical.

(e) Displays and written information, documents, etc., should be located where they can be seen by a seated person. Exhibits and signage displayed horizontally (e.g., open books), should be no higher than 44 in (1120 mm) above the floor surface.

NOTE: The technical provisions of sections 4.2 through 4.35 are the same as those of the American National Standard Institute's document A117.1-1980, except as noted in the text.

4.2 Space Allowance and Reach Ranges.

4.2.1* Wheelchair Passage Width. The minimum clear width for single wheelchair passage shall be 32 in (815 mm) at a point and 36 in (915 mm) continuously (see Fig. 1 and 24(e)).

4.2.2 Width for Wheelchair Passing. The minimum width for two wheelchairs to pass is 60 in (1525 mm) (see Fig. 2).

4.2.3* Wheelchair Turning Space. The space required for a wheelchair to make a 180-degree turn is a clear space of 60 in (1525 mm) diameter (see Fig. 3(a)) or a T-shaped space (see Fig. 3(b)).

4.2.4* Clear Floor or Ground Space for Wheelchairs

4.2.4* Clear Floor or Ground Space for Wheelchairs.

4.2.4.1 Size and Approach. The minimum clear floor or ground space required to accommodate a single, stationary wheelchair and occupant is 30 in by 48 in (760 mm by 1220 mm) (see Fig. 4(a)). The minimum clear floor or ground space for wheelchairs may be positioned for forward or parallel approach to an object (see Fig. 4(b) and (c)). Clear floor or ground space for wheelchairs may be part of the knee space required under some objects.

4.2.4.2 Relationship of Maneuvering Clearance to Wheelchair Spaces. One full unobstructed side of the clear floor or ground space for a wheelchair shall adjoin or overlap an accessible route or adjoin another wheelchair clear floor space. If a clear floor space is located in an alcove or otherwise confined on all or part of three sides, additional maneuvering clearances shall be provided as shown in Fig. 4(d) and (e).

4.2.4.3 Surfaces for Wheelchair Spaces. Clear floor or ground spaces for wheelchairs shall comply with 4.5.

4.2.5* Forward Reach. If the clear floor space only allows forward approach to an object, the maximum high forward reach allowed shall be 48 in (1220 mm) (see Fig. 5(a)). *The minimum low forward reach is 15 in (380 mm).* If the high forward reach is over an obstruction, reach and clearances shall be as shown in Fig. 5(b).

4.2.6* Side Reach. If the clear floor space allows parallel approach by a person in a wheelchair, the maximum high side reach allowed shall be 54 in (1370 mm) and the low side reach shall be no less than 9 in (230 mm) above the floor (Fig. 6(a) and (b)). If the side reach is over an obstruction, the reach and clearances shall be as shown in Fig. 6(c).

4.3 Accessible Route.

4.3.1* General. All walks, halls, corridors, aisles, *skywalks, tunnels,* and other spaces

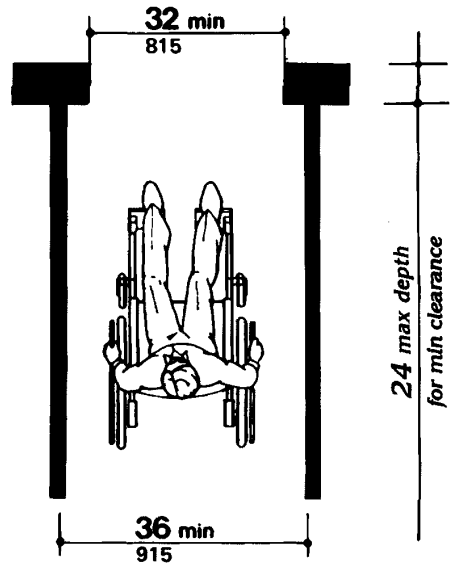

Fig. 1
Minimum Clear Width
for Single Wheelchair

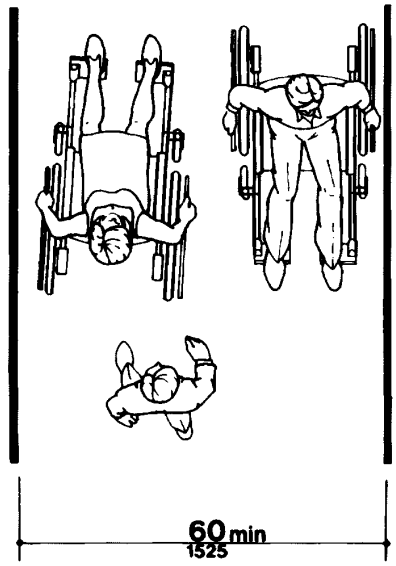

Fig. 2
Minimum Clear Width
for Two Wheelchairs

4.30 Signage

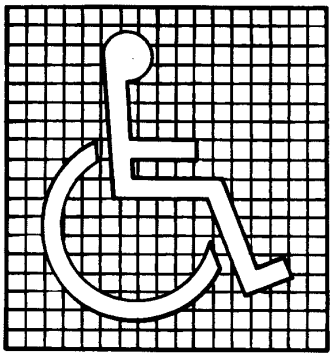

(a)
Proportions
International Symbol of Accessibility

(b)
Display Conditions
International Symbol of Accessibility

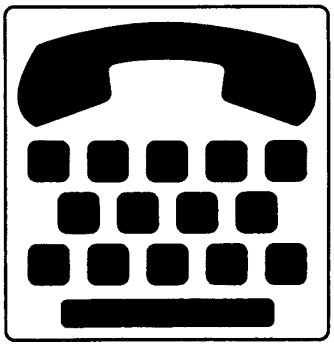

(c)
International TTY Symbol

(d)
International Symbol of Access for Hearing Loss

Fig. 43
International Symbols

symbol shall be displayed as shown in Fig. 43*(a) and (b).*

(2) Volume Control Telephones. Telephones required to have a volume control by 4.1.3(17)(b) shall be identified by a sign containing a depiction of a telephone handset with radiating sound waves.

(3) Text Telephones (TTYs). Text telephones (TTYs) required by 4.1.3 (17)(c) shall be identified by the international TTY symbol (Fig 43(c)). In addition, if a facility has a public text telephone (TTY), directional signage indicating the location of the nearest text telephone (TTY) shall be placed adjacent to all banks of telephones which do not contain a text telephone (TTY). Such directional signage shall include the international TTY symbol. If a facility has no banks of telephones, the directional signage shall be provided at the entrance (e.g., in a building directory).

(4) Assistive Listening Systems. In assembly areas where permanently installed assistive listening systems are required by 4.1.3(19)(b) the availability of such systems shall be identified with signage that includes the international symbol of access for hearing loss (Fig 43(d)).

4.30.8* Illumination Levels. *(Reserved).*

4.31 Telephones.

4.31.1 General. Public telephones *required to be accessible by 4.1* shall comply with 4.31.

4.31.2 Clear Floor or Ground Space. A clear floor or ground space at least 30 in by 48 in (760 mm by 1220 mm) that allows either a forward or parallel approach by a person using a wheelchair shall be provided at telephones (see Fig. 44). The clear floor or ground space shall comply with 4.2.4. Bases, enclosures, and fixed seats shall not impede approaches to telephones by people who use wheelchairs.

4.31.3* Mounting Height. The highest operable part of the telephone shall be within the reach ranges specified in 4.2.5 or 4.2.6.

4.31.4 ***Protruding Objects.*** *Telephones shall comply with 4.4.*

4.31.7 Telephone Books. Telephone books, if provided, shall be located *in a position that complies with the reach ranges specified in 4.2.5 and 4.2.6.*

4.31.8 Cord Length. The cord from the telephone to the handset shall be at least 29 in (735 mm) long.

4.31.9* Text Telephones (TTY) Required by 4.1.

(1) Text telephones (TTYs) used with a pay telephone shall be permanently affixed within, or adjacent to, the telephone enclosure. If an acoustic coupler is used, the telephone cord shall be sufficiently long to allow connection of the text telephone (TTY) and the telephone receiver.

(2) Pay telephones designed to accommodate a portable text telephone (TTY) shall be equipped with a shelf and an electrical outlet within or adjacent to the telephone enclosure. The telephone handset shall be capable of being placed flush on the surface of the shelf. The shelf shall be capable of accommodating a text telephone (TTY) and shall have 6 in (152 mm) minimum vertical clearance in the area where the text telephone (TTY) is to be placed.

(3) Equivalent facilitation may be provided. For example, a portable text telephone (TTY) may be made available in a hotel at the registration desk if it is available on a 24-hour basis for use with nearby public pay telephones. In this instance, at least one pay telephone shall comply with paragraph 2 of this section. In addition, if an acoustic coupler is used, the telephone handset cord shall be sufficiently long so as to allow connection of the text telephone (TTY) and the telephone receiver. Directional signage shall be provided and shall comply with 4.30.7.

4.32 *Fixed or Built-in* Seating and Tables.

4.32.1 Minimum Number. Fixed or built-in seating or tables *required to be accessible by 4.1* shall comply with 4.32.

4.32.2 Seating. If seating spaces for people in wheelchairs are provided at *fixed* tables or counters, clear floor space complying with 4.2.4 shall be provided. Such clear floor space shall not overlap knee space by more than 19 in (485 mm) (see Fig. 45).

4.32.3 Knee Clearances. If seating for people in wheelchairs is provided at tables or counters, knee spaces at least 27 in (685 mm) high, 30 in (760 mm) wide, and 19 in (485 mm) deep shall be provided (see Fig. 45).

4.32.4* Height of Tables or Counters. The tops of *accessible* tables and *counters* shall be from 28 in to 34 in (710 mm to 865 mm) *above the finish* floor or ground.

4.33 Assembly Areas.

4.33.1 Minimum Number. Assembly *and associated* areas *required to be accessible by 4.1 shall comply with 4.33.*

4.33.2* Size of Wheelchair Locations. Each wheelchair location shall provide minimum clear ground or floor spaces as shown in Fig. 46.

4.33.3* Placement of Wheelchair Locations. Wheelchair areas shall be an integral part of any fixed seating plan and shall be *provided so as to provide people with physical disabilities a choice of admission prices and lines of sight comparable to those for members of the general public.* They shall adjoin an accessible route that also serves as a means of egress in case of emergency. *At least one companion fixed seat shall be provided next to each wheelchair seating area. When the seating capacity exceeds 300, wheelchair spaces shall be provided in more than one location. Readily removable seats may be installed in wheelchair spaces when the spaces are not required to accommodate wheelchair users.*

EXCEPTION: Accessible viewing positions may be clustered for bleachers, balconies, and other areas having sight lines that require slopes of greater than 5 percent. Equivalent accessible viewing positions may be located on levels having accessible egress.

4.33.4 Surfaces. The ground or floor at wheelchair locations shall be level and shall comply with 4.5.

5. RESTAURANTS AND CAFETERIAS.

5.1* General. Except as specified or modified in this section, restaurants and cafeterias shall comply with the requirements of section 4. Where fixed tables (or dining counters where food is consumed but there is no service) are provided, at least five percent, but not less than one, of the fixed tables (or a portion of the dining counter) shall be accessible and shall comply with 4.32 as required in 4.1.3(18). In establishments where separate areas are designated for smoking and non-smoking patrons, the required number of accessible fixed tables (or counters) shall be proportionally distributed between the smoking and non-smoking areas. In new construction, and where practicable in alterations, accessible fixed tables (or counters) shall be distributed throughout the space or facility.

5.2 Counters and Bars. Where food or drink is served at counters exceeding 34 in (865 mm) in height for consumption by customers seated on stools or standing at the counter, a portion of the main counter which is 60 in (1525 mm) in length minimum shall be provided in compliance with 4.32 or service shall be available at accessible tables within the same area.

5.3 Access Aisles. All accessible fixed tables shall be accessible by means of an access aisle at least 36 in (915 mm) clear between parallel edges of tables or between a wall and the table edges.

5.4 Dining Areas. In new construction, all dining areas, including raised or sunken dining areas, loggias, and outdoor seating areas, shall be accessible. In non-elevator buildings, an accessible means of vertical access to the mezzanine is not required under the following conditions: 1) the area of mezzanine seating measures no more than 33 percent of the area of the total accessible seating area; 2) the same services and decor are provided in an accessible space usable by the general public; and, 3) the accessible areas are not restricted to use by people with disabilities. In alterations, accessibility to raised or sunken dining areas, or to all parts of outdoor seating areas is not required provided that the same services and decor are provided in an accessible space usable by the general public and are not restricted to use by people with disabilities.

5.5 Food Service Lines. Food service lines shall have a minimum clear width of 36 in (915 mm), with a preferred clear width of 42 in (1065 mm) to allow passage around a person using a wheelchair. Tray slides shall be mounted no higher than 34 in (865 mm) above the floor (see Fig. 53). If self-service shelves are provided, at least 50 percent of each type must be within reach ranges specified in 4.2.5 and 4.2.6.

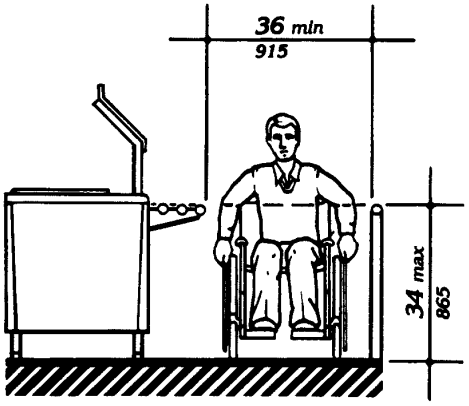

Fig. 53
Food Service Lines

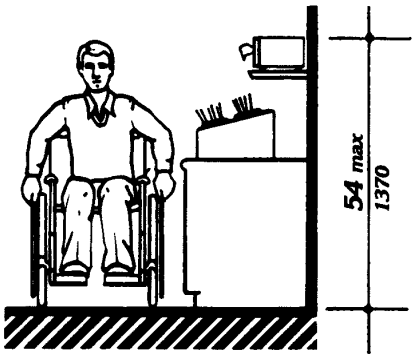

Fig. 54
Tableware Areas

6.0 Medical Care Facilities

5.6 Tableware and Condiment Areas. Self-service shelves and dispensing devices for tableware, dishware, condiments, food and beverages shall be installed to comply with 4.2 (see Fig. 54).

5.7 Raised Platforms. In banquet rooms or spaces where a head table or speaker's lectern is located on a raised platform, the platform shall be accessible in compliance with 4.8 or 4.11. Open edges of a raised platform shall be protected by placement of tables or by a curb.

5.8 Vending Machines and Other Equipment. Spaces for vending machines and other equipment shall comply with 4.2 and shall be located on an accessible route.

5.9 Quiet Areas. (Reserved).

6. MEDICAL CARE FACILITIES.

6.1 General. Medical care facilities included in this section are those in which people receive physical or medical treatment or care and where persons may need assistance in responding to an emergency and where the period of stay may exceed 24 hours. In addition to the requirements of section 4, medical care facilities and buildings shall comply with 6.

(1) Hospitals - general purpose hospitals, psychiatric facilities, detoxification facilities — At least 10 percent of patient bedrooms and toilets, and all public use and common use areas are required to be designed and constructed to be accessible.

(2) Hospitals and rehabilitation facilities that specialize in treating conditions that affect mobility, or units within either that specialize in treating conditions that affect mobility — All patient bedrooms and toilets, and all public use and common use areas are required to be designed and constructed to be accessible.

(3) Long term care facilities, nursing homes — At least 50 percent of patient bedrooms and toilets, and all public use and common use areas are required to be designed and constructed to be accessible.

(4) Alterations to patient bedrooms.

(a) When patient bedrooms are being added or altered as part of a planned renovation of an entire wing, a department, or other discrete area of an existing medical facility, a percentage of the patient bedrooms that are being added or altered shall comply with 6.3. The percentage of accessible rooms provided shall be consistent with the percentage of rooms required to be accessible by the applicable requirements of 6.1(1), 6.1(2), or 6.1(3), until the number of accessible patient bedrooms in the facility equals the overall number that would be required if the facility were newly constructed. (For example, if 20 patient bedrooms are being altered in the obstetrics department of a hospital, 2 of the altered rooms must be made accessible. If, within the same hospital, 20 patient bedrooms are being altered in a unit that specializes in treating mobility impairments, all of the altered rooms must be made accessible.) Where toilet/bath rooms are part of patient bedrooms which are added or altered and required to be accessible, each such patient toilet/bathroom shall comply with 6.4.

(b) When patient bedrooms are being added or altered individually, and not as part of an alteration of the entire area, the altered patient bedrooms shall comply with 6.3, unless either: a) the number of accessible rooms provided in the department or area containing the altered patient bedroom equals the number of accessible patient bedrooms that would be required if the percentage requirements of 6.1(1), 6.1(2), or 6.1(3) were applied to that department or area; or b) the number of accessible patient bedrooms in the facility equals the overall number that would be required if the facility were newly constructed. Where toilet/bathrooms are part of patient bedrooms which are added or altered and required to be accessible, each such toilet/bathroom shall comply with 6.4.

6.2 Entrances. At least one accessible entrance that complies with 4.14 shall be protected from the weather by canopy or roof overhang. Such entrances shall incorporate a passenger loading zone that complies with 4.6.6.

6.3 Patient Bedrooms. Provide accessible patient bedrooms in compliance with section 4. Accessible patient bedrooms shall comply with the following:

(1) Each bedroom shall have a door that complies with 4.13.

EXCEPTION: Entry doors to acute care hospital bedrooms for in-patients shall be exempted from the requirement in 4.13.6 for maneuvering space at the latch side of the door if the door is at least 44 in (1120 mm) wide.

(2) Each bedroom shall have adequate space to provide a maneuvering space that complies with 4.2.3. In rooms with two beds, it is preferable that this space be located between beds.

(3) Each bedroom shall have adequate space to provide a minimum clear floor space of 36 in (915 mm) along each side of the bed and to provide an accessible route complying with 4.3.3 to each side of each bed.

6.4 Patient Toilet Rooms. Where toilet/bathrooms are provided as a part of a patient bedroom, each patient bedroom that is required to be accessible shall have an accessible toilet/bathroom that complies with 4.22 or 4.23 and shall be on an accessible route.

7. BUSINESS, MERCANTILE AND CIVIC.

7.1 General. In addition to the requirements of section 4, the design of all areas used for business transactions with the public shall comply with 7.

7.2 Sales and Service Counters, Teller Windows, Information Counters.

(1) In areas used for transactions where counters have cash registers and are provided for sales or distribution of goods or services to the public, at least one of each type shall have a portion of the counter which is at least 36 in (915 mm) in length with a maximum height of 36 in (915 mm) above the finish floor. It shall be on an accessible route complying with 4.3. Such counters shall include, but are not limited to, counters in retail stores, and distribution centers. The accessible counters must be dispersed throughout the building or facility. In alterations where it is technically infeasible to provide an accessible counter, an auxiliary counter meeting these requirements may be provided.

(2) In areas used for transactions that may not have a cash register but at which goods or services are sold or distributed including, but not limited to, ticketing counters, teller stations, registration counters in transient lodging facilities, information counters, box office counters and library check-out areas, either:

(i) a portion of the main counter which is a minimum of 36 in (915 mm) in length shall be provided with a maximum height of 36 in (915 mm); or

(ii) an auxiliary counter with a maximum height of 36 in (915 mm) in close proximity to the main counter shall be provided; or

(iii) equivalent facilitation shall be provided (e.g., at a hotel registration counter, equivalent facilitation might consist of: (1) provision of a folding shelf attached to the main counter on which an individual with a disability can write, and (2) use of the space on the side of the counter or at the concierge desk, for handing materials back and forth).

All accessible sales and service counters shall be on an accessible route complying with 4.3.

(3) * In public facilities where counters or teller windows have solid partitions or security glazing to separate personnel from the public, at least one of each type shall provide a method to facilitate voice communication. Such methods may include, but are not limited to, grilles, slats, talk-through baffles, intercoms, or telephone handset devices. The method of communication shall be accessible to both individuals who use wheelchairs and individuals who have difficulty bending or stooping. If provided for public use, at least one telephone communication device shall be equipped with volume controls complying with 4.31.5. Hand-operable communications devices, if provided, shall comply with 4.27.

(4) * Assistive Listening Systems. (Reserved).

7.3* Check-out Aisles.

(1) In new construction, accessible check-out aisles shall be provided in conformance with the table below:

Total Check-out Aisles of Each Design	Minimum Number of Accessible Check-out Aisles (of Each Design)
1 - 4	1
5 - 8	2
9 - 15	3
over 15	3, plus 20% of additonal aisles

EXCEPTION: In new construction, where the selling space is under 5000 square feet, only one check-out aisle is required to be accessible.

EXCEPTION: In alterations, at least one check-out aisle shall be accessible in facilities under 5000 square feet of selling space. In facilities of 5000 or more square feet of selling space, at least one of each design of check-out aisle shall be made accessible when altered until the number of accessible check-out aisles of each design equals the number required in new construction.

Examples of check-out aisles of different "design" include those which are specifically designed to serve different functions. Different "design" includes but is not limited to the following features - length of belt or no belt; or permanent signage designating the aisle as an express lane.

(2) Clear aisle width for accessible check-out aisles shall comply with 4.2.1 and maximum adjoining counter height shall not exceed 38 in (965 mm) above the finish floor. The top of the lip shall not exceed 40 in (1015 mm) above the finish floor.

(3) Signage identifying accessible check-out aisles shall comply with 4.30.7 and shall be mounted above the check-out aisle in the same location where the check-out number or type of check-out is displayed.

7.4 Security Bollards. Any device used to prevent the removal of shopping carts from store premises shall not prevent access or egress to people in wheelchairs. An alternate entry that is equally convenient to that provided for the ambulatory population is acceptable.

8. LIBRARIES.

8.1 General. In addition to the requirements of section 4, the design of all public areas of a library shall comply with 8, including reading and study areas, stacks, reference rooms, reserve areas, and special facilities or collections.

8.2 Reading and Study Areas. At least 5 percent or a minimum of one of each element of fixed seating, tables, or study carrels shall comply with 4.2 and 4.32. Clearances between fixed accessible tables and between study carrels shall comply with 4.3.

8.3 Check-Out Areas. At least one lane at each check-out area shall comply with 7.2(1). Any traffic control or book security gates or turnstiles shall comply with 4.13.

8.4 Card Catalogs and Magazine Displays. Minimum clear aisle space at card catalogs and magazine displays shall comply with Fig. 55. Maximum reach height shall comply with 4.2, with a height of 48 in (1220 mm) preferred irrespective of approach allowed.

8.5 Stacks. Minimum clear aisle width between stacks shall comply with 4.3, with a minimum clear aisle width of 42 in (1065 mm) preferred where possible. Shelf height in stack areas is unrestricted (see Fig. 56).

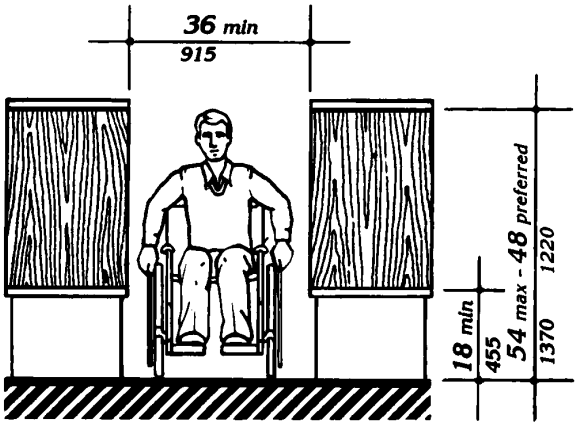

Fig. 55
Card Catalog

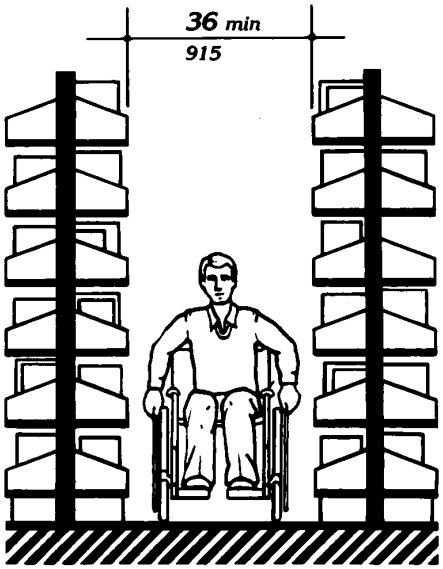

Fig. 56
Stacks

9. ACCESSIBLE TRANSIENT LODGING.

(1) Except as specified in the special technical provisions of this section, accessible transient lodging shall comply with the applicable requirements of section 4. Transient lodging includes facilities or portions thereof used for sleeping accommodations when not classed as a medical care facility.

9.1 Hotels, Motels, Inns, Boarding Houses, Dormitories, Resorts and Other Similar Places of Transient Lodging.

9.1.1 General. All public use and common use areas are required to be designed and constructed to comply with section 4 (Accessible Elements and Spaces: Scope and Technical Requirements).

EXCEPTION: Sections 9.1 through 9.4 do not apply to an establishment located within a building that contains not more than five rooms for rent or hire and that is actually occupied by the proprietor of such establishment as the residence of such proprietor.

9.1.2 Accessible Units, Sleeping Rooms, and Suites. Accessible sleeping rooms or suites that comply with the requirements of 9.2 (Requirements for Accessible Units, Sleeping Rooms, and Suites) shall be provided in conformance with the table below. In addition, in hotels, of 50 or more sleeping rooms or suites, additional accessible sleeping rooms or suites that include a roll-in shower shall also be provided in conformance with the table below. Such accommodations shall comply with the requirements of 9.2, 4.21, and Figure 57(a) or (b).

(a) at least one public entrance shall allow a person with mobility impairments to approach, enter and exit including a minimum clear door width of 32 in (815 mm).

(b) sleeping space for homeless persons as provided in the scoping provisions of 9.1.2 shall include doors to the sleeping area with a minimum clear width of 32 in (815 mm) and maneuvering space around the beds for persons with mobility impairments complying with 9.2.2(1).

(c) at least one toilet room for each gender or one unisex toilet room shall have a minimum clear door width of 32 in (815 mm), minimum turning space complying with 4.2.3, one water closet complying with 4.16, one lavatory complying with 4.19 and the door shall have a privacy latch; and, if provided, at least one tub or shower shall comply with 4.20 or 4.21, respectively.

(d) at least one common area which a person with mobility impairments can approach, enter and exit including a minimum clear door width of 32 in (815 mm).

(e) at least one route connecting elements (a), (b), (c) and (d) which a person with mobility impairments can use including minimum clear width of 36 in (915 mm), passing space complying with 4.3.4, turning space complying with 4.2.3 and changes in levels complying with 4.3.8.

(f) homeless shelters can comply with the provisions of (a)-(e)by providing the above elements on one accessible floor.

9.5.3 Accessible Sleeping Accommodations in New Construction. Accessible sleeping rooms shall be provided in conformance with the table in 9.1.2 and shall comply with 9.2 Accessible Units, Sleeping Rooms and Suites (where the items are provided). Additional sleeping rooms that comply with 9.3 Sleeping Accommodations for Persons with Hearing Impairments shall be provided in conformance with the table provided in 9.1.3.

In facilities with multi-bed rooms or spaces, a percentage of the beds equal to the table provided in 9.1.2 shall comply with 9.2.2(1).

10. TRANSPORTATION FACILITIES.

10.1 General. Every station, bus stop, bus stop pad, terminal, building or other transportation facility, shall comply with the applicable provisions of section 4, the special application sections, and the applicable provisions of this section.

10.2 Bus Stops and Terminals.

10.2.1 New Construction.

(1) Where new bus stop pads are constructed at bus stops, bays or other areas where a lift or ramp is to be deployed, they shall have a firm, stable surface; a minimum clear length of 96 inches (measured from the curb or vehicle roadway edge) and a minimum clear width of 60 inches (measured parallel to the vehicle roadway) to the maximum extent allowed by legal or site constraints; and shall be connected to streets, sidewalks or pedestrian paths by an accessible route complying with 4.3 and 4.4. The slope of the pad parallel to the roadway shall, to the extent practicable, be the same as the roadway. For water drainage, a maximum slope of 1:50 (2%) perpendicular to the roadway is allowed.

(2) Where provided, new or replaced bus shelters shall be installed or positioned so as to permit a wheelchair or mobility aid user to enter from the public way and to reach a location, having a minimum clear floor area of 30 inches by 48 inches, entirely within the perimeter of the shelter. Such shelters shall be connected by an accessible route to the boarding area provided under paragraph (1) of this section.

(3) Where provided, all new bus route identification signs shall comply with 4.30.5. In addition, to the maximum extent practicable, all new bus route identification signs shall comply with 4.30.2 and 4.30.3. Signs

(5) New direct connections to commercial, retail, or residential facilities shall, to the maximum extent feasible, have an accessible route complying with 4.3 from the point of connection to boarding platforms and all transportation system elements used by the public. Any elements provided to facilitate future direct connections shall be on an accessible route connecting boarding platforms and all transportation system elements used by the public.

10.3.3 Existing Facilities: Alterations.

(1) For the purpose of complying with 4.1.6(2) (Alterations to an Area Containing a Primary Function), an area of primary function shall be as defined by applicable provisions of 49 CFR 37.43(c) (Department of Transportation's ADA Rule) or 28 CFR 36.403 (Department of Justice's ADA Rule).

10.4 Airports.

10.4.1 New Construction.

(1) Elements such as ramps, elevators or other vertical circulation devices, ticketing areas, security checkpoints, or passenger waiting areas shall be placed to minimize the distance which wheelchair users and other persons who cannot negotiate steps may have to travel compared to the general public.

(2) The circulation path, including an accessible entrance and an accessible route, for persons with disabilities shall, to the maximum extent practicable, coincide with the circulation path for the general public. Where the circulation path is different, directional signage complying with 4.30.1, 4.30.2, 4.30.3 and 4.30.5 shall be provided which indicates the location of the nearest accessible entrance and its accessible route.

(3) Ticketing areas shall permit persons with disabilities to obtain a ticket and check baggage and shall comply with 7.2.

(4) Where public pay telephones are provided, and at least one is at an interior location, a public text telephone (TTY) shall be provided in compliance with 4.31.9. Additionally, if four or more public pay telephones are located in any of the following locations, at least one public text telephone (TTY) shall also be provided in that location:

(a) a main terminal outside the security areas;

(b) a concourse within the security areas; or

(c) a baggage claim area in a terminal.

Compliance with this section constitutes compliance with section 4.1.3(17)(c).

(5) Baggage check-in and retrieval systems shall be on an accessible route complying with 4.3, and shall have space immediately adjacent complying with 4.2.4. If unattended security barriers are provided, at least one gate shall comply with 4.13. Gates which must be pushed open by wheelchair or mobility aid users shall have a smooth continuous surface extending from 2 in (50 mm) above the floor to 27 in (685 mm) above the floor.

(6) Terminal information systems which broadcast information to the general public through a public address system shall provide a means to provide the same or equivalent information to persons with a hearing loss or who are deaf. Such methods may include, but are not limited to, visual paging systems using video monitors and computer technology. For persons with certain types of hearing loss such methods may include, but are not limited to, an assistive listening system complying with 4.33.7.

(7) Where clocks are provided for use by the general public the clock face shall be uncluttered so that its elements are clearly visible. Hands, numerals, and/or digits shall contrast with their background either light-on-dark or dark-on-light. Where clocks are mounted overhead, numerals and/or digits shall comply with 4.30.3. Clocks shall be placed in uniform locations throughout the facility to the maximum extent practicable.

(8)* Security Systems. In public facilities that are airports, at least one accessible route complying with 4.3 shall be provided through fixed security barriers at each single barrier or group of security barriers. A group is two or more security barriers immediately adjacent to each other at a single location. Where security barriers incorporate equipment such as metal detectors, fluoroscopes, or other similar devices which cannot be made accessible, an

accessible route shall be provided adjacent to such security screening devices to facilitate an equivalent circulation path. The circulation path shall permit persons with disabilities passing through security barriers to maintain visual contact with their personal items to the same extent provided other members of the general public.

EXCEPTION: Doors, doorways, and gates designed to be operated only by security personnel shall be exempt from 4.13.9, 4.13.11, and 4.13.12.

10.5 Boat and Ferry Docks. (Reserved).

11. JUDICIAL, LEGISLATIVE AND REGULATORY FACILITIES.

11.1 General. In addition to the requirements in section 4 and 11.1, judicial facilities shall comply with 11.2 and legislative and regulatory facilities shall comply with 11.3.

11.1.1 Entrances. Where provided, at least one restricted entrance and one secured entrance to the facility shall be accessible in addition to the entrances required to be accessible by 4.1.3(8). Restricted entrances are those entrances used only by judges, public officials, facility personnel or other authorized parties on a controlled basis. Secured entrances are those entrances to judicial facilities used only by detainees and detention officers.

EXCEPTION: At secured entrances, doors and doorways operated only by security personnel shall be exempt from 4.13.9, 4.13.10, 4.13.11 and 4.13.12.

11.1.2 Security Systems. An accessible route complying with 4.3 shall be provided through fixed security barriers at required accessible entrances. Where security barriers incorporate equipment such as metal detectors, fluoroscopes, or other similar devices which cannot be made accessible, an accessible route shall be provided adjacent to such security screening devices to facilitate an equivalent circulation path.

11.1.3* Two-Way Communication Systems. Where a two-way communication system is provided to gain admittance to a facility or to restricted areas within the facility, the system shall provide both visual and audible signals and shall comply with 4.27.

11.2 Judicial Facilities.

11.2.1 Courtrooms.

(1) Where provided, the following elements and spaces shall be on an accessible route complying with 4.3. Areas that are raised or depressed and accessed by ramps or platform lifts with entry ramps shall provide unobstructed turning space complying with 4.2.3.

EXCEPTION: Vertical access to raised judges' benches or courtroom stations need not be installed provided that the requisite areas, maneuvering spaces, and, if appropriate, electrical service are installed at the time of initial construction to allow future installation of a means of vertical access complying with 4.8, 4.10, or 4.11 without requiring substantial reconstruction of the space.

(a) Spectator, Press, and Other Areas with Fixed Seats. Where spectator, press or other areas with fixed seats are provided, each type of seating area shall comply with 4.1.3(19)(a).

(b) Jury Boxes and Witness Stands. Each jury box and witness stand shall have within its defined area clear floor space complying with 4.2.4.

EXCEPTION: In alterations, accessible wheelchair spaces are not required to be located within the defined area of raised jury boxes or witness stands and may be located outside these spaces where ramp or lift access poses a hazard by restricting or projecting into a means of egress required by the appropriate administrative authority.

(c) Judges' Benches and Courtroom Stations. Judges' benches, clerks' stations, bailiffs' stations, deputy clerks' stations, court reporters' stations and litigants' and counsel stations shall comply with 4.32.

(2)* Permanently installed assistive listening systems complying with 4.33 shall be provided in each courtroom. The minimum number of receivers shall be four percent of the room

occupant load, as determined by applicable State or local codes, but not less than two receivers. An informational sign indicating the availability of an assistive listening system and complying with 4.30.1, 4.30.2, 4.30.3, 4.30.5, and 4.30.7(4) shall be posted in a prominent place.

11.2.2 Jury Assembly Areas and Jury Deliberation Areas. Where provided in areas used for jury assembly or deliberation, the following elements or spaces shall be on an accessible route complying with 4.3 and shall comply with the following provisions:

(1) Refreshment Areas. Refreshment areas, kitchenettes and fixed or built-in refreshment dispensers shall comply with the technical provisions of 9.2.2(7).

(2) Drinking Fountains. Where provided in rooms covered under 11.2.2, there shall be a drinking fountain in each room complying with 4.15.

11.2.3 Courthouse Holding Facilities.

(1) Holding Cells - Minimum Number. Where provided, facilities for detainees, including central holding cells and court-floor holding cells, shall comply with the following:

(a) Central Holding Cells. Where separate central holding cells are provided for adult male, juvenile male, adult female, or juvenile female, one of each type shall comply with 11.2.3(2). Where central-holding cells are provided, which are not separated by age or sex, at least one cell complying with 11.2.3(2) shall be provided.

(b) Court-Floor Holding Cells. Where separate court-floor holding cells are provided for adult male, juvenile male, adult female, or juvenile female, each courtroom shall be served by one cell of each type complying with 11.2.3(2). Where court-floor holding cells are provided, which are not separated by age or sex, courtrooms shall be served by at least one cell complying with 11.2.3(2). Cells may serve more than one courtroom.

(2) Requirements for Accessible Cells. Accessible cells shall be on an accessible route complying with 4.3. Where provided, the following elements or spaces serving accessible cells shall be accessible and on an accessible route:

(a) Doors and Doorways. All doors and doorways to accessible spaces and on an accessible route shall comply with 4.13.

EXCEPTION: Doors and doorways operated only by security personnel shall be exempt from 4.13.9, 4.13.10, 4.13.11 and 4.13.12.

(b)* Toilet and Bathing Facilities. Toilet facilities shall comply with 4.22 and bathing facilities shall comply with 4.23. Privacy screens shall not intrude on the clear floor space required for fixtures or the accessible route.

(c)* Beds. Beds shall have maneuvering space at least 36 in (915 mm) wide along one side. Where more than one bed is provided in a cell, the maneuvering space provided at adjacent beds may overlap.

(d) Drinking Fountains and Water Coolers. Drinking fountains shall be accessible to individuals who use wheelchairs in accordance with 4.15 and shall be accessible to those who have difficulty bending or stooping. This can be accomplished by the use of a "hi-lo" fountain; by providing one fountain accessible to those who use wheelchairs and one fountain at a standard height convenient for those who have difficulty bending; by providing a fountain accessible under 4.15 and a water cooler; or by other such means as would achieve the required accessibility for each group.

(e) Fixed or Built-in Seating and Tables. Fixed or built-in seating, tables or counters shall comply with 4.32.

(f) Fixed Benches. Fixed benches shall be mounted at 17 in to 19 in (430 mm to 485 mm) above the finish floor and provide back support (e.g., attachment to wall). The structural strength of the bench attachments shall comply with 4.26.3.

(3)* Visiting Areas. The following elements, where provided, shall be located on an accessible route complying with 4.3 and shall comply with the following provisions:

(a) Cubicles and Counters. Five percent, but not less than one, of fixed cubicles shall comply with 4.32 on both the visitor and detainee sides. Where counters are provided, a portion at least 36 in (915 mm) in length shall comply with 4.32 on both the visitor and detainee sides.

(b) Partitions. Solid partitions or security glazing that separate visitors from detainees shall comply with 7.2(3).

11.3* Legislative and Regulatory Facilities. Assembly areas designated for public use, including public meeting rooms, hearing rooms, and chambers shall comply with 11.3.

11.3.1 Where provided, the following elements and spaces shall be on an accessible route complying with 4.3. Areas that are raised or depressed and accessed by ramps or platform lifts with entry ramps shall provide unobstructed turning space complying with 4.2.3.

(1) Raised Speakers' Platforms. Where raised speakers' platforms are provided, at least one of each type shall be accessible.

(2)* Spectator, Press, and Other Areas with Fixed Seats. Where spectator, press or other areas with fixed seats are provided, each type of seating area shall comply with 4.1.3(19)(a).

11.3.2* Each assembly area provided with a permanently installed audio-amplification system shall have a permanently installed assistive listening system. The minimum number of receivers shall be four percent of the room occupant load, as determined by applicable State or local codes, but not less than two receivers. An informational sign indicating the availability of an assistive listening system and complying with 4.30.1, 4.30.2, 4.30.3, 4.30.5, and 4.30.7(4) shall be posted in a prominent place.

12. DETENTION AND CORRECTIONAL FACILITIES.

12.1* General. This section applies to jails, holding cells in police stations, prisons, juvenile detention centers, reformatories, and other institutional occupancies where occupants are under some degree of restraint or restriction for security reasons. Except as specified in this section, detention and correctional facilities shall comply with the applicable requirements of section 4. All common use areas serving accessible cells or rooms and all public use areas are required to be designed and constructed to comply with section 4.

EXCEPTIONS: Requirements for areas of rescue assistance in 4.1.3(9), 4.3.10, and 4.3.11 do not apply. Compliance with requirements for elevators in 4.1.3(5) and stairs 4.1.3(4) is not required in multi-story housing facilities where accessible cells or rooms, all common use areas serving them, and all public use areas are on an accessible route. Compliance with 4.1.3(16) is not required in areas other than public use areas.

12.2 Entrances and Security Systems.

12.2.1* Entrances. Entrances used by the public, including those that are secured, shall be accessible as required by 4.1.3(8).

EXCEPTION: Compliance with 4.13.9, 4.13.10, 4.13.11 and 4.13.12 is not required at entrances, doors, or doorways that are operated only by security personnel or where security requirements prohibit full compliance with these provisions.

12.2.2 Security Systems. Where security systems are provided at public or other entrances required to be accessible by 12.2.1 or 12.2.2, an accessible route complying with 4.3 shall be provided through fixed security barriers. Where security barriers incorporate equipment such as metal detectors, fluoroscopes, or other similar devices which cannot be made accessible, an accessible route shall be provided adjacent to such security screening devices to facilitate an equivalent circulation path.

12.3* Visiting Areas. In non-contact visiting areas where inmates or detainees are separated from visitors, the following elements, where provided, shall be accessible and located on an accessible route complying with 4.3:

(1) Cubicles and Counters. Five percent, but not less than one, of fixed cubicles shall comply with 4.32 on both the visitor and detainee or inmate sides. Where counters are provided, a portion at least 36 in (915 mm) in length shall comply with 4.32 on both the visitor and detainee or inmate sides.

EXCEPTION: At non-contact visiting areas not serving accessible cells or rooms, the requirements of 12.3(1) do not apply to the inmate or detainee side of cubicles or counters.

(2) Partitions. Solid partitions or security glazing separating visitors from inmates or detainees shall comply with 7.2(3).

12.4 Holding and Housing Cells or Rooms: Minimum Number.

12.4.1* Holding Cells and General Housing Cells or Rooms. At least two percent, but not less than one, of the total number of housing or holding cells or rooms provided in a facility shall comply with 12.5

12.4.2* Special Holding and Housing Cells or Rooms. In addition to the requirements of 12.4.1, where special holding or housing cells or rooms are provided, at least one serving each purpose shall comply with 12.5. An accessible special holding or housing cell or room may serve more than one purpose. Cells or rooms subject to this requirement include, but are not limited to, those used for purposes of orientation, protective custody, administrative or disciplinary detention or segregation, detoxification, and medical isolation.

EXCEPTION: Cells or rooms specially designed without protrusions and to be used solely for purposes of suicide prevention are exempt from the requirement for grab bars at water closets in 4.16.4.

12.4.3* Accessible Cells or Rooms for Persons with Hearing Impairments. In addition to the requirements of 12.4.1, two percent, but not less than one, of general housing or holding cells or rooms equipped with audible emergency warning systems or permanently installed telephones within the cell or room shall comply with the applicable requirements of 12.6.

12.4.4 Medical Care Facilities. Medical care facilities providing physical or medical treatment or care shall comply with the applicable requirements of section 6.1, 6.3 and 6.4, if persons may need assistance in emergencies and the period of stay may exceed 24 hours. Patient bedrooms or cells required to be accessible under 6.1 and 6.3 shall be provided in addition to any medical isolation cells required to be accessible under 12.4.2.

12.4.5 Alterations to Cells or Rooms. (Reserved.)

12.5 Requirements for Accessible Cells or Rooms.

12.5.1 General. Cells or rooms required to be accessible by 12.4 shall comply with 12.5.

12.5.2* Minimum Requirements. Accessible cells or rooms shall be on an accessible route complying with 4.3. Where provided to serve accessible housing or holding cells or rooms, the following elements or spaces shall be accessible and connected by an accessible route.

(1) Doors and Doorways. All doors and doorways on an accessible route shall comply with 4.13.

EXCEPTION: Compliance with 4.13.9, 4.13.10, 4.13.11 and 4.13.12 is not required at entrances, doors, or doorways that are operated only by security personnel or where security requirements prohibit full compliance with these provisions.

(2)* Toilet and Bathing Facilities. At least one toilet facility shall comply with 4.22 and one bathing facility shall comply with 4.23. Privacy screens shall not intrude on the clear floor space required for fixtures and the accessible route.

(3)* Beds. Beds shall have maneuvering space at least 36 in (915 mm) wide along one side. Where more than one bed is provided in a room or cell, the maneuvering space provided at adjacent beds may overlap.

(4) Drinking Fountains and Water Coolers. At least one drinking fountain shall comply with 4.15.

(5) Fixed or Built-in Seating or Tables. Fixed or built-in seating, tables and counters shall comply with 4.32.

(6) Fixed Benches. At least one fixed bench shall be mounted at 17 in to 19 in (430 mm to 485 mm) above the finish floor and provide

12.6 Visible Alarms and Telephones

back support (e.g., attachment to wall). The structural strength of the bench attachments shall comply with 4.26.3.

(7) Storage. Fixed or built-in storage facilities, such as cabinets, shelves, closets, and drawers, shall contain storage space complying with 4.25.

(8) Controls. All controls intended for operation by inmates shall comply with 4.27.

(9) Accommodations for persons with hearing impairments required by 12.4.3 and complying with 12.6 shall be provided in accessible cells or rooms.

12.6 Visible Alarms and Telephones. Where audible emergency warning systems are provided to serve the occupants of holding or housing cells or rooms, visual alarms complying with 4.28.4 shall be provided. Where permanently installed telephones are provided within holding or housing cells or rooms, they shall have volume controls complying with 4.31.5.

EXCEPTION: Visual alarms are not required where inmates or detainees are not allowed independent means of egress.

13. RESIDENTIAL HOUSING. (Reserved).

14. PUBLIC RIGHTS-OF-WAY. (Reserved).

APPENDIX

This Appendix contains *materials of an advisory nature* and provides additional information that should help the reader to understand the minimum requirements of *the guidelines* or to design buildings or facilities for greater accessibility. The paragraph numbers correspond to the sections or paragraphs of the *guideline* to which the material relates and are therefore not consecutive (for example, A4.2.1 contains additional information relevant to 4.2.1). Sections *of the guidelines* for which additional material appears in this Appendix have been indicated by an asterisk. *Nothing in this Appendix shall in any way obviate any obligation to comply with the requirements of the guidelines itself.*

A2.0 General.

A2.2 Equivalent Facilitation. *Specific examples of equivalent facilitation are found in the following sections:*

4.1.6(3)(c)	*Elevators in Alterations*
4.31.9	*TTYs*
7.2	*Sales and Service Counters, Teller Windows, Information Counters*
9.1.4	*Classes of Sleeping Accommodations*
9.2.2(6)(d)	*Requirements for Accessible Units, Sleeping Rooms, and Suites*

A3.0 Miscellaneous Instructions and Definitions.

A3.5 Definitions.

Transient Lodging. *The Department of Justice's policy and rules further define what is covered as transient lodging.*

A4.0 Accessible Elements and Spaces: Scope and Technical Requirements.

A4.1.1 Application.

A4.1.1(3) *Areas Used Only by Employees as Work Areas. Where there are a series of individual work stations of the same type (e.g., laboratories, service counters, ticket booths), five percent, but not less than one, of each type of work station should be constructed so that an individual with disabilities can maneuver within the work stations. Rooms housing individual offices in a typical office building must meet the requirements of the guidelines concerning doors, accessible routes, etc. but do not need to allow for maneuvering space around individual desks. Modifications required to permit maneuvering within the work area may be accomplished as a reasonable accommodation to individual employees with disabilities under title I of the ADA. Consideration should also be given to placing shelves in employee work areas at a convenient height for accessibility or installing commercially available shelving that is adjustable so that reasonable accommodations can be made in the future.*

If work stations are made accessible they should comply with the applicable provisions of 4.

A4.1.2 Accessible Sites and Exterior Facilities: New Construction.

A4.1.2(5)(e) *Valet Parking. Valet parking is not always usable by individuals with disabilities. For instance, an individual may use a type of vehicle controls that render the regular controls inoperable or the driver's seat in a van may be removed. In these situations, another person cannot park the vehicle. It is recommended that some self-parking spaces be provided at valet parking facilities for individuals whose vehicles cannot be parked by another person and that such spaces be located on an accessible route to the entrance of the facility.*

A4.1.3 Accessible Buildings: New Construction.

A4.1.3(5) *Only passenger elevators are covered by the accessibility provisions of 4.10. Materials and equipment hoists, freight elevators not intended for passenger use, dumbwaiters, and construction elevators are not covered by these guidelines. If a building is exempt from the elevator requirement, it is not necessary to provide a platform lift or other means of vertical access in lieu of an elevator.*

Under Exception 4, platform lifts are allowed where existing conditions make it impractical to install a ramp or elevator. Such conditions generally occur where it is essential to provide

A4.1.3 Accessible Buildings: New Construction

access to small raised or lowered areas where space may not be available for a ramp. Examples include, but are not limited to, raised pharmacy platforms, commercial offices raised above a sales floor, or radio and news booths.

A4.1.3(9) *Supervised automatic sprinkler systems have built in signals for monitoring features of the system such as the opening and closing of water control valves, the power supplies for needed pumps, water tank levels, and for indicating conditions that will impair the satisfactory operation of the sprinkler system. Because of these monitoring features, supervised automatic sprinkler systems have a high level of satisfactory performance and response to fire conditions.*

A4.1.3(10) *If an odd number of drinking fountains is provided on a floor, the requirement in 4.1.3(10)(b) may be met by rounding down the odd number to an even number and calculating 50 percent of the even number. When more than one drinking fountain on a floor is required to comply with 4.15, those fountains should be dispersed to allow wheelchair users convenient access. For example, in a large facility such as a convention center that has water fountains at several locations on a floor, the accessible water fountains should be located so that wheelchair users do not have to travel a greater distance than other people to use a drinking fountain.*

A4.1.3(17)(b) *In addition to the requirements of section 4.1.3(17)(b), the installation of additional volume controls is encouraged. Volume controls may be installed on any telephone.*

A4.1.3(19)(a) *Readily removable or folding seating units may be installed in lieu of providing an open space for wheelchair users. Folding seating units are usually two fixed seats that can be easily folded into a fixed center bar to allow for one or two open spaces for wheelchair users when necessary. These units are more easily adapted than removable seats which generally require the seat to be removed in advance by the facility management.*

Either a sign or a marker placed on seating with removable or folding arm rests is required by this section. Consideration should be given for ensuring identification of such seats in a darkened theater. For example, a marker which contrasts (light on dark or dark on light) and which also reflects light could be placed on the side of such seating so as to be visible in a lighted auditorium and also to reflect light from a flashlight.

A4.1.6 Accessible Buildings: Alterations.

A4.1.6(1)(h) *When an entrance is being altered, it is preferable that those entrances being altered be made accessible to the extent feasible.*

A4.1.7 Accessible Buildings: Historic Preservation

A4.1.7(1) *The Department of Justice's regulations implementing titles II and III of the ADA require alternative methods of access where compliance with the special access provisions in 4.1.7(3) would threaten or destroy the historic significance of a qualified historic facility. The requirement for public facilities subject to title II is provided at 28 CFR 35.154(b) and the requirement for private facilities subject to title III is provided at 28 CFR 36.405(b).*

A4.2 Space Allowances and Reach Ranges.

A4.2.1 Wheelchair Passage Width.

(1) Space Requirements for Wheelchairs. Many persons who use wheelchairs need a 30 in (760 mm) clear opening width for doorways, gates, and the like, when the latter are entered head-on. If the *person* is unfamiliar with a building, if competing traffic is heavy, if sudden or frequent movements are needed, or if the wheelchair must be turned at an opening, then greater clear widths are needed. For most situations, the addition of an inch of leeway on either side is sufficient. Thus, a minimum clear width of 32 in (815 mm) will provide adequate clearance. However, when an opening or a restriction in a passageway is more than 24 in (610 mm) long, it is essentially a passageway and must be at least 36 in (915 mm) wide.

(2) Space Requirements for Use of Walking Aids. Although people who use walking aids can maneuver through clear width openings of 32 in (815 mm), they need 36 in (915 mm) wide passageways and walks for comfortable gaits. Crutch tips, often extending down at a wide angle, are a hazard in narrow passageways where they might not be seen by other pedestrians. Thus, the 36 in (915 mm) width provides a safety allowance both for the person *with a disability* and for others.

(3) Space Requirements for Passing. Able-bodied *persons* in winter clothing, walking

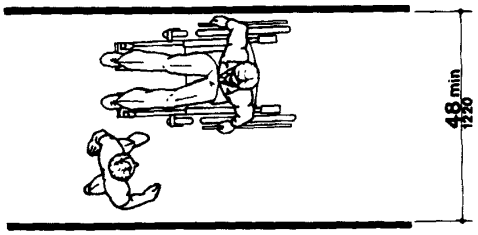

Fig. A1
Minimum Passage Width for One Wheelchair and One Ambulatory Person

A4.31 Telephones.

A4.31.3 Mounting Height. In localities where the dial-tone first system is in operation, calls can be placed at a coin telephone through the operator without inserting coins. The operator button is located at a height of 46 in (1170 mm) if the coin slot of the telephone is at 54 in (1370 mm). A generally available public telephone with a coin slot mounted lower on the equipment would allow universal installation of telephones at a height of 48 in (1220 mm) or less to all operable parts.

A4.31.9(1) *A public text telephone (TTY) may be an integrated text telephone (TTY) pay telephone unit or a conventional portable text telephone (TTY) that is permanently affixed within, or adjacent to, the telephone enclosure. In order to be usable with a pay telephone, a text telephone (TTY) which is not a single integrated text telephone (TTY) pay telephone unit will require a shelf large enough (10 in (255 mm) wide by 10 in (255 mm) deep with a 6 in (150 mm) vertical clearance minimum) to accommodate the device, an electrical outlet, and a power cord.*

A4.31.9(3) *Movable or portable text telephones (TTYs) may be used to provide equivalent facilitation. A text telephone (TTY) should be readily available so that a person using it may access the text telephone (TTY) easily and conveniently. As currently designed, pocket-type text telephones (TTYs) for personal use do not accommodate a wide range of users. Such devices would not be considered substantially equivalent to conventional text telephones (TTYs). However, in the future as technology develops this could change.*

A4.32 *Fixed or Built-in Seating* and Tables.

A4.32.4 Height of Tables or Counters. Different types of work require different table or counter heights for comfort and optimal performance. Light detailed work such as writing requires a table or counter close to elbow height for a standing person. Heavy manual work such as rolling dough requires a counter or table height about 10 in (255 mm) below elbow height for a standing person. This principle of high/low table or counter heights also applies for seated persons; however, the limiting condition for seated manual work is clearance under the table or counter.

Table A1 shows convenient counter heights for seated persons. The great variety of heights for comfort and optimal performance indicates a need for alternatives or a compromise in height if people who stand and people who sit will be using the same counter area.

Table A1
Convenient Heights of Tables and Counters for Seated People[1]

Conditions of Use	Short Women in mm		Tall Men in mm	
Seated in a wheelchair:				
Manual work–				
Desk or removable armrests	26	660	30	760
Fixed, full-size armrests[2]	32[3]	815	32[3]	815
Light, detailed work:				
Desk or removable armrests	29	735	34	865
Fixed, full-size armrests[2]	32[3]	815	34	865
Seated in a 16 in (405-mm) High chair:				
Manual work	26	660	27	685
Light, detailed work	28	710	31	785

[1]All dimensions are based on a work-surface thickness of 1 1/2 in (38 mm) and a clearance of 1 1/2 in (38 mm) between legs and the underside of a work surface.

[2]This type of wheelchair arm does not interfere with the positioning of a wheelchair under a work surface.

[3]This dimension is limited by the height of the armrests: a lower height would be preferable. Some people in this group prefer lower work surfaces, which require positioning the wheelchair back from the edge of the counter.

A4.33 Assembly Areas.

A4.33.2 Size of Wheelchair Locations. Spaces large enough for two wheelchairs allow people who are coming to a performance together to sit together.

A4.33.3 Placement of Wheelchair Locations. The location of wheelchair areas can be planned so that a variety of positions

A4.33.6 Placement of Listening Systems

within the seating area are provided. This will allow choice in viewing and price categories.

Building/life safety codes set minimum distances between rows of fixed seats with consideration of the number of seats in a row, the exit aisle width and arrangement, and the location of exit doors. "Continental" seating, with a greater number of seats per row and a commensurate increase in row spacing and exit doors, facilitates emergency egress for all people and increases ease of access to mid-row seats especially for people who walk with difficulty. Consideration of this positive attribute of "continental" seating should be included along with all other factors in the design of fixed seating areas.

A4.33.6 Placement of Listening Systems. A distance of 50 ft (15 m) allows a person to distinguish performers' facial expressions.

A4.33.7 Types of Listening Systems. *An assistive listening system appropriate for an assembly area for a group of persons or where the specific individuals are not known in advance, such as a playhouse, lecture hall or movie theater, may be different from the system appropriate for a particular individual provided as an auxiliary aid or as part of a reasonable accommodation. The appropriate device for an individual is the type that individual can use, whereas the appropriate system for an assembly area will necessarily be geared toward the "average" or aggregate needs of various individuals. A listening system that can be used from any seat in a seating area is the most flexible way to meet this specification. Earphone jacks with variable volume controls can benefit only people who have slight hearing loss and do not help people who use hearing aids. At the present time, magnetic induction loops are the most feasible type of listening system for people who use hearing aids equipped with "T- coils," but people without hearing aids or those with hearing aids not equipped with inductive pick-ups cannot use them without special receivers. Radio frequency systems can be extremely effective and inexpensive. People without hearing aids can use them, but people with hearing aids need a special receiver to use them as they are presently designed. If hearing aids had a jack to allow a by-pass of microphones, then radio frequency systems would be suitable for people with and without hearing aids. The Department of Justice's regulations implementing titles II and III of the ADA require public entities and public accommodations to provide appropriate auxiliary aids and services to ensure effective communication. See 28 CFR 35.160, 28 CFR 35.164, and 28 CFR 36.303. Where assistive listening systems are used to provide effective communication, the Department of Justice considers it essential that a portion of receivers be compatible with hearing aids.*

Some listening systems may be subject to interference from other equipment and feedback from hearing aids of people who are using the systems. Such interference can be controlled by careful engineering design that anticipates feedback sources in the surrounding area.

Table A2 shows some of the advantages and disadvantages of different types of assistive listening systems. In addition, the Access Board has published a pamphlet on Assistive Listening Systems which lists demonstration centers across the country where technical assistance can be obtained in selecting and installing appropriate systems. The State of New York has also adopted a detailed technical specification which may be useful.

A5.0 Restaurants and Cafeterias.

A5.1 General. *Dining counters (where there is no service) are typically found in small carry-out restaurants, bakeries, or coffee shops and may only be a narrow eating surface attached to a wall. This section requires that where such a dining counter is provided, a portion of the counter shall be at the required accessible height.*

A7.0 Business, Mercantile and Civic.

A7.2(3) Counter or Teller Windows with Partitions. *Methods of facilitating voice communication may include grilles, slats, talk-through baffles, and other devices mounted directly into the partition which users can speak directly into for effective communication. These methods are required to be designed or placed so that they are accessible to a person who is standing or seated. However, if the counter is only used by persons in a seated position, then a method of facilitating communication which is accessible to standing persons would not be necessary.*

Table A2 Summary of Assistive Listening Devices and Systems

Table A2.
Summary of Assistive Listening Devices and Systems

COMPARISON OF LARGE AREA ASSISTIVE LISTENING SYSTEMS

System Description	Advantages	Disadvantages	Typical Applications
FM BROADCAST (40 frequencies available on narrow band transmission systems. Ten frequencies available on wideband transmission systems.) ***Transmitters:*** FM base station or personal transmitter broadcasts signal to listening area. ***Receiver:*** Pocket size with: a) earphone(s), or b) headset, or c) induction neck-loop or silhouette coil coupling to personal hearing aid equipped with telecoil, or d) direct audio input (DAI) to personal hearing aid.	• Highly portable when used with body-worn, personal transmitter. • Easy to install. • May be used separately or integrated with existing PA-systems. • Multiple frequencies allow for use by different groups within same area (e.g., multi-language translation).	• Signal spill-over to adjacent rooms/ listening areas (can prevent interference by using different transmission frequencies for each room/listening area). Choose infrared if privacy is essential. • Receivers required for everyone. Requires administration and maintenance of receivers. • Susceptible to electrical interference when used with induction neck-loop/silhouette (Provision of DAI audio shoes and cords is impractical for public applications). • Some systems more susceptible to radio wave interference and signal drift than others.	Service counters Outdoor guided tours Tour busses Meeting rooms Conference rooms Auditoriums Classrooms Courtrooms Churches and Temples Theaters Museums Theme parks Arenas Sport stadiums Retirement/nursing homes Hospitals
INFRARED LIGHT ***Transmitter:*** Amplifier drives emitter panel(s) covering listening area. ***Receivers:*** Under-chin or Pendant type receiver with: a) headset, or b) earphone(s), or c) induction neck-loop or silhouette coil coupling to personal hearing aid equipped with telecoil, or d) direct audio input (DAI) to personal hearing aid.	• Unlike induction or FM transmission, IR transmission does not travel through walls or other solid surfaces. • Insures confidentiality. • Infrared receivers compatible with most infrared emitters. • May be used separately or integrated with existing PA-systems. • Can be used for multi-language translation (must use special multi-frequency receivers).	• Receivers required for everyone. Requires administration and maintenance of receivers. • Ineffective in direct sunlight. • Careful installation required to insure entire listening area will receive IR signal. • Susceptible to electrical interference when used with induction neckloop/silhouette (Provision of DAI audio shoes and cords is impractical for public applications). • Lifetime of emitters varies with company. • Historical buildings may pose installation problems.	Indoor service counters Meetings requiring confidentiality Meeting rooms Conference rooms Auditoriums Classrooms Courtrooms Churches and Temples Theaters Museums Arenas (indoors only) Sport stadiums (indoors only) Retirement/nursing homes Hospitals

Modified from a chart published by Centrum Sound, Cupertino, California
Cynthia L. Compton, Assistive Devices Center
Department of Audiology and Speech-Language Pathology
Gallaudet University, Washington, DC

Continued on next page

Table A2 Summary of Assistive Listening Devices and Systems

COMPARISON OF LARGE AREA ASSISTIVE LISTENING SYSTEMS			
System Description	**Advantages**	**Disadvantages**	**Typical Applications**
CONVENTIONAL INDUCTION LOOP ***Transmitter***: Amplifier drives an induction loop that surrounds listening area. ***Receivers***: a) Personal hearing aid with telecoil. b) Pocket size induction receiver with earphone or headset. c) Self-contained wand. d) Telecoil inside plastic chassis which looks like a BTE, ITE, or canal hearing aid.	• Requires little, or no administration of receivers, if most people have telecoil-equipped hearing aids. Induction receivers must be used where hearing aids in use are not equipped with telecoils. • Induction receivers are compatible with all loop systems. • Unobtrusive with telecoil hearing aid. • May be used separately or integrated with existing PA-systems. • Portable systems are available for use with small groups of listeners. These portable systems can be stored in a carrying case and set up temporarily, as needed.	• Signal spill-over to adjacent rooms. • Susceptible to electrical interference. • Limited portability unless areas are pre-looped or small, portable system is used (see advantages). • Requires installation of loop wire. Installation may be difficult in pre-existing buildings. Skilled installation essential in historical buildings (and may not be permitted at all). • If listener does not have telecoil-equipped hearing aid then requires administration and maintenance of receivers.	Service counters Ports of transportation Public transportation vehicles Tour busses Meeting rooms Conference rooms Auditoriums Classrooms Courtrooms Churches and Temples Theaters Museums Theme parks Arenas Sport stadiums Retirement/nursing homes Hospitals
3-D LOOP SYSTEM ***Transmitter***: Amplifier drives a 3-D mat that is placed under the carpet of the listening area. ***Receivers***: a) Personal hearing aid with telecoil. b) Pocket size induction receiver with earphone or headset. c) Self-contained wand. d) Telecoil inside plastic chassis which looks like a BTE, ITE, or canal hearing aid.	• Requires little, or no administration of receivers, provided most listeners have telecoil-equipped hearing aids. • Induction receivers are compatible with all loop systems. • May be used separately or integrated with existing PA-systems. • Three-dimensional reception of loop signal regardless of telecoil position. • Reduced signal spillover allows adjacent rooms to be looped without signal interference. • 3-D loop mats must be separated by 6 feet to avoid signal spillover.	• Limited portability (areas may be pre-3-D Loop matted to facilitate portability). • Requires installation of 3-D Loop mats. Installation may be difficult in pre-existing buildings. Skilled installation essential in historical buildings (and may not be permitted at all). • If listener does not have telecoil-equipped hearing aid then requires administration and maintenance of receivers. • Susceptible to electrical interference.	Service counters Ports of Transportation Meeting rooms Conference rooms Auditoriums Class rooms Court rooms Museums Theme Parks Retirement/nursing homes Meetings requiring confidentiality Hospitals

Modified from a chart published by Centrum Sound, Cupertino, California
Cynthia L. Compton, Assistive Devices Center
Department of Audiology and Speech-Language Pathology
Gallaudet University, Washington, DC

A7.2(4) Assistive Listening Systems. *At all sales and service counters, teller windows, box offices, and information kiosks where a physical barrier separates service personnel and customers, it is recommended that at least one permanently installed assistive listening device complying with 4.33 be provided at each location or series. Where assistive listening devices are installed, signage should be provided identifying those stations which are so equipped.*

A7.3 Check-out Aisles. *Section 7.2 refers to counters without aisles; section 7.3 concerns check-out aisles. A counter without an aisle (7.2) can be approached from more than one direction such as in a convenience store. In order to use a check-out aisle (7.3), customers must enter a defined area (an aisle) at a particular point, pay for goods, and exit at a particular point.*

A10.0 Transportation Facilities.

A10.3 Fixed Facilities and Stations.

A10.3.1(7) Route Signs. *One means of making control buttons on fare vending machines usable by persons with vision impairments is to raise them above the surrounding surface. Those activated by a mechanical motion are likely to be more detectable. If farecard vending, collection, and adjustment devices are designed to accommodate farecards having one tactually distinctive corner, then a person who has a vision impairment will insert the card with greater ease. Token collection devices that are designed to accommodate tokens which are perforated can allow a person to distinguish more readily between tokens and common coins. Thoughtful placement of accessible gates and fare vending machines in relation to inaccessible devices will make their use and detection easier for all persons with disabilities.*

A10.4 Airports.

A10.4.1(8) Security Systems. *This provision requires that, at a minimum, an accessible route or path of travel be provided but does not require security equipment or screening devices to be accessible. However, where barriers consist of movable equipment, it is recommended that they comply with the provisions of this section to provide persons with disabilities the ability to travel with the same ease and convenience as other members of the general public.*

A11.0 Judicial, Legislative and Regulatory Facilities.

A11.1.3 Two-Way Communication Systems. *Two-way communication entry systems must provide both voice and visual display so that persons with hearing or speech impairments can utilize the system. This requirement may be met with a device that would allow security personnel to respond to a caller with a light indicating that assistance is on the way. It is important that signage be provided to indicate the meaning of visual signals.*

A11.2.1(2) Assistive Listening Systems. *People who wear hearing aids often need them while using assistive listening systems. The Department of Justice's regulation implementing title II of the ADA requires public entities to provide appropriate auxiliary aids and services where necessary to ensure effective communication. See 28 CFR 35.160 and 28 CFR 35.164. Where assistive listening systems are used to provide effective communication, the Department of Justice considers it essential that a portion of receivers be compatible with hearing aids. Receivers that are not compatible include ear buds, which require removal of hearing aids, and headsets that must be worn over the ear, which can create disruptive interference in the transmission.*

A11.2.3(2)(b) Toilet and Bathing Facilities. *The requirements of 4.22 for toilet rooms and 4.23 for bathrooms, bathing facilities, and shower rooms do not preclude the placement of toilet or bathing fixtures within housing or holding cells or rooms as long as the requirements for toilet rooms and bathrooms, including maneuvering space, are met. In such instances, the maneuvering space required within housing or holding cells or rooms may also serve as the maneuvering space required in toilet rooms by 4.22 or in bathrooms or shower rooms by 4.23.*

A11.2.3(2)(c) Beds. *The height of beds should be 17 in to 19 in (430 mm to 485 mm) measured from the finish floor to the bed surface, including mattresses or bed rolls, to ensure appropriate transfer from wheelchairs and other mobility aids. Where upper bunks are provided, sufficient clearance should be provided between bunks so that the transfer*

A11.2.3(3) Visiting Areas

from wheelchairs to lower bunks is not restricted. Figure A3 provides average human dimensions that should be considered in determining this clearance.

A11.2.3(3) Visiting Areas. *Accessible cubicles or portions of counters may have fixed seats if the required clear floor space is provided within the area defined by the cubicle. Consideration should be given to the placement of grilles, talk-thru baffles, intercoms, telephone handsets or other communication devices so they are usable from both the fixed seat and from the accessible seating area. If an assistive listening system is provided, the needs of the intended user and characteristics of the setting should be considered as described in A4.33.7 and Table A2.*

A11.3 Legislative and Regulatory Facilities. *Legislative facilities include town halls, city council chambers, city or county commissioners' meeting rooms, and State capitols. Regulatory facilities are those which house State and local entities whose functions include regulating, governing, or licensing activities. Section 11.3 applies to rooms where public debate, or discussion of local issues, laws, ordinances, or regulations take place. Examples include, but are not limited to, legislative chambers and hearing rooms, facilities where town, county council or school Board meetings, and housing authority meetings are held, and rooms accommodating licensing or other regulatory Board hearings, adjudicatory administrative hearings (e.g., drivers license suspension hearings) and zoning application and waiver proceedings.*

A11.3.2 *See A11.2.1(2).*

A12.0 Detention and Correctional Facilities.

A12.1 General. *All common use areas serving accessible cells or rooms are required to be accessible. In detention and correctional facilities, common use areas include those areas serving a group of inmates or detainees, including, but not limited to, exercise yards and recreation areas, workshops and areas of instruction or vocational training, counseling centers, cafeterias, commissaries, medical facilities, and any other rooms, spaces, or elements that are made available for the use of a group of inmates or detainees. Detention and correctional facilities also contain areas that may be regarded as common use areas which specifically serve a limited number of housing cells or rooms. Where this occurs, only those common use areas serving accessible cells or rooms would need to be accessible as required by 12.5. For example, several housing cells may be located at and served by a dayroom or recreation room. In this instance, only those dayrooms serving accessible housing cells or rooms would need to be accessible. However, common use areas that do not serve accessible cells but that are used by the public or by employees as work areas are still subject to the requirements for public use areas and employee work areas in section 4.*

A.12.2.1 Entrances. *Persons other than inmates and facility staff, such as counselors and instructors, may have access to secured areas. It is important that evacuation planning address egress for all possible users since a person with a disability might not be able to independently operate doors permitted by this exception.*

A12.3 Visiting Areas. *Accessible cubicles or portions of counters may have fixed seats if the required clear floor space is provided within the area defined by the cubicle. Consideration should be given to the placement of grilles, talk-thru baffles, intercoms, telephone handsets or other communication devices so they are usable from both the fixed seat and from the accessible seating area. If an assistive listening system is provided, the needs of the intended user and characteristics of the setting should be considered as described in A4.33.7 and Table A2.*

A12.4.1 Holding Cells and General Housing Cells or Rooms. *Accessible cells or rooms should be dispersed among different levels of security, housing categories and holding classifications (e.g., male/female and adult/juvenile) to facilitate access. Many detention and correctional facilities are designed so that certain areas (e.g., "shift" areas) can be adapted to serve as different types of housing according to need. For example, a shift area serving as a medium security housing unit might be redesignated for a period of time as a high security housing unit to meet capacity needs. Placement of accessible cells or rooms in shift areas may allow additional flexibility in meeting requirements for dispersion of accessible cells or rooms.*

A12.4.2 Special Holding and Housing Cells or Rooms. *While one of each type of special purpose cell is required to be accessible at a facility, constructing more than one of each type to be accessible will facilitate access at large facilities where cells of each type serve different holding areas or housing units. The requirement for medical isolation cells applies only to those specifically designed for medical isolation. Cells or rooms primarily designed for other purposes, such as general housing or medical care, are subject to the requirements in 12.4.1 or 12.4.4, respectively. Medical isolation cells required to be accessible by 12.4.2 shall not be counted as part of the minimum number of patient bedrooms or cells required to be accessible in 12.4.4. Thus, if a medical care facility has both types of cells, at least one medical isolation cell must be accessible under 12.4.2 in addition to the number of patient bedrooms or cells required to be accessible by 12.4.4. While only one medical isolation cell per facility is required to be accessible, it is recommended that consideration be given to ensuring the accessibility of all medical isolation cells.*

A12.4.3 Accessible Cells or Rooms for Persons with Hearing Impairments. *Many correctional facilities do not provide permanently installed telephones or alarms within individual housing cells. Such facilities are not subject to the requirements of 12.4.3. However, some categories of housing, such as minimum security prisons, may be equipped with such devices. The minimum two percent is based on the number of cells or rooms equipped with these devices and not on the total number of cells or rooms in the facility. In addition, this requirement applies only where permanently installed telephones or alarms are provided within individual cells. Permanently installed telephones and alarms located in common use areas, such as dayrooms, are required to be accessible according to the requirements for common use areas. See 12.1.*

A12.5.2 Minimum Requirements. *The requirements of this section apply to elements provided within housing or holding cells or rooms. Elements located outside cells or rooms for common use, such as in a day room, are subject to 12.1 and its application of requirements in section 4. For example, if a drinking fountain is provided within an accessible housing or holding cell, at least one must be wheelchair accessible under section 12.5.2(4). Drinking fountains located outside the cells in common use areas serving accessible cells or in public use areas, are subject to the requirements of 4.1.3(10).*

A12.5.2(2) Toilet and Bathing Facilities. *The requirements of 4.22 for toilet rooms and 4.23 for bathrooms, bathing facilities, and shower rooms do not preclude the placement of toilet or bathing fixtures within housing or holding cells or rooms as long as the requirements for toilet rooms and bathrooms, including maneuvering ce, are met. In such instances, the maneuvering space required within housing or holding cells or rooms may also serve as the maneuvering space required in toilet rooms by 4.22 or in bathrooms or shower rooms by 4.23.*

A12.5.2(3) Beds. *Since beds may not always be fixed, a minimum number of accessible beds has not been specified. In barracks-style rooms with many beds, it is recommended that the scoping requirement for housing or holding cells or rooms (2 percent) also be applied to the number of beds in accessible cells or rooms.*

The height of beds should be 17 to 19 in (430 mm to 485 mm) measured from the finish floor to the bed surface, including mattresses or bed rolls, to ensure appropriate transfer from wheelchairs and other mobility aids. Where upper bunks are provided, sufficient clearance must be provided between bunks so that the transfer from wheelchairs to lower bunks is not restricted. Figure A3 provides standard human dimensions that should be considered in determining this clearance.

[FR Doc. 98–615 Filed 1–12–98; 8:45 am]
BILLING CODE 8150–01–C